United States
Environmental Protection
Agency

Office of Air Quality
Planning and Standards
Research Triangle Park NC 27711

EPA-450/3-78-111
November 1978

Air

Screening Study on Feasibility of Standards of Performance for Two Wood Pulping Processes

EPA-450/3-78-111

Screening Study on Feasibility of Standards of Performance for Two Wood Pulping Processes

by

C.M. Thompson, W.C. Micheletti, and J.C. Terry

Radian Corporation
Austin, Texas 78766

Contract No. 68-02-2608

EPA Project Officer: George B. Crane

Emission Standards and Engineering Division

Prepared for

U.S. ENVIRONMENTAL PROTECTION AGENCY
Office of Air, Noise, and Radiation
Office of Air Quality Planning and Standards
Research Triangle Park, North Carolina 27711

November 1978

This report has been reviewed by the Emission Standards and Engineering Division of the Office of Air Quality Planning and Standards, EPA, and approved for publication. Approval does not signify that the contents necessarily reflect the views and policies of the Environmental Protection Agency, nor does mention of trade names or commercial products constitute endorsement or recommendation for use. Copies of this report are available through the Library Services Office (MD-35), U.S. Environmental Protection Agency, Research Triangle Park, N.C. 27711; or, for a fee, from the National Technical Information Services, 5285 Port Royal Road, Springfield, Va. 22161.

Publication No. EPA-450/3-78-111

ACKNOWLEDGEMENTS

Radian would like to express sincere appreciation to Mr. George Crane, EPA Project Officer, for his helpful guidance and to all government and industrial personnel contacted for their kind cooperation. A special note of thanks is extended to those companies which arranged for mill visits:

Boise Cascade Corporation	Salem, Oregon
Longview Fibre Company	Longview, Washington
Menasha Corporation	North Bend, Oregon
Publishers Paper Company	Oregon City, Oregon
Weyerhaeuser Company	Cosmopolis, Washington

Their genuine interest and continual cooperation was an invaluable aid in preparing this screening study.

ABSTRACT

This report is a screening study for the sulfite and neutral sulfite semichemical (NSSC) wood pulping processes. The screening study was prepared by Radian Corporation for the Emissions Standards and Engineering Division of the U. S. Environmental Protection Agency. The purpose of the screening study is to develop background information on both pulping processes and to advise on the feasibility and need for standards of performance for either or both of them.

This report provides a general industry description and discusses in detail the operation of both wood pulping processes. Potential emission sources are identified, as well as available methods of emission control. In addition, existing applicable regulations are summarized, national emissions are estimated, and specific analytical methods are discussed.

TABLE OF CONTENTS

Section		Page
	ACKNOWLEDGEMENTS	iii
	ABSTRACT	iv
1.0	EXECUTIVE SUMMARY	1-1
	1.1 Description of Processes Studied	1-1
	1.2 Scope of Work	1-2
	1.3 Results	1-5
2.0	CONCLUSIONS AND RECOMMENDATIONS	2-1
	2.1 Conclusions	2-1
	2.2 Recommendations	2-3
3.0	DESCRIPTION OF THE WOOD PULPING INDUSTRY	3-1
	3.1 Description of Sulfite and NSSC Pulping	3-3
	3.2 The Sulfite Pulping Industry	3-5
	3.3 The Semichemical Pulping Industry	3-17
4.0	PROCESS DESCRIPTION AND EMISSIONS SOURCES	4-1
	4.1 Sulfite Process	4-1
	4.2 Neutral Sulfite Semichemical (NSSC) Process	4-20
5.0	EMISSION CONTROL SYSTEMS	5-1
	5-1 Control of Sulfur Dioxide Emissions	5-1
	5-2 Control of Particulate Emissions	5-8
	5-3 Candidate Best Control Systems	5-9
6.0	EXISTING EMISSIONS REGULATIONS	6-1
	6.1 Emissions Regulations for Sulfite Pulping	6-1
	6.2 Emissions Regulations for NSSC Pulping	6-2
	6.3 Additional Relevant Regulations	6-3
7.0	ESTIMATED EMISSIONS	
	7.1 Emission Test Data	7-1
	7.2 Emission Factors	7-5
	7.3 Estimation of Nationwide Emissions	7-23
	7.4 Model IV Calculations	7-27

TABLE OF CONTENTS (continued)

Section | Page

8.0 SAMPLING AND ANALYSIS FOR AIR EMISSIONS FROM SULFITE AND NSSC PULP MILLS..... 8-1
8.1 Measurement of Volumetric Gas Flow Rates..... 8-2
8.2 Sample Handling and Conditioning..... 8-3
8.3 Concentration Measurements..... 8-5

APPENDIX A - LIST OF MILLS PRODUCING WOOD PULP BY THE SULFITE PROCESSES AND MILLS PRODUCING SEMICHEMICAL PULP..... A-1

APPENDIX B - SULFITE PULPING MODEL IV CALCULATION..... B-1

LIST OF TABLES

Table		Page
3-1	1978 CAPACITY FOR WOOD PULP ACCORDING TO GRADE	3-4
3-2	CHARACTERISTICS OF MILLS PRODUCING SULFITE PULP	3-9
3-3	CHARACTERISTICS OF MILLS PRODUCING SEMICHEMICAL PULP AND ASSOCIATED WITH KRAFT MILLS	3-23
3-4	CHARACTERISTICS OF MILLS IN THE UNITED STATES PRODUCING SEMICHEMICAL PULP AND NOT ASSOCIATED WITH KRAFT MILLS	3-28
5-1	SULFITE MILLS WITH CANDIDATE BEST CONTROL SYSTEMS	5-10
6-1	STATE IMPLEMENTATION PLANS (SIP) FOR SULFUR EMISSIONS	6-4
6-2	STATE IMPLEMENTATION PLANS (SIP) FOR PARTICULATE EMISSIONS	6-10
6-3	CALIFORNIA SULFUR DIOXIDE EMISSION REGULATIONS	6-22
6-4	CALIFORNIA PARTICULATE EMISSION REGULATIONS	6-23
7-1	SUMMARY OF UNCONTROLLED AND CONTROLLED EMISSION FACTOR DATA AND RECOVERY/CONTROL METHODS FOR SULFITE PULPING, ACID PLANT EMISSIONS	7-6
7-2	SUMMARY OF UNCONTROLLED AND CONTROLLED EMISSION FACTOR DATA AND RECOVERY/CONTROL METHODS FOR SULFITE PULPING, DIGESTER DISCHARGE SYSTEM EMISSIONS	7-7
7-3	SUMMARY OF UNCONTROLLED AND CONTROLLED EMISSION FACTOR DATA AND RECOVERY/CONTROL METHODS FOR SULFITE PULPING, RECOVERY SYSTEM EMISSIONS	7-11
7-4	AVERAGE UNCONTROLLED AND CONTROLLED EMISSION FACTORS FOR SULFITE PULPING	7-14
7-5	SUMMARY OF UNCONTROLLED AND CONTROLLED EMISSION FACTOR DATA AND CONTROL METHODS FOR NSSC PULPING	7-15
7-6	ESTIMATED NATIONWIDE EMISSIONS	7-22

LIST OF FIGURES

Figure		Page
3-1	The pH of solutions containing various combinations of sulfite, bisulfite, and sulfurous acid	3-7
3-2	Regional distribution of operating sulfite pulp mills	3-14
3-3	Trends in capacities and production rates for sulfite paper grade pulps and dissolving pulps	3-16
3-4	Regional distribution of semichemical pulp mills associated with kraft pulp mills	3-26
3-5	Regional distribution of operating semichemical pulp mills not associated with kraft pulp mills	3-31
3-6	Trends in capacity and production of semichemical pulp	3-33
4-1	Generalized sulfite process	4-3
4-2	Magnesium base recovery system	4-11
4-3	Ammonium base recovery system	4-14
4-4	Stora sodium base recovery system	4-16
4-5	Liquor preparation system	4-18
4-6	Generalized neutral sulfite semichemical (NSSC) process	4-21

1.0 EXECUTIVE SUMMARY

This report represents the results of a screening study which considered the feasibility and need for developing new source performance standards for two wood pulping processes. The wood pulping processes considered were the sulfite process and the neutral sulfite semichemical (NSSC) process. The sulfite process is actually a group of related processes. This chapter provides a brief description of the screening study and lists the major results of the study.

1.1 DESCRIPTION OF PROCESSES STUDIED

The sulfite processes account for about 5.5 percent of all wood pulp produced in the United States. The sulfite processes are all descendants of the process which is now referred to as the calcium acid sulfite process. This process was originally referred to simply as the sulfite process. It was the dominant commercial process used to produce wood pulp by chemical means from about 1890 to the mid-1920's.

Other sulfite processes differ from the original process by the use of different bases (magnesium, ammonia, or sodium) in the cooking liquor. Use of these other, "soluble," bases makes it possible to produce wood pulp using a less acidic cooking liquor than that required when calcium is the base. Pulping processes using the less acidic cooking liquor are referred to as "bisulfite" processes. Description of which sulfite process is

being used at a particular mill requires specification of both base and pH range (acid sulfite or bisulfite).

Many grades of paper and other wood products (rayon, cellulose acetate) can be made from pulp produced by the sulfite processes. But, the share of the wood pulp market belonging to pulp produced by the sulfite processes has steadily declined since commercial introduction of the kraft process.

The NSSC process accounts for about 5.9 percent of all wood pulp produced in the United States. The NSSC process is a much newer process than the calcium acid sulfite process. The NSSC process was introduced in the late 1920's and its commercial development has paralleled that of the kraft process. The market share is limited by the demand for the relatively coarse grade of pulp usually produced. Most semichemical pulp is used to make corrugating medium. Hardwoods, not suitable for pulping by other processes, sawdust, wood shavings and even bark and twigs are used as raw materials for the NSSC process. There is a current trend for NSSC pulping to be replaced by other semichemical pulping processes. The driving force behind this change is the difficulty in disposing of the spent NSSC liquor in an environmentally acceptable manner.

1.2 SCOPE OF WORK

The paragraphs below describe the objectives of this screening study, the approach taken to reach the objectives and the limitations of the study.

1.2.1 Objectives

The objective of this project was to develop information required to advise on the feasibility and need for standards of performance for two wood pulping processes. The processes considered were the sulfite process and the neutral sulfite semichemical (NSSC) process.

1.2.2 Approach

Background information relating to the feasibility and need for standards of performance for the two wood pulping processes was collected and is organized in this report.

Information was collected from the following sources;

- the open literature,
- persons within the EPA,
- persons in state agencies in Washington, Oregon and Wisconsin,
- The National Council of the Paper Industry for Air and Stream Improvement (NCASI),
- The American Paper Institute,
- The Northwest Pulp and Paper Association, and
- persons at individual mills.

Reports of all contacts and copies of all correspondence are included in the docket for this report. Contacts included visits to five operating pulp mills. Pertinent references not in the open literature and other relevant information are included in the docket prepared with this report.

The sections which follow provide descriptions of the industry, the processes and applicable control methods. Emission test data is described and presented. Emission factors are calculated for a number of systems in sulfite mills and NSSC mills. Nationwide emissions are calculated for current conditions, for continued operation under current regulations, and for operation under possible new source performance standards more strict than current standards. In addition, sampling and analytical methods applicable to these processes are described.

1.2.3 Limitations

This study is limited to atmospheric emissions of pollutants from the sulfite processes and the neutral sulfite semichemical process. Emissions from power boilers associated with these mills are specifically excluded. Possible emissions from bleaching operations are not included in the study. Bleach plant emissions are generally considered to be small.

The screening study concentrates on emissions of sulfur dioxide and particulates. These are reported to be the major pollutants associated with these processes. Emissions of nitrogen oxides from recovery furnaces burning ammonia base spent sulfite liquor are discussed briefly. Possible emissions of organic pollutants are not considered and no information was found concerning these emissions.

The duration of this screening study was limited to four months. The level of effort was limited to a nominal 1500 manhours. Within these time constraints it was necessary to rely on secondary sources for much of the information required. In many cases information from one source would conflict with that from another source. In some cases the conflicting information is reported with the statement that a conflict exists. In other cases the information considered to be most reliable was reported. A number of errors were detected in the information obtained and although efforts were made to correct as many as possible, inaccuracies undoubtedly exist in the information included in this report.

Another limitation involves the statistical categories used by the industry for reporting pulp mill capacities and production rates. The

statistical categories do not match the processes under consideration. Estimates had to be made as to what proportions of the pulp included in the various statistical categories were produced by the processes under consideration.

1.3 RESULTS

The results of the screening study are listed below.

- Although the sulfite and NSSC processes are in widespread commercial use, each mill is unique in its specific application of the processes.
- Both the sulfite and NSSC processes are declining industries with regard to capacity and production.
- It is not possible to document the rate of decline of pulp production by the sulfite process. Dissolving pulp is produced using the sulfite process and using the kraft process. Statistical sources which report production and capacities do not report the type of process used to manufacture dissolving pulp.
- No firm statement can be documented about the rate of decline of NSSC pulping in the U. S. There seems to be a trend to replace NSSC liquor by alternate cooking liquors to produce semichemical pulp. Statistics relating to production and capacity for production of semichemical pulp give only the total amount of semichemical pulp produced; no information is provided on the process used to produce the pulp.

- Some sources of information fail to distinguish clearly between sulfite mills using cooking liquors with pH below 7 and neutral sulfite semichemical mills.
- The major atmospheric pollutants emitted from the sulfite process are sulfur dioxide and particulates. The primary emission sources are the digesters, the cooking liquor preparation system, and the recovery system. Depending on the cooking liquor base, minor amounts of ammonia, nitrogen oxides, and reduced sulfur species may also be emitted.
- The major atmospheric pollutant from the NSSC process, as carried out at mills which are not associated with kraft mills, is particulates. The primary emission source is the recovery system. Some recovery systems may emit significant amounts of sulfur dioxide. Other types of recovery systems may emit reduced sulfur species.
- The only separately identifiable emission sources for NSSC mills which are integrated with kraft mills are the liquor preparation system and the digester. For mills which prepare cooking liquor from sulfur and sodium carbonate (or sodium hydroxide), sulfur dioxide emissions from these sources are very low. No emission data were obtained for mills which use green liquor to prepare NSSC liquor.

- Incremental emissions from kraft recovery boilers, which are the result of adding spent NSSC liquor to kraft black liquor before recovery, are covered by existing kraft mill regulations.
- Only a few states have implemented regulations specifically designed to limit emissions from the sulfite or NSSC process. Regulations for the NSSC process are usually incorporated with regulations for the kraft wood pulping process. Many states may attempt to regulate the sulfite and NSSC processes as generalized industrial sources. The degree of enforcement is unknown.

2.0 CONCLUSIONS AND RECOMMENDATIONS

2.1 CONCLUSIONS

The conclusions reached as a result of this screening study are outlined in the following two subsections.

2.1.1 Sulfite Process

Based on background information for the sulfite wood pulping process, the following conclusions have been developed.

- The declining capacities and productions of the sulfite processes will continue as other wood pulping processes are improved or developed to produce comparable grades of pulp from similar types of wood. Stringent environmental regulations, especially those associated with water effluents, are accelerating this trend.
- Based on Model IV calculations, estimated uncontrolled SO_2 emissions from the digester and the cooking liquor preparation system are 29.0 and 2.5 kg/Mg of pulp (58.0 and 5.0 lb/ton), respectively. For a mill operating under NSPS, corresponding SO_2 emission limits would be 0.26 kg/Mg of pulp (0.52 lb/ton) for both the digester and the cooking liquor preparation system.

- The recovery system emits SO_2 and particulates. Based on Model IV calculations, estimated uncontrolled emissions from this unit in a typical sulfite mill are 9.36 kg SO_2/Mg of pulp (18.7 lb/ton) and 1.8 kg particulates/Mg of pulp (3.6 lb/ton). For a mill operating under NSPS, the SO_2 emission limit would be 1.22 kg/Mg (2.44 lb/ton). (Note: These emission figures represent composite data for four types of cooking liquor and should not be used without consulting the Model IV calculation in Appendix B.)
- Those states which have regulations for the sulfite process have achieved a reasonable level of emissions control. For those states which do not have regulations, not enough data exist to determine the current level of emissions control.

2.1.2 NSSC Process

Based on background information for the NSSC wood pulping process, the following conclusions have been developed.

- The production of semichemical pulp is expected to increase slightly over the next few years. Even though the NSSC process is probably the "best" way to produce semichemical pulp from a process standpoint, environmental restrictions are creating a trend toward alternate processes. The rate of decline of NSSC pulping is very difficult to define because semichemical pulp statistics do not differentiate among the various semichemical processes.

- Additional work will be required to estimate atmospheric emissions or to determine the effect of state regulations. At present, emission data for the NSSC process are too sparse.

2.2 RECOMMENDATIONS

Recommendations developed as a result of this screening study are based on the criteria discussed below.

- Industry Growth - Based on historical data and other available statistics, will the capacity and production increase or decrease through 1983? Will new technology result in substantial expansions or modifications through 1983? Will obsolete equipment be replaced?
- Status as a Major Source - Will the construction of a new mill or the expansion or modification of an existing mill result in the atmospheric emission of any criteria pollutant equal to or greater than 91 Mg per year (100 tons per year)?
- Degree of State Regulation and Enforcement - What portion of the total U. S. capacity is operating under state regulations? Are the state regulations enforced?
- Relocation Potential - Will the industry relocate in another state to avoid strict emission regulations in a particular state?
- Impact of NSPS - Based on Model IV calculations, what will be the reduction in national emissions (T_S - T_N) resulting from NSPS?

- Health and Welfare - Will implementation of NSPS improve ambient air quality as reflected by atmospheric modeling?

2.2.1 Sulfite Process

Based on the data compiled during this study, the sulfite wood pulping process does not merit further consideration for the development of new source performance standards. The reasons for this recommendation are based on a review of the criteria as discussed below.

- Growth - Overall production of wood pulp by the sulfite process will decline over the next five years. During that period only one new sulfite mill is being considered, but its construction appears uncertain. No breakthroughs in sulfite pulping technology are anticipated.
- Major Source - If a new, 182 Mg/day (200 ton/day) sulfite mill was constructed, it would be classified as a major source. Uncontrolled atmospheric emissions would be 6.77 Gg SO_2/yr (1200 ton/yr) and 298 Mg particulates/yr (328 ton/yr). As previously discussed, the likelihood of a new sulfite mill is doubtful.
- Regulations - At present, a large portion of the U. S. sulfite pulp capacity is operating under relatively strict regulations. Almost 71% is operating under state SO_2 emission regulations. The result is a reduction of almost 73% over uncontrolled SO_2 emissions. In addition, 64% is operating under state particulate emission regulations. The result

is a reduction of approximately 1% over uncontrolled emissions. Most state regulations closely approximate the emission limits for best available control technology and enforcement is strict.

- Relocation - The sulfite industry is not given to relocation. In Alaska, Oregon, and Washington, where strict emission regulations have been implemented, a few mills have closed, but most have made modifications in order to be in compliance with the state regulations.
- Impact - The impact of New Source Performance Standards as estimated by a Model IV calculation is much lower than originally predicted by TRC in 1975. According to the revised Model IV calculation, sulfite wood pulping places in the lower one third of all industries when ranked according to impact, $(T_S - T_N)$, for both SO_2 and particulate emissions reduction.
- Only one state, Oregon, has done any ambient air quality modeling for atmospheric emissions from sulfite pulp mills. The Oregon emission regulations are designed to achieve a specified ambient air quality based on this modeling. The extent and accuracy of this modeling is unknown.

2.2 NSSC PROCESS

Additional data is needed to determine whether the development of new source performance standards for the NSSC wood pulping industry is

justified. The necessary information for this decision is either unavailable or incomplete. Therefore, additional effort is recommended in the following areas.

- Industry Capacity and Productions - Detailed NSSC data is required as opposed to the general semichemical statistics that are currently available. At present, it is impossible to differentiate between NSSC and semichemical data without direct contact with each semichemical mill.
- Emission Data - Well documented emission data for the following process units and pollutants are needed:
  1) Digesters: SO_2
  2) Cooking liquor preparation systems: SO_2
  3) Recovery systems: SO_2, reduced sulfur species (H_2S, etc.), and particulates.
- State Regulations and Enforcement - Regulatory information is needed to determine the extent of regulations, particularly in regard to NSSC mills associated with kraft mills, and the degree of enforcement being exercised.

3.0 DESCRIPTION OF THE WOOD PULPING INDUSTRY

The annual capacity of the wood pulping industry in the United States in 1978 is reported by the American Paper Institute[1] to be 50,676 Gg (55,861,000 tons). Several grades of pulp are included in this total capacity. Several processes are used to produce this pulp. Three organizations (the United States Department of Commerce Bureau of the Census, the United States International Trade Commission and the American Paper Institute) publish statistical information related to wood pulp capacity and production in the United States. In each case the statistical data are presented by grades of wood pulp produced. The major grades of wood pulp recognized by these organizations are:

- dissolving and alpha,
- sulfite paper grades,
- sulfate and soda paper grades,
- semichemical, and
- mechanical.

In some cases statistical data are reported for categories within the major grades such as bleached and unbleached sulfite and bleached and unbleached sulfate pulp.

Processes which produce dissolving and special alpha pulp, sulfite paper grade pulp, and sulfate paper grade pulp are called chemical pulping processes. In these processes the lignin which holds the cellulose fibers

together is dissolved by chemical means. The material is essentially completely pulped and requires very little if any mechanical action to complete the pulping process. Dissolving pulps require additional chemical treatment. The yield of pulp for the chemical processes is usually about 30 to 50 percent of the wood fed to the digester. The yield of some chemical pulping processes may be as high as 55 or 60 percent. The portion of the wood not recovered as pulp appears largely as dissolved organic materials in the spent cooking liquor.

In the production of semichemical pulp, the pulping process is only partially carried out in the digester. The remainder of the pulping operation is carried out mechanically using presses and disc refiners. The yield of semichemical pulps is usually in the range 68 to 85%.

Mechanical pulps are produced primarily by mechanical action. Groundwood pulp, used in newsprint is produced entirely by mechanical action. The yield is usually about 95 percent of the wood fed to the grinders. Several other processes produce pulp primarily by mechanical action, although partial pulping may be accomplished by the action of heat or chemicals. These processes typically have yields above 85 percent. Pulp grades produced by these processes include thermomechanical, chemimechanical, defibrated and exploded pulps.

The current program is concerned with estimation of air emissions from the sulfite process and the NSSC process. These processes are used to produce dissolving and special alpha pulp, sulfite paper grade pulp and semichemical pulp. However, some dissolving pulp is produced using the sulfate (kraft) process and some semichemical pulp is produced using processes other than the NSSC process.

Dissolving and special alpha pulps are generally used as chemical feedstocks rather than as raw materials for the manufacture of paper related products. Photographic film, cellulose acetate and rayon are made from these pulps. Sulfite paper grade pulps are used to make a variety of paper products including tissue, fine writing paper, and as part of the furnish for newsprint. Most semichemical pulp is used to produce corrugating medium. However, some semichemical pulp is used to produce specialty products such as glassine paper and as part of the furnish for a variety of paper grades.

3.1 DESCRIPTION OF SULFITE AND NSSC PULPING

The current program has considered that group of wood pulping processes which has the common feature of having the bisulfite ion present in the cooking liquor. These processes have been referred to as the sulfite process and the neutral sulfite semichemical (NSSC) process.

The sulfite process is in fact a group of related processes. These processes are usually used to produce chemical pulps. As indicated in the previous section, paper grade sulfite pulps and some dissolving and special alpha pulps are produced by these processes. In addition, one plant is reported to use an acidic (pH 4) sulfite process occasionally to produce semichemical pulp.[1,2,3,10]

Historically, the neutral sulfite semichemical (NSSC) process was the dominant process used to produce semichemical pulp. Most semichemical pulp is still produced using this process. However, other processes produce a significant fraction of the semichemical pulp now made.

Table 3-1 gives the capacity for the various grades of pulp produced in the United States. The processes under consideration produce a relatively

Table 3-1. 1978 CAPACITY FOR WOOD PULP ACCORDING TO GRADE[a]

	Capacity		
	Gg/yr	Thousands of tons/yr	Percent
Dissolving and special alpha	1,416	1,561	2.8
Sulfite paper grades	2,045	2,254	4.0
Sulfate and soda paper grades	34,650	38,195	68.6
Semichemical	4,265	4,701	8.4
Mechanical	8,106	8,935	16.0
Screenings	65	72	0.1
Total	50,675	55,717	99.9

[a]American Paper Institute. Paper, Paperboard, Woodpulp, Fiber Consumption, 1976-1979 Capacity with Additional Data for 1980-1982. New York. Revised data, March 13, 1978.

small fraction of the total pulp produced in the United States. Even if all dissolving pulp were produced by sulfite processes and all semichemical pulp by the NSSC process, these processes would account for only slightly more than 15% of the wood pulp produced in the United States.

3.2 THE SULFITE PULPING INDUSTRY

This section describes several features of the sulfite wood pulping processes. Cooking liquors used by the industry are described. The geographical distribution of plants is presented. Production history and projected production trends are presented within the limitations of available data. More details regarding the processes, including descriptions of processes, recovery systems, process emissions, and emission control systems are given in later sections.

3.2.1 Cooking Liquors Used in the Sulfite Processes

In the nomenclature commonly employed in the wood pulping industry the general term sulfite process refers to any one of several processes which use cooking liquors that are acidic and contain bisulfite ion. From 1890 to 1950 the only commercially important process which fit this description used a cooking liquor prepared from sulfurous acid and limestone. A large excess of sulfurous acid was required to keep the calcium ion in solution. The pH of the cooking liquor was below 2. It contained as much as 8 percent sulfur dioxide by weight. This process was commonly called the sulfite process.

During the 1950's several modifications of this process were introduced on a commercial scale. The modifications included using other, "soluble", bases instead of calcium. The other bases used were magnesium, sodium and ammonia. The use of these other bases also made it possible

to use a cooking liquor with a higher pH (usually in the range pH 3-4).

As the nomenclature has evolved the term acid sulfite process is now applied to those processes using a cooking liquor with a pH less than 2 and the term bisulfite process is now applied to those processes operating in the pH range 2-6.[3] To specify a sulfite process, both pH range and base need to be stated.

There are seven possible sulfite processes: acid sulfite pulping using calcium, magnesium, sodium or ammonia and bisulfite pulping using magnesium sodium, or ammonia. Six of these possible processes are actually being used by at least one plant in the United States in 1978. Within the limits of the information collected for this screening survey, no plant has been identified in the United States which practices bisulfite pulping using sodium as the base.

Figure 3-1 illustrates the pH of solutions containing various combinations of sulfite ion ($SO_3^{=}$), bisulfite ion (HSO_3^{-}), and sulfurous acid (H_2SO_3) in the presence of sodium and magnesium ions. This figure shows that acid sulfite solutions contain approximately equal amounts of bisulfite ions and sulfurous acid and are highly buffered. The sulfur in bisulfite cooking liquors is primarily in the form of bisulfite ion with relatively low concentrations of sulfurous acid or sulfite ion present. Since buffering requires the presence of two species (H_2SO_3, HSO_3^{-} or HSO_3^{-}, $SO_3^{=}$) in approximately equal concentrations, the true bisulfite cooking liquors are not buffered.

Pulping processes using magnesium or sodium as the base recover the chemical values of the base for economic reasons. The recovery systems involve combustion of spent cooking liquor. Sulfur and heat values in the liquor are recovered in addition to the base. Spent sulfite liquors

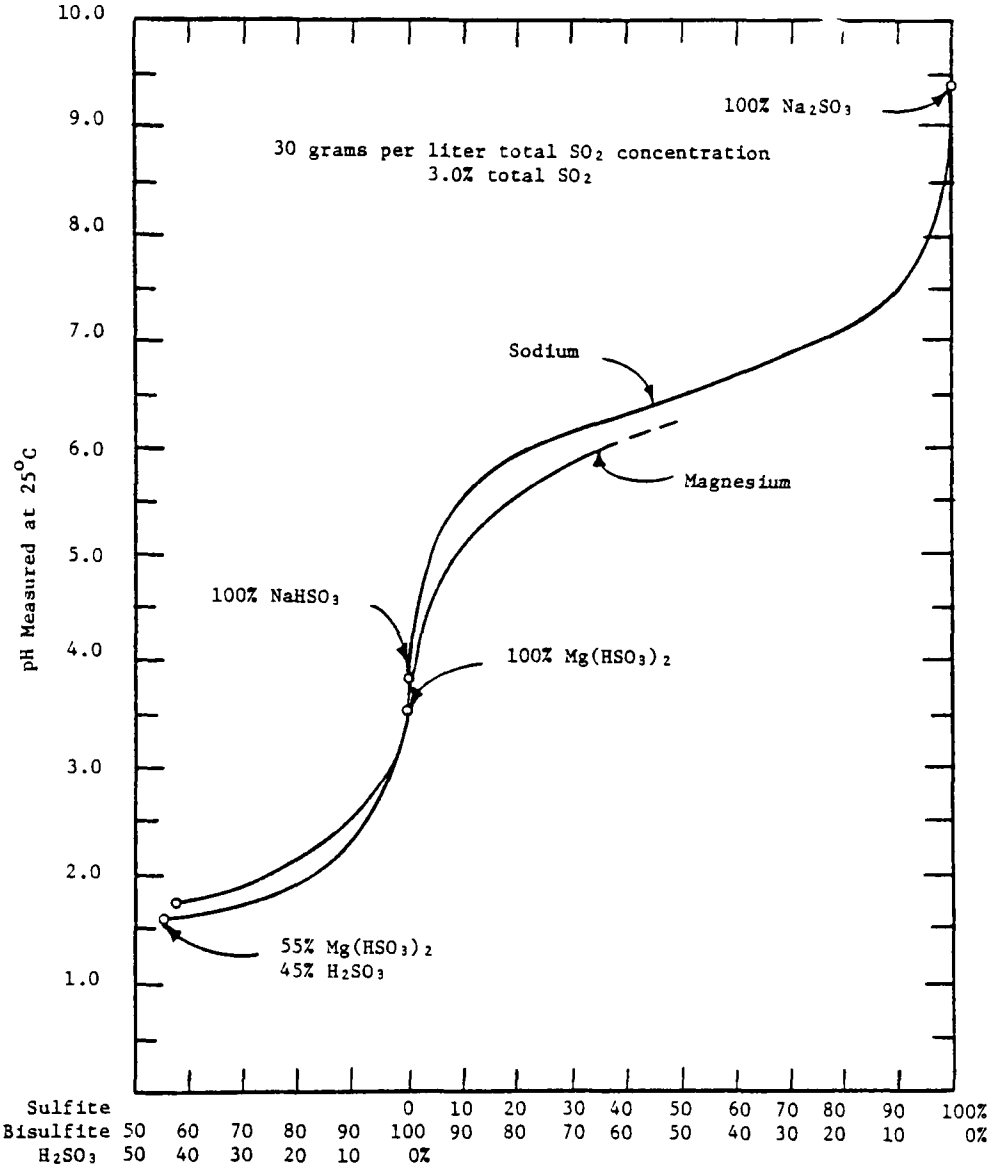

Figure 3-1. The pH of solutions containing various combinations of sulfite, bisulfite, and sulfurous acid.

Source: Tomlinson, G. H., II. Pulp. In: Kirk-Othmer Encyclopedia of Chemical Technology, Vol. 16, Standen, A. (ed.) New York, John Wiley and Sons, Inc., 1968. p. 713.
Used with permission of John Wiley and Sons, Inc.

which use ammonia as the base are usually incinerated. Heat is recovered for economic reasons and sulfur is recovered for environmental reasons. Ammonia is not recovered.

No practical means has been found for recovering either calcium or sulfur from calcium base spent sulfite liquor. Spent sulfite liquor from mills using acid sulfite cooks with either calcium or ammonia as the base can be evaporated and used for road binding material. These spent sulfite liquors can also be neutralized and used to grow Torula yeast or can be processed to make a variety of products including surface active agents, fertilizers, animal feeds, ethanol, and vanillin.

Air emissions from a sulfite mill depend on the process used, the recovery system used, if any, how efficiently the recovery system operates, the type of air emission control equipment and how efficiently the air emission control equipment is operated.

3.2.2 Characteristics of Sulfite Mills in the United States

Table 3-2 lists the location, capacity and process used for sulfite mills currently operating in the United States. Available information about recovery furnaces is listed. In many cases the information about recovery furnaces is meager: only the name of the manufacturer or the fact there is a furnace may be reported. The addresses and telephone numbers of these mills are given in Appendix A (Table A-1). Table A-1 also lists three pulp mills which are listed as idle and two pulp mills which were closed permanently in the spring of 1978.

The Crown Zellerbach mill in Lebanon, Oregon is included in Tables 3-2 and A-1 because at least part of its capacity is used to produce sulfite pulp. The pH ranges used at this mill correspond with those normally associated with sulfite pulping. This mill is reported to produce semi-chemical pulp in addition to sulfite pulp.[4]

Table 3-2. CHARACTERISTICS OF MILLS PRODUCING SULFITE PULP

State	City	Company	Capacity[a] Mg/day	Base	Acid Sulfite Or Bisultite	Recovery Furnaces
Alaska	Ketchikan	Ketchikan Pulp Co.	558	Mg[e,f]	Acid Sulfite[f]	4 B&W[b]
Alaska	Sitka	Alaska Lumber & Pulp Co. Inc.	544	Mg[f]	Acid Sulfite[f]	3 B&W[b]
Florida	Fernandina Beach	ITT Rayonier Inc.	408	NH_3[f]		
Maine	Millinocket	Great Northern Paper Co.	544[b]	Mg[g]	Bisulfite[g]	
New York	Glens Falls	Finch Pruyn & Co. Inc.	272	NH_3	Bisulfite[h]	2 Loddby[b]
Oregon	Lebanon	Crown Zellerbach	91	NH_3[h]	Acid Sulfite and Bisulfite[h]	Liquor sold concentrated or dried[h]
Oregon	Oregon City	Publishers Paper Co.	209	Mg[i]	Bisulfite[i]	B&W[i]
Oregon	Newberg	Publishers Paper Co.	227	Mg[i]	Bisulfite[i]	B&W[i]
Oregon	Salem	Boise Cascade Corp.	227[b]	NH_3[j]	Acid Sulfite[j]	Furnace[j]
Pennsylvania	Mehoopany	Procter & Gamble Paper Products Co.	218[c]	NH_3[e]		
Washington	Bellingham	Georgia-Pacific Corp.	454	Ca[k]	Acid Sulfite	Products such as ethanol and vanillin are produced - no burning.[k]

(Continued)

Page Two
Table 3-2. (Continued)

State	City	Company	Capacity[a] Mg/Day	Base	Acid Sulfite or Bisulfite	Recovery Furnaces
Washington	Camas	Crown Zellerbach	400	Mg[e,h]	Bisulfite[h]	Furnace[h]
Washington	Cosmopolis	Weyerhaeuser Co.	408	Mg[e,l]	Acid Sulfite[l]	Furnace[l]
Washington	Everett	Scott Paper Co.	757[m]	NH_3[e,m]	Bisulfite[m]	Furnace[m]
Washington	Hoquiam	ITT Rayonier Inc.	430	Na[e,n]	Acid Sulfite[n]	Kraft Type[n]
Washington	Longview	Weyerhaeuser Co.	363	Mg[e]	Bisulfite[o]	
Washington	Port Angeles	ITT Rayonier Inc.	454	NH_3[e]		
Wisconsin	Appleton	Consolidated Papers Inc.	112	Ca[d]	Acid Sulfite	
Wisconsin	Brokaw	Wausau Paper Mills Co.	169	Mg[d,e]		Copeland[b]
Wisconsin	Green Bay	American Can Co.	136	Ca[d,e]	Acid Sulfite	
Wisconsin	Green Bay	Procter & Gamble Paper Products Co.	377[d]	NH_3[d]		Liquor burned[d]
Wisconsin	Park Falls	Flambeau Paper Co.	100	Ca[d]	Acid Sulfite	
Wisconsin	Peshtigo	Badger Paper Mills Inc.	100	Ca[d]	Acid Sulfite	
Wisconsin	Port Edwards	Nekoosa Papers Inc.	195	Mg[d]		Copeland[t]

(Continued)

Page Three
Table 3-2. (Continued)

State	City	Company	Capacity[a] Mg/Day	Base	Acid Sulfite or Bisulfite	Recovery Furnace
Wisconsin	Rhinelander	St. Regis Paper Co.	68	Ca[d]	Acid Sulfite	
Wisconsin	Rothschild	Weyerhaeuser Co., Paper Division	181	Ca[d,e]	Acid Sulfite	
	TOTAL CAPACITY OF MILLS PRODUCING SULFITE PULP		8002			

[a] Unless otherwise noted, capacity figures are from personal communication from Isaiah Gellman, Executive Vice President, National Council of the Paper Industry for Air and Stream Improvement Inc., New York, NY. Letter dated 20 June 1978.

[b] Post's 1978 Pulp and Paper Directory, Miller Freeman Publications Inc., San Francisco, CA (1977).

[c] Hendrickson, E. R., J. E. Roberson, and J. B. Koogler, Control of Atmospheric Emissions in the Wood Pulping Industry, Environmental Engineering, Inc. Gainesville, Florida, CPA Contract No. CPA 22-69-18. March 1970.

[d] Didier, Paul, Wisconsin Department of Natural Resources, Bureau of Water Management, Personal communication with C. M. Thompson, Radian Corp. July 18, 1978.

[e] Gillespie William J., Special Projects Manager, National Council of the Paper Industry for Air and Stream Improvement, Inc. New York, NY. Letter dated June 13, 1978.

[f] Miller Stanley F., Personal communication with W. C. Micheletti and C. M. Thompson, Radian Corp. during visit to Publisher's Paper Company in Oregon City, Oregon.

[g] Keef, TAPPI 54(4):564-567. 1971.

(continued)

Table 3-2. (Continued)

[h] Personal communication from T. R. Aspitarte, Manager, Environmental Developmental Programs, Crown Zellerbach, Camas, Washington. Letter dated 7 June 1978.

[i] Personal communication with Rod Schmall, Manager of Environmental Services, Publisher's Paper Company, Oregon City, Oregon. Telephone conversation, dated 31 May 1978.

[j] Personal communication with Bill Gray, Technical Director, Boise Cascade Corporation, Salem, Oregon. Telephone conversation dated 31 May 1978.

[k] Personal communication with Fred Fenske, Engineer, Industrial Branch, Washington Department of Ecology (DOE), Lacy, WA. Comment made during visit to Washington DOE, 19 June 1978.

[l] Personal communication with K. R. Devones, Technical Director, Weyerhaeuser Co., Cosmopolis, Washington. Telephone conversation dated 1 June 1978.

[m] Personal communication with A. Murl Miller, Manager of Environmental Resources, Scott Paper Co., Everett, Washington. May 30, 1978. 363 Mg per day of production capacity will be phased out by January 1979.

[n] Personal communication with Jim Maxfield, ITT Rayonier, Hoquiam, Washington. Phone conversation dated 1 June 1978.

[o] Oregon Department of Environmental Quality, Sulfite Pulping - Emissions and Control, A Background Report for Sulfite Pulp Mill Regulations. Undated.

[p] Linero, A. Background Document: Acid Sulfite Pulping, Final Report. Environmental Science and Engineering, Inc. Gainesville, Florida. EPA-450/3-77-005, PB 264 301, EPA Contract No. 68-02-1402. January 1977. p. 29a.

Sulfite mills are concentrated in the Pacific Northwest in the states of Washington, Oregon and Alaska and in the Midwest in the state of Wisconsin. Other operating mills are in Florida, Maine, New York, and Pennsylvania. Two mills in Maine and one in Minnesota are idle. Two mills were shut down permanently in the spring of 1978; one was in Washington and one was in Wisconsin. Figure 3-2 indicates the approximate location of the 26 operating sulfite mills remaining in the United States.

The total capacities of the mills operating in the Pacific Northwest represent 64 percent of the national capacity. The total capacities of mills operating in Wisconsin represent 18 percent of the national capacity and the capacities of the eastern mills total 18 percent of the national capacity. According to the base used, 14 percent of the sulfite capacity is in mills using calcium as the base; 45 percent is in mills using magnesium as the base; 35 percent is in mills using ammonia as the base and 5 percent is in one mill using sodium as the base.

Six of the seven mills using calcium as the base are in Wisconsin. Seven of the ten mills using magnesium as the base are in the Pacific Northwest. The mills using ammonia as the base are widely distributed. The single mill using sodium as the base is in Washington.

3.2.3 Trends in the Capacity and Production of Sulfite Pulp

As indicated in Section 3.0, the statistical data regarding production trends and capacity trends are reported according to grade of pulp produced and not according to process. The sulfite process is used to produce sulfite paper grade pulp and dissolving pulp. Some dissolving pulp is also produced using the sulfate (kraft) process.

The American Paper Institute[5] has reported that the capacity for paper grades of sulfite pulp is 5970 Mg per day (6,582 short tons per day). (This calculation was based on 354 operating days per year.)

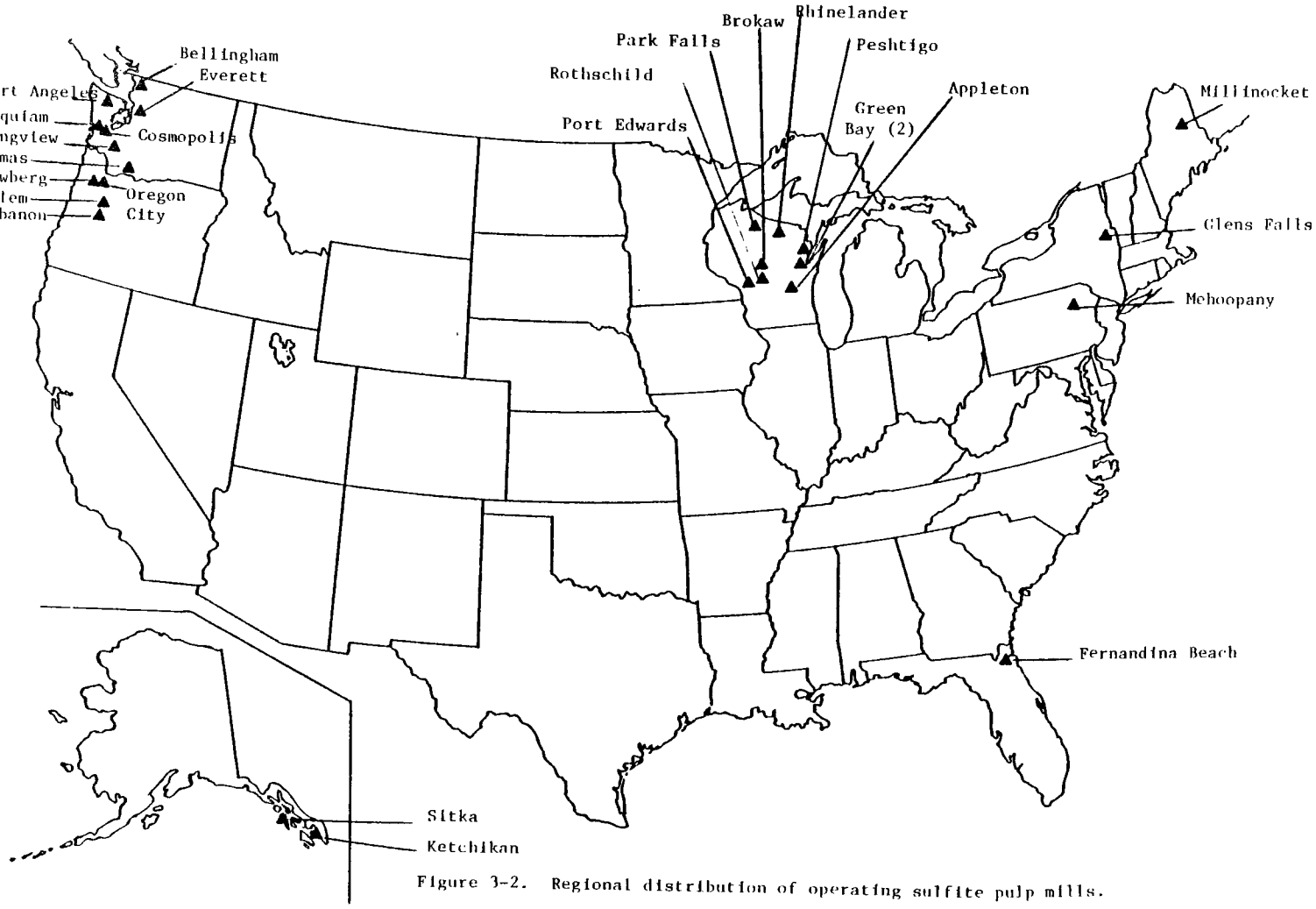

Figure 3-2. Regional distribution of operating sulfite pulp mills.

The 1978 capacity for dissolving pulp is reported to be 4046 Mg per day (4460 short tons per day). Thus, the total capacities for paper grade sulfite pulp and dissolving pulp are 10,017 Mg per day. The total capacities of the sulfite mills listed in Table 3-2 are 8002 Mg per day (8820 short tons per day). Direct subtraction indicates that about half of the dissolving pulp capacity is associated with the sulfate process. It must be realized that the above result is only an estimate. The individual mill capacity numbers in Table 3-2 are from the National Council of the Paper Industry for Air and Stream Improvement, Inc. (NCASI) and a few other sources. These capacity figures do not always agree with individual mill capacity figures obtained from other sources (Post's 1978 directory and contacts with personnel at individual mills).

Another factor influencing the validity of the above estimate is the fact that the capacity of a given mill is not fixed. The capacity of a given mill will vary with the type of pulp produced. Mills which produce dissolving pulp often also produce paper grade pulp and can change the amount of each type of pulp produced to suit changing market conditions.

Russell O. Blosser[6] (NCASI) has pointed out that the capacity for paper grade sulfite decreased from 7720 Mg per day (8510 tons per day) in 1960 to 5770 Mg per day (6360 tons per day) in 1978. This represents a 25 percent decrease in capacity over a period of 18 years. Mr. Blosser did not address trends in capacity for dissolving pulp produced by the sulfite process. Therefore, his statistics fail to include about one-fourth of the sulfite pulp industry.

Figure 3-3 illustrates the trends in capacity for producing sulfite paper grade pulps and dissolving pulps for the years 1967 through 1982. Capacities for the years 1979 through 1982 represent projections. The

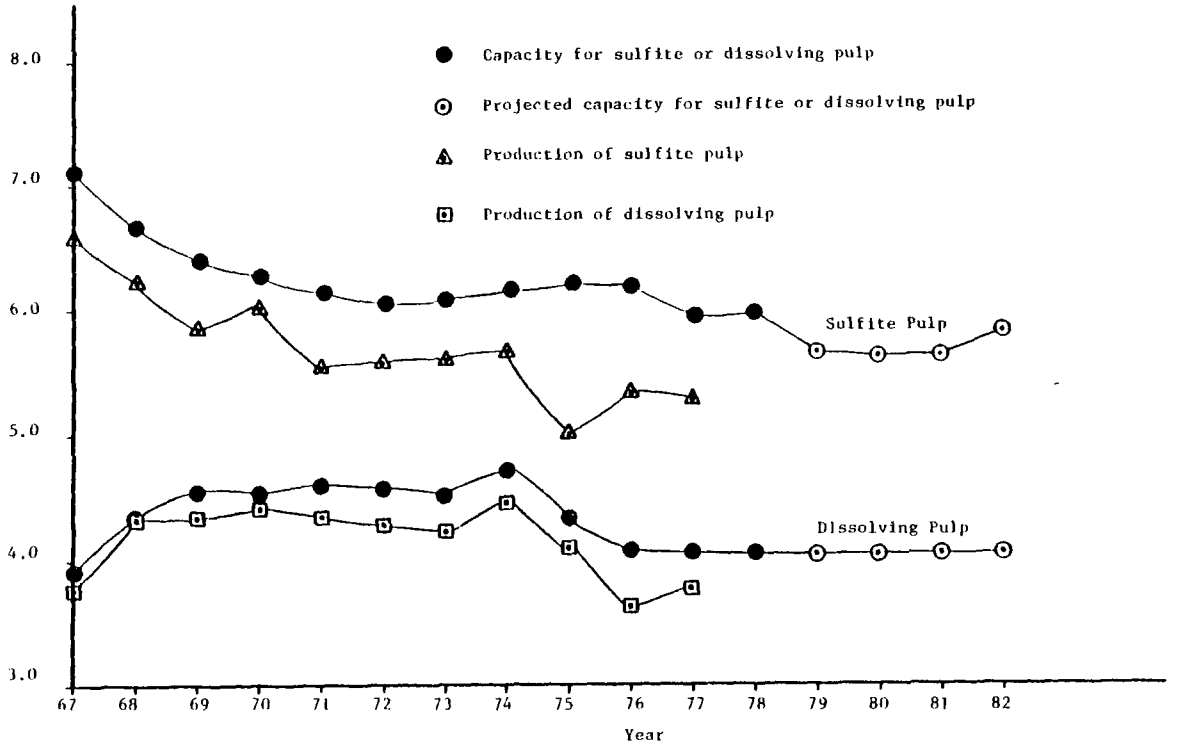

Figure 3-3. Trends in capacities and production rates for sulfite paper grade pulps and dissolving pulps.

Sources: American Paper Institute. Paper, Paperboard, Woodpulp, Fiber Consumption, 1976-1979 Capacity with Additional Data for 1980-1982. New York.

U. S. Department of Commerce, Bureau of the Census. Current Industrial Reports, Pulp, Paper, and Board, Washington, D. C., Yearly Summaries for 1967-1976.

U. S. Department of Commerce, Bureau of the Census. Current Industrial Reports, Pulp, Paper, and Board, Washington, D. C., Monthly Summaries for February, 1977 - February 1978.

02-3342-1

projections past 1980 were based on information presented concerning capacity under consideration. The capacity for producing sulfite paper grade pulp shows a steady decline totaling about 15% from the years 1967 to 1972. Capacity increased slightly from 1972 to 1976, then fell again. The closing of two small mills in the spring of 1978 and the planned phasing out of 363 Mg per day capacity by January 1979 continue the trend of decreasing capacity. The American Paper Institute survey[7] indicates that a capacity addition of 205 Mg per day is under consideration for 1982. Even if this capacity increase occurs, 1982 capacity will be below 1978 capacity.

Figure 3-3 also illustrates trends in production. Production of sulfite paper grades of pulp has generally run slightly over 90 percent of capacity for the past 10 years. There was a significant dip in production in 1975. Production of dissolving and special alpha grades of pulp has generally run about 95 percent of capacity. Significant drops in production occurred in 1975 and 1976. Drops in capacity followed closely the drops in production.

3.3 THE SEMICHEMICAL PULPING INDUSTRY

Semichemical pulp is produced partly by chemical action and partly by mechanical action. Wood chips or sawdust are digested with a cooking liquor to partially dissolve the lignin which holds the cellulose fibers together. The digested chips are pressed to remove some of the cooking liquor and to separate some of the fibers. More liquid is added and the partially pulped chips are sent through refiners which complete the pulping process mechanically.

Semichemical pulping has been defined by the American Pulp and Paper Association Committee on Coordination of Research[8] as follows:

> "A broad definition of semichemical pulping would be pulp produced in a yield range between that obtained by ordinary or full chemical pulping and that obtained by groundwood pulping, using any type of pulping liquor. The range of pulp yield most often thought of for semichemical pulping is between 68 and 85 percent."

In the past the dominant cooking liquor for producing semichemical pulp was a neutral sulfite solution. The sulfite solution was prepared using sodium as the base and was buffered so the final pH of the cook leaving the digester was between 7 and 9. This process is known as the neutral sulfite semichemical (NSSC) process and is still widely used. However, a significant fraction of semichemical pulp is now produced using other cooking liquors.

3.3.1 Cooking liquors Used in the Semichemical Processes

In current practice, semichemical pulp is produced using neutral sulfite liquor,[9] a non-sulfur liquor containing sodium carbonate and sodium hydroxide,[10] kraft green liquor,[11,12] kraft green liquor containing some sodium sulfite,[13] and ammonium bisulfite liquor (with an initial pH of 4).[14,15] As stated above, the NSSC process usually is carried out using sodium as the base. However, one plant in Tennessee uses ammonia as the base in the NSSC cooking liquor.[16] The discussion below will deal primarily with the neutral sulfite cooking liquor. The other liquors will be discussed to the extent necessary to describe the place of neutral sulfite cooking in the production of semichemical pulp.

Sodium based neutral sulfite cooking liquors can be prepared in several ways. The method chosen for liquor preparation will depend upon the process used for recovery of the spent liquor and in some cases the costs of alternate raw materials.

Many plants prepare neutral sulfite cooking liquor directly. When this method is used, the liquor is prepared by contacting an aqueous

solution of a base with a gas stream containing sulfur dioxide. The base may be either sodium carbonate (soda ash) or sodium hydroxide (caustic soda). Contact is usually carried out countercurrently in a packed tower. A solution of sodium sulfite results. Additional base will be added to provide buffering action. The amount of additional base required will depend on the wood species and the age of the feed material. Some plants combine commercial sodium sulfite with the base to prepare the cooking liquor.

Preparation of cooking liquor from fresh raw materials requires that the spent liquor not be recycled to the NSSC cooking operation. Several fates are possible for the spent liquor. In the past the spent liquor was often dumped into a lagoon or the nearest stream. Effluent limiations have made this practice no longer feasible.

If the NSSC mill is operated in conjunction with a kraft mill the spent liquor can be used as makeup for the kraft operation. Using the spent semichemical liquor as makeup to a kraft mill is possible only if the semichemical operation is a fraction the size of the kraft operation. In addition, the continuing "tightening up" of the sulfur balance (and in some cases the sodium balance) make it more difficult for kraft mills to accept the spent NSSC liquor.

Green liquor, either from a kraft mill or from a kraft type recovery furnace, can be used to prepare neutral sulfite cooking liquor. Several methods have been given in the literature. A brief review of five methods is given in Environmental Pollution Control, Pulp and Paper Industry, Part I, Air.[17] Other methods are described in the Kirk-Othmer Encyclopedia.[18]

Most of the methods for prearing NSSC liquor from green liquor have in common the treatment of green liquor with carbon dioxide. This treatment

releases hydrogen sulfide and makes a solution of sodium bicarbonate. The hydrogen sulfide is burned to produce sulfur dioxide. The sulfur dioxide and sodium bicarbonate are recombined to make NSSC cooking liquor. Variations exist in the ways the above steps are carried out. In the process developed by the Institute of Paper Chemistry, sulfur dioxide is contacted directly with flue gas to drive off hydrogen sulfide and produce NSSC liquor.

Neutral sulfite semichemical mills which are not operated in conjunction with a kraft mill usually operate one of two types of recovery furnaces. One type of recovery furnace operates under reducing conditions and the other operates under oxidizing conditions. Most of the furnaces which operate under reducing conditions produce a smelt which makes green liquor when dissolved in water. The green liquor produced is similar in chemical composition to kraft green liquor. These furnaces are referred to as kraft-type recovery furnaces. Preparation of NSSC liquor from green liquor is carried out as outlined above. Another option available to these mills is direct use of the green liquor as cooking liquor to produce semichemical pulp.

Furnaces made by SCA-Billerud also operate under reducing conditions. The spent liquor is pyrolyzed. This pyrolysis produces hydrogen sulfide and other reducing gases and solid sodium carbonate and soot. The reducing gases are burned to produce a stream rich in sulfur dioxide. The sulfur dioxide is recovered using sodium carbonate leached from the solids.

Fluidized bed combustion is used in the furnaces which operate under oxidizing conditions. Concentrated spent liquor is sprayed into the furnace from the top and hot air is forced into the bottom of the furnace. The ash formed is composed primarily of sodium sulfate. It contains about 10% sodium carbonate with minor amounts of calcium and potassium salts.

The ash forms into spherical pellets in the fluidized bed. The ash can be used as make-up for the kraft process if a kraft mill can be found which is willing to use it and if transportation can be arranged. Otherwise, disposal of the soluble ash is often a problem.

3.2.2 Characteristics of Semichemical Mills in the United States

It is theoretically possible to produce semichemical pulp from any liquor used to prepare chemical pulp. To do so cooking time must be shortened or the temperature lowered in the digester. The partially pulped wood can then be treated mechanically to complete the pulping process.

As noted, there is a natural relationship between operation of a NSSC mill and operation of a kraft mill. This relationship exists because the kraft mill can accept the spent liquor from the NSSC operation. On the other hand it is possible to prepare NSSC cooking liquor from kraft green liquor. One obvious way to eliminate the processing steps required to prepare NSSC liquor from kraft green liquor is to use kraft green liquor as the cooking liquor. A number of plants follow this procedure.

A spot check of several semichemical plants associated with kraft plants indicates that there is a trend toward replacing NSSC liquor with kraft green liquor in the production of semichemical pulp.

Plants which have made this conversion or which plan to in the near future are doing so largely in response to environmental pressures. As the mills discharge fewer pollutants, the kraft mill can no longer accept the output from a NSSC mill as makeup. Producing NSSC liquor from kraft green liquor requires at least two process steps and can involve emission of atmospheric pollutants such as hydrogen sulfide or sulfur dioxide.

On the other hand, some NSSC mills not associated with kraft mills are converting to non-sulfur cooking liquors. Most of these conversions have been made as the result of environmental pressures. Owens-Illinois, the first U.S. company to operate commercially the Institute of Paper Chemistry (IPC) method, has gone to a non-sulfur cooking liquor at both its semichemical plants.[19,20] Three other plants have been reported to be operating non-sulfur processes.

Table 3-3 lists capacities and cooking liquors for semichemical plants in the United States associated with kraft mills. The capacities of the associated kraft mills are listed. Table A-2 (Appendix A) gives the addresses and telephone numbers of these plants. Mills were listed as having associated kraft capacity if the same company had kraft capacity at the same location.

It is quite likely that some of the mills which are listed as using NSSC liquor no longer do so. Much of the information regarding cooking liquor comes from Hendrickson *et al.*[21] This report was prepared in early 1970. A spot check of semichemical mills operated in association with kraft mills indicates a trend toward substituting green liquor for NSSC liquor in the semichemical cook. Of the six plants contacted, two use kraft green liquor,[22,23] one uses a mixture of green liquor and sulfite liquor[24] and three[25,26,27] use NSSC liquor. One of the mills using green liquor had used NSSC liquor until two or three years ago.[28] One of the mills[29] using NSSC liquor plans to rebuild their digester and convert to green liquor within 2 years.

Figure 3-4 illustrates the geographical distribution of semichemical mills associated with kraft mills. They are concentrated in the north-

Table 3-3. CHARACTERISTICS OF MILLS PRODUCING SEMICHEMICAL PULP AND ASSOCIATED WITH KRAFT MILLS

State	City	Company	Capacity[a] Mg/Day	Cooking Liquor	Associated Kraft Capacity[a] Mg/Day
California	Antioch	Fibreboard Corp.	218	Kraft green liquor[g]	400
Florida	Fernandina Beach	Container Corp. of America	317	NSSC[b]	1270
Georgia	Cedar Springs	Great Southern Paper Co.	308	NSSC[b]	1615
Georgia	Savannah	Union Camp Corp.	272	Kraft green liquor[g]	2310
Louisiana	Bastrop	International Paper Co.	408	NSSC[g]	1090
Louisiana	Bogalusa	Crown Zellerbach	136	NSSC[d]	1225
Louisiana	Hodge	Continental Forest Industries	227	NSSC[g]	1270
Louisiana	West Monroe	Olinkraft Inc.	227	Mixture of kraft green liquor and sulfite[e]	1040
New Hampshire	Berlin	Brown Co., Paper Group	190	NSSC[a]	700
North Carolina	Plymouth	Weyerhaeuser Co.	227	NSSC[g]	1130
Oklahoma	Valliant	Weyerhaeuser Co.	725	Kraft green liquor[b]	1360
Oregon	Albany	Western Kraft Paper Group	181	NSSC[b]	500
Oregon	Toledo	Georgia-Pacific Corp.	227	Kraft green liquor[f]	1000

(continued)

Page Two
Table 3-3. (continued)

State	City	Company	Capacity[a] Mg/Day	Cooking Liquor	Associated Kraft Capacity[a] Mg/Day
South Carolina	Georgetown	International Paper Co.	295[g]	NSSC[g]	1400[g]
Virginia	Covington	Westvaco Corp.	272	NSSC[g]	1000
Virginia	Hopewell	Continental Forest Industries	159	NSSC[g]	800
Washington	Longview	Longview Fibre Co.	200	NSSC[h]	1720
Washington	Longview	Weyerhaeuser Co.	218	Kraft green liquor[i]	280
Washington	Wallula	Boise Cascade Corp.	249	NSSC[g]	420
		Total Capacity of Mills Producing Semichemical Pulp and Associated With Kraft Mills	5056		
		Total Capacity of Mills Reported to be Using Kraft Green Liquor	1660		
		Total Capacity of Mills Reported to Use NSSC Process and Associated with Kraft Mills	3396		

[a]Post's 1978 Pulp and Paper Directory, Miller Freeman Publications Inc., San Francisco, California (1977)

[b]Personal communication with William J. Gillespie, Special Projects Manager, National Council of the Paper Industry for Air and Stream Improvement, Inc., New York. Letter dated 13 June 1978.

[c]Personal communication with Dr. Glenn Kimble, Air and Water Conservation Director, Union Camp Corporation, Savannah, Georgia. Telephone conversation dated 9 June 1978. This plant switched from NSSC about 1975.

Page Three
Table 3-3. (continued)

[d]Personal communication with R. M. Rogan, Technical Supervisor, Crown Zellerbach, Bogalusa, Louisiana. Telephone conversation dated 8 June 1978 and letter dated 14 June 1978. This mill plans to change to kraft green liquor within 2 years.

[e]Personal communication with R. A. Somsen, Technical Services Director, Olinkraft Inc., West Monroe, Louisiana. Telephone conversation dated 9 June 1978.

[f]Personal communication with D. McLaughlin, Environmental Engineer, Georgia-Pacific, Toledo, Oregon. Telephone conversation dated 1 June 1978

[g]Hendrickson, E. R., J. E. Roberson, and J. B. Koogler, Control of Atmospheric Emissions in the Wood Pulping Industry Environmental Engineering, Inc. Gainesville, Florida, CPA Contract No. CPA 22-69-18. March 1970.

[h]Personal communication with N. H. Anderson, Mill Manager, Longview Fibre Co., Longview, Washington. Telephone conversation dated 30 May 1978.

[i]Battan, Howard R, George J. Ahlquist, and Edward J. Snyder. "Green Liquor Pulping of Southern Oak for Corrogating Medium" TAPPI 59, (6), pp. 130-133. June 1976.

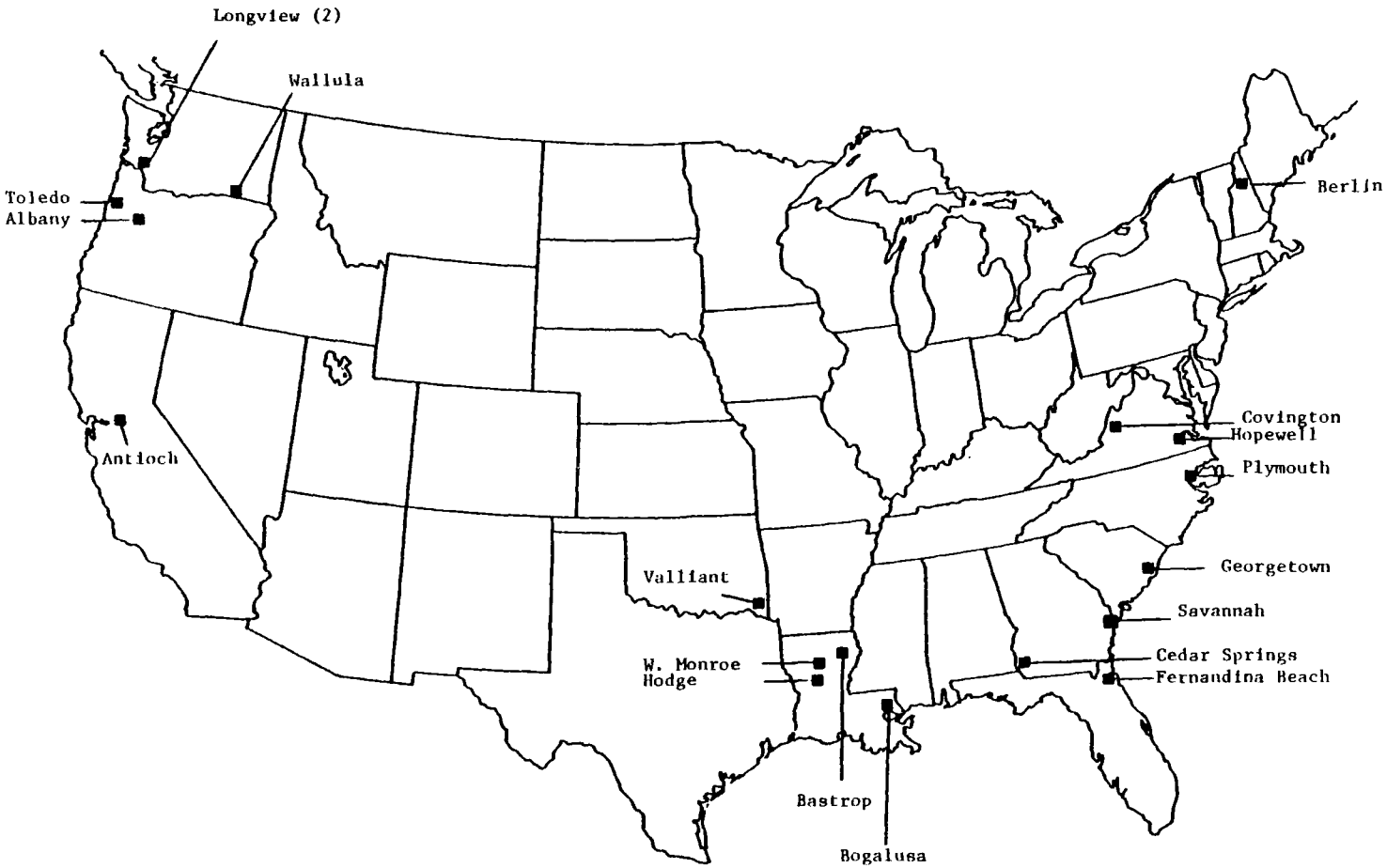

Figure 3-4. Regional distribution of semichemical pulp mills associated with kraft pulp mills.

western and southeastern portions of the United States.

Table 3-4 lists the capacities, cooking liquors, and recovery systems for semichemical mills with no apparent associated kraft capacities. The addresses and telephone numbers of these plants are given in Appendix A (Table A-3). Some of the cooking liquor information may not be current. The known shifts to non-sulfur cooking liquor have occurred since 1970. The information available about recovery systems generally does not describe these systems adequately. The information is not specific enough to determine the type of recovery system in operation at each plant.

According to Tables 3-3 and 3-4 the total capacity of semichemical mills in the United States is 12,950 Mg of pulp per day (14,275 tons per day). Of this total capacity 5,060 Mg per day is in mills associated with kraft mills and 7900 Mg per day is in stand alone semichemical mills. The capacity of plants reported to use green liquor is 1,660 Mg per day and the capacity of plants known to use a non-sulfur process is 2,115 Mg per day. If all the remaining mills use the NSSC process the total capacity for NSSC pulp is 9,180 Mg per day (10,120 tons per day). Using these figures, approximately 70 percent of the semichemical capacity uses NSSC cooking liquor. This figure may be larger than the actual NSSC capacity since some mills which are indicated as using the NSSC process may have switched to an alternate cooking liquor.

The American Paper Institute survey[30] lists the 1978 capacity for semichemical pulp as 12,150 Mg per day (13,400 tons per day). The difference between this figure and the capacity totals from Tables 3-3 and 3-4 (about 6 percent) is not significant and reflects the differences in capacities reported by different sources of information.

Table 3-4. CHARACTERISTICS OF MILLS IN THE UNITED STATES PRODUCING SEMICHEMICAL PULP AND NOT ASSOCIATED WITH KRAFT MILLS

State	City	Company	Capacity Mg/Day	Cooking Liquor	Recovery System[a]	Comments
Alabama	Mobile	National Gypsum Co.	159[a]	--	None Listed[a]	International Paper Co. and Scott Paper Co. each have large kraft mills in Mobile
Alabama	Stevenson	Mead Corp.	680[b]	NSSC[b]	1 SCA-Billerud[a]	
Indiana	Terre Haute	Weston Paper & Mfg. Co.	245[b]	NSSC[b]	None Listed	
Iowa	Dubuque	Celotex Corp.	227[a]	--	None Listed	
Iowa	Fort Madison	Consolidated Packaging Corp.	127[b]	NSSC[b]	1 Copeland[a]	
Kentucky	Hawesville	Western Kraft Paper Group	250[b]	NSSC[b,c]	1 Copeland[a]	
Michigan	Filer City	Packaging Corp. of America	544[b]	NSSC[b,c]	1 B and W[a]	
Michigan	Ontonagon	Hoerner Waldorf	400[b]	NSSC;[b] Non-Sulfur[c]	Zimpro Wet[a] oxidation system	
Michigan	Otsego	Menasha Corp.	204[b]	NSSC;[b,c] Non-Sulfur[d]	Dorr-Oliver[a]	
Minnesota	Saint Paul	Hoerner Waldorf	318[a]	NSSC[e]	None Listed	
Mississippi	Meridian	Flintkote Co.	45[a]	--	None Listed	
New Hampshire	Groveton	Groveton Papers Co.	272[b]	NSSC[b]	None Listed	

(continued)

Page Two
Table 3-4. (continued)

State	City	Company	Capacity Mg/Day	Cooking Liquor	Recovery System[a]	Comments
New York	Lyons Falls	Georgia-Pacific Corp.	109[a]	NSSC[e]	None Listed	
New York	Plattsburgh	Georgia-Pacific Corp.	91[a]	NSSC[e]	None Listed	
Ohio	Circleville	Container Corp. of America	272[b]	NSSC[b,c]	None Listed	
Ohio	Coshocton	Stone Container Corp.	408[b]	NSSC[a,b,c,]	2 Copeland[a]	Post's lists capacity of 590 Mg/day[a]
Oregon	North Bend	Menasha Corp.	181[b]	NSSC[d]	Dorr-Oliver[d]	Incinerator not listed in Post's Directory
Pennsylvania	Erie	Hammermill Papers Group	350[e]	NSSC[e]	B and W[a]	
Pennsylvania	Sunbury	Celotex Corp.	217[a]	--	None Listed[a]	
Puerto Rico	Arecibo	Caribe Inc., Productos Forestales	113[a]	--	None Listed[a]	
South Carolina	Hartsville	Sonoco Products Co.	408[b]	NSSC[b,c,]	Sulfite Recovery Process[a]	
Tennessee	Harriman	Harriman Paperboard Corp.	227[b]	NSSC[b]	None Listed[a]	
Tennessee	New Johnsonville	Inland Container Corp.	358[b]	NSSC[b]	B and W[a]	Ammonia base[f]
Virginia	Big Island	Owens-Illinois Inc.	522[a]	Non-Sulfur[c]	2 Smelters[a]	
Virginia	Riverville	Virginia Fibre Corp.	463[a]	Non-Sulfur	1 B and W[a]	

(continued)

Page Three
Table 3-4. *(continued)*

State	City	Company	Capacity Mg/Day	Cooking Liquor	Recovery System[a]	Comments
Wisconsin	Green Bay	Green Bay Packaging Co.	181[b]	NSSC[b,c]	Dorr-Oliver[a]	
Wisconsin	Tomahawk	Owens-Illinois Co.	526[a]	Non-Sulfur[c]	1 B and W[a] (kraft type)[g]	
		Total Capacity of Operating Semichemical Mills Not Associated with Kraft Mills	7897			
		Total Capacity of Mills Reported to be Using Non-Sulfur Cooking Liquor	2115			
		Capacity of Remaining Operating Semichemical Mills Not Associated with Kraft Mills	5782			

[a]Post's 1978 Pulp and Paper Directory, Miller Freeman Publications, Inc. San Francisco, California (1977).

[b]Personal communication with Isaiah Gellman, Executive Vice President, National Council of the Paper Industry for Air and Stream Improvement, Inc., New York, NY. Letter dated 20 June 1978.

[c]Personal communication with William J. Gillespie, Special Projects Manager, National Council of the Paper Industry for Air and Stream Improvement, Inc., New York, NY. Letter dated 13 June 1978.

[d]Personal communication with Tom Williscroft, Plant Manager, Menasha Corp., North Bend, Oregon. Verbal communication during plant visit, 23 June 1978.

[e]Hendrickson, E. R., J. E. Roberson, and J. B. Koogler. Control of Atmospheric Emissions in the Wood Pulping Industry Environmental Engineering, Inc. Gainesville, Florida. CPA Contract No. CPA 22-69-18. March 1970.

[f]Bryan, William P., "Inland's Tennessee Mill Was First Designed for Ammonia Base NSSC" Paper Trade Journal 156(40): pp. 36-40, September 25, 1972.

[g]Galeano, Sergio F. and Byron M. Dillard, "Process Modifications for Air Pollution Control in Neutral Sulfite Semichemical Mills" JAPCA 22(3) p. 195., March 1972.

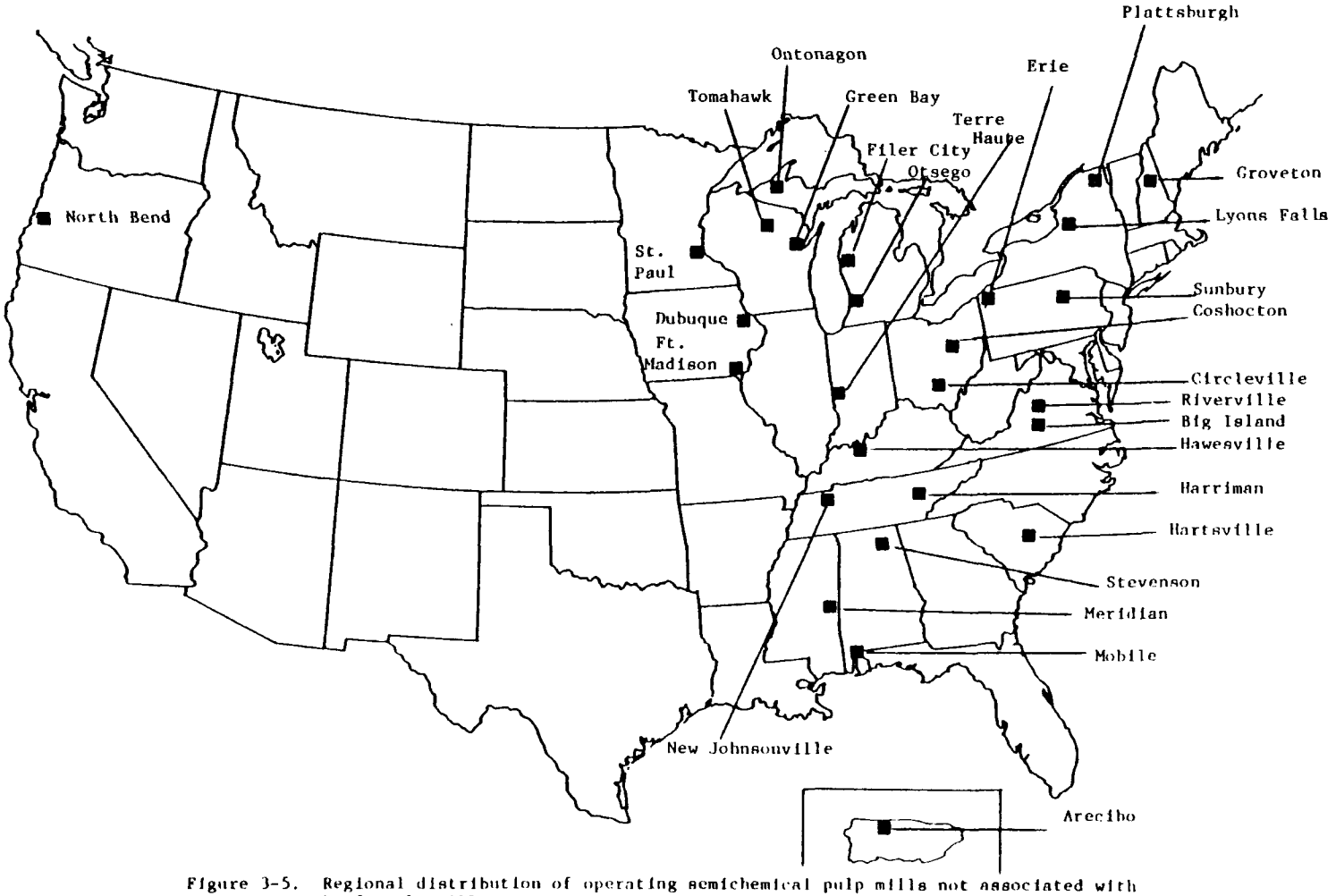

Figure 3-5. Regional distribution of operating semichemical pulp mills not associated with kraft pulp mills.

Figure 3-5 illustrates the geographical distribution of stand alone semichemical plants. They are scattered throughout the eastern United States. One is in Oregon and one is in Puerto Rico.

3.3.3 Trends in the Capacity and Production of Semichemical Pulp

Figure 3-6 shows the trends in the capacity for production of semichemical pulp for the years 1967 through 1982. Capacities for the years 1979 through 1982 represent projections. The projections past 1982 were based on information presented concerning capacity under consideration.[31]

Capacity for producing semichemical pulp rose sharply from 1971 to 1973 and again from 1975 to 1978. Projections indicate a slower rise over the next few years. Production figures have been rather erratic. Production has been over 85 percent of capacity in nine of the last eleven years. Production dropped to 75 percent of capacity in 1975.

The American Paper Institute survey[32] indicates that a capacity addition of 716 Mg per day is under consideration for 1981.

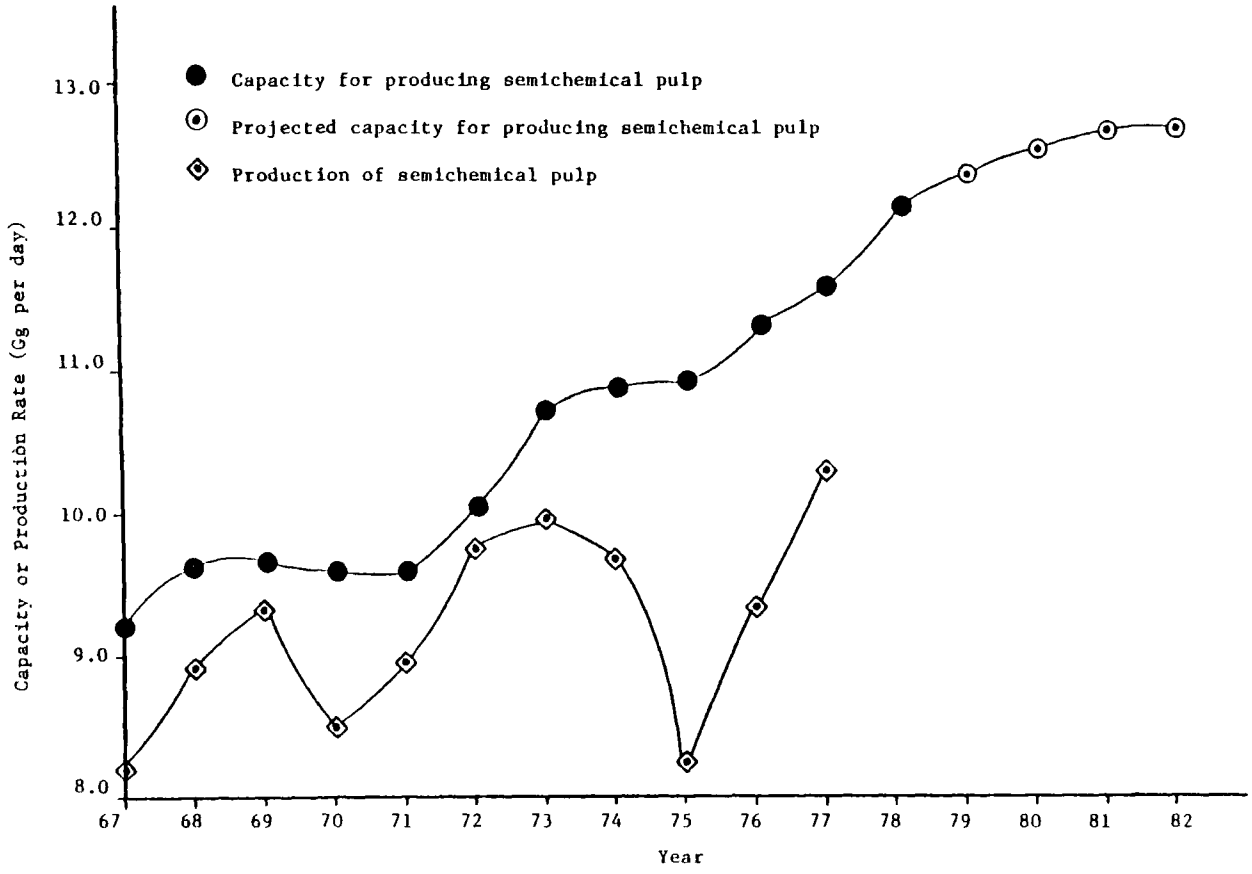

Figure 3-6. Trends in capacity and production of semichemical pulp.

Sources: American Paper Institute. Paper, Paperboard, Woodpulp, Fiber Consumption, 1976-1979 Capacity with Additional Data for 1980-1982. New York.

U. S. Department of Commerce, Bureau of the Census. Current Industrial Reports, Pulp, Paper, and Board, Washington, D. C., Yearly Summaries for 1967-1976.

U. S. Department of Commerce, Bureau of the Census. Current Industrial Reports, Pulp, Paper, and Board, Washington, D. C., Monthly Summaries for February, 1977-February 1978.

02-3341-1

REFERENCES

1. Gillespie, W. J., NCASI. Private communication with Wayne C. Micheletti, Radian Corporation. June 13, 1978.

2. Aspitarte, T. R., Crown Zellerbach, Camas, Washington. Private communication with Wayne C. Micheletti, Radian Corp. June 7, 1978.

3. Sulfur Dioxide in Sulfite Cooking Liquor. TAPPI. Atlanta, Georgia. T604su-70. 1970.

4. Gillespie, W. J., NCASI. Private communication with Wayne C. Micheletti, Radian Corporation. June 13, 1978.

5. American Paper Institute. Paper, Paperboard, Woodpulp, Fiber Consumption, 1976-1979 Capacity with Additional Data for 1980-1982. New York.

6. Blosser, R. O., NCASI. Private communication with Wayne C. Micheletti, Radian Corporation. June 1, 1978.

7. American Paper Institute. Paper, Paperboard, Woodpulp, Fiber Consumption, 1976-1979 Capacity with Additional Data for 1980-1982. New York.

8. Durgin, A. G. and T. W. Small, Jr. Semichemical Pulping. In: Modern Pulp and Papermaking, 3rd edition, Calkin, J. B. (ed.). New York, Reinhold Publishing Corporation, 1957. p. 157.

9. Anderson, N. S., Longview Fibre Co., Longview, Washington. Private communication with Wayne C. Micheletti, Radian Corporation. May 30, 1978.

10. Early, F., Environmental Protection Agency, National Enforcement Investigation Center, Denver. Private communication with Wayne C. Micheletti, Radian Corporation. May 17, 1978.

11. Early, F., Environmental Protection Agency, National Enforcement Investigation Center, Denver. Private communication with Wayne C. Micheletti, Radian Corporation. May 17, 1978.

12. McLaughlin, D., Georgia Pacific Corporation, Toledo, Ohio. Private communication with C. M. Thompson, Radian Corporation. June 9, 1978.

13. Somsen, R. A., Olinkraft, Inc., West Monroe, Louisiana. Private communication with C. M. Thompson, Radian Corporation. June 9, 1978.

14. Gillespie, W. J. NCASI. Private communication with Wayne C. Micheletti, Radian Corporation. June 13, 1978.

15. Aspitarte, T. R., Crown Zellerbach, Camas, Washington. Private communication with Wayne C. Micheletti, Radian Corporation. June 7, 1978.

16. Bryan, William P. "Inland's Tennessee Mill was First Designed for Ammonia Base NSSC." Paper Trade J. 156 (40): 36-40. September 1972. APTIC Abstract 046832.

17. Environmental Pollution Control, Pulp and Paper Industry, Part 1, Air. Environmental Protection Agency, Office of Technology Transfer. EPA-625/7-76-001. October 1976.

18. Tomlinson, G. H., II. Pulp. In: Kirk-Othmer Encyclopedia of Chemical Technology, Vol. 16, Standen, A. (ed.). New York, John Wiley & Sons, Inc., 1968. p. 716.

19. Early, F., Environmental Protection Agency, National Enforcement Investigation Center, Denver. Private communication with Wayne C. Micheletti, Radian Corporation. May 17, 1978.

20. Didier, P. and D. Evans, Wisconsin Department of Natural Resources, Bureau of Water Management and Bureau of Air & Solid Waste Management. Private communication with Wayne C. Micheletti, Radian Corporation, June 6, 1978.

21. Hendrickson, E. R., J. E. Roberson, and J. B. Koogler, Control of Atmospheric Emissions in the Wood Pulping Industry, Vol. 1, Dept. of Health, Education and Welfare, Consumer Protection and Air Pollution Control Administration. Final Report, Contract No. CPA 22-69-18, March 15, 1970, (Appendix A).

22. McLaughlin, D., Georgia Pacific Corporation, Toledo, Ohio. Private communication with C. M. Thompson, Radian Corporation. June 1, 1978.

23. Kimble, G., Union Camp Corporation, Savannah, Georgia. Private communication with C. M. Thompson, Radian Corporation. June 9, 1978.

24. Somsen, R. A., Olinkraft, Inc., West Monroe, Louisiana. Private communication with C. M. Thompson, Radian Corporation. June 9, 1978.

25. Anderson, N. H., Longview Fibre Company, Longview, Washington. Private communication with Wayne C. Micheletti, Radian Corporation. May 30, 1978.

26. Rogan, R. M., Crown Zellerbach Corporation, Bogalusa, La. Private communication with C. M. Thompson, Radian Corporation. June 9, 1978.

27. Smith, D., Great Southern Paper Company, Cedar Springs, Ga. Private communication with C. M. Thompson, Radian Corporation. June 27, 1978.

28. Kimble, G., Union Camp Corporation, Savannah, Ga. Private communication with C. M. Thompson, Radian Corporation. June 9, 1978.

29. Rogan, R. M., Crown Zellerbach Corporation, Bogalusa, La. Private communication with C. M. Thompson, Radian Corporation. June 14, 1978.

30. American Paper Institute. Paper, Paperboard, Woodpulp, Fiber Consumption, 1976-1969 Capacity with Additional Data for 1980-1982. New York.

31. American Paper Institute. Paper, Paperboard, Woodpulp, Fiber Consumption, 1976-1969 Capacity with Additional Data for 1980-1982. New York.

32. American Paper Institute. Paper, Paperboard, Woodpulp, Fiber Consumption, 1976-1969 Capacity with Additional Data for 1980-1982. New York.

4.0 PROCESS DESCRIPTION AND EMISSIONS SOURCES

The purpose of this chapter is to describe the sulfite and neutral sulfite semichemical wood pulping processes and to identify the types and sources of atmospheric emissions associated with each process. Both pulping processes are well proven and in widespread commercial use, but neither process is well defined. That is to say, both processes are subject to a number of variations, depending on the type of wood used and paper product produced. For this reason, flow sheets with rigorous mass and energy balances are not included. Instead a generalized flow sheet of each process has been prepared showing the major process units. These process units are described in detail and the potential atmospheric emission sources are discussed.

4.1 SULFITE PROCESS

The pulping of wood by the sulfite process involves the dissolution of lignin in the wood chips by chemical attack in order to free cellulosic fibers. The chemical attack is accomplished by cooking the wood chips in one of several acidic liquors for a specified period of time. In this respect, the sulfite wood pulping process is a fairly standard industrial procedure. However, the use of different cooking liquors results in the generation of different spent liquors which require proper treatment. Since water pollution restrictions prevent dumping of the spent liquor, a number of process schemes have been devised to recover heat and/or chemicals from the spent liquor. The variety of these recovery systems means

that there is no "typical" sulfite process, but rather a number of processes which establish a certain degree of uniqueness for each sulfite pulp mill.

The major units in the sulfite pulping process are the digester, the blow pit or dump tank, the washers and screens, the evaporators, the recovery system, and the liquor preparation system. These process units are shown in Figure 4-1. Each of these units is a potential emission source for atmospheric pollutants.

4.1.1 Digesters

4.1.1.1 Process Description

Two types of digesters are used in wood pulping operations: batch and continuous. The batch digester is the most common type used in the sulfite process. It is a large cylindrical vessel capable of handling 18 Mg (20 tons) of wood chips at a time.[1] The chips are fed into the digester through a large opening in the top until the vessel is full. The top opening is sealed and freshly prepared sufite cooking liquor is added until the wood chips are completely covered. Steam is added until the mixture has reached the proper pressure and temperature.

The pressure and temperature of the digester contents are then maintained for a specified period of time while the chips "cook". Typical operating pressures may vary from 500 to 860 kPa (80 to 125 psi). Typical temperatures may range from 135 to 170°C (275 to 340°F). The cooking time is usually between four and eight hours. The operating conditions chosen by a particular mill depend on the type of wood being pulped, the desired yield and product, and the type of cooking liquor.[2]

The cooking liquor is a solution of sulfurous acid (H_2SO_3) and a bisulfite salt, such as sodium bisulfite ($NaHSO_3$). During the cooking

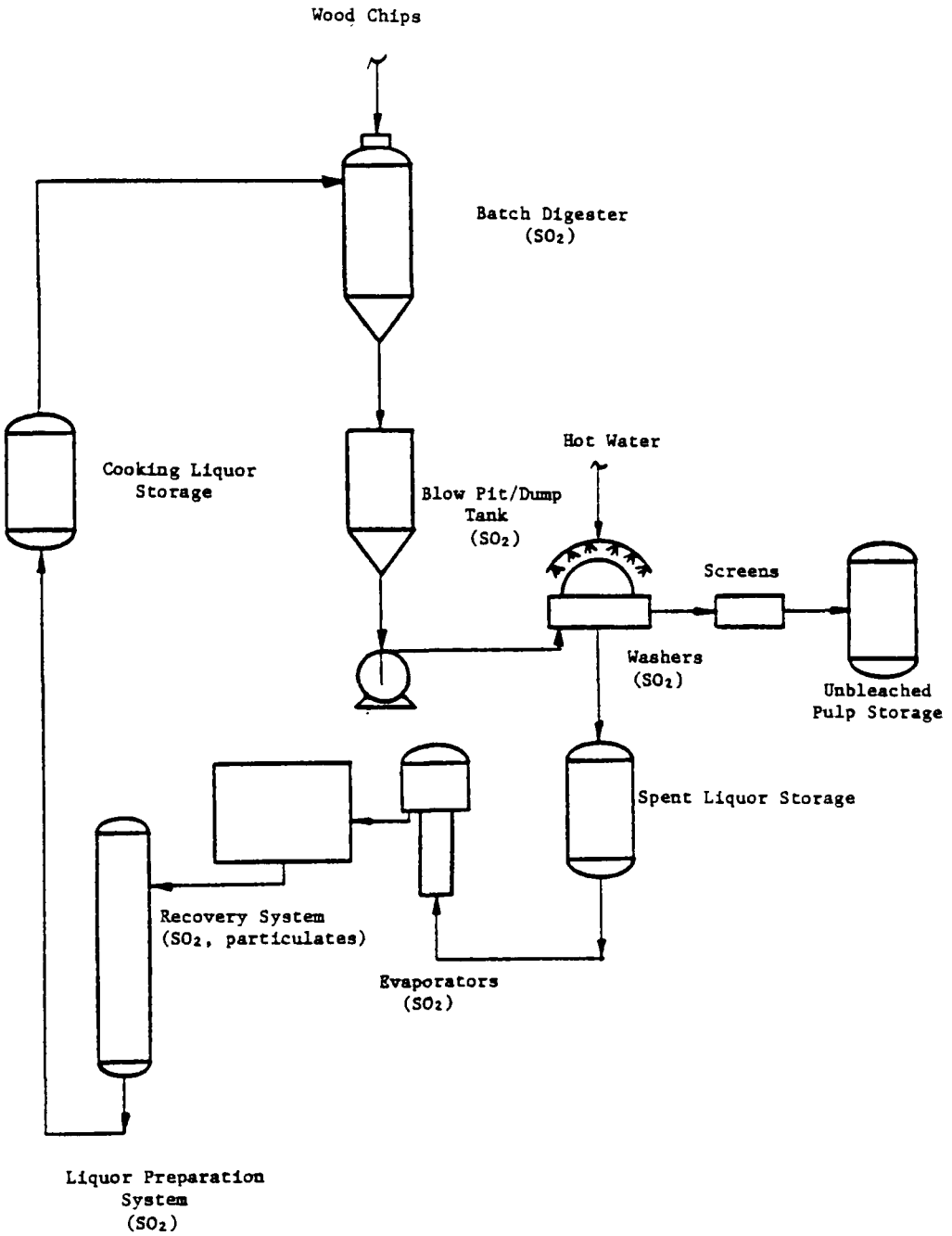

Figure 4-1. Generalized sulfite process.
(Potential pollutants shown in parenthesis)

70-1260-1

cycle, the cellulose-lignin complex is separated by the chemical action of either dissolved sulfite ions ($SO_3^{=}$) or dissolved bisulfite ions (HSO_3^{-}). The exact reaction sequence is unknown. Some believe that as the sulfite ions from the sulfurous acid react with the lignin, more sulfite is supplied by the dissociation of the bisulfite salt. In this way, the bisulfite buffers the cooking liquor by maintaining a reasonably constant sulfite concentration.[3] Still others believe that the primary reaction is between the lignin and the bisulfite ions, with a base, such as sodium, acting as a buffering agent to prevent polycondensation of lignin.[4]

Digester pressure is also kept constant during the cooking cycle by drawing off amounts of liquid and gas. These relief streams may be directed to a number of other process units, but are usually sent to a liquor storage tank or a high pressure accumulator.

When the cooking cycle is completed, the digester can be emptied in a number of ways. In the past, the most common practice was blowing. In this method of discharging the pulp the digester pressure is relieved to about 207 to 276 kPa (30 to 40 psig), a large valve near the base of the digester is opened, and the contents of the unit are blown into an open pit. In some cases, the pulp is blown "uphill" from the bottom of a digester into a blow pit located 1.5 to 3 meters (5 to 10 feet) higher. The minimum pressure for a "clean blow" (one in which all the pulp is removed from the digester) is reported to be 377 kPa (40 psig).[5]

Recently, pulp mills have been using a lower pressure blow or a dump. In a low pressure blow the digester pressure is relieved to a level slightly above atmospheric before the digester contents are dumped into an open tank located directly beneath the unit. To ensure a clean blow, a cool rinse liquor may be added to the digester. The rinse liquor is usually spent

sulfite cooking liquor that has been recycled or waste wash water.

Another method of emptying the digester is the pulp pump-out system. It is more expensive and time consuming than either high-pressure blowing or near-atmospheric dumping. Consequently, the pulp pump-out system has achieved only limited use. Unlike the other two methods, this system is totally enclosed. Following a cook, the digester pressure is relieved to atmospheric, the lower valve is opened, and the contents are mechanically pumped from the digester to a closed dump tank. To ensure complete pulp removal, the digester is usually rinsed with spent sulfite liquor or waste wash water.

Continuous digesters are most commonly used in NSSC pulping operations. However, at least one sulfite pulp mill uses a continous digester.[6] In this type of digester, an uninterrupted flow of wood chips passes through the unit where steam and cooking liquor are added. The method of conveyance may be mechanical or gravity flow. Since the process is continuous, blow pits of dump tanks are used as hold vessels before the pulp is sent to washers.[7] In some cases a continous diffusion washing stage is integrated with the digester.

4.1.1.2 Emission Sources

Batch digesters have two potential sources of atmospheric emissions: relief gases removed from the unit during the cooking cycle or prior to pulp discharge and blow gases expelled during the pulp discharge. Depending on the pH of the cooking liquor, digester relief gases may contain high concentrations of sulfur dioxide. Acid sulfite cooking liquors usually have a pH less than 2.0 and are more likely to release large amounts of gaseous SO_2 in the digester. For a bisulfite liquor (pH between 2 and 5), the amount of gaseous SO_2 evolved during the cook is much less.

During the cooking cycle, relief gases are continously removed in order to maintain a constant digester pressure. In addition, a large amount of relief gas may be vented from the system prior to the digester blow, depending on the type of pulp discharge being practiced. Both types of relief gas contain significant amounts of SO_2. Since the purpose of the pre-blow digester relief is to reduce blow emissions, this relief is usually collected for appropriate disposal.

Digester blow emissions can be very large. The emissions will depend on the type of pulp discharge practiced. For a high pressure blow, the pulp/liquor slurry is passing from a pressurized to atmospheric regime with the initial liquor temperature above the boiling point. Consequently, the liquor flashes and produces large amounts of steam. Similarly, the sulfur dioxide, which was more soluble at high pressure, is desorbed and liberated with the steam. Cooking liquors with high sulfite concentrations (low pH) produce greater SO_2 emissions.

Emissions resulting from a digester blow are short and infrequent. A blow will last only a few minutes with the peak flows and concentrations lasting for five to six minutes.[8] Since the blow occurs only at the end of a cooking cycle, the emissions for each digester should occur no more than once every four to eight hours. Pulp mills, however, will have several digesters operating on a staggered sequence so that one digester or another will be blowing every hour or two.

Digester blow emissions are reduced considerably in a low pressure blow. Much of the SO_2 is removed in the relief gases when the digester pressure is lowered. The emissions are reduced even further if a cool rinse liquor is added. The rinse liquor lowers the slurry temperature and

therefore decreases the amount of liquor that flashes when the pulp is discharged.

Since pulp pump-out systems are completely enclosed, digester blow emissions are virtually eliminated. These systems are expensive and time consuming, however, and have received only limited use.

The only source of emissions from continous digesters is pressure relief gases. Since the discharge of pulp is uninterrupted, there is no intermittent digester blow and, therefore, no emissions associated with this step in the pulping operation. Continuous digesters are, for the most part, completely closed systems and normally use a cooking liquor in the pH range of 4 to 6. These features mean that continuous digesters usually have negligible emissions.[9]

4.1.2 Blow Pits/Dump Tanks

4.1.2.1 Process Description

Blow pits and dump tanks are used as temporary storage vessels for the large amounts of pulp and liquor which are intermittently discharged from batch digesters. Blow pits and dump tanks may receive pulp from one or several digesters. Following discharge to these vessels, the pulp is drained of spent sulfite liquor and then transferred to the washers. In some cases, acid sulfite pulp may also be neutralized. The spent liquor is either directed to a recovery system for recovery of heat and/or chemicals or treated for disposal or sale.

At one time, some mills also used these vessels for pulp washing. Once the spent sulfite liquor had drained, the vessel would be flooded with water and allowed to drain again. This procedure would be repeated several times, until the operator was satisfied, based on his experience, that the pulp was well washed. The wastewater from this pulp washing procedure would be very

dilute and would require extensive concentration before it could be fed to the recovery system. Therefore, this type of pulp washing is now considered inefficient and is rarely practiced at present.

4.1.2.2 Emission Sources

The emissions most commonly associated with blow pits and dump tanks result from the discharge of pulp from batch digesters. For the purposes of this study, these emissions are considered to be from the digester and are discussed in Section 4.1.1.2.

In the event that a blow pit or dump tank is also used for pulp washing, small amounts of sulfur dioxide may be emitted. When the cool wash water contacts the hot pulp, steam is produced and some sulfur dioxide may vaporize. These SO_2 emissions would be very low.

4.1.3 Washers and Screens

4.1.3.1 Process Description

From the blow pits and dump tanks the pulp is directed to a system of washers and screens. The washers rinse the pulp with hot water to remove remaining spent sulfite liquor. Several types of washers are currently in use, but the most common is a series of rotary drum vacuum filters, arranged for multistage countercurrent washing. Wash water may be either evaporator condensate or fresh water. The effluent wash water is sent to spent liquor storage.

The purpose of screens is to prepare a pulp of uniform consistency by removing uncooked knots, fiber bundles, and other oversize material.

4.1.3.2 Emission Sources

Washers and screens are usually considered to be very minor sources of sulfur dioxide emissions.[10,11] Depending on the cooking liquor pH and the type of washers and screens employed, the emissions may be low enough that

SO_2 recovery through scrubbing is not practical.[12] However, if other SO_2 emissions sources are well controlled, then washers and screens may be a significant fraction of the total mill emissions.

4.1.4 Evaporators

4.1.4.1 Process Description

The pulp and paper industry is the single largest user of evaporator equipment.[13] The purpose of the evaporators is to increase the total solids content of the spent sulfite liquor from about 15 percent to as much as 55 to 65 percent. The liquor is then either sold as a by-product or combusted in a furnace for recovery of heat and/or chemicals. Two mills (one in Oregon and one in Wisconsin) sell the concentrated spent liquor to yeast plants that remove much of the organic material. At the Oregon mill the residue is returned and burned once the nutrient value of the spent liquor has been used by the yeast growing process.[14]

Any one of several evaporator types can be used, including horizontal spray film, long tube vertical, and vapor recompression. Each mill is unique unto itself. Some mills have relatively simple systems involving only one type of evaporator. Other mills have evaporator systems which use a combination of several types of units.

4.1.4.2 Emission Sources

The evaporation of spent sulfite liquor releases sulfur dioxide. The more acidic the cooking liquor, the more SO_2 is released during the evaporation process. For a multiple-effect vacuum evaporation plant, similar to those found in Kraft pulping operations, there are two potential emission sources. The vacuum system vent is the main emission point for evporator gases. And the hotwell is the main emission point for evaporator condensates.[15]

The hotwell is a shell and tube surface condensor used to reduce the amount of evaporator offgas by indirect condensation. The hotwell condensate may contain appreciable amounts of dissolved SO_2. This condensate is usually combined with the evaporator system condensate. Both points are considered minor, but do contribute to the total sulfur dioxide emissions from the mill.

4.1.5 Recovery Systems

4.1.5.1 Process Description

The type of recovery system and the type of liquor base are very closely related. In fact, the two greatest factors in the choice of a base appear to be the end use qualities of the pulp and the recovery system.[16] The amount of chemicals which can be recovered also depend on the base. For example, if a mill uses a magnesium base cooking liquor, the magnesium and sulfur can be recovered as magnesium oxide (MgO) and sulfur dioxide, respectively. On the other hand, for an ammonia base only the sulfur can be recovered, while the nitrogen is lost as molecular nitrogen (N_2). A small fraction of the ammonia is converted to nitrogen oxides (NO_x).

Not only are there different recovery systems for different bases, but there can also be different recovery system designs for a single base. Usually these designs vary as to the amount and type of heat recovery or the method of SO_2 removal. Heat can be recovered by producing steam, heating process water or evaporating spent liquor. Sulfur dioxide is usually removed by scrubbing the furnace flue gas in venturi scrubbers, packed bed absorbers or tray towers.

4.1.5.1.1 Magnesium Base Recovery Systems

A typical magnesium base recovery system is shown in Figure 4-2. Spent sulfite liquor (SSL) is fed into a combination recovery boiler. Depending on the solids content of the SSL, supplemental fuel (oil or natural gas) may be

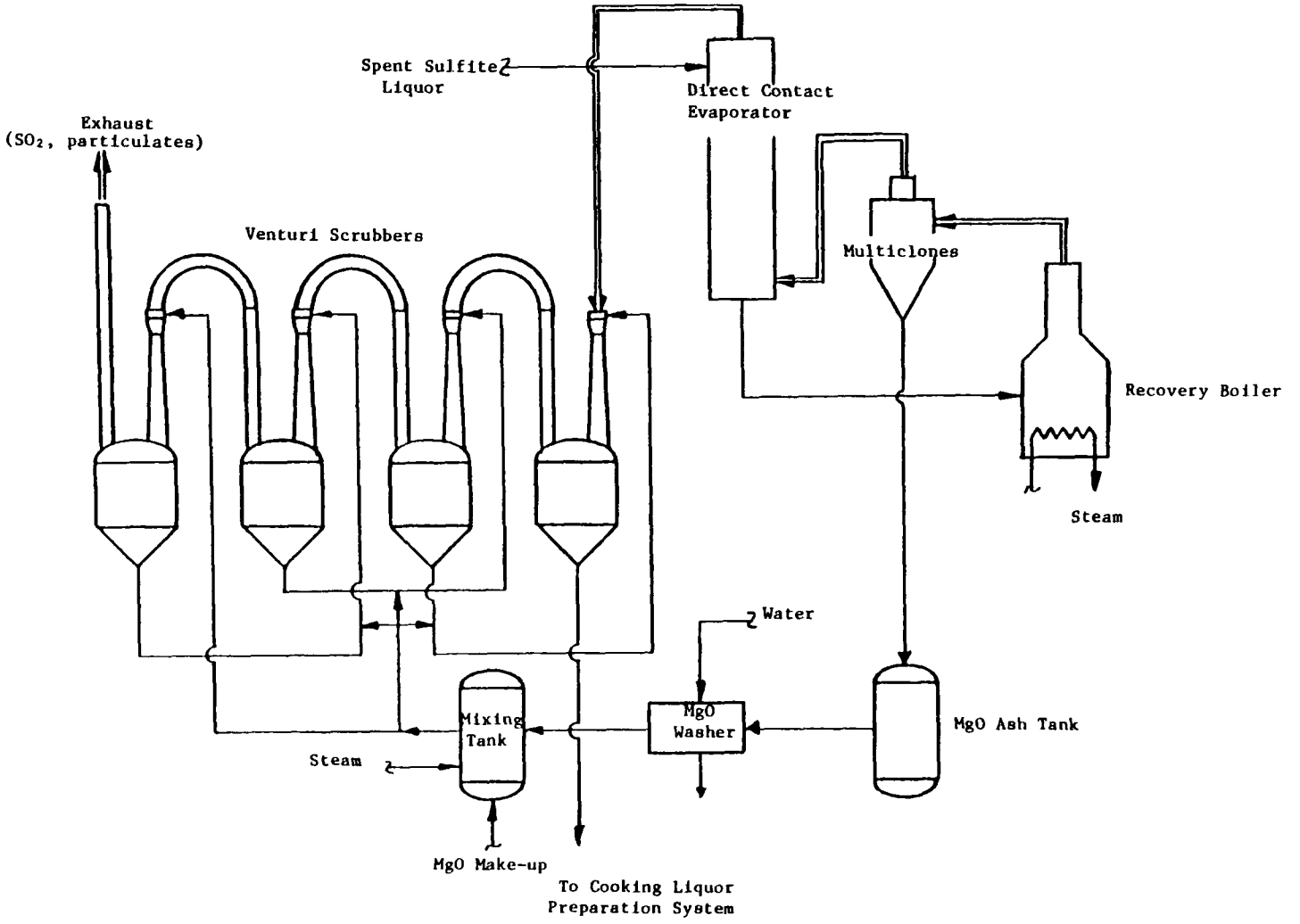

Figure 4-2. Magnesium base recovery system. (Potential pollutants shown in parenthesis)

70-1256-1

necessary to support combustion. The magnesium and sulfur are oxidized to magnesium oxide and sulfur dioxide, respectively. Organic material is oxidized to carbon dioxide and water. Heat is recovered by the production of steam.

Recovery boiler flue gas is passed through a system of multiclones to collect the magnesium oxide. The collection efficiency is typically 98%.[17] The MgO is washed to remove soluble impurities such as Na^+, K^+, and $SO_4^=$ without significant loss of MgO. The magnesium oxide is then slaked in a mixing tank to produce magnesium hydroxide, $Mg(OH)_2$. The magnesium hydroxide is used as a scrubbing liquor in the flue gas venturi scrubbers which are located downstream of the direct contact evaporator. This evaporator is another means of heat recovery. Hot flue gas from the recovery boiler evaporates water from the spent sulfite liquor and increases the solids concentration prior to firing of the liquor.

Flue gas from the direct contact evaporator is then directed to a series of four venturi scrubbers for countercurrent SO_2 scrubbing with magnesium hydroxide. The magnesium hydroxide solution absorbs the sulfur dioxide to produce magnesium bisulfite ($Mg(HSO_3)_2$) which is used for cooking liquor preparation. In place of venturi scrubbers, some recovery systems use packed bed absorbers for SO_2 removal. Both types of systems are reported to have scaling problems with precipitated magnesium sulfite ("monosulfite").[18] If the $Mg(OH)_2$ concentration is increased, the SO_2 removal efficiency will also increase, but the scaling problem will become more severe. The build up of scale is alleviated by temporarily lowering the $Mg(OH)_2$ concentration or periodically washing the scurbbers with a low pH aqueous solution such as evaporator condensate. Built up scale is removed periodically by mechanical means.

4.1.5.1.2 Ammonium Base Recovery Systems

For an ammonium base mill, the only chemical recovered is sulfur dioxide. Most of the nitrogen in the spent sulfite liquor is present in the form of ammonium salts. Depending upon combustion conditions, the recovery furnace flue gas will contain nitrogen in a variety of forms. The gaseous forms include molecular nitrogen (N_2), nitrogen oxides (NO_x), and ammonia (NH_3). In addition, ammonium sulfite [$(NH_4)_2SO_3$] and ammonium sulfate [$(NH_4)_2SO_4$] may be present as particulates.[19]

A sample ammonium base recovery system is shown in Figure 4-3. The spent sulfite liquor is burned with supplemental fuel (natural gas or oil) when necessary. Heat is recovered through steam production. The flue gas is directed to some type of sulfur dioxide recovery system. The system may consist of a series of venturi scrubbers, packed bed absorbers, tray towers or any combination thereof. In the example illustrated in Figure 4-3, the SO_2 is absorbed by a recirculating solution of ammonium hydroxide (NH_4OH), which is distributed as a spray in a two stage absorber. A continuous bleed stream of ammonium bisulfite (NH_4HSO_3) is drawn from the bottom of the absorber and sent to the cooking liquor preparation system.

4.1.5.1.3 Calcium Base Recovery Systems

Calcium base sulfite pulping presents a special problem in relation to the recovery of cooking chemicals. When the spent calcium sulfite cooking liquor is combusted, the principal inorganic products are calcium carbonate ($CaCO_3$) and calcium sulfate ($CaSO_4$). These compounds do not lend themselves to the economic reprocessing of fresh cooking liquor. In addition, calcium salts, particularly calcium sulfate are known to cause equipment scaling problems, such as on evaporator surfaces. Therefore, the evaporation and burning of calcium base spent liquor has not been widely practiced in the

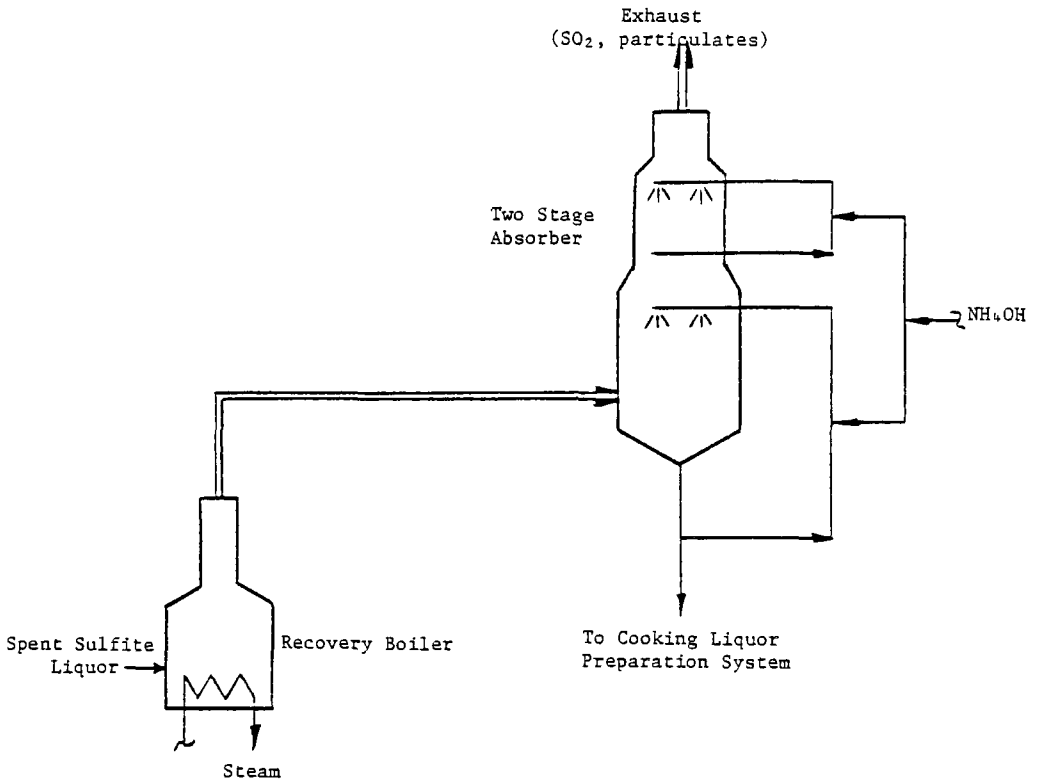

Figure 4-3. Ammonium base recovery system.
(Potential pollutants shown in parenthesis)

70-1257-1

United States. Instead, those calcium base mills still in operation have developed markets for essentially all of their spent liquor, either as a concentrated liquor or spray-dried solid.[20]

4.1.5.1.4 Sodium Base Recovery Systems

Sodium base recovery systems differ from the other types of recovery systems previously described in that the sodium is recovered in a smelt containing sodium sulfide (Na_2S) and sodium carbonate (Na_2CO_3). Several modern recovery systems are available, including the STORA process, the SCA-Billerud process, the Tampilla process, the Sivola-Lurgi process, and the Institute of Paper Chemistry method.[21]

The STORA process is very flexible and can be applied to various cooking methods. It offers a representative example of a sodium base recovery system. An outline of the STORA process is shown in Figure 4-4. Smelt from the recovery furnace is dissolved in water to produce a green liquor that is treated with CO_2 to remove hydrogen sulfide (H_2S). The bottoms from the carbonation tower contains sodium carbonate (Na_2CO_3) and sodium bicarbonate ($NaHCO_3$). This solution is treated with sodium bisulfite ($NaHSO_3$) to form sodium sulfite (Na_2SO_3) for cooking liquor preparation and CO_2 for recycle to the carbonation tower.

The bottoms of the sulfiting tower may be further fortified by scrubbing SO_2 from the recovery furnace flue gas. Some of the sodium sulfite is sent to a bisulfite tower for the production of sodium bisulfite either for cooking liquor preparation or for recycle to the sulfiting tower.

The hydrogen sulfide off-gas from the carbonation tower is sent to a Claus reactor for the production of liquid sulfur. This sulfur is burned to form SO_2 which is then purified for recycle to the Claus reactor. Some of the SO_2 is directed to the bisulfite tower for the production of sodium bisulfite.

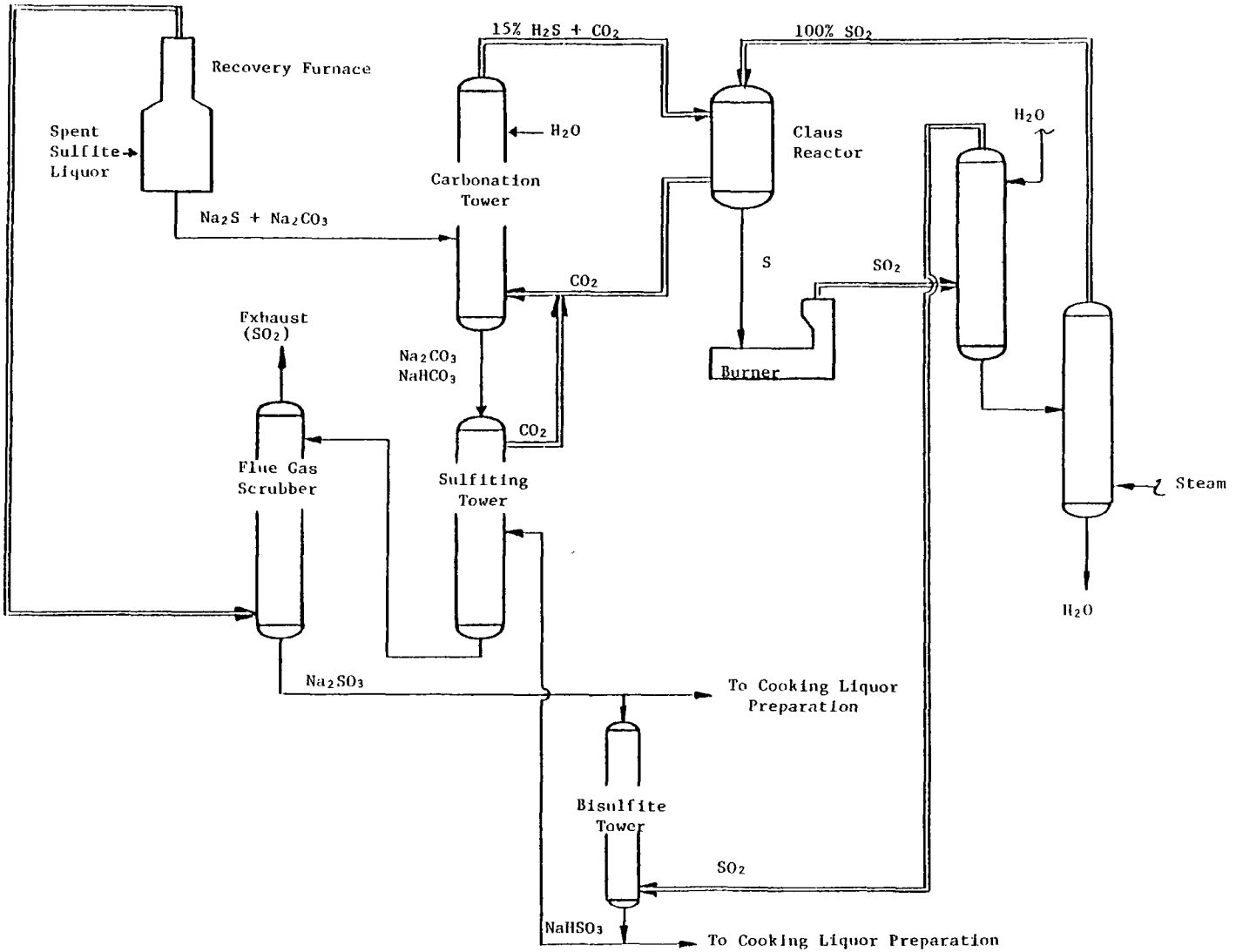

Figure 4-4. Stora sodium base recovery system.
(Potential pollutants shown in parenthesis)

70-1259-1

Depending on the pulping process requirements, a suitable cooking liquor can be prepared by mixing the proper proportions of sodium sulfite and sodium bisulfite. If a higher pH is needed as for semichemical pulping, some sodium bicarbonate can be bypassed directly to the sodium sulfite solution. These options for cooking liquor preparation characterize the STORA process as one of the more versatile sodium base recovery systems.

4.1.5.2. Emission Sources

Recovery systems are designed to incinerate spent sulfite liquor and to produce in a recoverable form the chemicals necessary to produce fresh cooking liquor. Except for sodium base recovery systems that generate a useable sodium smelt, all the chemicals are recovered from the recovery boiler/furnace flue gas. These chemicals may be either in a gaseous state, such as sulfur dioxide, or in a particulate form, such as magnesium oxide. Depending on the efficiency of a recovery system, trace amounts of these chemicals may pass through the system and be discharged to the atmosphere from the flue gas exhaust stack. In addition, the recovery systems are not specifically designed for the removal of other chemical species such as sulfates, which would also be discharged from the flue gas exhaust stack.

4.1.6 Liquor Preparation Systems

4.1.6.1 Process Description

The purpose of the liquor preparation system (also referred to as acid preparation) is to provide fresh cooking liquor for the digesters. For magnesium, ammonia, or sodium base systems, liquor preparation is very closely associated with the recovery system. The weak acid produced by SO_2 removal in the recovery system is used for the cooking liquor preparation. In many cases the recovery system and the liquor preparation system are so closely integrated that it is difficult to consider them as two distinct

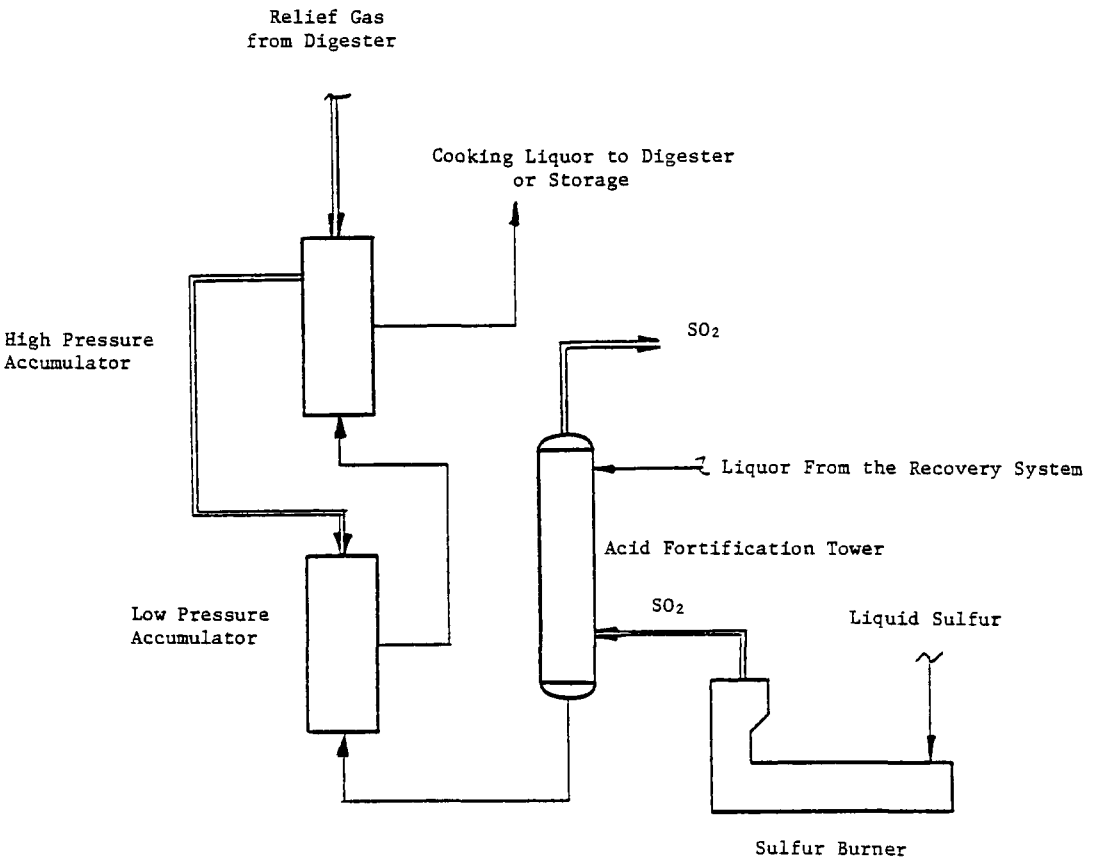

Figure 4-5. Liquor preparation system.

systems. The STORA sodium base recovery system described in Section 4.1.5.1.4 is a good example.

Cooking liquor preparation consists of fortifying weak acid liquor from the recovery system with additional sulfur dioxide, as shown in Figure 4-5. Liquid sulfur is burned to produce SO_2 which is then absorbed by the weak acid liquor in an acid fortification tower. Then, depending on the desired strength (pH) of the cooking liquor, it can be further fortified in a low pressure and/or high pressure accumulator. Accumulators are sprayed chambers where steam is condensed and SO_2 from process unit relief gases is absorbed for subsequent reuse in the cooking liquor.[22]

When preparing calcium base cooking liquors, water is substituted for the weak acid liquor usually supplied from the recovery system. The water is run countercurrent to SO_2 through a series of two or three Jenssen towers (absorbers) which are packed with limestone. The resulting calcium bisulfite liquor may then be fortified in one or more accumulators.

The final composition of a cooking liquor is determined by the amount of combined SO_2 and total SO_2. By definition, the amount of combined SO_2 is that amount of SO_2 theoretically equivalent to monosulfite, for example $CaSO_3$. Total SO_2 is the amount of combined SO_2 plus the amount of SO_2 as sulfurous acid (H_2SO_3). A typical cooking liquor for an acid calcium sulfite process will have a composition of approximately 1% combined SO_2 and 6% total SO_2.[23]

4.1.6.2 Emission Sources

The major emission source in the liquor preparation system is the acid fortification tower or Jenssen towers. The weak acid from the recovery system does not absorb all the sulfur dioxide passing through the tower. In some cases the excess SO_2 is sent to the recovery system for removal. In many instances, however, the acid fortification tower is vented directly to

the atmosphere.

The accumulators may also discharge vent gases containing SO_2 directly to the atmosphere. Many pulp mills have arranged a system of cascading SO_2 vent gases, i.e., digester to high pressure accumulator to low pressure accumulator to acid fortification tower. Still, several other mills have no such system and the accumulators vent directly to the atmosphere.

4.2 NEUTRAL SULFITE SEMICHEMICAL (NSSC) PROCESS

The pulping of wood by the neutral sulfite semichemical (NSSC) process actually involves two processes, a chemical action to partially free cellulosic fibers by lignin sulfonation and a mechanical action to completely free the fibers by friction and compression. Although NSSC pulping has been practiced for over forty years, the operations and equipment are not yet standardized to the extent of modern kraft pulping. In fact, many mills are tailor-made to meet particular circumstances.[24]

A generalized flow diagram for the NSSC process is shown in Figure 4-6. Wood chips are fed to a continuous digester for chemical attack on the cellulose-lignin complex. The partially pulped chips pass through a blow tank for liquor drainage and through presses for additional liquor removal. The chips are then fed to refiners for mechanical defibering and through washers and screens for rinsing and removal of unpulped material. The spent liquor is either recovered in systems similar to those used in the sulfite process or combined with the liquor used in the kraft process as a source of make-up chemicals.

4.2.1 Digesters

4.2.1.1 Process Description

Unlike the sulfite process, the most common type of digester in the

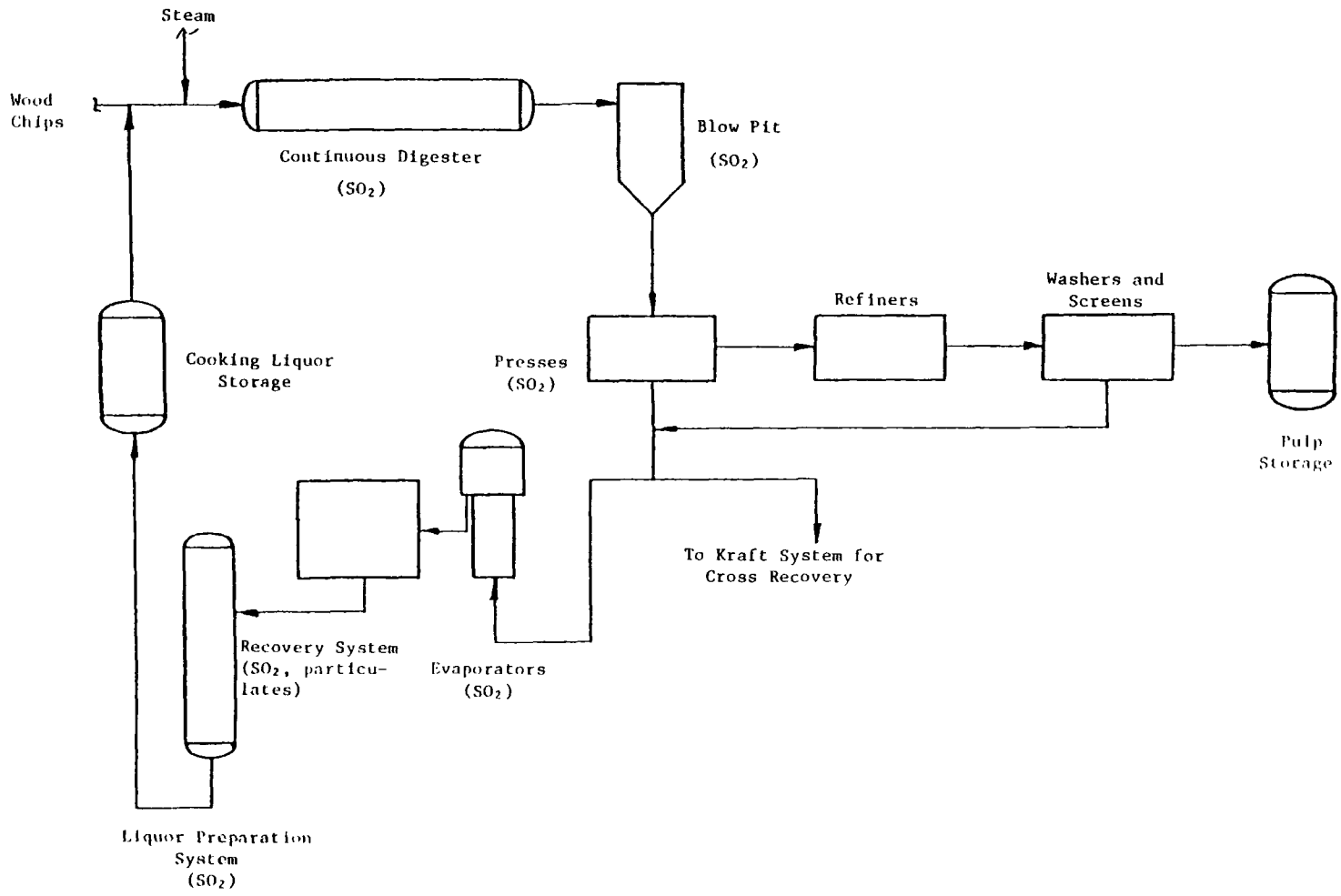

Figure 4-6. Generalized neutral sulfite semichemical (NSSC) process. (Potential pollutants shown in parenthesis)

70-1258-1

NSSC process is the continuous digester. There are several types of continuous digester designs based on a variety of inlet and outlet devices used to convey wood chips through the system. Operating conditions for these digesters are slightly more intense than the batch digesters described in Section 4.1.1.1. Temperatures and pressures may range from 160 to 185°C (320 to 365°F) and from 690 to 1100 kPa (100 to 160 psi), respectively.[25] Digestion time is considerably less for the NSSC process, usually on the order of thirty minutes to three hours. Pulping may be conducted in either the liquid or vapor phase. Although sodium is the most common cooking liquor base, magnesium and ammonia base liquors can also be used.[26]

Depending on the operating pressure, the partially pulped chips are discharged in a number of ways. Pressurized digesters will blow the chips through some type of pressure control valve into a blow tank. A digester operating at atmospheric pressure will normally have the chips scraped into a conveyor serving an orifice for discharge to a blow pit.

4.2.1.2 Emission Sources

The continuous digesters have two potential sources of atmospheric emissions: relief gases and blow gases. Both types of emissions might contain sulfur dioxide, but only in trace amounts. The relatively high pH of the cooking liquor (usually between 7 and 8) indicates that high SO_2 concentrations in these gases are very unlikely. Indeed, source test data for blow emissions at one NSSC mill estimated SO_2 emissions at 0.045g SO_2/kg of pulp production (0.09 lb/ton).[27]

For plants associated with kraft mills, digester relief and blow gases may also contain hydrogen sulfide, if green liquor is used in the cooking process. No sampling data is available to confirm the possibility.[28]

4.2.2 Blow Tanks

4.2.2.1 Process Description

For continuous digesters, blow tanks act as a hold tank where spent liquor can drain from the freshly discharged pulp slurry. The blow tanks are equipped with a leach caster with revolving arms and plows that work downward to sweep the cooked chips to an outlet. Pressurized digesters will generally blow into a cyclone where steam is separated. The cooked chips drop from the cyclone into tanks with live bottoms or into some other type of conveyance device for transport to the presses.

4.2.2.2 Emission Sources

Blow tank emissions result from the gases evolved during the discharge of partially pulped chips from the digesters. These emissions are expected to be very low and are discussed in Section 4.2.1.2.

4.2.3 Presses

4.2.3.1 Process Description

The partially pulped chips from the blow tank are normally deliquored, rinsed with white water from the paper machines, deliquored again, and then fed to the refiners. In addition, the presses are used to impart a beneficial prefiberizing action to the fibrous material. The total elapsed time for this operation is kept at a minimum in order to permit hot refining and to prevent possible pulp discoloration.

4.2.3.2 Emission Sources

At this point in the pulping process most of the spent liquor has been removed and the presses are not considered a potential source of atmospheric emissions.

4.2.4 Refiners

4.2.4.1 Process Description

The purpose of the refiners is to provide the mechanical action by which the cellulosic fibers in the partially pulped chips are finally freed. Although several models of refiners are currently in commercial use, the most common are based on variations of the single rotating disc type. Cast alloy plates are bolted to a refiner disc and they form the refining surface. The discs are powered to speeds of 600 to 1800 rpm by synchronous or induction motors of up to 11 kW (1500 hp).[29] The result is a combination of frictional and centrifugal actions that weakens the fiber bonds causing the partially pulped chips to disintegrate first into fiber bundles and eventually into individual fibers. The pulp is then ready for final washing and screening.

4.2.4.2 Emission Sources

The refiners are not considered a potential source of atmospheric emissions.

4.2.5 Washers and Screens

4.2.5.1 Process Descriptions

The washers and screens are used to rinse the pulp and remove any remaining chips which are only partially cooked. The accepted pulp is sent on for further processing, usually into corrugating medium, and the rejected pulp is returned to the refiners or digesters. Wash wastewater is combined with the spent cooking liquor for treatment or disposal.

4.2.5.2 Emission Sources

The washers and screens are not considered a potential source of atmospheric emissions.

4.2.6 Disposal of Spent Cooking Liquor

4.2.6.1 Process Description

In the NSSC process, spent cooking liquor may be disposed of in one of two ways: transfer to an associated kraft pulping process or evaporation and incineration for recovery of chemicals in systems very similar to those used in the sulfite process. Those mills that are operated in association with a kraft process will mix the spent sulfite liquor with the kraft cooking liquor as a means of sodium and sulfur chemical makeup. In this case, the NSSC process is considered to be free of emissions normally associated with the disposal of spent cooking liquor as the chemicals are now part of another process.

For those mills that recover heat and chemicals from the spent cooking liquor, the systems are almost identical to those designed for the sulfite process. The liquor is evaporated and incinerated, and the cooking liquor chemicals are recovered, when possible, to regenerate a fresh cooking liquor For sodium base systems, an alternate route to the typical smelt-producing incinerator is combustion in a fluidized bed. In this technique the liquor is evaporated to about 35% solids and sprayed into the furnace for combustion at about 660°C (1220°F). The inorganic products are mostly sodium sulfate with a little sodium carbonate. These inorganic products form pellets that compose the fluidized bed. A portion of the bed is continuously withdrawn from the bottom of the bed to balance the incoming feed. The pellets cannot be reused for preparing fresh cooking liquor and are usually sold to a sulfate mill.[30]

4.2.6.2 Emission Sources

For an integrated NSSC-kraft pulping operation, there will be no atmospheric emission sources attributed to the NSSC process. If chemical

recovery is practiced, then potential emission sources will include the evaporator gases and the recovery system exhaust. Of these two sources, the recovery system exhaust is the most significant. In many cases the evaporator gases are vented to the recovery system, so there is only a single source. The exhaust stack may be the source of SO_2 and particulate emissions.

4.2.7 Liquor Preparation System

4.2.7.1 Process Description

The methods of preparing NSSC cooking liquor are comparable to those used in sulfite pulping. The major exception is the difference in liquor pH levels. Since the NSSC cooking liquor is designed for neutral pH levels (7 to 8), acid fortification equipment is unnecessary. Cooking liquor can be freshly prepared by contacting a sodium hydroxide solution with SO_2 from a sulfur burner. The contacting equipment can be a packed bed absorber or tray tower. If cross recovery is practiced, then fresh cooking liquor must be continuously prepared.

However, if a recovery system is employed for spent liquor disposal then cooking chemicals can be recycled. A good example is the STORA process described in Section 4.1.5.1.4. If the cooking base is ammonia, fresh ammonium hydroxide make-up is required because of the combustion of ammonia in the recovery system.

4.2.7.2 Emission Sources

The major emission source in cooking liquor preparation is the packed bed or tray tower used for absorbing SO_2. These absorbers can be operated at low SO_2 loadings and high efficiencies to produce a neutral sulfite cooking liquor. One mill reports operating a packed bed absorber at 99.9% efficiency and measuring typical SO_2 concentrations of 5 to 15 ppm in the off-gas.[31]

REFERENCES

1. Linero, A. Background Document: Acid Sulfite Pulping, Final Report. Environmental Science and Engineering, Inc. Gainesville, Florida. EPA-450/3-77-005, PB 264 301, EPA Contract No. 68-02-1402. January 1977. p. 4.

2. Compilation of phone surveys. Radian Corporation. Austin, Texas.

3. Sulfite Pulping, Emissions and Control. A Background Report for Sulfite Pulp Mill Regulations. Oregon Department of Environmental Quality, Air Quality Control Division. p. 2.

4. Britt, K. W., ed. Handbook of Pulp and Paper Technology, revised second edition. New York, Van Nostrand Reinhold, 1970. p. 160.

5. Linero, A. Background Document: Acid Sulfite Pulping, Final Report. Environmental Science and Engineering, Inc. Gainesville, Florida. EPA-450/3-77-005, PB 264 301, EPA Contract No. 68-02-1402. January 1977. p. 5.

6. Sulfite Pulping, Emissions and Control. A Background Report for Sulfite Pulp Mill Regulations. Oregon Department of Environmental Quality, Air Quality Control Division. p. 10.

7. Environmental Pollution Control, Pulp and Paper Industry, Part 1, Air. Environmental Protection Agency, Office of Technology Transfer. EPA 625/7-76-001. October 1976. p. 14-17.

8. Sulfite Pulping, Emissions and Control. A Background Report for Sulfite Pulp Mill Regulations. Oregon Department of Environmental Quality, Air Quality Control Division. p. 5.

9. Environmental Pollution Control, Pulp and Paper Industry, Part 1, Air. Environmental Protection Agency, Office of Technology Transfer. EPA 625/7-76-001. October 1976. p. 14-17.

10. Sulfite Pulping, Emissions and Control. A Background Report for Sulfite Pulp Mill Regulations. Oregon Department of Environmental Quality, Air Quality Control Division. p. 16.

11. Linero, A. Background Document: Acid Sulfite Pulping, Final Report. Environmental Science and Engineering, Inc. Gainesville, Florida. EPA-450/3-77-005, PB 264 301, EPA Contract No. 68-02-1402. January 1977. p. 7.

12. Environmental Pollution Control, Pulp and Paper Industry, Part 1, Air. Environmental Protection Agency, Office of Technology Transfer. EPA 625/7-76-001. October 1976. p. 14-17.

13. Considine, D. M., ed. Chemical and Process Technology Encyclopedia. New York, McGraw-Hill, 1974. p. 451.

14. Micheletti, W. C. and C. M. Thompson. Trip report, Boise Cascade, Salem, Oregon. Radian Corporation. Austin, Texas. June 22, 1978.

15. Environmental Pollution Control, Pulp and Paper Industry, Part 1, Air. Environmental Protection Agency, Office of Technology Transfer. EPA 625/7-76-001. October 1976. p. 14-17.

16. Britt, K. W., ed. Handbook of Pulp and Paper Technology, revised second edition. New York, Van Nostrand Reinhold, 1970. p. 169.

17. Micheletti, W. C. and C. M. Thompson. Trip report, Publishers Paper Co., Oregon City, Oregon. Radian Corporation. Austin, Texas. June 22, 1978.

18. Sulfite Pulping, Emissions and Control. A Background Report for Sulfite Pulp Mill Regulations. Oregon Department of Environmental Quality, Air Quality Control Division. p. 12.

19. Environmental Pollution Control, Pulp and Paper Industry, Part 1, Air. Environmental Protection Agency, Office of Technology Transfer. EPA 625/7-76-001. October 1976. p. 14-27.

20. Britt, K. W., ed. Handbook of Pulp and Paper Technology, revised second edition. New York, Van Nostrand Reinhold, 1970. p. 168.

21. Environmental Pollution Control, Pulp and Paper Industry, Part 1, Air. Environmental Protection Agency, Office of Technology Transfer. EPA 625/7-76-001. October 1976. p. 14-22.

22. Sulfite Pulping, Emissions and Control. A Background Report for Sulfite Pulp Mill Regulations. Oregon Department of Environmental Quality, Air Quality Control Division. p. 5.

23. Standen, Anthony, ed. Kirk-Othmer Encyclopedia of Chemical Technology, volume 16, revised second edition. New York, Wiley, 1968. pp. 714.

24. Britt, K. W., ed. Handbook of Pulp and Paper Technology, revised second edition. New York, Van Nostrand Reinhold, 1970. p. 200-201.

25. Britt, K. W., ed. Handbook of Pulp and Paper Technology, revised second edition. New York, Van Nostrand Reinhold, 1970. p. 204.

26. Standen, Anthony, ed. Kirk-Othmer Encyclopedia of Chemical Technology, volume 16, revised second edition. New York, Wiley, 1968. p. 702.

27. Micheletti, W. C. and C. M. Thompson. Trip report, Longview Fibre Company, Longview, Washington. Radian Corporation. Austin, Texas. June 21, 1978.

28. Compilation of Air Pollutant Emission Factors, second edition, supplement seven. Environmental Protection Agency. Research Triangle Park, North Carolina. AP-42. April 1977. p. 10.1-9.

29. Britt, K. W., ed. Handbook of Pulp and Paper Technology, revised second edition. New York, Van Nostrand Reinhold, 1970. p. 160.

30. Standen, Anthony, ed. Kirk-Othmer Encyclopedia of Chemical Technology, volume 16, revised second edition. New York, Wiley, 1968. p. 701.

5.0 EMISSION CONTROL SYSTEMS

The sulfite wood pulping process typically results in two types of atmospheric emissions: sulfur dioxide and particulates. Unlike the kraft pulping process, there are no foul odors emitted because volatile reduced sulfur compounds are not products of the lignin-bisulfite reaction. However, when an ammonium base cooking liquor is used, the possibility of ammonia and nitrogen oxide (NO_x) emissions from the recovery system does exist. Only a limited amount of information is available on these emissions,[1] but they are not considered to be major pollutants.[2]

5.1 CONTROL OF SULFUR DIOXIDE EMISSIONS

Atmospheric emissions of sulfur dioxide are from four major sources: digester relief vent, blow pit vent, recovery system exhaust, and liquor preparation system. The first two sources are a direct result of the actual pulping process. The last two sources are associated with the production of fresh cooking liquor. In addition, there are other minor SO_2 emission sources, most notably the washers and screens, and the evaporators.

5.1.1 Digester Relief Vent

During the pulp cooking cycle small amounts of gas and liquor are intermittently removed from the digester. This relief of gas and liquor maintains constant cooking conditions in the digester and ensures the production of a uniform quality pulp. The digester relief gas contains

high concentrations of SO_2 and is a major source of SO_2 emissions when vented directly to the atmosphere.

Usually one of two process changes is made to effectively control emissions from the digester relief vent. The relief gases may be directed to a high or low pressure accumulator so that the SO_2 may be recycled to fresh cooking liquor. After passing through the accumulators, the relief gases may be sent to the recovery system so that the SO_2 is absorbed in the weak acid liquor which is eventually used for the production of fresh cooking liquor.

Another means of controlling SO_2 emissions from the digester relief vent is to direct the relief gases to a scrubber specially designed for that purpose. This approach may not be practical for some mills since it can be difficult to design a scrubber that will efficiently remove appreciable amounts of SO_2 from intermittent quantities of gas. On the other hand, for a large mill which may be operating several digesters simultaneously, the feed gas to the scrubber is much more uniform in composition and flow rate.

5.1.2 Digester Blow

Perhaps the largest single source of sulfur dioxide emissions is the digester blow. When the cooking cycle is complete, the hot pulp is forced under pressure from the digester into a blow pit. The hot, pressurized spent cooking liquor flashes during the blow, releasing large quantities of steam and sulfur dioxide. These emissions can be reduced either by collecting and scrubbing the blow gases or by modifying the pulp discharge operation to prevent liquor flashing.

Controlling SO_2 emissions with a scrubber offers a definite advantage

in that it requires little or no alteration to the existing digesters and blow tanks. The entire area would need to be completely enclosed for the collection of blow gases. However, this should not be a problem unless the plant layout imposes unusually strict space limitations. The major problem with this control method is proper scrubber design. A blow will last only a few minutes with the peak flows and concentrations lasting only five to six minutes.[3] Therefore, a scrubber must be designed for a maximum gas and vapor flow which is many times the average gas flow, and likewise for peak concentrations of SO_2.

An additional problem is the slurry used for an absorbing medium. The obvious choice for any given mill is an alkaline solution of the cooking liquor base used at that mill. For example, a magnesium base mill would use a magnesium hydroxide slurry for scrubbing SO_2. To do otherwise would only create another pollution problem, disposal of the scrubber effluent. Of the four chemical bases, sodium appears to be the best suited for scrubbing. Both magnesium and calcium require cumbersome slurry systems.[4] And the use of ammonium hydroxide may result in the emission of ammonia or of an ammonium sulfite particulate.[5] Yet even with these problems, SO_2 recovery efficiencies are reported to be as high as 97% for this type of control.[6]

Recently, many pulp mills have been modifying the pulp discharge operation in an effort to reduce sulfur dioxide emissions. The basic principle is to prevent liquor flashing by reducing the temperature and pressure of the pulp/liquor slurry prior to discharge. Two of the most common modifications are the low pressure blow or dump system and the pump-out system.

The low pressure blow or dump system involves lowering the digester pressure to nearly the atmospheric level and then discharging the pulp into a dump tank located directly beneath the digester. In some instances all or part of the hot spent cooking liquor may be drained from the digester and replaced by cooler water from the pulp washers. This lowers the pulp temperature and reduces the steam flashing on discharge. Emissions from dump tanks have been reported to be under 0.005 g/kg of pulp (0.01 lb/ton) at one mill.[7]

There are several significant problems associated with the low pressure blow or dump system. First, there is the problem of relief gases. In order to lower the digester pressure to near atmospheric, digester gases containing large amounts of SO_2 must be withdrawn and sent to appropriate treatment units. If the gases are vented to the recovery system or the liquor preparation system, such large intermittent doses may upset the efficiency of that particular system. Secondly, there is the problem of sunken dump tanks. Most of the sulfite mills currently operating were originally built with blow pits that are not located directly beneath the digester. Therefore, using a low pressure dump would require major equipment modifications, assuming there was allowable space. Finally, there is the problem of reduced capacity. This type of pulp discharge is more time consuming than a high pressure blow and consequently increases the time requirement for use of a digester.

In the pump-out system, the digester pressure is relieved to nearly the atmospheric level and then the pulp/liquor slurry is pumped from the

digester into a closed storage vessel. Since the system is completely enclosed, all relief and vent gases can be collected and SO_2 emissions from the discharge of pulp are kept at a minimum. In some instances all or part of the spent cooking liquor may be withdrawn and replaced with water from the pulp washers to cool the pulp.

The pump-out system has problems very similar to those associated with the dump system. Although all relief and vent gases are collected, there may still be the problem of proper treatment. Equipment modification is not nearly as drastic for the pump-out system. The pulp storage tanks, which serve the same purpose as a dump tank, do not need to be located directly beneath the digesters. The pumps can be sized to transfer the pulp/liquor slurry to storage tanks located at any level in the plant. As before, there will also be a loss of pulping capacity due to the increased time required for pulp discharge. A mill in Oregon which has gone to the pump-out system, has had to increase their number of digesters from six to eight in order to maintain their original capacity.[8]

Determining which type of SO_2 control method is economically best is very difficult. Cost information is extremely limited and subject to a number of factors that vary from mill to mill, such as plant layout, age of equipment, and cooking liquor base. A report published by the Oregon State Department of Environmental Quality states that, on the surface, scrubbers, dump systems, and pump-out systems appear to have comparable costs.[9]

5.1.3 Recovery System Exhaust

The recovery system is inherently a pollution control system. It is

designed to reduce water pollution by providing an alternate means of disposal for spent sulfite liquor. The recovery system is made economically attractive by its ability to recover expensive chemicals necessary for the preparation of fresh cooking liquor. With the exception of sodium base liquors, all recovery systems are designed to recover sulfur as sulfur dioxide from the recovery furnace flue gas. Depending on the efficiency of SO_2 removal, large quantities of sulfur dioxide can be emitted from the recovery system exhaust stack.

The current method of recovering SO_2 is to pass the flue gas through a multistage system of absorbers or venturis and scrub the gas with an alkaline solution. Theoretically, if the scrubbers were made large enough and enough alkaline solution were used, SO_2 exhaust emissions could be reduced to zero. Practically, however, this would result in a scrubber slurry effluent of too great a quantity and too dilute a concentration to be of any use in cooking liquor preparation.

Hence, the best means of controlling SO_2 emissions from the recovery system exhaust is the proper operation of a well designed scrubber system. This does not preclude the addition of another scrubber to an already existing recovery system. Depending on SO_2 control measures implemented at other emission sources in the mill, the recovery system scrubbers may become overtaxed. For example, if digester relief and blow gases are vented to the recovery system, an additional scrubber may be necessary to avoid a system upset from the sudden surge in SO_2 laden gases.

The scrubber system design will depend primarily on the type of alkaline scrubbing medium. Calcium hydroxide and magnesium hydroxide are considered

rather cumbersome slurries because of their tendency to scale. Therefore, when using these bases, venturi scrubbers are preferred for their induced slurry turbulence. Even so, some mills have reported continued scaling problems with venturis.[10] On the other hand, ammonium hydroxide and sodium hydroxide are somewhat easier to handle and may be effectively used in towers packed with an inert matrix or fitted with a number of perforated plates. Because of high costs, SO_2 recovery has been limited to 50 to 80 percent depending on the base and recovery system.[11] However, SO_2 recovery as high as 95 percent has been reported for mills operating under strict environmental regulations.[12]

5.1.4 Liquor Preparation System

Sulfur dioxide emissions from the liquor preparation system can be appreciable since the purpose of this system is to produce fresh cooking liquor by fortifying weak acid liquor with SO_2. The major emission source is the acid fortification tower which may vent large amounts of SO_2 directly to the atmosphere. These emissions can be reduced by proper equipment design and operation to ensure almost complete absorption of SO_2 by the weak acid liquor. Any tower offgas containing significant amounts of SO_2 can then be directed to the recovery system for removal or to an additional scrubber.

In addition to the acid fortification tower, the accumulators also have offgas vents that are sometimes released directly to the atmosphere. These emissions are best controlled by cascading the vent gases from one process unit to another. For instance, relief gases from the digester are directed to the high pressure accumulator in which portions of SO_2 are redissolved in fresh cooking liquor. The high pressure accumulator will, in turn, vent to the low pressure accumulator, which will subsequently vent

to the acid fortification tower. At each step along the cascade of units, some SO_2 is redissolved in the freshly prepared cooking liquor. Offgas from the acid fortification tower is ultimately sent to the recovery system for removal of remaining SO_2.

5.1.5 Minor Emission Sources

The washers and screens, and the evaporators are usually considered minor SO_2 emission sources. However, if other major sources are well controlled, these sources can contribute an appreciable fraction of the overall emissions. In many cases these sources are uncontrolled.

Two major control options are available for reducing the emissions from stock washers and screens. In both options, vapors from the washers and screens are collected in hoods and removed from the work areas by fans. If the hoods are close fitting, then the total gas flow rate will be low and the vapors will contain considerable amounts of SO_2. In such cases, it is usually practical to send the vapors to the SO_2 scrubbers in the recovery system. On the other hand, if the total gas flow rate is high, then the SO_2 vapors will be relatively dilute. Under these circumstances, the best control is to pass the gas through a water wash column (often referred to as a nuisance tower) for SO_2 removal before venting to the atmosphere.

5.2 CONTROL OF PARTICULATE EMISSIONS

The only source of particulate emissions is the recovery system exhaust stack. Depending on the chemical base of the cooking liquor, the nature of these emissions can vary. For each base, however, the major particulates are sulfates and any contaminants that were introduced into the system by the wood chips.

The most common means of controlling these emissions is to pass the recovery system flue gas through a demister prior to exhaust. Although demisters have proven to be very efficient, they can also pose a considerable maintenance problem. Demisters will plug quite often, particularly when burning supplemental fuel oil in the recovery incinerator.[13] In addition, the pressure drop across the demisters can be considerable, so that fans with high energy motors are required.

Another potential means of controlling particulates is the use of electrostatic precipitators. Some kraft mills successfully use electrostatic precipitators for the removal of fly ash from recovery furnace exhaust. Removal efficiencies are typically very high (99+%), but the capital and operating costs for these units are also high. As of yet, there is no indication that electrostatic precipitators will be implemented in the sulfite or NSSC pulping sector.

5.3 CANDIDATE BEST CONTROL SYSTEMS

Since each mill is unique in its application of the sulfite or neutral sulfite semichemical pulping process, no single best control system can be defined for the control of atmospheric emissions. Instead, the process design and control requirements for each mill must be reviewed on a case by case basis. The exact emission control strategy for a particular mill will depend on the age and type of equipment currently in use, the type of cooking liquor, the availability of space to retrofit or add equipment, and the associated capital and operating costs. A few mills in the Pacific Northwest have installed the best control systems for their specific operation. Information concerning these control systems is presented in Table 5-1. In addition, some generalizations concerning candidate best control systems are discussed below.

Table 5-1. SULFITE MILLS WITH CANDIDATE BEST CONTROL SYSTEMS

MILL	PERSONNEL TO CONTACT FOR FURTHER INFORMATION	CANDIDATE BEST CONTROL SYSTEM
Boise Cascade Corporation Salem, Oregon	Mr. Bill Gray Technical Director 315 Commercial St. S. Salem, Oregon 97301 (503) 362-2421	Mist eliminator to reduce particulate emissions. (This mill operates under air emissions limitations more stringent than those for any other mill in the United States.) Pulp pump-out system to reduce digester discharge emissions.
Georgia-Pacific Corp. Bellingham, Washington	Mr. J. H. Dunkak V.P. and General Manager P. O. Box 1236 Bellingham, Washington 98225 (206) 733-4410	Scrubber system to treat digester blow and relief emissions and acid plant emissions.
Publishers Paper Newberg, Oregon	Mr. P. J. Delekto Technical Director P. O. Box 70 Newberg, Oregon 97132 (503) 538-2151	Scrubber system to treat digester blow and relief emissions.
Oregon City, Oregon	Mr. Rodney Schmall Manager of Environmental Services 419 Main Street Oregon City, Oregon 97045 (503) 656-5211	Pulp pump-out system and scrubber to reduce digester discharge emissions
Weyerhaeuser Company Cosmopolis, Washington	Mr. K. R. Devones Technical Director P. O. Box 280 Cosmopolis, Washington 98537 (206) 532-7110	Overall process control to reduce emissions

5.3.1 Digester Relief Vent

From an economic standpoint, probably the best means of controlling emissions from the digester relief vent is to direct these gases to the recovery system or liquor preparation system. This method of control requires minimal process alteration and capital investment. However, care must be taken not to overload the design capacities for either the recovery system or the liquor preparation system. If these systems are unable to handle the digester relief gases, the next best control method is the installation of a scrubber. Reported emissions for the two control methods are comparable.

5.3.2 Digester Blow

Digester blow emissions can be controlled either by collecting blow gases for scrubbing or by reducing blow gases by discharge modifications. Scrubbing usually requires complete enclosure of the digester blow area and installation of a new scrubber. Pulp discharge modifications require considerable equipment alterations for pressure relief, cooling liquid addition, and possible pulp pump-out. In addition, pulp discharge modifications increase digester turnaround time and consequently decrease mill production. While neither control system is economically attractive, both systems achieve similar emissions reductions.

5.3.3 Recovery System Exhaust

The best means of controlling SO_2 emissions from the recovery system exhaust is the proper operation of a well designed scrubber system. For recovery systems which accept digester relief and blow gases, an additional scrubber may be necessary to avoid a system upset from the sudden surge in SO_2 laden gases.

The best means of controlling particulate emissions from the recovery system stack is to install a demister prior to flue gas exhaust. Demisters may also aid in increased SO_2 removal.

5.3.4 Liquor Preparation System

The best means of controlling emissions from the liquor preparation system is proper design and operation. Such a system would consist of an acid fortification tower capable of almost complete absorption of SO_2 by the weak acid liquor. This result may be achieved by placing two towers in series. The system would also be designed for cascading of process unit vent gases to prevent any atmospheric release of SO_2.

The SO_2 emissions from the liquor preparation system in a calcium base mill are usually higher than other sulfite mills. These mills are continuously preparing fresh cooking liquor without the benefit of a weak acid recycle stream from the recovery system. Therefore, it may be necessary to install a caustic scrubber for treating offgas from the acid preparation tower in calcium base mills.

REFERENCES

1. Environmental Pollution Control, Pulp and Paper Industry, Part 1, Air. Environmental Protection Agency, Office of Technology Transfer. EPA 625/7-76-001. October 1976. p. 14-28.

2. Compilation of Air Pollutant Emission Factors, second edition, supplement seven. Environmental Protection Agency. Research Triangle Park, North Carolina. AP-42. April 1977.

3. Sulfite Pulping, Emissions and Control. A Background Report for Sulfite Pulp Mill Regulations. Oregon Department of Environmental Quality, Air Quality Control Division. p. 2.

4. Environmental Pollution Control, Pulp and Paper Industry, Part 1, Air. Environmental Protection Agency, Office of Technology Transfer. EPA 625/7-76-001. October 1976. p. 14-15.

5. Sulfite Pulping, Emissions and Control. A Background Report for Sulfite Pulp Mill Regulations. Oregon Department of Environmental Quality, Air Quality Control Division. p. 2.

6. Environmental Pollution Control, Pulp and Paper Industry, Part 1, Air Environmental Protection Agency, Office of Technology Transfer. EPA 625/7-76-001. October 1976. p. 14-15.

7. Sulfite Pulping, Emissions and Control. A Background Report for Sulfite Pulp Mill Regulations. Oregon Department of Environmental Quality, Air Quality Control Division. p. 8.

8. Micheletti, W. C. and C. M. Thompson. Trip report, Boise Cascade, Salem, Oregon. Radian Corporation. Austin, Texas. June 22, 1978.

9. Sulfite Pulping, Emissions and Control. A Background Report for Sulfite Pulp Mill Regulations. Oregon Department of Environmental Quality, Air Quality Control Division. p. 8.

10. Micheletti, W. C. and C. M. Thompson. Trip report, Publishers Paper Co., Oregon City, Oregon. Radian Corporation. Austin, Texas. June 22, 1978.

11. Environmental Pollution Control, Pulp and Paper Industry, Part 1, Air. Environmental Protection Agency, Office of Technology Transfer. EPA 625/7-76-001. October 1976. p. 14-20.

12. Linero, A. Background Document: Acid Sulfite Pulping, Final Report. Environmental Science and Engineering, Inc. Gainesville, Florida. EPA-450/3-77-005, PB 264 301, EPA Contract No. 68-02-1402. January 1977. p. 22.

13. Micheletti, W. C. and C. M. Thompson. Trip report, Boise Cascade, Salem, Oregon. Radian Corporation. Austin, Texas. June 22, 1978.

6.0 EXISTING EMISSIONS REGULATIONS

Only a few states have existing regulations designed specifically to limit the atmospheric emissions resulting from the pulping of wood by the sulfite or neutral sulfite semichemical processes. The purpose of this chapter is to provide an overview of those existing emissions regulations which will probably affect the sulfite and NSSC pulping industries. A complete listing of the current relevant state implementation plans for sulfur and particulate emissions is given in Tables 6-1 through 6-4. These tables present the state regulations as given in The Environment Reporter State Air Laws.[1] Consequently, the emissions limitations are in English units (lb/ton and lb/hr). To convert to metric units (g/kg and kg/hr), divide the corresponding English unit by 2.0 and 2.2, respectively.

6.1 EMISSIONS REGULATIONS FOR SULFITE PULPING

At present, ten states regulate sulfur emissions and six states regulate particulate emissions from the sulfite wood pulping process. Only four states (Alaska, New Hampshire, Oregon, and Washington) regulate both sulfur and particulate emissions. Five of the states which have sulfite mill regulations do not have any sulfite mills. Some of these states do have neutral sulfite semichemical mills and the sulfite mill regulations are probably applied to the NSSC mills.

For the most part, these regulations are designed to limit SO_2 emissions

from the digesters (or blows), recovery systems, and the mill in general (i.e., washer vents, storage tanks, etc.). SO_2 limitations are normally expressed as g SO_2/kg of air dried pulp (lb/ton) or ppm_v SO_2. The most restrictive regulations limit total SO_2 emissions from the mill to 4.5 g/kg of pulp (9.0 lb/ton). To meet these regulations, the mill would have to reduce uncontrolled emissions approximately 89%.

Particulate regulations apply only to recovery system exhaust stacks. The particulate limitations are typically expressed as g particulate/kg of air dried pulp (lb/ton). The most restrictive regulations limit particulate emissions from the recovery system exhaust stack to 1.0 g/kg of pulp (2.0 lb/ton). To meet these regulations, the mill would have to reduce uncontrolled emissions approximately 44%.

6.2 EMISSIONS REGULATIONS FOR NSSC PULPING

Currently three states regulate SO_2 emissions and four states regulate particulate emissions from the NSSC wood pulping process. Only two states (Alabama and Louisiana) regulate both sulfur and particulate emissions. Unlike the sulfite regulations, which are specifically designed for that process, the NSSC emissions limitations are closely associated with those limitations designated for the kraft process. These regulations probably represent an effort by the states to regulate two integrated processes as one. No states have implemented regulations specifically designed for NSSC pulping. However, the state of Washington is currently gathering data to determine the need and possible form for specific NSSC emissions regulations.[2]

6.3 ADDITIONAL RELEVANT REGULATIONS

In states which have not established specific regulations for the sulfite and NSSC pulping operations, these processes will probably be required to meet the emissions limitations designed for process units. These regulations normally determine the allowable emissions from an equation based on the process weight rate. The process weight rate is usually defined as the total weight of all materials introduced into the process, divided by that period of time (in hours) during which such materials are introduced into the process. Liquid and gaseous fuels, uncombined water and combustion air are excluded from the weight of materials introduced into the process. The process weight rate is usually calculated in kg/hr (ton/hr) and the allowable emissions are typically determined in g/hr (lb/hr). The extent to which these regulations are enforced with regard to sulfite and NSSC pulping operations is unknown.

Some states also have opacity regulations, usually based on the Ringleman number. With the exception of ammonia base systems, opacity requirements should not be a problem. However, for an ammonia base liquor, the recovery system exhaust stack may emit particulates of ammonium sulfate and ammonium sulfite that produce a blue haze. The extent to which opacity regulations are enforced with respect to sulfite and NSSC pulping operations is unknown.

Table 6-1 . STATE IMPLEMENTATION PLANS (SIP) FOR SULFUR EMISSIONS

State	Type of Pulping Process	Unit Type	Emissions Limitations: Existing Sources	Emissions Limitations: New Sources
Alabama	Kraft and neutral sulfite mills	Recovery furnaces, lime kilns, digestors, multiple effect evaporators	TRS $\leq$ 1.2 lb (expressed as H_2S dry)/ ton of air-dryed pulp	BPACT
Alaska	Sulfite mills	Blow pits, washer vents, storage tanks, digester relief and recovery systems	E $\leq$ 20 lb sulfur oxides (expressed as SO_2)/ton of pulp	Same as existing
		Recovery furnace stack	TRS $\leq$ 5 ppm (expressed as H_2S on a dry basis)	Same as existing
		Digesters and multiple effect evaporators (for non-condensibles)	TRS $\leq$ level obtained by the reduction achieved by thermal oxidation in a lime kiln	Same as existing
Arizona	Sulfite mills	Blow pits, washer vents, storage tanks, and digester relief and recovery systems	E $\leq$ 9 lb sulfur oxides (expressed as SO_2)/ air-dried ton of pulp produced	Same as existing
Arkansas		All industrial process units	E $\leq$ 0.2 ppm SO_2 (30 min. avg. outside premises)	Same as existing
California	See Table 6-3	California Sulfur Dioxide Regulations		
Colorado		Any process opening	E $\leq$ 500 ppm SO_2	
		Any process unit	E $\leq$ 5 tons SO_2/day	E $\leq$ 2 tons SO_2/day or BPACT
Connecticut	Sulfite mills	Blow pits, washer vents, storage tanks, digester relief, recovery system, etc.	E $\leq$ 9.0 lb/ton of air-dried pulp produced	Same as existing

(Continued)

Page Two
Table 6-1. (continued)

State	Type of Pulping Process	Unit Type	Emissions Limitations: Existing Sources	Emissions Limitations: New Sources
Delaware		Sulfur recovery operations	$E \leq 2000$ ppm by volume or $E \leq 2.5(P) + 300$ Where: E = emission (lb/hr) P = production rate (ton/day)	Same as existing
Florida			None	None
Georgia		Stacks < 90 feet	$E = 1.2(F)(hs)$	Same as existing
		Stacks $\geq$ 90 feet	$E = 4000(F)[(hs)/300]^3$ Where: E = emissions (lb SO_2/hr) hs = stack height (ft) F = 1 for noncombustion sources F = 2, 3 for combustion sources	Same as existing Same as existing
Hawaii			None	None
Idaho			None	None
Illinois		Any process source	$E \leq 2000$ ppm SO_2	Same as existing
Indiana		Noncombustion process sources	$E \leq 19.5\ (P)^{0.67}$ Where: E = emissions (lb SO_2/hr) P = total process capacity (ton/hr)	Same as existing
Iowa		Process units capable of emitting SO_2	$E \leq 500$ ppm SO_2 (based on volume)	Same as existing
Kansas			None	None

(Continued)

Page Three
Table 6-1. (continued)

State	Type of Pulping Process	Unit Type	Emissions Limitations: Existing Sources	Emissions Limitations: New Sources
Kentucky	Sulfite mills	Blow pits, washer vents, storage tanks, digester relief, recovery systems, etc.	E $\leq$ 9.0 lb/ton of air dried pulp produced	Same as existing
Louisiana	Kraft and neutral sulfite mills		E $\leq$ 2000 ppm SO_2 by volume at standard conditions	Same as existing
Maine	Sulfite mills		E $\leq$ 40 lbSO_2/air driedton of sulfite pulp produced	Same as existing
Maryland		All industrial process units	E $\leq$ 2000 ppm SO_2	E $\leq$ 500 ppm SO_2
Massachusetts		All industrial process units	E $\leq$ 500 ppm SO_2 and BACT	Same as existing
Michigan			None	None
Minnesota			None	None
Mississippi		All industrial process units	E $\leq$ 2000 ppm SO_2 by volume	E $\leq$ 500 ppm_v SO_2
Missouri			E $\leq$ 2000 ppm SO_2 by volume E $\leq$ 70 mg/m^3 of H_2SO_4 and/or SO_3 E $\leq$ 1000 lb SO_2/hr E $\leq$ 0.03 ppm H_2S (30 min avg) E $\leq$ 0.05 ppm H_2S (5 min avg)	E $\leq$ 500 ppm_v SO_2 E $\leq$ 35 mg/m^3 of H_2SO_4 and/or SO_3 E $\leq$ 1000 lb SO_2/hr E $\leq$ 0.03 ppm H_2S (30 min avg) E 0.05 ppm (5 min avg)
Montana			None	None
Nebraska		All industrial process units	Cannot exceed 1972 emissions	

(Continued)

Page Four
Table 6-1. (continued)

State	Type of Pulping Process	Unit Type	Emissions Limitations: Existing Sources	Emissions Limitations: New Sources
Nevada		All industrial process units	$E \leq 0.292(P)^{0.904}$ Where: E = emissions (lb/hr) P = total feed sulfur (lb/hr) When E < 10, then E ≤ 1000 ppm	Same as existing
New Hampshire	Sulfite mills		E ≤ 20 lb/air dried ton of sulfite pulp produced	Same as existing
New Jersey		All industrial process units	E < 2000 ppm SO_2	Same as existing
New Mexico			None	None
New York			None	None
North Carolina			None	None
North Dakota		All industrial process units	Maintain Ambient Air Quality Standards	Same as existing
Ohio	Sulfite mills		Total SO_2 ≤ 9 lb/ton of air dried pulp produced	Same as existing
Oklahoma	All pulp mills		Total SO_2 ≤ 18 lb/ton of air dried pulp produced (two hour avg)	Same as existing
Oregon	Sulfite mills	Blow system	SO_2 ≤ 0.2 lb/min/ton of unbleached pulp charged to digester (15 min avg)	Same as existing
		Recovery system	SO_2 ≤ 800 ppm (hourly avg)	
		Total Daily	SO_2 ≤ 20 lb/ton of air dried unbleached pulp produced	

(Continued)

Page Five
Table 6-1. (continued)

State	Type of Pulping Process	Unit Type	Emissions Limitations: Existing Sources	Emissions Limitations: New Sources
Pennsylvania		All industrial process units	E $\leq$ 500 ppm SO_2 by volume (dry)	Same as existing
Rhode Island			None	None
South Carolina			None	None
South Dakota		All industrial process units	Maintain Ambient Air Quality Standards	Same as existing
Tennessee	Class I County	All industrial process units	E $\leq$ 500 ppm SO_2 (dry; one hr avg)	Same as existing
	Class II, III Counties	All industrial process units	E $\leq$ 1000 ppm SO_2 (dry; one hr avg)	
	Class IV, V, VI Counties	All industrial process units	E $\leq$ 2000 ppm SO_2 (dry; one hr avg)	
Texas		All industrial process units	SO_2 $\leq$ 0.4 ppm (net ground level concentration; 30 min avg)	Same as existing
		All industrial process units	H_2S $\leq$ 0.08 ppm (net ground level concentration; 30 min avg)	Same as existing
Utah		All industrial process units	Maintain primary and secondary Ambient Air Quality Standards	Same as existing
Vermont			None	None
Virginia		All industrial process units	E < 2000 ppm SO_2 by volume	Same as existing
Washington	Sulfite mills	Mill practicing SSL incineration	Total Daily SO_2 $\leq$ 20 lb/ton ADU pulp	Same as existing
		Mill not practicing SSL incineration	Total Daily SO_2 $\leq$ 4 lb/ton ADU pulp	Same as existing
		Blow system	SO_2 $\leq$ 0.2 lb/min/ton of unbleached pulp charged to digester (15 min avg)	Same as existing
		Recovery system and acid plant	SO_2 $\leq$ 800 ppm (dry; hourly avg)	SO_2 $\leq$ 200 ppm (dry; hr avg)
		Recovery system and acid plant in areas of special need	SO_2 $\leq$ 300 ppm (dry; hourly avg)	

(C o n t i n u e d)

Page Six
Table 6-1. (continued)

State	Type of Pulping Process	Unit Type	Emissions Limitations	
			Existing Sources	New Sources
West Virginia		All industrial process units	$SO_2 \leq 2000$ ppm by volume	Same as existing
Wisconsin			None	None
Wyoming			None	None

BPACT: Best Practical Available Control Technology

BACT: Best Available Control Technology

Table 6-2 . STATE IMPLEMENTATION PLANS (SIP) FOR PARTICULATE EMISSIONS

State	Type of Pulping Process	Unit Type	Emissions Limitations: Existing Sources	Emissions Limitations: New Sources
Alabama	Kraft and neutral sulfite mills	Recovery furnaces	$E \leq 4.0$ lb/ton of pulp	BPACT
		Smelt dissolver vents	$E \leq 0.5$ lb/ton	BPACT
		Lime kilns	$E \leq 1.0$ lb/ton of pulp	BPACT
Alaska	Kraft and sulfite pulp mills	Blow pits, washer vents, storage tanks, digester relief and recovery systems	$E \leq 2.0$ lb/ton of pulp	Same as Existing
Arizona		All industrial process units	For units ≤ 30 ton/hr $E = 3.59\ (P)^{0.62}$ For units > 30 ton/hr $E = 17.31\ (P)^{0.16}$ Where: E = emissions (lb/hr) P = process weight (ton/hr)	Same as Existing
Arkansas		All industrial process units	For units ≤ 30 ton/hr $E = 3.59\ (P)^{0.62}$ For units > 30 ton/hr $E = 17.31\ (P)^{0.16}$ Where: E = emissions (lb/hr) P = process weight (ton/hr) Note: E cannot exceed 1000 lb/day or 100 lb/hr	Same as Existing
California	See Table 6-4	California Particulate Emission Regulations		

(Continued)

Page Two
Table 6-2 (continued)

State	Type of Pulping Process	Unit Type	Emissions Limitations: Existing Sources	Emissions Limitations: New Sources
Colorado		All industrial process units	For units $\leq$ 30 ton/hr $E = 3.59\ (P)^{0.62}$ For units > 30 ton/hr $E = 17.31\ (P)^{0.16}$ Where: E = emissions (lb/hr) P = process weight (ton/hr)	Same as existing
Connecticut		All industrial process units	For units $\leq$ 30 ton/hr $E = 3.59(P)^{0.62}$ For units > 30 ton/hr $E = 17.31\ (P)^{0.16}$ Where: E = emissions (lb/hr) P = process weight (ton/hr)	Same as existing
Delaware		All industrial process units	$E \leq 0.2$ grains/standard cubic foot	Same as existing
Florida		All industrial process units	For units < 30 ton/hr $E = 3.51\ (P)^{0.62}$ For units > 30 ton/hr $E = 17.31\ (P)^{0.16}$ Where: E = emissions (lb/hr) P = process weight (ton/hr)	Latest Reasonably Available Control Technology
Georgia		All industrial process units	$E = 4.1\ (P)^{0.67}$ Where: E = emissions (lb/hr) P = process weight (tons/hr)	For P< 30 $E = 4.1(P)^{0.67}$ For P > 30 $E=[55(P)^{0.11}]-40$

(Continued)

Page Three
Table 6-2. (continued)

State	Type of Pulping Process	Unit Type	Emissions Limitations: Existing Sources	Emissions Limitations: New Sources
Hawaii		All industrial process units	For units $\leq$ 30 ton/hr $E = 4.1\ (P)^{0.67}$ For units > 30 ton/hr $E = 40.0$ Where: E = emissions (lb/hr) P = process weight (ton/hr)	Same as existing
Idaho		All industrial process units	For units $\leq$ 30 ton/hr $E = 4.10\ (P)^{0.67}$ For units > 30 ton/hr $E = [55(P)^{0.11}]-40$ Where: E = emissions (lb/hr) P = process weight (ton/hr)	Same as existing
Illinois		All industrial process units	For units $\leq$ 30 ton/hr $E = 4.10\ (P)^{0.67}$ For units > 30 ton/hr $E = [55(P)^{0.11}]-40$ Where: E = emissions (lb/hr) P = process weight (ton/hr)	For $P < 450$ $E = 2.54(P)^{0.534}$ For $P \geq 450$ $E = 24.8(P)^{0.16}$
Indiana		All industrial process units	For units $\leq$ 30 ton/hr $E = 4.10\ (P)^{0.67}$ For units > 30 ton/hr $E = [55(P)^{0.11}]-40$ Where: E = emissions (lb/hr) P = process weight (ton/hr)	Same as existing

(Continued)

Page Four
Table 6-2. (continued)

State	Type of Pulping Process	Unit Type	Emissions Limitations: Existing Sources	Emissions Limitations: New Sources
Iowa		All industrial process units	For units $\leq$ 30 ton/hr $E = 4.10(P)^{0.67}$ For units > 30 ton/hr $E = [55(P)^{0.11}]-40$ Where: E = emissions (lb/hr) P = process weight (ton/hr) or E $\leq$ 0.1 grain/SCF of exhaust gas	Same as existing
Kansas		All industrial process units	For units < 30 ton/hr $E = 4.10(P)^{0.67}$ For units > 30 ton/hr $E = [55(P)^{0.11}]-40$ Where: E = emissions (lb/hr) P = process weight (ton/hr)	Same as existing
Kentucky		All industrial process units	For units < 30 ton/hr $E = 4.10(P)^{0.67}$ For units > 30 ton/hr $E = [55(P)^{0.11}]-40$ Where: E = emissions (lb/hr) P = process weight (ton/hr)	Same as existing
Louisiana	Kraft and neutral sulfite mills	Recovery furnaces	E $\leq$ 4 lb/equivalent pulp ton	BPAT
		Smelt dissolver vents	E $\leq$ 0.5 lb/equivalent pulp ton	
		Lime Kilns	E $\leq$ 1.0 lb/equivalent pulp ton	

(Continued)

Page Five
Table 6-2. (continued)

State	Type of Pulping Process	Unit Type	Emissions Limitations: Existing Sources	Emissions Limitations: New Sources
Maine		All industrial process units	For units $\leq$ 30 ton/hr $E = 3.59(P)^{0.62}$ For units > 30 ton/hr $E = 17.31\ (P)^{0.16}$ Where: E = emissions (lb/hr) P = process weight (ton/hr)	Same as existing
Maryland			None	None
Massachusetts		All industrial process units	$E = [55(P)^{0.11}]-40$ Where: E = emissions (lb/hr) P = process weight (ton/hr)	$E = \frac{1}{2}([55(P)^{0.11}]-40)$ E = emissions (lb/hr) P = process weight (ton/hr)
Michigan		All industrial process units	For units $\leq$ 30 ton/hr $E \leq 4.10(P)^{0.67}$ For units > 30 ton/hr $E \leq [55(P)^{0.11}]-40$ Where: E = emissions (lb/hr) P = process weight (ton/hr)	Same as existing
Minnesota		All industrial process units	For units $\leq$ 30 ton/hr $E = 3.59(P)^{0.62}$ For units > 30 ton/hr $E = 17.31(P)^{0.16}$ Where: E = emissions (lb/hr) P = process weight (ton/hr)	Same as existing

(Continued)

Page Six
Table 6-2. (continued)

State	Type of Pulping Process	Unit Type	Emissions Limitations: Existing Sources	Emissions Limitations: New Sources
Mississippi		All industrial process units	$E = 4.10(P)^{0.67}$ Where: E = emissions (lb/hr) P = process weight(ton/hr)	Same as existing
Missouri		All industrial process units	For units < 30 ton/hr $E = 4.10(P)^{0.67}$ For units > 30 ton/hr $E = [55.0(P)^{0.11}]-40$ Where: E = emissions (lb/hr) P = process weight (ton/hr)	Same as existing
Montana		All industrial process units	For units < 30 ton/hr $E = 4.10(P)^{0.67}$ For units > 30 ton/hr $E = [55.0(P)^{0.11}]-40$ Where: E =emissions (lb/hr) P = process weight (ton/hr)	Same as existing
Nebraska		All industrial process units	For units < 30 ton/hr $E = 4.10(P)^{0.67}$ For units > 30 ton/hr $E = [55.0(P)^{0.11}]-40$ Where: E = emissions (lb/hr) P = process weight (ton/hr)	Same as existing

(Continued)

Page Seven
Table 6-2. (continued)

State	Type of Pulping Process	Unit Type	Emissions Limitations: Existing Sources	Emissions Limitations: New Sources
Nevada		All industrial process units	For units $\leq$ 30,000 kg/hr $E \leq 0.193(P)^{0.67}$ For units > 30,000 kg/hr $E = [11.78(P)^{0.11}]-18.14$ Where: E = emissions (kg/hr) P = process weight (kg/hr)	Same as existing
New Hampshire	Sulfite mills		For units $\leq$ 30 ton/hr $E \leq 5.05(P)^{0.67}$ For units > 30 ton/hr $E \leq [66(P)^{0.11}]-48$ Where: E = emissions (lb/hr P = process weight (ton/hr)	For units $\leq$ 30 ton/hr $E \leq 4.10(P)^{0.67}$ For units> ton/hr $E < [55(P)^{0.11}]-40$ Where: E = emissions (lb/hr) P = process weight (ton/hr)
New Jersey		All industrial process units	For $R \leq 50$ $E = 0.5$ For $50 < R < 3000$ $E = R/100$ For $R \geq 3000$ $E = 30$ Where: E = allowable emissions (lb/hr) R = uncontrolled emissions (lb/hr)	Same as existing
New Mexico			None	None

(Continued)

Table 6-2. (continued)

State	Type of Pulping Process	Unit Type	Emissions Limitations: Existing Sources	Emissions Limitations: New Sources
New York		All industrial process units	For units $\leq$ 50 ton/hr $E \leq 0.024(P)^{0.665}$ For units > 50 ton/hr $E \leq [3q(P)^{0.082}]-50$ Where: E = emissions (lb/hr) P = process weight (lb/hr)	Same as existing
North Carolina	All pulp mills	Recovery furnace stack	$E \leq 3.0$ lb/equivalent ton of air dried pulp	Same as existing
		Dissolving tank vent	$E \leq 0.6$ lb/equivalent ton of air dried pulp	
		Lime Kiln stack	$E \leq 0.5$ lb/equivalent ton of air dried pulp	
North Dakota		All industrial process units	For units $\leq$ 30 ton/hr $E \leq 4.10(P)^{0.67}$ For units > 30 ton/hr $E \leq [55(P)^{0.11}]-40$ Where: E = emissions (lb/hr) P = process weight (ton/hr)	Same as existing
Ohio		All industrial process units	For units $\leq$ 30 ton/hr $E \leq 4.10(P)^{0.67}$ For units > 30 ton/hr $E \leq [55(P)^{0.11}]-40$ Where: E = emissions (lb/hr) P = process weight (ton/hr)	Same as existing

(Continued)

Table 6-2. (continued)

State	Type of Pulping Process	Unit Type	Emissions Limitations: Existing Sources	Emissions Limitations: New Sources
Oklahoma		All industrial process units	For units $\leq$ 30 ton/hr $E \leq 4.10(P)^{0.67}$ For units > 30 ton/hr $E = [55(P)^{0.11}]-40$ Where: E = emissions (lb/hr) P = process weight (ton/hr)	Same as existing
Oregon	Sulfite mills	Recovery furnace stack	$E \leq$ 4 lb/ton of air dried unbleached pulp produced	Same as existing
Pennsylvania		All industrial process units	For $V \leq 150,000$ $E \leq 0.\overline{04}$ For $150,000 < V < 300,000$ $E \leq 6000/(V-1)$ For $V \geq 300,000$ $E \leq 0.\overline{02}$ Where: E = emissions (grains/dry SCF) V = effluent gas volume (dry SCF)	Same as existing
Rhode Island		All industrial process units	For units $\leq$ 30 ton/hr $E \leq 4.10(P)^{0.67}$ For units > 30 ton/hr $E \leq [55(P)^{0.11}]-40$ Where: E = emissions (lb/hr) P = process weight (ton/hr)	Same as existing

(C o n t i n u e d)

Table 6-2. (continued)

State	Type of Pulping Process	Unit Type	Emissions Limitations: Existing Sources	Emissions Limitations: New Sources
South Carolina	All pulp manufacturing plants	Recovery furnace stack Dissolving tank vents Lime kiln stack	$E \leq 2.75$ lb/ton ADU pulp produced $E \leq 1.0$ lb/ton ADU pulp produced $E \leq 1.0$ lb/ton ADU pulp produced	Same as existing
South Dakota		All industrial process units	For units $\leq$ 30 ton/hr $E \leq 4.10(P)^{0.67}$ For units > 30 ton/hr $E \leq [55(P)^{0.11}]-40$ Where: E = emissions (lb/hr) P = process weight (ton/hr)	Same as existing
Tennessee		All industrial process units	For units $\leq$ 30 ton/hr $E \leq 4.10(P)^{0.67}$ For units > 30 ton/hr $E \leq [55(P)^{0.11}]-40$ Where: E = emissions (lb/hr) P = process weight (ton/hr)	For units $\leq$ 30 ton/hr $E \leq 3.59(P)^{0.62}$ For units > 30 ton/hr $E \leq 17.31(P)^{0.16}$ Where: E = emissions P = process weight
Texas		All industrial process units	For units $\leq$ 20 ton/hr $E \leq 3.12(P)^{0.985}$ For units > 20 ton/hr $E \leq 25.4(P)^{0.287}$ Where: E = emissions P = process weight (ton/hr)	Same as existing

(Continued)

Page Eleven
Table 6-2. (continued)

State	Type of Pulping Process	Unit Type	Emissions Limitations: Existing Sources	Emissions Limitations: New Sources
Utah		All industrial process units with uncontrolled emissions greater than 100 ton/yr	85% collection efficiency required	Same as existing
Vermont		All industrial process units	$E \leq 0.1$ lb/1000 lb of undiluted exhaust gas at actual conditions See Table I in state regulations	Same as existing
Virginia		All industrial process units	For units < 30 ton/hr $E \leq 4.10(P)^{0.167}$ For units > 30 ton/hr $E \leq [55(P)^{0.11}]-40$ Where: E = emissions (lb/hr) P = process weight (ton/hr)	Same as existing
Washington	Sulfite mills	Recovery system	$E \leq 4$ lb/ton ADU pulp (daily avg)	$E \leq 2$ lb/ton of ADU pulp (daily avg)
		Recovery system in areas of special need	$E \leq 2.5$ lb/ton ADU pulp (daily avg)	
West Virginia		All industrial process units	For units < 100,000 lb/hr $E \leq 0.22(P)-0.4$ For units $\geq$ 100,000 lb/hr $E \leq 21.2$ Where: E = emissions (lb/hr) P = process weight (10^3 lb/hr)	Same as existing

(Continued)

Page Twelve
Table 6-2. (continued)

State	Type of Pulping Process	Unit Type	Emissions Limitations: Existing Sources	Emissions Limitations: New Sources
Wisconsin		All industrial process units	For units < 30 ton/hr $E \leq 3.59(P)^{0.62}$ For units > 30 ton/hr $E \leq 17.31(P)^{0.16}$ Where: E = emissions (lb/hr) P = process weight (ton/hr)	Same as existing
Wyoming		All industrial process units	For units < 30 ton/hr $E \leq 4.10(P)^{0.67}$ For units > 30 ton/hr $E \leq [55(P)^{0.11}]-40$ Where: E = emissions (lb/hr) P = process weight (ton/hr)	For units < 30 ton/hr $E \leq 3.59(P)^{0.62}$ For units > 30 ton/hr $E \leq 17.31(P)^{0.16}$ Where: E = emission (lb/hr) P = process weight (ton/hr)

BPACT: Best Practical Available Control Technology.

Table 6-3. CALIFORNIA SULFUR DIOXIDE EMISSION REGULATIONS[a]

County or City	Emission Regulation
Alpine, Butte, Calaveras, Colusa, El Dorado, Fresno, Glenn, Imperial, Inyo, Kern, Kings, Los Angeles, Madera, Merced, Modoc, Mono, Nevada, Placer, Plumas, Sacramento, San Joaquin, San Luis Obispo, Stanislaus, Sutter, Toulumne, Tulare, Yolo-Solano	$E \leq 2{,}000$ ppm_v SO_2
Del Norte, Humboldt, Menodicino, Northern Sonoma, Shasta, Trinity	$E \leq 1{,}000$ ppm_v SO_2
Ventura	For process units $E \leq 500$ ppm_v SO_2 For combustion units $E \leq 300$ ppm_v SO_2
Alameda, Contra Costa, Marin, San Francisco, San Mateo, Santa Clara	$E \leq 300$ ppm_v SO_2
San Diego	$E \leq 50$ ppm_v SO_2
Lake	None

E = allowable emissions

[a]This table represents a compilation of regulations as published by the counties and air pollution control districts. The accuracy and completeness of this listing is subject to the availability of current regulatory information.

Table 6-4. CALIFORNIA PARTICULATE EMISSION REGULATIONS[a]

County or City	Emission Regulation
Alameda, Contra Costa, Marin, Sacramento, San Diego, San Francisco, San Luis Obispo, San Mateo, Santa Barbara, Santa Clara	$E \leq 4.10(P)^{0.67}$ and $E \not> 40$
Butte, Colusa, Del Norte, Glenn Humboldt, Mendocino, Modoc, Shasta, Northern Sonoma, Sutter, Trinity	For $P \leq 30$, $E \leq 4.10(P)^{0.67}$ For $P > 30$, $E \leq 55(P)^{0.11} - 40$
Calaveras, El Dorado, Fresno, Imperial, Kern, King, Madera, Merced, Nevada, Placer, Plumas, San Joaquin, Stanislaus, Toulumne, Tulare	For $P \leq 30$, $E \leq 3.59(P)^{0.62}$ For $P > 30$, $E \leq 17.31(P)^{0.16}$
Alpine, Inyo, Mono	See Regulation IV, Table II
Lake	See Section 4.12, Table IV
Los Angeles	For $P \leq 5$, $E \leq 4.14(P)^{0.67}$ For $5 < P \leq 500$, $E \leq 5.46(P)^{0.235}$ For $P > 500$, $E \leq 30$
Ventura	See Rule 53
Yolo-Solano	See Rule 2.19

E = allowable emissions (lb/hr)

P = process weight rate (ton/hr)

[a] This table represents a compilation of regulations as published by the counties and air pollution control districts. The accuracy and completeness of this listing is subject to the availability of current regulatory information.

REFERENCES

1. Compilation of Regulations from the Environment Reporter State Air Laws. Washington, D. C., Bureau of National Affairs.

2. Trip Report, Washington Department of Ecology, Lacey, Washington. Austin, Texas. Radian Corporation, June 19, 1978. Micheletti, W. C. and C. M. Thompson.

7.0 ESTIMATED EMISSIONS

This section discusses the data available for estimation of nationwide emissions. The types of emission test data available are described. Methods for sampling and chemical analysis of pollutants from the sulfite and NSSC processes are described. Current emission regulations are listed. Emission factors based on emission test data are presented and average emission factors are calculated. Nationwide emissions are estimated for some unit processes.

7.1 EMISSION TEST DATA

The only files containing significant amounts of moderately well documented emission test data found during this screening study are in the states of Washington and Oregon. Within the limitations of the screening study a diligent search was carried out to locate as much emission test data as possible.

Within the EPA the following people were contacted:

Jim Eddinger	RTP, (OAQPS, Emission Standards and Engineering Division)
Tom Lahre	RTP, (OAQPS, Monitoring and Data Analysis Division)
George Cushnie	Washington, D. C., (Effluent Guidelines Division)

George Hert	Chicago (EPA Region V)
Curt Willard	Cincinnati (IERL)
Frank Early	Denver (National Enforcement Investigation Center)

In addition to communciations with people within the EPA, representatives of the pulp industry were contacted early in the study. Paper industry representatives contacted were: Russell O. Blosser, Technical Director of the National Council of the Paper Industry for Air and Stream Improvement Inc. (NCASI) and Larry Burke of the Northwest Pulp and Paper Assocation.

The people within the EPA and the trade associations listed above suggested that emission test data were most likely to be found in state agencies responsible for control and improvement of air quality.

Appropriate state agencies in Oregon and Washington were contacted first because they are the only two states which require source sampling. They also require continuous monitoring of major sources producing sulfur dioxide emissions and frequent monitoring of major sources producing particulate emissions. Wisconsin requires annual reports of emissions. But, these reports may be based on emission factors or material balances instead of source monitoring.

7.1.1 Emission Test Data Available from the State of Oregon

The files of the Oregon Department of Environmental Quality (DEQ) contain emission reports from the sulfite and NSSC pulp mills in Oregon. The files contain reports of emissions of sulfur dioxide and particulates (where appropriate) from major emission sources in each plant. The time period covered by the files varies slightly from plant to plant. Generally,

data is available from some time during 1972 to the present. Annual summary sheets are available.

The monitoring points are the outlets of the emission control system for the recovery systems and for the digesters. Relatively sparse data are available for uncontrolled emissions. Some early reports include emission data for acid fortification towers.

Additional information in the Oregon DEQ files include Air Contaminant Discharge Permits and Permit Review Reports for each mill. Air Contaminant Discharge Permits include:

- performance standards and emission limitations,
- compliance demonstration schedule,
- monitoring and reporting requirements, and
- general conditions and background.

In addition to the specific permitting provisions these documents include brief descriptions of the mills. The Oregon DEQ files also contain a report prepared in the early seventies listing several characteristics of the sulfite and NSSC plants in Oregon. Some estimates of uncontrolled emissions are in this report. The DEQ files contain correspondence with the individual mills concerning compliance procedures. Some of this correspondence contains descriptions of emission control equipment. These descriptions are often incomplete.

7.1.2 Emission Test Data Available from the State of Washington

In the state of Washington the agency charged with regulating air quality is called the Department of Ecology (DOE). This agency has five types of files relating to air emissions. They are:

- Engineering Files,
- Special Studies Files,

- Regulatory Orders,
- Source Testing by DOE, and
- Emission Files.

A brief description of the type of information available in each follows.

7.1.2.1 Engineering Files

These files contain process diagrams for the processes as they existed in the early seventies. The information in these files tends to relate more to equipment than to process flows. Some general descriptions of emission control measures are included. In general, there is no mass or energy balance information and no emission flow data. These files are not up to date, although they do contain some scattered information designed to update them.

7.1.2.2 Special Studies Files

These files document studies made for each plant to identify major emission points. These files are in the state archives and are not readily avaialable. One example of these files was available for inspection. The special studies files may contain useful data concerning uncontrolled emissions and emissions from miscellaneous sources.

7.1.2.3 Regulatory Orders

These orders describe the emissions limits prescribed for a given plant with a timetable for compliance. The format required for reporting emissions to the state and the methods for making calculations are given. In addition, these orders describe briefly the history of the air emission control program at each plant.

7.1.2.4 Source Tests

These files contain the results of source tests made by personnel from the Department of Ecology. These tests have been made more often for

some plants than others. Approximately 3 to 6 source tests for sulfur dioxide and particulates have been made for each plant for the years 1972 to 1978. These reports contain a brief description of the pulp mill and process source, test procedures, data, calculations, and results.

7.1.2.5 Emission Files

These files contain emission data reported by individual plants on a monthly basis. The files cover the time period from about 1972 to the present. The early data is more scant than recent data. Data before 1974 has been placed in the state archives and is not readily available. Sulfur dioxide concentrations are presented as daily averages. Particulates are measured 3 or 4 times per month. No annual summaries are available.

7.1.3 Emission Data Available from the State of Wisconsin

The Wisconsin Department of Natural Resources (DNR) Bureau of Air Management has prepared a computerized emissions inventory of all point sources reported in the state. The inventory is arranged according to air regions. A loan copy of the printout for the Lake Michigan I air region was obtained. This region contains three sulfite mills and one NSSC mill. Emission factors were given for several sources in these mills including digesters and acid fortification towers. No basis for these emission factors was reported. No emission test data were listed for sources other than power boilers. Flow rates are given for some effluent streams.

7.2 Emission Factors

The emission factor data obtained as described in Section 7.1 is compiled in Tables 7-1 through 7-3 and Table 7-5. Average emission factors

Table 7-1. SUMMARY OF UNCONTROLLED AND CONTROLLED EMISSION FACTOR DATA AND RECOVERY/CONTROL METHODS FOR SULFITE PULPING, ACID PLANT EMISSIONS

Company	Location	Emission Factors (g SO_2/kg pulp)	Control Method and Comments	Data used in Average Emission Factor Calculation
Ammonia Base Mills				
Scott Paper Co.	Everett, WA	0.18[a]	Ammonia absorption followed by water & caustic scrubbing	YES
Scott Paper Co.	Everett, WA	0.002[f]	Ammonia absorption followed by water & caustic scrubbing	NO
Scott Paper Co.	Anacortes, WA	0.11[a]	Ammonia absorption, water scrubbing, control of process variables	YES
ITT Rayonier	Port Angeles, WA	0.20[a]	Packed tower and Jenssen tower with limerock	YES
Calcium Base Mills				
Georgia Pacific	Bellingham, WA	0.30[a]	Not described.[a]	NO
Georgia Pacific	Bellingham, WA	0.04[b]	Emissions from digester vent system are combined with emissions from acid plant and treated in a caustic scrubber.[g]	YES - new system installed June 1977
Georgia Pacific	Bellingham, WA	<0.01[c]		
American Can Co.	Greenbay, WI	3.8[a]	Jenssen Tower scrubber	YES
American Can Co.	Greenbay, WI	3.8[d]	Not described[d]	NO
Consolidated Papers	Appleton, WI	1.2[d]	Not described[d]	YES
Sodium Base Mill				
ITT Rayonier	Hoquiam, WA	0.08[a]	Not described[a]	NO
ITT Rayonier	Hoquiam, WA	0.13[e]	Not described[e]	YES

[a] Linero, A. Background Document: Acid Sulfite Pulping, Final Report. Environmental Science and Engineering Inc. Gainesville, Florida. EPA-450/3-77-005, PB 264 301, EPA Contract No. 68-02-1402. January 1977.

[b] Washington, DOE, Monthly Emission Reports, January 1978 through May 1978.

[c] Washington, DOE, Source test, September 22, 1977.

[d] Wisconsin Department of Natural Resources, Bureau of Air Management, 1977 Air Emission Inventory, Lake Michigan 1, May 26, 1978

[e] Washington, DOE, Monthly Emission Reports, April 1977 through May 1978.

[f] Washington, DOE, Source Test Report. Test performed January 17, 19, 1978. Report dated February 6, 1978.

[g] Washington, DOE, Regulatory Order Docket, No. DE 78-108, Appendix B, Fact Sheet, February 27, 1978.

Table 7-2. SUMMARY OF UNCONTROLLED AND CONTROLLED EMISSION FACTOR DATA AND RECOVERY/CONTROL METHODS FOR SULFITE PULPING, DIGESTER DISCHARGE SYSTEM EMISSIONS

COMPANY	MILL LOCATION	EMISSION FACTORS ($g\ SO_2/kg$ pulp)	CONTROL METHOD AND COMMENTS	DATA USED IN AVERAGE EMISSION FACTOR CALCULATIONS
Magnesium Base Sulfite Mills				
Great Northern	Millinocket, ME	3.2[a]	Cool water added at end of cycle[a]	YES
Publishers Paper	Newberg, OR	0.6[a]	Two stage turbulent contact absorber system installed in September 1973; SO_2 emissions reduced by 98%.	NO
Publishers Paper	Newberg, OR	22[b]	None	YES
Publishers Paper	Newberg, OR	0.9[c]	Two stage turbulent contact absorber	YES
Publishers Paper	Oregon City, OR	0.1[a]	Horizontal packed-bed scrubber and digester pump-out system. System installed in November 1974; SO_2 emissions reduced by 99%.[a]	NO
Publishers Paper	Oregon City, OR	26.[g]	None	YES
Publishers Paper	Oregon City, OR	1.2[e]	Low pressure, relief stack, sprays[e]	NO
Publishers Paper	Oregon City, OR	0.5[c]	Pump-out system and caustic scrubber[c]	YES
Crown Zellerbach	Camas, WA	1.0[a]	Magnefite process began in 1972; lower free SO_2 in cook liquor.[a]	YES
Crown Zellerbach	Camas, WA	1.0[f]	Quench pumped into blow line during blow[g]	NO
Weyerhaeuser	Longview, WA	0.01[e]	Digester is dumped; the dump tank is vented to recovery furnace absorber	NO
Ammonia Base Sulfite Mills				
Boise Cascade	Salem, OR	25[i]	None. Installed digester pump-out system January 1974.[i] Since installation of pump-out system, digester emissions have been passed through recovery system absorber and not reported separately.	YES

(Continued)

Page 2
Table 7-2. (Continued)

COMPANY	MILL LOCATION	EMISSION FACTORS ($g\ SO_2/kg$ pulp)	CONTROL METHOD AND COMMENTS	DATA USED IN AVERAGE EMISSION FACTOR CALCULATIONS
Ammonia Base Sulfite Mills				
Boise Cascade	Salem, OR	40[e]	Low pressure, relief stack, sprays[e]	YES
Finch Pruyn	Glens Falls, NY	None[e]	Continuous digester. This is a bisulfite mill. The continuous digester eliminates the discharge to the blowpit.[e]	NO
Scott Paper Co.	Anacortes, WA	12[a]	None, other than pressure relief system. This mill closed permanently in March 1978.	YES
Scott Paper Co.	Everett, WA	0.2[a]	Pressure relief system vented to acid plant. Condensation system and scrubber. About 54% of plant serviced by recovery system, 46% by acid plant.[a]	YES
Scott Paper Co.	Everett, WA	0.2[h]	The stack sampled serves 12 digesters. Six are blown at 172 kPa (25 psi) and six are dumped at atmospheric pressure. The effluent gases are cooled and passed through spray towers with water as the absorbing liquid.[h]	NO
ITT Rayonier	Port Angeles, WA	0.2[a]	Packed tower followed by Jenssen lime rock scrubber.	YES
Procter & Gamble	Green Bay, WI	4.7[j]	Not described; Basis for emission factors not given.	NO
Calcium Base Acid Sulfite Mills				
Georgia Pacific	Bellingham, WA	0.01[a,k]	Caustic scrubbing facility.	NO
Georgia Pacific	Bellingham, WA	0.04[ℓ]	Emission rate includes contribution from acid plant.	YES
Georgia Pacific	Bellingham, WA	<0.01[m]	Caustic scrubber offgas.	NO
Georgia Pacific	Bellingham, WA	10/[e]	Stack scrubber; before caustic was used.	NO
American Can Co.	Greenbay, WI	34/[a]	Unknown.[a]	YES
American Can Co.	Greenbay, WI	16/[j]	Partial relief of pressure before digester discharge. Basis for emission factor not given.	YES

(Continued)

Page 3
Table 7-2. (Continued)

COMPANY	MILL LOCATION	EMISSION FACTORS (g SO_2/kg pulp)	CONTROL METHOD AND COMMENTS	DATA USED IN AVERAGE EMISSION FACTOR CALCULATIONS
Sodium Base Acid Sulfite Mill				
ITT Rayonier	Hoquiam, WA	1.0[a,k]	Chemical scrubber.	NO
ITT Rayonier	Hoquiam, WA	0.8[n]	Unknown.	YES

[a] Linero, A. Background Document: Acid Sulfite Pulping, Final Report. Environmental Science and Engineering Inc. Gainesville, Florida. EPA-450/3-77-005, PB 264 301, EPA Contract No. 68-02-1402. January 1977.

[b] Oregon DEQ, Annual Summaries of Monthly Monitoring Reports, February through August 1972.

[c] Oregon DEQ, Annual Summaries of Monthly Monitoring Reports, January through December 1977.

[d] Oregon DEQ, Annual Summaries of Monthly Monitoring Reports, January through December 1977.

[e] Oregon Department of Environmental Quality, Air Quality Control Division, Sulfite Pulping-Emissions and Control, a Background Report for Sulfite Pulp Mill Regulations, undated.

[f] Oregon DEQ, Monthly Monitoring Report, April 1978.

[g] Aspitarte, T. R. Crown Zellerbach Environmental Services, Camas, WA. Personal communication with Wayne Micheletti, Radian Corporation, June 7, 1978.

[h] Washington, DOE, Source Test Report. Tests performed January 17 and 19, 1978. Report dated February 6, 1978.

[i] Oregon DEQ Annual Summary of Monthly Monitoring Report, July 1972 through December 1973.

[j] Wisconsin Department of Natural Resources, Bureau of Air Management, 1977 Air Emission Inventory, Lake Michigan I, May 26, 1978.

[k] Literature source notes that data are unreliable.

[l] Washington, DOE. Monthly Emission Reports, January 1978 through May 1978.

[m] Washington, DOE Source Test 77-34, September 22, 1977.

(Continued)

Table 7-2. (Continued)

Footnotes continued...

[n]Washington DOE, Monthly Emission Reports, April 1977 through May 1978. Based on 15.6 kg (34.5 lb) sulfur dioxide lost from blow pit vent stacks.

[o]Schmall, Rodney, Publishers Paper Co., Oregon City, OR, Personal communication with Carol May Thompson, Radian Corporation, May 31, 1978.

[p]Hoover, Richard, Scott Paper Company, Anacortes, WA, Personal communication with Wayne C. Micheletti, Radian Corporation, June 1, 1978.

[q]Oregon DEQ, Annual Summaries of Monthly Monitoring Reports, January through October 1974.

Table 7-3. SUMMARY OF UNCONTROLLED AND CONTROLLED EMISSION FACTOR DATA AND RECOVERY/CONTROL METHODS FOR SULFITE PULPING, RECOVERY SYSTEM EMISSIONS

COMPANY	MILL LOCATION	Emission Factors for Sulfur Dioxide (g SO_2/kg pulp)	Emission Factors for Parcitulates (g Particulates/kg pulp)	RECOVERY/CONTROL SYSTEM	DATA USED IN AVERAGE EMISSION FACTOR CALCULATIONS
Magnesium Base Sulfite Mills					
Great Northern	Millinocket, ME	4.6[a]	1.4[a]	Multiclones and 4 Venturi Scrubbers	YES
Publishers Paper	Newberg, OR	6.4[a]	0.9[a]	Multiclones and 4 Venturi Scrubbers	NO
Publishers Paper	Newberg, OR	8.0[b]	1.0[b]	Multiclones and 4 Venturi Scrubbers	YES
Publishers Paper	Newberg, OR	5.7[c]	1.4[c]	Multiclones and 4 Venturi Scrubbers	YES
Publishers Paper	Oregon City, OR	5[a]	1.0[a]	Multiclones and 4 Venturi Scrubbers	NO
Publishers Paper	Oregon City, OR	13.9[b]	1.4[b]	Multiclones and 3 Venturi Scrubbers	YES
Publishers Paper	Oregon City, OR	4.8[c]	1.2[c]	Multiclones and 4 Venturi Scrubbers	YES
Crown Zellerbach	Camas, WA	2.9[a]	1.4[a]	Multiclones and 4 Venturi Scrubbers	YES
Crown Zellerbach	Camas, WA	3.9[g]	1.7[g]	Unknown.	NO
Weyerhaeuser	Cosmopolis, WA	4.9[a]	1.5[a]	Absorption System and Recovery not described.[a]	NO
Weyerhaeuser	Cosmopolis, WA	10 [d]	2.4-5.6[d]	Packed towers	NO
Weyerhaeuser	Cosmopolis, WA	11.5[f]	4.6[f]	Recovery furnace No. 1 (Sampling methods being tested)	NO
Weyerha	Cosmopolis, WA	0.8[f]	3.3[f]	Recovery furnace No. 2 (Sampling methods being tested)	NO

(Continued)

Page 2
Table 7-3. (Continued)

SUMMARY OF UNCONTROLLED AND CONTROLLED EMISSION FACTOR DATA AND RECOVERY/CONTROL METHODS FOR SULFITE PULPING, RECOVERY SYSTEM EMISSIONS

COMPANY	MILL LOCATION	Emission Factors for Sulfur Dioxide (g SO_2/kg)	Emission Factors for Particulates (g Particulates/kg)	RECOVERY/CONTROL SYSTEM	DATA USED IN AVERAGE EMISSION FACTOR CALCULATIONS
Weyerhaeuser	Cosmopolis, WA	4.4[e]	1.8[e]	Recovery furnace No. 1, Packed towers[m]	YES
Weyerhaeuser	Cosmopolis, WA	3.5[e]	2.0[e]	Recovery furnace No. 2, Packed towers[m]	YES
Weyerhaeuser	Cosmopolis, WA	3.8[e]	1.6[e]	Recovery furnace No. 3, 3 Venturi scrubbers plus a packed tower.[m]	YES
Weyerhaeuser	Longview, WA	4.1[a]	2.4[a]	Absorption System and Recovery not described.[a]	YES
Ammonia Base Sulfite Mills					
Boise Cascade	Salem, OR	4.4[a]	0.2[a]	SO_2 scrubber (95%) followed by Brinks eliminator.[a]	NO
Boise Cascade	Salem, OR	8.4[i]	2.3[i]	Scrubbing with ammonia in perforated plate tower[n] before installation of Brinks mist eliminator in June 1975.	YES
Boise Cascade	Salem, OR	2.1[j]	0.3[j]	Scrubbing with ammonia after installation of Brinks mist eliminator.	YES
Scott Paper Co.	Everett, WA	2.3[a]	0.4[a]	Ammonia scrubbing, followed by mist eliminator.[a]	YES
Scott Paper Co.	Everett, WA	2.2[h]	0.2[h]		NO
ITT Rayonier	Port Angeles, WA	4.2[a]	0.4[a]	Ammonia scrubbing followed by Brinks eliminator.[a]	YES
Sodium Base Sulfite Mill					
ITT Rayonier	Hoquiam, WA	0.1[a]	1.9[a]	Unknown[a]	NO
ITT Rayonier	Hoquiam, WA	27[k]	5[k]	Before controls added	YES
ITT Rayonier	Hoquiam, WA	0.1[ℓ]	1.4[ℓ]	Controls not described in reference	YES

[a]Linero, A. Background Document: Acid Sulfite Pulping, Final Report. Environmental Science and Engineering Inc. Gainesville, Florida. EPA-450/3-77-005, PB 264 301, EPA Contract No. 68-02-1402. January 1977.

[b]Oregon DEQ, Annual Summary of Monthly Monitoring Report, April 1972 through December 1972.

[c]Oregon DEQ, Annual Summary of Monthly Monitoring Reports, January 1977 through December 1977.

[d]Oregon Department of Environmental Quality, Air Quality Division, Sulfite Pulping - Emissions and Control, a Background Report for Sulfite Pulp Mill Regulations, undated.

[e]Washington, DOE, Monthly Emission Reports, December 1977 through April 1978.

[f]Washington DOE, Source Test, April 19, 1972.

[g]Washington DOE, Mill Emission Report, April 1978.

[h]Washington, DOE Source Test Report. No. 78-3. Test date: January 17 and 19, 1978; Report date: February 6, 1978.

[i]Oregon DEQ, Annual Summary of Monthly Monitoring Reports, January 1974 through December 1974.

[j]Oregon DEQ, Annual Summary of Monthly Monitoring Reports, January 1977 through December 1977.

[k]Washington, DOE, Regulatory Order No. 38-4, December 18, 1972, Amended July 17, 1973.

[l]Washington DOE, Sulfite Mill Emission Report, April 1978.

[m]Michelettl, Wayne and Carol May Thompson, Trip Report of Visit to Weyerhaueser Mill in Cosmopolis, WA, June 20, 1978.

[n]Michelettl, Wayne and Carol May Thompson Trip Report of Visit to Boise Cascade Mill in Salem, OR, June 22, 1978.

Table 7-4. AVERAGE UNCONTROLLED AND CONTROLLED EMISSION FACTORS FOR SULFITE PULPING.

SOURCE	CONTROL	NO. OF MILLS (No. of data points)	NO. OF MILLS (w/at least 5 mos. monitoring)	Average Emission Factors for Sulfur Dioxide ($g SO_2$/kg pulp) Range	Average	Average Emission Factors for Particulates (g particulates/kg pulp) Range	Average
Acid Plant (ammonia base)	Ammonia scrubbing followed by caustic scrubbing, water scrubbing or scrubbing in presence of limerock	3	3	0.1-0.2	0.2	---	----
Acid Plant (calcium base)	Caustic scrubber (includes emissions from digester vent)	1	1	---	0.04	---	---
	Controls not described in reference[a]	2	--	1.2-3.8	2.5	---	---
Acid Plant (sodium base)	Controlled but controls not described in reference	1	1	--	0.1	---	---
Digester Discharge	None	5	3	22-40	29	---	---
	Partial relief of pressure	2	1	12-16	14	---	---
	Pressure relief, quench liquid added	2	--	1.0-3.2	2.1	---	---
	Scrubbers	6	4	0.04-0.9	0.4	---	---
Recovery Furnace (magnesium base)	Scrubbing with magnesium bisulfite for economic reasons[b]	2	2	8.0-13.9	11.0	1.0-1.4	1.2
	Scrubbing with magnesium bisulfite to meet environmental regulations	8[c]	7	2.9-5.9	4.2	1.2-2.4	1.6
Recovery Furnace (ammonia base)	Ammonia scrubbing without mist eliminator	1	1	---	8.4	---	2.3
	Ammonia scrubbing with mist eliminator	3	3	2.1-4.2	2.9	0.2-0.4	0.3
Recovery Furnace (sodium base)	Not controlled or only partially controlled	1	--	---	27.	---	5.
	Controlled, but description of controls not obtained	1	--	---	0.1	---	1.4

[a]This process may be controlled only by control of process variables.

[b]As explained in the text, this degree of control represents "uncontrolled emissions" for magnesium base recovery systems.

[c]Six mills are represented but one mill has 3 recovery systems so 8 recovery systems are represented

Table 7-5. SUMMARY OF UNCONTROLLED AND CONTROLLED EMISSION FACTOR DATA AND CONTROL METHODS FOR NSSC PULPING.

SOURCE	COMPANY	LOCATION	EMISSION FACTORS ($g\ SO_2/kg$ pulp)	EMISSION FACTORS ($\frac{g\ particulates}{kg\ pulp}$)	CONTROL
Acid Plant or Cooking Liquor Preparation	Menasha Corp.	North Bend, OR	0.003[a]	None	None
	Menasha Corp.	North Bend, OR	<0.03[b]	None	None
	Longview Fibre Co.	Longview, WA	0.40[c] @120 Mg/day (60% capacity)	None	None
Digester System	Menasha Corp.	North Bend, OR	Zero[d]	None	None
	Longview Fibre Co.	Longview, WA	0.36[e]	None	None
Recovery System	Menasha Corp.	North Bend, OR	No data	1.7[f]	Furnace operation and direct contact evaporator
	Green Bay Packaging Inc.	Green Bay, WA	0.01[g]	79/[g]	None
	Green Bay Packaging Inc.	Green Bay, WA	0.01[g]	1.1[g]	Venturi Scrubber

[a] Oregon DEQ Annual Summaries of Monthly Monitoring Reports. April through December 1973 and January through July 1976.

[b] Oregon DEQ, Air Contaminant Discharge Permit Review Report (File 06-0015, December 16, 1974.)

[c] Washington DOE Report. Air Emissions; Exhibit II - Air. December 22, 1972. As reported by W. C. Micheletti and C. M. Thompson in Trip Report to Washington DOE, June 19, 1978.

[d] Oregon DEQ Air Contaminant Discharge Permit Review Report (File 06-0015, December 16, 1974.)

[e] Letter from J. W. Klein (Longview Fibre) to Richard Burkhalter (Washington DOE). Dated: July 1, 1971. As reported by W. C. Micheletti and C. M. Thompson in Trip Report to Washington DOE, June 19, 1978.

[f] Oregon DEQ Annual Summaries of Monthly Monitoring Reports, February 1977 through November 1977.

[g] Wisconsin DNR, Bureau of Air Management, 1977 Air Emission Inventory, May 26, 1978. Emission factors in this reference are given in terms of amount of liquor burned. This emission factor was calculated by multiplying the given emission factor by the given amount of liquor burned per year to obtain the total amount of emissions per year. The total annual emissions were then divided by the annual capacity of the plant obtained by multiplying the daily capacity given in Table 3-2 by the number of days the mill operated in 1977 (306 days).

for sulfite processes are listed in Table 7-4. The emission factors are given in grams of pollutant per air dry unbleached kilogram of pulp. These emission factors can be converted to pounds pollutant per air dried unbleached ton of pulp by multiplying by two. Emission data which were not presented in terms of amount of pulp produced were converted using appropriate calculations. In some cases, mill capacities as listed in Table 3-2 were required for these calculations.

Potential major sources of emissions for sulfite processes are acid absorption towers, digester discharge systems and recovery systems. The only pollutant of significance from acid absorption towers and digester discharge systems is sulfur dioxide. Recovery systems emit sulfur dioxide and particulates.

Some concern has been expressed[1] regarding NO_x emissions from ammonia base spent sulfite liquor recovery systems. A recent EPA document[2] cites the results of a private study. This study found flue gas nitrogen oxide concentrations of 200 to 500 ppm by volume as NO_2. Peak values up to 1000 ppm_v were observed. Emission factors for nitrogen oxides were reported to average 8.3 g NO_2 per kg pulp produced. Emission factors were reported to range from 4.7 to 11.8 g NO_2 per kg pulp. All nitrogen oxides were reported as nitrogen dioxide. The concentrations of nitrogen oxides reported are substantially higher than the 25 to 75 ppm NO_x reported for magnesium base sulfite recovery furnaces and kraft recovery furnaces.

Some of the emissions listed in Tables 7-1 through 7-3 and 7-5 represent the average of continuous monitoring efforts for an extended period of time (typically five months to one year). Other emissions are the results of monitoring for shorter lengths of time or of single sets of

tests. In some cases the number or type of measurements made to obtain the factors listed are not given in the references cited.

Potential emission sources for the NSSC process are: acid absorption towers, digesters, and recovery systems. Emissions from these sources are discussed within the limits of the data obtained.

7.2.1 Emission Factors for Acid Plants at Sulfite Mills

Data concerning acid plant emissions were obtained for seven mills. The mills are listed in Table 7-1. Three of the mills are ammonia base mills, three are calcium base mills and one is a sodium base mill. All magnesium base mills from which data were obtained vented acid plant emissions through the recovery system or the digester gas control system so no separate acid plant emissions were identifiable.

Factors influencing emissions from acid absorption towers include the type and concentration of absorbing solution, the gas to liquid ratio and the control systems added to the absorption tower. Another factor influencing the amount of sulfur dioxide emitted is the amount of make-up sulfur added to the system. Magnesium, ammonia and sodium base mills usually recover sulfur values from the spent cooking liquor. Calcium base mills do not. Therefore, a much larger amount of make-up sulfur is required for calcium base mills than for other sulfite mills. This higher make-up requirement makes acid plant emissions higher on the basis of a per unit weight of pulp produced for calcium base mills than for other sulfite mills.

Control measures applied to sulfur dioxide absorption towers include control of process variables, or addition of scrubbers.

7.2.2 Emission Factors for Digester Discharge at Sulfite Mills

Emissions from discharging the contents of the digesters appear to depend more upon the method used to empty the digester than on any other factor. Theoretically, the pH of the cooking liquor should have a significant influence on emissions since much more free sulfur dioxide is available in an acid sulfite liquor than in a bisulfite liquor. However, the data in Table 7-2 do not show a large effect of pH. The Publisher's Paper Co. mills at Newberg and Oregon City are bisulfite mills and the Boise Cascade mill in Salem is an acid sulfite mill. Uncontrolled emission factors averaged over periods of at least seven months for the three plants are: 22, 26, and 25 g SO_2 per kg pulp, respectively.

Control measures used to reduce emissions from digester discharge include pressure relief in the digester before it is emptied, addition of quench liquor and use of scrubbers. Neutralization of the pulp-liquor slurry leaving the digesters is practiced by some mills.

7.2.3 Emission Factors for Recovery Systems at Sulfite Mills

The base used in the cooking liquor will determine the design of the recovery system. Mills using cooking liquor with calcium as the base do not practice chemical recovery for return to the process. Calcium (and ammonia) spent sulfite liquor is used as road binding materials or is processed for use in drilling muds, fertilizers, or animal feed. Products such as vanillin and ethanol are made from the spent sulfite liquor by some calcium base mills. Two mills (one calcium base and one ammonia base) use the spent liquor as a nutrient to grow special varieties of yeast.

Some calcium base spent sulfite liquor is incinerated to avoid water pollution problems. This means of disposal is used only when the supply

of spent sulfite liquor exceeds the demand for the purposes listed above. Incineration of calcium base spent sulfite liquor creates a particulate emission problem.[3] However, no data were located as to the amount of emissions this incineration produces.

Consolidated Papers' Mill in Appleton, Wisconsin burned calcium base liquor for 29 days in 1977. However, the burning was carried out in a boiler which used natural gas as fuel for 295 days and Number 2 fuel oil as fuel 50 days.[4] Presumably, the spent sulfite liquor was fired with one or another of the other fuels. No data were presented which could be related to emissions resulting from the burning of the calcium base spent sulfite liquor.

Mills which use magnesium as the base in the cooking liquor have always been designed with recovery systems. Recovery of magnesium is required for the mills to be economically competitive. Recovery of sulfur also has been standard practice in these mills.

For magnesium base mills the distinction between uncontrolled and controlled emissions is only a matter of degree. "Uncontrolled emissions" can be defined to be the level of emissions using the degree of control exercised before environmental regulations were instituted. "Controlled emissions" would be the level of emissions resulting after additional controls were added to meet environmental regulations.

Data for three magnesium base mills (Publisher's Paper, Newberg, Oregon; Publisher's Paper, Oregon City, Oregon, and Weyerhaeuser, Cosmopolis, Washington) for the time period 1971-1972 (see Table 7-3) show average sulfur dioxide emissions from recovery systems of 8.0, 13.9 and 10.0 g sulfur dioxide per kg unbleached pulp produced. The Washington

and Oregon state regulations permit 10 g sulfur dioxide per kg pulp for all mill emissions. These same three mills had average emissions of 5.7, 4.8 and 3.9 g sulfur dioxide per kg pulp in 1977-78. The average emissions for the three mills before 1973 was 10.6 g SO_2 per kg pulp. The average for the same three mills in 1977-78 was 4.8 g SO_2 per kg pulp. These reductions in sulfur dioxide emissions were achieved by more careful operation of the recovery train in some cases. In other cases, additional absorbing units had to be added to the recovery train.

Particulate emissions from the recovery systems for the three mills discussed above were 1.0, 1.4 and 2.4-5.6 g particulates per kg pulp before 1973. In 1977 and early 1978 the particulate emissions of the same three mills was 1.4, 1.2 and 1.8 g particulates per kg pulp. Particulate emissions increased slightly for one mill and remained about the same for another. Particulate emissions for the third mill decreased significantly. The control methods used for particulates at these mills are the same as control methods used for sulfur dixoide. Mist eliminators have been added at times to reduce particulate emissions. Plugging of the mist eliminators has been a problem and none of these three mills had a mist eliminator in operation in mid-1978.

7.2.4 Average Emission Factors for Sulfite Mills

The average emission factors for sources in sulfite mills listed in Table 7-4 were calculated from the emission factors listed in Tables 7-1 through 7-3. Average factors are listed for sources within sulfite mills and for varying degrees of control (including no control) on each of the sources. When data were available from more than one similar source the emissions were averaged. The paragraphs below give the procedure which

was used to select which emission factors were included in the averages presented in Table 7-4.

To obtain an average emission factor all sources having similar characteristics were grouped together. If more than one set of data was available for an emission factor from a source in a given mill, the "best" factor was chosen. Generally, the "best" factor was that one which represented the most recent monitoring over an extended period of time. Factors based on extended monitoring were chosen over those based on single tests. If the same source in the same mill fit different categories of control at different times, the emission factors usually were included in each category.

The average emission factors were calculated by averaging the "best" emission factors for each source in each category of control. Columns in Tables 7-1 through 7-3 indicate which data were chosen for averaging. Table 7-4 indicates the number of data points included in the average. Table 7-4 also lists the number of data points included in the average which represent averages of long-term monitoring data. Ranges and average emission factors for sulfur dioxide and particulate emissions are given.

7.2.5 Emission Factors for NSSC Mills

Potential emission sources at NSSC mills include the acid absorption tower, the digester and the recovery furnace or incinerator. Data listed in Table 7-5 indicate that emissions from the acid absorption tower and the digester are very low. The recovery furnace emissions factors listed in Table 7-5 are from only one type of incinerator. Several types of recovery furnaces and incinerators are used by mills using the NSSC process.

Table 7-6. ESTIMATED NATIONWIDE EMISSIONS

SOURCE	CONTROL	AVERAGE EMISSION FACTORS (g SO_2/kg PULP)	AVERAGE EMISSION FACTORS (g PARTICULATES/kg PULP)	ESTIMATED CAPACITY (Mg PULP/DAY)	ESTIMATED NATIONWIDE EMISSIONS[a] (kg SO_2/DAY)	ESTIMATED NATIONWIDE EMISSIONS[a] (kg PARTICULATES/DAY)
Acid Plant (ammonia base)	Scrubber	0.2	---	2804	561.	---
Acid Plant (calcium base)	Scrubber	0.04	---	454	18.	---
	Control of process variables	2.5	---	697	1742.	---
Acid Plant (sodium base)	Controls not described	0.1	---	430	43	---
Digester Discharge	None	29.	---	---	---	---
	Partial pressure relief	14.	---	505	7070	---
	Partial pressure relief-quench liquid added	2.1	---	2194	4607	---
	Scrubbers	0.4	---	5031	2012	---
Recovery furnace (magnesium base)	Scrubbing for economic recovery	6.0	1.2	908	5448	1090.
	Scrubbing to meet environmental regulations	4.2	1.6	2709	11378	4334
Recovery Furnace (ammonia base)	Scrubbing w/o mist eliminator	8.4	2.3	1366	11474	3142
	Scrubbing w/mist eliminator	2.9	0.3	1438	4170	431
Recovery furnace (sodium base)	Controlled	0.1	1.4	430	43	602
					48,566	9,599

[a]Estimated nationwide emissions are based on capacity figures because capacities of individual plants are available whereas production rates of individual plants are not available. The production rate in the sulfite wood pulping industry averaged 90 percent for sulfite paper grades of pulp and 95 percent for dissolving and special alpha grades of pulp. A weighted average utilization factor of 91 percent is appropriate.

7.3 ESTIMATION OF NATIONWIDE EMISSIONS

Table 7-6 presents estimates of nationwide emissions. These estimated emissions are obtained by multiplying the estimated capacity associated with each source and each control method by the appropriate average emission factors.

The assumptions made in estimating capacity associated with each source are presented below. All capacities are taken from Table 3-2. For these calculations it has been assumed that the ITT Rayonier Mill in Washington is the only operating sodium base acid sulfite mill in the United States.

7.3.1 Estimation of Nationwide Emissions from Acid Plants at Sulfite Mills

Emission factors from acid plants depend on the base used to prepare cooking liquor and whether acid tower emissions are scrubbed. All magnesium base mills for which information was obtained passed acid plant emissions through the recovery systems. Consequently, no emission factors are listed for acid plants associated with mills using magnesium as the base.

The total capacity of sulfite mills using ammonia as the base is 2804 Mg of air dried unbleached pulp per day. Three ammonia base mills for which data were available used some type of scrubber after the acid absorption tower. The assumption was made that all acid plants associated with ammonia base mills use some form of scrubbing after the acid absorption tower.

The total capacities of sulfite mills using calcium as a base is 1151 Mg per day. It is known that the mill in Bellingham, Washington passes the off-gas from the acid absorption towers through a scrubber. The capacity of this mill is 454 Mg per day. All other calcium base mills are in Wisconsin. The assumption was made that the emissions from

the acid plants of all the calcium base mills in Wisconsin could be described by the average emission factor determined from two Wisconsin mills.

There is only one sodium base mill in the United States and the emission factor from the acid plant associated with it is known.

7.3.2 Estimation of Nationwide Emissions from Digester Discharge Systems at Sulfite Mills

Emission factors from digester discharge systems depend primarily upon the methods used to control these emissions. There are 26 operating sulfite mills in the United States. The total capacity of all sulfite mills is 8002 Mg/day. One sulfite mill is known to use a continuous digester and the digester discharge emissions are reported to be zero.[5] The capacity of this mill is 272 Mg per day. The remaining 25 mills are presumed to use batch digesters.

Three mills (in Cosmopolis and Longview, Washington and Salem, Oregon) are known to pass digester discharge emissions through the recovery system. These three mills were assumed to have emissions similar to those which have separate scrubbers. The total capacity of these mills is 998 Mg per day. Mills in Everett, Port Angeles, Camas, Bellingham, and Hoquiam, Washington and Oregon City and Newberg, Oregon are known to have scrubbers on digester discharge systems. The total capacity of these plants is 2477 Mg per day. The assumption was made that the two Alaskan mills also have scrubbers or their equivalent to control digester discharge emissions. This assumption seems reasonable since the Alaskan air emission regulations are very similar to those in Washington and Oregon. These two mills have a combined capacity of 1102 Mg per day.

The mill in Maine relieves the pressure and quenches the pulp before the digester is emptied. The capacity of this mill is 544 Mg per day. The calcium base mill in Green Bay, Wisconsin partially relieves the pressure and blows the digesters. The capacity of this mill is 136 Mg per day.

No information was obtained concerning the methods for controlling blow pits emissions from the remaining 2017 Mg/day capacity. Since all mills, except the one in Lebanon, Oregon, were in states which do not have strict sulfur dioxide emission regulations for sulfite pulp mills, the remaining capacity was split between quenching and partial pressure relief. Approximately four times as much capacity was assumed to use quench liquid as to use pressure relief alone.

7.3.3 Estimation of Nationwide Emissions from Recovery Systems at Sulfite Mills

Emission factors from recovery systems depend on the base used in the cooking liquor and the degree of control used on the recovery system. As discussed in a previous section of this report, all magnesium base sulfite mills have recovery systems. Seven of the 10 magnesium base sulfite mills are in Washington, Oregon and Alaska. These mills have a combined capacity of 2709 Mg per day. Emission factors appropriate to operation under strict environmental controls were applied to these mills. The remaining mills are in Maine and Wisconsin. The total capacity of these mills is 908 Mg per day. These mills were assumed to be operating with emissions appropriate to economic recovery of mangesium oxide.

The total capacity of mills using ammonia as a base is 2804 Mg per day. Three of these mills are reported to be operating with mist

eliminators. Their combined capacity is 1438 Mg per day. It was assumed that the remaining mills are operating without mist eliminators.

The emission factors for the sodium base mill are known. Calcium base mills do not have recovery systems.

7.3.4 Estimation of Nationwide NO_x Emissions from Ammonia Base Sulfite Mills

The total capacity of sulfite mills using ammonia as the base is 2804 Mg per day. The average emission factor reported for NO_x emissions from ammonia base mills is 4.7 kg NO_x per Mg pulp (as NO_2). These figures yield an estimated nationwide emission rate of 13 Mg NO_x per day.

7.3.5 Estimated Nationwide Emissions from NSSC Pulp Mills

Potential emission sources in NSSC mills include the acid absorption tower, the digester and the recovery system. Maximum nationwide emissions can be estimated for the acid plants and the digesters. But, not enough information is available to estimate nationwide emissions from recovery systems associated with NSSC mills.

In Section 3.2.2 the maximum NSSC pulping capacity in the U. S. was estimated to be 9180 Mg per day. The highest emission factor listed in Table 7-5 for the acid plant associated with a NSSC mill is 0.40 g SO_2 per kg pulp. If this emission factor is used, the maximum nationwide emissions from NSSC acid plants are 3.7 Mg sulfur dioxide per day. A similar calculation using the highest emission factor for the digester system yields a maximum emission of 3.3 Mg sulfur dioxide per day.

Emission factor data were obtained from the recovery systems of two stand alone NSSC mills. Both these mills use Dorr-Oliver incinerators. The information on recovery systems listed in Table 3-4 indicates that these systems are not typical of the industry as a whole. Extrapolation

of the emission factors for these recovery systems to the industry as a whole could lead to misleading results. Therefore, no estimates of nationwide emissions from NSSC recovery systems were made.

7.4 MODEL IV CALCULATIONS

Model IV is a means of quantitatively estimating the anticipated impact of standards of performance in preventing atmospheric emissions. The potential emission reduction resulting from the application of standards of performance is expressed as :

$$(T_S - T_N) \qquad (7\text{-}1)$$

where:

T_S = Emission under baseline year control regulations

T_N = Emissions under new or revised standards of performance.

In 1975, The Research Corporation of New England prepared Model IV estimates for a number of industries, including sulfite and NSSC wood pulping.[6] The information obtained for the NSSC process during the current screening study is too sparse to allow for a revised Model IV calculation for this industry. However, the updated information obtained for the sulfite process allows for an almost completely revised Model IV calculation. The steps in calculating the revised Model IV estimate are outlined in Appendix B.

According to these calculations, implementation of new source performance standards would reduce SO_2 emissions by 4.23 Gg/year (4,670 tons/year) in 1983. Particulate emissions would be decreased by 237 Mg/yr (263 tons/yr) in 1983. The Research Corporation of New England had predicted SO_2 and particulate emission reductions of 49 Gg/yr (54,000 ton/yr) and 0.0 Gg/yr (0.0 ton/yr), respectively.[7]

REFERENCES

1. Early, Frank, EPA National Enforcement Investigation Center Denver, Co. Personal communication with Wayne C. Micheletti, Radian Corporation, May 17, 1978.

2. Environmental Pollution Control, Pulp and Paper Industry, Part 1, Air. Environmental Protection Agency, Office of Technolgy Transfer. EPA 625/7-76-001. October 1976. p. 14-27.

3. Didier, Paul, Wisconsin Department of Natural Resources, Bureau of Water Management. Personal communication with Carol May Thompson, Radian Corporation, July 18, 1978.

4. Wisconsin Department of Natural Resources, Bureau of Air Management, 1977 Air Emission Inventory, Lake Michigan I, May 26, 1978.

5. Oregon Department of Environmental Quality, Air Quality Control Division, Sulfite Pulping - Emissions and Control; A Background Report for Sulfite Pulp Mill Regulations, undated.

6. Hooper, T. G. and W. A. Marrone. Impact of New Source Performance Standards on 1985 National Emissions from Stationary Sources. Volume 1, Final Report, Main Text, and Appendices I through III. The Research Corporation of New England. Wethersfeld, Connecticut. EPA Contract No. 68-02-1382, Task 3. October 1975. p. 15.

7. Hooper, T. G. and W. A. Marrone. Impact of New Source Performance Standards on 1985 National Emissions from Stationary Sources. Volume 1, Final Report, Main Text, and Appendices I through III. The Research Corporation of New England. Wethersfeld, Connecticut. EPA Contract No. 68-02-1382, Task 3. October 1975. p. 59, 63.

8.0 SAMPLING AND ANALYSIS FOR AIR EMISSIONS FROM SULFITE AND NSSC PULP MILLS

This chapter describes methods for sampling and chemical analysis which are applicable to the determination of air emissions from sulfite and NSSC pulp mills. The methods described are applicable to major emission points such as acid fortification towers, digester discharge systems and recovery furnace stacks. Manual methods and methods for continuous monitoring are also described.

The major pollutant emissions from sulfite and NSSC mills are sulfur dioxide, particulates, and in some cases total reduced sulfur species (TRS). Emissions from unit operations such as digester discharge systems and acid fortification towers, contain sulfur dioxide, but negligible concentrations of particulate matter. Emissions from recovery furnaces, spray dryers, and smelt tanks contain particulate matter and sulfur dioxide. Emissions of reduced sulfur compounds are possible from kraft type recovery furnaces, and their associated smelt tanks. Emissions of reduced sulfur species also are possible from sulfiting towers used to prepare NSSC liquor from green liquor.

Measurements of sulfur dioxide and total reduced sulfur concentrations can be made manually using EPA source sampling methods or continuously using instrumental techniques. Accurate measurements of particulate concentrations must be made manually. Approximate particulate concentration can be

monitored continuously. The paragraphs below outline the procedures which are currently used to measure air pollutant emissions from pulp mills.

8.1 MEASUREMENT OF VOLUMETRIC GAS FLOW RATES

To determine the pollutant flow rate in a gas leaving a system, the volumetric flow rate of the gas and the pollutant concentration in the gas must be known. Volumetric flow rates are determined by measuring linear flow rates and multiplying by the cross sectional area of the stack or vent.

EPA Methods 1 through 4 offer a means for obtaining all the information required for determination of volumetric flow rates. These methods are applicable in stacks or ducts with diameters 0.30 meter or greater. The flow in the stack at the sampling point must meet certain stability criteria. EPA Methods 1 through 4 are used with EPA Methods 5 and 6 for manual determination of emission rates for particulates and sulfur dioxide.

EPA Method 1 gives a procedure for locating traverse points in the stack or duct. EPA Method 2 gives the procedure for determining average gas velocity in the stack. EPA Method 3 gives the procedure for calculating the dry molecular weight of a combustion gas by analyzing the gas for carbon dioxide and oxygen. (Method 3 may have to be modified for some pulp mill streams.) Method 4 gives the procedure for determining the moisture content of the gas. Method 5 gives the procedure for determining particulate emissions by collecting particulates on a heated filter. Method 6 gives the procedure for measuring sulfur dioxide concentration in a flue gas.

Once the characteristics of a gas stream are determined, continuous monitoring of gas velocity can be carried out by placing a pitot tube at a point of average gas velocity. The flow rate from small vents can be measured by inserting a pitot tube into an appropriate position in the

vent. Accurate velocity measurements cannot be made using a pitot tube. if the linear flow rate is below 3 or 4 meters per second.

In some cases alternate methods for estimating volumetric flow rates must be used. One alternate method is to use the capacity of the fan used to move the gas as a measure of the flow rate. Other methods of estimating flow rates will depend upon the physical characteristics of the individual emission point. Time (level of effort) limitations imposed on the current screening study precluded retrieval and documentation of information related to accuracy and precision of analytical methods.

8.2 SAMPLE HANDLING AND CONDITIONING

Manual methods for obtaining samples include techniques to withdraw a known amount of sample from the stream, to separate gases and particulates, and to prevent uncontrolled condensation of water vapor. Instruments which have detectors which operate outside the stack also require sample handling and conditioning systems. Careful design and proper operation of such systems is vital to the successful operation of continuous monitors.

The purpose of sample handling and conditioning systems is to transfer the sample from the sampling point to the detector. Usually neither the concentration nor the character of the constituents to be measured should be changed. In some cases interfering species are removed in the sample conditioning step. In other cases controlled chemical changes are effected (*e.g.*, oxidation of reduced sulfur species to sulfur dioxide for determination of TRS).

The sample handling and conditioning system may contain several elements to achieve the goals outlined above. The elements of a sample handling and conditioning system may include: the sample probe, the

conditioning device (or devices), the gas moving system, and sampling lines.

The sample probe may be a stainless steel tube with a 90 degree bend on the end for gas streams containing negligible quantities of particulates. Streams from the digester, acid fortification tower, evaporators, and stock washers contain negligible concentrations of particulate matter.

Sample probes for gas streams containing high concentrations of particulate matter usually include a filtering device. The filtering device may be a porous ceramic probe, a plug of glass wool or a heated filter. Gaseous emissions from recovery furnaces or incinerators, from smelt tanks and from spray dryers contain significant concentrations of particulate matter.

In most systems the major purpose of the conditioning device is to prevent uncontrolled condensation of water vapor in the gas stream. Unwanted condensation can be prevented by keeping the temperature of all parts of the system above the dew point of the gas, by withdrawing moisture through a semipermeable membrane, or by diluting the sample with a dry gas. To dry a gas sample using a membrane, a membrane is used which will selectively allow water vapor to pass through. A dry gas is passed across one side of the membrane and the sample across the other side. Water vapor passes through the membrane from the wet sample gas to the dry receiving gas.

Some gas conditioning systems include components designed to remove interfering species from the sample before the sample reaches the detector As indicated above, some systems change the chemical composition of the

sample in a controlled manner to facilitate detection.

The gas moving system usually includes a pump or aspirator to pull gas through the system. For detectors which must be operated under positive pressure, a positive displacement leakproof vacuum pump must be located upstream of the detector. In many cases the pump or aspirator is located downstream of the detector. Flow controlling and measuring devices are included in the gas moving system.

Sample transfer lines must be large enough to provide a low pressure drop and short enough to provide a low retention time. The material must be inert to avoid loss of the material being measured by physical absorption or chemical reaction. Polyethylene or Teflon are the usual materials. Electrically heated Teflon tubing is commercially available.

8.3 CONCENTRATION MEASUREMENTS

Concentrations of pollutants present in the gas phase can be monitored continuously or manually. Continuous monitoring of major emission streams is a useful tool to determine whether a given mill is meeting emission regulations. Particulate emissions are usually measured manually.

8.3.1 Manual Methods for Measuring Sulfur Dioxide Concentrations

The two leading methods for measuring sulfur dioxide concentrations manually are EPA Method 6 and the Reich test. In EPA Method 6 the filtered gas is first drawn through 80 percent isopropanol to remove sulfur trioxide. After sulfur trioxide is removed, sulfur dioxide is collected and oxidized in impingers containing 3 percent hydrogen peroxide. Sulfur dioxide is determined as sulfate using the barium perchlorate-thorin titration.

In the Reich test the gas stream containing sulfur dioxide is passed through a solution containing a known amount of iodine with some starch indicator. The gas stream is passed through until the color of the iodine

and the starch indicator is almost completely discharged. The volume of gas is measured using a wet test meter.

8.3.2 Methods for Continuous Measurement of Sulfur Dioxide Concentrations

Four instrumental methods are available for monitoring sulfur dioxide emissions from pulp mills.

8.3.2.1 Coulometric Titration

One of the most popular instruments for monitoring sulfur dioxide concentrations in pulp mill effluents uses coulometric titration. An elemental halogen (bromine or iodine) is used to oxidize sulfur dioxide to sulfate. The elemental halogen is generated from the corresponding halide ion (Br^- or I^-) electrolytically.

The instrument is set to maintain a fixed level of elemental halogen. As the concentration of sulfur dioxide increases, the amount of current required to maintain the preset concentration of elemental halogen increases. The current through the cell is converted to an equivalent voltage and the voltage used to operate a continuous recorder. The recorder can be calibrated to give the sulfur dioxide concentration directly. The sensitivity of the instrument can be varied by changing the preset concentration of elemental halogen.

Any species which can be oxidized by the halogen used under the conditions in the cell will interfere with the measurement of sulfur dioxide. Serious interferences are not present in most gas streams from mills using sulfite processes. However, in mills using kraft type reduction furnaces (sodium base sulfite mills) hydrogen sulfide could present serious interferences. Other species which may interfere are organic sulfur gases, olefinic and aromatic hydrocarbons, terpenes, acrolein and NO_2.[1]

8.3.2.2 Electrochemical Membrane Cells

In electrochemical membrane cells the conditioned gas sample passes through a detection cell. One wall of the detection cell is a semipermeable plastic membrane. The sulfur dioxide in the gas selectively diffuses through the membrane and into an electrolyte solution. The sulfur dioxide produces a change in the electrochemical potential across the cell that is directly proportional to the concentration in the sample gas.

Electrochemical membrane cells are more selectively responsive to sulfur dioxide than coulometric titration cells. The cells are reported to respond linearly over a concentration range from 0.01 to 5000 ppm by volume.[2] The gas handling system for the electrochemical membrane cell must include a leakproof vacuum pump upstream of the detector because the membrane cells must be operated under positive pressure.

Particulate matter must be removed from the sample before it enters the detection cell. Water vapor must be removed or reduced before entering the detection cell. Sulfuric acid vapor causes severe corrosion problems.

8.3.2.3 Conductivity Cells

Total sulfur oxides in gas streams from digesters and acid making towers or acid fortification towers may be monitored using conductivity cells. These relatively simple inexpensive nonspecific detectors can be used for these streams because only negligible quantities of interfering conductivity-producing gases or particulates are present. The gas is withdrawn from the duct or flue and passed through a water scrubber. The soluble gases dissolve in the water which is then passed through a conductivity cell.

8.3.2.4 Ultraviolet Spectrophotometry

Sulfur dioxide absorbs ultraviolet radiation; the absorbance maximum is at 280 nm. Assuming that no interferences are present, the amount of ultraviolet radiation (with wavelength approximately 280 nm) absorbed by a gas is proportional to the concentration of sulfur dioxide in the gas. Nitrogen dioxide is an interfering species.

Ultraviolet spectrophotometry can be applied to the gas in the stack or the gas can be withdrawn from the stack for analysis. One instrument provides corrections for nitrogen dioxide interference.

8.3.3 Methods for Manual Measurements of Concentrations of Particulate Matter

EPA Method 5 provides a standard means for measuring concentrations of particulate matter. This method measures only particulate matter collected on a filter maintained at 120 ± 14°C throughout the sampling period. EPA Methods 1-4 are applied simultaneously to locate points for sampling and to determine gas characteristics.

Washington Department of Ecology (DOE) Method 5 uses a sampling train which is essentially identical to that specified by EPA Method 5. The DOE method specifies an acetone wash of all sample exposed surfaces of the sample probe before the filter. In addition, the contents of the impingers downstream from the filter, and the water and acetone rinses of sample exposed surfaces downstream of the filter are collected. All liquid samples are evaporated and the weights of the solid materials obtained are added to the weight of material collected on the filter to determine total particulate concentrations.

An alternate procedure for measurement of particulate concentrations

is to pass the gas sample through an impinger train. The material left over after evaporation of the liquid in the impingers is taken as a measure of the particulate matter in the gas stream. This method generally gives significantly lower particulate concentrations than do methods which employ filters. Two mills in Oregon (belonging to Publisher's Paper Company) are using this method.

8.3.4 Continuous Monitoring of Particulate Emissions

Continuous monitors using bolometers or transmissometers have been used to monitor particulate emissions. These devices are more suitable for detecting upset conditions than for actual measurement of particulate emissions.

8.3.5 Manual Measurement of Hydrogen Sulfide Emissions

EPA Method 11 provides a manual means of measuring hydrogen sulfide emissions. This method is applicable to emissions from kraft type recovery furnaces and associated smelt tanks. It is not applicable to emissions from digesters in mills which produce semichemical pulp using a cooking liquor which contains green liquor. The gases from these digesters contain organic sulfur species such as methyl mercaptan in addition to hydrogen sulfide. Hydrogen sulfide is the main reduced sulfur species present in kraft type recovery furnace flue gases and the emissions from the associated smelt tanks. Significant emission concentrations of other reduced sulfur species can occur in systems when green liquor is used as the cooking liquor.

In this method hydrogen sulfide is collected in a series of midget impingers containing alkaline cadmium hydroxide. After the collection is complete, hydrogen sulfide is released from the precipitated cadmium sulfide. A known amount of acidic iodine solution is used to effect this release. The hydrogen sulfide is oxidized by the iodine and the excess

iodine is back titrated with standard sodium thiosulfate.

8.3.6 Semicontinuous Monitoring of Total Reduced Sulfur (TRS) Compounds

When the concentrations of the different reduced sulfur species making up the TRS emissions is desired, gas chromatography is employed. The application of this method is described in EPA Method 16. Two gas chromatographic columns are used: one for low molecular weight gases and the other for higher molecular weight gases. Flame photometric detection is used.

8.3.7 Continuous Monitoring of TRS

Total reduced sulfur species may be monitored continuously using either coulometric techniques or electrochemical membrane cells. If coulometric detection is used sulfur dioxide must be removed from the sample before it reaches the coulometric titration cell. And, the cell must be calibrated for the particular mixture of reduced sulfur species present in the gas. An alternate procedure is to remove sulfur dioxide from the sample, oxidize the reduced sulfur species to sulfur dioxide and measure the resulting sulfur dioxide concentration. Gas handling and conditioning systems have been designed so that both sulfur dioxide and TRS can be measured coulometrically in the same stream.

To determine TRS using an electrochemical membrane any sulfur dioxide originally present in the sample must be removed. The reduced sulfur species are oxidized to sulfur dioxide and the resulting sulfur dioxide concentration is measured in an electrochemical membrane cell.

REFERENCES

1. Environmental Pollution Control, Pulp and Paper Industry, Part 1, Air. Environmental Protection Agency, Office of Technology Transfer. EPA 625/7-76-001. October 1976. p. 17-7

2. Environmental Pollution Control, Pulp and Paper Industry, Part 1, Air. Environmental Protection Agency, Office of Technology Transfer. EPA 625/7-76-001. October 1976. p. 17-8.

APPENDIX A

LIST OF MILLS PRODUCING WOOD PULP BY THE SULFITE PROCESSES AND MILLS PRODUDUCING SEMICHEMICAL PULP

Table A-1. MILLS IN THE UNITED STATES PRODUCING SULFITE PULP

State	City and County	Company	Address and Telephone	Capacity[a] (Mg/day)	Capacity[a] (tons/day)	Comments
Alaska	Ketchikan Southeastern County	Ketchikan Pulp Co., Div. Louisiana-Pacific Corp. (Exec. office in Portland, OR)	Box 1619 Ketchikan, AK (99901)	558	615	
Alaska	Sitka Southeastern County	Alaska Lumber and Pulp Co. Inc.	Box 1050 Sitka, AK (99835) Phone: 907-747-2265	544	600	
Florida	Fernandina Beach, Nassau County	ITT Rayonier Inc., Fernandina Div. (Exec. Office in New York, NY)	Fernandina Beach, FL (32034) Phone: 904-261-3612	408	450	
Maine	Brewer Penobscot County	Eastern Fine Paper Inc., Affl. of Eddy Paper Co. Ltd. (Exec. office in Hull, Que.)	Box 129 Brewer, ME (04412) Phone: 207-989-7070	(172)[b]	(190)	Mill idle[b]
Maine	Millinocket Penobscot County	Great Northern Paper Co., A Great Northern Nekoosa Co. (Exec. and sub. offices in Stamford, CT)	Millinocket, ME (04462) Phone: 207-723-5131	544[b]	600	
Maine	Winslow Kennebec County	Scott Paper Co., Northeast Oper. (Exec. office in Philadelphia, PA)	Winslow, ME (04901) Phone: 207-872-2751	(440)	(485)	Mill idle[a]
Minnesota	Cloquet Carlton County	Potlatch Corp., Northwest Paper Div. (Exec. office in San Francisco, CA)	Cloquet, MN (55720) Phone: 218-879-2300	(109)	(120)	Mill idle[a]

(Continued)

Page Two
Table A-1. (continued)

State	City and County	Company	Address and Telephone	Capacity (Mg/day)	Capacity (tons/day)	Comments
New York	Glens Falls Warren County	Finch, Pruyn & Co. Inc.	1 Glen St. Glens Falls, NY (12801) Phone: 518-793-2541	272	300	
Oregon	Lebanon Linn County	Crown Zellerbach (Exec. office in San Francisco, CA)	Box 486 Lebanon, OR (97355) Phone: 503-258-3121	91	100	
Oregon	Oregon City Clackamas County	Publishers Paper Co., Sub. of the Times Mirror Co.	419 Main St. Oregon City, OR (97045) Phone: 503-656-5211	209	230	
Oregon	Newberg Yamhill County	Publishers Paper Co., Newberg Div., Sub. of the Times Mirror Co. (Exec. office in Oregon City, OR)	Box 70 Newberg, OR (97132) Phone: 503-538-2151	227	250	
Oregon	Salem Marion County	Boise Cascade Corp., Paper Group Div. (Exec. office in Boise ID) (Div. office in Portland, OR)	315 Commercial St. S. Salem, OR (97301) Phone: 503-362-2421	227[b]	250	
Pennsylvania	Mehoopany Wyoming County	Procter & Gamble Paper Products Co., Sub of the Procter & Gamble Co., (Exec. office in Cincinnati, OH)	Box 32 Mehoopany, PA (18629) Phone not given	218[c]	240[c]	
Washington	Anacortes Skagit County	Scott Paper Co., West Coast Div. (Exec. office in Philadelphia, PA)	Box 190 Anacortes, WA (98221) Phone: 206-293-2144	(127)	(140)	Mill shut down[e] permanently Spring 1978

(continued)

Page Three
Table A-1 (continued)

State	City and County	Company	Address and Telephone	Capacity (Mg/day)	Capacity (tons/day)	Comments
Washington	Bellingham Whatcom County	Georgia-Pacific Corp., Tissue Products Div. (Exec. office in Portland, OR)	300 W. Laurel St. Bellingham, WA Box 1236 (98225) Phone: 206-733-4410	454	500	
Washington	Camas Clark County	Crown Zellerbach (Exec. office in San Francisco, CA)	Camas, WA (98607) Phone: 206-834-3021	400	440	
Washington	Cosmopolis Grays Harbor County	Weyerhaeuser Co., Pulp Div. (Exec. office in Tacoma, WA)	Box 280 Cosmopolis, WA (98537) Phone: 206-532-7110	408	450	
Washington	Everett Snohomish County	Scott Paper Co., Northwest Operations (Exec. office in Philadelphia, PA)	Everett, WA (98201) Phone: 206-259-7333	757	835	
Washington	Hoquiam Grays Harbor County	ITT Rayonier Inc., Grays Harbor Div. (Exec. office in New York, NY)	Box 299 Hoquiam, WA (98550) Phone: 206-532-1410	430	475	
Washington	Longview Cowlitz County	Weyerhaeuser Co., Pulp & Paperboard Div. (Exec. office in Tacoma, WA)	Longview, WA (98632) Phone: 206-425-2150	363	400	
Washington	Port Angeles Clallam County	ITT Rayonier Inc., Port Angeles Div. (Exec. office in New York, NY)	Box 191 Port Angeles, WA (98362) Phone: 206-457-3391	454	500	

(continued)

Page Four
Table A-1 (continued)

State	City and County	Company	Address and Telephone	Capacity (Mg/day)	Capacity (tons/day)	Comments
Wisconsin	Appleton Outagamie County	Consolidated Papers Inc (Exec. office in Wisconsin Rapids, WI)	1130 E. John Appleton, WI (54911) Phone: 414-733-4461	112	123	
Wisconsin	Brokaw Marathon County	Wausau Paper Mills Co.	Brokaw, WI (54417) Phone: 715-675-3361	169	186	
Wisconsin	Green Bay Brown County	American Can Co. (Exec. office in Greenwich, CT)	Day St. Green Bay, WI (54305) Phone: 414-432-7721	136	150	
Wisconsin	Green Bay Brown County	Procter & Gamble Paper Products Co. (Exec. office in Cincinnati, OH)	Box 1510 Green Bay, WI (54305) Phone: 414-468-2200)	377[d]	416[d]	
Wisconsin	Oconto Falls Oconto County	Scott Paper Co. (Exec. office in Philadelphia, PA)	Central Ave. Oconto Falls, WI (54154) Phone: 414-846-3411	(106)	(117)	Mill shut down[d], Spring 1978
Wisconsin	Park Falls Price County	Flambeau Paper Co.	200 N. 1st Ave. Park Falls, WI (54552) Phone: 715-762-3231	100	110	
Wisconsin	Peshtigo Marinette County	Badger Paper Mills Inc.	W. Front St., Box 149 Peshtigo, WI (54157) Phone: 715-582-4551	100	110	
Wisconsin	Port Edwards Wood County	Nekoosa Papers Inc., Sub of Great Northern Nekoosa Corp. (Exec. office in Stamford, CT)	100 Wisconsin River Dr. Port Edwards, WI (54469) Phone: 715-887-5111	195	215	

(continued)

Page Five
Table A-1 (continued)

State	City and County	Company	Address and Telephone	Capacity[a] (Mg/day)	Capacity[a] (tons/day)	Comments
Wisconsin	Rhinelander Oneida County	St. Regis Paper Co., Printing & Packaging Papers Div. (Exec. office in New York, NY)	515 W. Davenport St. Rhinelander, WI (54501) Phone: 715-369-4305	68	75	
Wisconsin	Rothschild Marathon County	Weyerhaeuser Co., Paper Div. (Exec. office in Tacoma, WA)	Box 200 Rothschild, WI (54474) Phone: 715-359-3101	181	200	
TOTAL CAPACITY OF OPERATING SULFITE MILLS IN THE UNITED STATES				8002	8820	

[a] Unless otherwise noted, capacity figures are from a personal communication from Isaiah Gellman, Executive Vice President, National Council of the Paper Industry for Air and Stream Improvement, Incorporated, New York, NY. Letter dated 20 June 1978.
[b] Post's 1978 Pulp and Paper Directory, Miller Freeman Publications, Inc., San Francisco (1977).
[c] Hendrickson, E. R., J. E. Roberson, and J. B. Koogler, Control of Atmospheric Emissions in the Wood Pulping Industry, Volume 1, Final Report: Contract No. CPA 22-69-18. March 15, 1970.
[d] Personal communication with Paul Didier, Wisconsin Bureau of Water Management; telephone report dated 18 July 1978.
[e] Personal communication with Richard Hoover, General Superintendent, Scott Paper Company, Anacortes, Washington, Telephone conversation dated 1 June 1978.

Table A-2. MILLS IN THE UNITED STATES PRODUCING SEMICHEMICAL PULP AND ASSOCIATED WITH KRAFT MILLS

State	City and County	Company	Address and Telephone	Capacity[a] (Mg/day)	Capacity[a] (Tons/day)	Comments
California	Antioch Contra Costa County	Fibreboard Corp., San Joaquin Div. (Exec. Office in San Francisco, CA)	Wilbur Ave. Antioch, CA (94509)	218	240	
Florida	Fernandina Beach Nassau County	Container Corp. of America Sub. of Marcor Inc. (Exec. Office in Chicago, IL)	N 8th St. Fernandina Beach, FL (32034) 904-261-5551	317	350	
Georgia	Cedar Springs Early County	Great Southern Paper Co., A Great Northern Nekoosa Co. (Exec. Office in Stamford, CT)	Box 44 Cedar Springs, GA (31732) 912-372-4541	308	340	
Georgia	Savannah Chatham County	Union Camp Corp. (Exec. Office in Wayne, NJ)	Box 570 Savannah, GA (31402) 912-236-5771	273	300	
Louisiana	Bastrop Morehouse Parish	International Paper Co., Industrial Packaging Div. (Exec. Office in New York, NY)	E. Jefferson., Box 312 Bastrop, LA (71220) 318-281-1211	408	450	
Louisiana	Bogalusa Washington Parish	Crown Zellerbach, Mill Div. (Exec. Office in San Francisco, CA)	Box 1060 Bogalusa, LA (70427) 504-732-2511	136	150	
Louisiana	Hodge Jackson Parish	Continental Forest Industries, Continental Group, Inc. (Exec. Office in New York, NY)	Hodge, LA (71247) 318-259-4421	227	250	

(continued)

Page Two
Table A-2 (continued)

State	City and County	Company	Address and Telephone	Capacity (Mg/day)	Capacity (Tons/day)	Comments
Louisiana	West Monroe Ouachita Parish	Olinkraft Inc. (Exec. Office at this location)	Box 488 West Monroe, LA (71291) 318-362-2000	227	250	
New Hampshire	Berlin Coos County	Brown Co., Paper Group (Exec. Office in Pasadena, CA) (Div. Office in Kalamazoo, MI)	650 Main St. Berlin, NH (03570) 603-752-4600	190	210	
North Carolina	Plymouth Martin County	Weyerhaeuser Co., North Carolina Oper., Fiber Div. (Exec. Office in Tacoma, WA)	Box 746 Plymouth, NC (27962) 919-793-8111	227	250	
Oklahoma	Valliant McCurtain County	Weyerhaeuser Co. (Exec. Office in Tacoma, WA)	Drawer C Valliant, OK (74764) 405-933-7211	725	800	
Oregon	Albany Linn County	Western Kraft Paper Group, Div. of Willamette Industries (Exec. Office in Portland, OR)	Box 339 Albany, OR (97321) 503-926-2281	181	200	
Oregon	Toledo Lincoln County	Georgia-Pacific Corp. (Exec. Office in Portland, OR)	Box 580 Toledo, OR (97391) 503-336-2211	227	250	
South Carolina	Georgetown Georgetown County	International Paper Co., Industrial Packing Div. (Exec. Office in New York, NY)	Box 528 Georgetown, SC (29440) 803-546-6111	1400[b]	1550	

(continued)

Page Three
Table A-2 (continued)

State	City and County	Company	Address and Telephone	Capacity (Mg/day)	Capacity (Tons/day)	Comments
Virginia	Covington Alleghany County	Westvaco Corp., Bleached Board Div. (Exec. Office in New York, NY)	Covington, VA (24426) 703-962-2111	273	300	
Virginia	Hopewell Prince George County	Continental Forest Industries, Continental Group Inc. (Exec. Office in New York, NY)	Box 201 Hopewell, VA (23860) 804-458-9831	159	175	
Washington	Longview Cowlitz County	Longview Fibre Co.	Box 639 Longview, WA (98632) 206-425-1550	200	220	
Washington	Longview Cowlitz County	Weyerhaeuser Co., Pulp & Paperboard Div. (Exec. Office in Tacoma, WA)	Longview, WA (98632) 206-425-2150	218	240	
Washington	Wallula Walla Walla County	Boise Cascade Corp., Paper Group Div. (Exec. Office in Boise, ID) (Div. Office in Portland, OR)	Box 500 Wallula, WA (99363) 509-547-2411	249	275	

[a]Unless otherwise noted, information is from Post's 1978 Pulp and Paper Directory, Miller Freeman Publications, Inc. San Francisco, California (1977)

[b]Hendrickson, E. R., J. E. Roberson, and J. B. Koogler, Control of Atmospheric Emissions in the Wood Pulping Industry, Volume I, Final Report: Contract No. CPA 22-69-18. March 15, 1970.

Table A-3. MILLS IN THE UNITED STATES PRODUCING SEMICHEMICAL PULP WITH NO ASSOCIATED KRAFT MILLS

State	City and County	Company	Address and Telephone	Capacity (Mg/day)	Capacity (Tons/day)	Comments
Alabama	Mobile Mobile County	National Gypsum Co. (Exec. office in Dallas, TX)	Box 1189 Mobile, AL (36601) Phone: 205-433-3971	159[a]	175	
Alabama	Stevenson Jackson County	Mead Corp., The Paperboard Div. Mead Paper Group (Exec. office in Dayton, OH)	Box H Stevenson, AL (35772) Phone: 205-437-2161	680[b]	750	
Indiana	Terre Haute Vigo County	Weston Paper & MFG. Co., The, Terre Haute Mill	Prairieton Rd. & Voorhees St. Terre Haute, IN (47808) Phone: 812-234-6688	245[b]	270	
Iowa	Dubuque Dubuque County	Celotex Corp., The, Sub. of of Jim Walter Corp. (Exec. office in Tampa, FL)	Box 569 Dubuque, IA (52001) Phone: 319-588-1481	227[a]	250	
Iowa	Fort Madison Lee County	Consolidated Packaging Corp. (Exec. office in Chicago, IL)	Box 250, Foot of 18th St. Fort Madison, IA (52627) Phone: 319-372-3152	127[b]	140	
Kentucky	Hawesville Hancock County	Western Kraft Paper Group, Williamette Industries Inc. Wescor Div.	Box 159 Hawesville, KY (42348) Phone: 502-927-2641	250[b]	275	
Michigan	Filer City Manistee County	Packaging Corp. of America, Div. of Tenneco, Inc. (Exec. office in Evanston, IL)	Filer City, MI (49634) Phone: 616-723-9951	544[b]	600	

(continued)

Page Two
Table A-3 (continued)

State	City and County	Company	Address and Telephone	Capacity (Mg/day)	Capacity (Tons/day)	Comments
Michigan	Ontonagon Ontonagon County	Hoerner Waldorf, Div. of Champion International Corp. (Exec. office in St. Paul, MN)	115 Lakeshore Rd. Ontonagon, MI (49953) Phone: 906-884-4121	400[b]	440	
Michigan	Otsego Allegan County	Menasha Corp., Paperboard Div. (Exec. office in Neenah, WI)	320 N. Farmer St., Box 155 Otsego, MI (49078) Phone: 616- 692-6141	204[b]	225	
Minnesota	Saint Paul Ramsey County	Hoerner Waldorf, Div. of Champion International Corp., St. Paul Mill (Exec. office in Stamford, CT)	2250 Wabash Ave. Saint Paul, MN Box 3260 (55165) Phone: 612-641-498	318[a]	350	
Mississippi	Meridian Lauderdale County	Flintkote Co., The (Exec. office in Stamford, CT)	Box 1551 Meridian, MS (39301) Phone: 601-482-0151	45[a]	50	
New Hampshire	Groveton Coos County	Groveton Papers Co., Sub. of Diamond International Corp. (Exec. office in New York, NY)	Groveton, NH (03582) Phone: 603-636-1154	272[b]	300	
New York	Lyons Falls Lewis County	Georgia-Pacific Corp., Lyons Falls Div. (Exec. office in Portland, OR)	Lyons Falls, NY (13368) Phone: 315-348-8411	109[a]	120	

(continued)

Page Three
Table A-3 (continued)

State	City and County	Company	Address and Telephone	Capacity (Mg/day)	Capacity (Tons/day)	Comments
New York	Plattsburgh Clinton County	Georgia-Pacific Corp., Tissue Products Div. (Exec. Office in Portland, OR)	Box 789 Plattsburgh, NY (12901) 518-561-3500	91[a]	100	
North Carolina	Sylva	Sylva Paperboard	Not Listed in Post's Directory	(245)[b]	(270)	Mill idle[a]
Ohio	Circleville Pickaway County	Container Corp. of America, Sub. of Marcor, Inc. (Exec. Office in Chicago, IL)	401 W. Mill St. Circleville, OH (43113) 614-474-2146	272[b]	300	
Ohio	Coshocton Coshocton County	Stone Container Corp. (Exec. Office in Chicago, IL)	500 N. Fourth St. Coshocton, OH (43812) 614-622-6543	408[b]	450	
Oregon	North Bend Coos County	Menasha Corp., Paperboard Div. (Exec. Office in Neenah, WI)	Box 329 North Bend, OR (97459) 503-756-5171	181[b]	200	
Pennsylvania	Erie Erie County	Hammermill Papers Group Div. of Hammermill Paper Co. Erie Plant	East Lake Road, Box 1440 Erie, PA (16533) 503-756-5171	350[c]	385	B&W recovery listed
Pennsylvania	Sunbury Northumberland County	Celotex Corp., Sub. of Jim Walter Corp (Exec. Office in Tampa, FL)	Front & Susquehanna St. Sunbury, PA (17801) 717-286-5831	217[a]	240	
Puerto	Arecibo Arecibo District	Caribe Inc., Productos Forestales, Arecibo Mill	Box 695 Arecibo, PR (00612) 809-878-7100	113[a]	125	

(continued)

Page Four
Table A-3 (continued)

State	City and County	Company	Address and Telephone	Capacity (Mg/day)	Capacity (Tons/day)	Comments
South Carolina	Hartsville Darlington County	Sonoco Products Co. (Exec. Office at this location)	N. Second St. Hartsville, SC (29550) 803-383-7000	408[b]	450	
Tennessee	Harriman Roane County	Harriman Paperboard Corp., Div. of Lawrence Paperboard Corp.	Emory St. Harriman, TN (37748) 615-882-1812	227[b]	250	
Tennessee	New Johnsonville Humphreys County	Inland Container Corp. (Exec. Office in Indianapolis, IN)	Box 299 New Johnsonville, TN (37134) 615-535-2161	358[b]	395	
Virginia	Big Island Bedford County	Owens-Illinois Inc., Forest Products Div. (Exec. Office in Toledo, OH)	Big Island, VA (24526) 804-299-5911	522[a]	575	
Virginia	Lynchburg Campbell County	Mead Corp., Mead Paper-Board Products, Mead Paperboard Group (Exec Office in Dayton, OH)	Box 980 Lynchburg, VA (24505) 804-847-5521	(172)[b]	(190)	Mill Idle
Virginia	Riverville Amherst County	Virginia Fibre Corp. Riverville Mill	Riverville, VA Box 339, Amherst, VA (24521) 804-933-8643	463[a]	510	

(continued)

Page Five
Table A-3 (continued)

State	City and County	Company	Address and Telephone	Capacity (Mg/day)	Capacity (Tons/day)	Comments
Wisconsin	Green Bay Brown County	Green Bay Packaging Inc., Paper Mill Div. (Exec. Office in Green Bay, WI)	Box 1107 Green Bay, WI (54305) 414-465-5000	181[b]	200	
Wisconsin	Tomahawk Lincoln County	Owens-Illinois Inc. (Exec. Office in Toledo, OH)	Tomahawk, WI (54487) 715-453-2131	526[a]	580	
			Total Capacity of Operating Semichemical Mills Not Associated with Kraft Mills	7897	8705	

[a] Post's 1978 Pulp and Paper Directory, Miller Freeman Publications, Inc., San Francisco, California (1977).

[b] Personal communication with Isaiah Gillman, Executive Vice President, National Council of the Paper Industry for Air and Stream Improvement, Inc., New York, NY. Letter dated 20 June 1978.

[c] Hendrickson, E. R., J. E. Roberson, and J. B. Koogler, Control of Atmospheric Emissions in the Wood Pulping Industry, Volume 1, Final Report: Contract No. CPA 22-69-18. March 15, 1970.

APPENDIX B

SULFITE PULPING MODEL IV CALCULATION

SULFITE PULPING MODEL IV CALCULATION

The symbols used in the Model IV calculation are defined in Table G-1.

1. Assume[1] a straight line construction and modification rate to replace obsolete capacity: $P_b = 0.031$

2. Assume a compound construction and modification rate to increase (decrease) industry capacity

Year	Sulfite Pulp Capacity (Gg/day)	P_c Fractional Increase (Decrease)
1967	9.050	-0.0122
1968	8.825	-0.0108
1969	8.675	-0.0100
1970	8.530	-0.0091
1971	8.450	-0.0090
1972	8.325	-0.0079
1973	8.350	-0.0106
1974	8.500	-0.0199
1975	8.365	-0.0219
1976	8.235	-0.0283
1977	8.002	--
AVERAGE		-0.0140

Sulfite pulp capacity is determined by adding 50% of the dissolving pulp grade capacity to the sulfite paper grade capacity in Figure 3-3.

The baseline year is 1977. P_c is calculated from the following equation.

$$P_c = \sqrt[1977-X]{\frac{\text{Capacity}(1977)}{\text{Capacity }(X)}} - 1 \qquad \text{(B-1)}$$

3. A equals the sum of the sulfite pulping capacity by all four chemical bases. Therefore,

Table B-1. SYMBOLS USED IN MODEL IV CALCULATION

T_S	= total emissions in the ith year under baseline year regulations (tons/yr)
T_N	= total emissions in i^{th} year under new or revised NSPS which have been promulgated in the jth year (tons/yr)
K	= normal fractional utilization rate of existing capacity, assumed constant during time interval
A	= baseline year production capacity (production units/yr)
B	= production capacity from construction and modification to replace obsolete facilities (production units/yr)
C	= production capacity from construction and modification to increase output above baseline year capacity (production units/yr)
P_b	= construction and modification rate to replace obsolete capacity (decimal fraction of baseline capacity/yr)
P_c	= construction and modification rate to increase indsutry capacity (decimal fraction of baseline capacity/yr)
Es	= allowable emissions under existing regulations (mass/unit capacity)
En	= allowable emissions under standards of performance (mass/unit capacity)
Eu	= emissions with no control (mass/unit capacity)

$A = Ca + Mg + Na + NH_3$

$= 1.151 + 3.617 + 0.430 + 2.804$

$= 8.002$ Gg/day

4. K = 0.91 (from Section 3.2.3)

5. Uncontrolled emissions (Eu) are calculated as follows:

	SO_2 (Mg/Gg pulp)	Particulate (Mg/Gg pulp)
Digester discharge	29.0	--
Acid plant	2.5	--
Recovery system		
Ca --		--
Mg $\left(\frac{3617}{8002}\right)(11.0) = 4.97$		$\left(\frac{3617}{8002}\right)(1.6) = 0.72$
Na $\left(\frac{430}{8002}\right)(27.0) = 1.45$		$\left(\frac{430}{8002}\right)(5.0) = 0.27$
NH_3 $\left(\frac{2804}{8002}\right)(8.4) = 2.94$		$\left(\frac{2804}{8002}\right)(2.3) = 0.81$
	9.36	1.8
	40.86	1.8

6. Allowable emissions (En) under standards of performance are calculated as follows:

	SO_2 (Mg/Gg pulp)	Particulate (Mg/Gg pulp)
Digester discharge	0.2	--
Acid plant	0.2	--
Recovery system		
Ca --		
Mg $\left(\frac{3617}{8002}\right)(5.9) = 2.67$		$\left(\frac{3617}{8002}\right)(1.6) = 0.72$
Na $\left(\frac{430}{8002}\right)(0.1) = 0.01$		$\left(\frac{430}{8002}\right)(1.4) = 0.08$
NH_3 $\left(\frac{2804}{8002}\right)(4.2) = 1.47$		$\left(\frac{2804}{8002}\right)(0.4) = 0.14$
	4.15	0.94
	4.55	0.94
	En = (1.3)(4.55) = 5.92	En = (1.3)(0.94) = 1.22

A new standard cannot be set at average best controlled emission level for all sulfite systems. This would imply that a mill would have to achieve lower emissions than the best controlled emission level in order to be in compliance with the new standard. Therefore, an adjustment factor (1.3) is included to increase the emission limit for the new standard.

7. Allowable emissions (Es) under existing regulations are calculated as follows:

$$Es = \sum_{i=1}^{N} Es_i A_i \qquad \text{(B-2)}$$

where Es_i = Emission limitation in i^{th} state

A_i = Decimal fraction of total capacity located in i^{th} state

i = Individual state

N = Total number of states over which capacity is distributed.

If a state had sulfite pulping capacity, but no specific sulfite regulations, then Es_i = Eu.

SULFUR DIOXIDE

State	$Es_i A_i$
Alaska	$(10 \text{ Mg/Gg pulp})\left(\frac{1102}{8002}\right) = 1.38$
Florida	$(40.86 \text{ Mg/Gg pulp})\left(\frac{408}{8002}\right) = 2.08$
Maine	$(20 \text{ Mg/Gg pulp})\left(\frac{544}{8002}\right) = 1.36$
New York	$(40.86 \text{ Mg/Gg pulp})\left(\frac{272}{8002}\right) = 1.39$
Oregon	$(10 \text{ Mg/Gg pulp})\left(\frac{754}{8002}\right) = 0.94$
Pennyslvania	$(40.86 \text{ Mg/Gg pulp})\left(\frac{218}{8002}\right) = 1.11$
Washington	$(10 \text{ Mg/Gg pulp})\left(\frac{3266}{8002}\right) = 4.08$
Wisconsin	$(40.86 \text{ Mg/Gg pulp})\left(\frac{1438}{8002}\right) = 7.34$
	19.68 Mg/Gg pulp

PARTICULATES

State	Es_iA_i	
Alaska	$(1.0 \text{ Mg/Gg pulp})\left(\frac{1102}{8002}\right)$	= 0.14
Florida	$(1.8 \text{ Mg/Gg pulp})\left(\frac{408}{8002}\right)$	= 0.09
Maine	$(1.8 \text{ Mg/Gg pulp})\left(\frac{544}{8002}\right)$	= 0.12
New York	$(1.8 \text{ Mg/Gg pulp})\left(\frac{272}{8002}\right)$	= 0.06
Oregon	$(2.0 \text{ Mg/Gg pulp})\left(\frac{754}{8002}\right)$	= 0.19
Pennsylvania	$(1.8 \text{ Mg/Gg pulp})\left(\frac{218}{8002}\right)$	= 0.05
Washington	$(2.0 \text{ Mg/Gg pulp})\left(\frac{3266}{8002}\right)$	= 0.82
Wisconsin	$(1.8 \text{ Mg/Gg pulp})\left(\frac{1438}{8002}\right)$	= 0.32
		1.79 Mg/Gg pulp

8. $B = AiP_b = (8.002 \text{ Gg pulp})(1983-1977)(0.031)$
$= 1.488 \text{ Gg pulp/day}$

9. $C = A[(1 + P_c)^i - 1] = (8.002 \text{ Gg pulp})[(1 - 0.0140)^{(1983-1977)} - 1]$
$= -0.649 \text{ Gg pulp/day}$

10. SULFUR DIOXIDE

$T_S = EsK(A + C) = (19.68 \text{ Mg } SO_2/\text{Gg pulp})(.91)(8.002-0.649 \frac{\text{Gg pulp}}{\text{day}})$

$= 131.7 \text{ Mg } SO_2/\text{day}$

$T_N = EsK(A - B) + EnK(B + C)$

$= (19.68 \text{ Mg } SO_2/\text{Gg pulp})(.91)(8.002 - 1.488 \text{ Gg pulp/day}) + (4.55 \text{ Mg } SO_2/\text{Gg pulp})(.91)(1.488 - 0.649 \text{ Gg pulp/day})$

$= 120.1 \text{ Mg } SO_2/\text{day}$

$T_S - T_N = (131.7 - 120.1) \text{ Mg SO /day} = 11.6 \text{ Mg } SO_2/\text{day}$

$= (12.8 \text{ ton } SO_2/\text{day})$

11. PARTICULATES

$T_S = EsK(A + C) = (1.79 \text{ Mg part./Gg pulp})(.91)(8.002 - 0.649 \text{ Gg pulp/day})$

$= 11.98 \text{ Mg part/day}$

$$T_N = EsK(A - B) + EnK\ (B + C)$$

$$= (1.79\ \text{Mg part/Gg pulp})(.91)(8.002 - 1.488\ \text{Gg pulp/day}) + (0.94\ \text{Mg part/Gg pulp})(.91)(1.488 - 0.649\ \text{Gg pulp/day})$$

$$= 11.33\ \text{Mg part/day}$$

$$T_S - T_N = (11.98 - 11.33)\text{Mg part/day} = 0.65\ \text{Mg part/day}$$
$$(0.72\ \text{ton part/day})$$

REFERENCES

1. Hooper, T. G. and W. A. Marrone. Impact of New Source Performance Standards on 1985 National Emissions from Stationary Sources. Volume I, Final Report, Main Text, and Appendices I through III. The Research Corporation of New England. Wethersfeld, Connecticut. EPA Contract No. 68-02-1382, Task 3. October 1975. p. 63.

TECHNICAL REPORT DATA
(Please read Instructions on the reverse before completing)

1. REPORT NO. EPA-450/3/78-111	2.	3. RECIPIENT'S ACCESSION NO.
4. TITLE AND SUBTITLE Screening Study on Feasibility of Standards of Performance for Two Wood Pulping Processes		5. REPORT DATE Issued November 1978
		6. PERFORMING ORGANIZATION CODE
7. AUTHOR(S) C. M. Thompson, W. C. Micheletti, J. C. Terry		8. PERFORMING ORGANIZATION REPORT NO.
9. PERFORMING ORGANIZATION NAME AND ADDRESS Radian Corporation 8500 Shoal Creek Blvd. Austin, Texas 78758		10 PROGRAM ELEMENT NO.
		11. CONTRACT/GRANT NO EPA 68-02-2608
12. SPONSORING AGENCY NAME AND ADDRESS Environmental Protection Agency Office of Air Quality Planning and Standards Emission Standards and Engineering Division Research Triangle Park, N. C. 27711		13. TYPE OF REPORT AND PERIOD COVERED Final
		14. SPONSORING AGENCY CODE EPA/200/04
15. SUPPLEMENTARY NOTES		

16. ABSTRACT

This report is a screening study for the sulfite and neutral sulfite semichemical (NSSC) wood pulping processes. The purpose of the screening study is to develop background information on both pulping processes and to advise on the feasibility and need for standards of performance for either or both of them. This report provides a general industry description and discusses in detail the operation of both wood pulping processes. Potential emission sources are identified, as well as available methods of emission control. In addition, existing applicable regulations are summarized, national emissions are estimated, and specific analytical methods are discussed.

17. KEY WORDS AND DOCUMENT ANALYSIS

a. DESCRIPTORS	b. IDENTIFIERS/OPEN ENDED TERMS	c. COSATI Field/Group
Air Pollution Control Equipment Pulp Manufacture Sulfite Pulping Performance Standards	Air Pollution Control Stationary Sources Wood Pulping	

18. DISTRIBUTION STATEMENT Unlimited	19. SECURITY CLASS (This Report) Unclassified	21. NO. OF PAGES 190
	20 SECURITY CLASS (This page) Unclassified	22 PRICE

EPA Form 2220-1 (Rev. 4-77) PREVIOUS EDITION IS OBSOLETE