United States
Environmental Protection
Agency

Industrial Environmental Research
Laboratory
Research Triangle Park NC 27711

EPA-600/7-78-150
July 1978

EPA

Assessment of Coal Cleaning Technology: First Annual Report

Interagency Energy/Environment R&D Program Report

RESEARCH REPORTING SERIES

Research reports of the Office of Research and Development, U.S. Environmental Protection Agency, have been grouped into nine series. These nine broad categories were established to facilitate further development and application of environmental technology. Elimination of traditional grouping was consciously planned to foster technology transfer and a maximum interface in related fields. The nine series are:

1. Environmental Health Effects Research
2. Environmental Protection Technology
3. Ecological Research
4. Environmental Monitoring
5. Socioeconomic Environmental Studies
6. Scientific and Technical Assessment Reports (STAR)
7. Interagency Energy-Environment Research and Development
8. "Special" Reports
9. Miscellaneous Reports

This report has been assigned to the INTERAGENCY ENERGY-ENVIRONMENT RESEARCH AND DEVELOPMENT series. Reports in this series result from the effort funded under the 17-agency Federal Energy/Environment Research and Development Program. These studies relate to EPA's mission to protect the public health and welfare from adverse effects of pollutants associated with energy systems. The goal of the Program is to assure the rapid development of domestic energy supplies in an environmentally-compatible manner by providing the necessary environmental data and control technology. Investigations include analyses of the transport of energy-related pollutants and their health and ecological effects; assessments of, and development of, control technologies for energy systems; and integrated assessments of a wide range of energy-related environmental issues.

EPA REVIEW NOTICE

This report has been reviewed by the participating Federal Agencies, and approved for publication. Approval does not signify that the contents necessarily reflect the views and policies of the Government, nor does mention of trade names or commercial products constitute endorsement or recommendation for use.

This document is available to the public through the National Technical Information Service, Springfield, Virginia 22161.

EPA-600/7-78-150
July 1978

Assessment of Coal Cleaning Technology:
First Annual Report

by

Lee C. McCandless and Robert B. Shaver

Versar, Inc.
6621 Electronic Drive
Springfield, Virginia 22151

Contract No. 68-02-2199
Program Element No. EHE624A

EPA Project Officer: James D. Kilgroe

Industrial Environmental Research Laboratory
Office of Energy, Minerals, and Industry
Research Triangle Park, NC 27711

Prepared for

U.S. ENVIRONMENTAL PROTECTION AGENCY
Office of Research and Development
Washington, DC 20460

ACKNOWLEDGMENT

The preparation of this Coal Cleaning Technology Development Annual Report was accomplished through the efforts of the staff at Versar, Inc., Springfield, Virginia, under the direction of Dr. Robert G. Shaver, Vice President and Mr. Lee C. McCandless, Operations Manager.

Acknowledgment is given to the staff of Denver Equipment Division, Joy Manufacturing Company, Denver, Colorado, under the guidance of Dr. Thomas Plouf for their work on the program.

Mr. James D. Kilgroe, Project Officer, Fuels Process Branch, Energy Assessment and Control Division, through his assistance and direction, made a valuable contribution to the preparation of this report.

Also our appreciation is extended to the Versar and Joy/Denver staff with special thanks to:

Versar, Inc.	Denver Equipment Div., Joy/Denver Co.
Mrs. Gayaneh Contos	Mr. Les Apodaca
Dr. Irwin Frankel	Mr. Williams Higgins
Mrs. Deborah Guinan	Mr. Roger Harkins
Mrs. Jean Moore	
Mrs. Judi Robinson	
Mr. Donald Sargent	

Appreciation is also given to the secretarial staff of Versar, Inc., for their efforts in typing this document.

CONTENTS

Acknowledgment ii
Figures v
Tables vii

1. Introduction 1
   Project scope 2
2. Coal Characteristics. 3
   Types of sulfur. 3
   Coal washability data. 4
   Equipment performance. 9
   Development of ash-sulfur correlations from washability data 11
3. Current Process Technology For Physical Coal Cleaning 22
   Introduction 22
   Breakers and crushers 26
   Screens. 33
   Jigs 37
   Wet concentrating tables 44
   Hydrocyclones. 48
   Heavy media cyclones 51
   The Otisca process 56
   Cone concentrators 60
   Vor-Siv. 61
   Spiral concentrators 62
   Vorsyl 63
   Flotation 64
4. Current Process Technology For Chemical Coal Cleaning 70
   Magnex (SM) process 74
   Syracuse process 74
   Meyers process 77
   Ledgemont process 77
   ERDA process 80
   GE process 80
   Battelle process 83
   JPL process 83
   IGT process 86
   KVB process 86
   Summary of minor and miscellaneous processes 89
   Process and cost comparison 93
5. Current Process Technology For Fine Coal Dewatering And Drying 104
   Introduction 104

CONTENTS

(continued)

Mechanical dewatering devices 107
Thermal drying 127
Oil agglomeration 132
6. Coal Slurry Sampling 135
Summary of slurry sampling information 135
Other samplers and sampling systems. 136
Bias test plan for two slurry samplers at Homer City coal preparation plant 138
7. Coal Preparation Requirements For Synthetic Fuel Conversion Processes 140
Particle size 140
Total moisture content 142
Ash content 144
Sulfur content 145
Heating value 145
Effect of coal beneficiation on coal conversion and utilization 146
Summary of coal preparation requirements for commercial and federal government sponsored synthetic fuel processes 147

FIGURES

Number		Page
1	Washability curve of an "easily cleanable coal"	6
2	Washability curve of an "average cleanable" coal	7
3	Washability curve of a "difficulty cleanable" coal	8
4	Distribution curve illustrating specific gravity of separation	10
5	Generalized distribution curve for data represented in figure 4	10
6	Change in sulfur/ash ratio with gravity cleaning of 75 selected coal samples	14
7	Fraction of original pyrite content in coal floating at 1.40 S.G.	15
8	Coal constitutent data for Northern Appalachian Region	18
9	Sectional view of hammermill	31
10	A typical ring crusher	32
11	Baum Jig cross section	41
12	Generalized distribution curve for Baum Jig treating a 15 cm (6 in.) by 48- mesh composite feed	43
13	Batac Jig cross section	45
14	The distribution of table products by particle size and specific gravity	47
15	A typical hydrocyclone	51
16	A dense medium cyclone	53
17	Basic-media-only coal beneficiation plant	59
18	Relationship between pH and product recovery	66
19	Flotation cell	68
20	Magnex (SM) process flow sheet	75
21	Syracuse coal comminution process flow sheet	76
22	Process flowsheet for the (Meyers') process	78
23	Ledgemont oxygen leaching process flow sheet	79

FIGURES

(continued)

Number		Page
24	ERDA process flow sheet	81
25	General Electric microwave process flow sheet	82
26	Battelle hydrothermal process flow sheet	84
27	JPL process flow sheet	85
28	IGT process flow sheet	87
29	KVB process flow sheet	88

TABLES

Number		Page
1	Relation of pyrite to other minerals in coal separated at 1.40 S.G. (float fraction)	17
2	Summary of physical coal cleaning unit operations	23
3	Vibrating screen equipment for coal preparation service	38
4	Screen equipment for coal preparation service	39
5	Heavy media cyclone operating results for 31.75 x 0.75 mm. raw coal feed (1 1/4 x 1/32 in.)	55
6	Process information summary of major chemical coal cleaning processes	71
7	Process information summary of minor chemical coal cleaning proccesses	90
8	Process information summary of miscellaneous chemical coal cleaning processes	92
9	Process performance and cost comparison for major chemical coal cleaning processes	95
10	Operating cost comparisons for major chemical coal cleaning processes	98
11	Cost effectiveness and other comparisons of chemical coal cleaning processes	101
12	Fine coal dewatering and handling equipment	106
13	Summary status of coal preparation for high BTU gasification processes	148
14	Summary status of coal preparation for low BTU gasification processes	149
15	Summary status of coal preparation for liquefaction processes	151
16	Metric units conversion table	153

SECTION 1

INTRODUCTION

Under the Clean Air Act of 1970 and its subsequent Amendment of 1977, the U.S. Environmental Protection Agency is charged with promulgating standards and implementing state and federal plans for reduction of sulfur dioxide emissions to the atmosphere. In 1974, sulfur dioxide emissions from coal combustion were in excess of 18.6 million metric tons (20.5 million tons). With a large projected increase in U.S. use of coal under the National Energy Plan, improved sulfur dioxide controls are quickly needed. Industrial coal consumption is predicted to quadruple from 62 million metric tons (68 million tons) in 1975 to 251 million metric tons (277 million tons) in 1985. Utility coal consumption is projected to increase from 366 million metric tons (404 million tons) to 707 million metric tons (779 million tons).

Near-term control options consist of flue gas desulfurization and physical coal cleaning. Future options appear to be chemical coal cleaning, use of synthetic fuels and fluidized bed combustion. Physical coal cleaning may prove to be the most cost-effective method for reducing sulfur dioxide emissions from small boilers, since many small industrial users will find flue gas desulfurization too costly. Large industrial users and electric utilities may realize substantial savings by using both physical coal cleaning and flue gas desulfurization.

An evaluation of washability data published by the U.S. Bureau of Mines in RI 8118 indicates that specific gravity separation conditions now commonly used for removal of ash from coal can remove 25 to 55 percent of the pyrite from U.S. coals. Advanced physical coal cleaning techniques may be capable of removing up to 90 percent of the pyritic sulfur in coals, corresponding to a total sulfur reduction in coal ranging from 30 to 60 percent. The degree of desulfurization depends on the initial sulfur level in the raw coal, the ratio of pyritic to organic sulfur, the size distribution of the

pyrite in the coal and the preparation techniques used. Based upon specific gravity separation methods, the desulfurization potential of U.S. coals varies among coal regions and also among coal beds within the same region.

PROJECT SCOPE

This report covers the initial ten months of a three-year contract with the EPA Industrial Environmental Research Laboratory, Research Triangle Park, North Carolina. The primary objective of this project is to evaluate physical and chemical coal cleaning technology for removal of sulfur from coal.

The program contains six major technical tasks:

- The collection of existing data on sulfur removal by physical coal cleaning equipment;
- The generation of new data and the evaluation of physical coal cleaning technology for sulfur removal;
- The evaluation of equipment and costs for fine coal dewatering and handling;
- The assessment of coal preparation requirements for synthetic fuel conversion processes;
- The performance of studies on physical coal preparation processes to evaluate the trade-offs between sulfur removal and costs; and
- The evaluation of chemical coal cleaning processes.

Task methodology includes literature searches and manufacturer contacts, compilation of data from many representative sources (Bureau of Mines and other governmental organizations researching this area, industrial research facilities and commercial sources), testing and evaluation of currently operational equipment and cost evaluation of various processes. In addition, recent technological developments in fine coal dewatering and coal cleaning are being evaluated.

SECTION 2

COAL CHARACTERISTICS

A major portion of the sulfur dioxide pollution problem in the U.S. is attributable to the combustion of coal. Removing sulfur dioxide from stack gases by scrubbing has proven to be an effective, but expensive process. By removing the sulfur from the coal prior to combustion, the need for scrubbing can be reduced, or in some cases eliminated. The effectiveness of methods for removal of sulfur from coal prior to combustion depends upon the relative percentages of the types of sulfur in the coal.

TYPES OF SULFUR

There are three general forms of sulfur found in coal: organic, pyritic, and sulfate sulfur. Sulfate sulfur is present in the smallest amount (0.1 percent by weight or less). The sulfate sulfur is usually water soluble, originating from in-situ pyrite oxidation and can be removed by washing the coal. Mineral sulfur occurs in either of the two dimorphous forms of ferrous disulfide (FeS_2) - pyrite or marcasite. The two minerals have the same chemical composition, but have different crystalline forms. Sulfide sulfur occurs as individual particles (0.1 micron to 25 cm. in diameter) distributed through the coal matrix. Pyrite is a dense mineral (4.5 gm/cc) compared with bituminous coal (1.30 gm/cc); and is quite water-insoluble, thus the best physical means of removal is by specific gravity separation. The organic sulfur is chemically bonded to the organic carbon of the coal; and cannot be removed unless the chemical bonds are broken. The amount of organic sulfur present, defines the lowest limit to which a coal can be cleaned with respect to sulfur removal by physical methods. Chemical coal cleaning processes, currently in the developmental stage, are designed to attack and remove up to 40% of the organic sulfur.

The various physical cleaning processes employed are based upon physical or physical-chemical differences between coal and its associated impurities. The most commonly employed property is density: "pure" bituminous coal having a specific gravity of about 1.3, "shale" about 2.0 to 2.7, and "pyrite" about 4.8 to 5.0.

COAL WASHABILITY DATA

The potential for improving the quality of a coal through physical coal cleaning is determined by a series of tests called the washability of that coal. To determine the preparation method and the equipment used to clean the coal, the preparation engineer must conduct physical and chemical tests to obtain washability data. The coal is split into subsamples, by size and specific gravity distribution, which are then analyzed for moisture, ash, heating value, pyritic and total sulfur, and other characteristics. The test procedure may embrace all or only several of the above characteristics, depending on the information required. Washability studies are conducted primarily to determine the yield and quality of clean coal produced at a given specific gravity. These data are for a specific coal at a specific size and are often presented in the following tabular format.[1]

WASHABILITY DATA

	Individual Fractions			Cumulative Float		
Specific Gravity	Wt %	Ash%	Ash Prod.	Wt %	Ash Prod.	Ash %
SINK FLOAT 1.27	34.5	2.8	96.6	34.5	96.6	2.8
1.27 X 1.30	28.4	3.9	110.8	62.9	207.4	3.3
1.30 X 1.38	16.9	8.8	148.7	79.8	356.1	4.5
1.38 X 1.50	5.4	16.9	91.3	85.2	447.4	5.3
1.50 X 1.70	3.3	30.6	101.0	88.5	548.4	6.2
1.70 X 1.90	3.0	46.2	138.6	91.5	687.0	7.5
1.90	8.5	71.3	606.1	100.0	1293.1	12.9

These results can be plotted in a number of ways to produce a set of curves which are characteristic of the coal.

Three such curves are reproduced and shown on the following pages as Figures 1, 2 and 3. They represent run-of-mine samples with varying degrees of washability. In each figure three separate curves are given: curve A is the curve of instantaneous ash content of the float fraction, which is commonly called the characteristic curve; curve B shows the cumulative ash content of the float fractions; and curve C shows the cumulative ash content of the sink fraction. Similar curves can be drawn for pyritic sulfur and total sulfur content.

Figure 1 -- This is the curve of a readily cleanable coal. Curve A, the characteristic curve, flattens abruptly at a specific gravity of 1.5, and at this natural "cut point" an effective separation between coal and ash could be made easily. At this specific gravity a product yield of about 67 percent clean coal with an ash content of about 10 percent could be expected.

Figure 2 -- This is the curve of a coal of average cleanability, the gradual flattening of the characteristic curve showing no well-defined cut point. At any specific gravity in the range of 1.5 to 1.6 the separated fractions would contain a certain proportion of "middlings"; that is, particles consisting of both coal and ash. In other words there would be some ash in the coal and some coal in the ash.

Figure 3 --This is the curve of a difficult coal to clean by specific gravity methods. The characteristic curve shows no cut point at all but a gradual increase in yield and ash content from pure coal to pure ash. In such a case the specific gravity at which separation was made would have to be an arbitrary compromise based on market conditions. The figure shows a coal yield of 40 percent with about 8 percent ash, with the middlings amounting to 35 percent.

Middlings can be handled in two ways. The coal and ash can be broken apart by crushing and then separated by re-washing; though in some types of

FIGURE 1 WASHABILITY CURVE OF AN "EASILY CLEANABLE" COAL

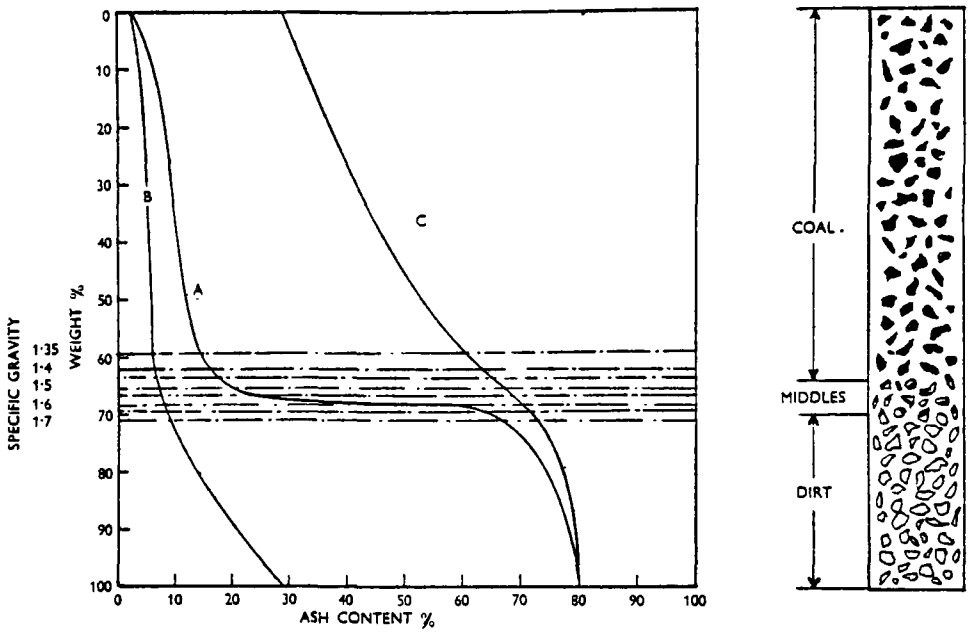

Float-sink analysis

	Weight %	Elementary ash %	Cumulative ash %
Floats at 1·35 sp. gr.	59·4	5·8	5·8
,, 1·40 ,,	2·6	15·3	6·2
,, 1·45 ,,	1·7	16·7	6·5
,, 1·50 ,,	1·5	18·9	6·8
,, 1·55 ,,	1·5	22·1	7·1
,, 1·60 ,,	1·4	40·0	7·8
,, 1·65 ,,	1·5	60·5	8·9
,, 1·70 ,,	1·4	65·5	10·0
Sinks at 1·70 ,,	29·0	73·3	28·4

FIGURE 2 WASHABILITY CURVE OF AN "AVERAGE CLEANABLE" COAL

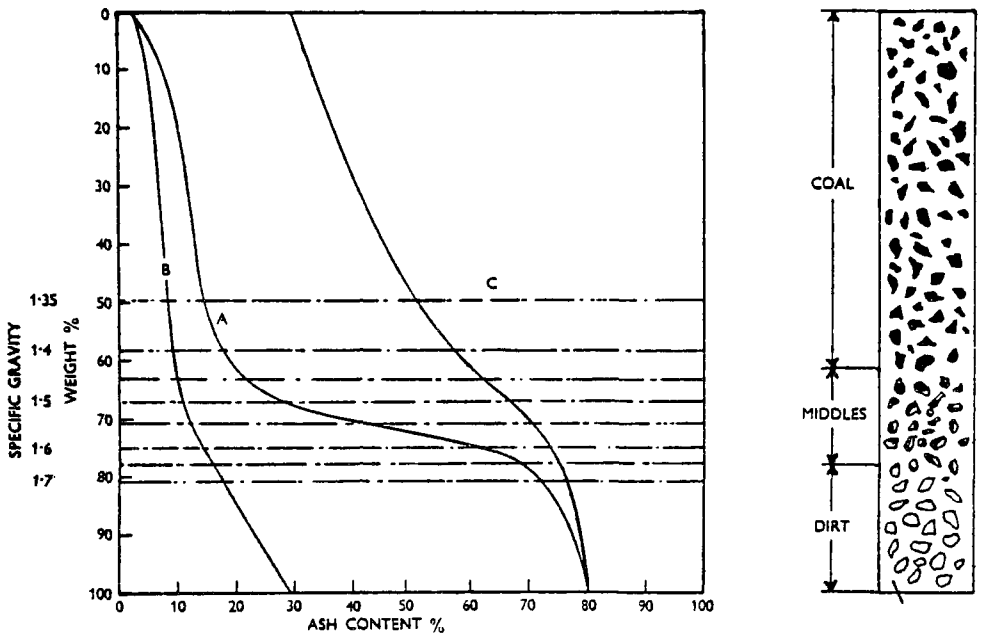

Float-sink analysis

	Weight %	Elementary ash %	Cumulative ash %
Floats at 1·35 sp. gr.	49·5	8·3	8·3
,, 1·40 ,,	8·6	16·2	9·5
,, 1·45 ,,	4·7	19·4	10·2
,, 1·50 ,,	4·2	24·7	11·1
,, 1·55 ,,	4·2	35·5	12·6
,, 1·60 ,,	3·9	52·0	14·6
,, 1·65 ,,	2·6	65·0	16·3
,, 1·70 ,,	3·2	70·4	18·4
Sinks at 1·70 ,,	19·1	76·1	29·4

FIGURE 3. WASHABILITY CURVE OF A "DIFFICULTLY CLEANABLE" COAL

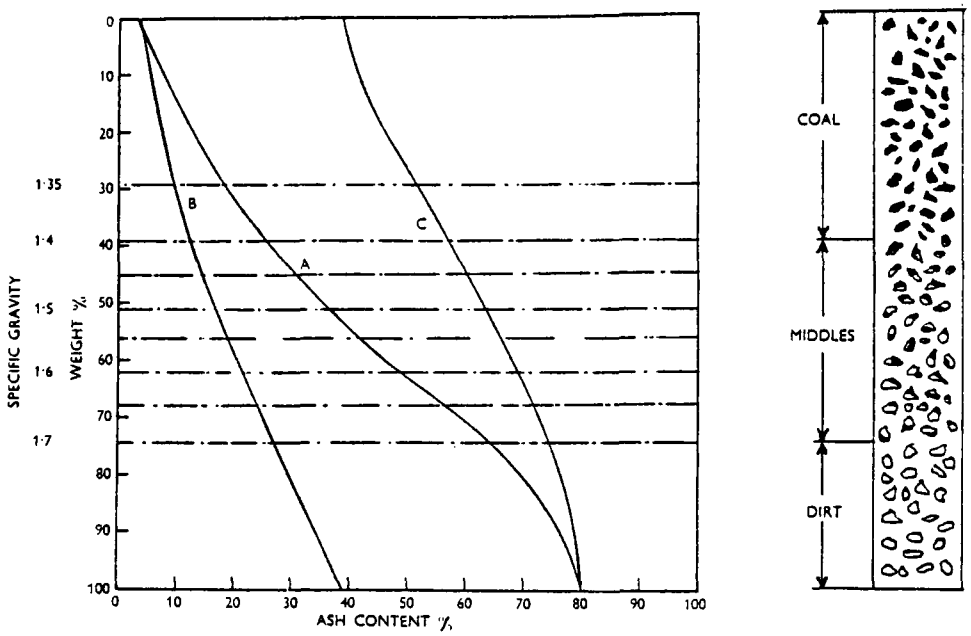

Float-sink analysis

	Weight %	Elementary ash %	Cumulative ash %
Floats at 1·35 sp. gr.	29·7	9·5	9·5
,, 1·40 ,,	9·5	20·7	12·2
,, 1·45 ,,	5·6	28·3	14·2
,, 1·50 ,,	6·2	33·3	16·5
,, 1·55 ,,	5·1	39·0	18·6
,, 1·60 ,,	6·1	45·2	21·2
,, 1·65 ,,	5·7	52·4	23·8
,, 1·70 ,,	6·2	60·3	26·9
Sinks at 1·70 ,,	25·9	72·5	38·7

middlings the coal and ash are so closely combined that this is not practical economically. Alternatively, the middlings can be disposed of as low-grade fuel.

The washability results, for each size fraction, represent the ultimate in quality improvement possible, using the physical process of specific gravity separation. When performance curves ("distribution" curves) for continuous commercial machinery are applied to the washability data for a coal, the practical quality improvement may be predicted for a combination of machine and that particular coal.

EQUIPMENT PERFORMANCE

To characterize the performance of any unit of equipment using the float-sink principle, a distribution, or performance curve is developed. This is a plot of percent distribution of the raw coal to the clean coal product versus the specific gravity of the raw coal slurry. There is a different distribution curve for each size increment of coal. These curves are also called "partition" or "separation" curves. The curve indicates the percentage of material in the feed, having a given specific gravity d, that will be distributed to the clean coal product.

The term "specific gravity of separation" or "d50" is the specific gravity fraction at which the feed is partioned into equal fractions of refuse and clean coal; this is the specific gravity that corresponds to the midpoint (50 percent point) of the ordinate of the distribution curve. This d50 specific gravity is considered a control variable. Actual separations follow a curve which approximates that of Figure 4.

A coal washing device can be adjusted physically so that the value of d50 can be decreased or increased; the distribution curve and the resultant yield and quality then shift. An increase in d50 causes an increased quantity of the "float" fraction and hence an increased yield of this clean coal fraction, but it decreases its quality because more impurities are also floated.

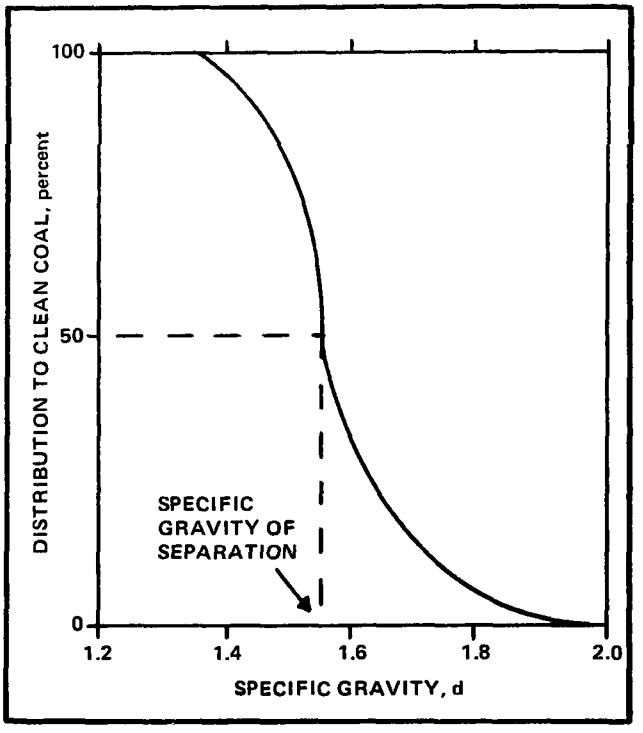

Figure 4. – Distribution curve illustrating specific gravity of separation.

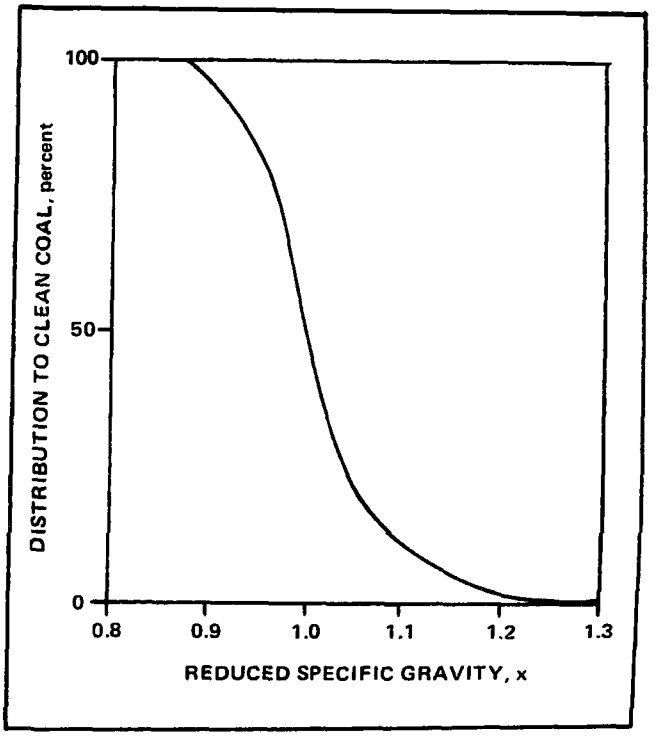

Figure 5. – Generalized distribution curve for data represented in figure 4.

A normalized distribution curve has been developed that it is independent of the d50 specific gravity.[4] The normalized curve is constructed by dividing each point on the distribution curve by the specific gravity of separation (d50) to produce a "generalized distribution curve". The curve thus expresses the performance of a cleaning device (for a given coal particle size increment and type of equipment) in terms of an abstract number rather than actual specific gravities. Figure 5 shows the generalized distribution curve for the data of Figure 4.

This normalization technique thus enables the entire range of distribution data, with respect to specific gravity, to be generated from one single set of normalized data which itself is independent of specific gravity.

Washer equipment performance is predicted by using a unique generalized distribution curve for each of several size increments. The washer's effect on each size and specific gravity fraction is determined by use of each of the generalized distribution curves. Once the weight distributions are established, the BTU, ash, and sulfur content of each product stream can easily be determined. This is possible because the composite yield of clean coal and its quality is the arithmetically weighted sum of the yield and quality of clean coal of each size fraction. The yield and quality of clean coal for each size fraction is obtained from a simple calculation involving the unique distribution curve for that size and the specific gravity analysis of the raw coal for that size.[2]

DEVELOPMENT OF ASH-SULFUR CORRELATIONS FROM WASHABILITY DATA

This work is concerned with evaluation of existing data for correlations between sulfur and ash removal by physical separation. Historically, washability studies have been concerned with ash content, and little attention

was given to sulfur removal. More recently, additional work has been done which includes data on pyritic sulfur and total sulfur. With this information it is possible to identify similarities and differences in the efficiency of removal of pyritic sulfur, total sulfur, and ash by standard tests. The existing data base has been analyzed for correlations of sulfur to ash as functions of specific gravity and size reduction. Also the data were analyzed to study the reduction of ash and sulfur by specific gravity separation after crushing to different particle size. The data base for these calculations is principally that of Bureau of Mines RI 8118.[3] An internal draft report of the Bureau of Mines was also used for data on washability at smaller particle sizes. Both RI 8118 and the detailed washability data concentrate mainly on Eastern and Midwestern coals. Western coal data are less plentiful. Many of the Western coals, however, meet current EPA standards for sulfur emissions without further cleaning.

Analysis of Ash-Sulfur Relationships Based upon a Sample of Washability Data Covering all U.S. Coals

Initially seventy-five coal samples of the 455 coal samples listed in RI 8118 were selected and studied. The basis of this selection was a pyritic sulfur content of at least 0.4 percent to focus on coals potentially best beneficiated by pyrite removal. Representative samples from all such coal beds were selected. The data from these included: state, county, coal bed, size of crushed sample, % pyritic sulfur at 1.40 float, % total sulfur at 1.40 float, % ash at 1.40 float, % ash total, % pyritic sulfur raw coal and % sulfur raw coal. A specific gravity of separation of 1.40 was selected arbitrarily as indicative of the effects of deeply cleaning coal.

Based upon the data compiled, the following ratios were calculated as appropriate for the 3.8 cm x 100 mesh (1 1/2" x 100), 0.95 cm x 100 mesh (3/8" x 100) and 14 mesh by 0 sizes:

- $\frac{\%\ \text{Sulfur}}{\%\ \text{Ash}}$ (at 1.40 float); a clean coal sulfur-ash ratio,
- $\frac{\%\ \text{Sulfur}}{\%\ \text{Ash}}$ (Raw Coal) ; the raw coal sulfur-ash ratio, and
- $\frac{\%\ \text{Pyritic Sulfur at 1.40 float}}{\%\ \text{Pyritic Sulfur (Raw Coal)}}$; the fraction of pyrite remaining.

These calculated ratios and their standard deviations were plotted vs. particle size for each coal sample. The purpose of these calculations was to measure relationships between sulfur and ash removal.

Figures 6 and 7 show the average of the results obtained from these computations. Figure 6 shows that the sulfur to ash ratio increases as a result of crushing to successively smaller top sizes and floating at 1.40 specific gravity. An increase in sulfur to ash ratio occurs at all specific gravities which were analyzed from the laboratory data (1.30 and 1.60 specific gravities). In general, mechanical washing of coal results in an increase in the sulfur to ash ratio of the coal. This implies that ash-forming minerals are removed more progressively than pyrite. However, since the pyritic minerals are also ash-forming constituents, the significance of this conclusion is not clear. For this reason, further computations were made to separate the reduction of pyritic minerals and the reduction of other minerals (e.g., silicates) in these washability experiments. This is discussed later.

In Figure 7 the pyrite remaining in the clean coal is plotted as a function of coal size for the overall data. A clear progressive reduction trend is shown as coal size is reduced from 3.8 cm x 14 mesh (1½" x 14 mesh) top size.

The next step was to analyze the available coal cleaning data region-by-region. To do this, a larger data base was used, essentially the whole data base available from RI 8118. Calculations, as described before, were performed on the coals from each region and the results averaged for each region. Similar trends were seen as those shown for the data in Figures 6 and 7, so a more detailed analysis was attempted to gain insight into the rates at which the various mineral constituents of coal are reduced by size reduction followed by gravity separation.

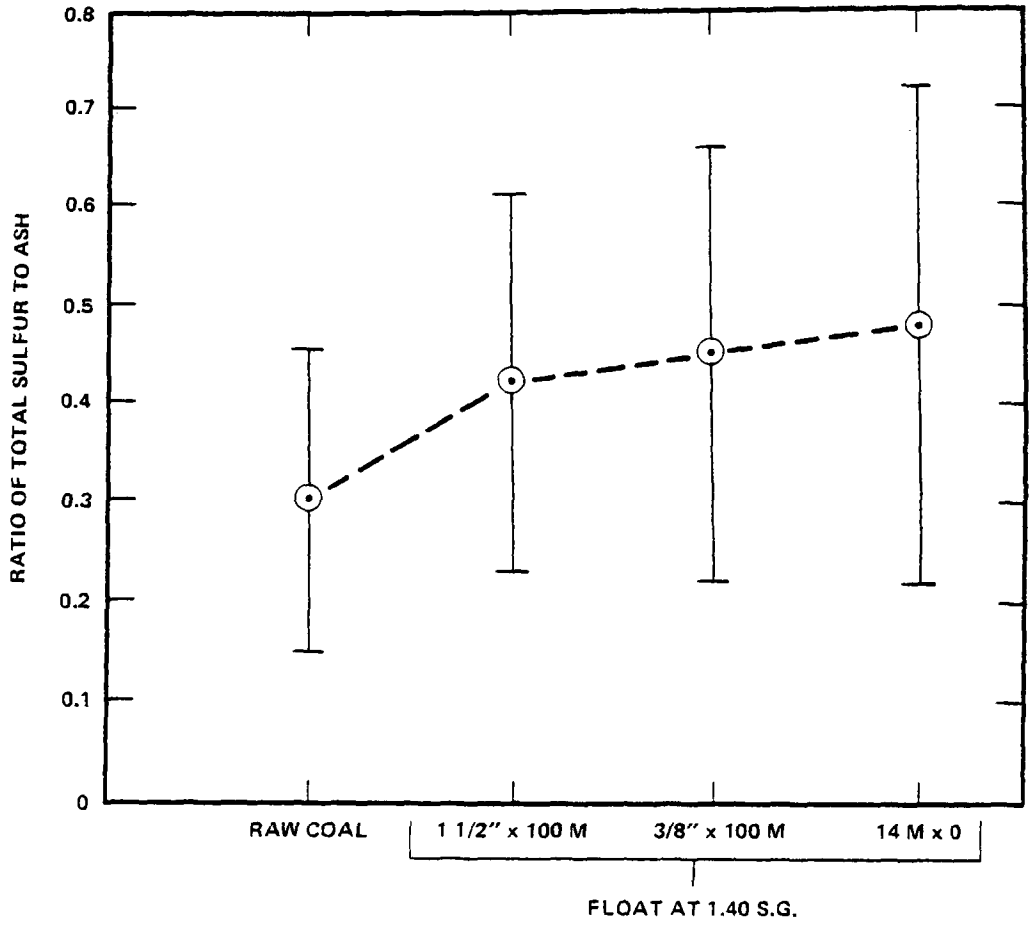

FIGURE 6. CHANGE IN SULFUR/ASH RATIO WITH GRAVITY CLEANING OF 75 SELECTED COAL SAMPLES

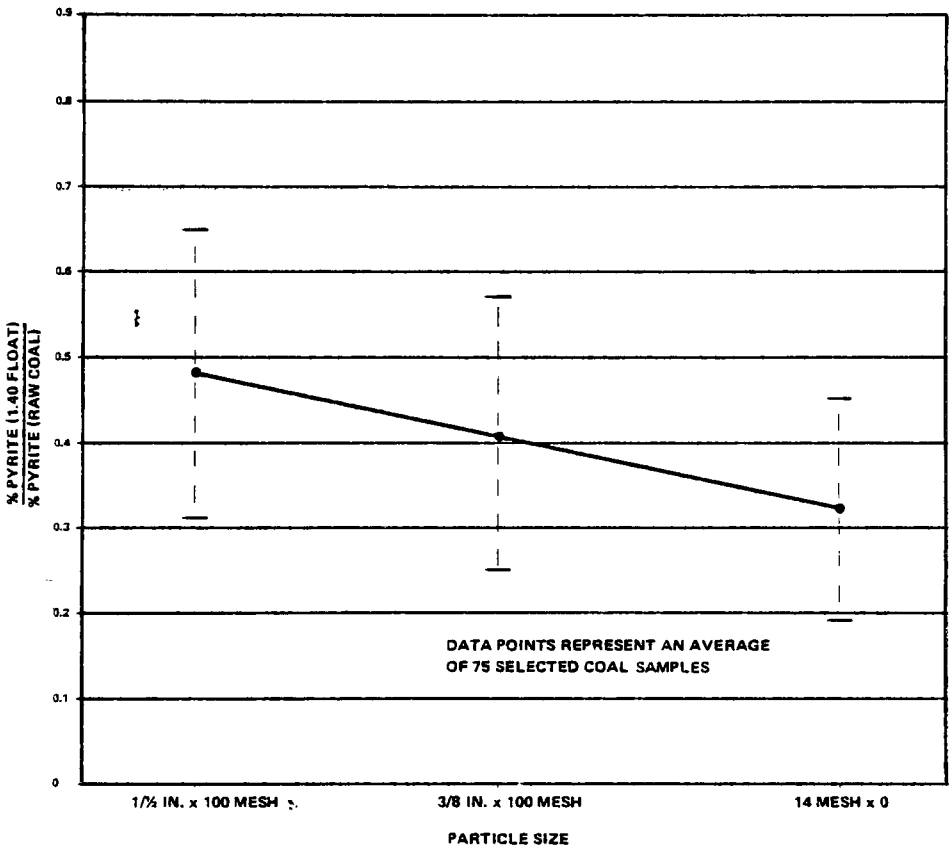

FIGURE 7 FRACTION OF ORIGINAL PYRITE CONTENT IN COAL FLOATING AT 1.40 S.G.

Analysis of Ash-Forming Mineral Reduction on a Regional Basis

A method of separating the differential effects on coal quality of removal of pyrite versus other ash-forming minerals was needed. So the following computations were performed on the data base to obtain values for ash corrected for the amount of iron oxide that would result from the combustion of pyrite:

$$\text{ash attributable to pyrite} = \text{pyrite sulfur content} \times \frac{\text{molecular wt.}Fe_2O_3}{4 \times \text{atomic wt.S}}$$

$$\text{"non-pyritic" ash} = \text{ash content} - \text{pyrite attributed to ash}$$

These values of "non-pyritic" ash have been compared to ash and pyritic sulfur in the 1.40 float fraction of the data base for various coals, coal regions, as well as overall.

The principal conclusion that was derived was that with the possible exception of the Northern Appalachian coals the modified sulfur to ash ratios defined as

$$\frac{\text{pyritic sulfur}}{\text{"non-pyritic" ash}}$$

in the float fractions are relatively constant with top size. However, there are regional or geographic differences. Table 1 lists the averages of this ratio for each of the six regions at 1.40 float and for the raw coal.

A comprehensive analysis of the ratio at specific gravities other than 1.40 was not undertaken. Primary calculations on several coals showed that the trend in sulfur-ash ratios with specific gravity is essentially the same as with particle size. Deeper cleaning of coal by virtue of lower specific gravity or smaller top size produces the same trend in the ratio.

The principal exception to this conclusion is the data from the Northern Appalachian region, where the "non-pyritic" ash content of the clean coal was found to be relatively constant with coal size whereas the pyritic sulfur was markedly reduced with particle size. This is shown in Figure 8 as a logarithmic plot that demonstrates the greater removal of pyrite than ash, and clearly indicates that the pyritic sulfur/non-pyritic ash ratio decreases significantly with particle size for the 1.40 float fractions of the

TABLE 1. RELATION OF PYRITE TO OTHER MINERALS IN COAL SEPARATED AT 1.40 S.G. (FLOAT FRACTION)

Region	Data Base No. of Samples	Coal Top Size	Ratio Of Pyritic Sulfur To Non-Pyritic Ash	Ratio of Total Sulfur To Ash
Northern Appalachian, All levels of Sulfur	326	Raw Coal	0.16	0.20
		3.8 cm (1 1/2")	0.14	0.27
		0.95 cm (3/8")	0.11	0.27
		14 M	0.09	0.27
Northern Appalachian High Sulfur (5% av.pyritic)	32	Raw Coal	0.51	0.38
		3.8 cm (1 1/2")	0.26	0.35
		0.95 cm (3/8")	0.17	0.31
		14 M	0.12	0.31
Southern Appalachian	44	Raw Coal	0.04	0.10
		3.8 cm (1 1/2")	0.05	0.20
		0.95 cm (3/8")	0.05	0.22
		14 M	0.05	0.23
Alabama	10	Raw Coal	0.08	0.14
		3.8 cm (1 1/2")	0.09	0.22
		0.95 cm (3/8")	0.09	0.23
		14 M	0.08	0.24
Eastern Midwest	98	Raw Coal	0.20	0.28
		3.8 cm (1 1/2")	0.17	0.38
		0.95 cm (3/8")	0.17	0.41
		14 M	0.16	0.44
Western Midwest	65	Raw Coal	0.30	0.32
	(55)	3.8 cm (1 1/2")	0.29	0.43
		0.95 cm (3/8")	0.29	0.48
		14 M	0.28	0.51
Western	44	Raw Coal	0.03	0.08
		3.8 cm (1 1/2")	0.02	0.10
		0.95 cm (3/8")	0.02	0.11
		14 M	0.02	0.13

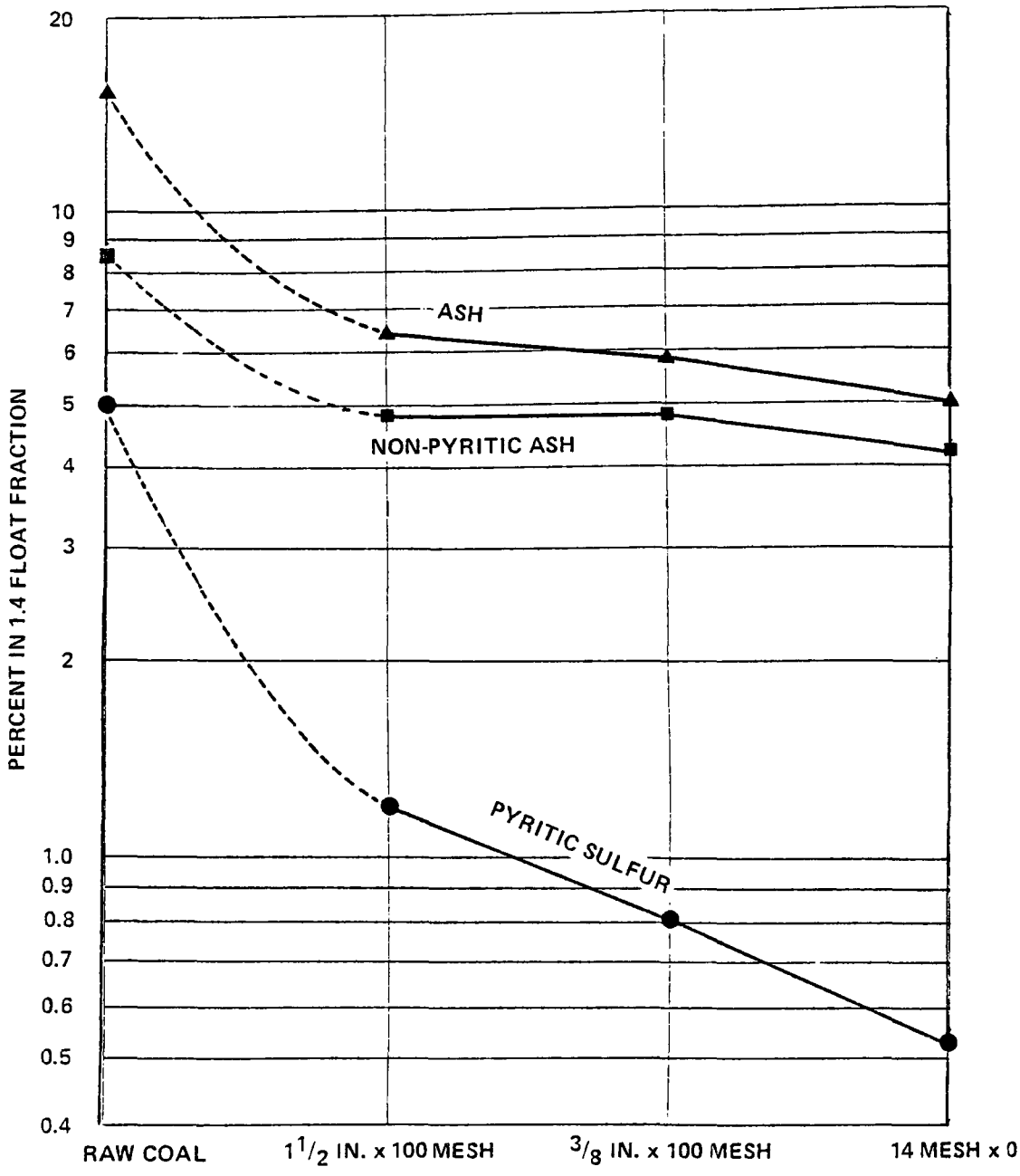

DATA POINTS REPRESENT AVERAGES OF 32 HIGH SULFUR COAL SAMPLES

FIGURE 8 COAL CONSTITUENT DATA FOR NORTHERN APPALACHIAN REGION

high sulfur coals from this region. The difference in this respect with the other regions can be seen in Table 1 which lists the ratio of pyritic sulfur to non-pyritic ash for each coal top size, as well as for the original sample, region by region. Only in the Northern Appalachian region is there a significant change in this ratio from size to size and from the original content. In the coals of this region, pyrite is more effectively released from the coal by grinding to reduce coal top size than other minerals. Computations were made on both the average of all 326 coal samples from this region, and for the 32 selected high sulfur samples. The same general effect was found in both.

Table 1 also shows the total sulfur/ash ratios for these regions. It should be noted that these ratios generally increase with decreasing top size, unlike the pyritic sulfur/non-pyritic ash ratio.

Additional studies of these relationships, particularly the extension of data into finer particle sizes, may provide a basis for classification and selection of area geological, or mineralogical, identification of coal reserves according to potential sulfur cleanability.

Regression Analysis of Sulfur and Ash Relationships

The raw coal data of the Bureau of Mines contained in RI 8118 was analyzed by linear regression for evidence of correlation between total sulfur and ash. The apparent correlations between percentages of total sulfur and ash differed greatly from region-to-region as follows:

region	slope	intercept	correlation coefficient	number of Samples	degree of certainty
N. Appalachian	0.03	2.58	0.11	227	90%
S. Appalachian	-0.01	1.15	-0.08	35	99%
Alabama	0.06	0.74	0.42	10	< 80%
E. Midwest	0.05	3.24	0.21	95	< 90%
W. Midwest	0.19	2.28	0.56	44	99.9%
West	0.00005	0.67	0.001	44	<< 80%
All Data	0.12	1.33	0.08	455	90%

In most cases a moderate degree of correlation between these two coal quality parameters is indicated. However, for the Southern Appalachian and Western regions, the relation between the parameters is even less than indicated by the linear regression correlation coefficients because the slopes of the regression lines are close to zero. This means that total sulfur is virtually independent of ash content in these cases. For the data set as a whole a moderate degree of correlation was found (90% certainty). This is not of sufficient significance to predict sulfur from ash content for individual seams. Western Midwest coals may be exceptions to this generalization because of the high degree of certainty (99.9%) found as well as the high average sulfur content (3.6%) and high slope of the sulfur-ash linear regression.

Linear regression analysis of the whole data set was also carried out for evidence of correlation between total sulfur and non-pyritic ash, since this latter parameter is a measure of mineral content that is not sulfur-containing. A poorer correlation was expected than with the unmodified ash values, and this was found. The degree of certainty of correlation was much less than 80% (approximately 55%) based on a correlation coefficient of 0.04. Correlation between total sulfur and non-pyritic ash was not calculated on a region-by-region basis.

A positve correlation between organic and pyritic sulfur contents with a high degree of certainty (99%) was calculated for the whole data set. Because of this, it was expected and found that there is a low degree of correlation between pyritic sulfur and non-pyritic ash similar to that found for total sulfur-to-non-pyritic ash. The calculated correlation coefficient was 0.04 (less than 60% certainty). Thus it is concluded that pyrite content is essentially unrelated to other mineral content in U.S. coals.

SECTION 2

REFERENCES

1. Leonard, J.W. and D.R. Mitchell (Eds.). Coal Preparation Third Edition, AIME, New York, 1968. pp. 4-23 through 4-24.

2. Jacobsen, P.S. Coal Preparation Computer Simulation of Plant Performance: Mineral Industries Bulletin, Colorado School of Mines, Vol. 21, Jan. 1978, No. 1

3. Cavallaro, J.A., M.T. Johnston and A.W. Deubrouck. "Sulfur Reduction Potential of U.S. Coals: A Revised Report of Investigation," Bureau of Mines RI 8118 or EPA-600/2-76-091, Washington, D.C., April 1976.

4. Gottfried, B.S., and Jacobsen, P.S., 1977. Generalized distribution curve for characterizing the performance of coal cleaning equipment: U.S. Bureau of Mines RI 8238, 21 p.

SECTION 3

CURRENT PROCESS TECHNOLOGY FOR PHYSICAL COAL CLEANING

INTRODUCTION

At least fifty-five percent of the coal mined in the United States is subjected to some physical cleaning process. The degree of cleaning varies widely and the process technologies used range from simple mechanical removal of rock and dirt, to complex coal beneficiation plants for the removal of heavier contaminants and non-combustible minerals in coal. Many cleaning processes are well established, large scale and commercially operating. Some newer cleaning processes for the recovery of coal fines and removal of pyrite are either in the developmental or demonstration stage. The type of cleaning technology and the extent of cleaning depends mostly on the type of coal, the method of mining and the end use of the clean coal. All commercial coal cleaning plants utilize physical cleaning techniques to separate coal from the heavier ash forming minerals. At the present time these plants are primarily designed for the removal of ash not pyrite (mineral sulfur) in coal. Reduction of ash minerals in coal is cost effective since higher heating value results in decreased storage and coal handling requirements and lower transportation cost.

A list of major physical coal cleaning unit operations are given in Table 2. Existing coal cleaning plants use one or more of these operations to prepare the coal for a given market.

In a complete coal preparation facility coal from the mine is crushed and screened to remove oversize material. Secondary breaking or crushing is sometimes necessary to ensure good separation of coal from impurities in the subsequent processing plant. Classifying screens separate coal particles

TABLE 2 SUMMARY OF PHYSICAL COAL CLEANING UNIT OPERATIONS

Unit Operation	Description	Efficiency	Remarks
Jigging	A pulsating fluid stratifies coal particles in increasing density from top to bottom. The cleaned coal is overflowed at the top.	N.A.	Most popular and least expensive coal washer available, but may not effect as accurate a separation as desired. Sizes: 3.4 to 76 mm. (6 mesh to 3 in.)
Tables	Pulverized coal and water are floated over a table shaken with a reciprocating motion. The lighter coal particles are separated to the bottom of the table, while the heavier, larger, impure particles move to the sides.	N.A.	Sizes: .15 to 6.4 mm (100 mesh to 1/4 in.)
Dense Media	Coal is slurried in a medium with a specific gravity close to that at which the separation is to be made. The lighter, purer coal floats to the top and is continuously skimmed off.	N.A.	Advantages: Ability to make sharp separations at any specific gravity within the range normally required; Ability to handle wide range of sizes; Relatively low capital and operating costs when considered in terms of high capacity and small space requirements; Ability to handle fluctuations in feed quantity and quality. Sizes: .59 to 200 mm (28 mesh to 8 in.)

(continued)

TABLE 2. (Continued)

Unit Operation	Description	Efficiency	Remarks
Hydrocyclones	The separating mechanism is described as taking place in the ascending vortex. The high and low specific gravity particles moving upward in this current are subjected to centrifugal forces effecting separation.	N.A.	If maximum pyrite reduction and maximum clean coal yield are to be obtained, supplemental processes such as cyclone classifying, fine mesh screening and froth flotation are necessary (on stream process). Hydrocyclones presently are used in the U.S. to clean flotation - sized coal, but can be used for coal as coarse as 64 x 0 mm. (1/4 x 0 in.)
Humphrey Spiral	Coal-water slurry is fed into a spiral conduit. As it flows downward, stratification of the solids occurs with the heavier particles concentrated in a band along the spiral. An adjustable splitter separates the stream into 2 products—a clean coal and the middlings.	N.A.	Has shown significant ash and sulfur reduction on .42 x 0 mm. (35 x 0 mesh) Middle Kittanning coal.
Launder-type Washer	Raw coal is fed into the high end of a trough with a stream of water. As the stream of coal and water flows down the incline, particles having the highest settling rate settle into the lower strata of the stream. These are the middling or refuse particles. The clean coal particles gravitate into the upper strata before separation.	N.A.	Three types of launders are recognized based upon mode of transport. Sizes: 4.76 to 76 mm. (4 mesh to 3 in.)

(continued)

TABLE 2. (Continued)

Unit Operation	Description	Efficiency	Remarks
Pneumatic	Coal and refuse particles are stratified by means of pulsating air. The layer of refuse formed travels forward into pockets or wells from which it is withdrawn. The upper layer of coal travels over the refuse and is removed at the opposite end.	N.A.	Most acceptable preparation method from the standpoint of delivered heating value cost. Sizes: up to 6.4 mm. (1/4 in.).
Froth Flotation	A coal slurry is mixed with a collector to make certain fractions of the mixture hydrophilic. A frother is added and finely disseminated air bubbles are passed through the mix. Air-adhering particles are floated to the top of the remaining slurry and are then removed as a concentrate.	N.A.	Froth flotation is used to reduce pyrite in English coals; The flotation of coal refuse to obtain salable pyrite is uneconomical in view of todays poor sulfur market; If ethylxanthate is used as the collector, it is absorbed onto coal pyrite in such a manner as to make it ineffective for flotation. Sizes: 1.17 to .044 mm (14 to 325 mesh)
Two stage Flotation for Pyrite	Experimental coal flotation process in which the coal is floated while high ash impurities are rejected. The froth concentrate is then repulped in H_2O, treated with an organic colloid to depress coal. A xanthate collector and alcohol frother are added and then refloated.	Pyritic sulfur reduced 90% with 80% recovery	Frothing agent--methylisobutyl carbinol; pH regulators—NaOH and HCl; Coal Depressant--Aero Depressant 633; Pyrite flotation collector—potassium amylxanthate: In general the ratio of readily floatable coal to total floatable coal increases with an increase in fixed carbon content. Therefore, increased rank yields an increased ratio.

by size and route them to various coal cleaning unit operations which may be either wet, dry or a combination of both.

Current technologies and equipment for physical coal preparation and cleaning are discussed in detail in this section.

BREAKERS AND CRUSHERS

There are two fundamental objectives in crushing coal: (1) to reduce run-of-mine (ROM) coal to sizes suitable for cleaning and (2) to meet the market specifications for specific sizes. Production of fines in the crushing process has traditionally been considered undesirable, therefore, crushers are designed to produce a minimum amount of undersize material.

ROM coal is typically broken into increasingly smaller sizes by staged reduction. Primary breaking is the first stage, where raw coal is reduced to a top size of 100 to 200 mm. (4 to 8 in.). Various sizes may then be screened and sent to washing units or to secondary crushing. Coal that is already smaller than the primary breaker product size is often screened out ahead of the breaker and sent to processing; or it is screened out prior to the primary breaker, routed around the breaker and then combined with the product from the breaker.

Secondary crushers perform the second step in the reduction of coal and reduce the products of primary crushers and washers to a top size of about 45 mm. (1 3/4 in.).

Types of crushers covered here are rotary breakers, single and double roll crushers, hammermills and ring crushers.

Rotary Breakers

The rotary breaker is often called a Bradford breaker. It is essentially a large rotating cylinder powered by an electric motor via a chain and reducer drive. The cylinder diameter ranges from 1.8 to 3.6 meters (5.9 to 11.8 ft.) with a length of 1-1/2 to 2-1/2 times the diameter.

Rotary Breaker Operation--

Coal is introduced through one end of the rotating cylinder and is broken by impacting other coal particles or the bottom of the cylinder. A typical cylinder speed is 12 to 18 revolutions-per-minute. The cylinder walls are heavy screen plates through which the sized material may pass to a conveyor below. Rock, slate, and other materials which resist breakage are retained within the cylinder. Internal lifting shelves and deflectors carry debris along the length of the machine to the discharge end, where a continuously rotating plow scoops out the debris.

Rotary Breaker Performance--

Bradford type breakers are usually quite dependable and require little maintenance because of their design simplicity. Feeds having a high clay content cause the perforations in the cylinder screens to become clogged causing equipment shutdown.

Capacities of rotary breakers range up to 1,800 kkg (2,000 tons) per hour for the larger units. The data in the table below cover sizes and capacities for reducing ROM coal to a 160 x 180 mm. (6.3 x 7.1 in.) product. Data presented below are for Pennsylvania Crusher Corp. Rotary breakers.

SIZES AND CAPACITIES OF ROTARY BREAKERS

Size Diam,x Length,Ft*	Casing Appox. Wt,Lbs*	Bearing Load with Coal,Lbs*		Maximum Weight, Piece,Lbs*	Motor, Appox. Hp*	Capacity Appox. Tph*	Type of Coal
		Feed End	Disc'g End				
6 x 8	7,300	13,000	11,450	32,150	10	75- 150	Soft
7 x 14	9,100	17,300	15,600	37,500	15- 20	125- 250	Soft
9 x 17	14,000	35,000	27,400	42,160	40- 50	275- 450	Medium
10½x 19	22,300	51,625	48,625	15,050	60- 75	500- 750	Medium
12 x 22	32,700	95,500	77,500	17,400	100-150	1,000-1,500	Hard

* Conversion factors from English to metric units are available in Table 16.

A Variation: The Rotary Breaker Hammermill

In the trunnion mounted breakers, the addition of a hammermill rotor in the discharge end makes the unit more effective in handling harder coals and can add 20 to 25 percent production capacity to the unit.

Single-Roll Crushers

The single-roll crusher is one of the oldest types of comminution equipment. It consists primarily of a heavy frame on which are mounted a toothed crushing roll and a stationary breaker plate.

Single-Roll Crusher Operation—

The single crushing roll usually has long teeth equally spaced around and along the roll with short teeth inserted in the spaces between the long teeth. Coal is caught between the revolving roll and the breaker plate where the long teeth act as feeders and do the initial breaking of large lumps and the short teeth accomplish the final size reduction. Variation of tooth design helps to tailor the crusher to a particular feed. Product size adjustment is made by changing the clearance between crushing roll and breaker plate.

Single-Roll Crusher Performance--

A typical single-roll crusher is capable of handling ROM coal, reducing it to 40 x 0 mm. (1-1/2 x 0 in.) without stalling. Capacities of some single roll crushers are shown on the next page.

Double-Roll Crusher Operation--

Most of the crushing action of the double-roll crusher is by impact of roll-teeth against coal, rather than by compression between the rolls. The fact that compression plays a secondary role is evidenced by the production of a relatively small amount of fines.

Adjustment of the spacing between the rolls is an important factor. Some units are adjustable by means of a traveling bevel gear and bearing box while others utilize a special gear train or chain drive, driving both rolls to allow adjustment during operation. One company has developed a special gear train which allows adjustment of up to 28 cm. (11 in.) while the crusher is in operation. The system uses pinion yokes which change their angle as the movable roll position is changed, thus keeping the pinion gears in mesh with the gears.

CAPACITIES OF SINGLE-ROLL CRUSHERS

Tons* per Hour

Roll Size Diam.x Width, In.*	Max. Size of Feed, In.*	Product Size, In.*								
		1	1½	2½	3 3/4	5	6	7¼	8½	9 3/4
		Hard Bituminous Coal								
18 x 18	8	16	27	65	85	110				
24 x 36	14	55	85	160	190	220	260			
30 x 45	20	155	170	300	330	350	425	500		
36 x 45	22	150	230	380	450	550	625	720	850	1000
Hp*per Ton* Crushed		7/8	5/8	1/3	1/3	1/6	1/6	1/6	1/9	1/9
		Medium Hard Bituminous Coal								
18 x 18	10	17	32	75	100	140				
24 x 36	16	55	105	190	230	275	325			
30 x 45	22	120	200	350	400	425	500	575		
36 x 54	24	160	275	420	500	600	720	800	1000	1200
Hp*per Ton* Crushed		3/4	1/2	2/9	2/9	1/9	1/9	1/9	1/12	1/12
		Soft Bituminous Coal								
18 x 18	12	22	40	85	115	155				
24 x 36	18	75	130	200	250	300	350			
30 x 45	24	145	250	380	450	480	550	625		
36 x 54	30	195	335	460	550	700	850	950	1100	1300
Hp*per Ton* Crushed		1/2	1/3	1/6	1/6	1/12	1/12	1/12	1/16	1/16

*Conversion factors from English to metric units are available in Table 16.

Double-Roll Crusher Performance—

In time, normal wear of the roll teeth will reduce the double-roll crushers capacity and increase its horsepower requirement. The capacity of a unit depends on the roll speed, diameter and length of the rolls, and their set. Capacities of typical double-roll crushers are given below.

CAPACITIES OF DOUBLE-ROLL CRUSHERS

Tons* per Hour

Roll Size Diam.x Width, In.*	Max.Size of Feed, In.*	Speed of Rolls RPM	Product Size, In.* 1¼	2	3	4	5	6	7¼	Min. Motor Hp*
		Hard Bituminous Coal								
18 x 15	4-8	150	20	30	35	50	60			5
20 x 18	4-10	150	30	40	50	70	85			7½
24 x 36	6-16	130	65	90	115	170	200	270	300	15
30 x 48	8-20	115	110	150	190	250	330	400	450	25
Hp*per Ton* Crushed			1/2	1/2	1/3	1/3	1/6	1/6	1/6	
		Medium Hard Bituminous Coal								
18 x 15	4-10	150	25	35	45	65	70			5
20 x 18	4-14	150	40	50	65	85	100			7½
24 x 36	6-18	130	80	115	140	200	260	290	350	15
30 x 48	8-24	115	140	185	235	300	390	460	575	25
Hp*per Ton* Crushed			1/3	1/3	1/4	1/4	1/8	1/8	1/8	
		Soft Bituminous Coal								
18 x 15	4-12	150	30	40	50	70	90			5
20 x 18	4-16	150	50	60	80	100	130			7½
24 x 36	6-20	130	100	140	180	220	290	350	450	15
30 x 48	8-24	115	175	215	280	375	470	550	700	25
Hp*per Ton* Crushed			1/4	1/4	1/6	1/6	1/10	1/10	1/10	

*Conversion factors from English to metric units are available in Table 16.

Hammermills

Hammermills consist of a heavy frame supporting a rotor to which hammers are attached. On one side of the rotor is the feed opening; on the other side are grate bars whose function is to fix top product size. A metal trap is usually included to prevent damage to the hammers or cage bars by "uncrushable" material. A sectional view of a representative hammermill is shown in Figure 9.

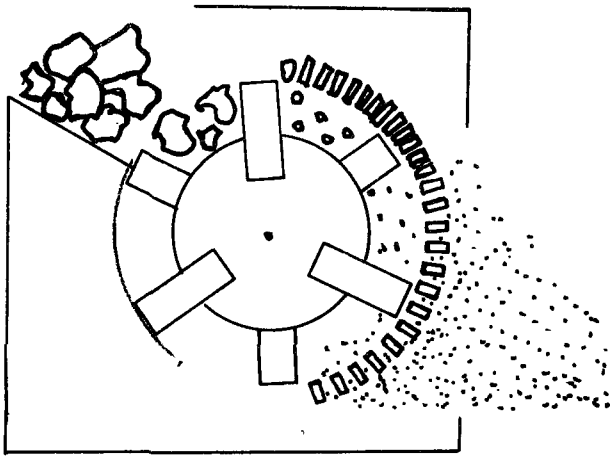

FIGURE 9 : SECTIONAL VIEW OF HAMMERMILL

Hammermill Operation--

In all hammermills, the material is broken by impact from hammers striking the material and reducing it until it is fine enough to pass through openings in grates (cage bars) or screen plates. Generally speaking, heavy hammers operated at a slower speed are best for coarse crushing operations while a greater number of lighter hammers operated at a higher speed are best for crushing to fine sizes.

Some manufacturers offer reversible hammermills in which the direction of rotation may be reversed to increase hammer life. Reversible mills have twin breaker blocks attached symmetrically around the top half of the rotor and twin cages attached symetrically around the bottom half.

The cage position may be adjusted to compensate for hammer wear. Cage bar spacing may be varied for adjustment of product size.

Hammermill Performance--

Hammers, breaker plates, and grate bars must be in good condition to maintain proper product size and efficient operation.

Capacities for one

SIZES AND CAPACITIES OF HAMMERMILLS

Diam.x Length,In.*	Approx. Hp*	Approx. Weight, Lbs*	Feed Opening, In.*	Speed RPM	Floor Space*	Capacity, Tph* - ROM Coal 1/8"* Bar Opening	1"* Bar Opening
20 x 12	12- 20	2,200	11 x 11	1,500-1,800	2'8" x 4'6"	2-3	6- 8
24 x 20	30- 40	4,200	13 x 20	1,400-1,600	3'2" x 5'10"	6-8	18-20
36 x 36	75-100	11,800	18 x 36	900-1,200	4'4" x 8'7"	20-25	75-90
36 x 60	150-175	17,800	18 x 60	900-1,200	4'4" x12'4"	45-50	140-160
42 x 66	175-250	36,000	22 x 66	700-1,000	4'10"x13'0"	75-85	175-220

* Conversion factors from English to metric are available in Table 16.

Ring Crushers

Ring Crushers are similar to hammermills,but use circular rings in place of swing hammers; both have breaker plates, rotor assemblies and cage assemblies.

Figure 10 is a sectional view of a typical ring crusher.

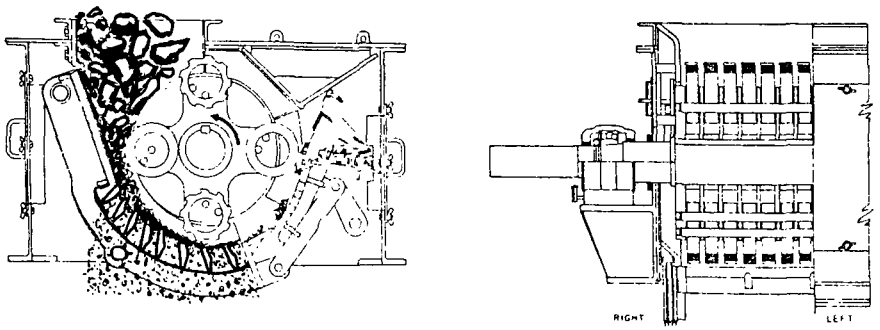

FIGURE 10. A TYPICAL RING CRUSHER

Ring Crusher Operation—

Rings may be of toothed or smooth design and are often used in combination. Much of the breaking action is by impact; compression crushing accounts for the remainder. A mechanism for cage position adjustment provides a method to compensate for ring wear. Cage bar spacing may be altered for adjustment of product size.

Ring Crusher Performance—

As with the hammermill, the various parts which are subject to wear must be kept in good condition or replaced when necessary to ensure constant product size and optimum machine efficiency.

Capacities and related data for representative ring crushers are given below.

CAPACITIES OF RING CRUSHERS

Diameter Hammer Circle In. *	Maximum Feed Size In. *	Approx. Hp *	Approx. Capacity Tph *
24	10	20	40
30	16	100-125	175- 225
32	18	200-225	350- 400
38	22	250-275	500- 550
54	28	500-600	1,050 - 1,200

* Conversion factors from English to metric units are available in Table 16.

Capacities based on handling run of mine bituminous coal of average hardness and moisture content for reduction to a nominal 3/4 in. and under product.

SCREENS

Approximately half of the 1975's coal production of 584 million metric tons (644 million tons) has passed over screens within a preparation plant; and the remainder of that production has, at some point, gone over screens for scalping or sizing.

The screens used in coal preparation circuits fall into six major categories:

- Scalping screen - for separating refuse and fines prior to size reduction;
- Raw coal sizing screen - for separating the raw coal into coarse and fine size for further processing;
- Pre-wet screen - to remove fines prior to the mechanical cleaning;
- Heavy Media Recovery Screens - for recovery and reuse of Magnetite;
- Desliming Screens - to remove extreme fines; and
- Dewatering Screens - to remove water.

The number, style and types of screens will vary by plant depending on:

- nature of the coal deposit;
- method of coal mining;
- method of cleaning;
- tonnage;
- crushing requirements;
- desired product; and
- availability of water.

Scalping

The run-of-mine (ROM) scalping screen can play an important role in a plant by reducing the size and number of crushers required. Since efficiency is critical to crusher sizing, the vibrating scalper is normally preferred over the stationary bar screen.

Normally, minus 610 mm. (24 in.) ROM coal, which can include rock, slate and other foreign materials, is brought from the mine by trucks or conveyors and fed to the scalper, with oversize going to the crusher and fines by-passing the crusher.

The method of mining affects the material size analysis of the feed to the ROM scalper, thus affecting the screen size. The screen size is also affected by the percentage of moisture in the ROM coal. Moisture can create a balling situation, with fines sticking to large lumps.

The ROM scalper is usually a heavy-duty, mechanically vibrated, single deck, inclined-type, with circular stroke, and with a feed box having liners to receive initial material impact. The feed box on a screen can be important in reducing decking replacement costs, and also help spread material over the deck for more efficient operation.

The decking must be capable of handling impact and abrasion, so scalper decking is generally composed of skid bars, tapered and self-relieving, made of manganese steel, abrasion resistant (AR) steel or polyurethane. A perforated plate is also widely used with skid bars.

Deck openings are usually from 15 to 30 cm (6 to 12 in.) depending on size analysis of ROM coal. The coal passing through the scalper bypasses the crusher, oversize going to the size-reduction machine and both materials combining for conveyance to the raw coal screen or to storage or loadout if no further sizing or coal processing is required.

Raw-Coal Sizing

In some plants, due to the method of mining, a higher percentage of coal reports as fines, the top size usually being less than approximately 250 mm. (10 in.). The ROM scalper is not required in this case, so the first station will be the raw-coal sizing screen.

The raw-coal sizing screen receives combined feed from the primary crusher and/or the ROM scalper screen, usually minus 250 mm. (10 in.) coal, and separates the raw coal into coarse and fine sizing for further processing. It is normally a heavy-duty, mechanically vibrated, double-deck, inclined type, circular stroke machine with a lined feed box to absorb impact.

The top deck is usually a steel perforated plate. Recent legislation on noise emissions strongly suggests that polyurethane and rubber be considered for its noise-deadening effect. The top deck size has approximately 38 mm. (1/2 in.) openings.

The bottom deck is most commonly of wire cloth with approximately 8 mm. (5/16 in.) openings; but polyurethane and rubber are coming into use to cut noise.

The plus 8 mm. (5/16 in.) coarse material is directed to the coarse coal cleaning plant, where the first station is the pre-wet screen. The minus 8 mm. (5/16 in.) material goes to the fine cleaning plant and the desliming screen. In plants where no further cleaning is needed, the coal goes to the final sizing screen, loadout or storage.

Pre-Wet Screen

The pre-wet screen employs a water spray to remove fines before the coal is sent to the mechanical cleaning process. This screen receives a feed of coarse coal from the raw coal screen. Usually, 10 to 20 liters/minute (3 to 5 gpm) per ton per hour (of coal) spray water is directed onto the coal. Fines are washed through the screen and directed to the fine coal desliming screen.

Normally the pre-wet screen is a heavy-duty, mechanically vibrated, double-deck, horizontal machine with a straight line stroke at 45°, and a lined feed box with water spray bars directed to both decks. Other accessories required are sideplate drip angles to prevent water spillage outside the through hopper.

The purpose of a double-deck is to reduce the depth-of-bed on the screen to accentuate feed stratification and thus assist the fines in being washed through the bottom deck. Top decking is of wire cloth or polyurethane rubber with approximately 25 mm. (1 in.) openings. The bottom deck is usually T-304 stainless steel profile decking or polyurethane slotted with a 1 mm. clear opening.

The coarse raw coal oversize is now directed to the cleaning device which is either a jig or heavy-media bath. The fines washed through are directed to the fine cleaning plant. (It should be noted that in some plants the raw coal sizing and pre-wet screens can be combined into one common, inclined-type machine).

Heavy Media Recovery Screens

The purpose of the heavy-media recovery screens is to receive the coal, middlings, and refuse from the heavy-media bath and, with water sprays, wash the magnetite off larger particles and lumps for recovery and

reuse. (Magnetite is expensive and recovery is critical to plant operating costs.)

The heavy-media, drain-and-rinse screen is usually a heavy-duty, mechanically vibrated, double decked horizontal-type machine with straight line stroke at 45°, and sprays directed to both decks. A cross-flow screen or sieve bend installed ahead of the screen is commonly used in place of a feed box. The sieve bend can reduce the required screen size up to 20 percent.

The top deck is of wire cloth, polyurethane or rubber, with an opening approximating 25 mm. (1 in.). The bottom deck is usually T-304 stainless steel or polyurethane slotted to effect a 1 mm. (1/32 in.) separation that will pass the magnetite, but retain the coal. Coarse clean coal, coarse middlings or coarse refuse directed to dewatering screens.

Desliming Screens

The first station in a fine-coal cleaning plant is the desliming screen, which is normally preceded by a stationary sieve bend or cross-flow screen. The desliming screen receives a feed of minum 8 mm. (5/16 in.) raw coal from the pre-wet screen.

The desliming screen is usually a heavy-duty, mechanically vibrated, single-deck machine with a straight line stroke at 45°. The screen's depth of bed is held to a minimum so that fines can be easily washed through.

Dewatering Screens

Washed coal from wet cleaning operations contains large volumes of water which must be removed from the coal to meet market requirements.

Dewatering screen selections are based on average particle size and the bed depth of the coal. A detailed discussion of dewatering screens is given in Section 5 of this report.

Tables 3 and 4 summarize screen usage.

JIGS

Jigs rely on the process of particle stratification due to the range of specific gravities represented by the coal and impurities. The stratification results from repeated expansion and compaction of a bed of particles

TABLE 3

VIBRATING SCREEN EQUIPMENT FOR COAL PREPARATION SERVICE

Coarse Coal Cleaning Plant

Type	Number of Decks	Installation Angle	Aperture(s)	Screen Section Type
ROM Scalper	Single	17-25°	15.2 cm	Manganese Skid Bars AR Perforated Plate with Skid Bars
Raw Coal Sizing Screen	Double	17-25°	3.8 cm	AR Steel Peforated Plate Polyurethane Rubber
			8 mm	Polyurethane Wire 304 Stainless Profile Rubber
Prewet Screen	Double	Horizontal	3.8 cm	Wire Polyurethane Rubber
			1 mm	Stainless Steel Profile Deck Polyurethane
Heavy Media Drain and Rinse Screen	Double	Horizontal	2.5 cm	Wire Polyurethane Rubber
			1 mm	304 Stainless Steel Profile Decks Polyurethane
Dewatering Screen	Single	Horizontal	1 mm	304 Stainless Steel Profile Deck Polyurethane

TABLE 4

SCREEN EQUIPMENT FOR COAL PREPARATION SERVICE

Fine Coal Cleaning Plant

Type	Number of Decks	Installation Angle	Aperture	Screen Section Type
Deslime Screen	Single	Horizontal	1/2 mm	304 Stainless Steel Profile Deck Polyurethane
Heavy Media Drain and Rinse Screen	Single	Horizontal	1/2 mm	304 Stainless Steel Profile Deck Polyurethane
Dewatering Screen	Single	Horizontal	1/2 mm	304 Stainless Steel Profile Deck Polyurethane

by a pulsating fluid, usually water. In the pulsation stroke, water moves upward through the particle bed and causes it to expand. Water moving downward through the bed causes compaction (suction stroke). During the pulsation stroke the particles move upward in relation to their specific gravities, i.e., fragments of lighter specific gravity material move a greater distance. During the suction stroke the lighter specific gravity materials descend at a rate slower than their heavier counterparts. After such cycles, particle stratification within the bed results.

Aside from the mechanical system designed to produce and control the pulsation-suction cycles, two other systems comprise the typical jig. They are:

- a system to convey the unsorted material into the machine; and
- a system to separate the stratified bed into product and refuse and to remove each of these fractions.

Differing methods for producing the pulsation-suction cycles distinguish the three main types of jigs:

- plunger-type - water movement is caused by the reciprocating motions of a plunger in a compartment of the jig;
- basket-type - in which the box containing the bed is moved up and down in standing water; and
- air pulsated-type--in which the tank is constructed in the shape of a "U". Water reciprocation is caused by applying and releasing compressed air to the closed end of the "U".

Baum Jigs

By far the most popular of the three jig types in the coal industry is the air pulsated-type, called Baum Jigs. A typical Baum Jig is shown in Figure 11. Since their development in Germany more than 75 years ago and their subsequent introduction into the United States in 1928, the use of Baum Jigs has risen to the point where they now have 75 percent of the coal-jig market.

Baum Jig Operation—

The Baum jig is essentially a "U" shaped box having one end of the "U" sealed. On the other side, near the top, are perforated screen plates, whose function is to support the bed of coal. The screen plates have 6.4 mm. (1/4 in.) holes, although openings up to 13.8 mm. (1-1/4 in.) have been used. The area below the screen in the lower part of the "U" is called the "hutch compartment."

Most Baum jigs have a screw conveyor situated at the bottom of the hutch compartment to move fine refuse, which has fallen through the screen plates, to a bucket elevator.

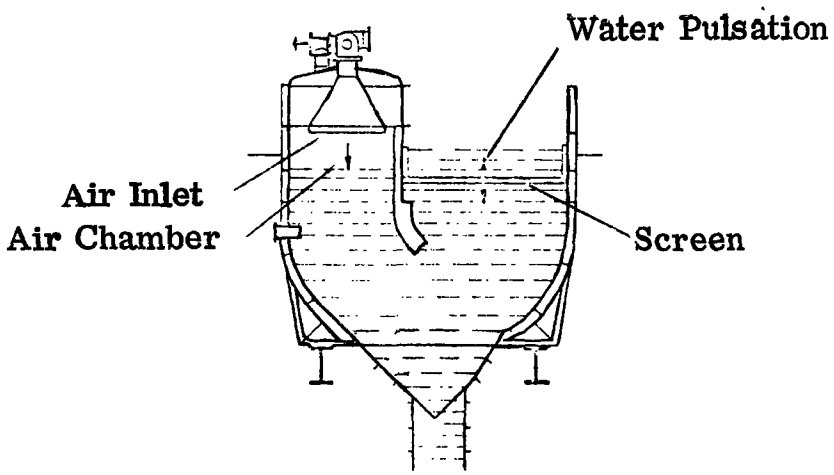

FIGURE 11. BAUM JIG CROSS SECTION.

On the side opposite the screen plates is a sealed compartment where the water pulsations are initiated. This chamber is fitted with intake and exhaust valves for the admission and exit of compressed air. When the intake valve opens the water is forced upward through the screen plate and the bed expands. With the exhaust valve in the open position, the water returns to its original level. The principal reason for the remarkable success of the Baum jigs over the plunger-type jigs is the control capability of the "back suction", which is unique to the Baum machine. The expanded bed returns to its compacted state under the influence of gravity; the rate of particle descent being controlled by varying the release rate of air from the pulsa-

tion chamber. Thus, optimum conditions are obtained much more readily than with the plunger-type.

The jig box is divided horizontally into compartments by fixed vertical weirs designed to control the flow of the bed laterally across the machine. Each compartment is actually a jig within a jig; as each one has the means for discharge of refuse and exit of clean coal, either to the next compartment or to a conveyor.

To separate the strata into refuse and product, the bed is divided along a horizontal plane, by refuse ejectors. The refuse is sent to a bucket elevator either via the final refuse ejector or via the screw conveyor mentioned earlier.

Finally, Baum jigs have a mechanism for controlling the relative amount of refuse withdrawn, therefore controlling the quality of the cleaned coal. This is necessary because of the lack of a sharp interface between refuse and product; rather, there is a gradational contact. The mechanism consists of a float immersed in the coal-water bed near each point of refuse removal. The float acts as a hydrometer, thus determining the amount of refuse at that level. The float height level varies with specific gravity of the bed at the set location and actuates mechanical devices to change the rate of refuse withdrawal.

Baum Jig Performance--

The jigging process works well provided that:

- The feed is not closely sized;
- The jig is not loaded so heavily that particle interaction prevents stratification; and
- Ultra-fine coal or mineral particles do not greatly effect the natural viscosity of the water and hence the upward and downward movements of particles within the bed.

Efficiency of a jig is often depicted by a distribution curve as described in Section 2 of this report. A generalized distribution curve for a typical Baum-type jig is shown in Figure 12.

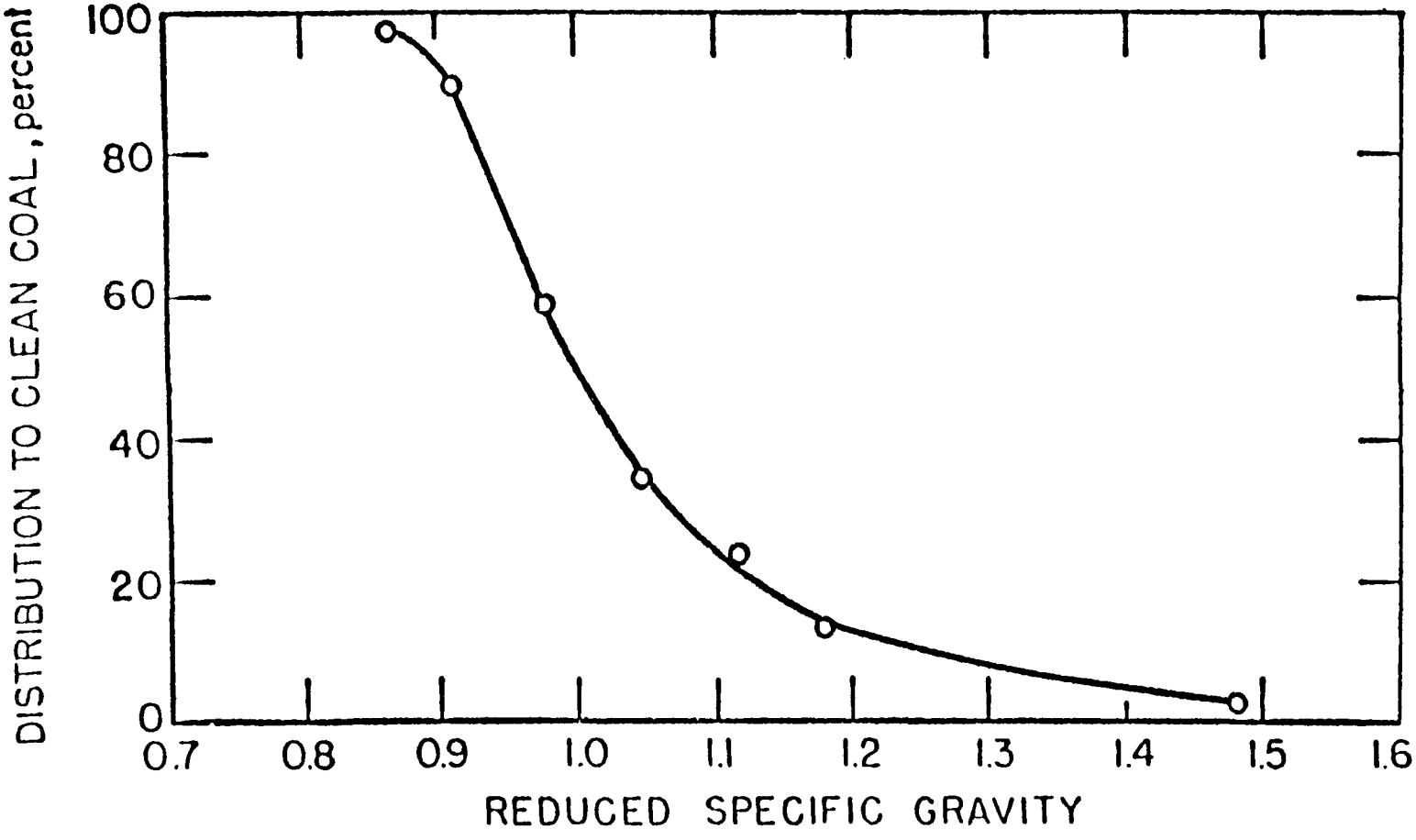

FIGURE 12 GENERALIZED DISTRIBUTION CURVE FOR BAUM JIG TREATING A 15 cm (6 in.) BY 48 - MESH COMPOSITE FEED

Recent technology--Perhaps the most significant advancement in recent jigging technology is the joint development of the Batac jig by the Germans and Japanese (see Figure 13) for fine coal preparation. This device produces water pulsations directly beneath a feldspar bed screen in multiple, independently controlled chambers, which are uniformly distributed throughout the jib. The jib utilizes electronically controlled, flat-disc design valves for sharp cutoff of input and exhaust. These valves can be adjusted for speed and length of stroke, thereby permitting the specific gravity of separation to be varied from 1.60 to 2.00. Bed widths are available up to 5 meters (16 feet). Capacities for processing fine coal, 13.7 mm. (1/2 in.) range up to 360 kkg (400 tons) per hour and for processing coarse coal, 127 x 10 mm. (5 x 3/8 in.), up to 720 kkg (800 tons) per hour.

Advantages of the Batac Jig over conventional jigs are claimed to be:

- reduced building-space requirement;
- lower equipment weight; and
- cleaning ability extending over a wider range of particle sizes.

WET CONCENTRATING TABLES

Today's wet concentrating tables are an outgrowth of an evolutionary process that began years ago. The introduction of suspended, multiple-deck tables in the late 1950's and early 1960's is the most recent development of real significance in the manufacture of concentrating tables. To a large extent, this development has eliminated two of the primary disadvantages of concentrating tables, the need for large amounts of floor space and the need for massive concrete foundations to absorb the impact of the drive mechanisms.

Concentrating tables flow a slurry of pulverized coal and water over an inclined riffled deck which shakes rapidly effecting a separation of the particles--by size and specific gravity.

Table Operation

Because of the reciprocating action of the table and the transverse flow of water, the water and coal pulp fans out upon contacting the table

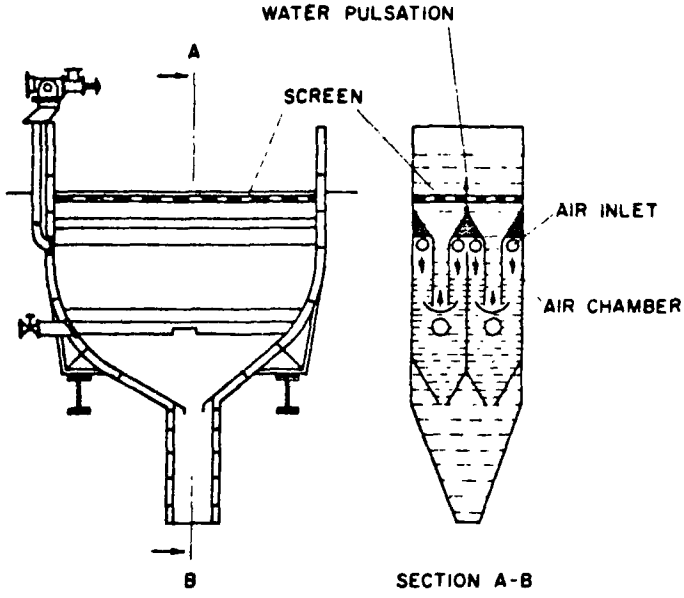

FIGURE 13. BATAC JIG CROSS SECTION.

surface. The upward slope of the table toward the refuse end, and the retaining effect of the pool riffles cause the slurry to form a pool near the feedbox. In the pool, the bed of material is several particles deep and substantially above the standard riffles; this area becomes the zone of primary stratification. In this zone the shaking motion of the deck, combined with the cross current of water, stratifies the particles by density, similar to the action of a jig.

The particles that make up the feed become arranged so that the coarsest and heaviest particles are at the bottom and the finest and lightest particles are at the top. The heaviest particles are carried by the table movement towards the refuse end at a faster rate. The lighter pieces ride on the top layer of particles and flow down the slope of the deck as a result of the cross flow of wash water which is at right angles to

the shaking movement of the table. Since stratification and separation of particles are not complete as a result of any one riffle, a series of riffles is used, repeating the cycle of stratification and hindered settling from riffle to riffle, thus obtaining purer refuse products as the particles fan out and progress forward and downward over the table. Conversely, the purer, cleaner coal is discharged at the drive end of the table.

As shown in Figure 14, successive samples collected along the side and end of the table, starting at the head-motion end, show a steady increase in ash content and a steady decrease in the average particle size for each individual specific-gravity fraction.

Concentrating tables are provided with a number of adjustments which should be used to obtain the best possible operation. Among these are:

- speed;
- length of stroke;
- feed rate;
- amount and distribution of wash water;
- water-to-solids ratio of the feed pulp;
- uniformity of feed size;
- riffle design;
- side tilt; and
- end elevation.

The oscillation of the deck usually is 260 to 290 strokes per minute, depending on the characteristics of raw coal and the feed rate. If there are high percentages of refuse in the raw coal or if the feed rate is high, an increase in the frequency is required.

Closely related to the frequency is the amplitude, or length of the stroke. The amplitude and frequency are varied to maintain the mobility of the bed necessary for stratification while retaining the coal on the deck long enough for proper separation. To move large quantities of refuse material along the deck, an amplitude as long as 32 mm. (1 1/4 in.) may be required. The amplitude and frequency of the stroke are decreased as the amount of near-gravity material in the feed increases. Generally, a fine feed will require a higher speed and shorter stroke than a coarse feed.

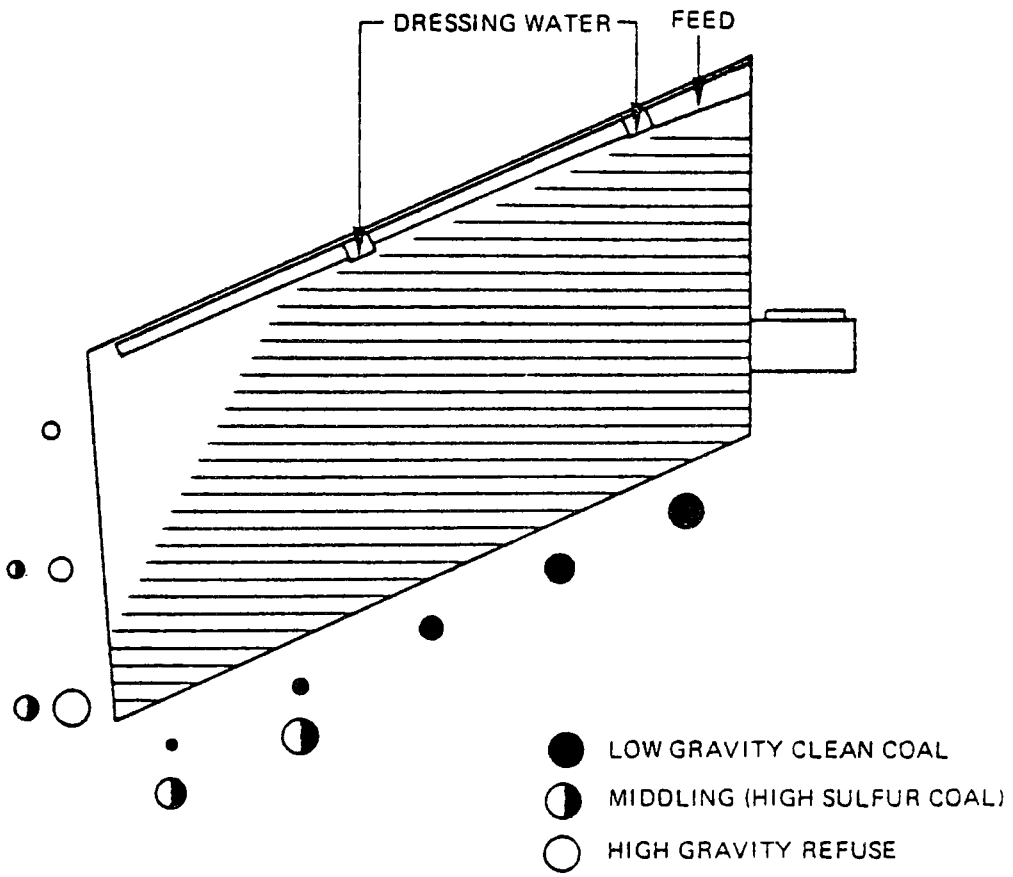

FIGURE 14 THE DISTRIBUTION OF TABLE PRODUCTS BY PARTICLE SIZE SPECIFIC GRAVITY

The cross slope and amount and distribution of wash water to the table can be changed easily and quickly to compensate for minor variations in feed rate and composition.

Perhaps the most important of all table adjustments is the end elevation or the amount of upward inclination of the deck measured along the line of motion from the feed end to the discharge end. By creating a moderate slope that the high specific gravity particles will climb more readily than the low specific gravity minerals, separation is greatly improved.

Table Performance

Table capacity varies with the size consist, the percentage of reject contained in the feed and the washability of the table feed. Coarser feeds are processed at higher rates than are finer feeds and feed rates will be limited by the percentage of rejects above 25 percent. The majority of table installations utilized in bituminous coal are fed 9.5 x 0 mm. (3/8 x 0 in.), or 6.4 x 0 mm. (1/4 x 0 in.) or deslimed fractions of a larger top size. The capacity per double-deck table is 23 kkg/h (25 tph) feed; i.e., 11.2 kkg/h (12 1/2 tph) per deck. For 19.1 or 12.7 mm. (3/4 or 1/2 in.) top size, commonly handled when cleaning steam fuels, a capacity of 27 kkg/h (30 tph) per twin-deck table can be expected.

HYDROCYCLONES

Hydrocyclones separate coal from impurities by radially accelerating a stream of slurry and causing a centrifugal as well as gravitational force to act on the material. A separation results producing clean coal (overflow) and refuse (underflow). The overflow will have a relatively low sulfur content and a correspondingly small percentage (3 to 9%) of misplaced material. The underflow will have a relatively high sulfur content and a high percentage (often around 50%) of misplaced coal. Hydrocyclones, when used to treat fine coal of less than 6.4 mm. (1/4 in.), are operated at low pulp densities of 5 to 20% solids. In the United States, hydrocyclones are presently used to clean flotation-size coal of .42 mm. and smaller (35 mesh), but they can be used on coal as coarse as 6.4 mm. (1/4 in.). When the top size of the feed exceeds 6.4 mm., the reduction of ash and sulfur in the minus .149 mm. (100 mesh) fraction is minimal.

The hydrocyclone (water-only cyclone) differs from the conventional dense-medium cyclone as follows:

- hydrocyclone does not employ an artificial gravity suspension, but separation takes place in an autogeneous water medium;
- hydrocyclones have an apex angle of up to 120°, much greater than the apex angle of the dense-medium cyclone;
- the hydrocyclone has a longer vortex finder than does the dense-media cyclone; and
- the hydrocyclone uses much larger underflow and overflow orifices than does a dense-media cyclone of equal diameter.

The hydrocyclone, as a fine coal cleaning device, has advantages over other cleaning devices. Among these are:

- Efficient cleaning of oxidized raw coal of plus .149 mm. (100 mesh).
- Higher pyritic sulfur reduction in .595 x 0 mm. (28 x 0 mesh) coal than that normally accomplished by flotation;
- Simple design incorporating no moving parts and requiring minimal maintenance;
- Low capital investment on a cost-per-ton-processed basis;
- Very little plant space required relative to capacity.

Hydrocyclones have some disadvantages in that:

- separations obtained in a hydrocyclone are not as sharp as those obtainable by certain other processes.
- clean refuse and clean coal cannot be simultaneously produced. The clean coal may be contaminated by high ash fines. In such cases, the hydroclone product must be deslimed in a cyclone and the fines cleaned by flotation.
- hydrocyclones are not applicable to processing difficult-to-clean coal. For an easily cleaned coal it can do as good a job as a table, but can not compete with a feldspar jig. For good cleaning, two-stage separation must be utilized; and
- the large quantity of water required for proper cyclone performance means that a hydrocyclone circuit will be energy intensive.

Hydrocyclone Operation

Figure 15 shows a typical hydrocyclone.

The hydrocyclone body consists of a short cylindrical section which is attached to an inverted truncated conical section. The underflow orifice is at the apex of the conical section and the overflow orifice (vortex finder) is centrally located at the top of the cyclone. A slurry under pressure is introducted tangentially into the cylindrical section of the cyclone where centrifugal forces act on the particles in proportion to their mass. The centrifugal forces acting on the particles increase with decreasing radii, as the slurry moves downward into the conical section of the cyclone. The heavier, more dense (heavy mineral matter and pyritic sulfur) particles of a given size move outward toward the descending vortex more rapidly than their lighter, less dense counterparts. As the lighter particles approach the apex of the cone, they are drawn into the upward-flow vortex next to the central air core where they exit through the overflow as clean coal. The heavier particles, which flow along the cyclone wall, exit through the underflow orifice as refuse.

The cyclone manufacturer will generally determine the cyclone diameter and apex angle for a particular situation. The orifice sizes will influence flow rate, retention time, and solids concentration in the overflow and underflow. The length of the vortex finder is the determining factor in establishing the specific gravity separation point between the underflow and overflow.

Due to the large amounts of relatively low specific gravity, misplaced particles in the underflow, a two-stage or even three-stage hydrocyclone treatment can be very effective in improving the overall efficiency of the circuit. When staging, the underflow product (refuse) from the primary hydrocyclone is the feed to the second cyclone. The overflow from the secondary hydrocyclone joins the washed coal from the primary unit to form the final washed-coal product; the refuse from the secondary hydrocyclone is the final refuse material. In three-stage processing the procedure is repeated between a second and third hydrocyclone.

FIGURE 15. A Typical Hydrocyclone

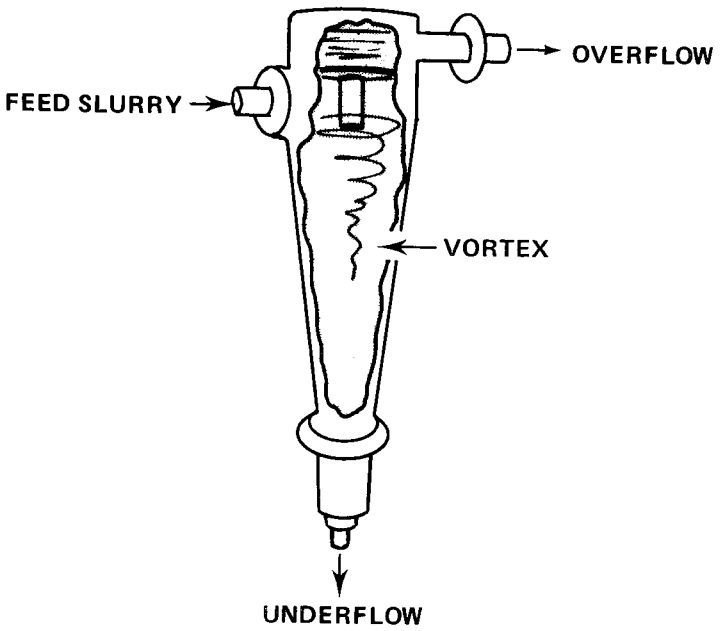

Hydrocyclone Performance

Generally, hydrocyclone diameters range from 50 to 610 mm. (2 to 24 in.). Feed rates can reach 61 kkg/hr. (68 tph). Up to 25 hydrocyclones can be arranged in a single bank with a common manifold in the feed and overflow lines. Generally smaller feed particle sizes require a smaller hydrocyclone diameter.

HEAVY MEDIA CYCLONES

The first heavy media cyclone plants were installed in the United States in 1959. Their use has spread rapidly in the preparation of premium metallurgical coals. New areas for application are being investigated because of the intense interest in preparation of low ash and low sulfur fuels from coal for power generation. Heavy media cyclones effect the low gravity separations required to produce these fuels. They will also be used in preparation of fine coal of minus .595 mm. (28 mesh) where they have been only sparingly applied in the past.

Heavy media cyclones are the most efficient devices available for cleaning of intermediate size coal. In addition, their ability to produce precise separations makes them almost a necessity for cleaning coals with a high percentage of near-gravity material (± 0.10 specific gravity range).

Cyclones for heavy media operation are 300 to 760 mm. (12 to 30 in.) in diameter and have high capacities. A 660 mm. (26 in.) cyclone can process up to 108 kkg/hr. (120 ton/hr.) of feed.

Heavy Media Cyclone Operation

When coal is crushed below about 6.4 mm. (1/4 in.), the difficulty of gravity separation increases, because the time required for any particle to settle in water is dependent upon its specific gravity and the resistance of the water to the settling of the particle. The larger the particle, the faster the sinking rate in proportion to the fluid resistance mass ratio. As particles become smaller, settling times are increased and can be reduced only by the application or force to them. In a cyclone, this force is brought to bear in a centrifugal manner by introducing raw coal and water tangentially into the upper part of the cyclone. In a typical cyclone the centrifugal force acting on a particle in the inlet region is about 20 times greater than the gravitational force in a static bath. As the feed descends in the conical section of the cyclone, the centrifugal force is further increased and may approach over 200 times the force of gravity at the apex. At this point, the cyclone has accomplished a size classification of the particles with the larger particles at the perimeters of the cyclone and the smaller particles near the center of the dense medium cyclone. Figure 16 is a diagram of a dense media cyclone.

To achieve a gravimetric classification in a heavy media cyclone, the water is made more dense by the addition of finely-ground magnetite with the resultant effect that particles having a higher specific gravity are forced to the perimeter of the cone and passed out through the apex as refuse, while the particles of lesser specific gravity remain near the vortex finder and pass out through the top of the cone as clean coal.

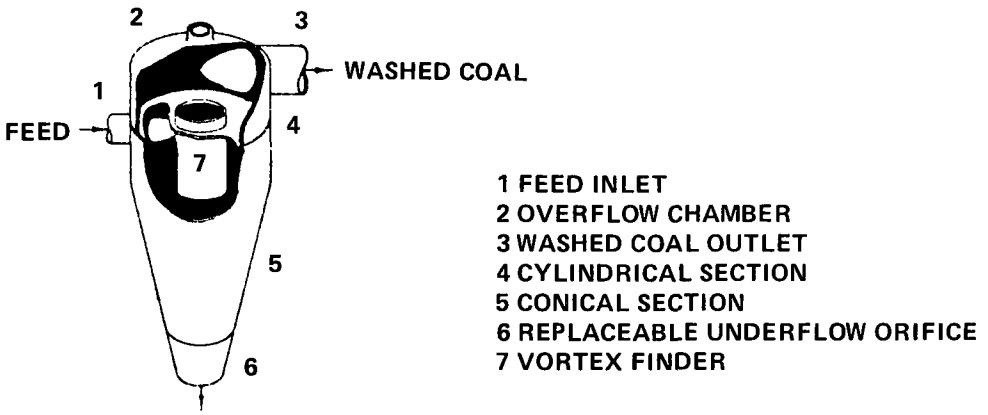

FIGURE 16 A DENSE MEDIUM CYCLONE

The general flow pattern of the medium in a cyclone consists of a descending vortex that originates at the inlet and progresses through the cyclone to the underflow outlet. As the descending vortex passes down the cyclone, part of the fluid flows toward the center of the cyclone to form an ascending vortex. This ascending vortex, in turn, surrounds a cylindrical air core that encircles the entire longitudinal axis of the cyclone. An additional factor that influences the separation is the progressive increase in specific gravity of the medium as it descends toward the apex. This increase occurs because the centrifugal force also tends to force the magnetite particles in the medium towards the cyclone wall where they are preferentially caught in the descending vortex, thus resulting in a progressively higher concentration of particles in the medium as the apex is approached. Therefore, the specific gravity of the medium flowing through the underflow orifice is higher than the specific gravity of the circulating medium; conversely, the specific gravity of the medium passing through the overflow orifice is less.

The paths followed by the coal and impure particles in a cyclone have been studied by observations in glass or clear plastic cyclones and are still not fully understood. The refuse particles flow to the wall soon after they enter the cyclone, are entrained in the descending vortex and are discharged through the underflow orifice. The coal particles are also initially entrained in the descending vortex in the upper part of the cyclone, and

curiously, a large number of them descend well into the conical part of the cyclone before they are trapped by the ascending vortex. This behavior has been explained by postulating a barrier of high specific gravity that is due to circulating medium particles in the lower part of the cyclone. When the descending coal particles reach this zone, they migrate toward the central air core where they are then caught in the ascending vortex and pass through the overflow opening. The existence of a barrier, however, cannot entirely explain the path of the coal particles because observation of the particles in a glass cyclone when using an organic heavy liquid shows that they behave similarly; that is, many coal particles descend well into the conical section before they migrate to the ascending vortex. Clearly, a heavy organic liquid is homogeneous and a barrier cannot be present, yet the separation is very sharp. It is also interesting to note that the specific gravity of separation is almost always higher than the specific gravity of the medium when using either a heavy liquid medium or a magnetite dense medium.

Heavy Media Cyclone Performance

Table 5 provides operating results and test data on both washed coal and refuse, along with the distribution curve or product distribution of washed coal and refuse. The separation for this particular coal was made at a specific gravity of 1.35 and a 6% ash product was obtained. It is to be noted that the near gravity material (+ or - 0.10%) was 77.3%. The washed coal has no misplacement of material above 1.45 specific gravity while the refuse contains very little minus 1.30 specific gravity material.

Recent Technology

The swirl heavy media cyclone offers a new approach in that it is an inverted cyclone which was patented by Dutch State Mines and developed further in Japan by the Tagawa Machinery Works. The conical portion of the cyclone is at the top and the cylindrical portion at the bottom which results in the refuse discharging from the top and the clean coal from the bottom. This cyclone is said to be able to use a coarser magnetite which can result in lower magnetite loss. The air column inside the conventional cyclone is sometimes unstable; in the swirl cyclone this air column is stablized by an air pipe which is open to the atmosphere. The design is such that the height

TABLE 5

HEAVY MEDIA CYCLONE OPERATING RESULTS FOR 31.75 x 0.75 mm. RAW COAL FEED (1 1/4 x 1/32 in.)

Gravity		Reconstituted Raw Coal				Washed Coal				Distribution Curve or Product Distribution	
		Direct		Cumulative		Feed		Refuse Feed		Washed	
Sink	Float	% Wt.	% Ash	% Wt.	% Ash	% Wt.	% Ash	% Wt.	% Ash	Coal	Refuse
	1.25	5.5	2.32	5.5	2.32	5.5	2.32	0.0	—	100.0	0.0
1.25 x 1.30		39.6	5.02	45.1	4.69	38.7	5.03	0.9	4.5	97.7	2.3
1.30 x 1.35		17.1	9.24	62.2	5.94	11.8	8.95	5.3	9.9	69.0	31.0
1.35 x 1.40		12.2	13.70	74.4	7.21	3.0	12.18	9.2	14.2	24.6	75.4
1.40 x 1.45		8.4	18.74	82.8	8.38	0.2	16.10	8.2	18.8	2.4	97.6
1.45 x 1.50		2.7	21.60	85.5	8.80	0.0	-	2.7	21.6	0.0	100.0
1.50 x 1.55		3.6	24.70	89.1	9.44	0.0	-	3.6	24.7	0.0	100.0
1.55 x 1.60		1.8	31.00	90.0	9.87	0.0	-	1.8	31.0	0.0	100.0
1.60		9.1	50.80	100.0	13.59	0.0	-	9.1	50.8	0.0	100.0
		100.0	13.59			59.2	5.96	40.8	24.67		

The above performance at 1.35 specific gravity shows a washed coal recovery of 59.2% when obtaining a 6% ash product. These results are very good considering the wide size range of 31.75 x 0.75 mm. (1 1/4 x 1/32 in.) being handled in the cyclone and the extreme amount of near gravity material (77.3%) at the separating gravity.

of the air vent can be varied, as can the height of the vortex finder and the diameter of the apex nozzle. The feed nozzle is also designed so that the area of the opening can be adjusted by a regulating plate. This cyclone is said to provide a sharpness of separation and efficiencies comparable to conventional cyclones and may offer possibilities in treating larger coal sizes.

THE OTISCA PROCESS

A discussion of the Otisca Industries, Ltd. process for coal benefication is based on those theories which control the process of sink-float separation. The separation of coal (1.20 - 1.45 specific gravity) from the undesirable mineral matter (ash of 2.0 - 2.5 specific gravity, and iron pyrite of 4.9 - 5.0 specific gravity) can be accomplished by separating particles of each in a liquid which has a specific gravity midway between the components to be separated.

Stoke's Law states that the velocity of sink-float separation is inversely dependent on the viscosity of the separating fluid and directly proportional to the square of the particle size, as well as directly proportional to the difference in specific gravity between the coal and the separating fluid. The Table below presents the viscosities of some common separating liquids:

Viscosities of Common Separating Liquids

	Viscosity at 20°C in Centipoise
Carbon tetrachloride	0.969
Tetrachloroethane	1.844
Water	1.00
Bromoform	2.152
-325 mesh magnetite and water (fresh)	4.5
Otisca Media	1.4

An added effect is due to the surface tension of the separating fluid. Surface tensions of common separating liquids are given below.

Surface Tensions of Common Separating Fluids

	Surface Tension in $\frac{\text{Dynes}}{\text{cm}}$
Carbon Tetrachloride	27
Tetrachloroethane	36
Water	75
Bromoform	41.5
-325 mesh magnetite and water	75
Otisca Media	Range of 20

If the coal is not completely wetted by the separating media, entrapped air bubbles on the coal and on the ash matter tend to move both particles toward a common density, irrespective of their inherent bulk densities. As a consequence, separation becomes more difficult. Clearly, there is a major problem in separations when the particle size of the coal decreases below one millimeter. Liquids with properties which tend to permit the free surfaces (micro-cracks, etc.) of coal and rock to become wetted instantaneously and completely will have a distinct advantage over the other liquids in that they will tend to accentuate differences in specific gravity.

The loss in separation efficiency (often 10 to 30%) commonly experienced during the transfer of "theoretical" washability data to the conventional hydro-beneficiation systems is due, in part, to the fact that a water-magnetite suspension has a higher viscosity than that of the heavy liquids used in laboratory testing. Since the Otisca "media-only" Process uses the low-viscosity fluid directly, little or no efficiency loss occurs between bench scale testing and actual production.

An actual case involving settling-pond coal particles is illustrated below. The size consist of the coal is given below.

Size Consist of Settling Pond Coal Fines

		%	Cumulative %
+0.25 mm.	(+60 mesh)	0.6	0.6
+0.15 mm.	(+100 mesh)	2.0	2.6
+0.066 mm.	(+230 mesh)	21.4	24.0
-0.066 mm.	(-230 mesh)	76.0	100.0

Moisture	10 - 30%
Ash	20 - 30%
Sulfur	2%

The following results were observed after cleaning this coal with the Otisca "media-only" Process:

Weight Yield	80% (wet coal)
Ash	8%
Sulfur	Below 1.5%

These data demonstrate that the ultrafine clay particles which contaminate the product coal have been separated.

The Otisca "media-only" beneficiation Process does not use any process water and the resultant coal product contains about the same or less moisture concentration as that which was charged into the process.

The Otisca Process makes the following claims:

- sharp separations even when processing fine coal;
- specific gravity of separation very near to that of the clean coal itself; and
- separations unaffected by the size consist of the feed coal.

Otisca Process Flow Sheet Description

The flow sheet presented in Figure 17 describes the main operations involved in an Otisca "media-only" coal beneficiation plant.

Raw coal first enters a mechanical comminution stage, designed to optimize the release of sulfur and ash. The comminution can optionally be carried out in air or in a bath of media liquid, depending on the specific morphology of the coal being cleaned. Next, the comminuted coal is conveyed to a static bath of media liquid. Finally, the float-sink fractions are separately conveyed to respective media liquid stripping and drying operations, where virtually all of the media is removed from the coal and refuse and delivered to a media regeneration station. The regenerated media is then delivered to the separation bath.

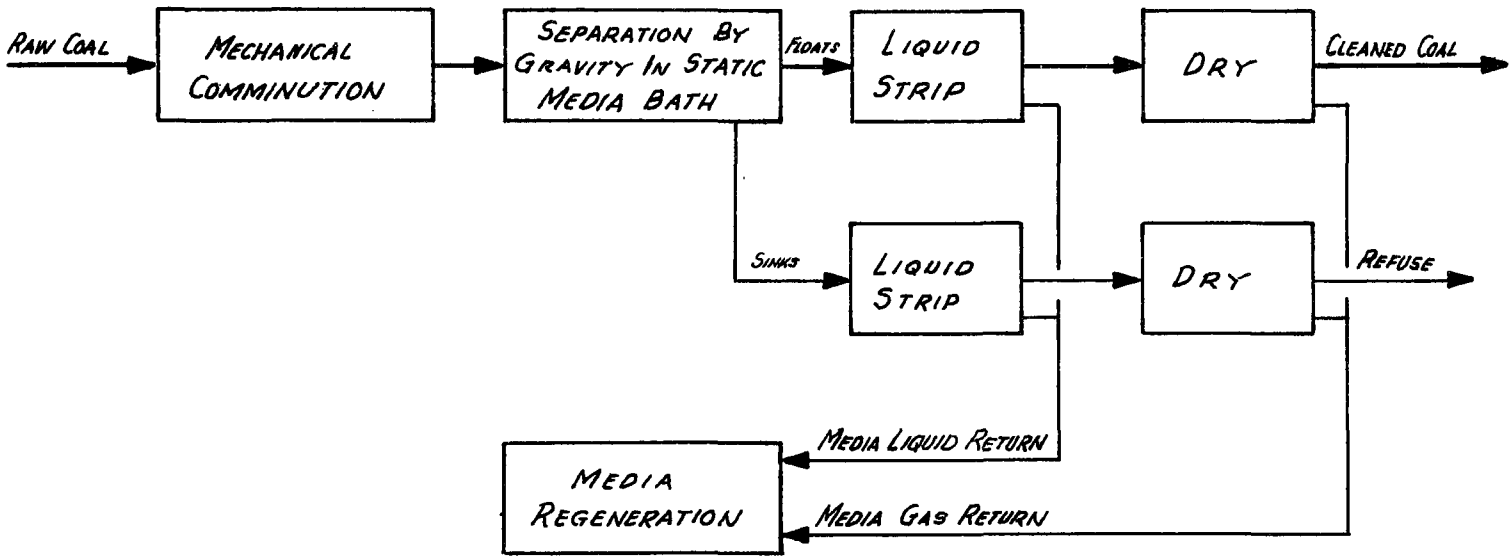

FIGURE 17. Basic-Media-Only Coal Beneficiation Plant

Performance

The Otisca Process has undergone pilot plant testing and the concept utilizing an organic liquid of low viscosity has proven to be workable. The major problem encountered to date has been the cost of media lost during the process. Cost per ton of feed coal currently runs around $1.50.

CONE CONCENTRATORS

Cone concentrators were first developed in the early 1960's by Mineral Deposits Ltd. of Australia, where they were used on mineral-bearing beach sands. They are now being investigated for possible applications in coal processing. The high capacity of 36 to 90 kkg/hr. (40 to 100 tph) at 55 to 70% solids by weight, the low installation cost (due to modular design, minimal pumping distances and a minimal number of circuit stages), and the low operating costs (due to the absence of moving parts and low operator loading) combine to make the cone concentrator a viable alternative to some of the equipment currently being used in the United States, especially in the area of secondary cleaning.

Cone Concentrator Operation

Cone concentrators use the principle of flowing-film concentration. The basic separation element in the cone concentrator is a 1.90 meter (75 in.) diameter, 17° inverted cone. Feed pulp is evenly distributed around the top of the distribution cone. As the feed pulp flows down to the periphery of the distribution cone, a rubber "finger" splitter evenly divides the feed between two concentrating cones that operate in parallel and are superimposed one above the other (the concentrating capacity in a given floor area is therefore doubled). As the pulp flows toward the center of the concentrating cone, the fine and heavy (pyritic sulfur) particles separate to the bottom of the film and are removed by an annular slot in the bottom of the concentrating cone. The efficiency of this process is relatively low and is repeated several times within a single machine to achieve an effective separation. The clean coal flows over the discharge slot and passes into a central discharge pipe for repeated processing.

Cone concentrators accept feed particles in the ranges of 3.3 to 0.04 mm. (6 to 400 mesh); the optimal size being about 0.59 mm. (28 mesh).

The best separation results are obtained when the feed tonnage, density and character are not varied. Variations can be tolerated for short periods of time, but only at the expense of recovery and wear rate.

VOR-SIV

The Vortex Dewatering Sieve, commonly known as a Vor-Siv, was developed by the Polish Coal Industry to fit the need for a unit that would dewater and classify slurries of high solids concentration. Today this device is manufactured under license from the Polish government and, as of 1976, there were 36 Vor-Sivs operating in the U.S.A., with another 20 in the process of being installed or delivered. The Vor-Siv combines the operating characteristics found in cyclones, sieve bends, cross flow screens, and vibrating screens. It has no moving parts, and requires no energy to operate.

Vor-Siv Operation

Classifying of solids by the Vor-Siv is accomplished by the spiraling or vortex flow of a slurry over a stationary, inverted cone-shaped, wire screen. Material to be classified is gravity fed, or pumped, in slurry form through the inlet nozzle. A covered trough directs the flow around a circular raceway and down onto a fine screen positioned at a 45° angle to the raceway.

The vortex motion, created by centrifugal and gravitational forces, causes the solids in the slurry to change from a radial flow to a downward spiraling path on the surface of the inverted cone screen. A discharge outlet is provided for the coarse material.

The undersize solids, with a topsize of less than 0.59 mm (28 mesh), and the accompanied liquid circulate in an almost horizontal path and are discharged through slits in the screen.

Wear is a major concern in all fine screening devices. While the wedgebars in the Vor-Siv are much heavier than the wire used in fine screen cloth, wear does occur and increase the gap between bars. Wear and blinding (blocking of screen holes by near size particles) must be monitored to assure efficient operation. The direction of flow can be changed by flipping the inlet nozzle which presents the slurry with a new leading edge

and therefore extends screen life. The basket can also be rotated either counterclockwise or clockwise so that every area is completely utilized.

Vor-Siv Performance

To date, the Vor-Siv has not been applied to the separation of sulfur and mineral matter from raw coal. For classifying, the Vor-Siv has received feeds to minus 8.3 mm. (5/16 in.) solids in slurries ranging from 10 to 30 percent solids and feed rates up to 200 l/sec (3,200 gpm). Dry solids have been successfully treated at a rate of 135 kkg/hr. (150 ton) in a single 2-meter-diameter (6.6 ft.) unit.

In general, a sieve bend or cross flow screen making a 0.59 mm. (28 mesh) separation can be expected to handle about 20 to 27 l/sec/m^2 (30 to 40 gpm/ft^2) of wire surface, whereas a Vor-Siv will handle from 35 to 48 l/sec/m^2 (50 to 70 gpm/ft^2) of screen area.

SPIRAL CONCENTRATORS

Spiral concentrators are simple devices for separating pyritic sulfur and ash from coal in accordance with their physical properties, primarily specific gravity and particle size. Although not widely used in coal preparation, tests on fine coal 4.7 to 0.4 mm (4 to 35 mesh) suggest they should be considered along with wet concentrating tables and hydrocyclones as a "rougher" cleaning unit. They could be used to remove pyritic sulfur from high-sulfur coals prior to flotation. Spiral concentrators have no moving parts and require minimum energy.

Spiral Concentrator Operation

Gravimetric separation by spiral concentrators is accomplished by a combination of centrifugal forces and gravitational forces. The spiral concentrator consists of a spiral conduit of modified semicircular cross-section. Feed pulp is introduced at the top of the spiral and flows downward until centrifugal forces cause the heavier particles (pyritic sulfur) to stratify and to concentrate in a band along the inner side of the spiral. The heavier particles are removed through adjustable portholes located on each turn of the spiral at the lowest point in the cross section of the conduit. As the spiral stream approaches the lower end of the spiral, an adjustable splitter

divides the stream into two productions; a clean coal product and a middlings product.

Spiral Concentrator Performance

Good results can be expected when spiraling coals of top sizes ranging from 4.7 to 0.4 mm. (4 to 35 mesh) with 1.17 mm. (14 mesh) being the optimum value. The reduction of sulfur rapidly diminishes for coal approaching minus 0.15 mm. (minus 100 mesh). This is a normal characteristic of specific gravity separators.

Capacities range up to 1.8 kkg/h (2 tph) for a single spiral and banks of 80 or more spirals are common.

VORSYL

The Vorsyl was developed by the National Coal Board (NCB) of the United Kingdom, where it is used extensively, to produce low-sulfur low-ash coking coal and to recover anthracite from waste banks. The Vorsyl separator incorporates the operating principles of centrifugal force developed by vortex flow and dense medium cleaning, has no moving parts and requires no energy for operation.

Vorsyl Operation

The Vorsyl separator is a completely cylindrical vessel usually installed in the vertical postion. The vessel contains an axially-arranged open-ended vortex finder for removal of clean coal through the base of the chamber. The throat is concentric with the vortex finder and provides an annular opening for discharge of the refuse and the remaining dense medium. These are routed to the shale chamber and the vortextractor. The vortextractor has a tangential inlet and axial outlet to induce an inward spiral flow to the outlet so that pressure is dissipated.

Feed, consisting of deslimed raw coal together with the dense medium, is introduced tangentially at the top of the vessel. Material of specific gravity considerably less than the separating gravity passes immediately to the clean coal outlet via the vortex finder.

The heavier refuse particles move to the wall of the vessel as a result of the centrifugal force induced by the vortex motion of the feed fluid. These particles move toward the base of the vessel where the tangential velocity is reduced by drag forces. Zones of high centrifugal force exist where the final precise separation takes place. Refuse is discharged through the throat and near-gravity (± 0.1 specific gravity range) clean coal is carried up the outer wall of the vortex finder to the product discharge.

Vorsyl Performance

Generally, Vorsyls show the same efficiency as conventional dense medium cyclones except at the top end. This means that the Vorsyl will have virtually no misplaced material that is susceptible to gravimetric separation in the clean coal. The Vorsyl handles feed of 25 x 0.54 mm. (1 in. x 28 mesh). The 76 cm. (30 in.) diameter unit has a capacity of 91 kkg/hr. (100 tph). The magnetite used should be less than 20% of the medium (volumetric basis) and should contain minus 50 micron (270 mesh) particles in excess of 90%.

The overall efficiency is not affected significantly by minor variations in design parameters such as feed pressure, vortextractor orifice diameter or vortex finder length. This enables the Vorsyl to handle variations in flow rates and consistencies without a loss in efficiency.

FLOTATION

Froth flotation is a physical-chemical process for the separation of suspended solids, based upon selective adhesion to air of some solids and the simultaneous adhesion to water of other solids. Separation of coal from coal waste occurs as finely disseminated air bubbles are dispersed throughout a coal-water slurry. The coal particles in the slurry adhere to the air bubbles and are transported to the free surface of the pulp. These bubbles and their attached coal particles, commonly referred to as froth, are then removed; the ash and sulfur bearing material remain in suspension and are passed through the cells.

The chemical process of bubble adhesion can be selectively modified by the addition of certain reagents. These reagents either enhance the floating characteristics of coals or the wetting characteristic (water attraction) of the waste material. Reagents are also used to stabilize the froth, thus allowing sufficient time for removal of the floated coal.

Coal flotation is influenced by several factors;

- particle size;
- oxidation and rank of coal;
- pulp density;
- chemistry of plant water - pH especially;
- flotation reagents; and
- flotation equipment

Particle Size:

Flotation processing is normally used in the cleaning of coal of a top-size of 1.17 to 0.30 mm. (14 to 48 mesh). Flotation can be used on coal as fine as 0.04 mm. (325 mesh) but product recovery and grade can be affected. Flotation is a highly efficient method for reducing both sulfur and ash in the 1.17 x 0.30 mm. (14 x 48 mesh) sizes while hydrocyclones are more efficient for the reduction of pyrite in the minus 0.30 mm. (48 mesh) coal.

Oxidation and Rank of Coal

The most important parameter in flotation chemistry is the surface characteristics of the coal particle. Oxidized coals and high volatile coals are not readily amenable to flotation.

Pulp Density:

The percentage of solids in the feed slurry has an overall effect on cell productivity. Flotation cells are normally operated at pulp densities of 3 to 20% solids. The size consist of the feed is the main factor influencing the percent solids at which maximum efficiency can be achieved. Coal in the 1.17 x 0.30 mm. (14 x 8 mesh) range can be floated efficiently

at around 15% solids, but coal in the 0.59 x 0.07 mm. (28 x 200 mesh) range must be floated at approximately 5 to 7% solids, if acceptable recovery is to be maintained.

Chemistry of Plant Water:

The pH of the slurry water has an effect on the recovery and quality of the floated coal. The relationship between pH and product recovery is illustrated in Figure 18. The optimum pH for maximum recovery is between 6 and 7.5.

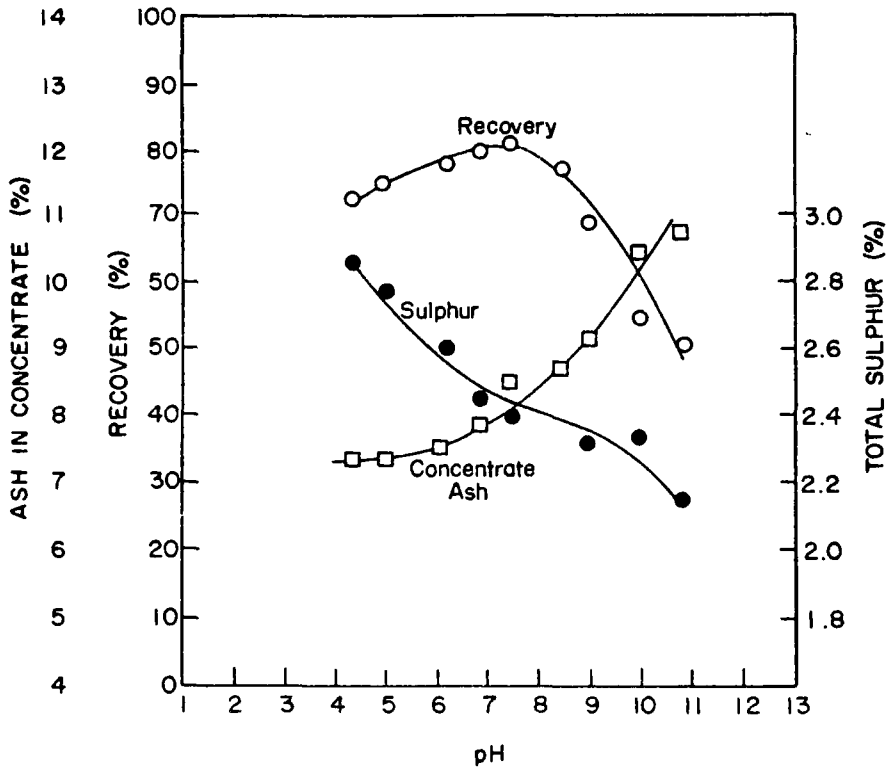

FIGURE 18. Relationship Between pH and Product Recovery

Flotation Reagents:

The amounts and kinds of reagents used are extremely critical to the flotation process. There are three general classes of reagents; frothers, collectors, and modifying agents. Frothers (frothing agents) are used primarily to facilitate the production of a stable froth. Collectors or promoter reagents are used to increase the contact between the coal particles and the air bubbles by forming a thin coating over the particles, thus rendering them water repellent. Modifying agents are a large group of chemical reagents that are used to perform varying functions such as:

- depressing agents which inhibit flotation;
- activating agents which promote particle coating;
- pH regulators which control acidity or alkalinity of the pulp;
- dispersing agents which are used to deflocculate troublesome minerals and control slime absorption; and
- protective colloids which have dispersive effects and can be also used as depressants under some conditions.

Operation

Flotation equipment has evolved during approximately 60 years of development. Flotation equipment, as used in coal processing plants, is based upon well-tested designs. Flotation machines are of two basic types; mechanically-agitated or pneumatic. Both types perform the following functions:

- pulp agitation;
- introduction and dissemination of fine air bubbles; and
- transportation and removal of the products and refuse.

These functions are, at times, in conflict; and the efficient operation of a flotation cell requires that certain compromises be reached. Figure 19 is an illustration of the flow patterns in a currently available cell.

Flotation cells are usually grouped in a bank of 4 or 5 cells. The number of cells determines the particle retention time while the capacity of each cell determines tonnages.

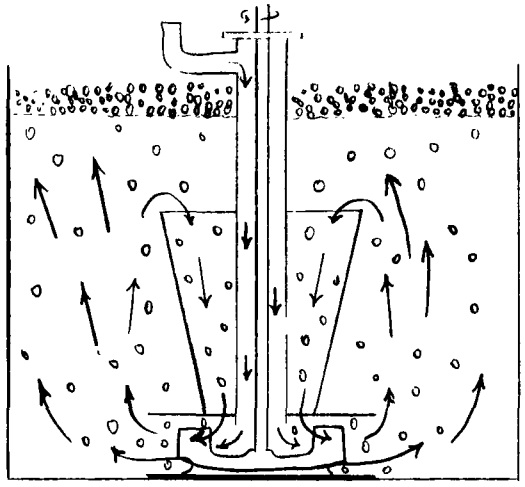

FIGURE 19. FLOTATION CELL

Performance

There are numerous complex variables that determine the performance of coal flotation. In general, well-designed, properly maintained and efficiently operated two-stage circuits can remove 50 to 60 percent of the liberated pyrite while maintaining a product recovery of 80 to 85 percent.

Recent Technology--

Due to increasingly stringent air pollution standards, new technology is being directed at improving sulfur rejection. Recent studies by the U.S. Bureau of Mines and flotation manufacturers have resulted in improved coal flotation processes, summarized as follows:

Rougher-Cleaner Flotation

- condition pulp at 10% solids with $FeCl_3$.
- condition pulp at 10% solids with No. 2 fuel oil or kerosene.
- add Methyl isobutyl carbonyl (MIBC) sparingly to rougher circuit, using stage addition of MIBC as needed, and produce a rougher concentrate low in ash and pyritic sulfur. The

sulfur and ash are rejected as tailings.

- add MIBC to rougher concentrate in cleaner circuit, dilute to 10% solids, using stage addition of MIBC if needed, and produce a final clean concentrate.

U.S. Bureau of Mines Two-Stage Flotation

- condition pulp at 10% solids with No. 4 fuel oil or kerosene.
- add MIBC to first stage circuit, using stage addition of MIBC to float the coal, and produce a first-stage coal coal concentrate low in ash and high in pyritic sulfur.
- dilute the resulting first-stage coal concentrate to 10% solids, adjust pH to 6.5 with hydrochloric acid and condition with Aero Depressant 633 followed by the addition of a pyrite collector (potassium amyl xanthate) to depress the coal and float the pyrite.
- add MIBC to the pulp in the second stage circuit, using stage addition of MIBC if needed, and produce a final concentrate from the second stage that is high in pyritic sulfur. The resulting clean coal, low in ash and pyritic sulfur, is the tailing product from the second stage of flotation.

In general, both of these methods are effective in removing sulfur. Some coals are not amenable to either process.

SECTION 4

CURRENT PROCESS TECHNOLOGY FOR CHEMICAL COAL CLEANING

Chemical coal cleaning processes are still under development. None of these processes have been tested in units larger than eight metric tons per day and only one process at that size. Consequently, performance and cost comparisons are relatively uncertain at this time. The chemical coal cleaning processes vary substantially in their approach, because of the large number of possible reaction mechanisms and chemicals which can be used to effect removal of sulfur and other reactive impurities in coal. Most chemical processes remove over 90 percent of the pyritic sulfur and several are reported to remove up to 40 percent of the organic sulfur as well.

Twenty-nine chemical coal cleaning processes were identified during a technology overview study. Eleven U.S. processes are classified as major processes. The other processes, which are considered minor, are listed in tables later in this section. Further processes of importance may exist, but were not identified in the search conducted in this study.

The eleven major chemical coal cleaning processes exhibit a great deal of diversity with respect to such variables as:

- kinds and amounts of sulfur removed
- type of coal successfully desulfurized
- degree of coal crushing and grinding prior to chemical processing
- state of process development
- process chemistry
- major process steps
- prospects for technical and economic success

Table 6 is a listing of the major processes and summarizes some of the above factors. The first four processes listed (Magnex℠, Syracuse, TRW and Ledgemont) will remove pyritic sulfur only; the remaining seven processes

TABLE 6. PROCESS INFORMATION SUMMARY OF MAJOR CHEMICAL COAL CLEANING PROCESSES

PROCESS & SPONSOR	METHOD	TYPE SULFUR REMOVED	STAGE OF DEVELOPMENT	PROBLEMS	ANNUAL OPERATING COST $/TON CLEAN COAL INCLUDING COST OF COAL*
MAGNEX(SM), HAZEN RESEARCH INC., GOLDEN COLORADO	DRY PULVERIZED COAL TREATED WITH FE $(CO)_5$ CAUSES PYRITE TO BECOME MAGNETIC. MAGNETIC MATERIALS REMOVED MAGNETICALLY	UP TO 90% PYRITIC	BENCH & 91 KG/DAY (200 LB/DAY) PILOT PLANT OPERATED	DISPOSAL OF S-CONTAINING SOLID RESIDUES. CONTINUOUS RECYCLE OF CO TO PRODUCE FE $(CO)_5$ REQUIRES DEMONSTRATION	38.7
"SYRACUSE" SYRACUSE RESEARCH CORP., SYRACUSE, N.Y.	COAL IS COMMINUTED BY EXPOSURE TO NH_3 VAPOR; CONVENTIONAL PHYSICAL CLEANING SEPARATES COAL/ASH	50-70% PYRITIC	BENCH SCALE	DISPOSAL OF SULFUR CONTAINING RESIDUES.	39.14
"MEYERS", TRW, INC. REDONDO BEACH, CAL.	OXIDATIVE LEACHING USING $FE_2(SO_4)_3$ + OXYGEN IN WATER	90-95% PYRITIC	8 METRIC TON/DAY PDU FOR REACTION SYSTEM. LAB OR BENCH SCALE FOR OTHER PROCESS STEPS.	DISPOSAL OF ACIDIC $FESO_4$ & $CASO_4$, SULFUR EXTRACTION STEP REQUIRES DEMONSTRATION	43.4
"LOL" KENNECOTT COPPER CO. LEDGEMONT, MASS.	OXIDATIVE LEACHING USING O_2 AND WATER @ MODERATE TEMP. AND PRESSURE	90-95% PYRITIC	BENCH SCALE	DISPOSAL OF GYPSUM SLUDGE, ACID CORROSION OF REACTORS	45.3

* RAW COAL COST IS INCLUDED AT $27.6/METRIC TON ($25/TON).

TABLE 6. (CONTINUED)

PROCESS & SPONSOR	METHOD	TYPE SULFUR REMOVED	STAGE OF DEVELOPMENT	PROBLEMS	ANNUAL OPERATING COST $/TON CLEAN COAL INCLUDING COST OF COAL*
"ERDA" (PERC) BRUCETON, PA.	AIR OXIDATION & WATER LEACHING @ HIGH TEMPERATURE AND PRESSURE	~95% PYRITIC; UP TO 40% ORGANIC	BENCH SCALE 11 KG/DAY (25 LB/DAY) CONTINUOUS UNIT UNDER CONSTRUCTION	GYPSUM SLUDGE DISPOSAL ACID CORRROSION AT HIGH TEMPERATURES	51.6
"GE" GENERAL ELECTRIC CO., VALLEY FORGE, PA.	MICROWAVE TREATMENT OF COAL PERMEATED WITH NAOH SOLUTION CONVERTS SULFUR FORMS TO SOLUBLE SULFIDES	~75% TOTAL S	BENCH SCALE	PROCESS CONDITIONS NOT ESTABLISHED CAUSTIC REGENERATION PROCESS NOT ESTABLISHED.	40.2
"BATTELLE" LABORATORIES COLUMBUS, OHIO	MIXED ALKALI LEACHING	~95% PYRITIC; ~25-50% ORGANIC	9 KG/HR (20 LB/HR) MINI PILOT PLANT AND BENCH SCALE	CLOSED LOOP REGENERATION PROCESS UNPROVEN. RESIDUAL SODIUM IN COAL	56.1
"JPL" JET PROPULSION LABORATORY PASADENA, CAL.	CHLORINOLYSIS IN ORGANIC SOLVENT	~90% PYRITIC; UP TO 70% ORGANIC	LAB SCALE BUT PROCEEDING TO BENCH AND MINI PILOT PLANT	ENVIRONMENTAL PROBLEMS. CONVERSION OF HCL TO CL_2 NOT ESTABLISHED	45.9
"IGT" INSTITUTE OF GAS TECHNOLOGY CHICAGO, ILL.	OXIDATIVE PRETREATMENT FOLLOWED BY HYDRODESULFURIZATION AT 800°C	~95% PYRITIC; UP TO 85% ORGANIC	LAB AND BENCH	LOW BTU YIELD (<55%). CHANGE OF COAL MATRIX	65.7

*RAW COAL COST IS INCLUDED AT $27.6/METRIC TON ($25/TON).

TABLE 6. (CONTINUED)

PROCESS & SPONSOR	METHOD	TYPE SULFUR REMOVED	STAGE OF DEVELOPMENT	PROBLEMS	ANNUAL OPERATING COST $/TON CLEAN COAL INCLUDING COST IN COAL*
"KVB" KVB, INC. TUSTIN, CAL.	SULFUR IS OXIDIZED IN NO_2-CONTAINING ATMOSPHERE. SULFATES ARE WASHED OUT.	~95% PYRITIC; TO 40% ORGANIC	LABORATORY	WASTE & POSSIBLY HEAVY METALS DISPOSAL, POSSIBLE EXPLOSION HAZARD VIA DRY OXIDATION.	46.90
"ARCO" ATLANTIC RICHFIELD COMPANY HARVEY, ILL.	TWO STAGE CHEMICAL OXIDATION PROCEDURE	~95% PYRITIC; SOME ORGANIC	CONTINUOUS 0.45 KG/HR (1 LB/HR) BENCH SCALE UNIT	UNKNOWN	46-58 (ESTIMATES)

*RAW COAL COST IS INCLUDED AT $27.6/METRIC TON ($25/TON).

(ERDA, GE, Battelle, JPL, IGT, KVB and ARCO) claim to remove most of the pyritic sulfur and varying amounts of organic sulfur. Also, the first two processes are unique in that the coal is chemically pretreated, then sulfur separation is subsequently achieved by mechanical means. The remaining nine processes are more typically chemical in that sulfur compounds in the coal are chemically attacked and removed. A capsule summary of each major process follows.

MAGNEX(SM) PROCESS

In this process, dry, pulverized (minus 14 mesh) coal is pretreated with iron pentacarbonyl to render the mineral components of the coal magnetic. Separation of pyrite and other mineral elements from the coal is then accomplished magnetically. Figure 20 is a flow diagram of the Magnex(SM) process.[1] The cost of the Magnex(SM) process critically depends on the recycle of the chemical reactant iron carbonyl. It is claimed that iron carbonyl can be produced on-site from carbon monoxide released in the process, however, the continuous recycle of carbon monoxide to produce low cost iron carbonyl requires pilot plant demonstration. Approximately 40 coals, mostly of Appalachian origin, have been evaluated on a laboratory scale. These coals are rich in pyritic sulfur and are thus most applicable to this process. For the most part, the process will produce coals which meet state regulations for sulfur dioxide emissions of less than 4.3 kg $SO_2/10^6$ kg cal (2.4 lb $SO_2/10^6$ BTU). This process does not remove organic sulfur from coal.

SYRACUSE PROCESS

Coal of about 3.8 cm (1½") top size is chemically comminuted by exposure to moist ammonia vapor at intermediate pressure.[2] After removing the ammonia, conventional physical coal cleaning then effects a separation of coal from pyrite and ash. The Syracuse process flow diagram is shown in Figure 21. This process is claimed to produce less fines than mechanical crushing, and to achieve more effective liberation of pyritic sulfur. Generally, 50-70% of pyritic sulfur has been removed from Appalachian and Eastern Interior coals, producing coals which meet many state regulations for sulfur dioxide emission. Construction of a 36 metric tons per day (40 tons per day) pilot plant is in the planning stages.

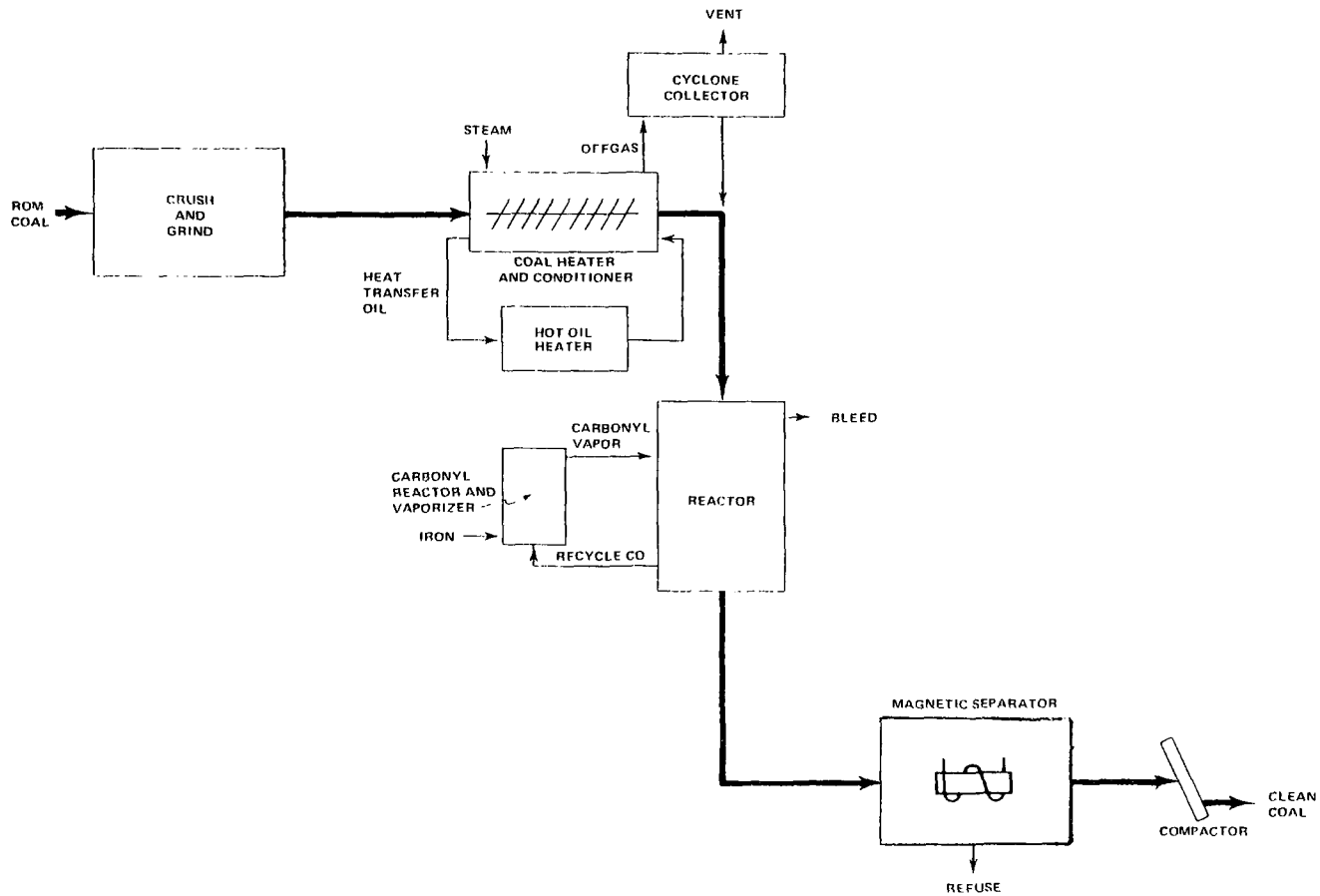

(SM)

FIGURE 20 MAGNEX PROCESS FLOW SHEET

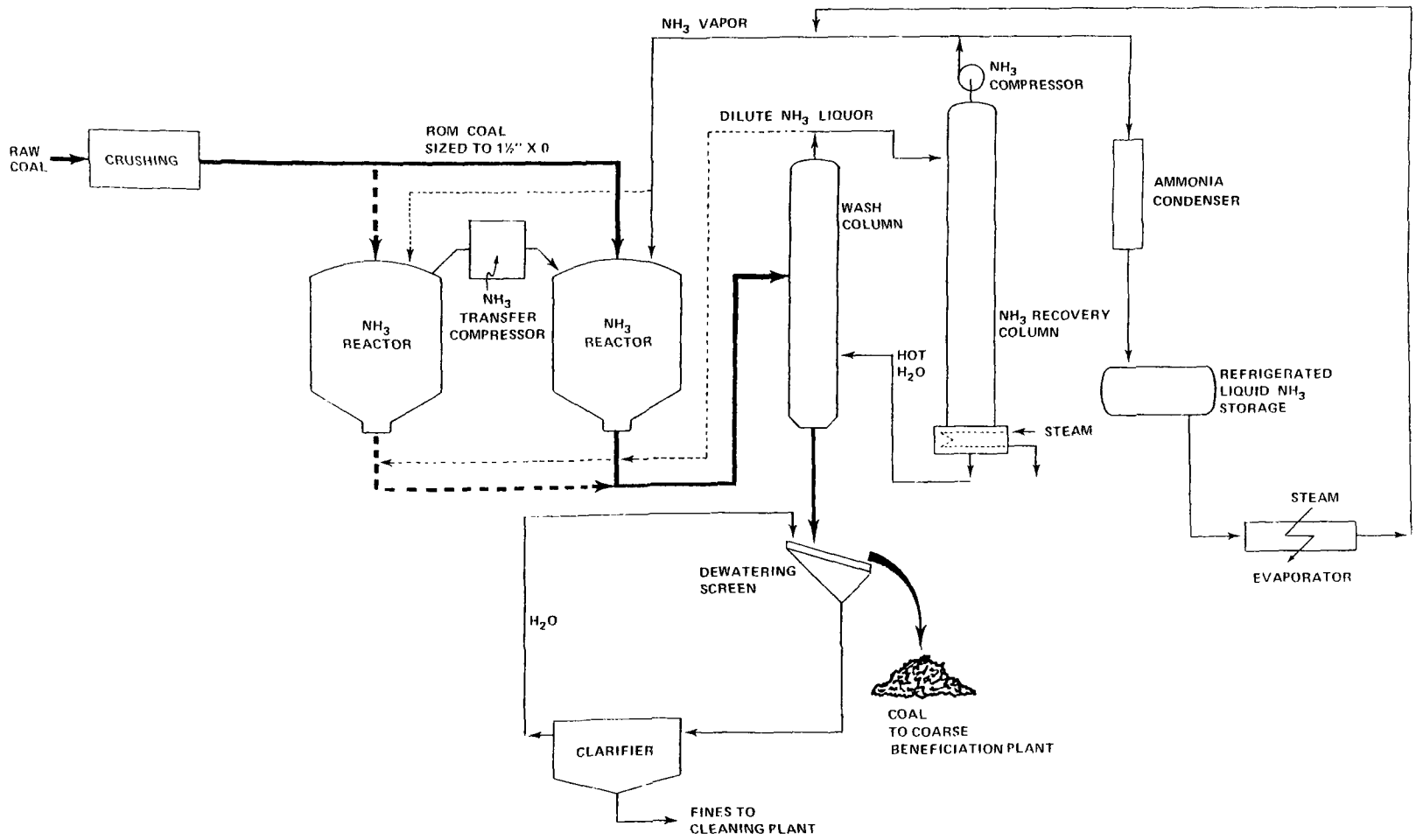

FIGURE 21 SYRACUSE COAL COMMINUTION PROCESS FLOW SHEET

MEYERS PROCESS

This process is the most advanced of the chemical coal cleaning processes, with a 9 metric ton per day Reactor Test Unit (RTU) in operation. A flow diagram of the process is shown in Figure 22. The process removes 80-99% of the pyritic sulfur from nominally 14 mesh top size coal. It uses an aqueous solution of ferric sulfate and sulfuric acid to effect a chemical leaching at moderate temperatures and pressures, but at rather long holding periods (8-13 hours). Thirty-two different coals have been tested: twenty-three from the Appalachian Basin; six from the Interior Basin; one from the Western Interior Basin and two western coals. The Meyers process is more applicable to coals rich in pyritic sulfur, thus about one-third of Appalachian coal could be treated to sulfur contents of 0.6 to 0.9 percent to meet the sulfur dioxide emission requirements of current EPA NSPS.[3] Process by-products are elemental sulfur, gypsum from wastewater treatment, and a mixture of ferric and ferrous sulfate, with the latter presenting a disposal problem.

LEDGEMONT PROCESS

The Ledgemont oxygen leaching process is based on the aqueous oxidation of pyritic sulfur in coal at moderately high temperatures and pressures. Figure 23 represents the process flow scheme. The process has been shown to remove more than 90 percent of the pyritic sulfur in coals of widely differing ranks, including lignite, bituminous coals, and anthracite, in bench-scale tests. However, little, if any, organic sulfur is removed by the process. The process became inactive in 1975 during divestiture of Peabody Coal Company by Kennecott Copper Co.[4] Although not as well developed as the Meyers process, the Ledgemont process is judged to be competitive in cost and sulfur removal effectiveness. The principal engineering problem in this process is the presence of corrosive dilute sulfuric acid, which may pose difficulties in construction material selection and in equipment for pressure letdown. The process also has a potential environmental problem associated with the disposal of lime-gypsum-ferric hydroxide sludge which may contain hazardous trace metals.

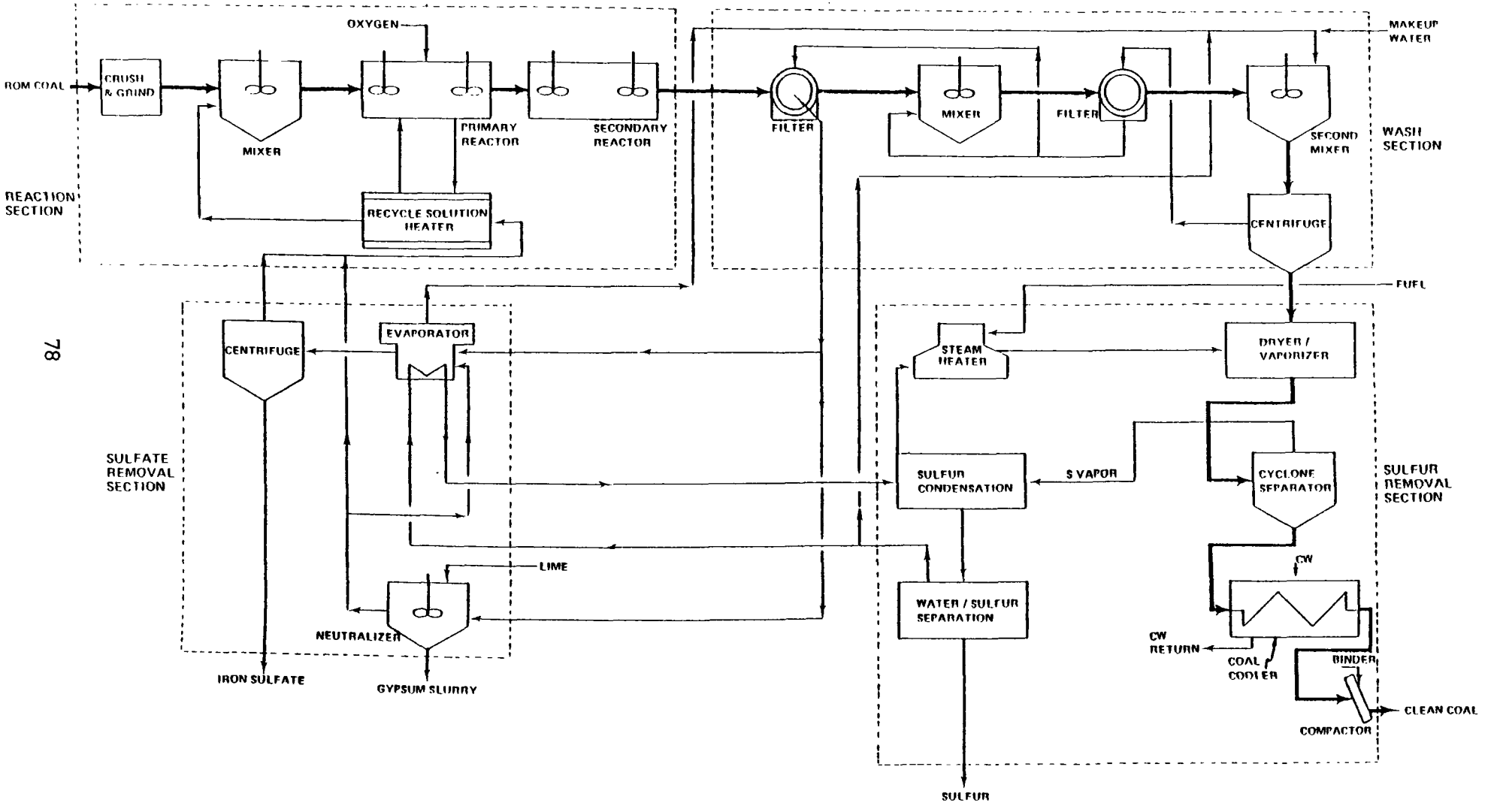

FIGURE 22 PROCESS FLOWSHEET FOR THE (MEYERS') PROCESS

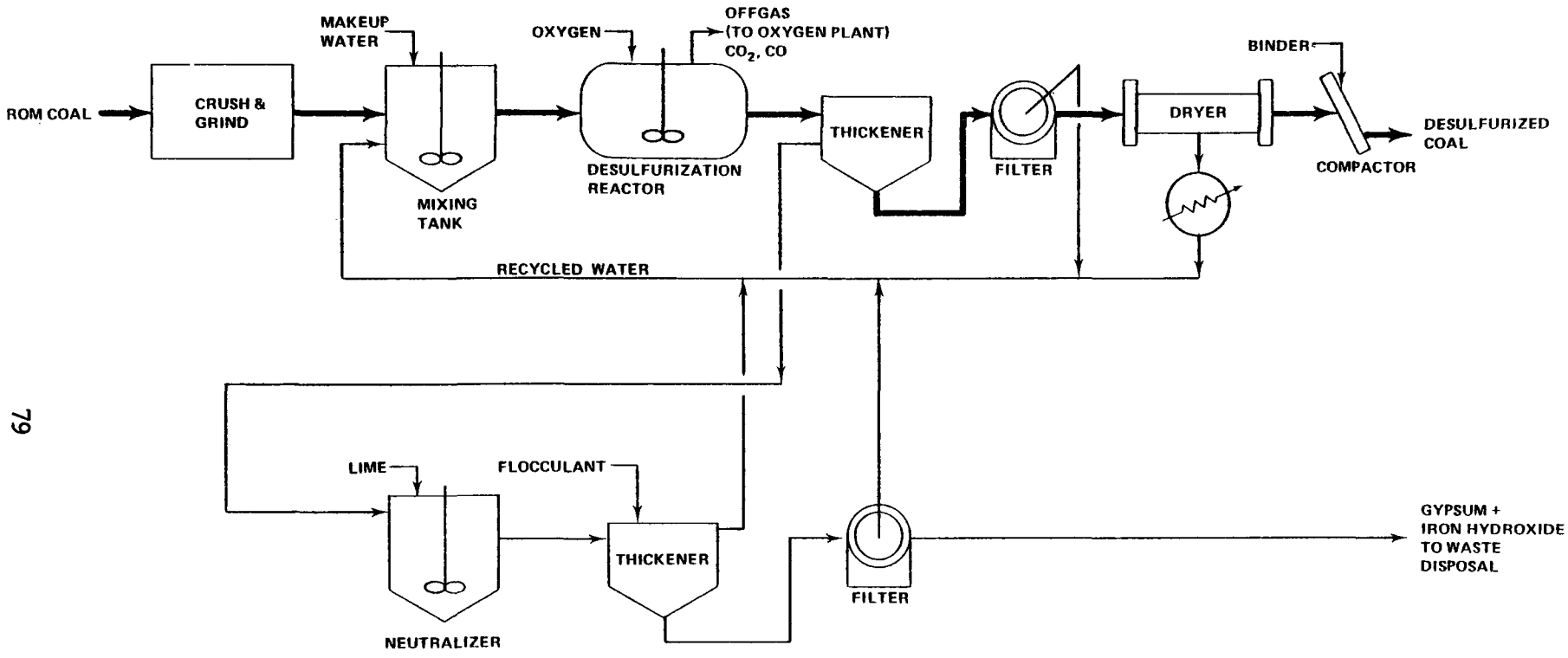

FIGURE 23 LEDGEMONT OXYGEN LEACHING PROCESS FLOW SHEET

ERDA PROCESS

A conceptualized flow sheet for the ERDA air and steam leaching process is shown in Figure 24.[5] The process is similar to the Ledgemont oxygen/water process except that it employs higher temperature and pressure to effect the removal of organic sulfur and uses air instead of oxygen. This process can remove more than 90 percent of the pyritic sulfur and up to about 40 percent of organic sulfur from finely crushed coals (minus 200 mesh). Coals tested on a laboratory scale include Appalachian, Eastern Interior and Western. The developer's claim is that using this process, an estimated 45 percent of the mines in the eastern United States could produce environmentally acceptable boiler fuel in accordance with current EPA standards for new utility installations. Effort to date is on a bench scale, but a mini-pilot plant is expected to start up soon. The problems associated with this process are engineering in nature. The major one is associated with the selection of materials for the unit construction. Severe corrosion problems can be expected as the process generates dilute sulfuric acid which is highly corrosive at the operating temperatures and pressures.

G.E. PROCESS

A conceptualized flow sheet for the General Electric chemical coal cleaning process is shown in Figure 25. Ground coal (40 to 100 mesh) is wetted with sodium hydroxide solution and subjected to brief (~30 sec.) irradiation with microwave energy in an inert atmosphere. After two such treatments, as much as 75-90 percent of the total sulfur is converted to sodium sulfide or polysulfide which can be removed by washing.[6] No significant coal degradation occurs. That portion of the process which recovers the sulfur values and regenerates the NaOH is not proven. Work to date has been with 100 gram coal samples, but scale-up to 1 kg quantities is presently in progress. The process appears to attack both pyritic and organic sulfur, possibly at about the same rate. Appalachian and Eastern Interior coals having wide ranges of organic and pyritic sulfur contents have been tested with about equivalent success.

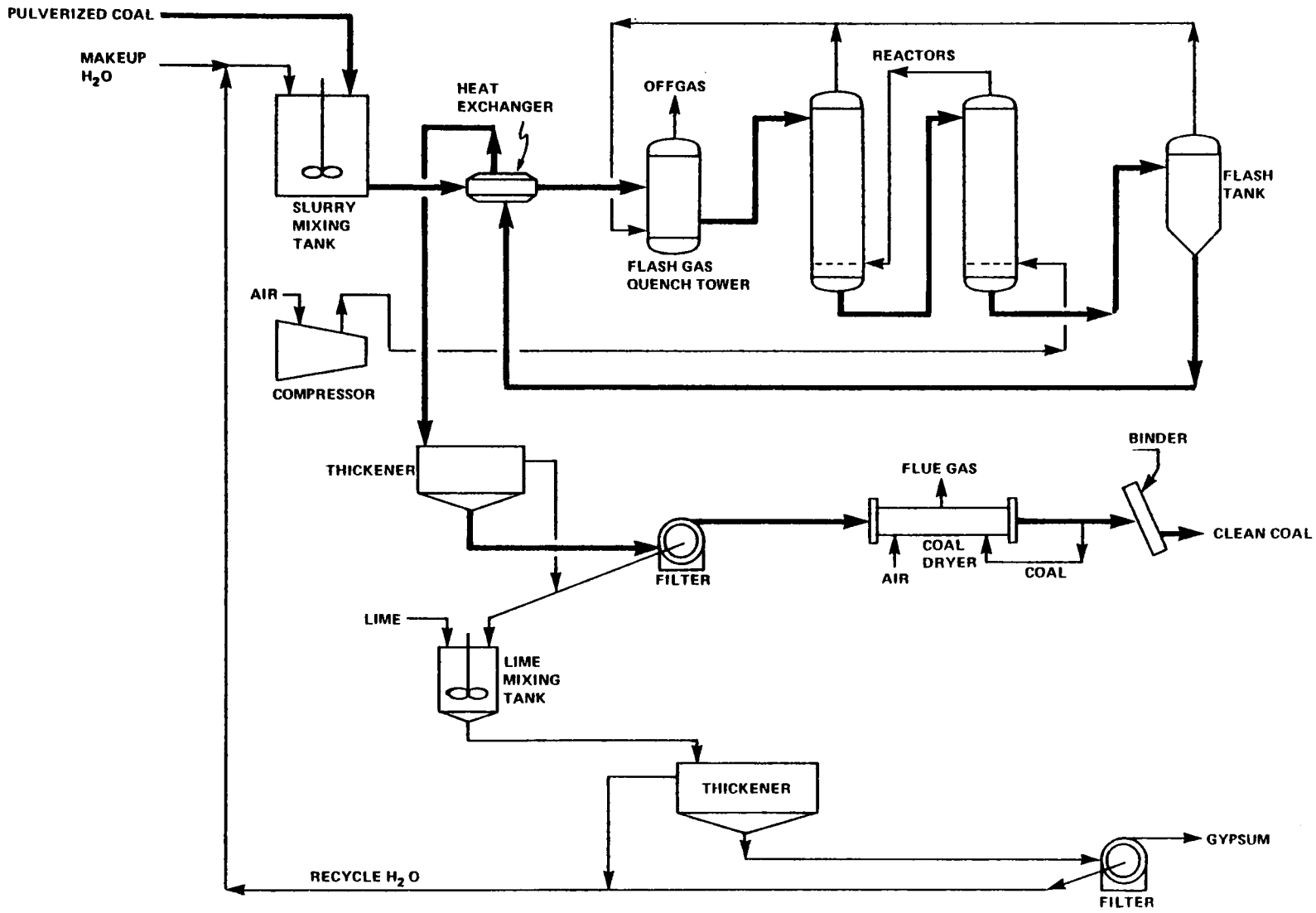

FIGURE 24 ERDA PROCESS FLOW SHEET

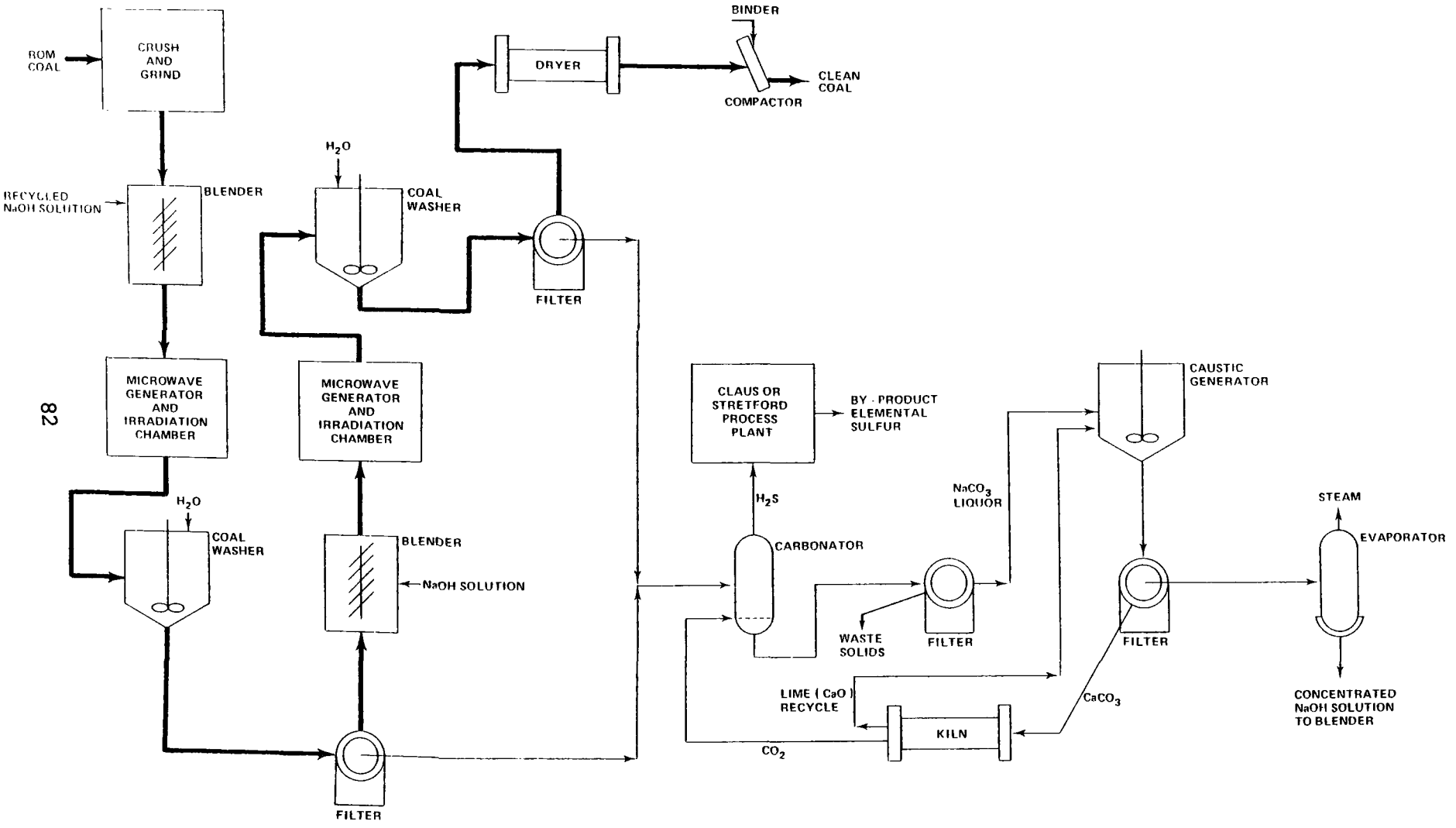

FIGURE 25 GENERAL ELECTRIC MICROWAVE PROCESS FLOW SHEET

BATTELLE PROCESS

Figure 26 is a flow diagram for the Battelle Hydrothermal process. In this process, 70 percent minus 200 mesh coal is treated with aqueous sodium and calcium hydroxides at elevated temperatures and pressures, which removes nearly all pyritic sulfur and 25-50 percent of organic sulfur.[7] Test work on a bench and pre-pilot level on Appalachian and Eastern Interior coals has resulted in products which meet current EPA NSPS for sulfur dioxide emissions. The conceptualized process, using lime-carbon dioxide regeneration of the spent leachant, removes sulfur as hydrogen sulfides which is converted to elemental sulfur using a Stretford process. In addition to being a costly process, there are two major technical problems:

- The feasibility of the closed-loop caustic regeneration feature in a continuous process is as yet undemonstrated; and
- The products may contain excessive sodium residues, causing low melting slags and making the coal unusable in conventional dry-bottom furnaces.

JPL PROCESS

Figure 27 shows a conceptualized process flow scheme for the JPL process. This process uses chlorine gas as an oxidizing agent in a trichloroethane solution to convert both pyritic and organic forms of sulfur in coal to sulfuric acid. Since removal of sulfur can approach the 75 percent level, without significant loss of coal or energy content, products should generally meet current EPA NSPS for sulfur dioxide emissions.[8] To date the process has been tested on two Eastern Interior coals on a laboratory scale only, however, the effort will progress to bench-scale and pre-pilot plant scale in the near future. The project is currently supported by the Bureau of Mines.

There are some potential environmental problems with the process. The trichloroethane solvent is listed by EPA as a priority pollutant in terms of environmental effects. A major conceptual problem in the design of the process is the need to recycle by-product hydrochloric acid for conversion to chlorine. At a chlorine consumption rate of 250 kg per metric ton of coal, the incorporation of a Kel-Chlor unit in the JPL system will add approximately $10/metric ton of coal. This may be a difficult economic problem for the

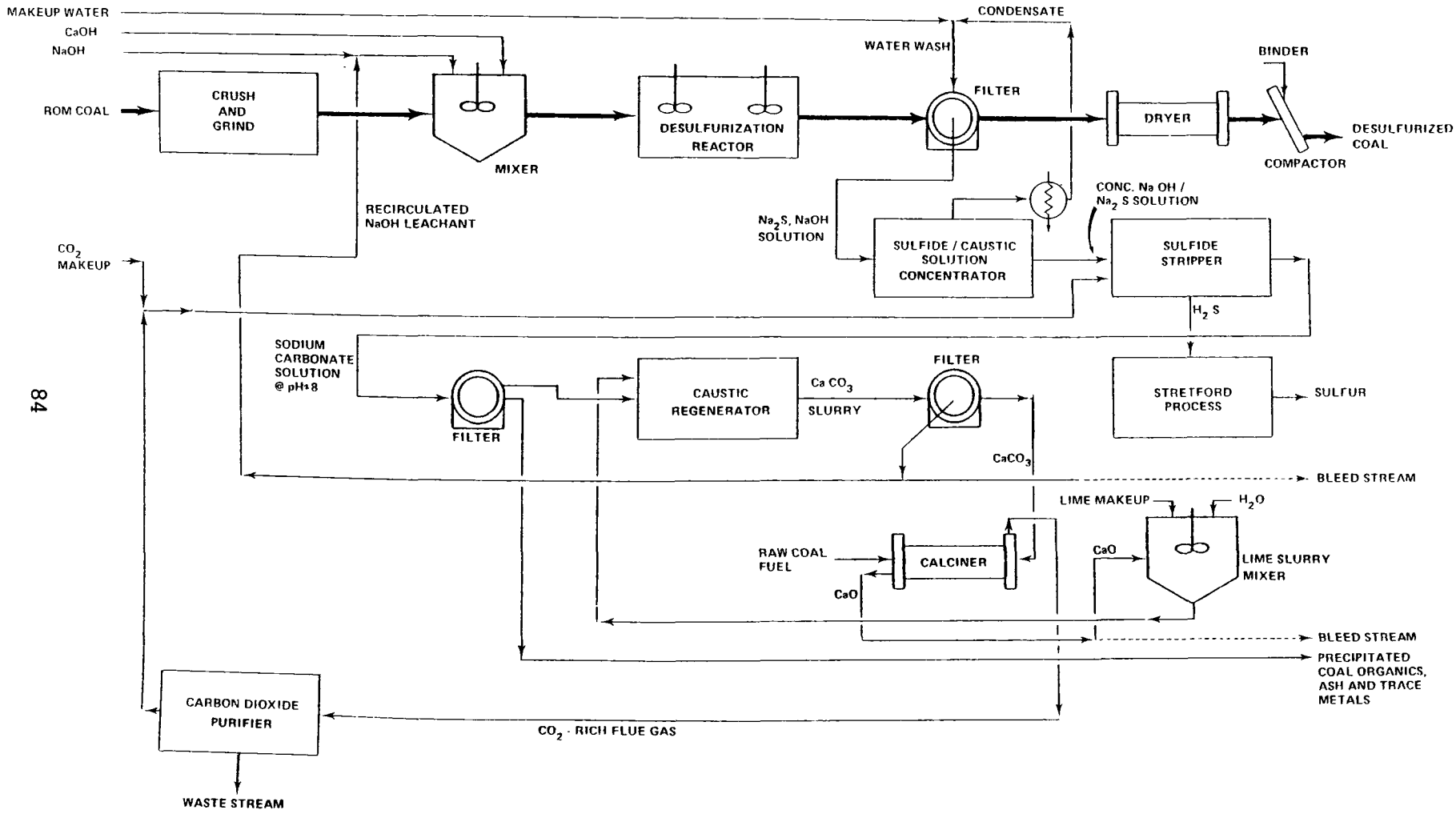

FIGURE 26 BATTELLE HYDROTHERMAL PROCESS FLOW SHEET

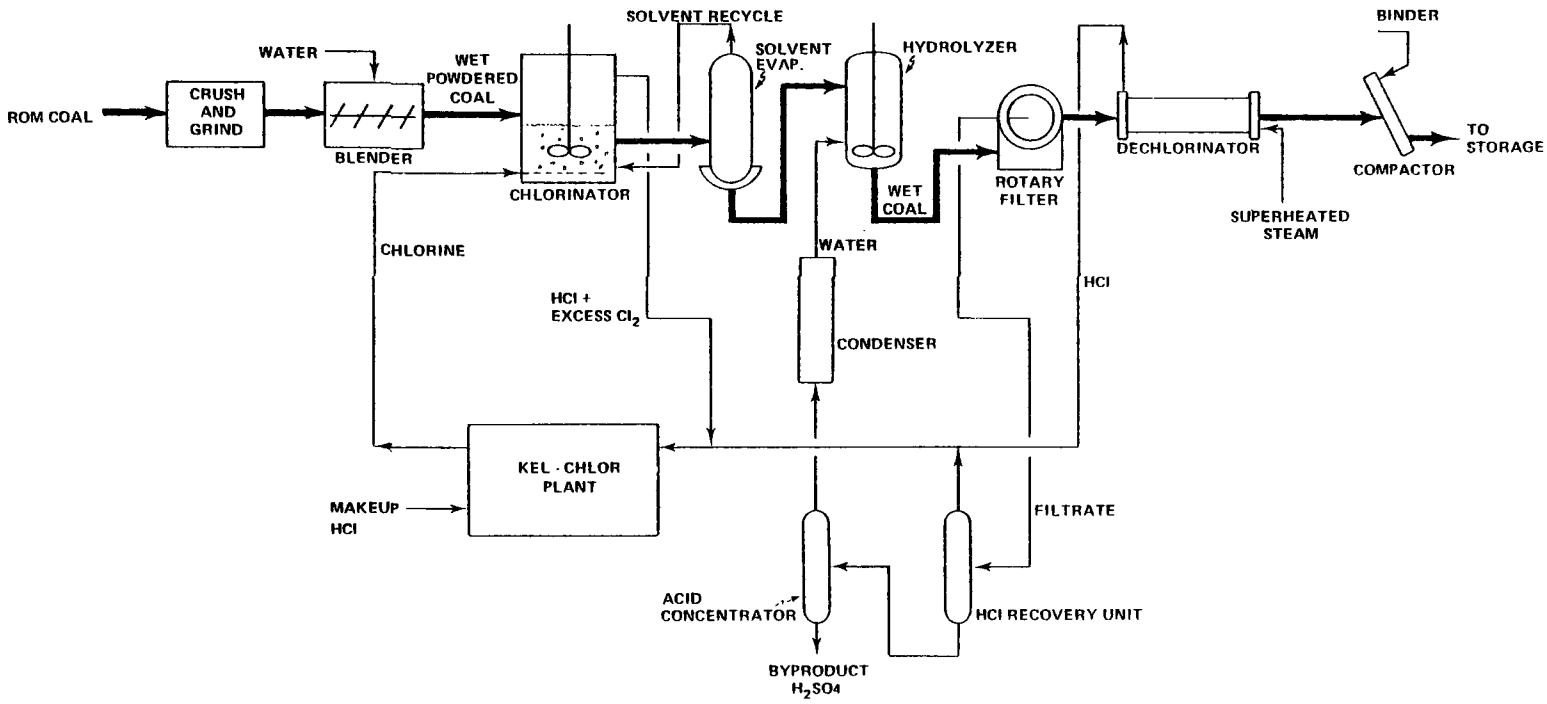

FIGURE 27 JPL PROCESS FLOW SHEET

JPL process to surmount.

IGT PROCESS

The IGT conceptualized process is represented by the flow sheet shown as Figure 28. This process employs essentially atmospheric pressure and high temperatures [about 400°C (750°F) for pretreatment and 815°C (1,500°F) for hydrodesulfurization] to accomplish desulfurization of coal. These high temperatures cause considerable coal loss due to oxidation, hydrocarbon volatilization and coal gasification, with subsequent loss of heating value. Experimental results have indicated an average energy recovery potential of 60 percent for this process. The treated product is essentially a carbon char with 80-90 percent of total sulfur removed. Most of the experimental work to date has been accomplished with four selected bituminous coals with a size of plus 40 mesh. Present effort is on a bench-scale level. The net energy recovery potential of the system and the change in the coal matrix by the process have been identified as possible severe problems for the IGT process. The process must be developed to a stage where the process off-gas can be satisfactorily utilized for its energy and hydrogen content. If this cannot be technically and economically accomplished, the process will prove to be inefficient and too costly for commercialization.

KVB PROCESS

A conceptualized process flow diagram for the KVB process is shown in Figure 29. This process is based upon selective oxidation of the sulfur constituents of the coal. In this process, dry coarsely ground coal (28 mesh) is heated to 120°C (250°F) in the presence of nitrogen oxide gases at a pressure of 2.4 atm. (35 psia) for the removal of a portion of the coal sulfur as gaseous sulfur dioxide. Residence time is about 1/2 to 1 hour. Any remaining reacted, non-gaseous sulfur compounds in the treated coal are removed by water or caustic washing. The process has progressed through the laboratory scale, but is currently not active for lack of support. Laboratory experiments with five different bituminous coals indicate that the process has desulfurization potential of up to 63 percent of sulfur with basic dry oxidation plus water washing treatment and up to 89 percent with dry oxidation followed by caustic and water washing.[9] The washing steps also reduce the ash content of the coal.

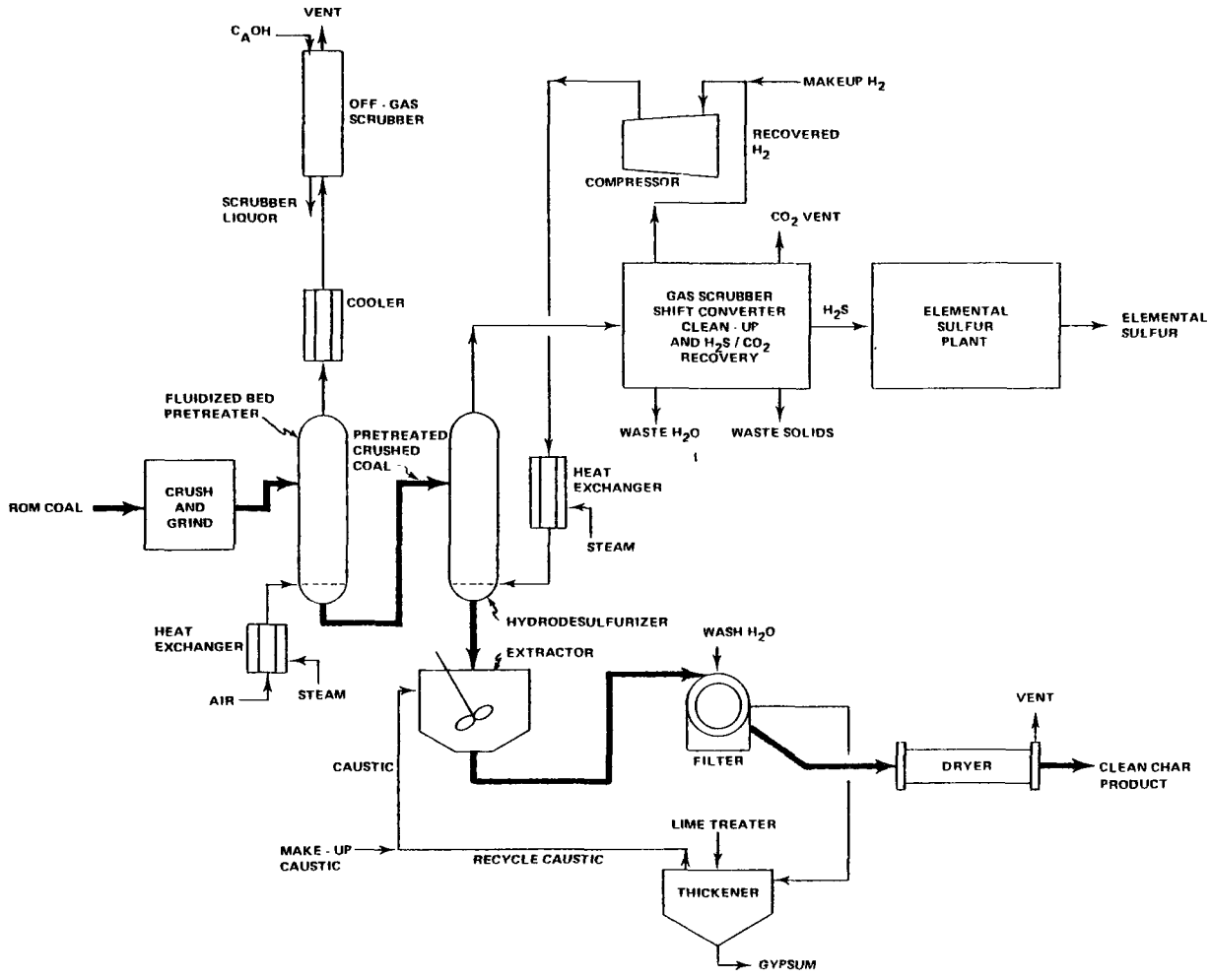

FIGURE 28 IGT PROCESS FLOW SHEET

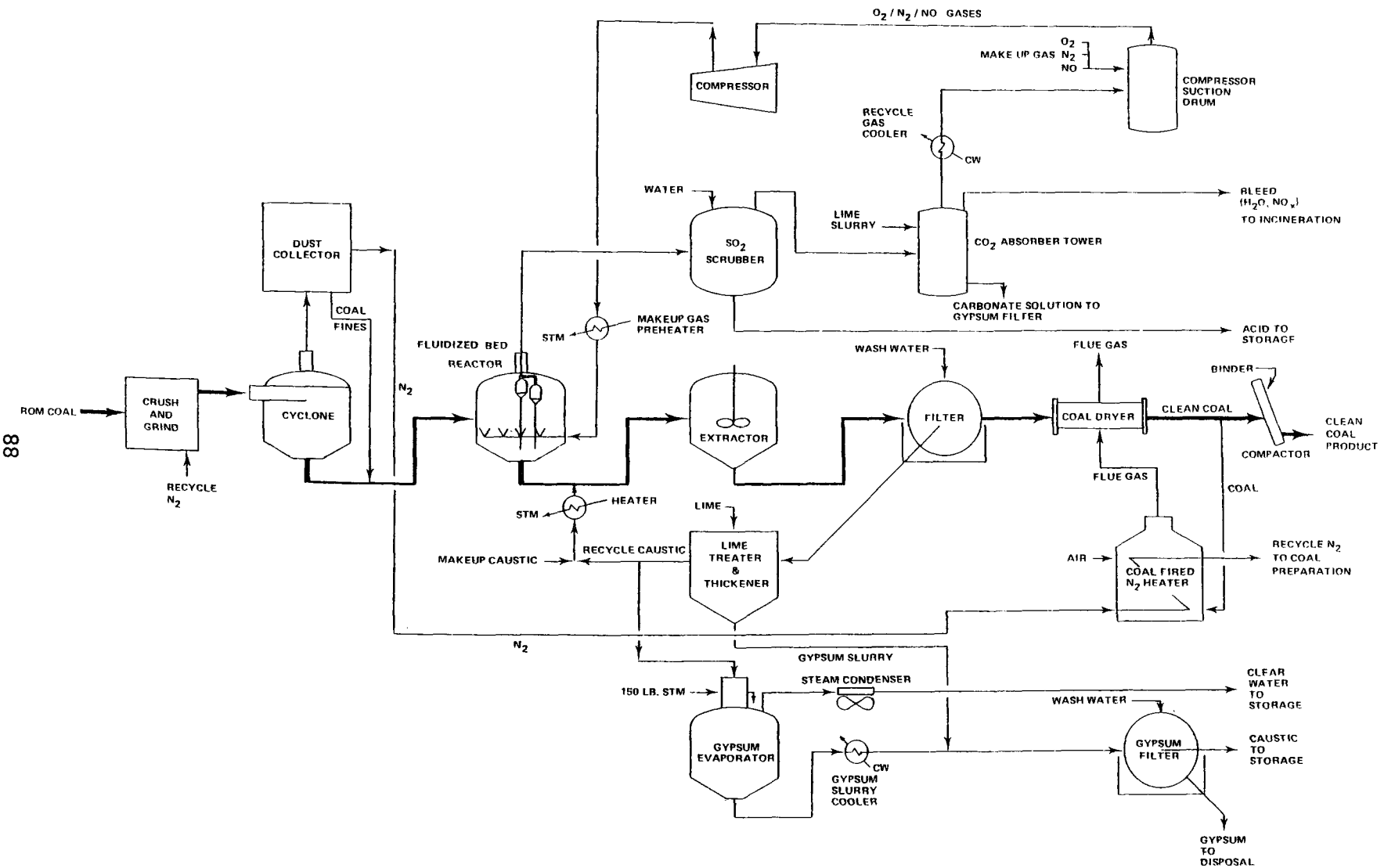

FIGURE 29 KVB PROCESS FLOW SHEET

In cases where dry oxidation alone could remove sufficient sulfur to meet the sulfur dioxide emission standards, this technology may provide a very simple and inexpensive system. Potential problem areas for this system are:

- oxygen concentration requirements in the treat gas exceed the explosion limits for coal dust, and thus the application of this process may be hazardous.
- nitrogen uptake by the coal structure may increase NO_x emission.

SUMMARY OF MINOR AND MISCELLANEOUS PROCESSES

Tables 7 and 8 summarize process information on the minor and miscellaneous chemical coal cleaning processes.

TABLE 7. PROCESS INFORMATION SUMMARY OF MINOR CHEMICAL COAL CLEANING PROCESSES

Process	Method	Type S Removed	Stage of Development	Problems, Comments	Economics
Colo. Sch. of Mines Res. Inst.	Selective ferrofluid wetting of pulverized coal constituents followed by magnetic separation	Pyritic	Starting lab work	EPRI funded	No data
Jolevil	Unknown	Unknown	Allegedly active & being marketed	Unknown	Unknown
U. of Houston	Hydrothermal alkaline leaching	Pyritic & some organic	Lab scale	Alleges improvement on Battelle process. Internally funded	No data
Ohio State U.	Microbiological oxidation	Pyritic	Lab scale	7+ day process. Internally funded	No data
NRC (Canada)	Oil agglomeration of very fine coal particles leaving rejected pyrites in water slurry	Pyritic	Active	May be especially applicable in recovery of fines	$2/ton applied to fines recovery
	Microbiological oxidation of pyrite particles to increase hydrophobic properties	Pyritic	Active on lab scale	May make oil agglomeration more efficient	---
W. Ill. U.	Hydrosulfurization in plasma arc	Both	Active, at low level	Seeking funding	No data
Texaco	H_2O_2 oxidation during pipeline transport	Pyritic	Inactive	---	No data

TABLE 7. (continued)

Process	Method	Type S Removed	Stage of Development	Problems, Comments	Economics
U. of Fla.	Gas oxidation/ reduction at very high temperature	Both	Inactive	Poor yield; no data since 1975	No data
Methonics, Inc.	Wet hydrogenation	Both	Inactive	Company probably no longer exists	No data
Rare Earth Industries	Rare earths recycled as S-getters during SRC liquefaction	Both	Inactive	Company probably no longer exists	No data
MIT	Catalytic desulfurization of petroleum fractions	Not Given	Active	Not applicable to coals	No data
Gulf & Western	Coal liquefaction via graft polymerization	Not Given	Inactive	Changes coal matrix. Prior ERDA funding now discontinued	No data
New South Wales	H_2O_2 oxidation	Not Given	Discontinued	Method is analytical, not meant to be coal cleaning	No data

TABLE 8. PROCESS INFORMATION SUMMARY OF MISCELLANEOUS CHEMICAL COAL CLEANING PROCESSES

Process	Method	Type S Removed	Stage of Development	Problems, Comments	Economics
U.S. Steel	Fused NaOH @ high temperature	Both	Inactive	Excess Na in product; coal matrix affected	No data
Chemico	Wet oxidation using air @ high temperature and pressure	Both	Inactive	---	No data
ERDA (Laramie)	Leaching using H_2SO_4 or $H_2SO_4+H_2O_2$	Pyritic	Inactive-prev. on lab basis only	Inactive since 1975	No data
Rutgers	Microbiological oxidation of organic S	Organic	Inactive	Recently discontinued; negative results	No data
Dynatech	Microbiological oxidation	Pyritic	Inactive	Inactive	~$4/ton (company data)
Kyoto Univ. (Japan)	Cl_2/O_2 wet oxidation	Probably both	Unknown	No answer to our letter of inquiry	No data
Kellogg	High temperature and pressure leaching in KOH solution w/Fe_2O_3 catalyst	Both	Discontinued	Poor yield; coal matrix altered	No data

PROCESS AND COST COMPARISON

This section presents a comparison of technical and economic results obtained from the assessment of major chemical coal cleaning processes as described and discussed previously. The analysis and conclusions presented herein are based on process claims made by individual developers, research reports and published information.

Most processes described in this report are not at an adequate developmental stage to permit the preparation of a precise engineering process flow sheet for capital and operating cost evaluation. Thus, the process economics presented for most processes are best engineering estimates, based upon the information available.

Sulfur Removal and Energy Recovery Potential

A comparison of process performance and costs can best be accomplished by looking at each process on a common coal feed. This basis allows the comparison of the following parameters process by process:

- Weight yield of clean coal product based upon a feed coal rate (moisture free basis) of 7,110 metric tons (7,840 tons) per day [7,200 metric tons (8,000 tons) per day of 2 percent moisture coal];
- Weight percent sulfur in the clean coal product based upon the sulfur removal efficiency of the process;
- Heating value yield of the process based upon a feed coal value of 6,800 kg cal/kg (12,300 BTU/lb) and net energy recovery in percent; and
- Costs
  - total capital costs for the process,
  - total annual processing costs,
  - annual costs per metric ton of clean coal, including coal costs and excluding coal costs, and
  - annual costs per heating value unit, including coal costs and excluding coal costs.

This comparison data is shown in Table 9, arranged according to categories of processes.

The common coal feed selected is a bituminous coal from the Pittsburgh seam, which cannot readily be cleaned by conventional washing techniques to meet the current new source performance standards for sulfur dioxide emission. This coal does have an organic sulfur content low enough (0.7 weight percent) so that complete removal of pyritic sulfur would result in a product which will meet current NSPS for sulfur dioxide emission.

The percent removal of pyritic and organic sulfur assigned to each process is based on data supplied by individual developers. The table indicates a range of SO_2 emission levels for the clean coal products of 1.5 to 3.8 kg/10^6 kg cal (0.8 to 2.1 lb/10^6 BTU). The calculated SO_2 levels for processes which remove both types of sulfur are lower than the 2.2 kg/10^6 kg cal (1.2 lb/10^6 BTU) NSPS for sulfur dioxide emission. Of the four processes which remove pyritic sulfur only, two (TRW and Ledgemont) will produce slightly higher sulfur levels than that required to meet the current NSPS; however, within the levels of accuracies involved they also might be considered to be in compliance. The remaining two processes [Magnex SM and Syracuse] would produce coal which would be in compliance only with a standard of 4.3 kg/10^6 kg cal (2.4 lb/10^6 BTU) for sulfur dioxide emission.

Processes which remove pyritic sulfur alone are primarily applicable to coals rich in pyritic sulfur, so that efficient removal of pyritic sulfur could bring these coals into compliance. Processes which remove both types of sulfur are primarily applicable to coals which cannot be adequately treated by pyritic removal processes. All chemical coal cleaning processes are more selective and efficient than conventional coal cleaning techniques and it is possible that each process may eventually find an area of application.

As shown in Table 9, the energy recoveries estimated for these processes are generally greater than 90 percent with a range from a low 57 percent for the IGT process to a high of 96 percent for the GE process. All energy recoveries listed in Table 9 reflect both the coal loss due to processing and the coal used to provide in-process heating needs. However, with the exception of the IGT process, the actual coal loss due to processing is claimed to be small. For most processes, the major heating value loss is due to the use of clean coal for in-process heating.

TABLE 9. PROCESS PERFORMANCE AND COST COMPARISON FOR MAJOR CHEMICAL COAL CLEANING PROCESSES

		Processes Which Remove Pyritic Sulfur Only				Processes which Remove Pyritic and Organic Sulfur						
	Feed†	TRW	LOL	Magnex (SM)	Syracuse + physical cleaning	ERDA	GE	Battelle	JPL	IGT	KVB	AMCO[V]
Net coal yield, metric tons per day (tons/day) *	7,110 (7,840)	6,400 (7,056)	6,400 (7,056)	5,645 (6,225)	5,688 (6,272)	6,400 (7,056)	6,826 (7,526)	6,755 (7,448)	6,470 (7,135)	4,270 (4,704)	6,070 (6,690)	6,400 (7,056)
Weight % sulfur in the product	1.93	0.83	0.83	0.97	1.50	0.65	0.50	0.65	0.6	0.55	0.61	0.69
Heating value, kg cal/kg (BTU/lb)	6,800 (12,300)	7,100 (12,835)	7,100 (12,835)	6,900 (12,400)	8,100 (14,600)	7,100 (12,835)	6,800 (12,300)	6,300 (11,350)	6,800 (12,300)	6,500 (11,685)	7,300 (13,120)	6,900 (12,400)
kg SO_2/MM kg cal (lb SO_2/MM BTU)	5.6 (3.1)	2.3(1.3)	2.3(1.3)	2.8(1.6)	3.8(2.1)	1.6(0.9)	1.5(0.8)	2.2(1.2)	1.8(1.0)	1.6(0.9)	1.6(0.9)	2.0(1.1)
Percent net BTU yield	—	94	94	80	95	94	96	88	91	57	91	91
Costs												
Capital ($MM)	—	109	114.0	37.4	50.4	166.8	102.0	168.1	103.0	135	65.5	—
Annual processing ($MM)	—	37.2	45.3	15.1	16.6	56.6	35.9	74.8	44.2	38.0	39.6	58.7
$/annual metric ton ($/annual ton) of clean coal, excluding coal cost	—	17.2 (15.6)	21.0 (19.0)	7.9 (7.2)	8.7 (7.9)	26.3 (23.8)	15.6 (14.2)	32.9 (29.8)	20.3 18.4	26.5 (24.1)	19.4 (17.6)	27.5 (25)
$/annual metric ton ($/annual ton) of clean coal, including coal cost[Δ]	—	47.9 (43.4)	51.6 (46.9)	42.7 (38.7)	43.1 (39.1)	56.9 (51.6)	44.3 (40.2)	61.9 (56.1)	50.6 (45.9)	72.5 (65.7)	51.7 (46.9)	—
$/MM kg cal ($/MM BTU), excluding coal cost	—	2.42 (0.61)	2.94 (0.74)	1.15 (0.29)	1.07 (0.27)	3.63 (0.92)	2.30 (0.58)	5.19 (1.31)	2.97 (0.75)	4.09 (1.03)	2.66 (0.67)	—
$/MM kg cal ($/MM BTU), including coal cost[Δ]	—	6.71 (1.69)	7.23 (1.82)	6.20 (1.56)	5.32 (1.34)	7.98 (2.00)	6.49 (1.63)	9.78 (2.46)	7.40 (1.86)	11.2 (2.81)	7.09 (1.79)	—

* All values reported are on a moisture free basis.
† The coal selected is a Pittsburgh seam coal from Pennsylvania which contains 1.22 weight percent pyritic, 0.01 percent sulfate and 0.70 percent organic sulfur. It is assumed that this coal has a heating value of 6,800 kgcal/kg (12,300 BTU/lb).
Δ Assumes coal feed @ $27.6/metric ton ($25/ton).
V Estimates

It is believed that the high yield estimated for the GE process may not adequately reflect the heat requirements that may be needed to regenerate the caustic reagent employed in the process. This process is in its early stage of development and as such, the energy requirements for the process cannot be properly assessed at this time. It is possible, that in the final analysis, the heating value recovery from this process will be more in line with other chemical coal cleaning processes.

Cost Comparison for Major Chemical Coal Cleaning Processes

Estimates of capital and annual operating costs for each major chemical coal cleaning process are also given in Table 9. These estimates are based on an assumed plant feed capacity of 7,200 metric tons (8,000 tons) per day, equivalent to the coal need to fuel a 750 M.W. electric power plant. The total annual operating costs for each process, including and excluding cost of the raw coal, have been expressed also in terms of dollars per metric ton and dollars per million kg cal heat content in the coal.

The capital cost estimate prepared by each process developer was used as the basis of the cost estimates in this report. In some cases, these costs were modified to allow the evaluation of the various processes on a comparable basis. The estimated capital costs assume a grass roots operation including costs for coal crushing, grinding, product compacting and feed and product handling. The capital costs also include land acquisition and site development, off-site facilities, and engineering and design costs. A contingency allowance of 20 percent has been included in all estimates, with the exception of TRW's. A lower contingency allowance (10 percent) was used for the TRW process since it is at a more advanced stage of development and adequate process data is available to develop the economics of this process with a greater degree of confidence.

Annual operating costs are based on a 24-hour workday, 90.4 percent service factor (330 days per year) basis. The capital cost is amortized over a period of 20 years at 10 percent interest per year. Where adequate information was available, the utilities and chemical consumptions are based upon actual process demand. The operating labor costs reflect wage rates for the Pittsburgh, Pennsylvania, area. The estimates for the maintenance

and supplies, general and administrative, taxes and insurance are taken as 5, 1.5, 2 and 1 percent on total installed plant capital cost (TPC), respectively.

Capital Cost Comparisons--

In general, pyritic sulfur removal processes require the least amount of capital investment. However, these processes have limited sulfur removal efficiencies.

Among processes that remove both organic and pyritic sulfur, the KVB process appears to have the lowest capital investment, since it is a partially dry process requiring lower investment for the dry reaction section. The high capital cost of the Battelle process is due to the processing steps associated with reagent regeneration.

The high capital cost of the ERDA process is due to costly equipment associated with the handling of dilute sulfuric acid at elevated temperatures and pressures. At the process operating conditions the dilute acid is highly corrosive and it poses problems in terms of selection of construction material for equipment and devices which are exposed to the corrosive atmosphere.

Very little is known about the ARCO process details and process chemistry. Therefore, a capital cost estimate was not developed for that process.

Operating Cost Comparisons--

Table 10 presents a summary of operating cost elements for each process. The ranges of annual operating costs, including raw coal cost, in terms of \$/metric ton and \$/10^6 kg cal are \$43.10 to \$72.50 and \$5.32 to \$11.20, respectively. Pyritic sulfur removal processes using chemical pretreatment are the least expensive of all processes listed in Table 10. Operating cost for the Magnex process depends primarily on the cost of iron pentacarbonyl manufacturing. In the estimate presented in Table 9, an operating cost of \$0.22/kg for the iron carbonyl manufacturing was used, as projected by the developer. At a consumption rate of 10 kg/metric ton of coal,

TABLE 10. OPERATING COST COMPARISONS FOR MAJOR CHEMICAL COAL CLEANING PROCESSES

COST ELEMENT	MEYERS PROCESS		LEDGEMONT PROCESS		MAGNEX (SM) PROCESS		SYRACUSE PROCESS		EDA PROCESS		G.E. PROCESS		BATTELLE PROCESS		JPL PROCESS		IGT PROCESS		KVB PROCESS	
	COST ($1000)	$/TON PRODUCT	COST ($1000)	$/TON PRODUCT	COST ($1000)	$/TON PRODUCT	COST ($1000)	$/TON PRODUCT	COST ($1000)	$/TON PRODUCT	COST ($1000)	$/TON PRODUCT	COST ($1000)	$/TON PRODUCT	COST ($1000)	$/TON PRODUCT	COST ($1000)	$/TON PRODUCT	COST ($1000)	$/TON PRODUCT
LABOR & G.&A.	3,962	1.67	1,600	0.67	765	0.36	620	0.31	3,255	1.36	1,830	0.72	5,391	2.15	3,700	1.54	4,925	3.11	1,423	0.63
AMORTIZATION (20 YRS)	12,820	5.39	13,400	5.64	4,274	2.04	5,919	2.80	19,600	8.25	11,900	4.73	19,700	7.85	6,900	2.87	15,800	9.97	7,701	3.42
TAXES & INSURANCE	3,270	1.38	3,400	1.44	1,092	0.52	1,512	0.72	5,004	2.11	3,790	1.49	5,000	1.99	1,310	0.55	4,050	2.57	1,966	0.87
MAINTENANCE & SUPPLIES	5,460	2.29	7,300	3.07	1,819	0.87	3,335	1.58	8,340	3.51	5,310	2.10	10,000	3.99	2,300	0.96	6,732	4.25	3,277	1.46
UTILITIES	5,764	2.43	10,600	4.46	1,400	0.67	1,040	0.49	13,224	5.57	7,170	2.82	23,100	9.21	1,400	0.58	3,300	2.08	17,271	7.67
CHEMICALS	4,692	1.97	8,200	3.45	5,333	2.54	4,220	1.99	6,932	2.92	5,860	2.31	11,609	4.63	28,600	11.90	3,300	2.08	7,054	3.49
WASTE DISPOSAL	1,275	0.54	800	0.34	438	0.21	-	-	240	0.10	-	-	-	-	-	-	-	-	132	0.06
ANNUAL PROCESSING COST	37,243	15.67	45,300	19.07	15,121	7.21	16,646	7.09	56,595	23.82	35,900	14.17	74,800	29.82	44,200	18.40	38,107	24.06	39,624	17.60
RAW COAL	66,000	27.78	66,000	27.78	66,000	31.49	66,000	31.25	66,000	27.78	66,000	26.05	66,000	26.32	66,000	27.47	66,000	41.66	66,000	29.31
TOTAL ANNUAL COST	103,243	43.45	111,300	46.85	81,121	38.70	82,646	39.14	122,595	51.60	101,900	40.22	140,800	56.14	110,200	45.87	104,107	65.72	105,624	46.90

each $0.20 cost increase per kilogram of iron carbonyl manufactured would increase the annual operating cost of this process by about 27 percent.

Between the two processes which remove pyritic sulfur by leaching, the TRW process appears to be slightly less costly. In the Ledgemont process the fixed charges associated with the higher capital investment have an adverse impact on the annual operating costs. Additionally, the TRW process has a much higher probability of technical success since it is currently active at a Process Development Unit stage. The Ledgemont process, tested only at a mini-pilot plant level, is currently inactive.

The most expensive processes, in terms of energy output, are the IGT process followed closely by the Battelle process. Laboratory data available at this time, indicate a very low BTU recovery for the IGT process. The Battelle process is adversely impacted by the fixed charges associated with the high capital investment and by the costs associated with chemicals consumption and reagent regeneration operations.

The least expensive process capable of removing pyritic and organic sulfur is the GE process followed closely by the JPL and KVB processes. The GE estimate is based, however, on early laboratory data and it is quite possible that the projected costs will prove somewhat inaccurate in the long run. The basic process utilizes a caustic reagent in coal pretreatment and the costs associated with caustic consumption and caustic regeneration are questionable at this time. The JPL process estimates are also preliminary since investigations on this process have been initiated recently. More definitive cost information on this process will be available in 1978 when more process information and accurate material and heat balance information becomes available. The annual costs reported for the KVB process are also preliminary since the process is at its early stages of development and accurate conceptualization of the process for purposes of economic evaluation is not possible at this time. The main advantage of the KVB process is the simplicity of the first stage dry oxidation process. If the dry oxidation process can be successfully demonstrated using coarse coals, this process would be an inexpensive technology for

beneficiation of coals where partial removal of sulfur would substantially upgrade the coal.

Among the processes capable of removing pyritic and organic sulfur the ERDA process has one of the highest probabilities of technical success. The process is currently active and most technologies employed in this system have been already tested in other systems such as Ledgemont and TRW. The process is attractive because it is claimed to remove both types of sulfur and uses air as a major reagent. Furthermore, the sulfur by-product from this process is claimed to be dilute sulfuric acid, rather than iron sulfate, which greatly simplifies the coal washing operations. The process is somewhat expensive due to high operating temperature and pressure requirements and the corrosive nature of dilute acid present in this system. The dilute sulfuric acid at the operating conditions of the ERDA process will require the use of expensive construction material and consequently a higher capital investment cost.

Table 11 presents a cost effectiveness summary derived from information presented in Table 9. Costs are presented in terms of dollars per percent of sulfur removed from coal regardless of the quality of the treated product. However, column 7 of the table shows whether the product would comply with the current EPA's NSPS for SO_2 emissions. The processes are then rated based upon the cost effectiveness of sulfur removal. The subjective probability of success assigned to each process shown in column 8 of this table is based on integration of several factors such as:

- available experimental data;
- our understanding of the status; of the process;
- known product quality deficiencies;
- known process problems; and
- the degree and quality of effort assigned to the individual program.

In conclusion, all chemical coal cleaning processes discussed in this section offer a possibility of converting coal into clean fuel. Each process has an area of application. However, all of these processes are at their early stages of development. Processes that remove both pyritic and organic sulfur will have a greater impact in coal utilization. If chemical

TABLE 11. COST EFFECTIVENESS AND OTHER COMPARISONS OF CHEMICAL COAL CLEANING PROCESSES*

Process	Type of Sulfur Removed	Percent Sulfur in Product*	Percent Sulfur Removed (%)‡	Process Cost ($/metric ton incl. cost of coal ϕ	Cost Effectiveness of S removal, ($/% S) Removed)	Cost Effectiveness Ranking	Meets EPA NSPS*	Probability of Success (based on available info.)	Time Frame for Commercial Availability (Years)∝
Magnex℠	P[Δ]	.97	0.96	42.7	44.5	2	No	85%	2-3
Syracuse & Physical Cleaning	P	1.50[β]	0.43	43.1	100	4	No	70%	2-3
TRW	P	.83	1.10	47.9	43.5	1	No	90%	5
LOL[∂]	P	.83	1.10	51.6	46.9	3	No	50%	5-8
ERDA	(P&O)[†]	.65	1.28	56.9	44.5	4	Yes	70%	5-8
GE	(P&O)	.50	1.43	44.3	31.0	1	Yes	60%	5-8
Battelle	(P&O)	.65	1.28	61.9	46.5	5	Yes	35%	4-6
JPL	(P&O)	.60	1.33	50.6	38.0	2	Yes	55%	5-8
IGT	(P&O)	.55	1.38	72.5	52.5	6	Yes	20%	5-8
KVB	(P&O)	.68	1.25	51.7	41.4	3	Yes	10%[∂]	5-8
ARCO	(P&O)	.69	1.24	-[Λ]	-[Λ]	-	Yes	-[Λ]	-[Λ]

NOTES:
* Based on Pittsburgh seam coal from Pennsylvania which contains 1.22 weight percent pyritic, 0.01 percent sulfate and 0.70 percent organic sulfur.
Δ P = pyritic sulfur.
† (P&O) = pyritic and organic sulfur.
∝ Time frame assumes continuing effort or renewed effort starting immediately.
Λ Information available is insufficient to make educated guesses.
∂ Processes not currently active, partially accounting for low probability of success.
β 80 percent yield of product assumed in cleaning plant.
‡ Difference between raw coal sulfur and clean coal sulfur

coal cleaning is to be used as an approach for greater utilization of coal as an environmentally acceptable fuel, the pyritic and organic sulfur removal processes should be given the most emphasis and support.

SECTION 4

REFERENCES

1. Kindig, J.K. and R. L. Turner (Hazen Research, Inc.). Dry Chemical Process to Magnetize Pyrite and Ash for Removal from Coal. Preprint.
2. Catalytic, Inc. Chemical Comminution, An Improved Route to Clean Coal. Philadelphia, Pennsylvania. 1977.
3. Hamersma, J.W. and M. L. Kraft. Applicability of the Meyers' Process for Chemical Desulfurization of Coal: Survey of Thirty-Five Coals.
4. Kennecott Chemical Coal Desulfurization Process. In-house report. 1977.
5. Ergun, S., R.R. Oder, L. Kulapaditharom and A. K. Lee (Bechtel Corporation). An Analysis of Chemical Coal Cleaning Processes. Bureau of Mines, U.S. Department of the Interior, Contract No. J0166191 (June 1977).
6. Zavitsanos, P. Coal Desulfurization by Microwave Energy. General Electric Company. Re-entry and Environmental Systems Division. Philadelphia, Pennsylvania 19101. Project References 1 through 9, 1976-1977.
7. Battelle in-house report, July 30, 1976.
8. Ganguli, P.S., G.C. Hsu, G.R. Gavalas, S. H. Kalfayan. Desulfurization of Coal by Chlorinolysis. Vol. 21, No. 7, preprints of papers presented at San Francisco, California. August 29-September 3, 1976.
9. Guth, E.D. and J. M. Robinson. KVB Coal Desulfurization Process. KVB brochure. March 1977.
10. Personal Communications with Electric Power Research Institute.

SECTION 5

CURRENT PROCESS TECHNOLOGY FOR FINE COAL DEWATERING AND DRYING

INTRODUCTION

Current coal mining technology is based on the use of continuous underground mining machines. These machines cut or rip the coal from the face and produce an abundance of small particles. Those particles which will pass through a 1.41 mm (14 mesh) opening are classified as fine coal. Approximately 33% of all coal produced by continuous mining methods is fine coal.

In surface mining the trend to large loading equipment minimizes size degradation, but produces dirty coal due to the admixture of larger quantities of non-coal mineral matter. With ever increasing prices for thermal units and transportation, coal preparation becomes more attractive. Size consist of surface mined coal has a lower content of fine coal and preparation equipment is simpler and less costly. To remove the mineral sulfur (pyrite) effectively, the coal must be crushed to a size sufficiently small to liberate the pyrite crystals. These crystals range in size from 250 mm (10 inches) to sub-micron sizes. The size reduction required to release pyrite may well become the determining factor in establishing the cost effectiveness of using a specific coal to meet a specified sulfur regulation. Beneficiation of fine coal will require the use of coal-water slurries in the preparation plant, with consequent requirement for dewatering and drying.

Water sprays are used to suppress dust in underground mining, and rain and snow add moisture to surface mined coal and coal preparation is almost exclusively accomplished by wet processes. It has been estimated that for each one percent of water in a metric ton of coal, approximately 6,300 kg cal (25,000 BTU/ton) are required to evaporate that moisture. Ancillary problems related to high moisture content are caking, freezing, and increased transport costs.

Moisture reduction also creates hazards, dry fine coal requires special handling techniques to prevent dust pollution and explosions. Technology is currently available for meeting the problems associated with handling dry fine coal.

Mechanical dewatering devices can be divided into two categories:

- those which do not produce a final product--water only cyclones (hydrocyclones) and static thickeners; and
- those which produce a final porduct--screens, centrifuges, spiral classifiers and filters.

Coal driers are of two types:

- direct heat, in which the products of combustion make direct contact with the fine coal; and
- indirect heat, in which the fine coal does not come in contact with the products of combustion.

The following table summarizes the product coal moisture ranges which can be achieved by various dewatering and drying methods on coal which is 9.5 mm x 0 (3/8 in x 0).

Typical Moisture Content of Products by Equipment or Process

Type of Equipment/Process	Discharge Product
Dewatering screens	8 to 20% moisture
Centrifuges	10 to 20% moisture
Filters	20 to 50% moisture
Hydraulic cyclones	40 to 60% solids
Static thickeners	30 to 40% solids
Thermal driers	6 to 7½% moisture
Oil agglomeration processes	8 to 12% moisture

Table 12 shows the feed and product moistures for coal dewatering equipment used on fine coal 0.6 mm x 0 (28 mesh x 0).

The operational and design variables that affect final coal moisture for each of these devices are listed below. In all cases, an optimum solids feed

TABLE 12. FINE COAL DEWATERING AND HANDLING EQUIPMENT

28M x 0

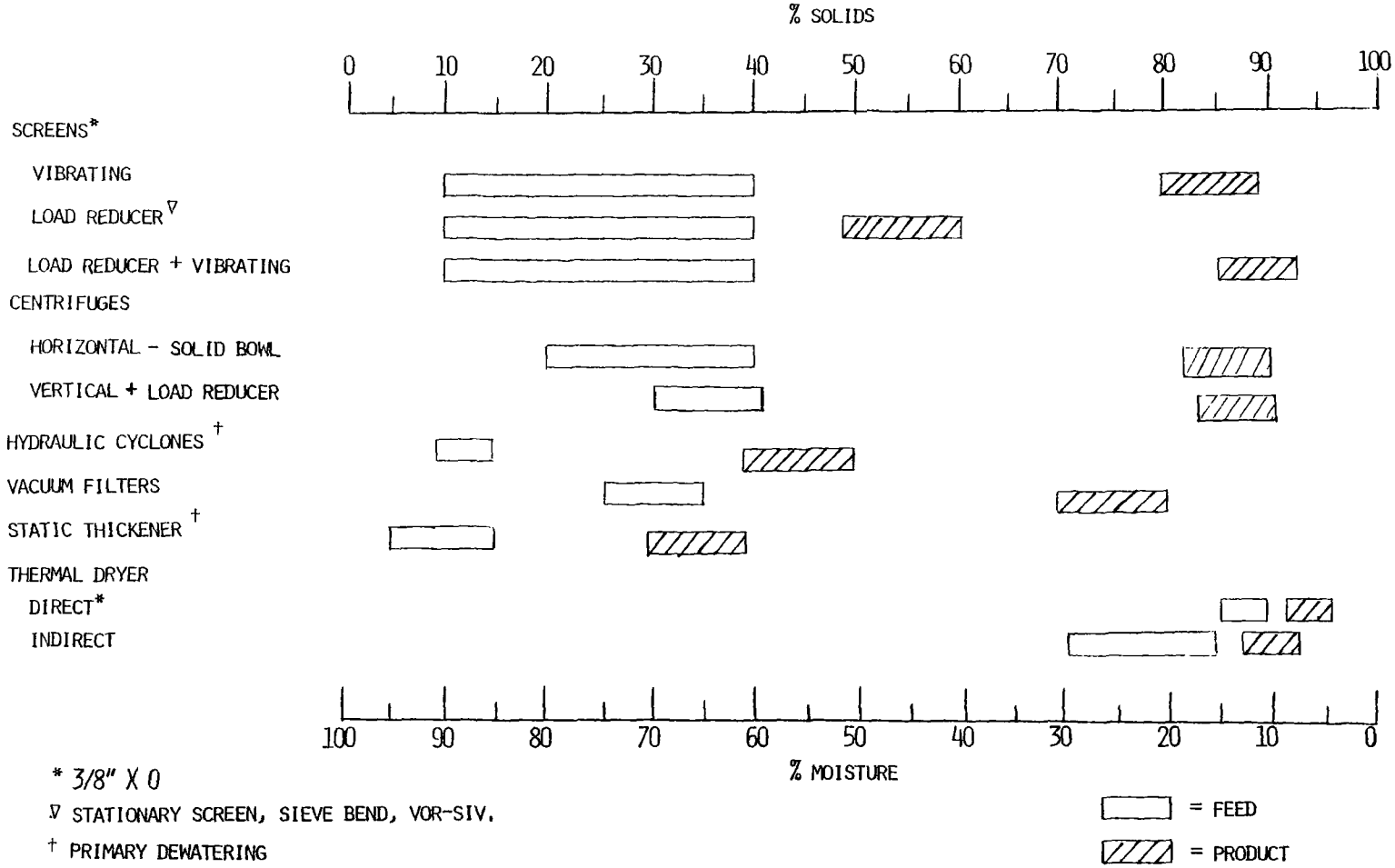

* 3/8" X 0

∇ STATIONARY SCREEN, SIEVE BEND, VOR-SIV.

† PRIMARY DEWATERING

rate is assumed.

Screens	-	Particle size
Centrifuge	-	Initial density, centrifugal speed
Filters	-	Percent minus 44 microns (325 mesh), Pressure differential, type of filter media
Hydraulic cyclones	-	Operating pressure, Diameter of cyclone
Static thickener	-	Area
Thermal driers	-	Initial feed moisture
Oil agglomeration processes	-	Particle size, percent oil

In summation, it may be said that the problems of fine coal processing, dewatering, drying and handling, are not new and that current technology is capable of meeting the needs created by the increasing volume of fine coal. The most important element to be determined is what is the increased cost of dewatering associated with a large fraction of fines or all fines necessary for a high degree of sulfur removal.

MECHANICAL DEWATERING DEVICES

Screens

Vibrating screens, stationary screens and a number of specialized screens are utilized primarily for sizing and media recovery in modern coal cleaning plants. As sizing devices for coal 9.5 mm x 0 (3/8 in x 0), they simultaneously dewater and discharge the oversize product with a moisture content from 8 to 20 percent. However, their use in the dewatering of minus 0.58 mm (28 mesh) coal is limited by the plugging of the screen apertures with fine coal particles.

Vibrating Screens--

The most common screens used in modern coal preparation plants are perforated plate and woven wire screens that vibrate. Vibrating screens, compared to fixed screens, have a large process capacity per unit of screen area and floor space resulting in a lower cost of operation per ton of coal screened. They can handle wet coal product down to 0.58 mm (28 mesh) top size. Vibrating screens have also been utilized to sludge dewater material down to 0.08 mm (200 mesh) but with an attendant increase in product moisture

content.

The use of vibrating screens as dewatering devices for fine coal is infrequent, but recent developments indicate that these devices may see increased use in helping to recover ultra-fine coal from "black water" and in the recovery of coal fines formerly sent to settling ponds. The following table summarizes the typical feed rates, product moisture and percent recovery rate of vibrating screens used in this particular application.

Recovery of Fine Coal from Slurry

Screen Arrangement	Feed rate, kkg/h/m^2 (tph)/ft^2	% moisture	% recovery
Vibrating screen	15 (1.5)	28	15
Vibrating screen with sieve bend	80 (8.0)	25	49
Vibrating screen with scalping deck	80 (8.0)	25	37

Vibrating screen operation--Vibrating screens consist of a substantially flat screening surface, usually stretched taut and inclined, which is caused to vibrate with a small amplitude and a comparatively high frequency. High frequency vibrations keep the screen openings clear of wedged particles and helps to stratify the particles. In general, the finer the size of the coal, the smaller is the amplitude and the higher the vibration frequency. The screening surface often has slotted openings and is usually constructed of stainless stell to provide resistance to abrasion, corrosion and erosion.

The screening surface is set in a rectangular, circular or conical frame having side walls suitable to confine the slurry flow. Vibratory motions are either created by mechanical devices such as eccentric rotors, cams or sprockets, or by electrical vibrators.

Particle movement on or over the screening surface is the result of gravitational forces and the force exerted on the particles by the screen surface. Most vibrating screens utilize gravity as the primary force. The

screen surface is inclined to such an extent that a very slight impulse to the screen is sufficient to cause the particles to progress down the surface.

Vibrating screen performance--The performance of vibrating screens is influenced by several factors, such as: depth of bed, screen fabric wear, feed rate and, most important, percent of solids in the feed slurry. Vibrating screens, combined with sieve bends or scalping decks, are efficient devices in primary dewatering.

Recent technology: the Derrick screen--Derrick Manufacturing Company claims to have developed a screen surface which is non-blinding. It consists of a sandwich screen concept - the mounting together of two screen surfaces - and utilizes a patented rubber screen surface to reduce wear. The action of the two screens against each other, due to a special high-frequency, low-amplitude vibrating motor, prevents near-size particles from becoming lodged in the top screen. The openings in the bottom screen are constructed slightly larger than those in the top screen to ensure that particles do not become trapped between the screens. The manufacturer claims that this screen is capable of effecting a sharp separation down to 0.037 mm (400 mesh). The Derrick screen also incorporates a section consisting of a slotted natural rubber surface fitted with a patented vacuum system to assist in removing additional surface moisture.

Stationary Screens: The Sieve Bend--

One of the main types of stationary screens utilized in modern coal cleaning plants is the sieve bend. Originally developed by the Dutch State Mines in the early 1950's as a fine coal classifying device, the sieve bend is now widely used for the primary dewatering of fine coal slurry ahead of vibrating screens and centrifuges to reduce the water load on these latter devices. The sieve bend has no vibrating or moving parts and utilizes only gravitational forces. Because of these factors, the sieve bend has a low operational cost.

In essence, the sieve bend is a stationary wedge bar screen with the bars oriented at right angles to and across the line of flow. The screening surface is commonly curved in a 60 degree concave arc at a radius of 51 to 152 cm (20 to 60 inches) with 76 cm (30 inches) being the most common. The feed end of the sieve is tangential to the vertical resulting in the discharge end lying at 30 degrees to the horizontal for a 60 degree sieve bend. The coal particles on the surface of the sieve bend start to slow down at the discharge end, thus contributing to the dewatering function.

Sieve bend operation—The sieve bend is of greatest value when treating slurries with high moisture content. Coal slurry at zero feed pressure is introduced into the sieve bend feed box. A series of baffles in the feed box spreads the slurry evenly across the entire width of the screen deck. The slurry drops from the last baffle, passes through the feed spout, and is fed tangentially onto the screen surface.

The full stream of coal slurry flowing over the sieve bend surface decreases in depth in increments of about one-quarter of slot width each time it passes a slot; the water passes through the slot openings while the coal particles continue over the screen surface. The effluent from the sieve bend flows into the effluent chamber and the particles of coal are discharged over the lip of the sieve bend.

Sieve bend performance—A volume of 750 liters per minute (200 gallons per minute) of 57 x 0 mm (2¼ x 0 inch) coal slurry per 0.3 meter (foot) of sieve bend width can be reduced from 85 percent moisture to 35 percent moisture on a 76 cm (30 inch) radius bend containing slot widths of 1/2- or 3/4-mm and 1-1/2-mm wedge bars. Volumes as high as 3,735 liters/min/meter (300 gpm per foot) of width can be processed by the sieve bend in preparation for feed to tables or jigs where high moisture is not objectionable and undersize can be tolerated in the overproduct.

The Vor-Siv--

The Vortex Dewatering Sieve, commonly known as a Vor-Siv, was developed by the Polish Coal Industry to fit the need for a unit that would dewater and classify high volumes of coal particles in a water slurry. The Vor-Siv is manufactured under license from the Polish government and, as of 1976, there were 36 Vor-Sivs installed in the U.S.A., with another 29 in the process of being installed or delivered. The Vor-Siv combines the operating characteristics found in cyclones, sieve bends, cross-flow screens and vibrating screens, has no moving parts and requires no energy for operation.

Vor-Siv operation--Dewatering of solids by the Vor-Siv is accomplished by the spiraling or vortex flow of the slurry over a stationary inverted cone-shaped wire screen. Material to be dewatered is gravity fed, or pumped in slurry form through the inlet nozzle. A covered trough directs the flow around a circular raceway and down onto a fine screen positioned at a 45 degree angle to the raceway.

The vortex motion, created by the centrifugal and gravitational forces, causes the solid particles of the slurry to change from a radial flow to a downward spiraling flow on the surface of the inverted cone screen. The liquid with the undersize solids circulates in an almost horizontal path and is discharged through slits of the screen into the effluent collecting chamber. A discharge outlet is provided for the dewatered material.

Wear is a major concern in all fine screening devices. While the wedge-bars in the Vor-Siv are much heavier than the wire used in fine screen cloth, abrasive wear increases the gap between the bars. Wear and blinding must be monitored to assure efficient operation.

Vor-Siv performance--To date, the most popular applications of the Vor-Siv in the U.S.A. has been as a dewatering device ahead of centrifuges, a desliming device ahead of Deister Tables, and as a load reducer device ahead of thickeners and flotation cells. The Vor-Siv has processed feeds of minus 9.53 mm (3/8 inch) particles in slurries ranging from 10 to 30 percent solids, with flow rates up to 12,000 l/min (3,200 gpm). A coal slurry containing 136 kkg/hr (150 tph) of dry solids has been successfully dewatered by a single unit.

In general, a sieve bend or cross-flow screen effecting a 0.58 mm (28 mesh) separation, can be expected to process about 114-151 l/min (30 to 40 gpm) of slurry per 0.093 m^2 (square foot) of wire surface, whereas a Vor-Siv will process from 190 to 308 l/min (50 to 55 gpm) up to 265 l/min (70 gpm) of slurry per 0.093 m^2 (square foot) of screen area. Sieve bends and cross-flow screens providing a separation at 28 mesh will produce 35 to 50 percent surface moisture in their plus 0.58 mm (28 mesh) material. The Vor-Siv can produce a product with a moisture content of about 20%.

Rotating Wedge Wire Screens--

Another type of screen used for dewatering fine coal is the rotating wedge-wire screen. This mechanism allows wastewater to pass vertically downward from the outer surface to the inner surface of a drum by gravitational forces. The screened wastewater then passes out through the lower half of the drum to a collection trough. Solids are retained on the outer surface of the drum and are removed by a fixed scraper blade. A screen spacing of 1.5 mm (0.06 inches) is recommended for the dewatering of fine coal.

The V-Screen--

The V-Screen also can be used for dewatering fine coal. This screen provides for wet coal to be fed into a vaned-disc distribution plate which is located at the top of a drum and rotated in unison with the drum. The coal particles are dispersed outward to the top of the outer perimeter of the screening cloth which is attached to the drum. The combination of high speed gyration and centrifugal forces throws the water through the screen. When a feed product of 4.76 mm x 1.65 mm (3/16 inch x 10 mesh) containing 22% moisture is processed by the V-Screen, the moisture content is reduced to 10%.

Centrifuges

Centrifuges - sometimes called centrifugal driers - are mechanical devices which use centrifugal forces to dewater fine coal products received from primary dewatering units. The feed to a centrifuge usually has been first processed by dewatering screens or primary dewatering devices. The objective in the centrifuging of fine coal is to remove as much of the remaining free moisture as possible through the application of centrifugal

force.

In general, the centrifuged product contains from 10 to 20 percent moisture, depending upon several factors which are:

- amount of centrifugal force applied;
- amount of moisture in the feed;
- size consist of the feed;
- rate of flow to the centrifuge;
- type of screen cloth used;
- size of openings in the cloth; and
- chemical or heat additives used to reduce the surface tension.

Basic types of centrifuges in use in modern coal preparation plants are:

- screen bowl centrifuges;
- solid bowl centrifuges; and
- vibrating basket centrifuges.

Perforated Basket Centrifuges--

Perforated basket or screen bowl centrifuges commonly have baskets that range from 30.5 to 137 cm (12 to 54 inches) in diameter. The types in general use are those with positive transporting devices and those without positive transporting devices.

Perforated basket centrifuge operations--Positive discharge perforated basket centrifuges have two rotating conical elements: an outside conical screen and an inside solid cone which carries spiral hindrance flights. A single motor provides power for the gears which produce a differential speed in the two rotating elements. The two elements rotate in the same direction, but the screen element moves slightly faster than the cone carrying the spirals. The outer drum is usually made of stainless steel wire with replaceable screens mounted on its inner surface.

The wet coal enters the machine at the top and falls on the apex of the cone where the centrifugal force developed by the rotating cone throws the coal slurry up against the screen. The water passes through the perforations and is collected in an effluent chamber while the coal is gradually transported to the bottom of the screen cone as the flights spiral downward. The

increasing diameter of the cone and screen subject the coal slurry to zones of increasing centrifugal force.

Perforated basket centrifuges without transport are the simplest of all centrifuges. Partially dewatered coal is introduced to the top of an inverted, truncated, conical basket. The coal particles are accelerated by the rotating basket and the water drains through the screen perforations. The coal particles slide down the surface of the basket to the base of the cone, where they are discharged. This type of centrifuge without transport has found limited application.

Perforated basket centrifuge performance--The finished coal product has a surface moisture content that generally is 20 percent lower than similar coal dewatered by vacuum filters. On fine coal (20% minus 325 mesh), the dewatered result is 12 to 14 percent surface moisture. Throughputs range up to 91 kkg/hr (100 tph) and recovery almost always exceeds 90 percent.

Solid Bowl

The two principal elements of the solid bowl centrifuge are the contoured, rotating bowl, which acts as a settling vessel, and the conveyor or scroll for discharging the settled solids. The bowl has adjustable overflow weirs at its larger end for the discharge of the effluent and fixed parts at the opposite end for discharge of the solids.

Solid bowl centrifuge operation--As the bowl rotates, the centrifugal force causes the slurry to form an angular pool whose depth is determined by the adjustment of the effluent weirs. The solids discharge end of the bowl is reduced in diameter so that it lies submerged in the pool thus forming a drainage deck for dewatering the solids as they are conveyed across it by the scroll. Feed enters through a stationary supply pipe and passes through the conveyor into the bowl itself.

Solid bowl centrifuge performance--The major advantage of the solid bowl centrifuge is that it can be used to dewater ultrafine coal slurries with high clay content. Automatic addition of flocculating agents is also available. A second advantage is that the solid bowl centrifuge will operate continuously without close attention from operators. In an attempt to close the preparation plant water circuit, a recent modification of the

solid bowl centrifuge has been introduced by a major manufacturer. By increasing the depth of the pool and moving solids concurrently, a test model has a proven solids recovery in excess of 99.9 percent.

A disadvantage of the solid bowl centrifuge is that the machine requires additional power, because it must accelerate the water load as well as the solids. Considerable power is also consumed because the scroll must push the solids up to the discharge ports.

Centrifuge bowls are available in diameters of up to 152.4 cm (60 inches). Capacities can reach 91 kkg/hr (100 tph).

Vibrating or Oscillating Basket Centrifuges--

The third type of centrifuge is the vibrating or oscillating basket centrifuge, with either a horizontal or vertical axis design. Its primary use is in the dewatering of a coal slurry containing particles coarser than 0.59 mm (28 mesh). Vibrating basket centrifuges are frequently installed because of the lower power requirements and long basket life.

Vibrating basket centrifuge operation--The vibrating basket centrifuge is distinguished from other basket types in that the rotating basket is vibrated axially which causes the solids to move through the machine to the larger diameter discharge end without the aid of a transport device. The oscillations also keep the basket opening clear and constantly loosens the cake while aiding dewatering. Two motors are generally employed, one for basket rotation and one for vibratory action.

The feed enters at the smaller end of a truncated screen, where it is subjected to a centrifugal force. Minimum degradation of the coal is incurred during the movement to the discharge end because of the lower rpm's and consequently lower G forces (25 to 120). Lack of scrolls to crush the coal also helps to keep degradation to a minimum. The lower centrifugal force allows for a thicker coal bed for higher throughput. Wear on the basket and horsepower requirements are also minimized because of the utilization of a lower centrifugal force.

Horizontal axis vibrating basket centrifuges differ from vertical axis units only in the orientation of the unit, feed mechanism and in the fact that the horizontal unit requires less headroom for installation.

Vibrating basket centrifuge performance—A disadvantage arising from the lower centrifugal force is a higher coal moisture content than that produced by perforated basket or solid bowl centrifuges treating similar coal slurries. However, since the vibrating basket centrifuge primarily treats the coarser, plus 0.59 mm (28 mesh) coal, the resultant moisture content is acceptable. Solids recovery generally exceeds 97 percent, depending upon the friability of the feed coal. The current maximum capacity of a vibrating basket centrifuge is 320 kkg/hr (350 tph).

Recent technology—A number of new developments are evident in various centrifuges, although these are mostly in terms of capacity and improved maintenance. Germany and U.S.S.R. have developed a double-basket type centrifuge, which, it is claimed, does away with the need for dewatering screens ahead of the centrifuge. One of these is the Soviet VGS-s, a horizontally rotating and filtering centrifuge developed to dewater pulps of low solids content produced during jigging operations. It vibrates horizontally and features internal pushers to ensure a more effective contact between the coal particles and the basket screen. The VGS-2 will accept a top size feed of 19 mm x 0 (3/4 inch by 0). Depending upon the size consist of the feed material, this centrifuge claims to provide a final product containing from 5 to 10 percent moisture. A prototype machine is reportedly under construction in the United States.

Spiral Classifiers—

Spiral classifiers are frequently used in coal preparation plants to assist in the dewatering of coal slurries and coal refuse. However, their most typical use is in pre-thickening of coal refuse suspended in the preparation plant water recycle circuit prior to a thickening or filtering operation.

The most common type of spiral classifier used in modern coal preparation plants is the horizontal current type in which the slurry is introduced into the pool area and the settled solids are carried away by a spiral device.

Spiral classifier operation—Spiral classifiers consist of an inclined, round-bottomed tank with one or two spirals mounted on a shaft parallel to the bottom. The spiral structure conveys the settled solids up the bottom of the tank to a discharge lip. The slurry is fed into the classifier pool

with a minimum head and at pool level to minimize undesirable agitation. The pool level is maintained by adjusting the height of the overflow weirs. The overflow drops into a collection pipe and is usually routed to a thickener. The underflow may discharge directly to the refuse belt if sufficiently dewatered or, if not, to some form of secondary dewatering device. The size of separation is determined by the height of the overflow weir, feed rate of the slurry and the rotational speed of the classifier spirals. In general, the higher the flow rate or the increasing rotational speed of the spirals, the coarser the size of separation.

Spiral classifier performance—One spiral classifier installation in West Virginia processes 59 kkg/hr (65 tph) of coal refuse and 4,350 l/min (1,150 gpm) of water. The split, at 0.30 mm (48 mesh), results in approximately 55 kkg (61 tons) of overflow material per hour. Elimination of much of the coarse solids also reduces the load on the thickener.

Filters

Filters are used in dewatering of froth flotation concentrates and fine coal slurries from thickeners. Filters process a slurry suspension containing a high percentage of solids and remove the water to produce a wet cake of coal particles ranging from 20 to 30 percent moisture.

The two basic types of filters are disc-type and drum-type.

Disc Filters—

Disc filters offer several advantages over other types of filters. Large amounts of filter surface area , up to 400 square meters (4,300 square feet) , can be contained in relatively small areas of preparation plant floor space. The disc filter is ideal for use on relatively slow filtering slurries requiring long drying periods with little or no cake washing. The initial capital cost is about half the cost for the same surface area contained in rotary drum-type filters. The design of a disc composed of many wedge-shaped sections facilitates ease of maintenance as each wedge can be removed and serviced separately, or it can be replaced with a spare wedge while the original is being repaired.

Disc filter operation—The disc filter consists of a number of round, disc-shaped filter sections mounted on a rigid, hollow shaft. Each filter section is composed of several wedge-shaped sectors.

The filter sections are connected to the vacuum system by a series of pipes that run through the hollow central shaft to a rotary valve mechanism located at the end of the shaft. The wedge-shaped hollow sectors are connected to the vacuum system through these pipes. The outside of each sector is covered with a filter media, commonly constructed of stainless steel wire mesh, saran, polyethylene or nylon.

The lower portion of each disc is submerged in the coal slurry receiving tank or trough. In open tanks, an agitator is present to ensure that settling of the coal particles does not occur. Newer filters employ individual troughs for each filter disc so that additional agitation is not required to prevent particle settling.

The entire disc assembly is rotated by a worm gear attached to the hollow shaft. As each sector of the disc is submerged into the tank containing the coal slurry, it is connected to the vacuum outlet in the shaft by a rotary valve. A minimum pressure differential of 0.67 to 0.80 atm. (20 to 24 inches of mercury) is required and remains in effect during the time the disc sector is submerged and for a short time afterward to dry the cake further.

Filtrate passes through the filter media into a pipe, through the hollow shaft and out the rotary valve, leaving a cake of coal particles on both sides of the sector.

Removal of the filter cake is accomplished by a combination of scraping and reverse blow-back. Prior to re-entering the slurry tank, the filter sector is connected to the compressed air port causing air to be blown into the sector. The cake is first loosened, then scraped off and finally conveyed away from the filter.

Cycle times range from one minute per revolution to three minutes per revolution, depending upon the percentage of minus 0.07 mm (200 mesh) material present, percentage of solids in solution and the amount of clay or slimes contained in the finer fractions.

Disc filter performance--At the usual vacuum of 0.53 to 0.60 atm. (16 to 18 inches of mercury) preparation plant filters processing a fine coal slurry containing 30 percent solids produce a filter cake containing 18 to 28 percent moisture at rates ranging from 40 to 60 kkg/hr (48 to 70 tph).

Recent technology--A new line of disc filters has been engineered by one company. The features reportedly include a disc filter diameter of more than 5.27 m (17.3 feet), 30 sectors per disc [32 kg (70 pounds) per sector], individual sector drain lines, operating speeds ranging up to 4+ RPM, a narrow, individual filter trough for each disc, no need for an agitator, deep submergence (55 percent), and precisely controlled blow-back.

Filtering efficiency is reportedly increased to discharge 95 percent of a filter's caking per revolution. Another reported advantage is a 45 percent power saving attributed to a lower power requirement for the drive.

Drum Filters--

Drum filters range in size up to 3.15 m (10.33 feet) in diameter and 8.46 m (24.75 feet) in length. Longer versions are available if a compressed air discharge is not used. Filter surface area can reach 93 square meters (1,000 square feet).

The chief advantage of drum filters over disc filters is that drum filters have a cleaner discharge because of the thinner filter take. Also important is the drum filter's ability to operate under varying feed load conditions.

Modern coal preparation plants utilize two types of drum filters: those with inside filter media and those with outside filter media.

Drum filter operation--In an outside filter media design, a drum covered with filter media rotates in a tank containing the coal slurry. During the time that a section of the filter drum is passing through the tank, and for a period of time after the section emerges, a vacuum is applied to the inside of the drum. This causes the liquids and solids to be drawn to the filter media where the liquid and minus 0.07 mm (200 mesh) solids pass through the media and out of the center of the drum to the filtrate discharge portion of the system. The solids in the slurry form a filter cake which dries as the

drum continues to rotate. The cake is discharged prior to re-entry into the slurry tank.

The two types of discharge used in coal preparation are the belt discharge and the blow-back discharge.

In the belt discharge, the filter belt is drawn away from the drum face. The cake breaks away and falls into a receptacle as the belt turns at a sharp angle over the discharge roller. In blow-back discharge, air pressure "billows" the filter cloth gently against the scraper blade as the drum rotates toward the discharge roller. Filter wear is minimized by the blow-back discharge method.

On an inside filter media design, the division strips, drainage strip and filter media are essentially the same as on the outside filter design. One end of the drum is completely closed and the filter has no outer tank, but rotates on rollers. A discharge chute is placed in the drum along the axial center line.

Coal slurry is fed directly into the drum and forms a pool at the bottom. No agitator is necessary as the quick settling of the solids is a desirable feature with filters of this type. As the filter cake emerges from the slurry pool it is subjected to a spray wash. When a section reaches the vertical centerline, a pressure blow-back causes the cake to drop off into the discharge chute. In some models, a conveyor belt is used to bring the discharged cake out of the drum. This type of filter is not used on slow filtering slurries because of the short time between emergence from the slurry pool and the cake discharge.

Drum filter performance--It is possible to reduce the moisture content of a flotation froth from 65 to about 18 percent, which greatly improves the handling characteristics of the fine coal.

Other Filters--

Pressure filters have found limited applications in coal preparation plants, primarily in foreign countries. New installations of these devices are uncommon in the United States because of the high capital cost involved, as much as 12 times the initial cost of a comparable capacity disc filter, and because of the manpower required to operate and assist with the discharge

of the filter cake. The addition of a fully automated discharge type pressure filter reportedly has re-established American interest in these units. A single operator may be able to operate up to 10 filters.

Recent Technology--

A recent development in filtration is the horizontal, belt-type vacuum filter utilizing steam as a further drying aid. While this type of operation is approximately 2-1/2 times as costly as conventional disc filtration at ambient conditions, preliminary data indicates that product moisture can be lowered to levels (6.9 to 9.0 percent) that would permit the elimination of thermal driers in coal preparation plants.

Horizontal belt filter operation--Basically, the system consists of a 3.2 m (10.5 feet) long horizontal belt filter that conveys the coal slurry. The filter system applies the negative pressure differential from below the belt. The initial 1.9 meters (6 feet) of the belt are equipped with a hood, the first 1.1 meters (3.5 feet) of which supplies steam to the filter cake while the remaining 0.8 meters (2.5 feet) supplies hot, dry air. The last 1.2 meters (4 feet) of filter length is exposed to the atmosphere.

Horizontal belt filter performance--In laboratory tests, two major manufacturers claimed the ability to dewater approximately 1 to 2 kkg of feed per hour per square meter (50-70 pounds of feed per hour per square foot) of active filter area to a final moisture content of 6.5 to 7.5 percent.

Hydraulic Cyclones

As they are used in fine coal dewatering, hydraulic cyclones, more commonly referred to as hydro- or water-only cyclones, have similar application to static thickeners: feed pulp percent solids is 8 to 15 percent and is reduced to between 40 and 60 percent solids. However, the thickener will more easily handle large volumes of slurry containing very fine coal.

In appearance, the hydrocyclone differs from the conventional classifying cyclone , the hydrocyclone has a short, stubby bottom, while the classifying cyclone has a long, tapered conical bottom. The hydrocyclone also has a longer and adjustable vortex finder and much larger orifice sizes for a given diameter than the conventional cyclone. Numerous variations exist in

available bottom design, with each manufacturer claiming the advantages of his own particular design.

When processing fine coal, either all ceramic or rubber-lined cyclones are standard, and in general, the smaller the particle size, the smaller the cyclone diameter.

The hydrocyclone, as a primary dewatering or thickening device for fine coal, has numerous advantages over other thickening devices. Among these are:

- a simple design incorporating no moving parts, and therefore, little maintenance;
- once initial adjustments have been made, usually no further adjustments are necessary;
- limited space requirements for operation; and
- pre-screening is not required.

Among the disadvantages are:

- the large quantity of water required for proper operation means that more horsepower is necessary to operate the circuit; and
- fine coal is lost in the overflow.

Hydrocyclone Operation--

The cyclone body consists of a short cylindrical section which is attached to an inverted truncated conical section. The centrifugal force causes the particles in the feed to move to the inclined side walls, where they slide down to the cone's apex and then out the underflow orifice in the form of a thickened slurry. The liquid portion of the feed travels to the center of the cone and is discharged to the overflow orifice.

The two most important factors which influence the application and efficiency of the cyclone are its diameter and cone angle. For small feed particles, a small diameter cyclone must be used for dewatering. Also, the smaller the cone angle (greater than 10°), the higher the recovery obtained in the underflow product.

Another factor affecting the operation of the cyclone is the orifice size. A larger underflow orifice will increase the flow rate and percentage of solids in the underflow, thereby decreasing the concentration of solids in the overflow. Large overflow orifices will increase the total flow, weight concentration and particle top size contained in the overflow while the solids concentration in the underflow increases along with the percentage of coarse sizes contained in the underflow.

Hydrocyclone Performance--

Cyclone thickeners are available in many sizes. The size chosen for a particular installation is directly dependent upon the size consist of the feed. For example, 7.6 mm (3 inch) diameter cyclones are used to process slurries containing particles having a size range of 2.4 mm x 0 (8 mesh by 0). The units are normally arranged in banks containing 22 cyclones each with a common manifold in the single feed and overflow lines. One bank of cyclones will handle a flow of approximately 950 l/min (250 gpm) of slurry at a feed pressure of 3.72 atm. (40 psi).

The top size of feed to a 20.3 cm (8 inch) diameter cyclone should be less than 4.8 mm (3/16 inch). The standard 20.3 cm (8 inch) diameter cyclone should be less than 4.8 mm (3/16 inch). The standard 20.3 cm (8 inch) diameter cyclone will process approximately 415 l/min (110 gpm) of slurry at a feed pressure of 3.72 atm. (40 psig). The 20.3 cm (8 inch) diameter cyclones are normally arranged in banks of two, three, or four units with common feed and overflow manifolds.

The 35.6 cm (14 inch) diameter cyclone has a capacity of 1,230 l/min (325 gpm) at a feed pressure of 3.72 atm (40 psig) and is designed to handle slurries with particles up to 6.4 mm (1/4 inch).

Recent Technology--

A new, small-diameter hydrocyclone that is reportedly inexpensive and particularly suited to multiple assembly has been developed in the United Kingdom. A particular feature of the new 25 mm (1 inch) device is that it can be easily cleaned either manually or automatically. Particle diameter cut point is reportedly 2 to 20 microns. The new type of cyclonic separator

will be manufactured under license from the U.K. National Research and Development Corporation.

Static Thickeners

The term "thickener" is generally applied to a large-diameter sedimentation vessel. Its primary purpose is to provide maximum concentration of the solids that are present in the feed. The solids in the feed pulp seldom exceed 8-15 percent, while the discharge increases the concentration of solids in suspension to 30 to 40 percent. The thickening step is usually followed by additional dewatering. Three types of thickeners are considered, conventional, Lamella, and Deep Cone.

Conventional Thickeners--

A conventional thickener, which may range in size from 1.8 to 99 meters (6 to 325 feet) in diameter, consists of a shallow circular tank with a gently sloping bottom and a slowly revolving arm which is equipped with blades to rake the settled solids into a central discharge point. Size of thickeners is determined by the influent flow rate to be handled, percent solids in the pulp, size distribution of the solids, and the amount of solids allowable in the overflow.

Conventional thickener operation--Influent pulp is introduced into the center of the tank. The entering pulp displaces part of its volume as a peripheral overflow of moderately clear water, while the solid particles fall slowly downward. Material that is sufficiently coarse falls rapidly to the raking zone, while the remainder of the solid particles slowly settle, leaving a zone of clear water toward the upper periphery of the tank. A transition stage occurs through which the pulp steadily increases in density as it settles until the compression zone is reached where the individual particles are squeezed together by the weight of the fluid above. The thickener rakes slowly revolve through this compression zone gathering and sweeping the settled particles into the central discharge well, where they are removed by a pump. The water overflowing from the periphery can be processed further or recycled to the coal preparation plant.

Conventional thickener performance--Raw coal, or plant feed having generally raw coal characteristics , will require a unit area for thickener operation of 3 to 10 sq meters/metric ton/day for solids that range between 25 to 85 percent minus 0.07 mm (200 mesh). Concentration of this type material generally is between 30 and 40 percent solids in the thickener underflow. Flotation tailings that are between 25 and 85 percent minus 0.07 mm (200 mesh) will require unit areas for thickener operation running between 4.2 and 6.9 square meters/metric ton/day. The economic limit of underflow concentration is usually about 35 percent solids by weight. Flotation tailings that are finer than 85 percent minus 0.07 mm (200 mesh) and have a very high ash content will need unit areas between 6.9 and 13.8 square meters/metric ton/day, depending upon the ash content, and can be concentrated to about 30 percent solids in the underflow.

Lamella Thickeners--

The Lamella Gravity Settler, usually referred to as a Lamella Thickener, is an inclined, shallow depth sedimentation device. It performs the same function (the same settling area for a given flow rate) as a conventional thickener, but occupies only a small fraction of the floor space. The unit has no moving parts, consisting only of a tank with multiple inclined plates onto which the solids settle and slide to the bottom for collection.

Lamella thickener operation--The Lamella thickener consists of a large tank with inclined plates inside the tank. The feed enters through a bottomless feed box which distributes the feed over the Lamella plates. The liquid flows upward over the plates while the solid particles settle on the plates and slide downwards in counter-current flow to the clarified liquid. From the feed point upwards there is a free settling clarification area. Below the feed point is the hindered settling, thickening area. The clarified liquid enters discharge boxes through throttling holes that insure an even flow distribution between the plates. The particles slide down the plates to a hopper where compression is increased by a low amplitude vibrator. The thickened material is then removed by a pump.

Lamella thickener performance--These thickeners generally can produce overflows with less than 500 ppm solids. In laboratory tests, overflows of less than 100 ppm and thickened-sludge underflows in excess of 20 percent by weight were obtained. Feed loading rates [20.4 to 24.4 liters/min/m^2 (0.5 to 0.6 gpm/ft^2)] and flocculant dosages (about 2 ppm) are in line with those of conventional thickeners. Lamellas will handle up to 5,600 liters/min (1,500 gpm).

Deep Cone Thickeners-

Developed by the UK's National Coal Board, the evolution of the Deep Cone Thickener followed commercial introduction of high molecular weight flocculants, usually called polyelectrolytes. The apparatus is essentially a settling vessel of considerably less settling area than a conventional thickener and is usually cylindro-conical in shape.

Deep cone thickener operation--Several cones are usually operated in parallel to achieve the required throughput. Each cone is gravity fed through a flow control valve via an open launder, the purpose of which is to mix the feed (by the use of baffles) thoroughly with the flocculant. The launder discharges to a central feed well, where the solids begin to settle and, with consolidation aided by gentle stirring, form a plug at the apex of the cone. The clarified water overflows into a peripheral launder and can be reused within the plant. The pressure exerted by the suspended solids is constantly measured by a pressure pad, which transmits a pneumatic signal to a valve controller. Upon reaching a certain set point, the pneumatically controlled valve allows discharge of the thickened sludge until the pressure drops below the certain set point, at which time the valve closes.

Deep cone thickener performance--Deep cones yield an underflow product containing 35 to 45 percent moisture and perform well on flotation tailings containing high percentages of minus 53 micron particles (-270 mesh).

THERMAL DRYING

Thermal drying is a process of accelerated evaporation of surface moisture. The wet coal is brought into contact with hot gases to produce surface moisture in fine coal (6 to 12 percent range). The two types of thermal driers in use in coal preparation plants are direct and indirect.

Direct Heat Driers

Direct heat driers bring the thermal transfer agent (hot gases) into intimate contact with the fine coal. This must be done carefully so that the coal neither catches fire, loses volatile matter, or in the case of coking coal preparation, is oxidized, which would destroy its coking properties. At the same time, the exhaust gases, carrying moisture away from the coal surfaces must be sufficiently hot to prevent condensation of moisture before it is removed from the drier. A multitude of factors affect the performance capability of a thermal coal drier: drying temperature, fuel, inlet temperature, air volume and drier size. However, the greatest single factor affecting performance is temperature. Temperature in the drying zone should always be as high as safety will permit. When low temperatures are used, sensible heat losses in the exhaust gas are usually greatly increased, because a high air flow is needed to deliver the required heat. Moreover, lower temperature means lower thermal efficiency, higher fuel and power requirements and increased amounts of dust carryout. There are six basic types of direct heat thermal driers in use in coal preparation today. Their usage is shown in the table on the following page.

Thermal Drying of Bituminous Coal and Lignite by Type of Equipment

	Percentage	
	1974	1975
Drier type:		
Fluidized-bed	68.3	72.5
Multilouver	8.3	5.5
Rotary	1.9	2.2
Screen	5.5	7.9
Suspension or flash	16.0	11.7
Vertical tray and cascade	--	0.2
Total	100.0	100.0

Based upon approximately 32.6 metric tons (36 million short tons) dried per year.
SOURCE: Mineral Industry Surveys, Coal--Bituminous and Lignite in 1975, U.S. Bureau of Mines

Fluidized Bed Driers--

Basically, the principle of fluid bed drying is uncomplicated: Air heated by either a pulverized or stoker-fired coal furnace is pulled upward through a constriction plate by a negative pressure suction fan. Heated air suspends the coal particles in a buoyant effect and causes them to act like a turbulent liquid. This "liquid" flows at a relatively even depth from the feed end to the discharge end of the fluidized bed drier. The fluidized coal particles are completely surrounded by hot drying gases where intimate contact is obtained between the gases and the coal particles for removal of surface moisture. The principle of fluidization as applied to the drying process results in a thermally efficient method for moisture removal from coal solids.

Fluidized bed drier operation--The fluidized bed drier utilizes a constriction plate framed into a housing such that all drying air passes uniformly through the plate. Material to be dried is fed uniformly onto this plate, while heated air is pulled through the constrictions under a negative pressure by an induced draft fan. Heated air passing through the plate

creates extremely high velocity air currents which suspend the material above the plate thus causing the mass to act like a liquid moving from feed to discharge. Suction operating pressures assure that all the drying gases pass through a dust collector, preventing the loss of ines through leakage.

Fluidized bed drier performance--1976 results of tests on one American manufacturer's fluidized bed drier reported evaporation of 43.5 kkgph (48 tph) of moisture for Western subbituminous coal and 47.2 kkgph (52 tph) of moisture for Eastern bituminous coal. Surface moisture in the Western coal was reduced from 25 to 12 percent and in the Eastern coal from 11.5 to 3 percent.

Multilouver Driers--

The Multilouver drier is adapted to handling large capacities and is applicable to those materials requiring a comparatively short retention time.

Multilouver drier operation--The multilouver thermal drier consists of a solid outer cylindrical shell containing full length louvers and an inner shell of overlapping louvers which support the bed of material and increase in diameter in the direction of flow. The material travels towards the discharge end as the drum slowly revolves. In operation, the heat transfer medium is introduced through the louver openings, permeates the bed and intimately contacts every particle.

Multilouver drier performance--A 1976 test run on 4.5 metric tons (5 tons) of Colstrip coal resulted in a moisture reduction from 25 to 10 percent. Results indicated that Western subbituminous coal could be dried at realistic feed rates without spontaneous combustion.

Rotary Driers--

The Rotary Drier, sometimes called a Drum Drier, usually consists of a solid outer cylindrical shell and an inner shell of overlapping louvers which support and cascade the coal particles as the drying gases pass through the drier from the outer annulus to the inner tube.

Rotary drier operation--The rotary-type drier essentially is a rotating drum, pitched longitudinally about 2.9 mm per meter (3/8 inch per foot), with the wet coal particles introduced at one end of the drum and the dried coal discharged from the other. Either heated air or hot combustion gases may be used to dry the coal, and the flow of the air or gases may be either with or counter to the flow of the coal. The air or gases may or may not come in direct contact with the wet coal.

Screen-Type Driers--

Manufacturers of screen-type driers claim that this type of drier has an additional advantage over other types: a considerable amount of excess water is disposed of mechanically within the machine by applying gas pressure alternately to each screen section. The gas pressure is strong enough to clamp the coal to the screen deck during the cycle's suction phase and excess water is literally squeezed from the coal.

Screen-type drier operation--As its name implies, this type drier processes the wet coal on a screen while hot gases are passed either up or down through the particles. The mechanical squeezing action has an additional advantage: there is less tendency for the coal fines to be blown from the bed. The coal is exposed to the hot gases for approximately 50 seconds.

Suspension or Flash Driers--

The term "flash" is derived from the fact that the wet coal is continuously introduced into a column of high temperature gases and moisture removal is practically instantaneous. The system is based upon high inlet gas temperatures that can reach 649°C (1,200°F) and outlet gas temperatures of about 93°C (200°F). The high inlet temperature is possible because of the nature of flash drying and does not result in any change in coal characteristics.

Flash drier operation--The Flash Drier introduces wet coal continuously into a column of high temperature gases and the removal of any surface moisture is practically instantaneous. This is accomplished by the application of heat to the particles while they are transported in a turbulent stream of hot air. The coal particles are in contact with the hottest gases for approximately 0.5 seconds and in the gaseous stream for approximately 5 seconds. The temperature for inlet gases is approximately 650°C (1,200°F). Feed is introduced to the Flash Drier with a table, screw, or rotary star feeders.

Flash drier performance--Flotation froth containing 25 to 30 percent minus 0.07 mm (200 mesh) material can be reduced from 20 to 8 percent moisture content.

Recent Technology--

The Turbo-Drier is of particular importance because it can contain the inert nitrogen atmosphere that must be maintained during the drying process to prevent the occurrence of explosions or fires and preclude any deterioration of the coal particles. Oxygen content in the unit is decreased to three percent or less by totally sealing the unit in order for it to operate successfully under the dusty conditions caused by the finely ground coal.

Turbo-Drier operation--Wet coal is fed through the top of the unit onto a stack of rotating circular trays. The coal then moves continuously through the drier by being transferred from each tray to the one below via stationary wiper blades. The pile formed after each transfer is then leveled to increase surface area, which enhances the drying rate.

Turbo-Drier performance--Minus 0.25 mm (60 mesh) coal is dried at a rate of 114 kg/hr (250 lb/hr). The moisture content is reduced from 30 to 5 percent.

Indirect Heat Driers--

In indirect heat drying, the coal being processed never comes in contact with the heat transfer agent (usually hot oil, but sometimes steam or hot water). Indirect heat exchangers are usually jacketed conveyors - some have helix screws, while others are equipped with fins, paddles or discs. The thermal fluid circulates through both the jacket and the screws.

Among the advantages of indirect heat exchanging are:

- exact temperature control;
- effective drying in the fine size range;
- gentle agitation of the coal;
- minimum particle degradation;
- continuous mass flow;
- elimination of fire and explosion hazards;
- automatic control and simplicity of operation;
- relatively dust-free operation;
- reduced space requirements;
- operation under controlled atmosphere;
- conservation of power and energy;
- heat recovery and recycle;
- improved working conditions, and
- ease of insulation.

The disadvantages of indirect heat transfer are:

- requirement of a secondary heat transfer agent handling system (a steam boiler or hot oil heater); and
- relatively high initial cost.

Indirect heat drier operation--The continuous, hollow, helical screw flights are welded to a stempipe to accommodate the flow of the hot oil. The oil, preheated to about 900°C (1,650°F), first flows through a hollow shaft and then through the hollow screw flights, which act as a screw conveyor to dry as well as gently agitate, mix and advance the fine coal.

Indirect heat drier performance--A black water sludge filter cake was fed to an indirect drier at the rate of 34 kkg per hour (37.5 tons per hour). Moisture content of the feed was 20 percent; of the resultant discharge, 5 percent.

OIL AGGLOMERATION

The use of oil agglomeration in the dewatering of fine coal has attracted a great deal of interest. It is, perhaps, the only large scale, economic method presently available for recovering ultrafine particles [minus 0.04 mm (325 mesh)] from an aqueous slurry. This process, sometimes

called pelletizing with oil, is a reapplication of the principles used by the Trent bulk oil flotation process. The Trent process was tried at various times in the past without commercial success, principally because of (at that time) low market price of coal.

In general, oil agglomeration offers several possible benefits to operators of modern coal cleaning plants. Among these are:

- reduction of product moisture of the fine fraction from 20 to 10 percent and a 1 to 2 percent decrease in overall product moisture;
- the formation of low moisture, easily drained pellets, which eliminate dust problems in fine coal handling and transport;
- easy removal of deleterious clay and shale;
- a 2 to 3 percent increase , some estimate eight million tons annually , in overall yield from coal preparation plants; and
- substantial removal of environmentally hazardous heavy metals, such as mercury, arsenic and selenium, along with recovery of potentially valuable vanadium, from ultrafine coal.

On the negative side, the processes currently in use require relatively large amounts of oil, the supply and increasing cost of which makes economic feasibility prediction at least risky if not extremely speculative.

Laboratory tests were conducted in 1973 on six different U.S. and Canadian coals. The coals were wet ground as a slurry containing 40 to 50 percent solids and size distributions of 100 percent minus 0.07 mm (200 mesh) and 40 to 50 percent minus 0.044 mm (325 mesh) particles. Agglomeration was effected through addition of a light petroleum distillate and agitation for five minutes. The recovery in the agglomerates of the combustible content of the feed exceeded 90 percent in every case.

At present, three basic processes are in use, Trent, Convertol and Spherical.

The Trent Process

The bulk oil Trent Process was developed during World War I to remove ash from powdered coal. Large quantities of oil , 30 to 50 percent of the weight of the coal , are mixed with the coal/water/ash slurry. The oil and

coal particles form an agglomerate that sinks to the bottom of the mixing tank. The water and ash particles are drawn off, and the agglomerate is screened to drain off the excess water, thus reducing moisture content to 8 to 12 percent. The pellet is then subjected to a carbonizing process to produce easily handled, firm granules of coal.

The Convertol Process

More recently, the Convertol Process, which requires much less oil, was developed in Germany. Five to eight percent by weight of oil is spread over the coal surfaces. The Germans used a Palman-type mill to accomplish this, while in the U.S. a high-speed conditioner is used. The agglomerate formed was then dewatered either in a screen basket oscillating centrifuge (German) or a solid bowl centrifuge (U.S. Steel).

Pilot plant tests in the U.S. were short-lived because of dust control difficulties, the final product tended to become dusty as moisture evaporated from the filter cake. Even with oil consumption as low as five percent by weight, the cost of the recoverable, low (10 to 12 percent) moisture coal is high when compared to that of a usual cleaning plant froth flotation/vacuum filter/thermal drier circuit.

Spherical Agglomeration

A family of techniques, labeled Spherical Agglomeration Processes, has been developed by the National Research Council of Canada. These processes go a step further than the Convertol and Trent methods - oil consumption is reduced further to three percent by weight. The drained agglomerates are rolled into uniform size pellets on a balling disc with as much as 25 percent by weight additional oil being used as a binder. The pellets are then thermally dried to effect further moisture reduction. The resultant pellets contain only 8 to 12 percent moisture as compared to 18 percent or more for filter cake.

Full economic evaluation of this processing method has not yet been completed.

SECTION 6

COAL SLURRY SAMPLING

Fine coal cleaning involves the use of water as a washing and transport medium. In a coal preparation plant the fine coal slurry is transferred from one unit of operation to the next by pipes, each unit receiving slurry feed from one pipe and producing clean coal and refuse to be carried further by other pipes. The characteristics of the flow and the slurry from each of these pipes are vital to the optimum operational mode of each unit and the entire system. Samples from the slurry streams must be taken to obtain this information. If these samples are representative of the entire flow, then the performance of each unit can be evaluated and optimized.

The objective of this section is to summarize a compilation of available information on slurry sampling. This information has been gathered from literature references, vendor literature, types of systems in use, and industry information obtained through telephone contacts. Two of the systems have been selected by Pennsylvania Electric Co. to be evaluated and tested for their applicability to the fine coal slurry circuit at the Homer City Coal Preparation Plant.

SUMMARY OF SLURRY SAMPLING INFORMATION

The use of automatic samplers to obtain representative portions of a full stream of slurry is a relatively new technological development. In many cases where slurry pipelines have been used, a manual "grab" sample has been sufficient to obtain general information about the characteristics of the slurry.[1] Grab sampling is accomplished by simply opening a valve on the pipe and collecting the slurry in a container, by collecting the slurry from the end of the pipe as it empties into a reservoir, or by dipping directly into the reservoir of slurry as it is being mixed.

This might supply sufficient information about the product delivered by the pipe. However, when samples are needed to monitor process or unit operation performance it becomes necessary to sample the slurry in-line. This can best be done by a continuous or time interval automatic sampler. Some samplers continuously bleed slurry from the pumped stream, while others obtain a sample at a preselected time interval. These samples can then be analyzed on stream if auto-analyzers are available and practical or by collection and submission to an analytical laboratory.

Slurries are used in numerous mineral industries. A description of some slurry sampling and in-line sample analysis methods follows:

The Joy/Denver Sampler

The Joy/Denver coal slurry sampler provides a sample cut across the slurry stream diameter. The sampler mechanism is totally enclosed and has a movable blade with an adjustable slit, enabling control of the amount of slurry gathered. At preset variable time intervals the blade travels across the slurry stream, perpendicular to the flow, gathering material from all points across the diameter of the flow. Sampling time intervals can be set in one minute increments from 2 to 60 minutes.[2]

The McGraw Sampler

The McGraw sampler was designed by Ray McGraw, Plant Manager of the PENELEC Homer City Coal Preparation Plant. The McGraw sampler takes a full-stream cut of the slurry. The cutter is a 13 cm. (5 in.) diameter chute which travels across a 10 cm. (4 in.) diameter stream. This effects full slurry flow collection when the cutter is at the midpoint of travel and partial flow collection as the cutter is entering and leaving the stream.

These two samplers will be installed in a fine coal circuit and will be evaluated and tested for bias and applicability in the Homer City Coal Preparation Plant.[3]

OTHER SAMPLERS AND SAMPLING SYSTEMS

The Miltronics, Ltd. Continuous In-Line Sampler

The sampling device invented by Miltronics, Ltd. of Peterborough, Ontario, differs markedly from other sampling concepts. Simple in design,

the sampler unit consists essentially of a narrow slot, continuously rotating about an axis parallel to the flow of the slurry. The kinetic energy of the stream causes a portion of the stream to flow through the sampling slot and be discharged through a hollow shaft. Total sample flow is a function of such conditions as the slurry velocity, the relative areas of the sampling slot and pipe, the back pressure developed at the discharge spigot, and the pressure in the pipeline. For truly representative sampling, the velocity of slurry through the sampling slot must be maintained equal to the mean fluid velocity in the pipeline; this is easily accomplished by installing a restricting valve in the discharge pipe to allow regulation of the sample flow.[4]

The Monsanto Phosphate Rock Slurry Composite Sampler

The following is a description of an innovative use of a sampler to obtain a composite sample at a phosphate rock slurry processing plant. A small pipe with a 90° elbow is installed in the line. The sample flow produces a continuous slipstream, and the other end of the tube is attached by flexible hose to the arm of a clarifier which turns in a circular motion. There are several sample buckets placed in the path of the clarifier arm. These buckets catch the sample as the stream intermittently passes over them.[5]

The International Nickel Company of Canada; On-Line Sampling and Analysis

An automatic sampling and analysis system is now being used at the Frood Stobie Mill.

Samples of flotation feed, concentrate and tailings are taken for continuous on-line x-ray analyses and to provide an 8-hour shift composite for analysis by wet chemical methods.

All pulp samples are obtained by either horizontal or vertical automatic cutters, depending on whether the slurry stream is carried in a launder or a pipe. The timing cycle on the cutters may vary from eight seconds to continuous to give a sample flow of approximately 30 liters/min (8 gpm).[6]

The Outokumpu Courier 300 On-Stream Analysis System

The Courier 300 on-stream analysis system was developed by and is in use at the Outokumpu Company in Finland. The primary sampler is a continuously operating full stream cutter which diverts material to as many as fourteen secondary samplers. Continuous full stream cuts from the secondary sampler are automatically analyzed and then returned to the process flow. The end of the return flow tube is piston controlled and deposits timed samples into containers for shift and 24-hour analysis.[7]

BIAS TEST PLAN FOR TWO SLURRY SAMPLERS AT HOMER CITY COAL PREPARATION PLANT

The Joy/Denver and the McGraw automatic slurry samplers will be incorporated on the fine coal circuit of the GPU/PENELEC Homer City Coal Preparation Plant for mechanical bias testing.

Two operations will be conducted simultaneously for each sampler based on equal number of cuts and equal volumes of samples obtained.

(1) Collecting and processing a primary bias cut (sampler sample); and
(2) Obtaining a comparison sample by taking and processing a full width cut to obtain a total coal population sample.

The parameters used in determining bias will be established by statistical comparison of those from the sampler cuts with the variability characteristics of the full stream. Then size analysis and proximate analysis on the bias cut samples will provide the basis for the statistical development of the bias data for each sampler.

SECTION 6

REFERENCES

1. Aude, T.C., and N.T. Cowper, T.L. Thompson, E.J. Wasp, "Slurry Piping Systems: Trends, Design Methods, Guidelines", Chemical Engineering, Vol. 78, No. 15, June 28, 1971.

2. Joy Manufacturing Company, Denver Equipment Division, "Samplers" Specification Manual S1-B14B.

3. McGraw, R., Personal Communication, PENELEC, Homer City Coal Preparation Plant.

4. Osborne, B.F., "Continuous, In-Line Sampler for Slurry Systems Developed in Canada", Engineering and Mining Journal, Sept. 1971, pp 146-148.

5. Mullins, M., Personal Communication, Monsanto-Columbia, Tennessee Phosphate Rock Slurry Processing.

6. Fowler, H.B., and K.R. Kay, L. Kolpien, "Process Instrumentation and Control at Frood-Stobie Mill", Canadian Mining Journal, Vol. 92, No. 6, June 1971, pp 49-50, 52-54, 56.

7. Leppala, A., and J. Koskinen, T. Leskinen, P. Vanninen. "Courier 300 On-Stream Analysis System", Transactions of The American Institute of Mining, Metallurgical, and Petroleum Engineers (Incorporated) Vol. 250, Society of Mining Engineers of AIME 1971.

SECTION 7

COAL PREPARATION REQUIREMENTS FOR SYNTHETIC FUEL CONVERSION PROCESSES

Preparation of feed coal for synthetic fuel conversion plants uses similar techniques for the various processes with various methods depending on the process. All approaches use conventional mechanical equipment. However, equipment selected differs somewhat from that used in conventional coal preparation plants because the particle size distribution must be closely controlled. Particle size control also requires close coordination between mine and plant.

Coal preparation techniques are used to change the following characteristics of coal to the required coal feed parameters for coal gasification or liquefaction processes:

- The size distribution and mean particle size;
- The total moisture content;
- The ash content;
- The sulfur content; and
- The heating value.

Each of these parameters will have some bearing not only on the economics of the coal conversion process, but also on the type of process selected for the particular coal.

PARTICLE SIZE

Coal gasification processes utilize three types of reactor configurations: fixed bed, fluid bed, and entrained bed systems.

The pyrolytic liquefaction processes have the same constraints on particle size as the various gasification processes, since they basically utilize the same three types of reactors. The liquefaction processes that require dissolution of the coal into a process derived solvent normally

require a finely ground coal that can be readily dissolved

The fixed bed processes require the most stringent particle size requirements, because the amount of fines going to the reactor must be minimized. Generally, these processes require a coal particle size in the range of 38 by 3 mm. (1-1/2 by 1/8 in.). The particle size distribution determines the distribution of gases and steam through the coal bed. With this type of reactor, particle size and distribution are critical factors, since channeling gives incomplete gasification and lower thermal efficiencies.

With this type of reactor, particular attention must be given to the design of the materials handling and coal preparation equipment so that good size distribution is maintained.

Fines can be minimized or kept to acceptable levels by:

- The use of minimum degradation type coal storage facilities prior to gasification, or the use of anti-degradation devices with more conventional storage facilities;
- The careful design of conveying systems, particularly where there are long hauls by the conveyor. The design must minimize the degradation of the coal caused by transfer points from one conveyor to another, and also the degradation caused by continuous flexing of the belt;
- The proper selection of crushing equipment to maximize the production of crushed coal in the 38 by 3 mm (1-1/2 by 1/8 inch) size range. This crusher selection will vary according to the characteristics of the particular coal in question; and
- The proper selection and sizing of the screening equipment. Because excessive fine material in the gasifier feed will lead to channeling, the screening must be of the highest possible efficiency. This might necessitate wet screening techniques, which would require moisture reduction prior to gasification.

Fine coal, minus 3 mm. (1/8 in.), could be briquetted to give a particle size suitable for conversion. This procedure would involve further grinding of the fine coal to give a size distribution suitable for a briquetting process. This process could utilize some of the non-marketable by-products from gasification as a binder to give a stable briquet.

The fluid bed reactor requires a less stringent particle size requirement than the fixed bed type, but the fluid bed type reactor has other constraints. While the fluid bed reactor is not as adverse to accepting fine particles, it is mandatory that a uniform size distribution of the coal feed be maintained at all times. If this is not achieved, the fluid bed becomes unstable, affecting the gasification reactions. A large percentage of any one particle size within the stated size range could have an adverse effect on the fluid bed operation.

Coal preparation techniques will assist by:

- Maintaining the desired size range; and
- Maintaining the desired size distribution.

These are achieved by proper materials handling techniques combined with the proper selection of the screening and crushing system. A stage crushing system will screen out properly sized material before ach stage of crushing and will minimize the production of unwanted fines.

The entrained bed reactor requires less stringent particle size requirements than the other two types of reactors. Because the size requirement for this system is normally very fine, such as 70 percent minus 0.074 mm. (200 mesh); closed circuit mineral crushing and grinding techniques can be used to provide the material.

TOTAL MOISTURE CONTENT

The total moisture content of the coal can affect the overall thermal efficiency of the gasification process. In some types of units water is vaporized in the reactor, and this requires energy in the form of heat. The heat is obtained from increased consumption of coal and increased oxygen requirements to sustain the exothermic portion of the chemical reaction.

Although water is required for the gasification reaction to give the necessary source of hydrogen, steam from external sources is usually a more economical means of meeting this requirement since it contributes to the exothermal heat requirements and reduces process oxygen requirements. The capital costs of an oxygen plant can be as high as 20 percent of the total costs of the overall plant, therefore, reducing oxygen requirements can have significant economic effects.

Some types of processes state a maximum feed coal total moisture content of 25 percent, but these units have operated on brown coals with moisture as high as 40 percent. Certain other processes utilize high pressure pumping of a thickened coal water slurry into the gasification system.

The moisture content of the coal, can affect screening efficiency, particularly if the free moisture of the coal increases above an average of five percent. The result is reduced screening efficiency with excessive fines.

Coal preparation and materials handling techniques can be utilized for the control of moisture, as follows:

- The use of conventional coal dewatering equipment such as screens, cyclones, filters and centrifuges for moisture reduction;
- The use of conventional filtration equipment for fine coal, ranging from vacuum to pressure filtration; and
- The use of thermal drying techniques ranging from indirect to direct heat drying units, to reduce surface moisture.

Because any means of removing moisture from coal tends to be a relatively costly operation, a trade-off study should be performed to determine the optimum amount of moisture reduction with respect to cost, that should be attained prior to gasification.

The characteristic high moisture content of some coals such as lignites and sub-bituminous coals presents a problem to the coal preparation engineer if moisture reduction is required. Because of the relatively high

temperatures and residence times required, a suitable method of drying this type of coal still has to be demonstrated on a commercial scale.

ASH CONTENT

The ash content of a coal feed has a significant effect on the overall thermal efficiency of the process. The inert material must be heated to the reaction temperature, which requires combustion of coal with the related oxygen demand in the case of gasification processes. The total sensible heat is not recovered from the ash before it is discharged from the reactor; therefore, there is a loss of thermal efficiency. Also, because of the physical material handling problems of the ash within the reactor system, a decrease in the ash content of the coal can affect either the sizing or number of gasifier reactors required. With the fixed bed reactor, the physical size of the reactor is decreased, whereas with the fluid bed reactor, the number of gasifiers required is decreased, and lower volumes of circulating gases are needed to maintain fluidization.

Several gasification processes utilize partial gasification to produce a solid product in conjunction with the gas. This char is intended to be burned for power generation in a conventional manner. Therefore, the ash content of the char will have to meet certain specifications. Research and development presently being conducted to utilize low ash char by conversion to hydrogen for process use will require a controlled feed coal of relatively low ash content to produce a suitable char.

Coal preparation techniques will assist in ash control by such suitable methods of beneficiation as:

- Wet jig type processes for coals down to a nominal 1 mm (8 mesh) size;
- Heavy media separation processes for coals having a nominal top size of 1/2 mm (20 mesh) size;
- Hydrocyclone separations for fine coals; and
- Froth flotation for fine coals.

Coal beneficiation can give the most significant upgrading benefit to the gasification processes that require a finely ground coal, e.g., minus 100 mesh. With this fine grind, a high percentage of the finely disseminated

ash or refuse material is liberated and is therefore in an ideal state for separation. Capital and operating costs for fine coal beneficiation are far in excess of coarse coal systems, and a detailed cost benefit analysis must be performed for each case.

One other coal preparation technique that may prove beneficial to the gasification process is the adjustment of the ash-fusion temperatures. This factor could become very significant with the slagging processes and could be achieved by adding such fluxes as lime.

SULFUR CONTENT

The sulfur content of the feed coal directly affects the capital and operating costs of the synthetic fuel conversion process. As the sulfur content of the coal increases, the sulfur content in the resulting synthetic fuel also increases. The sulfur removal processing units immediately following the reactors depend on the gas flow, sulfur concentration and the type of sulfur compound. The conversion of the sulfur compounds to elemental sulfur depends on sulfur content of the stream. Also by-product credit for elemental sulfur becomes questionable because of a traditionally unstable world market for sulfur.

The sulfur content of the feed coal also influences the overall efficiency of the gasification process. This relation is due to the reaction between the sulfur and process hydrogen to form hydrogen sulfide in the gasifier. The process hydrogen can be used more efficiently in the overall process for methanation.

In the char producing processes, sulfur content becomes very significant since the char is burned in a conventional manner for steam raising purposes. Sulfur removal from a flue gas is a costly process, therefore, more emphasis should be placed upon sulfur removal from coals prior to combustion.

HEATING VALUE

As the heating value of the coal increases, potential yield of gas per unit weight of the coal also increases. Therefore, for a gasification plant constructed to produce a fixed volume of specified gas, the reactor requirements will change with changes in the heating value

of the feed coal. As the heating value increases, the reactor volume required is reduced, and the associated plant capital and operating costs are reduced.

There is an inverse relationship, although not proportional, between the ash and heating value of a coal. If a bituminous coal is being considered, the heating value of the coal increases as the ash content of the coal decreases. If the ash content of the coal is reduced, this will bring about an increase in the heating value of the coal.

Certain gasification processes have quite stringent tolerances for the day-to-day variation of the feed coal. For example, the Lurgi process specifies a coal with a maximum variation of ± 63 kg cal (250 BTU). As the heating value varies, the oxygen consumption also varies, and to accommodate the heating value variation, the coal tonnage feed rate must be varied. Large deviations in coal feed rate causes excessive temperature fluctuations leading to clinker formation and other problems. Other types of reactors may require even more stringent tolerances than those already mentioned. The reaction in a fluid bed reactor becomes very unstable as the heating value of the feed coal varies.

Because the heating value of any coal is likely to exceed the previously mentioned tolerance within the same coal seam, or between different seams, coal preparation must be used to stabilize these tolerances. The beneficiation process alone may be sufficient to give the required control. If not, then some form of blending of the various types of coal is used.

EFFECT OF COAL BENEFICIATION ON COAL CONVERSION AND UTILIZATION

An experimental program entitled "Effects of Coal Beneficiation on Coal Conversion and Utilization" was initiated at the Department of Energy Pittsburgh Energy Research Center in FY 1977. This is an initial step in a broad ranging program to evaluate the impact of coal beneficiation, both physical and chemical, upon technologies for gasification, liquefaction, and fluidized-bed combustion of coal.

The objective of the program is to determine whether coal beneficiation, by removing sulfur or other mineral matter, has beneficial or adverse effects

on coal conversion to liquids and gases and on fluidized-bed combustion; that is, whether a coal conversion or utilization facility designed to use a particular coal should include cleaning of the coal as part of the optimum design.

The program is planned will evaluate the overall impacts of the combination of coal beneficiation with conversion and utilization of coal. In coal liquefaction, for example, mineral matter present in a specific coal could affect the liquefaction process in several ways. Some evidence indicates that coal pyrite catalyzes coal liquefaction. Workers at several laboratories including the Pittsburgh Energy Research Center, are studying this hypothesis. Some trace elements may also act as catalysts. On the other hand, mineral matter in coal (1) decreases the throughput of organic matter in the conversion reactor by increasing the total amount of material processed for a given amount of product, (2) increases the process heat requirements, (3) complicates downstream purification and solids separation or increases the ash content of the product, and (4) may poison conventional hydro-desulfurization and shift conversion catalysts. The trade-offs of identified advantages and disadvantages of coal beneficiation is yet to be established.

SUMMARY OF COAL PREPARATION REQUIREMENTS FOR COMMERCIAL AND FEDERAL GOVERNMENT SPONSORED SYNTHETIC FUEL PROCESSES.

Tables 13 through 15 summarize the current status of coal preparation requirements for major synthetic fuel processes.

TABLE 13. SUMMARY STATUS OF COAL PREPARATION FOR HIGH BTU GASIFICATION PROCESSES [1]

PROCESS	CONTRACTOR(S)/ DEVELOPERS	PLANT TYPE AND STATUS	PLANT SIZE Metric tons/day (tons/day)	PLANT LOCATION	COAL TYPE(S)/ SOURCE(S)	PREPARATION - (FINAL SIZE/ MOISTURE CONTENT)
CO_2 Acceptor	Conoco Coal Development Co., Library, Pa.	Pilot Plant (operation)	35 (40)	Rapid City, South Dakota	Wyodak Subbituminous, Glenharold lignite, Velvo lignite, Husky char (lignite, subbituminous)	Crushed to 2.4 x 0.15 mm (8 x 100 mesh), in a hot-gas-swept impact mill and flash dried to 3-5 wt. % H_2O
BI-GAS	Bituminous Coal Research, Inc., Monroeville, Pa.	Pilot Plant (operation)	110 (120)	Homer City, Pennsylvania	All, for greatest yield - N.D. lignite, Wyoming subbituminous C coal, Pa. high volatile A bituminous coal, Western Ky. coal No. 11	Crushed to minus 38 mm (1 1/2 in) washed, screened & pulverized to 70% minus 0.074 mm (200 mesh). Dried to 1.3% moisture
HYGAS	Institute of Gas Technology, Chicago, Ill.	Pilot Plant (operation)	68 (75)	Chicago, Ill.	All, Illinois No. 6 bituminous coal to be tested, Montana Rosebud seam, subbituminous	Crushed to minus 2.4 mm (8 mesh)
Agglomerating Burner	Battelle Memorial Institute, Columbus Laboratories, Columbus, Ohio	Process Development Unit (last phase)	23 (25)	West Jefferson, Ohio	All, Pittsburgh No. 8, subbituminous from Lake DeSmet, Wyoming, from Ohio Clarion	Crushed/separated 2.4 x 0.15 mm (8 + 100 mesh) and 0.15 mm x 0 (100 mesh x 0)
Synthane	The Lummus Co., Bloomfield, N.J.	Pilot Plant	68 (75)	Allegheny County, Pennsylvania	All, Rosebud Coal	Crushed to minus 0.84 mm (20 mesh), dried.
COGAS	COGAS Development Co., Princeton, N.J.	Demonstration Plant (operation)	45 (50)	Leatherhead, England	All	Crushed to minus 0.074 mm (200 mesh)

TABLE 14. SUMMARY STATUS OF COAL PREPARATION FOR LOW BTU GASIFICATION PROCESSES [3]

PROCESS	CONTRACTOR(S)/ DEVELOPER(S)	PLANT TYPE AND STATUS	PLANT SIZE METRIC tons/day (tons/day)	PLANT LOCATION	COAL TYPE(S)/ SOURCE(S)	PREPARATION - (FINAL SIZE/ MOISTURE CONTENT)
Wellman-Galusha	McDowell Wellman Engineering Company, Cleveland, Ohio	Commercial Unit	9 metric tons tons/hour (1 ton/hour)	N.C.	Bituminous, Anthracite, Charcoal and Coke	Crushed and sized to 14.3 x 7.9 mm (9/16 x 5/16 in.) for anthracite, 51 x 26 mm (2 x 1 in.) for bituminous
Winkler	Davey Powergas Lakeland, Florida	Commercial Unit	5,800 (6,400)	Largest in Madras, India; none in U.S.	Lignite, subbituminous, bituminous	Crushed and sized to minus 8 mm (5/16 in.) dried
Chapman (Wilputte) Gasifier	Wilputte Corp. Murray Hill, N.J.	Commercial Unit	*	Kingsport, Tenn.	All; lignite	Crushed and sized to minus 100 mm (4 in.)
Riley Morgan	Riley Stoker Corp. Worcester, Mass.	Pilot Plant (operation)	*	Worcester, Mass.	Anthracite, bituminous, caking bituminous	Crushed and sized 51 x 3.2 mm (2 x 1/8 in.)
Koppers-Totzek	Koppers Co., Inc. Pittsburgh, Pa.	Commercial Unit	Up to 770 (850)	Largest unit in Johannesburgh, South Africa	Bituminous, all	Crushed and sized to 70% minus 0.074 mm (200 mesh), dried to 1-8% moisture
GFERC Slagging Gasifier	GFERC Grand Forks, North Dakota	Pilot Plant (operation)	*	Grand Forks, N.D.	Bituminous char, lignite char and lignite	Crushed and sized to 19 x 6.4 mm (3/4 x 1/4 in.) dried to less than 35% moisture
Texaco Gasifier	Texaco Development Corp. New York, N.Y.	Pilot Plant (operation)	*	Montebello, California	Lignite, bituminous	Crushed and sized to 70% minus 0.074 mm (200 mesh); slurried

(CONTINUED)

TABLE 14. (CONTINUED)

PROCESS	CONTRACTOR(S)/ DEVELOPER(S)	PLANT TYPE AND STATUS	PLANT SIZE Metric tons/day (tons/day)	PLANT LOCATION	COAL TYPE(S)/ SOURCE(S)	PREPARATION - (FINAL SIZE/ MOISTURE CONTENT)
Coalex	Inex Resources, Inc., Lakewood, Colorado	Pilot Plant (operation)	0.63×10^6 Kg cal/hr. (2.5×10^6 BTU/hr)	Wheat Ridge, Colorado	All (lignite has not been tested)	Crushed to minus 0.074 mm (200 mesh)
Molten Salt	Rockwell International, Canoga Park, California	Process Development Unit (design)	23 (25)	Santa Susana, California	All	Crushed to minus 1.4 mm (12 mesh)
Advanced Coal Gasification for Electric Power Generation (Two-Stage Pressurized Fluid Bed)	Westinghouse Electric Corp. Lester, Pa.	Process Development Unit (operation)	11 (12)	Waltz Mill, Pennsylvania	All	Crushed to 3.4 x 0.15 mm (6 x 100 mesh)
Low BTU Gasification for Electricity Generation (CE Atmospheric Entrained Bed Gasifier)	Combustion Engineering, Inc., Windsor, Conn.	Pilot Plant (operation)	110 (120)	Windsor, Conn.	All	Crushed to minus 0.074 mm (200 mesh)
Woodall-Duckham	Woodall-Duckham, Ltd., Pittsburgh, Pennsylvania	Commercial Unit	90 - 110 (100 - 120)	N.C.	Lignite, bituminous	Crushed to 36.1 x 6.4 mm (1 1/2 x 1/4 in.)
Lurgi Pressure Gasifier	GFERC	Pilot Plant (operation)	*	Grand Forks, North Dakota	Lignite, subbituminous and anthracite	Crushed and sized to 38 x 3.2 mm (1 1/2 x 1/8 in.) dried to less than 35% moisture

* Information being sought.

TABLE 15. SUMMARY STATUS OF COAL PREPARATION FOR LIQUEFACTION PROCESSES[a]

PROCESS	CONTRACTOR(S)/ DEVELOPERS	PLANT TYPE AND STATUS	PLANT SIZE Metric tons/day (tons/day)	PLANT LOCATION	COAL TYPE(S)/ SOURCE(S)	PREPARATION - (FINAL SIZE/ MOISTURE CONTENT)
Solvent Refined Coal	Pittsburgh & Midway Coal Mining Company, Merriam, Kansas	Pilot Plant (operation) (converting to SRC II and back to SRC I)	45 (50)	Tacoma, Washington	All	Crushed to 0.074 mm (200 mesh) dried to 1-3% moisture
H-Coal	Hydrocarbon Research, Inc., Trenton, N.J.	Pilot Plant (construction)	540 (600)	Catlettsburgh, Kentucky	All	Crushed to minus 18 mm (3/4 in.) dried to 4% moisture. Crushed to minus 0.25 mm (60 mesh)
Clean Coke	U.S. Steel Pittsburgh, Pa.	Process Development Unit (operation)	0.45 (0.5)	Pittsburgh, Pennsylvania	Bituminous; Western Kentucky and Pittsburgh seam coals	R.O.M. coal is dried and crushed.
Zinc Chloride Catalyst	Conoco Coal Development Co., Liberty, Pa.	Process Development Unit (early start-up)	.9 (1)	Liberty, Pennsylvania	All; Colstrip subbituminous; or SRC	Dried, crushed and slurried
Donor Solvent	Exxon Research and Engineering Co., Baytown, Texas	Pilot Plant (design)	230 (250)	Baytown, Texas	All; lignite, Wyoming subbituminous, Illinois No. 6 bituminous, North Dakota lignite, Wyodak	Dried, crushed and sized to minus 0.5 mm (30 mesh) then slurried

SECTION 7

REFERENCES

1. Energy Research and Development Administration Coal Gasification, Quarterly Reports 1975-1977.

2. Bloom, Ralph, Jr. The Illinois Coal Gasification Group Project Incorporating the COGAS Process. Presented at the Eight Synthetic Pipeline Gas Symposium. COGAS Development Co. Princeton, New Jersey, 1976.

3. Cavanaugh E.C. et.al. Technology Status Report: Low/Medium BTU Coal Gasification and Related Environmental Controls. Volume II, Radian Corporation, Austin, Texas, June 1977.

4. Energy Research and Development Administration Coal Liquefaction, Quarterly Reports 1975-1977.

TABLE 16

METRIC UNITS

CONVERSION TABLE

Multiply (English Units)		by	To obtain (Metric Units)	
ENGLISH UNIT	ABBREVIATION	CONVERSION	ABBREVIATION	METRIC UNIT
acre	ac	0.405	ha	hectares
acre - feet	ac ft	1233.5	cu m	cubic meters
British Thermal Unit	BTU	0.252	kg cal	kilogram - calories
British Thermal Unit/pound	BTU/lb	0.555	kg cal/kg	kilogram calories/kilogram
cubic feet/minute	cfm	0.028	cu m/min	cubic meters/minute
cubic feet/second	cfs	1.7	cu m/min	cubic meters/minute
cubic feet	cu ft	0.028	cu m	cubic meters
cubic feet	cu ft	28.32	l	liters
cubic inches	cu in	16.39	cu cm	cubic centimeters
degree Fahrenheit	F	0.555 (°F-32)*	°C	degree Centigrade
feet	ft	0.3048	m	meters
gallon	gal	3.785	l	liters
gallon/minute	gpm	0.0631	l/sec	liters/second
horsepower	hp	0.7457	kw	kilowatts
inches	in	2.54	cm	centimeters
inches of mercury	in Hg	0.03342	atm	atmospheres
pounds	lb	0.454	kg	kilograms
million gallons/day	mgd	3,785	cu m/day	cubic meters/day
mile	mi	1.609	km	kilometer
pound/square inch (gauge)	psig	(0.06805 psig +1)*	atm	atmospheres (absolute)
square feet	sq ft	0.0929	sq m	square meters
square inches	sq in	6.452	sq cm	square centimeters
tons (short)	t	0.907	kkg	metric tons (1000 kilograms)
yard	y	0.9144	m	meters

*Actual conversion, not a multiplier

TECHNICAL REPORT DATA
(Please read Instructions on the reverse before completing)

1. REPORT NO. EPA-600/7-78-150	2.	3. RECIPIENT'S ACCESSION NO.
4. TITLE AND SUBTITLE Assessment of Coal Cleaning Technology: First Annual Report		5. REPORT DATE July 1978
		6. PERFORMING ORGANIZATION CODE
7. AUTHOR(S) Lee C. McCandless and Robert B. Shaver		8. PERFORMING ORGANIZATION REPORT NO.
9. PERFORMING ORGANIZATION NAME AND ADDRESS Versar, Inc. 6621 Electronic Drive Springfield, Virginia 22151		10. PROGRAM ELEMENT NO. EHE624A
		11. CONTRACT/GRANT NO. 68-02-2199
12. SPONSORING AGENCY NAME AND ADDRESS EPA, Office of Research and Development Industrial Environmental Research Laboratory Research Triangle Park, NC 27711		13. TYPE OF REPORT AND PERIOD COVERED Annual; 1/77-1/78
		14. SPONSORING AGENCY CODE EPA/600/13

15. SUPPLEMENTARY NOTES IERL-RTP project officer is James D. Kilgroe, Mail Drop 61, 919/541-2851.

16. ABSTRACT The report gives results to date of a continuing assessment of coal cleaning technology. It discusses: (1) washability characteristics of coal, with emphasis on the correlations of various washability parameters; (2) current technology on coal comminution and gravity separation processes; (3) 11 major chemical coal cleaning processes, including evaluations and comparisons; (4) current technology on mechanical and thermal drying and oil agglomeration; (5) slurry sampling techniques, including a summary of a Bias Test Plan for two slurry samplers; and (6) coal preparation requirements for synthetic fuel conversion processes, in terms of particle size, moisture, ash, sulfur, and heating value. In addition, coal preparation requirements for 6 high-Btu gasification processes, 13 low-Btu gasification processes, and 5 liquefaction processes are summarized.

17. KEY WORDS AND DOCUMENT ANALYSIS

a. DESCRIPTORS		b. IDENTIFIERS/OPEN ENDED TERMS	c. COSATI Field/Group	
Pollution	Oils	Pollution Control	13B	11H
Coal	Agglomeration	Stationary Sources	21D	
Coal Preparation	Slurries	Coal Cleaning	08I	11G
Assessments	Sampling	Washability	14B	
Comminution	Fuels	Gravity Separation	13H, 07A	
Separation	Gasification	Synthetic Fuels		
Dewatering	Liquefaction			07D

18. DISTRIBUTION STATEMENT Unlimited	19. SECURITY CLASS (This Report) Unclassified	21. NO. OF PAGES 161
	20. SECURITY CLASS (This page) Unclassified	22. PRICE

EPA Form 2220-1 (9-73)