United States
Environmental Protection
Agency

Industrial Environmental Research
Laboratory
Research Triangle Park NC 27711

EPA-600/7-79-073g
December 1979

EPA

Environmental Assessment of Coal Cleaning Processes: Second Annual Report

Interagency Energy/Environment R&D Program Report

RESEARCH REPORTING SERIES

Research reports of the Office of Research and Development, U.S. Environmental Protection Agency, have been grouped into nine series. These nine broad categories were established to facilitate further development and application of environmental technology. Elimination of traditional grouping was consciously planned to foster technology transfer and a maximum interface in related fields. The nine series are:

1. Environmental Health Effects Research
2. Environmental Protection Technology
3. Ecological Research
4. Environmental Monitoring
5. Socioeconomic Environmental Studies
6. Scientific and Technical Assessment Reports (STAR)
7. Interagency Energy-Environment Research and Development
8. "Special" Reports
9. Miscellaneous Reports

This report has been assigned to the INTERAGENCY ENERGY-ENVIRONMENT RESEARCH AND DEVELOPMENT series. Reports in this series result from the effort funded under the 17-agency Federal Energy/Environment Research and Development Program. These studies relate to EPA's mission to protect the public health and welfare from adverse effects of pollutants associated with energy systems. The goal of the Program is to assure the rapid development of domestic energy supplies in an environmentally-compatible manner by providing the necessary environmental data and control technology. Investigations include analyses of the transport of energy-related pollutants and their health and ecological effects; assessments of, and development of, control technologies for energy systems; and integrated assessments of a wide range of energy-related environmental issues.

EPA REVIEW NOTICE

This report has been reviewed by the participating Federal Agencies, and approved for publication. Approval does not signify that the contents necessarily reflect the views and policies of the Government, nor does mention of trade names or commercial products constitute endorsement or recommendation for use.

This document is available to the public through the National Technical Information Service, Springfield, Virginia 22161.

EPA-600/7-79-073g

December 1979

Environmental Assessment of Coal Cleaning Processes: Second Annual Report

by

A. W. Lemmon, Jr., G. L. Robinson,
P. Van Voris, and S. E. Rogers

Battelle Memorial Institute
Columbus Laboratories
505 King Avenue
Columbus, Ohio 43201

Contract No. 68-02-2163
Program Element No. EHE623A

EPA Project Officer: James D. Kilgroe

Industrial Environmental Research Laboratory
Office of Environmental Engineering and Technology
Research Triangle Park, NC 27711

Prepared for

U.S. ENVIRONMENTAL PROTECTION AGENCY
Office of Research and Development
Washington, DC 20460

FOREWORD

Many elements and chemical compounds are known to be toxic to man and other biological species. However, our knowledge concerning the levels and conditions under which these substances are toxic is extremely limited. Little is known concerning the emission of these pollutants from industrial processes and the mechanisms by which they are transported, transformed, dispersed, or accumulated in our environment.

Portions of the Federal Clean Air Act, the Resource Conservation Recovery Act, and the Federal Water Pollution Control Act require the U.S. Environmental Protection Agency (EPA) to identify and regulate hazardous or toxic substances which result from man's industrial activities. Industrial pollutants often are identified only after harmful health or ecological effects are noted. Remedial actions are costly, the damage to human and other biological populations often is irreversible, and the persistence of some environmental contaminants may endanger future populations.

EPA's Office of Research and Development (ORD) is responsible for health and ecological research, studies concerning the transportation and fate of pollutants, and the development of technologies for controlling industrial pollutants. The Industrial Environmental Research Laboratory, (IERL/RTP), an ORD organization, is responsible for development of pollution control technology and conducts a large environmental assessment program. The primary objectives of this program are:

- The development of information on the quantities of toxic pollutants emitted from various industrial processes--information needed to prioritize health and ecological research efforts.

- The identification of industrial pollutant emissions which pose a clearly evident health or ecological risk and which should be regulated.

- The evaluation and development of technologies for controlling pollution from these toxic substances.

The coal cleaning environmental assessment program has as its specific objectives the evaluation of pollution control problems which are unique to coal preparation, storage, and transportation. This report is a summary of the work performed on this program during the period of October 1, 1977, through November 17, 1978.

TABLE OF CONTENTS

Page

FOREWORD ii

LIST OF FIGURES v

LIST OF TABLES v

ACKNOWLEDGMENTS vi

INTRODUCTION 1

SYSTEMS STUDIES 2

Technology Overview 2

Detailed Process Descriptions 3

Development of Environmental Assessment Criteria 3

Pollution Control Trade-Off Studies Planning 7

DATA ACQUISITION 14

Selection of Test Sites 14

Sampling and Analytical Techniques 17

Source Test Program 18

Site Category 1 Test Plan 20

GENERAL PROGRAM SUPPORT 21

Homer City Power Complex Testing 23

Modification of Computer Models for Evaluating Process Technology 25

Coal Cleaning Information Center 27

TABLE OF CONTENTS
(Continued)

Page

US/USSR Technical Exchange Activity on the Environmental Consequences of Coal Utilization 29

Coal Cleaning As An SO_2 Emission Control Strategy and Barriers to Its Commercialization 32

Reserve Processing Assessment Model 46

A Major National Symposium on Coal Cleaning 49

List of Papers at Coal Cleaning Symposium Prepared by Battelle Staff 51

Reports and Other Documents Prepared or in Preparation on U.S. Environmental Protection Agency Contract No. 68-02-2163 by Battelle's Columbus Laboratories 52

APPENDIX A. SYMPOSIUM PROGRAM 54

LIST OF FIGURES

Page

1. COMPARTMENTAL MODEL OF GENERIC ECOSYSTEM AND DOMINANT PATHWAYS OF POLLUTANT TRANSPORT 6

2. SCOPES OF COMPUTER PROGRAMS FOR TRADE-OFF STUDIES 10

3. BLOCK FLOW DIAGRAM OF GENERALIZED COAL PREPARATION PLANT AND ASSOCIATED FACILITIES SHOWING POTENTIAL SAMPLING LOCATIONS 19

4. GRAB SAMPLING LOCATIONS ASSOCIATED WITH THE INPUT, PRODUCT, AND WASTE STREAMS FROM THE HOMER CITY COAL CLEANING PLANT IN ITS FINAL CONFIGURATION 22

5. MAP OF THE HOMER CITY POWER COMPLEX 24

6. INCREASE IN THE QUANTITIES OF SIP-COMPLIANCE COAL ACHIEVABLE BY COAL CLEANING 35

LIST OF TABLES

Page

1. PROPOSED PRIORITY I POLLUTANTS FOR COAL CLEANING PROCESSES 4

2. CLASSIFICATION VARIABLES AND ASSOCIATED LEVELS USED TO DEFINE SITE CATEGORIES 15

3. FACTORIAL LISTING OF SITE CATEGORIES 15

4. SUMMARY OF POTENTIAL SAMPLING LOCATIONS BY SITE CATEGORY 16

5. PRODUCTION OF ELECTRIC POWER AND THE INSTALLED CAPACITY OF SOVIET AND U.S. GENERATING PLANTS 30

6. POSTULATED CONDITIONS OF AVAILABILITY 38

7. SUMMARY OF COSTS FOR A 500-MW COAL-BURNING POWER PLANT 39

8. SUMMARY OF COSTS FOR POWER GENERATION USING VARIOUS CONTROL MODES USING VARIOUS CONTROL MODES 41

ACKNOWLEDGMENTS

Although this second annual report was primarily written by the stated authors, major writing contributions were also made by Frederick K. Goodman, Elton H. Hall, Jane H. McCreery, G. Ray Smithson, Jr., and Duane A. Tolle. Other researchers have made significant contributions to the program during the period covered by this report. These include David P. Ambrose, Wayne E. Ballantyne, Steven A. Barker, Richard E. Barrett, Donald P. Brown, Bruce E. Buxton, Ronald Clark, Robert L. Cofer, Barney W. Cornaby, Linda M. Curran, Robert A. Ewing, Henry M. Grotta, R. E. Heffelfinger, Robert D. Igou, Seongwoo Min, David W. Neuendorf, David A. Sharp, Shirley J. Smith, Michael R. Taafee, Ralph E. Thomas, Bruce W. Vigon, and Jon C. Zuck of the Battelle staff. Dr. G. E. Raines, Paul W. Spaite, and Dr. Harold L. Lovell, consultants to Battelle, also made significant contributions to the program. Mr. G. Ray Smithson, Jr., is the Program Manager, and Mr. Alexis W. Lemmon, Jr., is the Deputy Program Manager.

This study was conducted as a part of Battelle's Columbus Laboratories' program, "Environmental Assessment of Coal Cleaning Processes", which has been supported by the U.S. Environmental Protection Agency, Industrial Environmental Research Laboratory, Research Triangle Park (IERL/RTP), North Carolina. The advice and counsel of the EPA Project Officer, Mr. James D. Kilgroe, and other IERL/RTP staff members were very helpful in performance of this work.

INTRODUCTION

Battelle's Columbus Laboratories (BCL) is performing an environmental assessment of coal cleaning processes under Contract No. 68-02-2163 with the Industrial Environmental Research Laboratory at Research Triangle Park, North Carolina, (IERL/RTP) of the U.S. Environmental Protection Agency (EPA). The broad objective of Battelle's program with EPA is to perform a comprehensive assessment of the environmental pollution which results from transportation, storage, cleaning (physical and chemical), and refuse disposal of coal.

A strong base of engineering, ecological, pollution control, and cost data is being established which can be used in comparing coal cleaning processes from both an environmental and economic viewpoint. This information also can be used to identify needs for pollution control technology development.

The program is organized into three major tasks: (1) system studies, (2) data acquisition, and (3) general program support. This report covers the period from October 1, 1977, until research activities ceased on November 17, 1978. During that period significant advances were achieved in all three task categories. Since that time, all activities have been directed at the preparation of reports which are programmed to summarize logically the research results. Of necessity, in the preparation of the summarizing reports, deficiencies in the research results, when observed, are being corrected. Thus, even though formal research activities were completed on November 17, 1978, research progress still is being made through the focus being provided through report preparation.

Future research efforts on this continuing U.S. EPA technical area will be conducted by another contractor. Thus, except in generalities, no future directions for this research have been delineated.

SYSTEMS STUDIES

Systems studies have included: revision of the technology overview report[(1)*] drafted during the first program year; preparation of a summary of the pollution control technology effort[(P-9)**]; continuation of the development of environmental assessment criteria for pollutants associated with coal cleaning processes; and initiation of pollution control trade-off study planning.

Technology Overview

A technology overview report was prepared. This report summarizes the state of the art of physical coal cleaning with respect to cost, energy efficiency, applicability, extent of development, and commercialization prospects. In the report, the various current physical coal cleaning operations, such as coal pretreatment, coal separation, product conditioning, and auxiliary processes are described and combined into systems capable of minimum, intermediate, and maximum coal cleaning efficiencies. The physical and chemical properties of coal are discussed and the pertinent literature on washability of many U.S. coals is cited. Technological descriptions are presented for coal cleaning processes, e.g., size reduction, sizing, desliming screens, fine coal separation, jigs, dense-medium vessels, air tables, and wet concentrating tables. Potential pollutants evolved from these processes and their control are identified.

The revised draft report provides a background against which requirements for further developments of coal cleaning technology and control techniques for the associated pollutants can be established. It also provides information

---

* See pages 52-53.
** See page 51.

on costs of physical coal cleaning and comparative economics with respect to flue gas desulfurization. It is concluded that physical coal cleaning offers significant environmental and economic benefits, even when it must be combined with flue gas desulfurization to reach stringent emission limits. The economic benefits of coal cleaning more than offset its cost. Additional details of these reported results are provided later in this report.*

Detailed Process Descriptions

A preliminary report was prepared in June, 1977, to provide detailed descriptions of pollution control technology applicable to coal cleaning processes.[2]

Specifically, emissions of potential pollutants from coal preparation plants, storage, transportation and handling facilities, and solid waste disposal areas, based on data available in literature were characterized. Various control technologies for air pollution, water pollution, and solid waste were described and evaluated.

A technical paper[P-9] on pollution control technology for coal cleaning processes, presented at the 1978 EPA symposium on coal cleaning**, represents a concise summary of this work. Included are the types and quantities of pollutants resulting from coal cleaning processes and the types and costs of applicable pollution control technologies currently available.

Development of Environmental Assessment Criteria

The development of environmental assessment criteria for pollutants associated with coal cleaning processes is necessary prior to establishment of the relative importance which should be placed upon monitoring and controlling specific pollutants. Pollutants to all three media--air, water, and land--were considered. A draft preliminary report[3] on this subtask was submitted to EPA in April, 1977. Approaches and potential difficulties in (1) establishing a universe of pollutants of concern, (2) estimating enviornmental concentrations, (3) estimating permissible concentrations, (4) preliminary rating

* See pages 36-42.
** See pages 49-51 and Appendix A.

of pollutants, and (5) refining pollutant ratings were presented. A summary of pollution control regulations related to coal production, cleaning, and consumption was included.

During the current period, the principal emphasis of the research was on selection of methods for determining and evaluating estimated permissible concentrations (EPC's) of pollutants for man and biota. Research was also continued on selecting pollutants of most concern and selecting methods for estimating concentrations of pollutants after transport to the environment.

A draft special report[4] on this subtask was submitted to EPA in January, 1979. A total of 51 elements and 23 substances or groups of substances, listed in Table 1, are recommended in the report for investigation as Priority I pollutants related to coal cleaning processes.

TABLE 1. PROPOSED PRIORITY I POLLUTANTS FOR COAL CLEANING PROCESSES

Elements			Groupings	
Aluminum	Iodine	Strontium	Alkalinity	Hydrocarbons
Antimony	Iron	Sulfur	Ammonia	Photochemical Oxidants
Arsenic	Lanthanum	Tellurium	Cyanide	Oil and Grease
Barium	Lead	Thallium	Chlorides	Phenols
Beryllium	Lithium	Thorium	Nitrates	Organic Sulfur Compounds
Boron	Magnesium	Tin	Sulfides	
Bromine	Manganese	Titanium	Sulfates	
Cadmium	Mercury	Uranium	SO_x	Organic Nitrogen Compounds
Calcium	Molybdenum	Vanadium	NO_x	
Carbon	Nickel	Zinc	Total Suspended Solids	Polycyclic Organic Materials (POM's)
Cerium	Niobium	Zirconium		Carbon Chloroform Extract (CCE)
Cesium	Nitrogen			
Chlorine	Oxygen		Total Dissolved Solids (TDS)	
Chromium	Phosphorus			
Cobalt	Potassium		Chemical Oxygen Demand (COD)	
Copper	Rubidium		Total Suspended Particulates (TSP)	
Fluorine	Selenium			
Gallium	Silicon		Carbon Dioxide	
Germanium	Silver		Carbon Monoxide	
Indium	Sodium			

The fundamental criterion for ranking the importance of any pollutant is the relationship between its expected environmental concentration and the maximum concentration which presents no hazard to man or biota on a long-term basis. Environmental concentrations depend upon emission rates and the effects of physical transport and dispersion. Ultimately, these data will come from field measurements but in the interim must be estimated. Methodologies for these estimations were reviewed; the requisite methodology is well developed and little further development appears necessary.

Ecological transport and distribution is much less well developed, and the investigation revealed that there are large gaps in the data for many elements and many species. For purposes of investigating ecological transport and distribution, a compartmental model of a generic ecosystem was defined, as shown in Figure 1, with partitioning into functional compartments which represent the dominant sinks, biotic groups, and pathways of a typical ecosystem. Illustrative data on percentage uptake/retention (on a concentration basis) were presented for eight Priority I elements, i.e., arsenic, beryllium, cadmium, iron, lead, manganese, mercury, and selenium.

The basic form for the equation for calculating environmental goals, such as EPC's, may be simply stated as:

$$\text{EPC} = (\text{dose/response}) \times \text{adjustment factor(s)},$$

where dose/response is expressed as an oral LD_{50}, TLV (threshold limit value), lowest concentration, or some similar form relating the dose of a particular compound or substance to the response of a particular receptor population. A variety of factors is used to adjust the dose/response data to yield an EPC. Adjustment factors include exposure time, elimination rates, bioaccumulation, method of exposure, and safety factors. Adjustment factors can be used to correct deficiencies in the dose/response data or to compensate for circumstances peculiar to the unknown situation, such as accumulation of the chemical in tissues that jeopardizes the organism's health.

Twenty formulae for deriving EPC's were identified and considered in this study. No one formula was found to fulfill all needs; recommendations were developed for suggested improvements. A major difficulty in all formulae is the inability to utilize the variety of pertinent toxicological data available. Improved methods are badly needed for interconversion of toxicological data

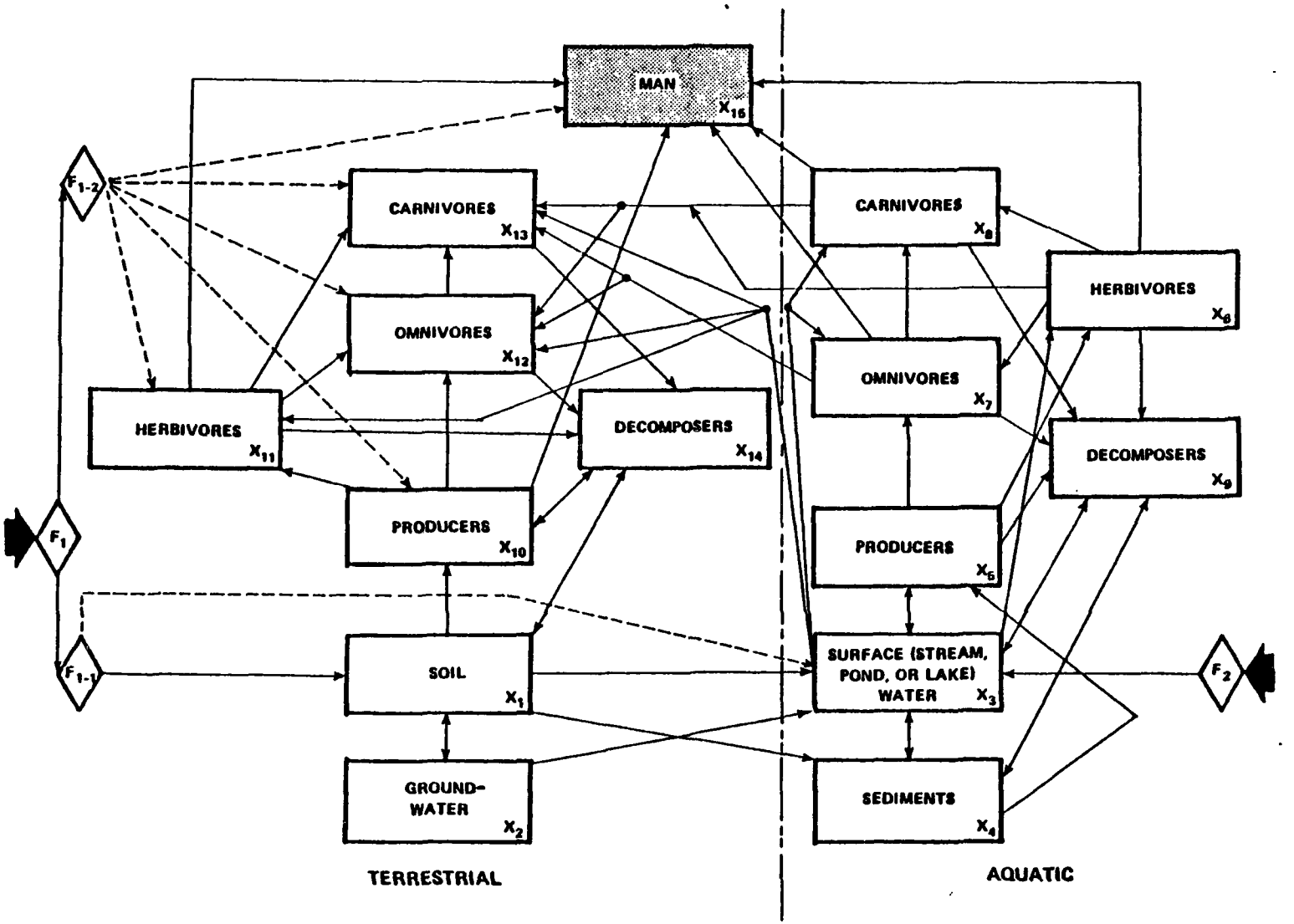

[F_1 (having components F_{1-1} and F_{1-2}) = airborne atmospheric forcing function, and F_2 = aquatic input forcing function.] Man is shown, but no data are reported.

FIGURE 1. COMPARTMENTAL MODEL OF GENERIC ECOSYSTEM AND DOMINANT PATHWAYS OF POLLUTANT TRANSPORT

to more useable forms. Equations for conversion of toxicological data for four non-oral routes of administration to an LD_{50} basis were reviewed.

It was concluded that preliminary, working pollutant priority lists can be derived by comparing the emission concentrations (uncontrolled and controlled) in each stream (air or water) with the concentrations established by air or water quality criteria or by regulation. These concentration levels may be health- or ecology-based, or both; or they may reflect available technology, e.g., "best available control technology" (BACT). Such lists will provide a working basis for prioritization of R&D efforts while the more precise and sophisticated environmental goals, such as multimedia environmental goals (MEG's) and minimum acute toxicity effluents (MATE's) are being developed and improved.

Major accomplishments of this subtask were (1) development of a sound understanding of the types and forms of environmental assessment criteria needed in support of the coal cleaning environmental assessment program, (2) development of conceptual approaches to estimation of environmental concentrations and development of environmental goals, (3) identification of data and methodological gaps, and (4) development of recommendations for further research needed to close these gaps.

It was shown that the problem of an adequate health and toxicological effects data base equals or exceeds the methodology problem. One of the most critical information needs to support the derivation of EPC's are dose/response data on the health and ecological effects of individual pollutants and their mixtures. Data are sparse on the pollutants of concern in coal cleaning.

Pollution Control Trade-Off Studies Planning

A work effort was initiated in December, 1977, to develop plans and make computer program modifications in preparation for pollution control trade-off studies. Two areas were defined as needing trade-off studies:

- Pollution control techniques for coal cleaning processes
- Systems for SO_2 emission control.

Five individual research components were undertaken as part of this subtask, each contributing methodologies needed to achieve objectives in the two trade-off studies areas. Not all objectives were reached because research efforts were ended on November 17, 1978.

Planning for Trade-Off Studies of Pollution Control Techniques for Coal Cleaning Plants

These planning and computer modeling activities were planned to provide a methodology for identifying combinations of pollution control equipment and techniques which would result in minimum environmental impact and/or pollution control costs for various types of coal cleaning plants. Extensions were planned for Coal Preparation Simulation Model Version 4 (CPSM4), as modified by Battelle, to permit simulation of pollution control techniques for air, water, and solid waste. In addition, the feasibility and practicality of various mathematical optimization techniques were investigated as a means of determining the combination of pollution control processes and the operating level of each process that would result in the minimum total annual cost of pollution control for coal cleaning plants in the course of their meeting emission standards.

To this end, preliminary algorithms were developed for use in simulation of control techniques for air pollution and solid waste. A review of the known literature and other data pertaining to the simulation of water pollution control indicated that sufficient data are available for development and testing of preliminary algorithms for water pollution control techniques. Site-specific data, at least in the area of solid waste control, ultimately will be necessary for proper application.

Also, extensions have been made to Battelle's modified version of Coal Preparation Simulation Model Version 4 (CPSM4), to incorporate algorithms for coal size degradation, dewatering devices, water flow streams, dryers, thickeners, and a cost component. The expanded computer model, including Battelle's modified version of CPSM4 is called Coal Cleaning Assessment Model (CCAM).

Cost relationships were developed from articles in the literature for equipment and techniques in the area of air and water pollution control and solid waste disposal. The cost relationships were to be factored into the computer model to permit costs of alternative pollution control techniques for coal cleaning plants to be compared. Cost functions were developed for neutralization, coarse refuse disposal, scrubbers, cyclones, filters, and screens.

Although significant progress was made in developing methods and computer programs for pollution control trade-off studies, substantial work remains to be accomplished. Investigation of mathematical optimization techniques is discussed in the next section.

Planning for Trade-Off Studies of Systems for SO_2 Emission Control

These planning and computer modeling activities were developed as a means for providing a methodology for comparing environmental factors and costs for alternative systems for SO_2 emission control in utilizing coal as an environmentally acceptable fuel. In addition, approaches for comparing systems with respect to energy consumption were to be defined. The methodology was intended to be applied to the following SO_2 emission control strategies:

(1) Physical coal cleaning (PCC)

(2) Flue gas desulfurization (FGD)

(3) Use of naturally occurring low sulfur coal

(4) Appropriate combinations of the above strategies.

Approaches for modeling chemical coal cleaning and chemically active fluidized bed combustion processes were sought. In addition, an investigation was planned for studying the feasibility and practicality of various mathematical optimization techniques, to be used as a means of determining the SO_2 emission control system that will result in the minimum total annual cost, or cost per 10^6 Btu (or kWh), for the coal utilization facility while meeting actual or projected emission standards.

The preliminary design and initial testing of the overall computer control system to support the subroutines for the system trade-off studies were completed. This overall computer program is called "Emission Control Assessment Model (ECAM)". The scopes of the three computer programs partially developed on this entire subtask are shown in Figure 2. ECAM represents a generalization of the techniques used in CPSM4 and CCAM. ECAM was to deal with the entire coal processing system including transportation, handling, storage, physical coal cleaning with control technology, and end-use facilities which may use flue gas desulfurization systems. Preliminary ECAM subroutines were written for transportation, handling, storage, and boiler operations. The storage

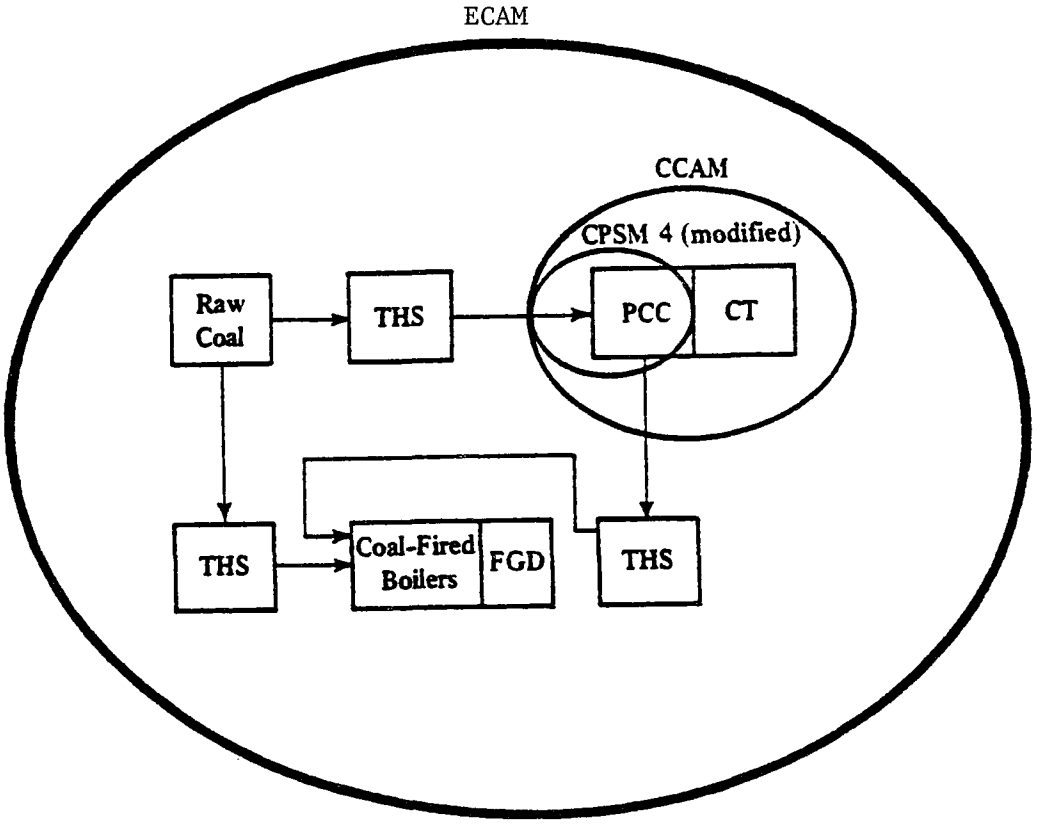

- ECAM, CCAM, and CPSM4 (modified) are process simulation models.

LEGEND

PCC: Physical Coal Cleaning
CT: Control Technology for Coal Cleaning Plant Pollutants
THS: Transportation, Handling, and Storage
ECAM: Emission Control Assessment Model
CCAM: Coal Cleaning Assessment Model
CPSM4: Coal Preparation Simulation Model-Version 4 as Modified

FIGURE 2. SCOPES OF COMPUTER PROGRAMS FOR TRADE-OFF STUDIES

subroutine included an algorithm for leachate from coal and refuse storage piles.

Study of mathematical optimization techniques for coal cleaning plant pollution control techniques and SO_2 emission control systems resulted in the selection of geometric programming for intensive investigation. Other techniques considered included sequences of linear programs and gradient methods. An example was developed to illustrate the application of geometric programming to the optimization of SO_2 emission control systems; but computer runs of the example are needed.

Analyzing Sulfur Variability Using Methods of Geostatistics

Sulfur variability in coal was analyzed using the methods of geostatistics. Thus, an exploratory application of geostatistics was made of data covering the entire year of 1970 for daily averages of lb $SO_2/10^6$ Btu for the Helen mine. This application was subject to several qualifications, including the assumption that successive mining days are equivalent to sampling at uniformly spaced locations along a straight line in a coal seam. The resulting empirical variogram was found to be well-fitted by the standard Matheron model. The variograms and a derived formula were then used to predict the reduction in the variance of averages based on n successive daily run-of-mine measurements. In contrast to the simple statistical relation for independent measurements, the variograms approach gave excellent predictions for the variability of averages based on different sample sizes. A paper on this research was presented at the coal cleaning symposium[P-1].

A number of investigations previously have attempted to sort out the complexities of the variability associated with coal measurements, and the results have been subject to much controversy. In this current work, methods of geostatistics were applied to the analysis of sulfur variability in coal, with good agreement, for the data examined, between observed and predicted variances as a function of sample size. These results suggest that the methods of geostatistics may have important applications to a wide variety of coal sampling problems.

Development and Validation of a Methodology for Representing Washability Data by Mathematical Techniques

An investigation was made of suitable mathematical techniques for interpolating and extrapolating limited experimental washability data. It was found that the weight fractions for washability data for Homer City coal (Feed No. 1) were well represented by Rosin-Rammler distributions. After the data were corrected for truncation, excellent fits were obtained for the distribution of weight according to size, for each of 12 specific gravity fractions. The characteristic size parameters and dispersion parameters of the Rosin-Rammler distribution show a discontinuity at a specific gravity of approximately 1.4. This behavior requires further study to determine how to obtain a well-behaved surface that can be used as a general basis for interpolating among limited washability data to obtain more detailed washability data. A paper on this research was presented at the coal cleaning symposium[P-5].

The initial results of the washability data study indicate that coarse washability data can be refined by mathematical interpolation techniques based on Rosin-Rammler distributions. The use of this technique has the potential of significantly reducing the cost of obtaining empirical washability data.

Conceptualization of a Model to Represent Effects of Clean Coal on Boiler Performance

A conceptual simulation model was desired to represent the relationships between boiler performance parameters and coal characteristics. In the effort to conceptualize the model to represent the effects of clean coal on boiler performance, it became useful to think in terms of three categories of data and/or information, as follows:

(1) Boiler (plant) performance parameters

(2) Potential problem elements in boiler operation (that affect performance)

(3) Properties of the coal feedstock.

The major boiler (plant) performance parameters were determined to be as follows:

- Boiler (plant) capacity
- Boiler (plant) availability
- Unit efficiency
- Operating costs (other than fuel)
- Maintenance costs
- Bottom-ash-hopper pluggage
- Convection pass fouling
- Convection pass corrosion
- Air preheater corrosion
- Others.

The potential problem elements that most relate to coal variables include:

- Coal handling system capacity
- Pulverizer capacity
- Pulverizer wear
- Coal feeder line wear
- Wall tube slagging
- Wall tube corrosion.

Coal properties of interest include:

- Ash content
- Sulfur content
- Ash analysis
- Grindability
- Moisture content
- Others.

If adequate data were available, it might be possible to relate coal properties directly to performance parameters. However, these data are not available, except for a few instances. Thus, it probably would be necessary to relate coal properties to potential problem elements in selected areas (e.g., fouling and slagging) and then to estimate relationships between potential problem elements and performance parameters. Efforts involved (1) establishing priorities of the relationships so that initial emphasis could be placed on the most important areas, and (2) assembling the data and body of knowledge necessary to understand and document the more important relationships. To the extent justified by available data, quantitative relationships were to be established. Where available data were inadequate to establish quantitative relationships, subjective estimates of quantitative relationships were to be made.

There are strong preliminary indications that the use of clean coal can have a major beneficial impact on boiler availablity, capacity, efficiency, and operating and maintenance costs. The greatest economic benefits of coal cleaning may be due to the effects of clean coal on boiler performance. The preliminary study in this area has resulted in definitions of the scope and relevant aspects of the problem and preliminary approaches for estimating relationships between potential problem elements and performance parameters.

DATA ACQUISITION

Data acquisition efforts included (1) selecting final preferred test sites and making arrangements for testing at five of the ten sites, (2) selecting and documenting the preferred procedures for sampling and analysis, (3) designing the overall source test program, and (4) preparing the specific test plan for Site Category 1. These activities were based generally on a previously developed plan.[5]

Selection of Test Sites

Coal cleaning facilities were selected for field testing and sampling programs which will be conducted in support of the overall program directed at making an environmental assessment of the pollution potential of various coal cleaning processes. Progress prior to October, 1977, involved the development of a selection scheme, which was obtained by applying a statistical rationale for sequential sampling. First, four carefully selected variables, considered to have the greatest influence on the kinds of pollution controls needed for coal cleaning operations, were defined. As shown in Table 2, these variables are: neutralization potential (N), pyritic sulfur (S), annual precipitation (R), and process technology (T). Based on the low (0) and high (1) potential pollution levels for each of these variables, 16 types of site categories, as shown in Table 3, can be defined. But six of these site categories are non-existent, e.g., the low rainfall condition in the western U.S. does not exist with high sulfur or acid conditions. Finally, a recommended sequential sampling design for the ten remaining coal cleaning plant categories was developed.

During the current year, an initial sorting of the more than 400 known coal cleaning plants was accomplished using information available in the literature. This sorting produced lists of facilities which corresponded to each of the ten site categories. For categories which included a large number of cleaning plants, three secondary constraints were imposed that narrowed the field.

The strategy used to select the best cleaning plants for sampling purposes is to (1) select plants cleaning coal from only one seam, (2) select plants with a production capacity above the mean for the category, and (3) select plants

TABLE 2. CLASSIFICATION VARIABLES AND ASSOCIATED LEVELS USED TO DEFINE SITE CATEGORIES

Variable	Low Level(0)	High Level (1)
N (Neutralization potential)	pH $\geq$ 7.5[a]	pH $\leq$ 6.0[a]
S (Pyritic sulfur)	$\leq$ 1.0%	$\geq$ 2.0%
R (Average annual rainfall)	$\leq$ 1[illegible] in/yr	$\geq$ 25 in/yr
T (Coal cleaning process technology)	Plant types A & B[b]	Plant Types F, G, H, & I[b]

(a) pH of soil in the receiving environment. As defined, low N actually refers to a low pollution potential or high soil alkalinity which is, in fact, a high ability to neutralize acid streams.
(b) Plant Types A and B are simple configurations. F, G, H, and I are the most complex types.

TABLE 3. FACTORIAL LISTING OF SITE CATEGORIES

(N,S,R,T)[a]	(N,S,R,T)
(1111)	(0111)
(1110)	(0110)
(1101)[b]	(0101)[b]
(1100)[b]	(0100)[b]
(1011)	(0011)
(1010)	(0010)
(1001)[b]	(0001)
(1000)[b]	(0000)

(a) See Table 2, above, for definitions of low (0) and high (1) levels of pollution potential as expressed by neutralization potential, N; pyritic sulfur, S; average annual rainfall, R; and coal cleaning process technology, T. The combination (1010), for example, denotes a site category with N and R at Level 1 and S and T at Level 0.
(b) These site categories are excluded from further consideration, since no cleaning plants exist with these combinations of variables.

not located near coal-fired power plants. However, lists from some plant categories were already extremely limited in number and the above constraints were not used to narrow the lists further.

These abbreviated lists include a total of 47 facilities, as shown in Table 4. Subsequent to the preparation of the abbreviated lists, definite agreement for cooperation in the sampling and analysis program was reached with two companies covering two site categories and preliminary, tentative agreement was reached with two other companies with regard to three additional site categories. Exploratory discussions were held with a fifth company covering a sixth site category, but no final resolution of the request for cooperation was obtained. Homer City was selected for Site Category 1 and a formal agreement with this management was negotiated.

A draft special report[6] covering these results has been prepared and is being reviewed by EPA/IERL prior to formal publication.

TABLE 4. SUMMARY OF POTENTIAL SAMPLING LOCATIONS BY SITE CATEGORY[a]

Sampling Option	Site Category	Site Characteristics (N,S,R,T)	Number of Potential Sites
C	1	(1111)	3
	2	(1110)	6
	3	(1011)	11
	4	(0111)	2
B	5	(1010)	3
	6	(0110)	4
	7	(0011)	8
	8	(0010)	4
A	9	(0001)	3
	10	(0000)	3
Total sites to be considered further			47

(a) See Tables 2 and 3 for details on site category and characteristics.

Sampling and Analytical Techniques

Applicable methods of sampling and analyses for the purpose of assessing the environmental effects of coal cleaning plants were developed. The steps taken to achieve this objective were the following:

- Selection of sampling methods which are appropriate to anticipated pollutants from the various media
- Recommendation of accepted or new methods of preservation, storage, transfer, and preparation of samples for analyses
- Identification of analytical methods which possess the desired detection and sensitivity limits for the expected pollutants at the required levels of characterization
- Evaluation of the assessment strategy of the phased versus the direct approach in regard to convenience, cost, and utility
- Documentation of the overall desired or recommended procedures of sampling and analysis.

In late 1977, the outline of sampling and analysis methods for assessing the environmental effects of coal cleaning plants was completed and approved internally. Then a manual, detailing the guidelines and instructions for sampling and analysis methods to be followed in this research program, was written. The strategy and methods presented are consistent with the phased approach developed by the U.S. EPA, IERL/RTP. Also, the phased approach described in this manual provides a cost-effective framework for sampling and analysis of potentially hazardous waste streams from an industrial facility, with the ultimate goal being the design of the equipment necessary to abate the pollutants of concern. The Level 1 or screening phase of the assessment strategy is handled in the greatest depth with both Levels 2 and 3 being dealt with in less detail.

This manual[7] contains seven major sections: Section 1 - Introduction; Section 2 - Assessment Strategy; Section 3 - Physical Coal Cleaning Processes and Related Operations; Section 4 - Level 1 Sampling Methodology; Section 5 - Level 1 Analytical Methodology; Section 6 - Sampling and Analysis Level 2; and Section 7 - Quality Assurance. Each of the sampling and analysis sections deals with the accepted or state-of-the-art techniques necessary to satisfy

that portion of the phased approach for each type of sample that is anticipated --solid, liquid, slurry, or gas.

This document currently contains sufficient detail for all of Level 1 and a major portion of Level 2 sampling and analyses methods to satisfy the program objectives. However, additional effort, on the part of the IERL/RTP working committees on the sampling and analysis method will be necessary in order to arrive at final procedures for Levels 2 and 3.

Source Test Program

The generalized source test program is designed to ensure that the planning and testing at specific test sites is performed consistently and effectively with regard to costs, schedules, and data requirements.

In progress prior to October, 1977, specialists in hydrology, structural geology, water chemistry, air pollution measurement and modeling, and biological toxicity identified, for their respective disciplines, those test elements which are considered site-independent.

During the current year, a draft report[8] was completed which presents the objective and general structure of a field testing program designed for an environmental assessment of coal cleaning processes. The report is intended for use in preparation of test plans for individual coal cleaning sites. The three-phases, source assessment approach developed by IERL/RTP has been utilized in the report. Thus, field testing for each of the ten site categories eventually will involve three distinct levels of sampling and analytical effort. These three levels are linked such that Level 1 identifies problem areas that are assessed by the more rigorous Level 2 tests. Level 3 involves long-term monitoring of "key" indicator parameters which have been identified in the environmentally hazardous streams tested by Level 2 techniques.

Since the environmental source assessments for each of the selected coal cleaning plants will be similar, the elements common to all or most of the test plans for these facilities are presented in this report to facilitate the planning and preparation of individual test plans for each plant (Figure 3). The elements discussed include potential sample locations, collection techniques, and analysis techniques.

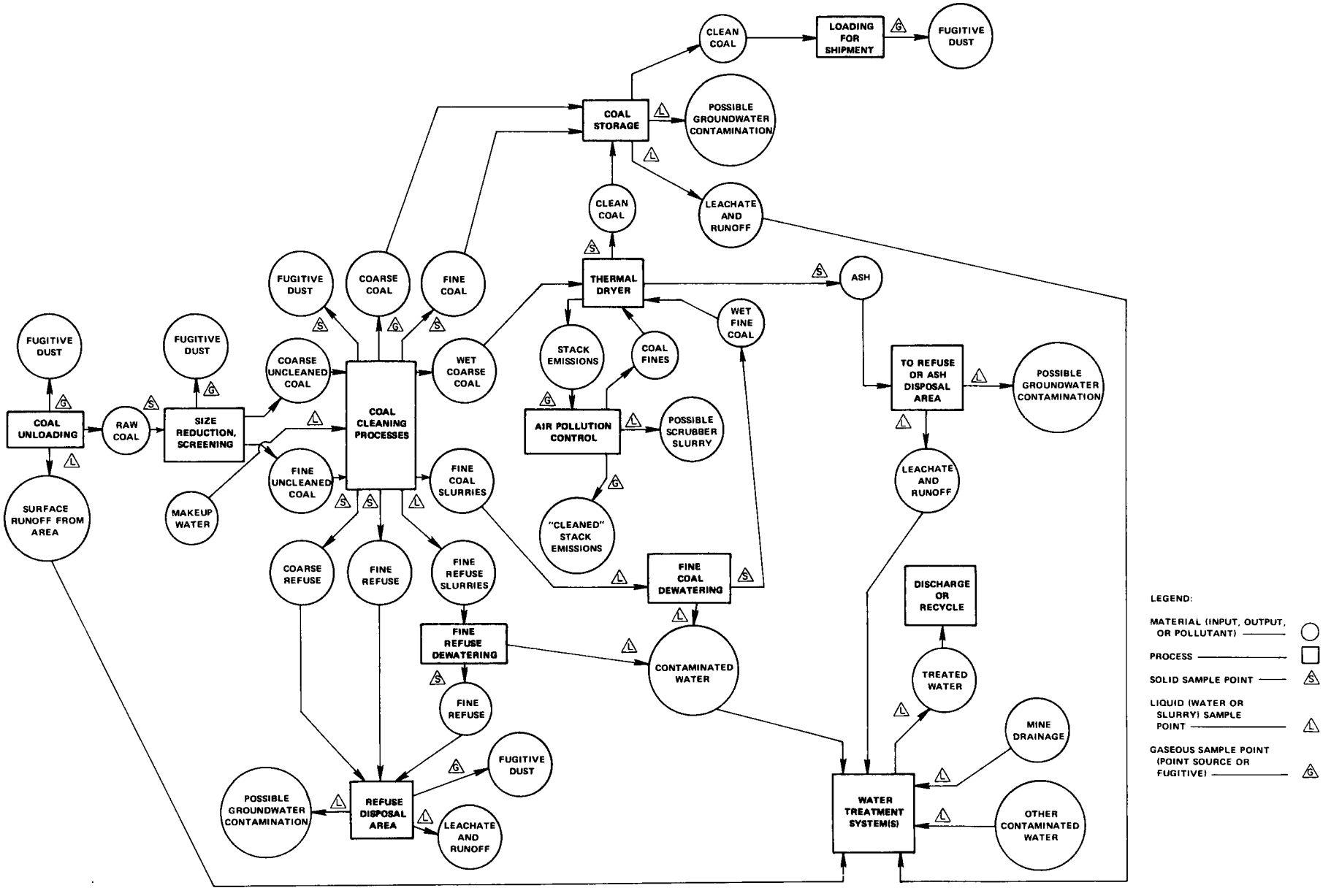

FIGURE 3. BLOCK FLOW DIAGRAM OF GENERALIZED COAL PREPARATION PLANT AND ASSOCIATED FACILITIES SHOWING POTENTIAL SAMPLING LOCATIONS

Results of the environmental source assessments will provide the following types of information: (1) a systematic evaluation of the physical, chemical, and biological characteristics of selected process streams and all effluent streams, (2) predictions of the potential effects of those streams on the environment, (3) ranking of the streams according to their relative biological toxicity, and (4) identification of pollution control technology which needs further research and development.

Site Category 1 Test Plan

One portion of Battelle's overall coal cleaning environmental assessment program includes field tests to be performed at selected coal cleaning facilities. This testing program will follow the phased approach for sampling and analysis and the generalized source test program, both previously described.

During the current year, two draft test plans were completed for the advanced Homer City coal cleaning facility, selected as the first of the ten field testing sites. The first plan was designed to apply to the interim configuration of the plant. Later, this plan was revised to include the sampling points in the final configuration of the plant as construction neared completion. The second or revised plan[9] is designed (1) to characterize grab samples from selected process and effluent streams, using semi-quantitative tests for selected physical, chemical, and biological effects parameters, (2) to make a crude evaluation of the effectiveness of pollution control equipment and techniques, and (3) to identify the problem waste streams where more rigorous sampling and analysis may be needed in the future.

In general, the testing will follow the Level 1 phase of a three-phased approach developed by the IERL/RTP of EPA. This Level 1 grab sampling and analysis is intended to show, within broad general limits, the presence or absence, the approximate concentrations and emission rates of most inorganic elements and certain anions, and classes of organic compounds. Particulate matter will be analyzed for size distribution and by microscopic examination. Biological effects testing emphasizes laboratory tests for human health effects and ecological toxicity screening. In addition, some Level 2 (more quantitative) analyses will be performed to determine more carefully the concentrations of some trace elements identified as having higher than expected concentrations

during previous testing in the vicinity of the Homer City power generating station.

Samples will be collected at a total of 48 different locations in and around the final configuration of the Homer City coal cleaning plant, cleaning plant refuse disposal area, coal storage pile and desilting ponds, emergency holding pond, leachate water treatment plant, and industrial waste treatment plant. Grab sampling locations outside the plant are shown in Figure 4. Types of samples to be collected include process water, wastewater, leachates, slurries, bottom sludges, fugitive dust, and stack samples from the thermal dryer. Stack samples will include both gases and particulates.

Types of analyses planned for Homer City samples vary depending on the sample type and location. In general, spark source mass spectrometry will be used on all samples for a broad analytical survey of inorganic elements.

Test plans similar to this one still need to be written for the other nine site categories. Once sampling and analysis has been completed at facilities representative of each of the ten site categories, generalization of test results should be possible.

GENERAL PROGRAM SUPPORT

Under the general program support task, a variety of research activities have included (1) activities related to the Homer City demonstration, i.e., interpreting the results of the grab-sampling campaigns in light of values for the EPA's multimedia environmental goals and continuing to modify the computer programs for simulating this and other facilities; (2) activities of the Coal Cleaning Information Center; (3) activities on the US/USSR technical exchange; (4) evaluation of coal cleaning as an SO_2 emission control strategy, including assessing the amounts of coal available to meet various SO_2 emission limits using the reserve processing assessment model; and (5) conduct of the coal cleaning symposium.

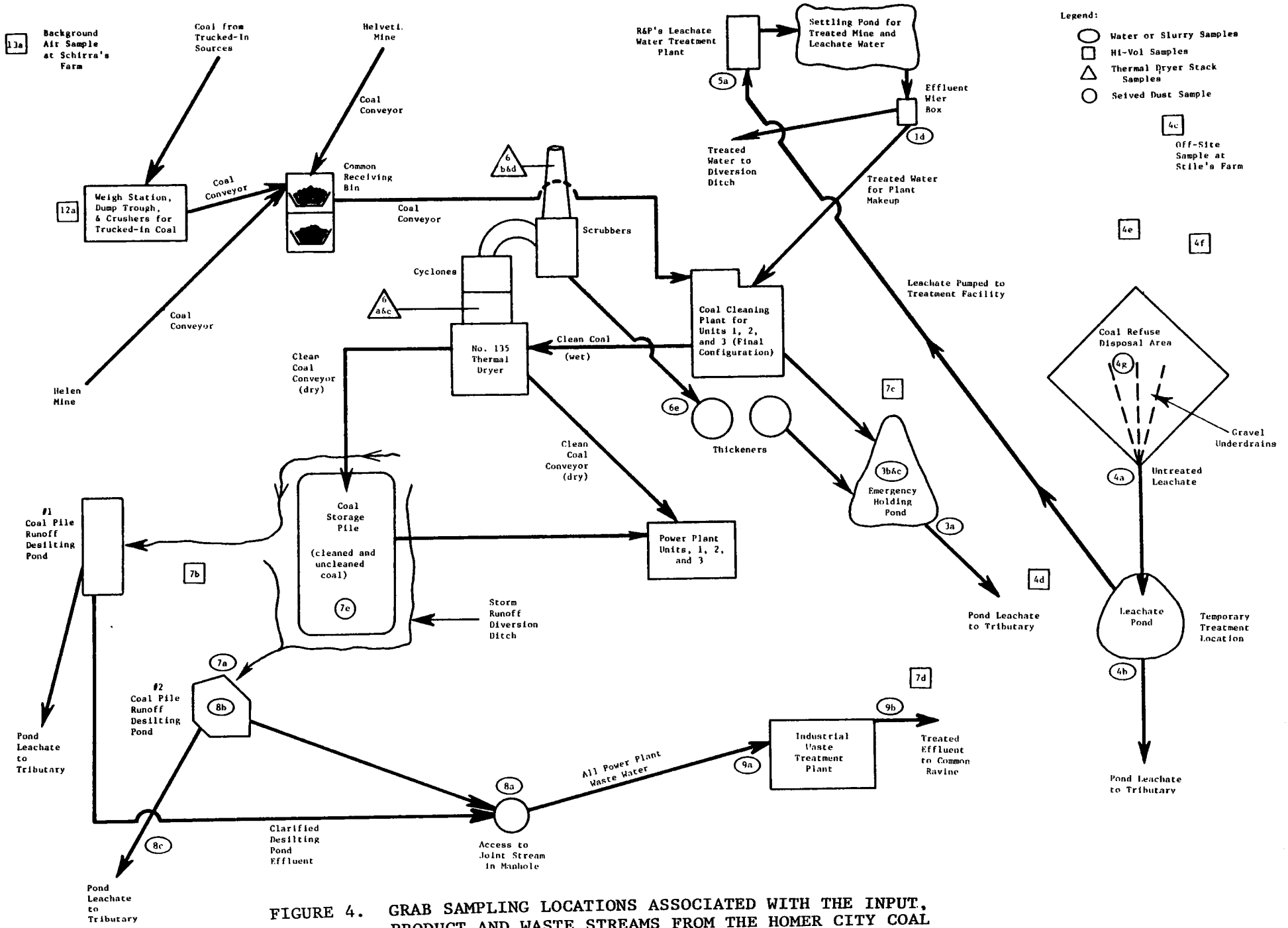

FIGURE 4. GRAB SAMPLING LOCATIONS ASSOCIATED WITH THE INPUT, PRODUCT, AND WASTE STREAMS FROM THE HOMER CITY COAL CLEANING PLANT IN ITS FINAL CONFIGURATION

Homer City Power Complex Testing

During the period from December, 1976 through April, 1977, a series of multimedia, grab-sampling campaigns were conducted by Battelle as a preliminary, pre-operational environmental survey of the Homer City Power Complex. Two coal mines, coal handling and storage facilities, gob piles, and three independent power generating units are located within the study area shown in Figure 5. Within the study area, as shown, is the site of an advanced physical coal cleaning facility, jointly owned by Pennsylvania Electric Company (Penelec), a subsidiary of General Public Utilities Corporation (GPU), and New York State Electric and Gas Corporation (NYSEG).

The purpose of this data gathering was to document the abundance or concentrations of selected key parameters. These collected data were used to evaluate the air, water, and biological quality of the study area both through interpretive techniques and by direct comparison with EPA Multimedia Environmental Goals values. These pre-operational environmental studies, while not sufficiently long-term to be a true baseline analysis, were conducted prior to operation of the cleaning plant as a reference point for future, more comprehensive, environmental testing which may be undertaken once the plant is in operation. Results and analysis of these data are presented in a report[10,11] and paper[P-8], both prepared during the current reporting period.

In summary, the ambient environment in the study area appears to be typical of many western Pennsylvania areas which include coal mining and handling operations. In many cases, stream water chemistry and biological quality were adversely affected by pollution sources outside of the study area, especially by acid mine drainage. Power complex operations had a negative impact on the chemical and biological quality of a few of the smaller tributaries. Concentration levels of particulates in the air were high in the vicinity of the coal storage pile, but decreased to levels characteristic of relatively good air quality at the boundaries of the power station property. Terrestrial vegetation is presently diverse in the study area. Some of the more sensitive plant species close to the coal pile, however, may begin to show signs of stress due to the accumulation of coal dust and other particulates. Estimated permissible concentration (EPC) values for several elements were found to be exceeded in either air or water media at the site of the coal cleaning facility, now under construction.

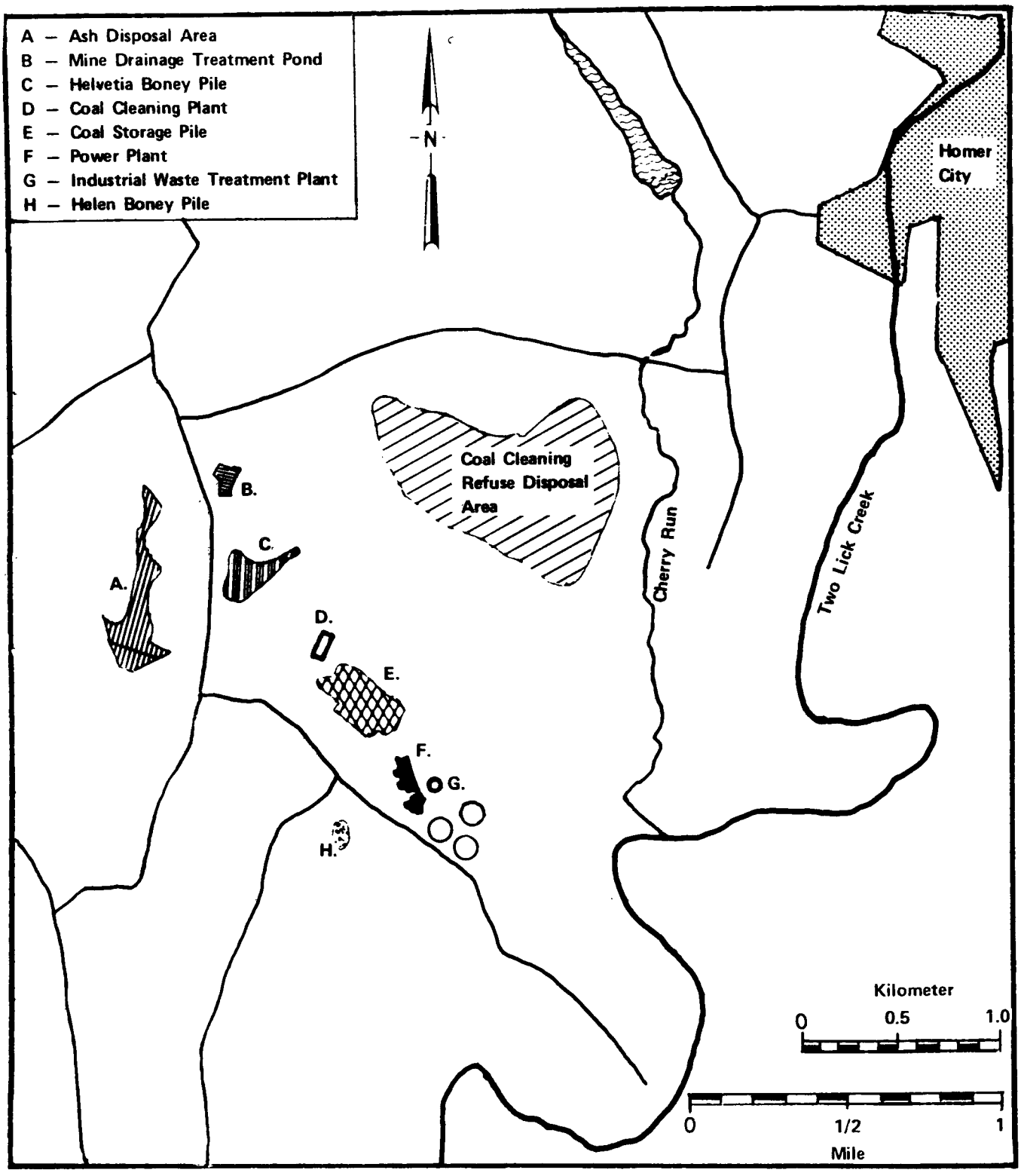

FIGURE 5. MAP OF THE HOMER CITY POWER COMPLEX

Modification of Computer Models for Evaluating Process Technology

The objective of this portion of the program was to modify existing computer programs for simulating coal preparation operations. The original computer program upon which this work was based with the U.S. Bureau of Mines coal preparation simulation model, version 4 (CPSM4). As of September 30, 1977, that program had been greatly improved in the following six aspects:

(1) The core requirements had been reduced and the modeling algorithms simplified and unified

(2) A notation for specifying coal cleaning configuration had been developed

(3) Conventions had been introduced to make possible the simulation of actual coal cleaning facilities, as opposed to generalized ones

(4) The maximum number of flows and units accepted by the program had been increased significantly

(5) The program had been written so that it could run on a variety of computers and had been implemented at numerous sites

(6) A draft user handbook and documentation had been prepared and distributed.

In addition to the above, the program had been used to model the Homer City coal cleaning plant and had reproduced fairly closely the design material balance for that plant.

All work done in this area, since the previous report took the form of additional modifications to program CPSM4 as modified. Where data were available, these additional modifications were tested against the Homer City plant configuration.

Generally, the modifications made to the program fall into five areas. These are discussed separately in the following. Each of these modifications were of course programmed in such a manner that the transportability of the program was fully maintained.

The first set of modifications allow the program to model the flow of water through the configuration as well as the flow of solids.

This capability allows the user to calculate the water balance for a configuration. This is a difficult calculation to perform by hand. Mathematically, this modification involved specifying equations for simulating various levels of moisture in the output flows of units and designing an iterative procedure for balancing the water flows into and out of a configuration.

The second set of modifications was made possible by the above. These modifications involve simulating the behavior of dewatering unit operations. These operations were completely ignored in the original version of the program since that version was unable to deal with water flows. The particular aspect of dewatering devices, other than their treatment of water flows, which made them difficult to model was the size degradation caused by them. Dewatering devices tend to cause changes in the size distribution of the solids passing through them. To deal with this resizing phenomenon, a prebreakage algorithm was added to the system. This algorithm uses the same basic functional form as was used already by the crusher and rotary breaker unit operations. This prebreakage algorithm is not only usable to simulate the size degradation behavior of dewatering devices, but also of other devices such as washers.

The third set of modification expanded the flow stream description so that the movement of any element, not just Btu's, sulfur, and ash, could be traced through the coal cleaning facility. This enhancement will greatly simplify the description of trace element movement through the configurations.

The fourth modification consisted of adding a data base capability to the program. Via this capability flow stream descriptions and configurations may be stored on and retrieved from direct access files. This capability greatly simplifies the use of the program, especially when many different feeds are being applied to a given configuration or vice-versa.

The final modification involved adding a cost component to the program. Using this component, the analyst can instruct the program to accumulate the individual capital and operating cost elements into a time series description of the required cash flows by type. Based on this cash flow description, the program then calculates the selling

price required for the output of the configuration in order to achieve a specified rate-of-return on investment. A detailed documentation of the model,[12] including these modifications, has been prepared.

The major limitation of the work done to date, and the major area where additional work is needed, has to do with the testing of the simulation results against actual coal cleaning configuration behavior. Although some work has been done in this area with the Homer City plant, as discussed below, more information is needed. The area which is weakest in this regard is the data for component costs. The program presently contains algorithms which should be able to accurately simulate coal cleaning configuration behavior; however, the coefficients for those algorithms are at this point very approximate. Additional cost and performance data are needed before this deficiency can be corrected.

Since September 30, 1977, when the program had been used to reproduce the material balance expected for the Homer City plant, three additional types of runs have been made and reviewed. The first involved adding the water flow to the program plant description. The results here agreed closely with those expected. The second involved testing the impact on the output flows from the plant assuming various mixes of Helen and Helvetia coals. The third tested the impacts of imperfect screening and of various different specific gravities of separation in the washing circuits. In all cases, the results of the computer simulation seemed to be reasonable. The significance of this work was that it clearly demonstrated that the computer simulation did seem to have the same sensitivities as would be expected in the real world.

The major limitation of the work to date is that no comparison has been made with actual Homer City plant performance. No usable data, either performance or cost, are yet available. As soon as such data become available, they should be compared to the program results.

Coal Cleaning Information Center

The Coal Cleaning Information Center (CCIC) was operated (1) to establish an information system which provides ready access to available and relevant data and references for this contract and for EPA and other contractors on its coal cleaning program and (2) to disseminate coal cleaning information in the

monthly Current Events Summary and the quarterly Coal Cleaning Environmental Review,[14] and (3) to provide a full reference service.

The CCIC consists of a hard-copy file of documents and a computerized data base containing citations of government and industry reports, reports prepared by contractors of EPA, DOE, and other government organizations, conference and symposia proceedings, journal articles, patents, books, and other reference documents. The information content pertains primarily to coal cleaning processes, related environmental and health effects, and applicable pollution control technology.

Storage, search and retrieval functions are facilitated by a computerized data base accessible by remote terminal. The CCIC is capable of providing information support and responses to technical information inquiries for a wide user audience.

A total of approximately 1,400 documents were indexed for input to the CCIC data base over the period of this contract. A user guide for CCIC,[13] submitted to EPA in October, 1978, was prepared as an instruction manual for researchers who are required to make on-line searches of the data base.

The CCIC data base provides a major and easily accessible information resource on coal cleaning technology and related environmental topics. Such an information resource is of substantial value in the support of ongoing coal cleaning research. It should be continued in operation to maintain its current relevance and to continue to provide a comprehensive information source to researchers in coal cleaning technology and related environmental topics.

Two thousand copies of each of the first three issues of the Coal Cleaning Environmental Review were published, and the majority of these copies were disseminated by EPA, during this report period. This publication provided descriptions of current research results and new developments related to coal cleaning processes, related environmental effects, applicable pollution control technology, and a current events summary. Through the Coal Cleaning Environmental Review, current information related to coal cleaning was widely disseminated to interested parties in government and industry, thus promoting increased knowledge about and acceptance of coal cleaning as a significant technology for SO_2 emission control.

US/USSR Technical Exchange Activity on the Environmental Consequences of Coal Utilization

Both the USA and the USSR are concerned with the environmental consequences of increased consumption of solid and liquid fossil fuels. This concern is extremely acute with respect to the enormous quantities of fuel consumed by very large electric generation stations. The rapid growth in the demand for electrical energy in both the Soviet Union and the United States has led to commensurate increases in the installed capacities of generating stations. The growth in the rate of electrical power generation and in the installed capacities of power generating stations during 1965 to 1975 and forecasts for 1980 are shown in Table 5.

Other available data show the sharp increase in the percentage of consumption of liquid fuels and natural gas during the period 1960 through 1975. During this period the absolute consumption of natural gas and liquid fuels in the Soviet Union increased more than tenfold, while coal consumption increased by a factor of only 1.7. A less pronounced but similar trend is noted for the United States where the consumption of liquid fuels and natural gas increased by a factor of about 1.5, while the increase in the consumption of coal was about the same, about 1.2.

In both nations this trend shifted in about 1975 to a growing use of coal and other solid fuels. This latter trend is expected to continue during the 1980's, with additional growth in generating capacity being thermal stations, in which solid fuels are used, and nuclear plants. In the USA, lack of public acceptance of sites selected for nuclear plants and recent changes in governmental policies have caused significant decreases in the growth rates projected for nuclear power stations. This, of course, has increased the projected growth rate for coal-burning facilities and the concomitant environmental problems associated with such facilities.

The exchange of information on the environmental consequences of coal utilization with the USSR began about four years ago, shortly after the signing of the environmental agreement. The information which has been exchanged has been in two general areas--coal preparation and the use of coal in complex advanced energy generation systems.

TABLE 5. PRODUCTION OF ELECTRIC POWER AND THE INSTALLED CAPACITY OF SOVIET AND U.S. GENERATING PLANTS

Type of Plant	Production								Generating Capacity							
	1965		1970		1975		1980		1965		1970		1975		1980	
	Bil. kWhr	%	Bil. kWhr	%	Bil. kWhr	%	Bil. kWhr	%	Mil. kWhr	%	Mil. kWhr	%	Mil. kWhr	%	Mil. kWhr	%
Thermal generating stations:																
Soviet	423.9	83.7	613.0	82.7	892.4	85.9	1103.9	80.0	80.8	70.3	121.3	73.0	162.5	74.7	203.2	71.5
U.S.	863.0	81.2	1241.0	80.5	1441.0	75.2	1947.0	74.4	188.0	79.0	260.0	76.2	360.0	70.5	426.0	66.6
Hydroelectric stations:																
Soviet	81.4	16.1	124.4	16.8	126.0	12.1	197.3	14.3	22.3	19.4	31.4	18.9	40.5	18.6	54.0	19.0
U.S.	200.0	18.8	257.0	16.7	301.0	15.7	285.0	10.9	44.0	18.5	55.0	16.1	64.0	12.5	78.0	12.2
Nuclear power plants:																
Soviet	1.4	0.3	3.5	0.5	20.2	1.9	78.8	5.7	0.4	0.3	0.9	0.5	4.7	2.2	18.4	6.5
U.S.	-	-	22.0	1.4	171.0	8.9	380.0	14.5	2.0	0.8	6.0	1.8	40.0	7.8	84.0	13.1
Other:																
U.S.	-	-	21.0	1.4	3.0	0.2	6.0	0.2	4.0	1.7	20.0	5.9	47.0	9.2	52.0	8.1
Total:																
Soviet	506.7	100.0	740.9	100.0	1038.6	100.0	1380.0	100.0	115.0	100.0	166.1	100.0	217.5	100.0	284.0	100.0
U.S.	1063.0	100.0	1541.0	100.0	1916.0	100.0	2618.0	100.0	238.0	100.0	341.0	100.0	511.0	100.0	640.0	100.0

Until recently, the coal preparation activities were concerned primarily with the use of flotation for the removal of pyritic sulfur. The transfer of that activity to the Energy Agreement led to a shift in emphasis on coal preparation at the July, 1977, meeting in Moscow. The activity since then has focused upon the environmental consequences of coal preparation. The initial exchange of information on this activity took place in September, 1978, when a Soviet delegation participated in the U.S. EPA Coal Cleaning Symposium which was held at Hollywood, Florida. During that symposium a paper was presented by the Soviet delegation. Plans have been made for a US delegation to visit the USSR in 1979 to continue the exchange of environmental information related to coal cleaning.

The major emphasis during the past year has been given to the use of coal in complex advanced energy generation systems. It is expected that the exchange of information in this area will be extremely useful in comparing the effectivness of various pollution control strategies with coal cleaning.

The USA and USSR delegations have met on three occasions since last year to pursue the exchange of information on the utilization of coal in complex advanced energy generation systems. The principal activity during these meetings was the exchange of technical material which will be used in a joint report which will be completed in 1979. The delegations met in November, 1977, and twice in 1978 to complete the joint report. The most recent meeting was held in the USA in October, 1978. At that meeting the Soviet Delegation consisted of representatives from the USSR Academy of Sciences, from the USSR Ministry of Energy and Electrification and from the USSR Ministry of Power Machinery Construction. The American Delegation included representatives from Battelle Columbus Laboratories and from United Technologies Research Center. The Soviet Delegation was headed by Mr. V. M. Maslennikov, Department Head, Institute of High Temperatures, USSR Academy of Sciences. The American Delegation was headed by Mr. G. R. Smithson, Jr., Manager of the Environmental Control Technology Program Office, Battelle's Columbus Laboratories.

During the October, 1978, meeting the final exchange of materials for the joint report took place. These delegations agreed that the materials for the joint report are prepared in their entirety.

In view of the large amount of material and the complexity of editing it, the following procedure was accepted for the preparation of the final joint report:

1. The Soviet side will compile the edited Russian version of the text in its entirety and will submit it to the American side.
2. The American side will translate the Russian text, will edit the English version of the text, and will submit a list of corrections to the Soviet side.
3. The report will be signed during a meeting of specialists in September, 1979, in Moscow.

Both sides believe that during the period of time before September, 1979, the research on the performance of combined cycle plants and methods for their control should be continued, and jointly authored papers prepared for publication in the USA and USSR.

Coal Cleaning As An SO_2 Emission Control Strategy and Barriers to Its Commercialization

An overall evaluation of the potential role for coal cleaning as a means of controlling SO_2 emissions has been conducted. The objectives were to examine the capabilities of coal cleaning in the light of various existing and proposed SO_2 emissions regulations, to determine the application in which the technology would be most useful, to identify the barriers which exist to prevent wider application of coal cleaning, and to describe actions which should be taken to overcome these barriers. Complete results of these evaluations are presented in two reports[15,16] and a paper[P-4].

A large amount of information about coal was compiled as resource data, including data on the coal reserve base, present and projected coal production, coal cleanability, current and projected coal use by utilities and industry, size and age distribution of coal-fired facilities, and the nature of coal contracts. The environmental impacts of coal cleaning were compared with other sulfur removal strategies such as FGD and the use of low-sulfur coal, and, similarly, cost comparisons were made among the various alternatives for SO_2 control. Comparisons were made also between

the quantities of coal which could be made available through the use of various coal cleaning processes to meet different emission standards and the quantities of coal currently required by utility and industrial facilities operating under each of the standards. Barriers to the implementation of coal cleaning were identified in each of several areas: technical, institutional, environmental, economic and social, legislative and regulatory, and transportation. Consideration of these barriers led to the formulation of actions needed to overcome the barriers.

Coal Availability

Existing facilities must meet SO_2 emission standards prescribed by the states in the State Implementation Plans (SIPs). The SIPs for SO_2 vary widely from state to state and often within a state. An evaluation of the usefulness of coal cleaning in providing compliance coal must consider not only the cleaning characteristics of coal produced in different regions but also the amounts of coal required by facilities under each of the various SIP regulations. A procedure was developed for carrying out such an evaluation. A computer file was developed to store data on existing utility and industrial energy demand in which each facility was classified by state, actual SIP requirement, capacity, and fuel. The location, capacity, and fuel data for utility boilers were obtained from EPA's Energy Data Systems (EDS) file, and the corresponding information for industrial facilities was obtained largely from the FEA survey of "Major Fuel Burning Installations" (MFBI). The assignment of the SIP regulation applicable to each facility was accomplished through a separately constructed matrix relating ZIP code and SIP regulations.

A "coal use" model was developed which relates the energy requirement taken from the facilities file to the quantities of raw coal in the reserve and of coal that could be made available by application of various coal cleaning processes to meet the prescribed SO_2 emission standards. The coal quantities were obtained from the RPAM model. The analysis was done by region, with facilities in a region using coal produced in the same region, and for the entire United States. The model produced, for each

SIP range, the ratio of the total amount of compliance coal in the reserve, either raw or cleaned by one of eight processes, to the current annual demand. This ratio is, in effect, the years of availability of compliance coal for each SIP.

As one example of the results obtained, four bar charts are shown in Figure 6 for facilities in the Northeastern U.S. using coal from the Northern Appalachian Region. In each chart the ratio of total coal to annual demand (or years of availability) is plotted against annual demand. The width of each bar represents the aggregate demand of all facilities in the region which operate under SIPs in the range shown at the top of the bar, while the height of the bar represents the number of years that compliance coal would be available if used at the current rates. The area of each bar represents the total quantity, in 10^{15} Btu, of coal in the reserves of the Northern Appalachian Region which can satisfy the SIPs in the indicated range. The horizontal dotted line shows the years of coal availability, at the current rates, if used without regard to sulfur content, and the area under the dotted line represents the total Btu's of coal in the Northern Appalachian reserve.

The four bar charts show the results for raw coal and for coal produced by three cleaning processes defined as follows:

(A) Physical coal cleaning using 1-1/2-inch mesh coal at 1.6 s.g.

(B) Physical coal cleaning using 3/8-inch mesh coal at 1.6 s.g. if this produced coal to meet the standard; otherwise, 1.3 s.g. was used. An operating penalty of 1 percent energy loss was assumed.

(C) Meyers process: for raw coal with greater than 0.2 percent pyritic sulfur, the level of pyritic sulfur is reduced to 0.2 percent. No sulfur reduction takes place if the raw coal pyritic sulfur level is less than 0.2 percent. A 5 percent energy loss was assumed plus an operating penalty of 2 percent energy loss and a weight loss of 10 percent.

The charts show clearly the usefulness of these coal cleaning processes in producing coal to satisfy SIPs. The chart for raw coal shows that no coal in the region could be burned in compliance with a SIP of 0.32 (New Jersey, industrial, metropolitan areas), and only limited quantities

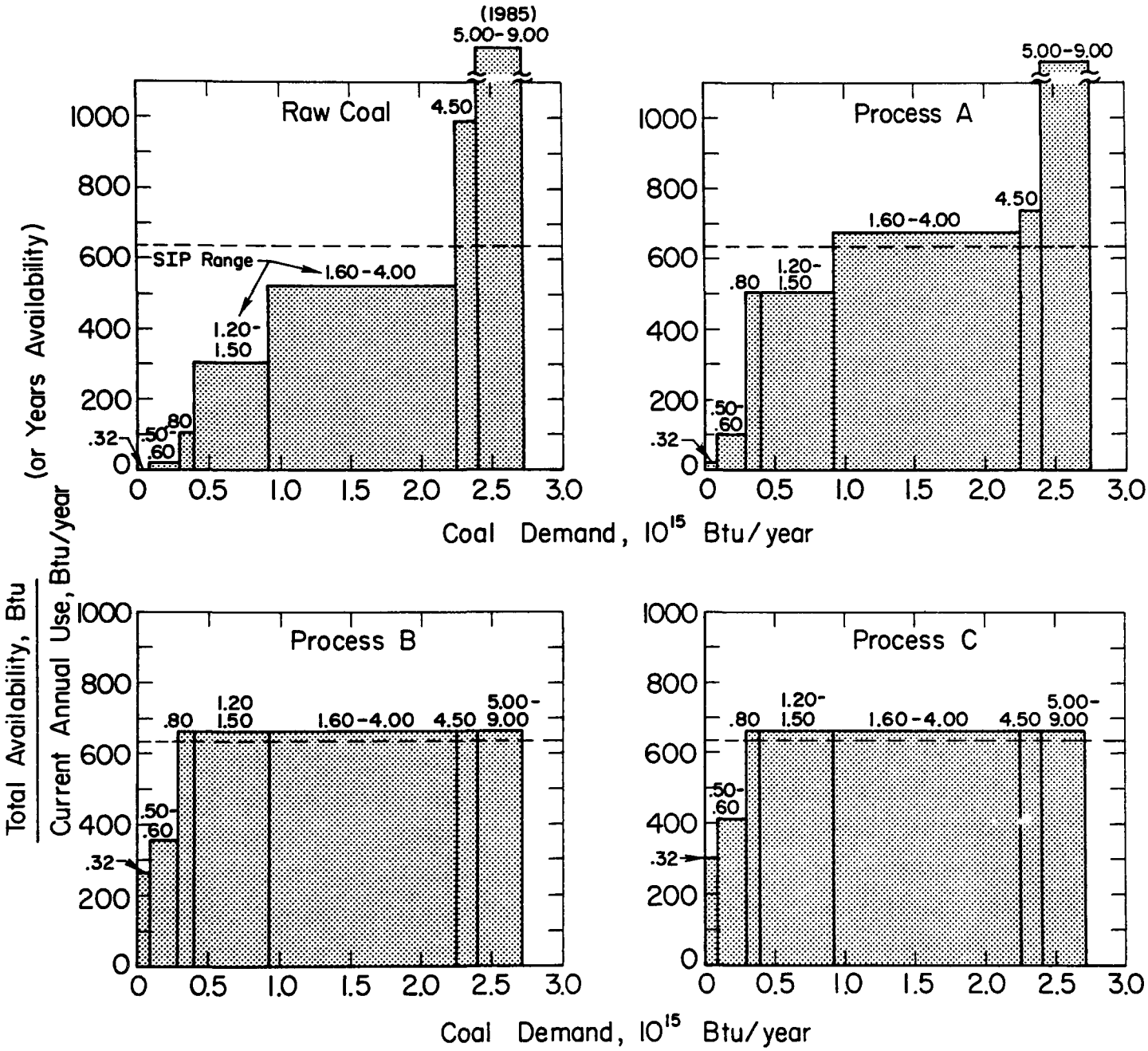

Northeast U.S. Utility and Industrial Coal Demand Met by Coal Produced in the Northern Appalachian Region

FIGURE 6. INCREASE IN THE QUANTITIES OF SIP-COMPLIANCE COAL ACHIEVABLE BY COAL CLEANING (See text for definition of processes.)

of raw coal are sufficiently low in sulfur content that SIPs of 0.5 to 0.8 could be met. On the other hand, the charts for coal cleaned by Processes A, B, and C show progressively increasing quantities (increases in the shaded areas) of coal in compliance with low SIPs which can be produced by these cleaning processes. Results of this type were produced for eight real or hypothetical coal cleaning processes, for six regions, and for the entire United States. The value of coal cleaning as a means of satisfying SIP regulations is clear from these results.

Cost Comparisons

An analysis was conducted[16] to compare the costs of the current technologically feasible SO_2 emission control methods: naturally-occurring low-sulfur coal, FGD, PCC, and the combined use of FGD and PCC. The procedure utilized has been (1) to compare and analyze the results of previous comparative studies; (2) to utilize these results and comparisons to develop further more accurate, reliable estimates of direct costs and benefits; and then (3) to go the final step of evaluating the influence of the performance of complete energy conversion systems on the cost and attractiveness of the competing control methods.

In addition to the costs associated with each technology which are traditionally included in a cost analysis, emphasis was placed in this work on identifying and quantifying the benefits of coal cleaning which in the past have been ignored in comparative cost analyses. The benefits attributed to burning clean coal are as follows: (1) transportation costs are reduced since less coal is shipped due to the increased heating value; (2) ash disposal costs for the utility are reduced; (3) coal pulverizing costs are reduced; (4) benefits paid to the mine operations Pension and Benefit Trust Fund are reduced since fewer tons of coal are shipped from the mine to equal the same heating value; (5) power plant maintenance costs are reduced by using coal with lower ash and sulfur content; and (6) for the situation where FGD and PCC are used in combination, there would be cost savings for the FGD system. Other indirect benefits to the power plant associated with burning clean coal result from increased plant efficiencies, longer plant life, and increased boiler availability.

Evaluation of the relative merits of the different approaches for SO_2 control requires that they be assessed from the standpoint of their impact on the cost of boiler output. The cost of power generation is determined by the capital charges, fuel cost, and O&M costs for the power plant. All three components are influenced in different ways by the method selected for sulfur oxide pollution control. Application of FGD increases both fixed charges and O&M costs but makes it possible to use readily available fuels. The use of PCC likewise increases both fixed and O&M costs for the total system but, when used in combination with FGD, reduces costs for the gas cleaning system. The benefits to the FGD system result from a reduced quantity of sulfur to be removed and flue gas to be treated. Consequently, units of smaller size and capacity may be used. Therefore, there will be reduced costs for energy, labor, chemicals, maintenance, supplies, overhead, working capital, sludge disposal, and land requirements for both the scrubber system and sludge disposal systems.

The use of low-sulfur western fuels has no impact as far as increased fixed costs are concerned. Its use in boilers designed for eastern bituminous coal is judged, because of lower heating value and other properties, to reduce boiler availability from 0.8 to 0.7 for purposes of the comparison made. Some increased boiler maintenance might also be anticipated, but none is assumed for purposes of this comparison.

Because costs for generation of electricity are greatly dependent upon the hours the plant is operated, any comparison of sulfur oxide control methods must consider their effect on plant availability. The differences in availability reflect differences in coal quality on boiler and scrubber operation and the effect of scrubber operability on system availability. The effect of scrubbers was estimated for different degrees of redundancy as far as spare scrubber modules were concerned. The availabilities estimated for the study performed are shown in Table 6.

Assumptions made for cost factors for the system configurations shown in Table 6 are shown in Table 7. The costs and benefits for PCC are generally consistent with data presented earlier. The relationship for incremental maintenance and mineral content is based on recent work reported

TABLE 6. POSTULATED CONDITIONS OF AVAILABILITY[16]

Case No.	Case Description*	System Availability
1	Raw high-sulfur eastern coal, no FGD (baseline)	0.8
2	Raw low-sulfur western coal, no FGD	0.7
3	Cleaned high-sulfur eastern coal, no FGD	0.9
4	Raw high-sulfur eastern coal, with FGD (4 modules + 1 spare)(Boiler = 0.8, FGD = 0.65/module)	0.627
5	Cleaned high-sulfur eastern coal, with FGD (3 modules + 1 spare)(Boiler = 0.9, FGD = 0.75/module)	0.806
6	Cleaned high-sulfur eastern coal, with FGD (3 modules + 2 spares)(Boiler = 0.9, FGD = 0.75/module)	0.864

* Individual availabilities for boilers and FGD modules are given in parentheses where applicable.

for TVA boilers*. Other costs are considered reasonable in light of the latest estimates. The direct benefits shown for PCC include those discussed earlier such as reduced transportation costs, etc. The indirect benefits are associated with FGD, e.g., reduced energy requirements for reheat of stack gases.

According to the TVA study*, power plants can experience incremental costs from poor coal quality starting at about $1.00 per ton for coal containing 13 percent minerals (ash + sulfur) and ranging to about $8.00/ton for coal containing 25 percent minerals. These costs, which could be minimized by reducing the mineral content of the coal, are approximately in the range of costs for PCC as determined in this current program. Based upon the TVA study of cost penalties for poor quality coal, power plants using

* Phillips, P. J., and Cole, R. M., "Economic Penalties Attributable to Ash Content of Steam Coals", Coal Utilization Symposium, AIME Annual Meeting, New Orleans, Louisiana (February, 1979).

TABLE 7. SUMMARY OF COSTS FOR A 500-MW COAL-BURNING POWER PLANT[16]

Power Plant

Annual Fixed Charges - (0.235)($215,375,000) = $50,663,000

Fuel

Eastern high-sulfur coal - $0.84/$10^6$ Btu
Western low-sulfur coal - $1.41/$10^6$ Btu

Production - (0.176)(Fuel Costs)/10^6 Btu

Incremental Maintenance - $0.15 (% ash + % sulfur - 12.5)/ton of coal

Flue Gas Desulfurization System

Annual Fixed Charges

Five modules - (0.235)($45,435,000) = $10,688,000
Four modules - (0.235)($40,485,000) = $9,523,000

Operating and Maintenance - $0.23/$10^6$ Btu

Physical Coal Cleaning

Capital Cost - $15,870 per ton/hr

Annual Fixed Charges - (0.235)($6,852,500) = $1,612,000

Operating and Maintenance - $0.089/$10^6$ Btu

Direct Benefits - $0.041/$10^6$ Btu

Indirect Benefits (when used with FGD) - $0.031/$10^6$ Btu

clean coal produced by the PCC plants studied in this program could expect to realize substantial cost reductions because of the amounts of ash and sulfur removed from the raw coal. However, accurate estimates of these cost reductions cannot be made because of insufficient data. Some but not all of the six benefits listed above were considered in the TVA study, the most notable exception being savings in cost for control of sulfur oxide emissions.

For this analysis a single-unit power plant, having a nominal capacity of 500 MW was selected. For each alternative SO_2 control method, the system performance, availability, and costs were evaluated. The overall comparison for the six system configurations is shown in Table 8. The results show that, when all costs and benefits to utilities of using physical coal cleaning are properly evaluated, a definite economic superiority for physical coal cleaning exists, even if supplemental application of another method, FGD, must be used to achieve full compliance with applicable NSPS or state implementation plans (SIP) emission limits.

Inspection of the total cost column of Table 8 reveals some interesting specific points. First of all, the systems including coal cleaning provide the least cost methods of producing electricity. Comparison of the two systems not providing sufficient control to meet existing New Source Performance Standards (NSPS), Cases 1 and 3, shows that physical coal cleaning of the fuel provides for an overall lower cost of generation, about 2.4¢/kWh versus about 2.5¢/kWh, than does the use of raw coal. This is despite the cleaning costs and the loss of some Btu's, because of the greater, more efficient utilization of the generation facility and a consequent lower fixed charge per kWh generated.

Second, for the systems which achieve full compliance with NSPS, the two cases which incorporate physical coal cleaning with FGD are by far more economical, about 3.0¢/kWh for both Cases 5 and 6, than the about 3.5¢/kWh for Case 4 for FGD alone. These results are confirmed by a paper* discussing a partially completed study being conducted by Bechtel National, Inc., for the Electric Power Research Institute. The paper concludes that "from the results obtained so far, it is judged that the cost of coal cleaning can be offset by savings in transportation costs, power plant capital costs, and operating and maintenance costs."

Finally, the example shown for the use of low-sulfur western coal (Case 2) indicates no cost benefit in comparison with any other case except Case 4, the one for FGD not in combination with physical coal cleaning. The cost here is about 3.3¢/kWh for Case 2 versus about 3.5¢/kWh for Case 4.

---

* Buder, M. K., Clifford, K. L., Huettenhain, H., and McGowin, C. R., "The Effects of Coal Cleaning on Power Generation Economics", paper presented at the American Power Conference, Chicago, Illinois (April 23-25, 1979).

TABLE 8. SUMMARY OF COSTS FOR POWER GENERATION USING VARIOUS CONTROL MODES[16]

Number	Case Description	Operating Hours per Year[b]	Power Plant Costs, ¢/kWh				FGD Costs, ¢/kWh		Coal Cleaning Costs, ¢/kWh		Coal Cleaning Savings, ¢/kWh		Total Costs, ¢/kWh
			Fixed	Fuel[c]	Production	Incremental Maintenance	Fixed	O&M	Fixed	O&M	PCC	PCC/FGD	
1[a]	Raw high-sulfur eastern coal, no FGD (baseline)	7008	1.446	0.840	0.148	0.093	--	--	--	--	--	--	2.527
2	Raw low-sulfur western coal, no FGD	6132	1.652	1.410	0.248	--	--	--	--	--	--	--	3.310
3[a]	Cleaned high-sulfur eastern coal, no FGD	7884	1.285	0.898	0.158	0.015	--	--	0.041	0.089	-0.041	--	2.445
4	Raw high-sulfur eastern coal, with FGD (4 modules + 1 spare) (Boiler = 0.8, FGD = 0.65/ module)	5493	1.845	0.840	0.148	0.093	0.389	0.230	--	--	--	--	3.545
5	Cleaned high-sulfur eastern coal, with FGD (3 modules + 1 spare)(Boiler = 0.9, FGD = 0.75/module)	7061	1.435	0.898	0.158	0.015	0.270	0.230	0.046	0.089	-0.041	-0.031	3.069
6	Cleaned high-sulfur eastern coal, with FGD (3 modules + 2 spares)(Boiler = 0.9, FGD = 0.75/module)	7569	1.339	0.898	0.158	0.015	0.282	0.230	0.043	0.089	-0.041	-0.031	2.982

(a) Not in compliance with NSPS promulgated December 23, 1971 (36FR24876).
(b) Based on postulated availabilities.
(c) Including transportation.

This result tends to confirm the conclusion made by some utilities that the use of low-sulfur western coal to achieve compliance with NSPS would be less costly than the use of FGD.

In the development of those cost comparisons, a number of simplifying assumptions were made which require that any conclusions reached be substantially qualified. First of all, the analysis applies only to utility boilers which are required to meet the former NSPS of 1.2 lb $SO_2/10^6$ Btu or SIP regulations in this same range. Additional analysis will be needed to determine definitely that similar conclusions will apply to operation of commercial/industrial boilers and those utility boilers which will be subject to the recent NSSPS (June 11, 1979).

Also, at least two areas of uncertainty are evident in the estimates of costs and benefits. First, the savings estimated for reduced boiler O&M costs (and associated increases in boiler availability) assume that these costs are a function of only the amount of ash and sulfur present in the coal. They are not based on results of operation with run-of-mine coal versus cleaned coal from the same source. Second, the estimates for the fixed, operating and maintenance cost for the FGD systems were based on average conditions and not related specifically to flue gas volumes to be treated, amount of sulfur oxide to be removed, etc. In any future analyses, a more rigorous approach based on recent work by Kilgroe* would be possible.

It does not appear, however, that the elimination of uncertainties would substantially change the results. And the cost advantage for PCC indicated in Table 8 represents a potential annual savings of $9 million to $21 million for a 500 MW plant. The magnitude of national savings which appear to be possible is such that activity to promote the use of PCC would be in the national interest.

Barriers to Expanded Coal Cleaning

A number of factors which might inhibit expansion of the use of coal cleaning were examined. The common theme encountered is that of uncertainty.

---

* Kilgroe, J. D., "Combined Coal Cleaning and FGD", unpublished manuscript, U.S. Environmental Protection Agency, Industrial Environmental Research Laboratory, Research Triangle Park, North Carolina (1979).

Investments in coal cleaning facilities may be deferred because of uncertainty regarding technical details, emission limits or other environmental regulations, or the ultimate profitability of the investment. The general types of barriers and a brief listing of examples of each will serve to summarize this work.

(a) Technical

- Lack of data relating washability results with commercial plant performance.
- Need for improved quality control techniques.
- Need for better techniques for separation of fine-sized pyrite.
- Need for more extensive data on benefits accruing to a boiler burning cleaned coal.

(b) Environmental

- Solid waste disposal requires control of leaching, fugitive dust emissions, and fires.
- Trace elements are concentrated in the refuse, a benefit with respect to the clean coal product, but require careful waste disposal.
- Land-use options in the immediate area of the cleaning plant are restricted.

(c) Transportation

- Increased coal use will place stress on the transportation system.
- Coal cleaning would help in mitigating the problem because of the higher Btu content per unit weight of cleaned coal.
- However, accelerated use of coal cleaning could add to the problem in certain areas in which cleanable coals predominate. For example, traffic from the Appalachian region to the middle Atlantic states would be expected to increase disproportionally as coal cleaning expands.

(d) Institutional

- PCC benefits may not be fully appreciated by potential investors.
- Commercial practicality of coal cleaning as a sulfur removal strategy may not be viewed as adequately demonstrated.
- Uncertainty regarding the Public Utility Commission's attitude regarding fuel cost pass-through if a utility were to invest in coal cleaning facilities.

(e) Economic and Social

- Coal cleaning does not now qualify for tax purposes as a pollution control investment.
- To increase production of indigenous high-sulfur coals, SIPs may be made less stringent, thus reducing the opportunities for coal cleaning.
- Capital may be difficult to raise because of the lack of information on commercial coal cleaning operations.

(f) Regulatory and Legislative

- Uncertainty regarding enforcement of SIPs, averaging periods, and variances.
- Uncertainty surrounding the permanence of any SO_2 emission standard.
- Uncertainty regarding air and water pollution standards for coal cleaning plants.
- Uncertainty over legislative incentives for the industrial use of coal.

Needed Actions to Promote Coal Cleaning

The major conclusion from this work is that coal cleaning is an attractive method of SO_2 emission control, yet it is neither widely accepted nor used as such. In order to overcome the existing barriers to expanded use of coal cleaning, the Federal government could adopt one of the following approaches.

(1) Establish policies to insure that PCC is competitive in the marketplace.

(2) Or, as an alternative, establish a policy to require that all coal be cleaned physically before it is burned.

Nine technical research and development programs are recommended as necessary under either policy.

Specific initiatives designed to implement the policy to assure competitiveness of coal cleaning could include the following:

(1) The removal of the uncertainties regarding both SO_2 emission regulations and environmental regulations pertaining to coal cleaning plants.

(2) The establishment of loan guarantees which can be used under Section 102 of the Energy Policy and Conservation Act (EPCA) for centralized coal cleaning facilities to be used for processing the output of many small coal producers.

(3) The appropriation of funds to construct coal cleaning plants, after which the operation of these plants could be turned over to industry on a pay-back-as-run basis.

(4) The establishment of legislative provisions for a lower income tax rate or for direct subsidies based on the percent of sulfur removed prior to the sale of the coal.

(5) A reversal of the Internal Revenue Service position which does not allow coal cleaning plants to qualify as pollution control investments for tax purposes.

(6) A change in ICC regulations allowing rail shipment of cleaned coals at unit train rates.

(7) The creation of a public information program to educate utilities and potential industrial users about the benefits of burning cleaned coal.

The policy to require that all coal be cleaned has merit on these general grounds:

- Coal cleaning is the least-cost method for achieving moderate, but significant, reductions in sulfur emissions from existing coal-fired boilers.

- Cleaned coal could be used immediately in existing facilities. There are essentially no "retrofit" problems. Thus, reduced SO_2 emissions can be achieved as soon as cleaned coal becomes available. In contrast, the New Source Performance Standards will not materially affect total SO_2 emissions until a significant fraction of existing boilers are retired and replaced.
- State-of-the-art coal cleaning methods could reduce uncontrolled emissions of SO_2 from coal-burning facilities by an estimated 32 percent if all coal were cleaned physically. Even greater reductions would be accomplished if advanced processes capable of removing organic sulfur are developed.
- Scrubbers, operating at 85 percent sulfur-removal efficiency, would have to be installed on 38 percent of the entire coal-burning capacity to achieve an equivalent reduction in SO_2 emissions.
- The use of cleaned coal is expected to extend boiler life, improve efficiency, and increase the capacity factor, all significant conservation benefits.

Congressional action would be necessary to mandate nationwide coal cleaning. The technology-related research and development recommended must be completed so that the mandated technology is fully available and demonstrated. Finally, measures designed to assure that capital is available for construction of coal cleaning plants will be required. These could include loan guarantees, accelerated depreciation schedules, product price supports, or other measures.

Reserve Processing Assessment Model

In the work described in the preceding section, the analysis of coal availability included only two levels of physical coal cleaning. As there are many different combinations of coal cleaning operations which might be employed, it was apparent that an improved method for assessing the cleanability of the nation's coal reserves by various processes was needed. To accomplish this, a computer model was developed which combines three sets of coal data and allows a variety of analyses to be performed on the resultant data base. The

model, described and discussed in a report[16] and paper[P-3], is called the Reserve Processing Assessment Model (RPAM).

The data base is composed of an overlay of the reserve base of U.S. coal, washability data for coal from sample mines, and approximately 50,000 detailed sample coal analyses. All these sets of data were obtained from the U.S. Bureau of Mines in the form of computer tapes. The resulting overlay contains 36,000 coal resource records which have the following information for each:

- Region, state, county, and bed
- Weight in tons of both strip and underground coal
- Mean percent by weight of ash, organic sulfur, and pyritic sulfur
- Mean heat content expressed in Btu/lb
- The float-sink distribution of the coal characteristics.

From this consolidated data base the effect of a coal cleaning process on the reserve resources can be calculated. The coal cleaning process specified can be physical, chemical, real, or hypothetical.

Programs were written to perform various analyses on the combined data base. A few of these analyses are described briefly as examples.

(1) Four physical and four chemical coal cleaning processes were defined. The percentage of the coal reserve base that could be made available to meet various fixed SO_2 emission limits by means of each of the processes was calculated for each of six geographic regions. The calculations were performed first with the effect of the variability in the sulfur content ignored, and then for two different emissions-averaging periods and for two different sizes of coal-fired facilities to reflect the effects of sulfur variability. The results were produced in tabular and in graphical form. The results can be used to compare the effectiveness of the several processes when applied to the coals of different regions. Further, the results show the impact on coal availability of various fixed-limit SO_2 emission standards and of various averaging periods for emissions.

(2) The ability of the same eight coal cleaning processes to produce coal to meet standards which require removal of a stated percentage of the sulfur in the raw coal was calculated by region and for various emission-averaging periods to reflect sulfur variability.

(3) Similar calculations were performed for the combined technologies of coal cleaning prior to combustion and flue gas desulfurization (FGD). For the four physical cleaning processes, the fraction of the reserve, by region, available to meet sulfur removal standards of 90 percent, 85 percent, and 75 percent was calculated as a function of the FGD removal efficiency. The results show, for example, that 25 percent of the coal in the Northern Appalachian Region, a simple cleaning process consisting of crushing to 1.5 inch top size and separation at 1.6 specific gravity would allow the FGD system to operate at only 75 percent removal efficiency and still meet an 85 percent removal standard. Such a reduction in the requirements placed on the FGD system in actual practice may make the difference between meeting or violating such a standard.

(4) The combined data base was used to estimate the SO_2 reduction which would be achieved if all of the coal produced annually were cleaned before combustion. The cleaning process assumed was 3/8-inch top size separated at 1.3 specific gravity followed by separation of the refuse at 1.6 specific gravity and combination of the 2 float fractions. The calculations were done on a state-by-state basis. The results show that a 32.4 percent reduction in national SO_2 emission could be achieved, at Btu loss in cleaning of only 3.04 percent, if all coal were cleaned by the assumed process.

The RPAM model is a powerful tool for evaluating the effectiveness of various coal cleaning processes, and for assessing the impact of various emission limits and averaging times on the quantities of coal which can be made available by cleaning or by combinations of cleaning and by FGD. The ability to do various analyses on a regional or state level adds to the usefulness of RPAM.

Work on this model should be continued to update the combined data base as new washability data and coal analyses are generated, and as modifications to the coal reserve base are made. Continued updating of the model would assure its availability for analyses in support of policy or R and D decisions.

A Major National Symposium on Coal Cleaning

A major participatory review of current coal cleaning programs was a useful result of the Symposium on Coal Cleaning to Achieve Energy and Environmental Goals. Approximately 225 participants, including engineers, environmental scientists, geologists, and managers from the coal industry, R&D organizations, coal users, planning agencies, and government attended the conference held in Hollywood, Florida, on September 11-15, 1978.

The Symposium provided a major forum for technical interchange among engineers and scientists concerned with the development and use of coal cleaning technology. The 5-day conference included five major sessions at which papers* were given on coal characteristics, coal cleaning overview, physical coal cleaning technology, environmental assessment and pollution control technology, and chemical coal cleaning.

Frank T. Princiotta, Director of the Energy Processes Division, Office of Energy, Minerals, and Industry, U.S. EPA, addressed the first symposium luncheon on the "Impacts of the 1977 Clean Air Act Amendment". The audience showed particular interest in his review of the status and substance of the draft New Source Performance Standards, which were published that week.

The symposium banquet was highlighted by the presentation, "Tomorrow's Energy Supplies", by Richard J. Anderson, Consultant to Battelle Memorial Institute, and a brief address by Gennadiy G. Voznyuk, Chief of Nature

---

* The papers prepared and presented by Battelle authors are listed on page 51. The final program is reproduced in Appendix A.

Protection Directorate, U.S.S.R. Ministry of Coal Industry. The Soviet representatives to the conference were honored and seated at the head table at the banquet. They included Viktor Kochetov, General Director, Donetskugleobogashcheniye, U.S.S.R. Ministry of Coal Industry; Ivan Nekhoroshiy, Chief of Laboratory of IOTT, U.S.S.R. Ministry of Coal Industry; and Voznyuk. Simultaneous translation was provided during all technical sessions as well as social functions of the symposium.

A second symposium luncheon was hosted by Edward Ungar, Director of Battelle's Columbus Laboratories (BCL), at which conference organizers James D. Kilgroe of EPA/IERL-RTP and Alexis W. Lemmon, Jr., of BCL were recognized.

Some technical highlights of the symposium include the paper presented by Nekhoroshiy of the Soviet delegation and several first-time reports on major ongoing coal cleaning research programs. "Primary Trends of Works on Environmental Protection Against the Influence of Coal-Preparation Plants in the U.S.S.R.", the subject of Nekhoroshiy's presentation, drew much audience interest. K. Randolph of Versar, Inc., reported in his paper on "Effluents from Coal Preparation" that proof has been obtained for the existence of priority pollutants in effluents from coal cleaning. J. McCreery of Battelle reported that the amount of low-sulfur coals which can be made available in the United States to meet the 1.2 lb $SO_2/10^6$ Btu NSPS is approximately 41 percent of total reserves as opposed to an earlier figure reported in the literature of 14 percent. Her presentation was "An Evaluation of the Desulfurization Potential of U.S. Coals".

The entire program on Thursday, September 14, provided a detailed overview of the plans and progress of the environmental assessment of coal cleaning. The methodological approaches shared will be of use to many current and future coal cleaning developments. Perhaps the most useful result of the program was the mutual opportunity to review and discuss the physical and chemical coal cleaning programs of EPA, DOE, the Electric Power Research Institute, and numerous industrial organizations, the problems of ongoing operations, and European and Soviet plans for the future.

Proceedings of the symposium have been prepared and distributed.[17]

List of Papers at Coal Cleaning Symposium Prepared by Battelle Staff

P-1 "Interpreting Statistical Variability"
Ralph E. Thomas

P-2 "An Integrated Assessment of Coal Technologies"
Richard Davidson

P-3 "An Evaluation of the Desulfurization Potential of U.S. Coals"
Jane H. McCreery and Fredrick K. Goodman

P-4 "The Use of Coal Cleaning for Complying with SO_2 Emission Regulations"
Elton Hall and Gilbert Raines

P-5 "Statistical Correlations on Coal Desulfurization by Crushing and Specific Gravity Separation"
Ralph E. Thomas

P-6 "Review of Regulations and Standards Influencing Coal Cleaning"
P. Van Voris, R. A. Ewing, and J. W. Harrison

P-7 "Development of Environmental Assessment Criteria for Coal Cleaning Processes"
R. A. Ewing, P. Van Voris, B. Cornaby, and G. E. Raines

P-8 "Methodology Application to Homer City Background Data: Comparison with MEG Values"
D. A. Tolle, D. P. Brown, R. Clark, D. A. Sharp, J. M. Stilwell, and B. W. Vigon

P-9 "An Overview of Control Technology"
Alexis W. Lemmon, Jr., Gerald L. Robinson, and David Sharp

P-10 "Status of Hydrothermal Processing for Chemical Desulfurization of Coal"
E. P. Stambaugh, H. N. Conkle, J. F. Miller, E. J. Mezey, and B. C. Kim

Reports and Other Documents Prepared or in Preparation on U.S. Environmental Protection Agency Contract No. 68-02-2163 by Battelle's Columbus Laboratories

(1) Spaite, P., and Min, S., "Environmental Assessment of Coal Cleaning Processes: Technology Overview", special report, in preparation for review and publication.

(2) Min, S., Ballantyne, W. E., Neuendorf, D. W., and Sharp, D. A., "Pollution Control Technology for Coal Cleaning Processes", draft special report submitted in June 1977 (not to be published).

(3) Ewing, R. A., Tolle, D. A., Min, S., Raines, G. E., and Holoman, V. L., "Development of Environmental Assessment Criteria", preliminary report, April, 1977 (not to be published).

(4) Ewing, R. A., Cornaby, B. W., Van Voris, P., Zuck, J. C., Raines, G. E., and Min, S., "Development of Criteria for the Assessment of Environmental Pollutants Associated with Coal Cleaning Processes", special report, in review prior to publication.

(5) Hale, V. Q., Clark, R., Stilwell, J. M., and Neuendorf, D. W., "Development of the Environmental Test Program", draft special report submitted September 30, 1977 (not to be published).

(6) Tolle, D. A., Thomas R. E., Markarian, R. K., and Hale, V. Q., "Environmental Assessment of Coal Cleaning Processes: Selection of Test Sites", special report, in review prior to publication.

(7) Alexander, C. A., Howes, J. E., Heffelfinger, R. E., and Paris, B., "Environmental Assessment of Coal Cleaning Processes: Sampling and Analysis Methods", special report, in review prior to publication.

(8) Tolle, D. A., Neuendorf, D. W., and Van Voris, P., "Environmental Assessment of Coal Cleaning Processes: Source Test Program", special report, in print by U.S. EPA.

(9) Tolle, D. A., and Van Voris, "Environmental Assessment of Coal Cleaning Processes", "Environmental Assessment of Coal Cleaning Processes: Site Category I Test Plan", draft special report submitted June 15, 1978 (not to be published).

(10) Rogers, S. E., Tolle, D. A., Brown, D. P., Clark, R., Sharp, D., Stilwell, J., and Vigon, B. W., "Environmental Assessment of Coal Cleaning Processes: Homer City Power Complex", special report, in review prior to publication.

(11) Rogers, S. E., Tolle, D. A., Brown, D. P., Clark, R., Sharp, D., Stilwell, J., and Vigon, B. W., "Supplemental Materials to Environmetal assessment of Coal Cleaning Processes", draft special report submitted May 11, 1979 (not to be published).

(12) Goodman, F. K., and McCreery, J. H., "Coal Preparation Plant Computer Model Users Handbook", special report in preparation for review and publication.

(13) Igou, R. D., "On-Line User Guide for CCIC", draft special report (not to be published).

(14) Coal Cleaning Environmental Review, Vol. 1, No. 1, Fall 1977; Vol. 2, No. 1, Summer 1978; Vol. 2, No. 2, Winter 1978-79.

(15) Hall, E. H., Hoffman, L., Hoffman, J., and Schilling, R. A., "Physical Coal Cleaning for Utility Boiler SO_2 Emission Control", special report, EPA-600/7-78-034, February 1978.

(16) Hall, E. H., Lemmon, A. W., Jr., Goodman, F. K., McCreery, J. H., and Robinson, G. L., Thomas, R. E., Smith, P., and Moore, D. D., "The Use of Coal Cleaning for Compliance with SO_2 Emission Regulations", special report in preparation for review and publication.

(17) Symposium Proceedings: Coal Cleaning to Achieve Energy and Environmental Goals, edited by S. E. Rogers and A. W. Lemmon, Jr., in print by U.S. EPA.

(18) Lemmon, A. W., Jr., Rogers, S. E., Robinson, G. L., Hale, V. Q., and Raines, G. E., "Environmental Assessment of Coal Cleaning Processes: First Annual Report", in print.

(19) Lemmon, A. W., Jr., Robinson, G. L., Van Voris, P., and Rogers, S. E., "Environmental Assessment of Coal Cleaning Processes: Second Annual Report", in preparation for review and publication.

(20) Lemmon, A. W., Jr., Robinson, G. L., Rogers, S. E., Van Voris, P., "Environmental Assessment of Coal Cleaning Processes: Final Report", in preparation for review and publication.

(21) Lemmon, A. W., Jr., Robinson, G. L., and Rogers, S. E., "Environmental Assessment of Coal Cleaning Processes", monthly progress reports for July 1976 through June 1979.

APPENDIX A

SYMPOSIUM PROGRAM

EPA Symposium on Coal Cleaning to Achieve Energy and Environmental Goals

FINAL PROGRAM

EPA Symposium on Coal Cleaning to Achieve Energy and Environmental Goals

Symposium Chairman
James D. Kilgroe
U.S. EPA, IERL-RTP

Symposium Cochairman
Alexis W. Lemmon, Jr.
Battelle's Columbus Laboratories

Monday, September 11, 1978

1:00—Registration—Mezzanine Lounge

Session 0: Coal Characteristics

2-5 p.m.—Regency West

Chairman: David A. Kirchgessner
U.S. EPA
Industrial Environmental Research Laboratory (IERL-RTP)

Cochairman: Harold L. Lovell
Pennsylvania State University

2:00 **Petrography of Coal**
Ron W. Stanton
U.S. Geological Survey

2:20 **Mineralogic Affinities of Trace Elements in Coal**
Faith Fiene
Illinois State Geological Survey

2:50 **Effects of Coal Cleaning on Elemental Distributions**
Charles T. Ford and James F. Boyer, Jr.
Bituminous Coal Research

3:20 *Coffee Break*

3:30 **Particle Size Distribution in Liberation of Pyrite**
Harold L. Lovell
Pennsylvania State University

4:00 **Contaminants in Coal: Geology and Size—Gravity Separations**
C. Blaine Cecil
U.S. Geological Survey

4:30 **Interpreting Statistical Variability**
Ralph E. Thomas
Battelle's Columbus Laboratories

7-9 p.m. **Welcome Reception—Regency North**

Tuesday, September 12, 1978

8:00 a.m.—Registration—Mezzanine Lounge

Session 1: Coal Cleaning Overview

Morning Program—9 a.m.-12 Noon

Chairman: James D. Kilgroe
U.S. EPA, IERL-RTP

9:00 **Welcome**
Norbert Jaworski, Deputy Director
U.S.EPA, IERL-RTP

9:15 **Introductory Remarks**
James D. Kilgroe, Symposium Chairman
U.S. EPA, IERL-RTP

9:30 **Overview of EPA Coal Cleaning Programs**
David A. Kirchgessner and James D. Kilgroe
U.S. EPA, IERL-RTP

10:00 **Overview of DOE Coal Cleaning Programs**
Cyril W. Draffin
Department of Energy (DOE)

10:30 *Coffee Break*

10:45 **Overview of EPRI Coal Cleaning Programs**
Kenneth Clifford and Shelton Ehrlich
Electric Power Research Institute

11:15 **An Integrated Assessment of Coal Technologies**
Roger Hansen
U.S. EPA, IERL-RTP
Richard Davidson
Battelle's Columbus Laboratories

12:00 Noon Luncheon—Les Ambassadeurs Room
Impacts of the 1977 Clean Air Act Amendment
Luncheon Speaker: Frank Princiotta
Office of Energy, Minerals and Industry
U.S. Environmental Protection Agency

Afternoon Program — 2-5 p.m.

Chairman: Kenneth Clifford
Electric Power Research Institute

2:00 **Environmental Protection Against the Influence of Coal-Preparation Plants in the USSR**
I. S. Blagov, G. G. Vosnyuk, V. V. Kochetov, I. Ch. Nekhoroshy, and I. E. Cherevko
USSR, Ministry of Coal

2:30 **Clean Fuel Supply Requirements for the OECD Countries**
Gary J. Foley
Organization of Economic Cooperation and Development
Richard Livingston
U.S. Environmental Protection Agency

3:00 **A Technical and Economic Overview of Coal Cleaning**
Horst Huettenhain, Bechtel Corporation
Samuel Wong, Argonne National Laboratory

3:30 *Coffee Break*

3:45 **An Evaluation of Institutional, Economic, Regulatory and Legislative Barriers to Investment in Physical Coal Cleaning as an SO_2 Emission Control Strategy**
Karel Fisher and Peter M. Cukor
Teknekron, Inc.

4:15 **Economics of Coal Cleaning and Flue Gas Desulfurization for Compliance with Revised NSPS for Utility Boiler**
R. M. Cole
Tennessee Valley Authority

4:45 **Impact of Transportation and Beneficiation on the Utilization of High Sulfur Coal**
C. Phillip Baumel, Thomas P. Drinka and John J. Miller
Ames Laboratory, Iowa State University

Wednesday, September 13, 1978

Session 2: Physical Coal Cleaning Technology

Morning Program — 9 a.m.-12 Noon

Chairman: Richard E. Hucko
Coal Preparation and Analysis Laboratory
U.S. Department of Energy

9:00 **An Evaluation of the Desulfurization Potential of U.S. Coals**
Jane H. McCreery and Fredrick K. Goodman
Battelle's Columbus Laboratories

9:30 **The Use of Coal Cleaning for Complying with SO_2 Emission Regulations**
Elton Hall, Battelle's Columbus Laboratories
Gilbert E. Raines, Resource Dynamics, Inc.

10:00 **Statistical Correlations on Coal Desulfurization by Crushing and Specific Gravity Separation**
Ralph E. Thomas
Battelle's Columbus Laboratories

10:30 *Coffee Break*

10:45 **Dewatering and Drying of Fine Coal: Performance and Costs**
Donald Sargent and William Cheng
Versar Inc.

11:15 **Homer City Coal Cleaning Demonstration, Test, and Technology Evaluation Program**
James H. Tice
Pennsylvania Electric Company

11:45 **Computer Control of Coal Preparation**
Gerry Norton, Clive Longden, and George Hambleton
Norton, Hambleton Associates

Afternoon Program — 2-5 p.m.

Chairman: Kenneth Harrison
Heyl & Patterson, Inc.

2:00 **Physical and Physicochemical Removal of Sulfur from Coal**
Ray W. Fisher and David Birlingmair
Ames Laboratory
Iowa State University

2:30 **Cleaning of Eastern Bituminous Coals by Fine Grinding, Froth Flotation and High Gradient Magnetic Separation**
W. L. Freyberger, J. W. Keck, D. W. Spottiswood, N. D. Solem and Virginia L. Doane
Michigan Technological University

3:00 **The Potential of Magnetic Separation in Coal Preparation**
Frederick V. Karlson, Horst Huettenhain, William W. Slaughter
Bechtel National Inc.
Kenneth L. Clifford
EPRI

3:30 *Coffee Break*

3:45 **Testing of Commercial Coal Preparation Plants with a Mobile Laboratory**
William Higgins and Thomas Plouf
Joy Manufacturing Co.

4:15 **Chemical Comminution—an Improved Route to Clean Coal**
V. C. Quackenbush, R. R. Maddocks, and G. W. Higginson
Catalytic, Inc.

4:45 **Coal Cleaning by the Otisca Process**
Speaker to be announced

6-9 p.m. **Social Hour and Banquet**— Les Ambassadeurs Room
Tomorrow's Energy Supplies
Banquet Speaker: Richard J. Anderson
Formerly Associate Director, Battelle's Energy Program; Currently Consultant to Battelle Memorial Institute

Thursday, September 14, 1978

Session 3: Environmental Assessment and Pollution Control Technology

Morning Program—9 a.m.-12 Noon

Chairman: G. Ray Smithson, Jr.
Battelle's Columbus Laboratories

9:00 **Introduction to the EPA Program**
T. K. Janes
EPA, IERL-RTP

9:20 **Environmental Assessment Methodologies for Fossil Energy Processes**
R. P. Hangebrauck
EPA, IERL-RTP
J. L. Warren
Research Triangle Institute

9:50 ***Review of Regulations and Standards Influencing Coal Cleaning***
Peter Van Voris
Battelle's Columbus Laboratories
J. W. Harrison
Research Triangle Institute

10:20 *Coffee Break*

10:30 **Environmental Impact Assessment of Coal Cleaning Processes**
- Establishing Goals
  Barney W. Cornaby
  Battelle's Columbus Laboratories
- Overall Methodology
  Robert A. Ewing
  Battelle's Columbus Laboratories
- Biological Transport
  Peter Van Voris
  Battelle's Columbus Laboratories
- Physical Transport and Partition Functions
  Gilbert E. Raines
  Raines Consulting, Inc.

11:30 **Methodology Application to Homer City Background Data: Comparison with MEG Values**
D. A. Tolle
Battelle's Columbus Laboratories

12:00 Noon Luncheon—Les Ambassadeurs Room
Luncheon Host: Edward W. Ungar, Director
Battelle's Columbus Laboratories

Afternoon Program—2 p.m.-5 p.m.

Chairman: C. Grua
U.S. Department of Energy

2:00 **An Overview of Control Technology**
Alexis W. Lemmon, Jr., Gerald L. Robinson, and David Sharp
Battelle's Columbus Laboratories

2:30 **Effluents from Coal Preparation**
K. Randolph
Versar, Inc.

3:00 **Control of Trace Element Leaching from Coal Preparation Wastes**
E. M. Wewerka
Los Alamos Scientific Laboratory

3:20 *Coffee Break*

3:30 **Stabilization of Coal Preparation Plant Sludges**
David Hoffman
Dravo Lime Company

4:00 **Chemical and Biological Characterization of Leachate from Coal Cleaning Wastes**
R. A. Griffin, et al.
Illinois State Geological Survey

Friday, September 15, 1978

Session 4: Chemical Coal Cleaning

Morning Program — 9 a.m.-12 Noon

Chairman: Thomas D. Wheelock
Iowa State University

9:00 **Introduction to Chemical Cleaning**
R. A. Meyers
TRW Inc.

9:20 **Current Status of Chemical Coal Cleaning Processes—An Overview**
Lee C. McCandless and G. Y. Contos
Versar, Inc.

9:50 **Status of the Reactor Test Project for Chemical Removal of Pyritic Sulfur from Coal**
L. J. Van Nice and M. J. Santy
TRW Inc.
E. Bobalek and L. D. Tamny
U.S. EPA, IERL-RTP

10:20 *Coffee Break*

10:30 **Status of Hydrothermal Processing for Chemical Desulfurization of Coal**
E. P. Stambaugh, J. F. Miller, H. N. Conkle, B. C. Kim, and E. J. Mezey
Battelle's Columbus Laboratories

11:00 **Survey of Coals Treated by Oxydesulfurization**
R. P. Warzinski, S. Friedman, and F. W. Steffgen
Pittsburgh Energy Research Center—DOE

11:30 **Coal Desulfurization by Leaching with Alkaline Solution Containing Oxygen**
Richard Markuszewski, K. C. Chuang, and Thomas D. Wheelock
Ames Laboratory, Iowa State University

Afternoon Program — 2-5 p.m.

Chairman: Robin R. Oder
Gulf Research and Development Co.

2:00 **Potential for Chemical Coal Cleaning: Reserves, Technology, and Economics**
R. A. Giberti, R. S. Opalanko, and Joachim R. Sinek
Kennecott Copper Corp.

2:20 **JPL Coal Desulfurization Process by Low Temperature Chlorinolysis**
John J. Kalvinskas and George Hsu
Jet Propulsion Laboratory

2:40 **Oxidative Coal Desulfurization Using Nitrogen Oxides—the KVB Process**
E. D. Guth
KVB, Inc.

3:00 *Coffee Break*

3:20 **The Dry Removal of Pyrite and Ash from Coal by the Magnex Process—Process Variables and Clean Coal Properties**
James K. Kindig and Duane N. Goens
Hazen Research, Inc.

3:40 **Panel Discussion on Prospects for Characterization and Removal of Organic Sulfur from Coal**
Chairman: Robin R. Oder
Gulf Research and Development Co.
Panelists: Sidney Friedman
Pittsburgh Energy Research Center—DOE
Amir Attar
University of Houston
Douglas M. Jewell
Gulf Research and Development Co.
Thomas G. Squires
Iowa State University

TECHNICAL REPORT DATA
(Please read Instructions on the reverse before completing)

1. REPORT NO. EPA-600/7-79-073g	2.	3. RECIPIENT'S ACCESSION NO.
4. TITLE AND SUBTITLE Environmental Assessment of Coal Cleaning Processes: Second Annual Report		5. REPORT DATE December 1979
		6. PERFORMING ORGANIZATION CODE
7. AUTHOR(S) A.W. Lemmon, Jr., G.L. Robinson, P. Van Voris, and S.E. Rogers		8. PERFORMING ORGANIZATION REPORT NO.
9. PERFORMING ORGANIZATION NAME AND ADDRESS Battelle Memorial Institute Columbus Laboratories 505 King Avenue Columbus, Ohio 43201		10. PROGRAM ELEMENT NO. EHE623A
		11. CONTRACT/GRANT NO. 68-02-2163
12. SPONSORING AGENCY NAME AND ADDRESS EPA, Office of Research and Development Industrial Environmental Research Laboratory Research Triangle Park, NC 27711		13. TYPE OF REPORT AND PERIOD COVERED Annual; 10/77 - 11/78
		14. SPONSORING AGENCY CODE EPA/600/13

15. SUPPLEMENTARY NOTES IERL-RTP project officer is James D. Kilgroe, Mail Drop 61, 919/541-2851. First annual report was EPA-600/7-79-073b and -073c.

16. ABSTRACT The report describes the second year's work for EPA by Battelle's Columbus Laboratories on an environmental assessment of coal cleaning processes. Program activities included systems studies, data acquisition, and general program support. (1) Systems studies have been directed at: updating, refining, and developing new data on the technology of coal cleaning; summarizing previous efforts on the study of pollution control technology; continuing the development of environmental assessment criteria for pollutants associated with coal cleaning processes; and planning for pollution control trade-off studies. (2) Data acquisition included: selecting test sites and arranging for testing; selecting and documenting preferred procedures for sampling and analysis; designing the overall source test program; and preparing the specific test plan for the first category of sites to be tested. Ten test site categories were established, prioritized, and candidate sites were narrowed to 47. (3) General program support included: evaluation of environmental tests at the Homer City coal cleaning plant site and modification of a computer program for simulating performance of this and other coal cleaning plants; operation of the Coal Cleaning Information Center; an exchange of environmental information with the USSR; evaluation of coal cleaning to control SO2 emissions; and coordinating a symposium.

17. KEY WORDS AND DOCUMENT ANALYSIS

a. DESCRIPTORS	b. IDENTIFIERS/OPEN ENDED TERMS	c. COSATI Field/Group
Pollution	Pollution Control	13B
Assessments	Stationary Sources	14B
Coal	Coal Cleaning	08G
Coal Preparation		08I
Industrial Processes		13H

18. DISTRIBUTION STATEMENT Release to Public	19. SECURITY CLASS *(This Report)* Unclassified	21. NO. OF PAGES 55
	20. SECURITY CLASS *(This page)* Unclassified	22. PRICE

EPA Form 2220-1 (9-73)