EPA

AL/EQ-TR-1993-0002
EPA/600/R-94/214b

ARMSTRONG LABORATORY

DEMONSTRATION OF SPLIT-FLOW VENTILATION AND RECIRCULATION AS FLOW-REDUCTION METHODS IN AN AIR FORCE PAINT SPRAY BOOTH

S. Hughes, J. Ayer, R. Sutay

ARMSTRONG LABORATORY
ENVIRONICS DIRECTORATE
AL/EQS-OL
139 Barnes Drive, Suite 2
Tyndall AFB FL 32403-5323

Acurex Environmental Corporation
555 Clyde Avenue
P.O. Box 7044
Mountain View, CA 94039

US EPA/AEERL
MD-61
Research Triangle Park NC 27711

July 1994

Final Technical Report for Period February 1991 - October 1992

Approved for public release; distribution unlimited.

ARMSTRONG LABORATORY

AIR FORCE MATERIEL COMMAND
TYNDALL AIR FORCE BASE, FLORIDA 32403-5323

NOTICES

This report was prepared as an a account of work sponsored by an agency of the United States Government. Neither the United States Government nor any agency thereof, nor any employees, nor any of their contractors, subcontractors, or their employees, make any warranty, express or implied, or assume any legal liability or responsibility for the accuracy, completeness, or usefulness of any privately owned rights. Reference herein to any specific commercial product, process, or service by trade name, trademark, manufacturer, or otherwise, does not necessarily constitute or imply its endorsement, recommendation, or favoring by the United States Government or any agency, contractor, or subcontractor thereof. The views and opinions of the authors expressed herein do not necessarily state or reflect those of the United States Government or any agency, contractor, or subcontractor thereof.

When Government drawings, specifications, or other data are used for any purpose other than in connection with a definitely Government-related procurement, the United States Government incurs no responsibility or any obligation whatsoever. The fact that the Government may have formulated or in any way supplied the said drawings, specifications, or other data is not to be regarded by implication, or otherwise in any manner construed, as licensing the holder or any other person or corporation, or as conveying any rights or permission to manufacture, use, or sell any patented invention that may in any way be related thereto.

This technical report has been reviewed by the Public Affairs Office (PA) and is releasable to the National Technical Information Service (NTIS), where it will be available to the general public, including foreign nationals.

This report has been reviewed and is approved for publication.

JOSEPH D. WANDER, PhD
Technical Area Manager, Air Pollution Control Technology

MICHAEL G. KATONA, PhD
Chief Scientist, Environics Directorate

EDWARD N. COPPOLA, Maj., USAF
Chief, Environmental Compliance Division

NEIL J. LAMB, Col, USAF, BSC
Director, Environics Directorate

REPORT DOCUMENTATION PAGE

Form Approved
OMB No. 0704-0188

Public reporting burden for this collection of information is estimated to average 1 hour per response, including the time for reviewing instructions, searching existing data sources, gathering and maintaining the data needed, and completing and reviewing the collection of information. Send comments regarding this burden estimate or any other aspect of this collection of information, including suggestions for reducing this burden, to Washington Headquarters Services, Directorate for information Operations and Reports, 1215 Jefferson Davis Highway, Suite 1204, Arlington, VA 22202-4302, and to the Office of Management and Budget, Paperwork Reduction Project (0704-0188), Washington, DC 20503.

1. AGENCY USE ONLY *(Leave blank)*

2. REPORT DATE
940727

3. REPORT TYPE AND DATES COVERED
Final, 910215 to 921009

4. TITLE AND SUBTITLE
Demonstration of Split-flow Ventilation and Recirculation as Flow-reduction Methods in an Air Force Paint Spray Booth

5. FUNDING NUMBERS
Contract 68-D2-0063
Work Assignment 0/002
Program element 63723F
Project 2103
Task 70
Work unit accession 97

6. AUTHOR(S)
S. Hughes and J. Ayer; R. Sutay, CIH (Section VI)

7. PERFORMING ORGANIZATION NAME(S) AND ADDRESS(ES)
Acurex Environmental Corporation
555 Clyde Avenue
P.O. Box 7044
Mountain View, CA 94039

8. PERFORMING ORGANIZATION REPORT NUMBER
FR-93-115

9. SPONSORING/MONITORING AGENCY NAME(S) AND ADDRESS(ES)
U.S. EPA
AEERL
MD-61
Research Triangle Park, NC 27711

Armstrong Laboratory
Environics Directorate
AL/EQS-OL
139 Barnes Drive, Suite 2
Tyndall AFB, FL 32403-5323

10. SPONSORING/MONITORING AGENCY REPORT NUMBER
AL/EQ-TR-1993-0002
EPA/600/R-94/214b

11. SUPPLEMENTARY NOTES
1. Responsible individual: Joseph D. Wander, (904) 283-6240
2. Office symbol: AL/EQS-OL
3. Availability of report is specified on inside front cover.

12a. DISTRIBUTION/AVAILABILITY STATEMENT
Approved for public release; distribution is unlimited.

12b. DISTRIBUTION CODE

13. ABSTRACT *(Maximum 200 words)*

During a series of painting operations in a horizontal-flow paint spray booth at Travis AFB, CA, baseline concentrations of four classes of toxic airborne pollutants were measured at 24 locations across a plane immediately forward of the exhaust filters, in the exhaust duct, and inside and outside the respirator in the painter's breathing zone (BZ). The resulting data were analyzed and used to design a modified ventilation system that (1) separates a portion of the exhaust exiting the lower portion of the booth, which contains a concentration of toxic pollutants greater than the average at the exhaust plane (split-flow); and (2) provides an option to return the flow from the upper portion of the exhaust to the intake plenum for mixing with fresh air and recirculation through the booth (recirculation). After critical review by cognizant Air Force offices, and an experimental demonstration showing that a flame ionization detector monitoring the air entering the booth is able to detect excursions above the equivalent exposure limit for the solvents in the paint, the exhaust duct was reconfigured for split-flow and recirculating ventilation. A volunteer painter was briefed on the increased risk of exposure during recirculation, and on the purposes and possible benefits of this study. He then signed an informed consent form before participating in the recirculation tests. A series of tests generally equivalent to the baseline series was conducted during split-flow and

14. SUBJECT TERMS
Air pollution, emission control technology, exhaust recirculation, paint spray booth, ventilation

15. NUMBER OF PAGES
Vol. I, 132; Vol. II, 179

16. PRICE CODE

17. SECURITY CLASSIFICATION OF REPORT	18. SECURITY CLASSIFICATION OF THIS PAGE	19. SECURITY CLASSIFICATION OF ABSTRACT	20. LIMITATION OF ABSTRACT
Unclassified	Unclassified	Unclassified	

NSN 7540-01-280-5500

Standard Form 298 (Rev. 2-89)
Prescribed by ANSI Std. 239-18
298-102

recirculating ventilation, and three tests were performed during only split-flow ventilation. Data from the two sets of tests show that pollutants concentrate toward the bottom of the booth during ordinary painting operations; that local processes associated with circulation near the paint spray gun contribute far more to the net exposure to the painter than do toxic pollutants in the recirculated air stream; and that, under well-ventilated conditions, including split-flow and recirculation of a large fraction of the exhaust air, equivalent exposures to airborne toxic pollutants (calculated as the sum of 8-hour, time-weighted concentrations of toxicants divided by their respective Permissible Exposure Limits) should not exceed 0.25 in the intake air. An economic analysis of costs to implement thermal or catalytic incineration, with and without flow reduction by split-flow and recirculating technologies, projects substantial savings, such that the payback periods for inclusion of flow-reduction technology during installation of the control device are about 1 year. The recirculation of air in the paint spray booth did not result in an increase in air contaminants that would exceed the capability of proper respiratory protection. The magnitude of the incremental increase in exposure derives primarily from particulates in the recirculated air. This is defined by the particulate removal efficiency of the particulate controls, which can be compromised by improper maintenance. However, with proper design, installation, and maintenance, the increment to risk is normally less than the round-off errors in the calculation of net job-related risk. Because the cost benefit is obtained at an increase of risk of exposure to painters, the acceptability of this cost-benefit tradeoff will have to be resolved by industrial hygiene functions at both policy and local levels before this advance can be implemented at Air Force installations.

SUMMARY

A. OBJECTIVE

The objective of this program was to demonstrate that split-flow and recirculating ventilation, individually and in combination, are safe and cost-effective methods of reducing paint spray booth exhaust flow rates to lower the costs both of conditioning intake air and of controlling volatile organic compound (VOC) emissions in exhaust air.

B. BACKGROUND

This study was part of an extended program of investigations into the cost and efficacy of innovative approaches for bringing U.S. Air Force industrial operations into compliance with current and anticipated air pollution environmental standards. Adequate ventilation of paint spray booths requires the movement of large quantities of air, which are slightly contaminated during passage through the booth. Air exhausted from this process requires decontamination, which, although technically achievable at operating flow rates, can be prohibitively expensive. Because emission-control costs depend on the volume of exhaust air being treated, considerable savings can be realized through the application of an acceptable flow-reduction method.

A first principle of industrial hygiene is to employ engineering controls to their limit before invoking personal protection. In dealing with exposures to airborne toxics, the mainstay engineering device is enhancement of ventilation. However, increased ventilation creates enormous volumes of slightly contaminated air, which must be treated before discharge and, in many situations, the cost of such treatment is excessive. In such circumstances, a judgment must be made about the relative cost in increased exposure compared to the economic benefit in decreased operating cost. The goal of this study was to provide experimental data to support the development of a general Air Force position and objective criteria for local decisions about the acceptability of using flow-reduction methods in paint spray booths, based on local health-risk/cost-benefit considerations.

C. SCOPE

This study comprised two sets of experimental measurements in Booth 2, Building 845, Travis Air Force Base (AFB), California, plus the results of an ancillary effort conducted at Research Triangle Institute (RTI) to verify experimentally that the flame ionization detector (FID) used in the ventilation control loop is within its linear response range at the equivalent exposure limit for the mixture of solvents present in the mixed topcoat. The first set of experimental measurements was a baseline characterization of the distribution of toxic pollutants at the exhaust face and in the exhaust duct of Booth 2. These data, the RTI results, and the test plan for the second set of tests were reviewed by HQ AFLC/SGBE before approval was given to proceed with the recirculation tests. The test plan and engineering drawings were reviewed by the Fire Department, Safety Office, and Civil Engineering Office at Travis AFB and approved before implementation. For the second set of tests, the ductwork in Booth 2 was reconfigured to separate exhaust streams from the top and bottom of the booth (split-flow) and to return the upper exhaust stream to the intake plenum for recirculation through the booth. The volunteer painter was briefed and signed an informed consent form before participating in the study. During separate painting sessions, several sets of concentration measurements were made of VOCs, particulates, heavy metals, and isocyanates. Equivalent exposures (E_m) were calculated from these data, and projections of E_m were made for a range of recirculation ratios, together

with an economic analysis of the corresponding costs to install flow reduction technology and apply VOC emission control devices.

D. METHODOLOGY

Per standard Travis AFB policy, painters in Booth 2 wear a protective jump suit, a separate hood, and an airline respirator. To determine exposure concentrations, sampling was performed simultaneously inside and outside the respirator, at 24 locations at the exhaust face, in the exhaust ducts, and, during the second set of tests, at three locations at the face of each of the two intake filters. To determine environmental contributions to the load of pollutants, background air samples were collected at the back of the booth prior to the release of any paint-derived materials. Standard sampling methods used were National Institute of Occupational Safety and Health (NIOSH) Method 1300 (integrated measurement of individual organic species), Bay Area Air Quality Management District (BAAQMD) Method ST-7 and U.S. Environmental Protection Agency (EPA) Method 25A (continuous measurement of total organic concentration), Occupational Safety and Health Administration (OSHA) Method 42 (filter faces and ducts) and NIOSH Method 5521 (painter and ducts) (isocyanates), EPA Method 5 and NIOSH Method 500 (particulate), and EPA Draft Multiple Metals and NIOSH Method 7300 (metals). Paint usage was determined by weighing the gun after each filling and at the end of each painting session. The percent volatile content of the paint was determined gravimetrically, as percent weight loss to evaporation. Airflows were measured with an anemometer (American Conference of Governmental Industrial Hygienists [ACGIH]) in the booth and with a pitot tube (EPA 2) in the exhaust ducts. Painting start and stop times were recorded manually by an observer, stationed at the rear of the booth, who also noted the dimensions and locations of workpieces painted, coatings applied, and other details. Projections of equivalent exposures at different recirculation ratios were calculated by a Lotus 1-2-3 program written at U.S. EPA-Air and Energy Engineering Research Laboratory (AEERL).

E. TEST DESCRIPTION

In both test series, representative workpieces were prepared and coated according to normal operating procedures. During each such painting run, measurements were made of one of the four pollutant classes using the methods specified in Section D. A typical painting session lasted 30 to 90 minutes, and included postpainting cleaning of the paint spray gun with methyl ethyl ketone (MEK) and tidying up of the area. In general, two sets of tests were accomplished during an 8-hour shift, corresponding to a typical workday. A complete series of blood chemistry parameters was determined for the painter at the conclusion of the testing.

F. RESULTS

Concentrations of airborne toxic pollutants are recorded in the tables of the report. Strontium chromate occurs as the major contaminant during primer coating and was the largest contributing factor to the E_m. Organic exposures were minor during all painting exercises, except that high isocyanate exposure occurred outside, but not inside, the painter's respirator during topcoat application inside a comfort pallet (caused by airflow restrictions in the closed space, and unrelated to the mode of ventilation in the booth). The newly constructed recirculation duct was a source of several metals. These metals were included in E_m calculations, but the concentrations are expected to decrease after the newly constructed surfaces are blown clean. Contributions to E_m from recirculation are significantly less than the Air Force criterion of 0.25 imposed by HQ AFLC/SGBE for these tests, and much less, in

general, than the contribution from the painting process. The painter showed no evidence of overexposure during the posttest medical evaluation.

G. CONCLUSIONS

Data support the prediction that workplace exposure levels during recirculation of paint spray booth exhausts, especially combined with split-flow extraction of the pollutant-enriched lower portion of the exhaust stream, can be maintained less than an arbitrarily selected criterion (here, E_m = 0.25). Flow splitting as a technology is only marginally effective; however, in combination with recirculation, it acts to lower the concentrations in the recirculated stream at a given rate of recirculation. Computational projection of E_m to larger recirculation rates, and interpolation of results of an earlier economic analysis of scale-related costs to decontaminate exhaust air, indicate that available cost savings allow projected payback periods on the order of 1 year for thermal or catalytic incineration.

H. RECOMMENDATIONS

Improvements should be examined to augment or replace present-generation filter and water particulate control systems. Concurrently, or when the improved technologies satisfy local standards, a combination of flow reduction and VOC control should be implemented in an area of intense regulatory pressure as the definitive prototype. A standardized set of criteria should be established to guide site selection, design, installation, and maintenance.

(The reverse of this page is blank)

PREFACE

This final report was prepared by Acurex Environmental Corporation, 555 Clyde Avenue, Mountain View, CA 94043, under Contract No. 68-D2-0063, for the U.S. Environmental Protection Agency (EPA), Air and Energy Engineering Research Laboratory (AEERL), and the Armstrong Laboratory Environics Directorate (AL/EQ), 139 Barnes Drive, Tyndall Air Force Base (AFB) FL 32403-5323. The industrial hygiene evaluation was performed by Clayton Environmental Consultants, 1252 Quarry Lake, Pleasanton, CA 94566.

This report describes measurements of background concentrations of airborne toxic pollutants in Booth 2, Building 845, Travis AFB, CA; design and construction of modifications to the booth ventilation system; measurements of airborne toxic pollutants in the modified booth during split-flow and concurrent split-flow and recirculating ventilation; and a projective analysis of equivalent personnel exposures and net costs to operate flow reduction and emission control systems at varying recirculation ratios. The work was performed between February 1991 and September 1992. The Air Force project officer was Dr. Joseph D. Wander. EPA project managers were Charles H. Darvin and Jamie K. Whitfield.

Indispensable cooperation and support were provided by a number of Air Force functions. Ted Liston (60 EMS/MAEFP) provided facilities in Building 845 and practical advice; Terry Kirkbride (60 EMS/MAEFP) and Mark Sandy (60 ABG/EM) managed coordination with cognizant Travis functions and solicited volunteer painters; Sgt. Bill Fleming and Bill Harrison painted during the baseline and split-flow tests, respectively; Richard Smith painted during the recirculating ventilation tests; TSgt. Haugen (DGMC/SGPM) saw to the posttest evaluation of Mr. Smith and secured his release of the test results; Det 6 AL/SAO, Brooks AFB TX, performed metals and isocyanate analyses; Major John Seibert, Det 6 AL/EHI and the designee of Col. Bruce Poitrast, AL/OE-CA, was an active contributor to discussions of baseline data and the test plan for the recirculation tests; Col. Phil Brown, HQ AFLC/SGBE, accepted responsibility for authorizing the performance of the recirculation tests, after several iterative discussions of these baseline results plus data and conclusions from experimental verification of the capability of flame ionization detector (FID) technology to reliably detect equivalent exposure limit of a complex (specified) mixture of paint solvents. Major Steve Bakalyar, AL/OEMI, offered constructive suggestions and contributed to the final version of this document.

(The reverse of this page is blank)

TABLE OF CONTENTS

Section	Title	Page
APPENDIX D —	BOOTH MODIFICATION DESIGN AND CONSTRUCTION PACKAGE	1
APPENDIX E —	ORGANIC DESORPTION STUDY	25
APPENDIX F —	REDUCED DATA FOR THE BASELINE TEST SERIES	30
APPENDIX G —	REDUCED DATA FOR THE POSTMODIFICATION TEST SERIES	47
APPENDIX H —	QUALITY ASSURANCE/QUALITY CONTROL EVALUATION	158
APPENDIX I —	ECONOMIC CALCULATIONS	163
APPENDIX J —	EXAMPLE CALCULATION WORKSHEET FOR PERCENT RECIRCULATION VERSUS PERCENT PARTICULATE REMOVAL EFFICIENCY	168

(The reverse of this page is blank)

APPENDIX D

BOOTH MODIFICATION DESIGN AND CONSTRUCTION PACKAGE

The booth modifications are illustrated in the accompanying schematics and described briefly below.

A. DUCT MODIFICATIONS

Downstream of the existing exhaust blower (exhaust fan 1) a 48-inch-diameter sheetmetal tee was installed in the existing duct. Two motor-operated, 48-inch-diameter air dampers were installed on the exhaust ports of the tee (dampers 1 and 2). Damper 2 was installed on the downstream side of the tee and between the tee and the continuation of the existing 48-inch-diameter duct. It controls the flow of exhausted gases to the atmosphere outside the building. Damper 1 was installed on the branch side of the tee and controls the flow of exhausted gases to the inlet duct for recirculation. A new 48-inch-diameter sheetmetal duct was installed between damper 1 and the existing fresh air supply duct.

Control of the two damper air motors is regulated by Analysis Safety Valve (ASV)-1 (ASCO Model 834911), a four-way dual solenoid valve, which allows plant air to flow to or vent from the air motors according to the feedback control system (discussed below). In the event of power loss, the solenoid valve fails to the fail-safe mode, *i.e.*, the single-pass position, which closes damper 1 and opens damper 2, thus diverting all exhaust gases to the atmosphere outside the building.

In addition to modifications to the existing ducts, a new 30-inch-diameter axial blower and duct was installed to vent the lower chamber of the plenum.

B. FEEDBACK CONTROL SYSTEM

A failsafe damper interlock control system was designed to respond to an instantaneous emission peak exceeding the STEL action level and to a 60-second emission level at or above the TLV.

The interlock system (see drawings 8380E100 and 8380E101) was equipped with the following features:

- Total unburned hydrocarbon (TUHC) analyzer (Ratfisch Instruments type RS 55CA heated total hydrocarbon analyzer FID) (ASE-1/AST-1).
- Failsafe controls (ASA-1/ASV-1):
  - An instantaneous interlock to begin single-pass operation when STEL concentration action level is exceeded.
  - An adjustable timer (set at 5 minutes) to ensure single-pass operation for a predetermined time after STEL or TLV interlock activation, prior to converting back into the recirculation configuration.

- An adjustable timer (set at 60 seconds) to delay operation of the TLV concentration interlock for 1 minute while continuing monitoring operations. If, after 1 minute, the concentration is still above TLV, the system initiates the single-pass mode.

- An indicator light to indicate that the 60-second TLV concentration timer is "on."

- An interlock to convert the system to single-pass mode if the hydrocarbon analyzer power is turned off or its flame goes out.

- A solenoid valve wired and plumbed to return to the single-pass operation mode whenever there is a power loss.

C. PERMIT VARIANCES

At the start of this study, the paint booth was operational and permitted for use in the single-pass mode. In conversations with the Bay Area Air Quality Management District (BAAQMD), it was determined that a new permit to operate the booth after modification was unnecessary; a notification letter to BAAQMD in advance of the modification sufficed.

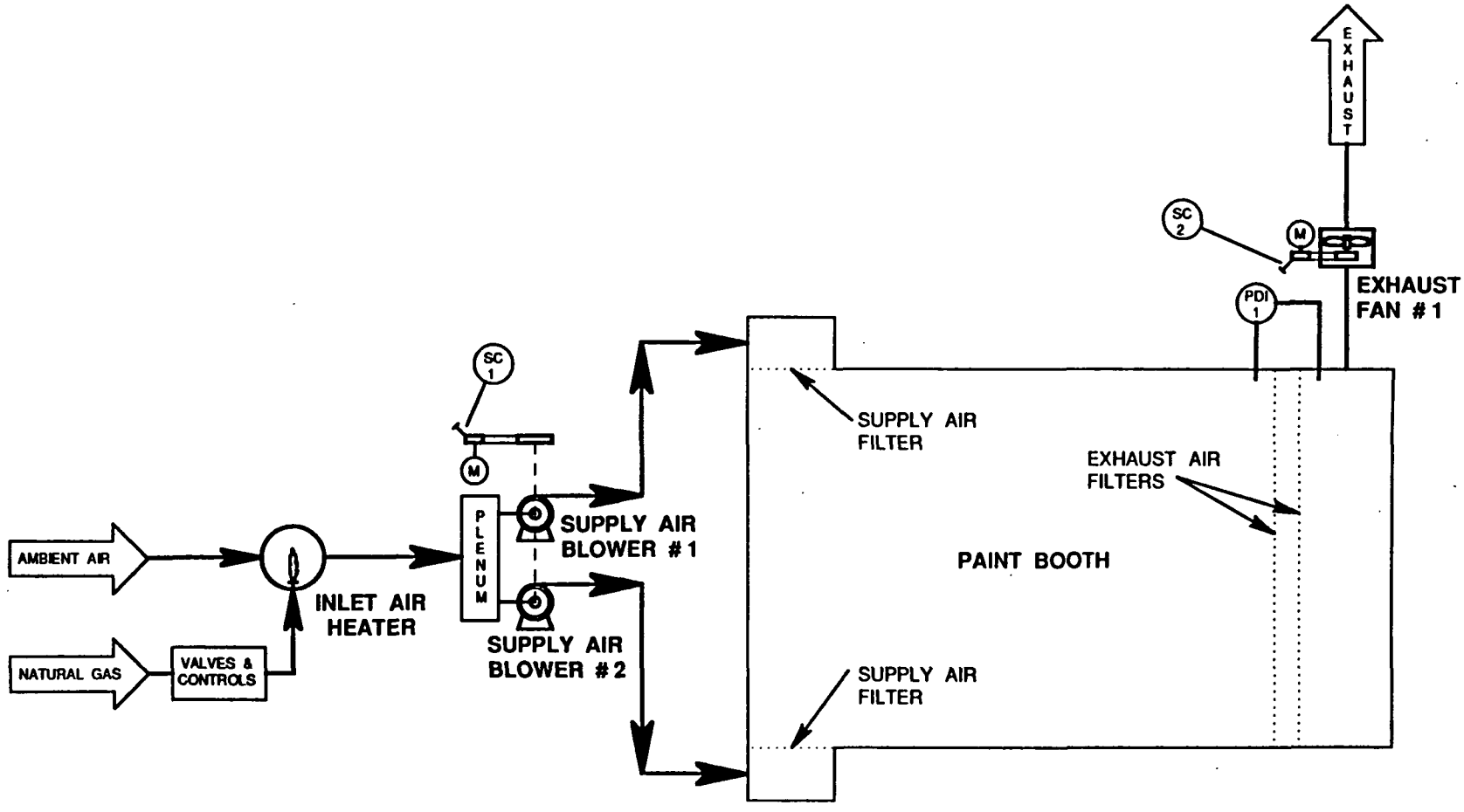

Process and Instrumentation Diagram
Travis AFB Building 845
Paintbooth No. 2 Prior to Modification

NOTES:

1. ALL DIMENSIONS ARE APPROXIMATE AND SHALL BE FIELD VERIFIED.
2. TRANSITION PIECE SHALL BE MADE IN SECTIONS WHICH CAN BE PASSED THROUGH THE EXISTING PERSONNEL DOOR.
3. TRANSITION PIECE SHALL INCLUDE ALL SUPPORTS AND FASTENERS.

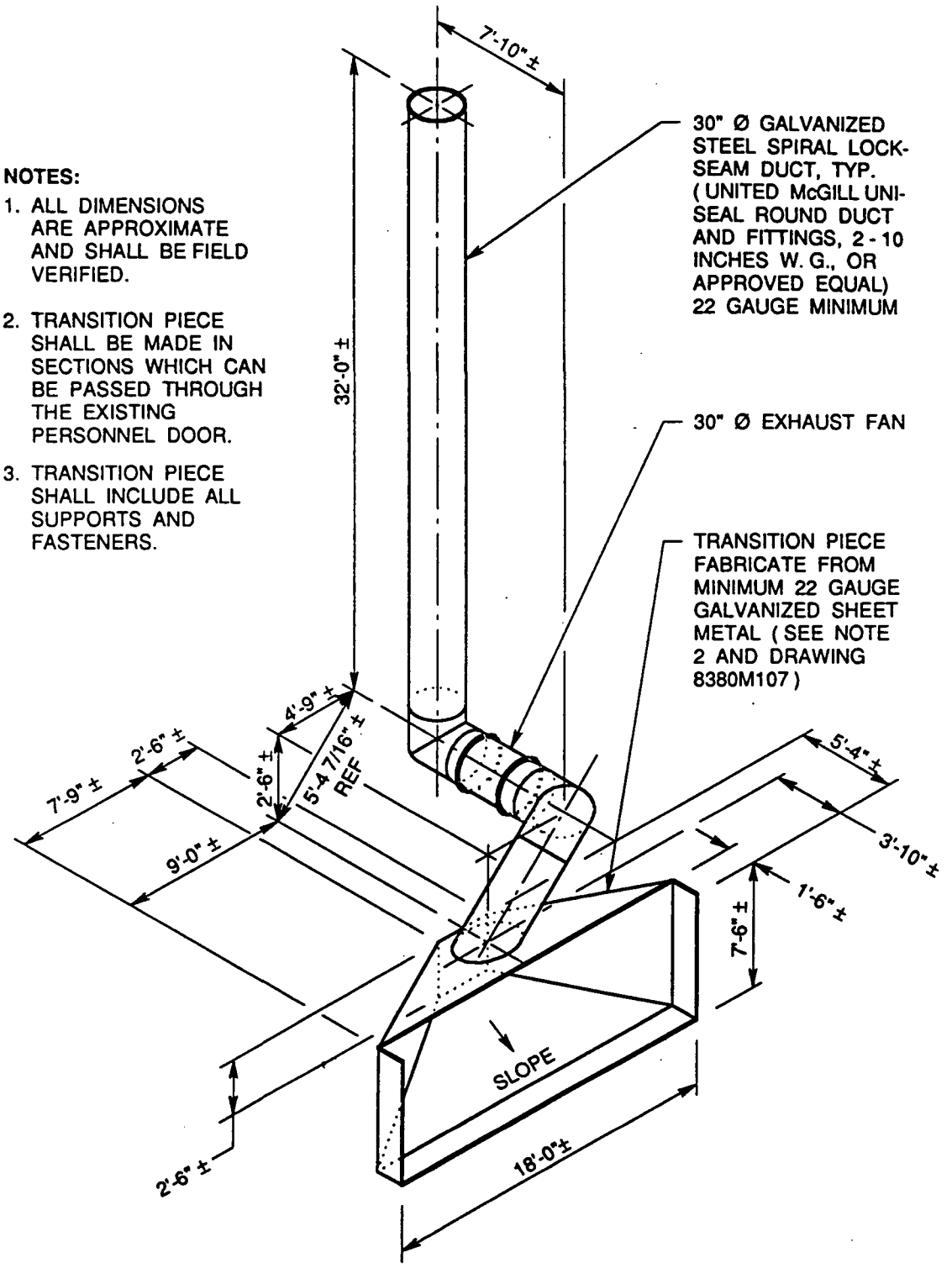

Lower Exhaust Plenum Chamber
Transition Piece and Exhaust Duct Isometric
for Travis AFB Building 845 Paintbooth No. 2

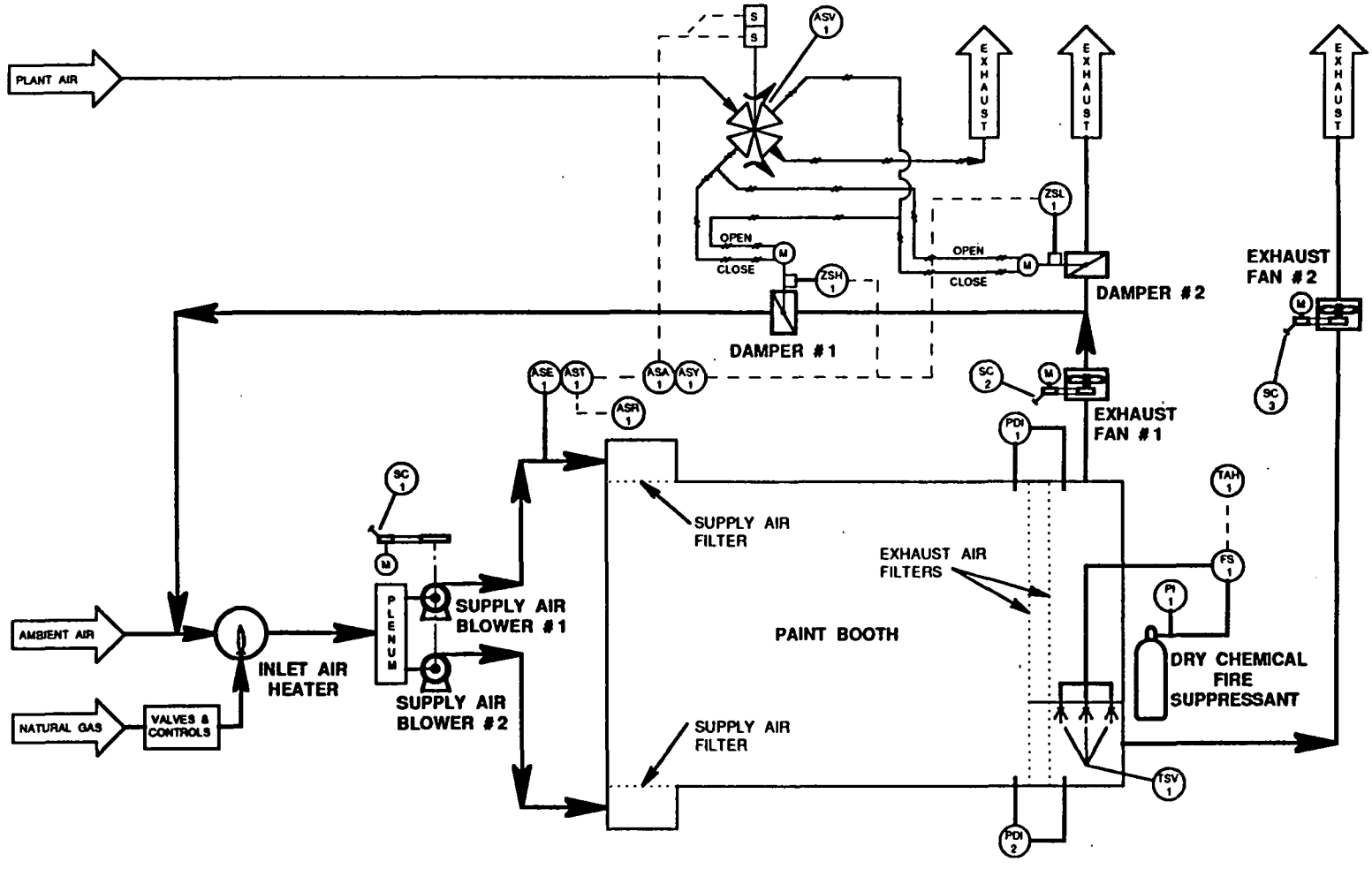

Process and Instrumentation Diagram
Travis AFB Building 845
Paintbooth No. 2 After to Modification

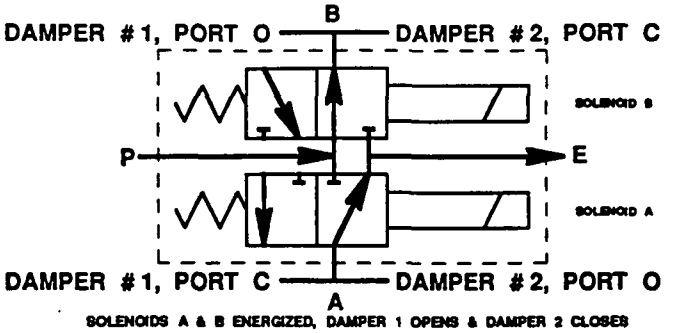

SOLENOIDS A & B ENERGIZED, DAMPER 1 OPENS & DAMPER 2 CLOSES

ENERGIZING SOLENOIDS A & B MOVES BOTH DAMPERS INTO POSITION FOR NORMAL RECIRCULATION OPERATION
(THE SWITCH INSIDE THE CONTROL BOX (SEE DRAWING 6360E100) IS SET IN THE AB POSITION)

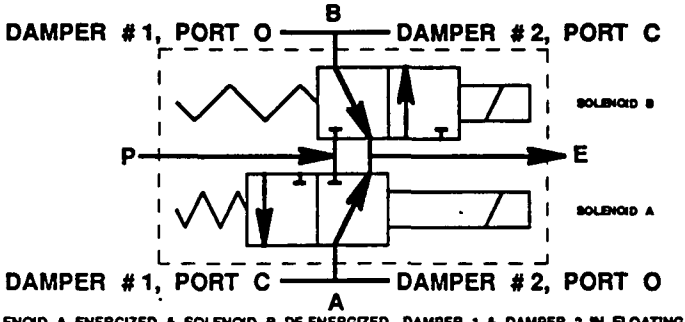

SOLENOID A ENERGIZED & SOLENOID B DE-ENERGIZED, DAMPER 1 & DAMPER 2 IN FLOATING POSITION

ENERGIZING SOLENOID A & DE-ENERGIZING SOLENOID B ALLOWS MANUAL MOVEMENT OF THE DAMPER BLADES
(THE SWITCH INSIDE THE CONTROL BOX (SEE DRAWING 6360E100) IS SET IN THE B POSITION)

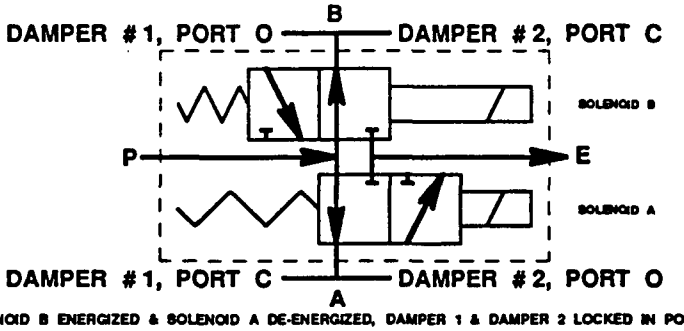

SOLENOID B ENERGIZED & SOLENOID A DE-ENERGIZED, DAMPER 1 & DAMPER 2 LOCKED IN POSITION

ENERGIZING SOLENOID B & DE-ENERGIZING SOLENOID A LOCKS THE DAMPER BLADES AT WHATEVER POSITION THEY ARE IN
(THE SWITCH INSIDE THE CONTROL BOX (SEE DRAWING 6360E100) IS SET IN THE AB POSITION)

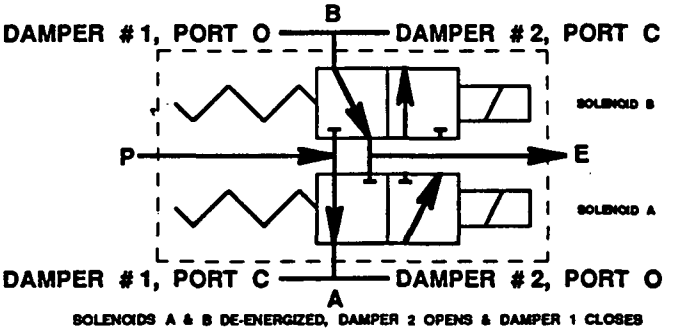

SOLENOIDS A & B DE-ENERGIZED, DAMPER 2 OPENS & DAMPER 1 CLOSES

DE-ENERGIZING SOLENOIDS A & B MOVES BOTH DAMPERS INTO POSITION TO CLOSE THE RECIRCULATION LOOP AND DUMP ALL VAPORS TO THE ATMOSPHERE
(THE SWITCH INSIDE THE CONTROL BOX (SEE DRAWING 6360E100) IS SET IN THE AB POSITION)

ASCO 834911

Position Diagrams of Damper Control 4-Way Solenoid Valve ASV-1 Describing Various Energized and De-energized Positions and the Effect on Dampers No. 1 and No. 2

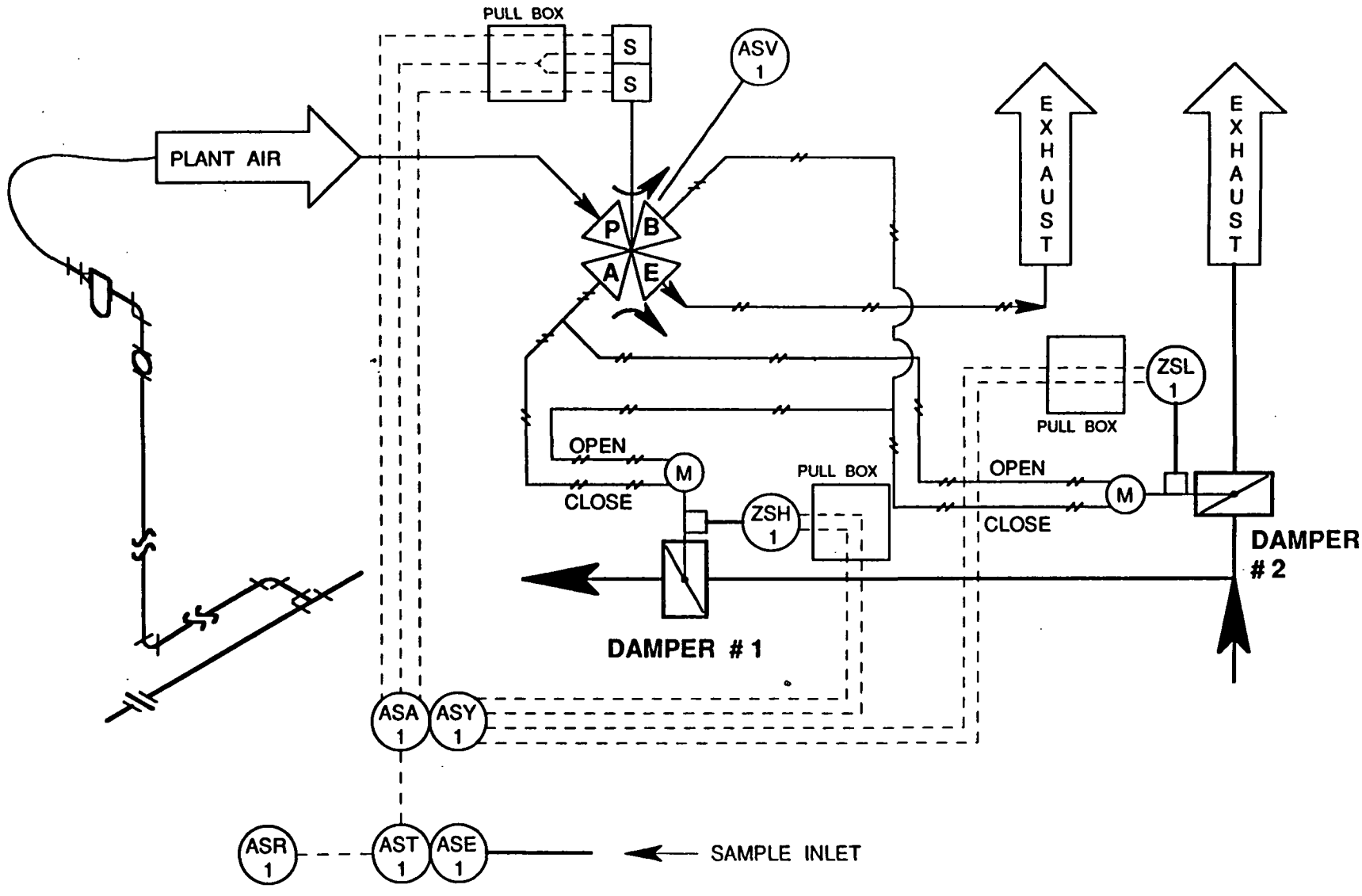

Damper Control Instrumentation Diagram

(The reverse of this page is blank)

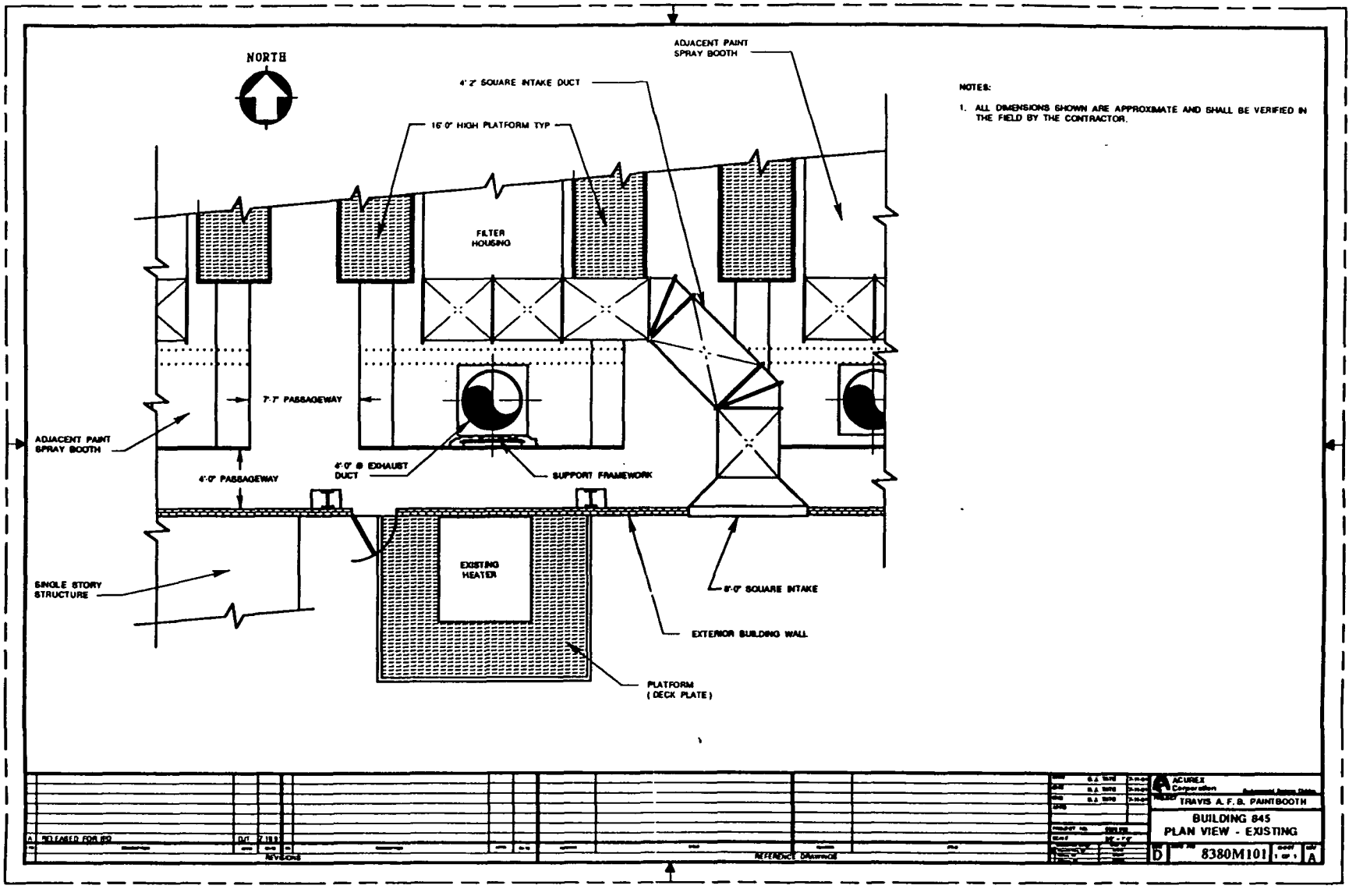

(The reverse of this page is blank)

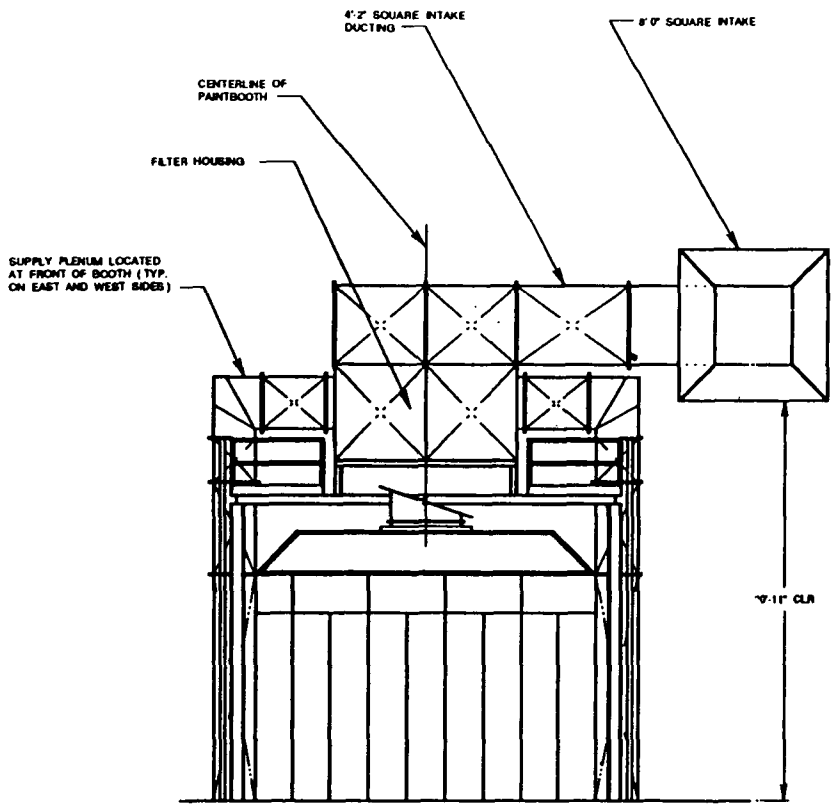

NOTES:

1. ALL DIMENSIONS SHOWN ARE APPROXIMATE AND SHALL BE VERIFIED IN THE FIELD BY THE CONTRACTOR.

REVISIONS

REFERENCE DRAWINGS

ACUREX Corporation

TRAVIS A.F.B. PAINTBOOTH

BUILDING 845
SOUTH ELEVATION - EXIST.

D 8380M102 A

(The reverse of this page is blank)

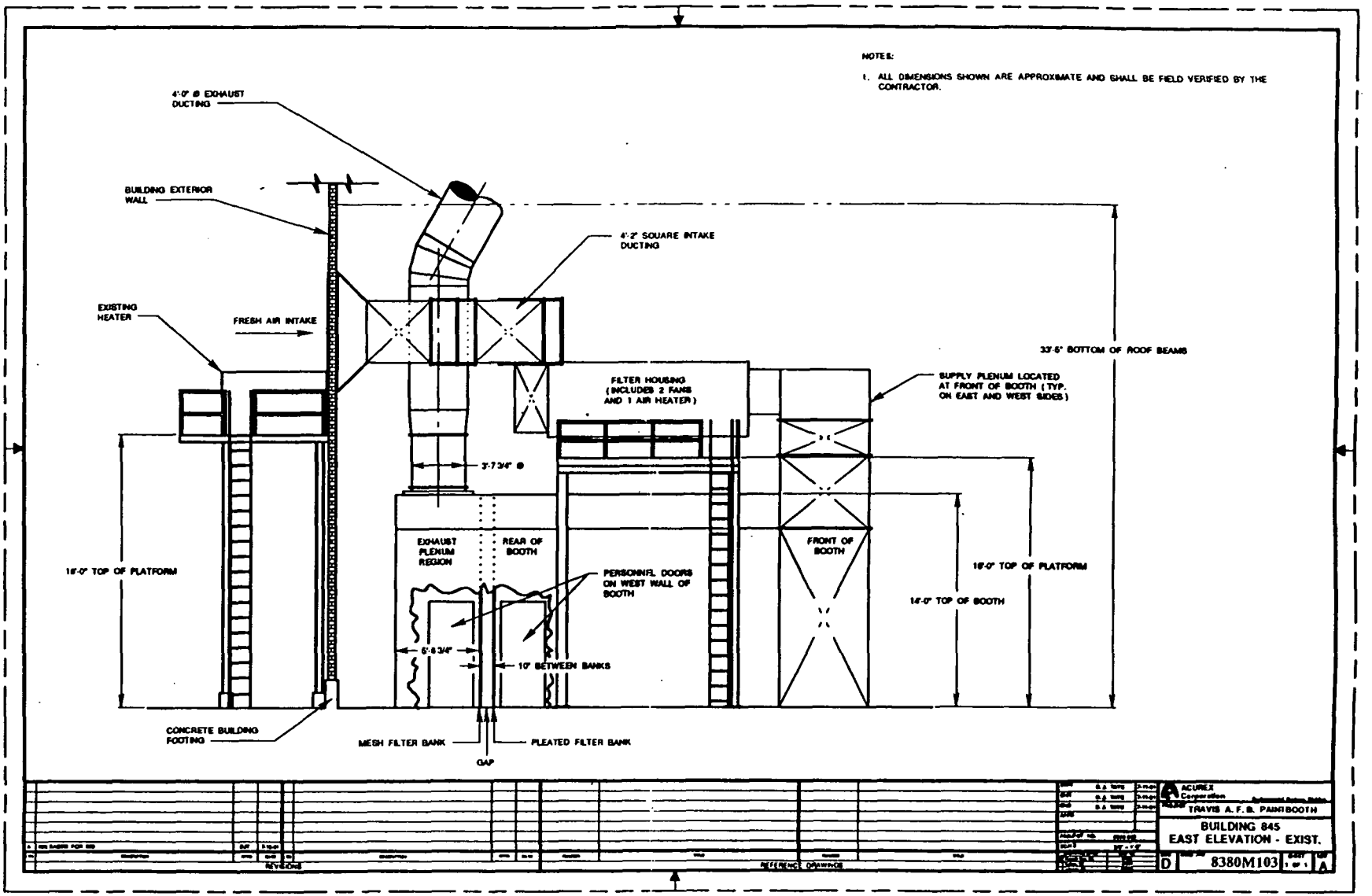

(The reverse of this page is blank)

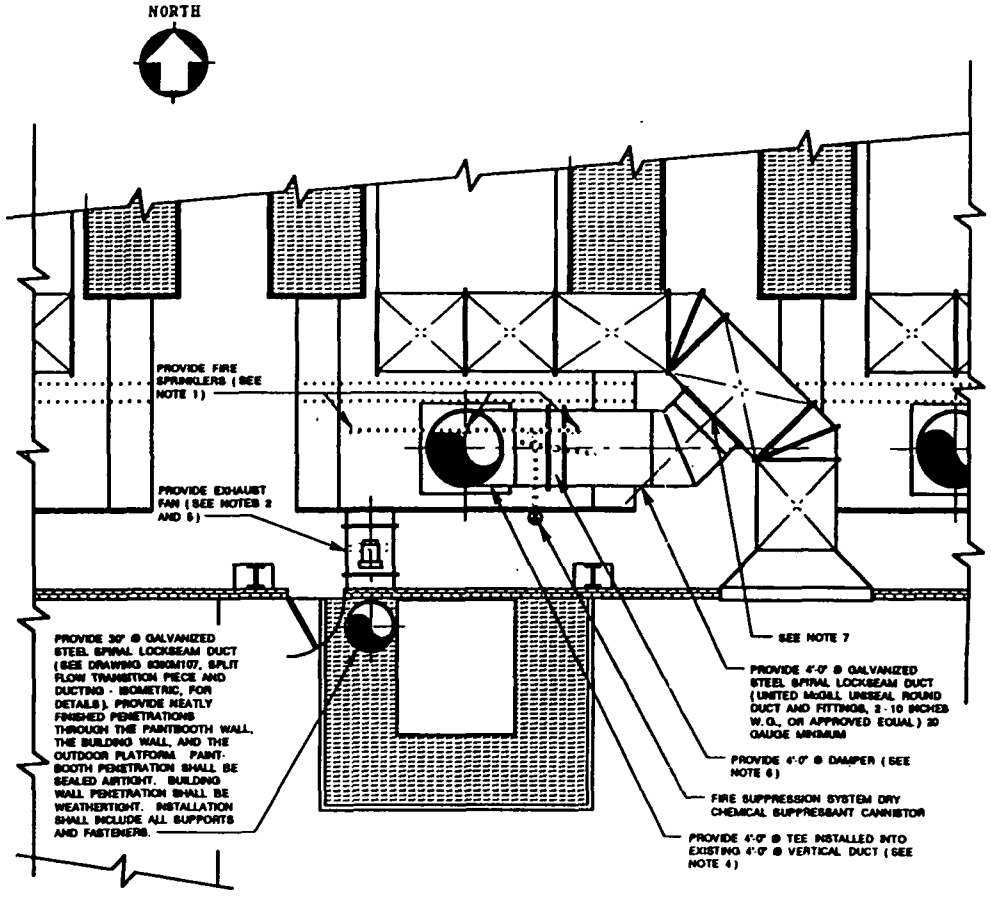

NOTES:

1. PROVIDE A DRY CHEMICAL FIRE SUPPRESSION SYSTEM FOR THE PLENUM CREATED INSIDE THE NEW TRANSITION PIECE. THE SYSTEM SHALL CONSIST OF THREE (3) AUTOMATICALLY ACTUATED SPRAY HEADS CONNECTED THROUGH A MANUALLY RESETABLE SWITCH TO A CANNISTOR OF DRY CHEMICAL SUPPRESSANT. THE MANUALLY RESETTABLE SWITCH SHALL BE CONNECTED TO THE EXISTING ALARM SYSTEM WHICH PRESENTLY IS ACTIVATED IF THERE IS A FIRE IN THE PAINTBOOTH. THE FIRE SUPPRESSION SYSTEM SHALL BE ANSUL SPA 50 INDUSTRIAL FIRE CONTROL SYSTEM (COMPLETE AND INSTALLED TO COMPLY WITH NFPA 96, ALL STATE AND LOCAL LAWS AND REGULATIONS, UL LISTINGS, AND INSURANCE COMPANY REQUIREMENTS) OR APPROVED EQUAL.
2. INTERCONNECT THE NEW 30" Ø EXHAUST FAN WIRING WITH THE START/STOP CONTROLS FOR THE EXISTING SUPPLY AND EXHAUST FANS SO THAT ONE SWITCH LOCALLY ACTIVATES ALL THREE FANS.
3. PROVIDE A NEW MANOMETER, OF THE SAME MANUFACTURER, DESIGN, AND RANGE AS THE EXISTING MANOMETER, ADJACENT TO THE EXISTING MANOMETER, AND CONNECT ITS PORTS BETWEEN THE PAINTBOOTH OPERATING AREA AND THE NEW PLENUM CREATED INSIDE THE NEW TRANSITION PIECE, TO INDICATE WHEN THE FILTER MEDIA NEEDS CHANGING.
4. CUT INTO THE 4'-0" Ø DUCT WHERE SHOWN AND PROVIDE A NEW TEE.
5. PROVIDE A NEW 30" Ø IN-LINE EXHAUST FAN WHERE SHOWN. FAN SHALL BE RATED FOR 25,000 cfm AT 6.0" W.C. DRIVE MOTOR SHALL BE 460 VAC, 3 PHASE, 60 HERTZ, TEFC, AND OF ADEQUATE HORSEPOWER AND CORRECT RPM FOR BOTH THE FAN AND ITS VARIABLE PITCH SHEAVE FAN SHAFT SPEED CONTROLLER. THE VARIABLE PITCH SHEAVE SET SHALL PROVIDE AN RPM TURNDOWN RATIO OF 3:1, AND SHALL BE WOODS No. PRO-300-W OR APPROVED EQUAL.
6. PROVIDE NEW 4'-0" Ø CONTROL DAMPERS (2 REQUIRED) WHERE SHOWN. DAMPERS SHALL BE RUSKIN MODEL No. 7CDR62, OR APPROVED EQUAL. DAMPERS SHALL BE COMPLETE WITH PNEUMATIC MOTOR OPERATORS AND AN ADJUSTABLE POSITION LIMIT SWITCH WHICH CAN BE SET TO OPERATE IN EITHER THE OPENING OR THE CLOSING MODE.
7. CUT INTO EXISTING 4'-2" SQUARE DUCT WHERE SHOWN AND TIE-IN NEW 4'-0" Ø DUCT.

REVISIONS

REFERENCE DRAWINGS

ACURIX Corporation

TRAVIS A.F.B. PAINTBOOTH

BUILDING 845
PLAN VIEW - NEW

D 8380M104 A

(The reverse of this page is blank)

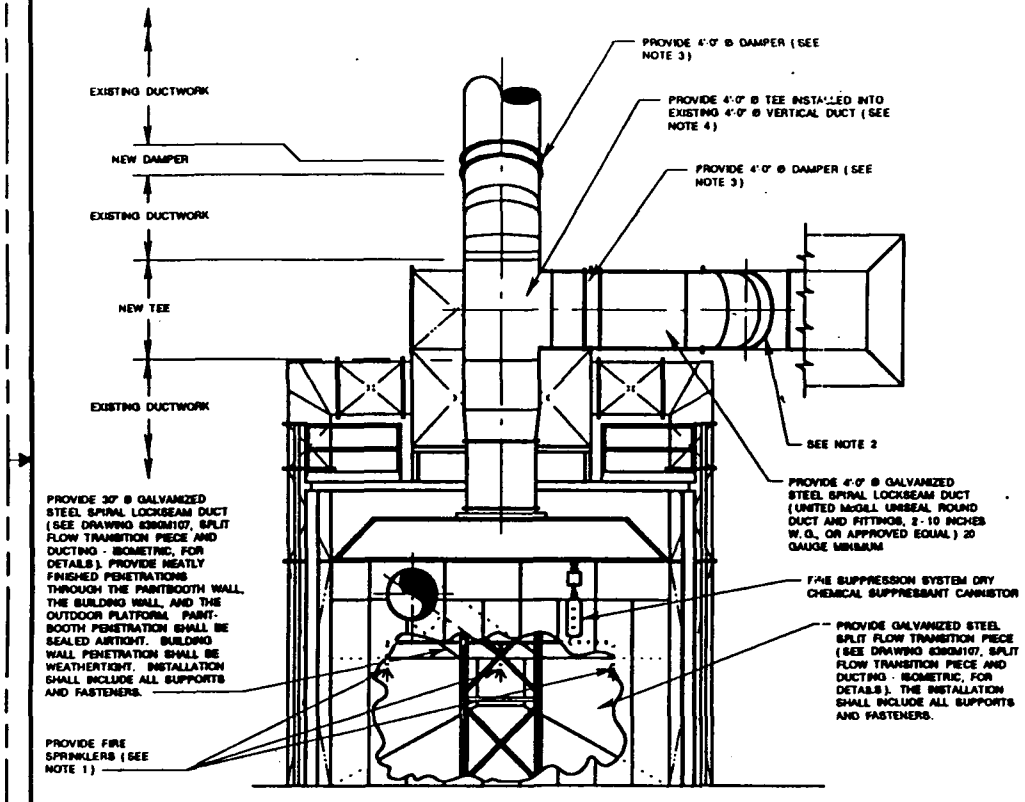

NOTES:

1. PROVIDE A DRY CHEMICAL FIRE SUPPRESSION SYSTEM FOR THE PLENUM CREATED INSIDE THE NEW TRANSITION PIECE. THE SYSTEM SHALL CONSIST OF THREE (3) AUTOMATICALLY ACTUATED SPRAY HEADS CONNECTED THROUGH A MANUALLY RESETABLE SWITCH TO A CANNISTOR OF DRY CHEMICAL SUPPRESSANT. THE MANUALLY RESETTABLE SWITCH SHALL BE CONNECTED TO THE EXISTING ALARM SYSTEM WHICH PRESENTLY IS ACTIVATED IF THERE IS A FIRE IN THE PAINTBOOTH. THE FIRE SUPPRESSION SYSTEM SHALL BE ANSUL SPA 50 INDUSTRIAL FIRE CONTROL SYSTEM (COMPLETE AND INSTALLED TO COMPLY WITH NFPA 96, ALL STATE AND LOCAL LAWS AND REGULATIONS, UL LISTINGS, AND INSURANCE COMPANY REQUIREMENTS) OR APPROVED EQUAL.
2. CUT INTO EXISTING 4'-2" SQUARE DUCT WHERE SHOWN AND TIE IN NEW 4'-0" Ø DUCT.
3. PROVIDE NEW 4'-0" Ø CONTROL DAMPERS (2 REQUIRED) WHERE SHOWN. DAMPERS SHALL BE RUSKIN MODEL No. 7CDR62, OR APPROVED EQUAL. DAMPERS SHALL BE COMPLETE WITH PNEUMATIC MOTOR OPERATORS AND AN ADJUSTABLE POSITION LIMIT SWITCH WHICH CAN BE SET TO OPERATE IN EITHER THE OPENING OR THE CLOSING MODE.
4. CUT INTO THE 4'-0" Ø DUCT WHERE SHOWN AND PROVIDE A NEW TEE.

REVISIONS

REFERENCE DRAWINGS

ACUREX Corporation

TRAVIS A.F.B. PAINTBOOTH

BUILDING 845
SOUTH ELEVATION - NEW

D 8380M105 1 OF 1 A

(The reverse of this page is blank)

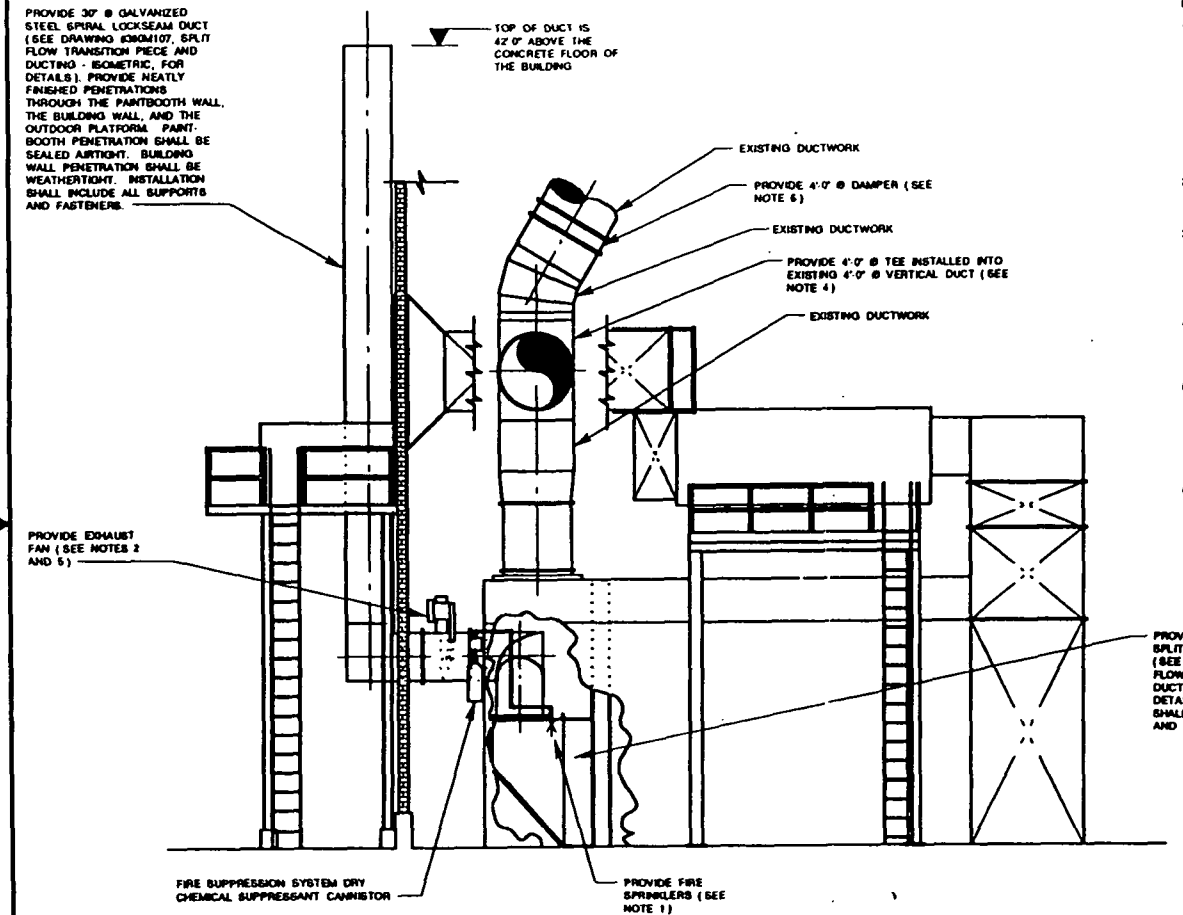

NOTES:

1. PROVIDE A DRY CHEMICAL FIRE SUPPRESSION SYSTEM FOR THE PLENUM CREATED INSIDE THE NEW TRANSITION PIECE. THE SYSTEM SHALL CONSIST OF THREE (3) AUTOMATICALLY ACTUATED SPRAY HEADS CONNECTED THROUGH A MANUALLY RESETABLE SWITCH TO A CANNISTOR OF DRY CHEMICAL SUPPRESSANT. THE MANUALLY RESETTABLE SWITCH SHALL BE CONNECTED TO THE EXISTING ALARM SYSTEM WHICH PRESENTLY IS ACTIVATED IF THERE IS A FIRE IN THE PAINTBOOTH. THE FIRE SUPPRESSION SYSTEM SHALL BE ANSUL SPA 50 INDUSTRIAL FIRE CONTROL SYSTEM (COMPLETE AND INSTALLED TO COMPLY WITH NFPA 96, ALL STATE AND LOCAL LAWS AND REGULATIONS, UL LISTINGS, AND INSURANCE COMPANY REQUIREMENTS) OR APPROVED EQUAL.
2. INTERCONNECT THE NEW 30" Ø EXHAUST FAN WIRING WITH THE START/STOP CONTROLS FOR THE EXISTING SUPPLY AND EXHAUST FANS SO THAT ONE SWITCH LOCALLY ACTIVATES ALL THREE FANS.
3. PROVIDE A NEW MANOMETER, OF THE SAME MANUFACTURER, DESIGN, AND RANGE AS THE EXISTING MANOMETER, ADJACENT TO THE EXISTING MANOMETER ON THE WEST WALL BY THE PERSONNEL DOORS, AND CONNECT ITS PORTS BETWEEN THE PAINTBOOTH OPERATING AREA AND THE NEW PLENUM CREATED INSIDE THE NEW TRANSITION PIECE, TO INDICATE WHEN THE FILTER MEDIA NEEDS CHANGING.
4. CUT INTO THE 4'-0" Ø DUCT WHERE SHOWN AND PROVIDE A NEW TEE. NEW 4'-0" Ø TEE AND DUCTING SHALL BE GALVANIZED STEEL SPIRAL LOCK-SEAM, 20 GAUGE MINIMUM (UNITED McGILL UNISEAL, 2-10 INCHES W.G., OR APPROVED EQUAL).
5. PROVIDE A NEW 30" Ø IN-LINE EXHAUST FAN WHERE SHOWN. FAN SHALL BE RATED FOR 25,000 cfm AT 5.0" W.C. DRIVE MOTOR SHALL BE 460 VAC, 3 PHASE, 60 HERTZ, TEFC, AND OF ADEQUATE HORSEPOWER AND CORRECT RPM FOR BOTH THE FAN AND ITS VARIABLE PITCH SHEAVE FAN SHAFT SPEED CONTROLLER. THE VARIABLE PITCH SHEAVE SET SHALL PROVIDE AN RPM TURNDOWN RATIO OF 3:1, AND SHALL BE WOOD'S No. PRO-300-W OR APPROVED EQUAL.
6. PROVIDE NEW 4'-0" Ø CONTROL DAMPERS (2 REQUIRED) WHERE SHOWN. DAMPERS SHALL BE RUSKIN MODEL No. 7CDR62, OR APPROVED EQUAL. DAMPERS SHALL BE COMPLETE WITH PNEUMATIC MOTOR OPERATORS AND AN ADJUSTABLE POSITION LIMIT SWITCH WHICH CAN BE SET TO OPERATE IN EITHER THE OPENING OR THE CLOSING MODE.
7. ALL DIMENSIONS SHOWN ARE APPROXIMATE AND SHALL BE FIELD VERIFIED BY THE CONTRACTOR.

ACUREX Corporation

TRAVIS A.F.B. PAINTBOOTH

BUILDING 845
EAST ELEVATION - NEW

D 8380M106 A

(The reverse of this page is blank)

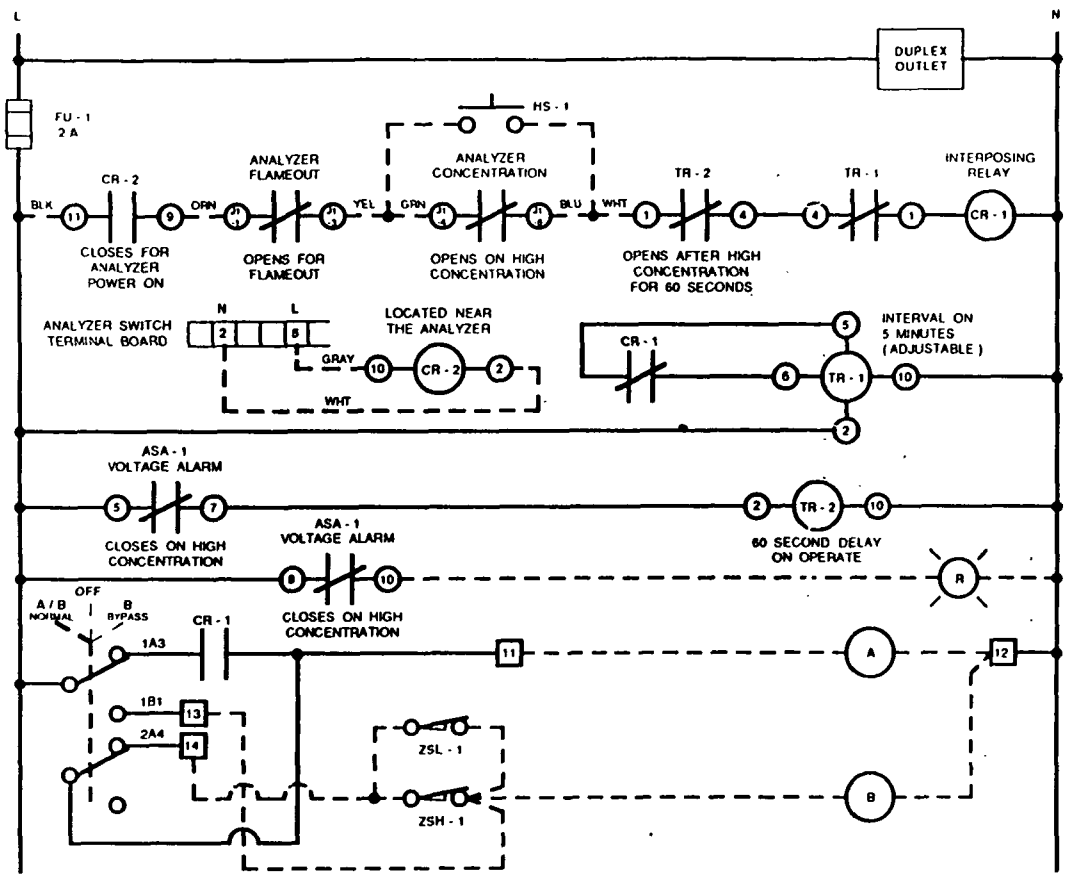

PUSHBUTTON FOR MOMENTARY MANUAL OVERRIDE OF THE INSTRUMENT CONCENTRATION INTERLOCK (FOR SPRAY GUN CLEANING)

RELAY TO CONTROL THE ACTUATORS

ANALYZER POWER SWITCH INTERLOCK

5 MINUTE MINIMUM ACTIVATION OF THE ACTUATORS

60 SECOND HIGH CONCENTRATION TIMER

60 SECOND HIGH CONCENTRATION TIMER "ON" INDICATION

SOLENOIDS "A" & "B" ON VALVE ASV - 1 TO CONTROL THE PNEUMATIC MOTORS ON DAMPERS 1 & 2

"A" & "B" ENERGIZED OPENS DAMPER 1 AND CLOSES DAMPER 2
"A" ENERGIZED & "B" DE-ENERGIZED LOCKS DAMPERS IS POSITION
"A" & "B" DE-ENERGIZED CLOSES DAMPER 1 AND OPENS DAMPER 2

LIMIT SWITCHES ZSL - 1 & ZSH - 1 OPEN WHEN "A" & "B" ARE IN THE "ENERGIZED POSITION" AND DAMPER 1 IS FULLY OPEN AND DAMPER 2 IS FULLY CLOSED

NOTES

1. USE STANDARD 3 PRONG 120 V L N G PLUG FOR POWER CONNECTION
2. CR 1 ALLEN BRADLEY 700 - N400A1
3. TR - 1: GAURDIAN PET 1481 WITH 11 - PIN OCTAL SOCKET
   SWITCH No: 1 2 3 4 5 6 7 8
   X = ON X X X O O X O X
4. TR - 2. POTTER AND BRUMFIELD CWB - 38 - 76000 WITH 11 - PIN OCTAL SOCKET
   SWITCH SETTINGS: OP. SEC. 10 - 100

LTR	DESCRIPTION	APPD	DATE
E	AS BUILT	DJT	6-23-92
D	RELEASED FOR CONSTRUCTION	DJT	9-25-91
C	ADDED FUSE & OUTLET, REVISED NOTES	DJT	9-13-91
B	ADDED SOLENOID B & SWITCHES	DJT	7-26-91
A	RELEASED FOR BID	DJT	7-18-91

REVISIONS

NUMBER	TITLE

REFERENCE DRAWINGS

DWN	D. J. TATE	6-24-91
CHK	B. DOSS	6-24-91
ENG	B. DOSS	6-24-91
APPD	B. DOSS	9-25-91
PROJECT NO.	8380.060	
SCALE	NONE	

ORIGINATING OFFICE / CAGE NO.

ACUREX Corporation — Environmental Systems Division

PROJECT TRAVIS A. F. B. PAINTBOOTH

CONTROL SCHEMATIC

SIZE	DWG NO	SHEET	REV
B	8380E100	1 OF 1	E

(The reverse of this page is blank)

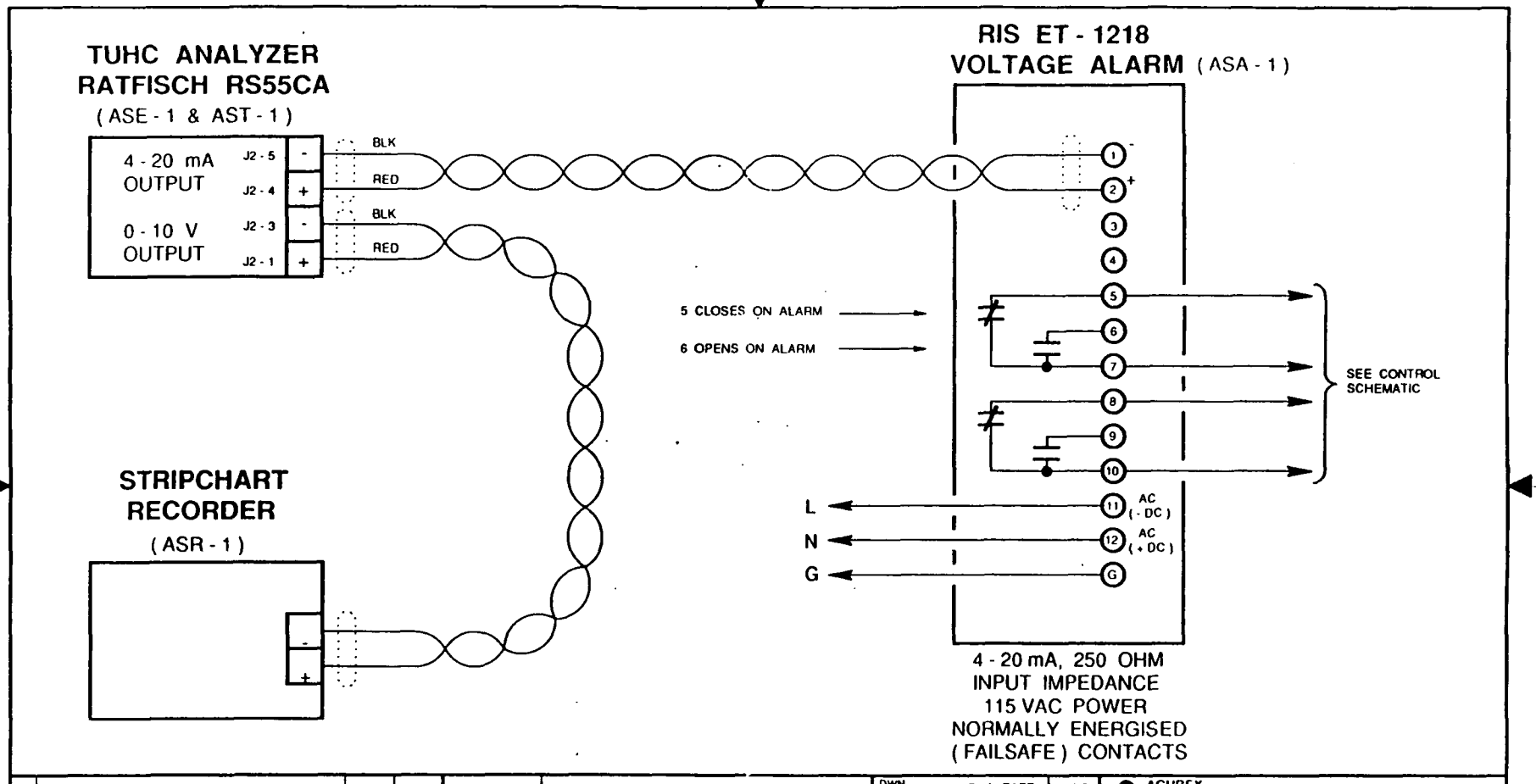

LTR	DESCRIPTION	APPD	DATE
D	AS BUILT	DJT	6-23-92
C	RELEASED FOR CONSTRUCTION	DJT	9-25-91
B	ADDED INSTRUMENT NUMBERS	DJT	7-26-91
A	RELEASED FOR BID	DJT	7-18-91

REVISIONS

NUMBER	TITLE

REFERENCE DRAWINGS

DWN	D. J. TATE	6-24-91
CHK	B. DOSS	6-24-91
ENG	B. DOSS	6-24-91
APPD	B. DOSS	9-25-91
PROJECT NO.	8380.060	
SCALE	NONE	

DESIGNATING OFFICE	CAGE NO.
Mountain View, CA	08C26
Durham, NC	08D91
Jefferson, AR	08D96

ACUREX Corporation
Environmental Systems Division

PROJECT TRAVIS A. F. B. PAINTBOOTH

ANALOG WIRING DIAGRAM

SIZE	DWG. NO	SHEET	REV
B	8380E101	1 OF 1	D

(The reverse of this page is blank)

APPENDIX E

ORGANIC DESORPTION STUDY

NATIONAL EXPRESS LABORATORIES, INC.

NATEX

Mid-Pacific Environmental Laboratory, Inc.
625B Clyde Avenue
Mountain View, CA 94043
(415) 964-0844
FAX (415) 961-7113

June 4, 1991

Ms. Jackie Ayer
Acurex Engineers
555 Clyde Avenue
Mountain View, CA 94043

Ms. Ayer:

Here are the NIOSH 1300 information I promised you. Our final report to you has all been corrected for desorption efficiency. The desorption efficiency study was performed at three levels approximately 100ug, 700ug, and 1400ug per tube. The MDL study was performed using the same amount as level I of the desorption efficiency study. The correction factor used in calculating your NIOSH 1300 is slighly different from this set I am sending to you. The only difference is that I had normalized all recovery greater than 100 percent to 100%. This set I am sending you has was not been normalized for recovery greater than 100 percent. There is only about 0.1 to 0.6 percent difference between the numbers. If you want your reports revise using the new correction factor please let me know.

Sorry this took so long. I hope this did not cause you any inconvenience with your project.

Sincerely,

2/10/93 Elizabeth M. Hyer for
Daniel Mew,
GC Section Manager
Mid-Pacific Environmental Laboratory Inc.
National Express Laboratory

recycled paper

MID-PACIFIC ENVIRONMENTAL LABORATORY
Instrument ID: 3400-2 (DB624 60m column)
Date: 4/25/91

Desorption Efficiency Study - Level 1

	Extract conc.	A1	A2	A3	A4	Average %Rec.
MEK	37.00	104.82	104.57	104.99	104.18	104.64
ETHYLACETATE	35.00	103.64	103.55	103.29	101.56	103.01
2-BUTANOL	38.00	101.60	99.80	101.38	99.92	100.67
N-BUTANOL	33.00	93.65	92.62	93.33	93.04	93.16
METHOXYACETONE	19.00	49.37	49.11	48.08	49.52	49.02
ETHOXYETHANOL	28.00	21.35	21.59	23.88	22.33	22.29
MIBK1	31.00	104.61	103.58	103.50	102.03	103.43
TOLUENE	34.00	103.57	102.63	102.51	101.11	102.46
BUTYLACETATE	26.00	105.15	104.17	104.05	103.08	104.11
ETHYLBENZENE	34.00	105.76	104.81	104.31	103.47	104.59
M & P XYLENE	34.00	98.47	134.76	119.45°	129.22	120.48
PMGE ACETATE	38.00	105.00	104.47	103.52	102.90	103.97
O-XYLENE	35.00	101.18	101.46	101.42	100.65	101.18
2-EOE ACETATE	38.00	106.95	106.23	100.73	105.04	104.74
2-MOE ETHER	38.00	66.66	69.15	71.00	66.08	68.22

Desorption Efficiency Study - Level 2

	Extract conc.	B1	B2	B3	B4 %	Average Rec.
MEK	185.00	101.28	92.99	99.24	100.94	98.61
ETHYLACETATE	175.00	100.77	92.15	98.52	99.73	97.79
2-BUTANOL	190.00	97.92	89.68	95.49	97.36	95.11
N-BUTANOL	165.00	96.04	87.79	94.12	95.48	93.36
METHOXYACETONE	95.00	82.71	74.71	80.82	82.38	80.16
ETHOXYETHANOL	140.00	65.70	58.65	63.85	65.98	63.54
MIBK1	155.00	99.92	91.01	97.57	98.80	96.82
TOLUENE	170.00	99.48	90.54	97.04	98.25	96.33
BUTYLACETATE	130.00	101.05	91.88	98.33	99.45	97.68
ETHYLBENZENE	170.00	100.37	91.55	97.85	99.15	97.23
M & P XYLENE	170.00	108.54	89.66	95.80	97.12	97.78
PMGE ACETATE	190.00	99.14	90.21	96.58	97.81	95.94
O-XYLENE	175.00	96.08	87.66	93.62	94.92	93.07
2-EOE ACETATE	190.00	98.93	90.42	96.43	97.79	95.89
2-MOE ETHER	190.00	76.16	68.80	73.87	75.16	73.50

Desorption Efficiency Study - Level 3

	Extract conc.	C1	C2	C3	C4 %	Average Rec.
MEK	370.00	99.69	100.85	99.40	98.23	99.54
ETHYLACETATE	350.00	98.78	99.88	98.82	97.82	98.83
2-BUTANOL	380.00	96.79	97.87	96.51	95.40	96.64
N-BUTANOL	330.00	95.38	96.61	95.10	94.27	95.34
METHOXYACETONE	190.00	85.83	87.10	85.60	84.97	85.88
ETHOXYETHANOL	280.00	81.10	78.81	77.96	77.52	78.85
MIBK1	310.00	98.84	99.33	97.67	96.82	98.17
TOLUENE	340.00	98.12	98.74	97.00	95.95	97.45
BUTYLACETATE	260.00	99.14	99.86	98.49	97.85	98.83
ETHYLBENZENE	340.00	98.08	98.78	97.52	96.81	97.80
M & P XYLENE	340.00	97.76	97.40	96.17	95.46	96.70
PMGE ACETATE	380.00	97.26	97.89	96.73	95.99	96.97
O-XYLENE	350.00	93.79	94.46	93.37	92.72	93.59
2-EOE ACETATE	380.00	96.97	97.90	96.79	96.07	96.93
2-MOE ETHER	380.00	79.70	79.86	79.62	79.61	79.70

Average Desorption Efficiencies (percent)

	Level 1	Level 2	Level 3	Average
MEK	104.64	98.61	99.54	100.93
ETHYLACETATE	103.01	97.79	98.83	99.88
2-BUTANOL	100.67	95.11	96.64	97.48
N-BUTANOL	93.16	93.36	95.34	93.95
METHOXYACETONE	49.02	80.16	85.88	71.69
ETHOXYETHANOL	22.29	63.54	78.85	54.89
MIBK1	103.43	96.82	98.17	99.47
TOLUENE	102.46	96.33	97.45	98.74
BUTYLACETATE	104.11	97.68	98.83	100.21
ETHYLBENZENE	104.59	97.23	97.80	99.87
M & P XYLENE	120.48	97.78	96.70	104.98
PMGE ACETATE	103.97	95.94	96.97	98.96
O-XYLENE	101.18	93.07	93.59	95.94
2-EOE ACETATE	104.74	95.89	96.93	99.19
2-MOE ETHER	68.22	73.50	79.70	73.81

MID-PACIFIC ENVIRONMENTAL LABORATORY
Instrument ID: 3400-2 (DB624 60m column)
Date: 4/25/91

MDL Study (4/25/91)

	A1	A2	A3	A4	A5	A6	A7	Extract conc.	Mean (ug/mL)	STD (n-1)	Ext. MDL (ug/mL)	RDL (ug/ml)	RDL (ug/tube)
MEK	38.78	38.69	38.85	38.55	38.45	37.75	37.66	37.00	38.39	0.49	1.53	5	20
ETHYLACETATE	36.27	36.24	36.15	35.54	35.31	35.03	35.17	35.00	35.67	0.54	1.68	5	20
2-BUTANOL	38.61	37.92	38.52	37.97	37.42	37.10	37.08	38.00	37.80	0.63	1.97	5	20
N-BUTANOL	30.90	30.56	30.80	30.70	30.17	29.92	29.70	33.00	30.39	0.47	1.46	5	20
METHOXYACETONE	9.38	9.33	9.14	9.41	8.94	9.38	9.17	19.00	9.25	0.17	0.54	10	40
ETHOXYETHANOL	5.98	6.05	6.69	6.25	6.04	7.20	6.50	28.00	6.38	0.44	1.40	10	40
MIBK1	32.43	32.11	32.09	31.63	31.44	30.88	30.95	31.00	31.65	0.60	1.87	5	20
TOLUENE	35.21	34.89	34.85	34.38	34.15	33.54	33.69	34.00	34.39	0.63	1.99	2	8
BUTYLACETATE	27.34	27.08	27.05	26.80	26.49	26.16	26.17	26.00	26.73	0.47	1.47	5	20
ETHYLBENZENE	35.96	35.63	35.47	35.18	34.75	34.20	34.26	34.00	35.06	0.68	2.14	2	8
M & P XYLENE	33.48	45.82	40.61	43.94	40.38	42.09	44.29	34.00	41.52	4.06	12.76*	2	8
PMGE ACETATE	39.90	39.70	39.34	39.10	38.74	38.29	38.33	38.00	39.06	0.63	1.99	5	20
O-XYLENE	35.41	35.51	35.50	35.23	34.62	34.29	34.34	35.00	34.98	0.55	1.73	2	8
2-EOE ACETATE	40.64	40.37	38.28	39.91	37.61	37.28	38.98	38.00	39.01	1.34	4.22	10	40
2-MOE ETHER	25.33	26.28	26.98	25.11	25.48	27.16	26.08	38.00	26.06	0.80	2.52	10	40

* Bad calibration curve for M&P-Xylene.

RDL = Reporting limit based on instrument sensitivity and MDL study.

APPENDIX F

REDUCED DATA FOR THE BASELINE TEST SERIES

Travis AFB Organics

Date: 18 April, 1991

Start Time: 17:17

Stop Time: 18:22

Booth: STP

T= 67.7 P=29.92 "Hg

P= 29.88 T=68 °F

Site Location	Date	Sample Number	Time Sampled (min)	Sample Flowrate (l/min)	Volume Collected (l)	Volume Collected @ STP (l)	2-Butanone (MEK) (ug/tube)	2-Butanone (MEK) (mg/m3)	Ethyl Acetate (ug/tube)	Ethyl Acetate (mg/m3)	2-Butanol (ug/tube)	2-Butanol (mg/m3)	n-Butanol (ug/tube)	n-Butanol (mg/m3)
1	18 April	67	0.00	1.633	0.00	0.00	< 20	N/A	< 20	N/A	< 21	N/A	< 21	N/A
2	18 April	62	66.00	1.315	86.79	86.72	48	0.553484	< 20	0.230618	< 21	0.242149	< 21	0.242149
3	18 April	47	0.00	1.468	0.00	0.00	< 20	N/A	< 20	N/A	< 21	N/A	< 21	N/A
4	18 April	52	76.00	1.371	104.20	104.12	27	0.259326	< 20	0.192093	< 21	0.201698	< 21	0.201698
5	18 April	65	78.00	1.399	109.12	109.04	160	1.467376	< 20	0.183422	< 21	0.192593	< 21	0.192593
6	18 April	44	77.00	1.426	109.80	109.72	120	1.093717	< 20	0.182286	< 21	0.191400	< 21	0.191400
7	18 April	57	77.00	1.371	105.57	105.49	39	0.369717	< 20	0.189598	< 21	0.199078	< 21	0.199078
8	18 April	55	60.00	1.381	82.86	82.80	29	0.350257	< 20	0.241556	< 21	0.253634	< 21	0.253634
9	18 April	49	78.00	1.012	78.94	78.88	680	8.621201	< 20	0.253564	< 21	0.266242	< 21	0.266242
10	18 April	64	0.00	1.018	0.00	0.00	57	N/A	< 20	N/A	< 21	N/A	< 21	N/A
11	18 April	46	76.00	1.313	99.79	99.71	83	0.832403	< 20	0.200579	< 21	0.210608	< 21	0.210608
12	18 April	50	45.00	1.284	57.78	57.74	65	1.125822	< 20	0.346406	< 21	0.363727	< 21	0.363727
13	18 April	42	3.00	1.355	4.07	4.06	140	34.46684	< 20	4.923834	< 21	5.170026	< 21	5.170026
14	18 April	59	77.00	1.35	103.95	103.87	1100	10.59015	< 20	0.192548	< 21	0.202175	< 21	0.202175
15	18 April	45	76.00	0.956	72.66	72.60	160	2.203852	< 20	0.275481	< 21	0.289255	< 21	0.289255
16	18 April	51	75.00	1.369	102.68	102.60	170	1.656983	< 20	0.194939	< 21	0.204686	< 21	0.204686
17	18 April	68	77.00	1.331	102.49	102.41	1500	14.64726	< 20	0.195296	< 21	0.205061	< 21	0.205061
18	18 April	41	77.00	1.317	101.41	101.33	1800	17.76356	< 20	0.197372	< 21	0.207241	< 21	0.207241
19	18 April	58	76.00	1.098	83.45	83.38	350	4.197455	< 20	0.239854	< 21	0.251847	< 21	0.251847
20	18 April	56	75.00	1.322	99.15	99.07	< 20	0.201869	< 20	0.201869	< 21	0.211963	< 21	0.211963
21	18 April	53	78.00	1.309	102.10	102.02	1100	10.78182	< 20	0.196033	< 21	0.205834	< 21	0.205834
22	18 April	60	77.00	1.319	101.56	101.48	540	5.320987	< 20	0.197073	< 21	0.206927	< 21	0.206927
23	18 April	69	76.00	1.318	100.17	100.09	140	1.398727	< 20	0.199818	< 21	0.209809	< 21	0.209809
24	18 April	48	75.00	1.276	95.70	95.63	120	1.254883	< 20	0.209147	< 21	0.219604	< 21	0.219604
(Duplicate) 10	18 April	61	77.00	0.927	71.38	71.32	200	2.804100	< 20	0.280410	< 21	0.294430	< 21	0.294430
(Duplicate) 15	18 April	63	77.00	0.905	69.69	69.63	160	2.297813	< 20	0.287226	< 21	0.301587	< 21	0.301587
Painter UH	18 April	66	81.00	1.298	105.14	105.06	30	0.285558	< 20	0.190372	< 21	0.199891	< 21	0.199891
Painter OH	18 April	54	81.00	1.285	104.09	104.00	5300	50.95909	< 20	0.192298	< 21	0.201913	< 21	0.201913
Blank	18 April	71	0.00	0	0.00	0.00	< 20	N/A	< 20	N/A	< 21	N/A	< 21	N/A

Painter UH = Underneath painter respirator hood.

Painter OH = Outside painter respirator hood.

Travis AFB
Date: 18 April, 1991
Start Time: 17:17
Stop Time: 18:22

Site Location	Date	Sample Number	Methoxyacetone (ug/tube)	Methoxyacetone (mg/m3)	Ethoxyethanol (ug/tube)	Ethoxyethanol (mg/m3)	4-Methyl-2-Pentanone(MIBK) (ug/tube)	4-Methyl-2-Pentanone(MIBK) (mg/m3)	Toluene (ug/tube)	Toluene (mg/m3)	Butyl Acetate (ug/tube)	Butyl Acetate (mg/m3)
1	18 April	67	< 56	N/A	< 73	N/A	< 20	N/A	< 8.2	N/A	< 20	N/A
2	18 April	62	< 56	0.645732	< 73	0.841757	< 20	0.230618	< 8.2	0.094553	< 20	0.230618
3	18 April	47	< 56	N/A	< 73	N/A	< 20	N/A	< 8.2	N/A	< 20	N/A
4	18 April	52	< 56	0.537862	< 73	0.701141	75	0.720351	10	0.096046	< 20	0.192093
5	18 April	65	< 56	0.513581	< 73	0.669490	< 20	0.183422	< 8.2	0.075203	< 20	0.183422
6	18 April	44	< 56	0.510401	< 73	0.665344	< 20	0.182286	< 8.2	0.074737	< 20	0.182286
7	18 April	57	< 56	0.530876	< 73	0.692036	130	1.232392	17	0.161159	28	0.265438
8	18 April	55	< 56	0.676358	< 73	0.881681	110	1.328561	19	0.229478	31	0.374412
9	18 April	49	< 56	0.709981	< 73	0.925511	84	1.064971	< 8.2	0.103961	< 20	0.253564
10	18 April	64	< 56	N/A	< 73	N/A	< 20	N/A	< 8.2	N/A	< 20	N/A
11	18 April	46	< 56	0.561621	400	4.011582	50	0.501447	100	1.002895	< 20	0.200579
12	18 April	50	< 56	0.969939	< 73	1.264385	300	5.196102	38	0.658173	80	1.385627
13	18 April	42	< 56	13.78673	< 73	17.97199	120	29.54300	14	3.446684	22	5.416218
14	18 April	59	< 56	0.539135	< 73	0.702801	350	3.369593	35	0.336959	62	0.596899
15	18 April	45	< 56	0.771348	< 73	1.005507	890	12.25892	100	1.377407	230	3.168037
16	18 April	51	< 56	0.545829	< 73	0.711528	980	9.552023	120	1.169635	260	2.534210
17	18 April	68	< 56	0.546831	< 73	0.712833	550	5.370663	58	0.566360	110	1.074132
18	18 April	41	< 56	0.552644	< 73	0.720411	1000	9.868644	110	1.085550	230	2.269788
19	18 April	58	< 56	0.671592	< 73	0.875469	1600	19.18836	180	2.158691	400	4.797092
20	18 April	56	< 56	0.565235	< 73	0.736824	< 20	0.201869	< 8.2	0.082766	< 20	0.201869
21	18 April	53	< 56	0.548893	< 73	0.715521	170	1.666282	16	0.156826	26	0.254843
22	18 April	60	< 56	0.551806	< 73	0.719318	150	1.478052	16	0.157658	31	0.305464
23	18 April	69	< 56	0.559490	< 73	0.729336	760	7.593090	91	0.909172	200	1.998181
24	18 April	48	< 56	0.585612	< 73	0.763387	620	6.483563	74	0.773844	160	1.673177
(Duplicate) 10	18 April	61	< 56	0.785148	< 73	1.023496	52	0.729066	< 8.2	0.114968	< 20	0.280410
(Duplicate) 15	18 April	63	< 56	0.804234	< 73	1.048377	850	12.20713	100	1.436133	230	3.303106
Painter UH	18 April	66	< 56	0.533043	< 73	0.694859	< 20	0.190372	< 8.2	0.078052	< 20	0.190372
Painter OH	18 April	54	< 56	0.538435	< 73	0.701889	1200	11.53790	130	1.249940	270	2.596029
Blank	18 April	71	< 56	N/A	< 73	N/A	< 20	N/A	< 8.2	N/A	< 20	N/A

Painter UH = Underneath painter respirator hood.
Painter OH = Outside painter respirator hood.

Travis AFB
Date: 18 April, 1991
Start Time: 17:17
Stop Time: 18:22

Site Location	Date	Sample Number	Ethylbenzene (ug/tube)	Ethylbenzene (mg/m3)	Total Xylenes (ug/tube)	Total Xylenes (mg/m3)	PMGE Acetate (ug/tube)	PMGE Acetate (mg/m3)	2-Ethoxyethyl Acetate (ug/tube)	2-Ethoxyethyl Acetate (mg/m3)	2-Methoxyethyl Ether (ug/tube)	2-Methoxyethyl Ether (mg/m3)	
1	18 April	67	< 8.2	N/A	< 8.2	N/A	< 20	N/A	< 41	N/A	< 54	N/A	N/A
2	18 April	62	< 8.2	0.094553	< 8.2	0.094553	< 20	0.230618	< 41	0.472768	< 54	0.622670	0.553484
3	18 April	47	< 8.2	N/A	< 8.2	N/A	< 20	N/A	< 41	N/A	< 54	N/A	N/A
4	18 April	52	< 8.2	0.078758	< 8.2	0.078758	< 20	0.192093	< 41	0.393791	< 54	0.518652	1.075724
5	18 April	65	< 8.2	0.075203	< 8.2	0.075203	< 20	0.183422	< 41	0.376015	< 54	0.495239	1.467376
6	18 April	44	< 8.2	0.074737	< 8.2	0.074737	< 20	0.182286	< 41	0.373686	< 54	0.492172	1.093717
7	18 April	57	< 8.2	0.077735	< 8.2	0.077735	< 20	0.189598	< 41	0.388677	< 54	0.511917	2.028708
8	18 April	55	< 8.2	0.099038	< 8.2	0.099038	< 20	0.241556	< 41	0.495191	< 54	0.652203	2.282710
9	18 April	49	< 8.2	0.103961	< 8.2	0.103961	< 20	0.253564	< 41	0.519807	< 54	0.684624	9.686173
10	18 April	64	< 8.2	N/A	< 8.2	N/A	< 20	N/A	< 41	N/A	< 54	N/A	N/A
11	18 April	46	< 8.2	0.082237	< 8.2	0.082237	< 20	0.200579	< 41	0.411187	< 54	0.541563	2.537325
12	18 April	50	< 8.2	0.142026	< 8.2	0.142026	< 20	0.346406	< 41	0.710134	< 54	0.935298	8.365725
13	18 April	42	< 8.2	2.018772	< 8.2	2.018772	< 20	4.923834	< 41	10.09386	< 54	13.29435	72.87275
14	18 April	59	< 8.2	0.078944	< 8.2	0.078944	< 20	0.192548	< 41	0.394723	< 54	0.519880	14.89360
15	18 April	45	< 8.2	0.112947	< 8.2	0.112947	< 20	0.275481	< 41	0.564737	< 54	0.743800	19.00822
16	18 April	51	< 8.2	0.079925	9.6	0.093570	< 20	0.194939	< 41	0.399625	< 54	0.526335	15.00642
17	18 April	68	< 8.2	0.080071	< 8.2	0.080071	< 20	0.195296	< 41	0.400358	< 54	0.527301	21.65842
18	18 April	41	< 8.2	0.080922	< 8.2	0.080922	< 20	0.197372	< 41	0.404614	< 54	0.532906	30.98754
19	18 April	58	< 8.2	0.098340	< 8.2	0.098340	< 20	0.239854	< 41	0.491701	< 54	0.647607	30.34160
20	18 April	56	< 8.2	0.082766	< 8.2	0.082766	< 20	0.201869	82	0.827666	< 54	0.545048	0.827666
21	18 April	53	< 8.2	0.080373	< 8.2	0.080373	< 20	0.196033	< 41	0.401868	< 54	0.529289	12.85978
22	18 April	60	< 8.2	0.080800	< 8.2	0.080800	< 20	0.197073	< 41	0.404000	< 54	0.532098	7.262162
23	18 April	69	< 8.2	0.081925	< 8.2	0.081925	< 20	0.199818	< 41	0.409627	< 54	0.539509	11.89917
24	18 April	48	< 8.2	0.085750	< 8.2	0.085750	< 20	0.209147	< 41	0.428751	< 54	0.564697	10.18546
(Duplicate) 10	18 April	61	< 8.2	0.114968	< 8.2	0.114968	< 20	0.280410	< 41	0.574840	< 54	0.757107	3.533166
(Duplicate) 15	18 April	63	< 8.2	0.117762	< 8.2	0.117762	< 20	0.287226	< 41	0.588814	< 54	0.775511	19.24418
Painter UH	18 April	66	< 8.2	0.078052	< 8.2	0.078052	< 20	0.190372	< 41	0.390263	< 54	0.514005	0.285558
Painter OH	18 April	54	< 8.2	0.078842	9.6	0.092303	< 20	0.192298	< 41	0.394211	< 54	0.519205	66.34297
Blank	18 April	71	< 8.2	N/A	< 8.2	N/A	< 20	N/A	< 41	N/A	< 54	N/A	N/A

Painter UH = Underneath painter respirator hood.
Painter OH = Outside painter respirator hood.

Travis AFB NIOSH
Date: 18 April, 1991
Start Time: 10:02
Stop Time: 11:02

Site Location	Date	Sample Number	Ethoxyethanol (ug/tube)	Ethoxyethanol (mg/m3)	4-Methyl-2-Pentanone(MIBK) (ug/tube)	4-Methyl-2-Pentanone(MIBK) (mg/m3)	Toluene (ug/tube)	Toluene (mg/m3)	Butyl Acetate (ug/tube)	Butyl Acetate (mg/m3)	Ethylbenzene (ug/tube)	Ethylbenzene (mg/m3)
1	18 April	24	< 73 <	0.780	< 20 <	0.214	< 8.2 <	0.088	< 20 <	0.214	< 8.2 <	0.088
2	18 April	20	< 73 <	0.907	< 20 <	0.248	< 8.2 <	0.102	< 20 <	0.248	< 8.2 <	0.102
3	18 April	13	< 73 <	1.937	< 20 <	0.531	< 8.2 <	0.218	< 20 <	0.531	< 8.2 <	0.218
4	18 April	31	< 73 <	0.753	160	1.651	23	0.237	43	0.444	< 8.2 <	0.085
5	18 April	16	< 73 <	0.709	< 20 <	0.194	< 8.2 <	0.080	< 20 <	0.194	< 8.2 <	0.080
6	18 April	25	< 73 <	0.713	24	0.234	< 8.2 <	0.080	< 20 <	0.195	< 8.2 <	0.080
7	18 April	28	< 73 <	0.758	150	1.557	23	0.239	39	0.405	< 8.2 <	0.085
8	18 April	33	< 73 <	0.767	250	2.626	38	0.399	67	0.704	< 8.2 <	0.086
9	18 April	23	< 73 <	0.899	47	0.579	< 8.2 <	0.101	< 20 <	0.246	< 8.2 <	0.101
10	18 April	19	< 73 <	1.022	100	1.400	16	0.224	24	0.336	< 8.2 <	0.115
11	18 April	32	< 73 <	0.773	510	5.400	73	0.773	140	1.482	< 8.2 <	0.087
12	18 April	18	< 73 <	0.806	440	4.859	65	0.718	120	1.325	< 8.2 <	0.091
13	18 April	26	< 73 <	0.745	320	3.264	33	0.337	46	0.469	< 8.2 <	0.084
14	18 April	21	< 73 <	0.756	450	4.662	65	0.673	130	1.347	< 8.2 <	0.085
15	18 April	38	< 73 <	1.097	1100	16.527	150	2.254	320	4.808	< 8.2 <	0.123
16	18 April	27	< 73 <	0.771	1400	14.793	190	2.008	400	4.227	< 8.2 <	0.087
17	18 April	36	< 73 <	0.748	300	3.074	37	0.379	60	0.615	< 8.2 <	0.084
18	18 April	29	< 73 <	0.765	930	9.740	110	1.152	210	2.199	< 8.2 <	0.086
19	18 April	35	< 73 <	0.889	** 2300 **	28.025	310	3.777	660	8.042	< 8.2 <	0.100
20	18 April	14	< 73 <	0.796	2000	21.808	280	3.053	570	6.215	< 8.2 <	0.089
21	18 April	39	< 73 <	0.751	170	1.748	19	0.195	25	0.257	< 8.2 <	0.084
22	18 April	22	< 73 <	0.757	300	3.111	44	0.456	80	0.830	< 8.2 <	0.085
23	18 April	37	< 73 <	0.780	790	8.440	110	1.175	220	2.350	< 8.2 <	0.088
24	18 April	17	< 73 <	0.797	710	7.755	100	1.092	200	2.185	< 8.2 <	0.090
(Duplicate) 10	18 April	12	< 73 <	1.067	120	1.753	18	0.263	33	0.482	< 8.2 <	0.120
(Duplicate) 15	18 April	15	< 73 <	1.149	1100	17.319	150	2.362	310	4.881	< 8.2 <	0.129
Painter UH	18 April	11	< 73 <	1.265	** 1700 **	29.450	230	3.984	440	7.622	< 8.2 <	0.142
Painter OH	18 April	34	< 73 <	0.881	< 20 <	0.241	< 8.2 <	0.099	< 20 <	0.241	< 8.2 <	0.099
Blank	18 April	30	< 73	N/A	< 20	N/A	< 8.2	N/A	< 20	N/A	< 8.2	N/A

Painter UH = Underneath painter respirator hood.
Painter OH = Outside painter respirator hood.

Travis AFB NIOSH 1300, Organics

Date: 18 April, 1991 Booth: STP

Start Time: 10:02 T=61.3 P=29.92 "Hg

Stop Time: 11:02 P=29.88 T=68 °F

Site Location	Date	Sample Number	Time Sampled (min)	Sample Flowrate (l/min)	Volume Collected @ STP (l)	2-Butanone (MEK) (ug/tube)	2-Butanone (MEK) (mg/m3)	Ethyl Acetate (ug/tube)	Ethyl Acetate (mg/m3)	2-Butanol (ug/tube)	2-Butanol (mg/m3)	n-Butanol (ug/tube)	n-Butanol (mg/m3)	Methoxyacetone (ug/tube)	Methoxyacetone (mg/m3)
1	18 April	24	60.0	1.543	93.6 x	< 20 <	0.214	< 20 <	0.214	< 21 <	0.224	< 21 <	0.224	< 56 <	0.598
2	18 April	20	61.0	1.305	80.5 x	< 20 <	0.248	< 20 <	0.248	< 21 <	0.261	< 21 <	0.261	< 56 <	0.695
3	18 April	13	26.0	1.433	37.7 x	< 20 <	0.531	< 20 <	0.531	< 21 <	0.557	< 21 <	0.557	< 56 <	1.486
4	18 April	31	70.0	1.369	96.9 x	38	0.392	< 20 <	0.206	< 21 <	0.217	< 21 <	0.217	< 56 <	0.578
5	18 April	16	73.0	1.394	102.9 x	65	0.631	< 20 <	0.194	< 21 <	0.204	< 21 <	0.204	< 56 <	0.544
6	18 April	25	71.0	1.426	102.4 x	28	0.273	< 20 <	0.195	< 21 <	0.205	< 21 <	0.205	< 56 <	0.547
7	18 April	28	70.0	1.361	96.4 x	44	0.457	< 20 <	0.208	< 21 <	0.218	< 21 <	0.218	< 56 <	0.581
8	18 April	33	69.0	1.364	95.2 x	61	0.641	< 20 <	0.210	< 21 <	0.221	< 21 <	0.221	< 56 <	0.588
9	18 April	23	70.0	1.147	81.2 x	350	4.310	< 20 <	0.246	< 21 <	0.259	< 21 <	0.259	< 56 <	0.690
10	18 April	19	72.0	0.981	71.4 x	70	0.980	< 20 <	0.280	< 21 <	0.294	< 21 <	0.294	< 56 <	0.784
11	18 April	32	71.0	1.315	94.4 x	110	1.165	< 20 <	0.212	< 21 <	0.222	< 21 <	0.222	< 56 <	0.593
12	18 April	18	70.0	1.279	90.6 x	82	0.905	< 20 <	0.221	< 21 <	0.232	< 21 <	0.232	< 56 <	0.618
13	18 April	26	72.0	1.346	98.0 x**	1900 **	19.382	< 20 <	0.204	< 21 <	0.214	< 21 <	0.214	< 56 <	0.571
14	18 April	21	71.0	1.344	96.5 x	530	5.491	< 20 <	0.207	< 21 <	0.218	< 21 <	0.218	< 56 <	0.580
15	18 April	38	70.0	0.94	66.6 x	210	3.155	< 20 <	0.300	< 21 <	0.316	< 21 <	0.316	< 56 <	0.841
16	18 April	27	69.0	1.356	94.6 x	270	2.853	< 20 <	0.211	< 21 <	0.222	< 21 <	0.222	< 56 <	0.592
17	18 April	36	72.0	1.34	97.6 x	2100	21.519	< 20 <	0.205	< 21 <	0.215	< 21 <	0.215	< 56 <	0.574
18	18 April	29	72.0	1.311	95.5 x	1400	14.663	< 20 <	0.209	< 21 <	0.220	< 21 <	0.220	< 56 <	0.587
19	18 April	35	67.0	1.211	82.1 x	540	6.580	< 20 <	0.244	< 21 <	0.256	< 21 <	0.256	< 56 <	0.682
20	18 April	14	69.0	1.314	91.7 x	430	4.689	< 20 <	0.218	< 21 <	0.229	< 21 <	0.229	< 56 <	0.611
21	18 April	39	73.0	1.317	97.2 x	920	9.460	< 20 <	0.206	< 21 <	0.216	< 21 <	0.216	< 56 <	0.576
22	18 April	22	72.0	1.324	96.4 x	190	1.970	< 20 <	0.207	< 21 <	0.218	< 21 <	0.218	< 56 <	0.581
23	18 April	37	70.0	1.322	93.6 x	180	1.923	< 20 <	0.214	< 21 <	0.224	< 21 <	0.224	< 56 <	0.598
24	18 April	17	70.0	1.293	91.6 x	150	1.638	< 20 <	0.218	< 21 <	0.229	< 21 <	0.229	< 56 <	0.612
(Duplicate) 10	18 April	12	71.0	0.953	68.4 x	140	2.046	110	1.607	< 21 <	0.307	< 21 <	0.307	< 56 <	0.818
(Duplicate) 15	18 April	15	69.0	0.91	63.5 x	200	3.149	< 20 <	0.315	< 21 <	0.331	< 21 <	0.331	< 56 <	0.882
Painter UH	18 April	11	44.0	1.297	57.7 x	1000	17.324	< 20 <	0.346	< 21 <	0.364	< 21 <	0.364	< 56 <	0.970
Painter OH	18 April	34	63.0	1.3	82.8 x	< 20 <	0.241	< 20 <	0.241	< 21 <	0.253	< 21 <	0.253	< 56 <	0.676
Blank	18 April	30	0.0	0	0.0 x	< 20	N/A	< 20	N/A	< 21	N/A	< 21	N/A	< 56	N/A

Painter UH = Underneath painter respirator hood.
Painter OH = Outside painter respirator hood.

Travis AFB NIOSH
Date: 18 April, 1991
Start Time: 10:02
Stop Time: 11:02

Site Location	Date	Sample Number	Total Xylenes (ug/tube)	Total Xylenes (mg/m3)	PMGE Acetate (ug/tube)	PMGE Acetate (mg/m3)	2-Ethoxyethyl Acetate (ug/tube)	2-Ethoxyethyl Acetate (mg/m3)	2-Methoxyethyl Ether (ug/tube)	2-Methoxyethyl Ether (mg/m3)	Totals (mg/m3)
1	18 April	24	< 8.2	< 0.088	< 20	< 0.214	< 41	< 0.438	< 54	< 0.577	< 4.171059
2	18 April	20	< 8.2	< 0.102	< 20	< 0.248	< 41	< 0.509	< 54	< 0.671	< 4.850909
3	18 April	13	< 8.2	< 0.218	< 20	< 0.531	< 41	< 1.088	< 54	< 1.433	< 10.36439
4	18 April	31	< 8.2	< 0.085	< 20	< 0.206	< 41	< 0.423	< 54	< 0.557	2.723539
5	18 April	16	< 8.2	< 0.080	< 20	< 0.194	< 41	< 0.398	< 54	< 0.525	0.631479
6	18 April	25	< 8.2	< 0.080	< 20	< 0.195	< 41	< 0.400	< 54	< 0.527	0.507758
7	18 April	28	< 8.2	< 0.085	< 20	< 0.208	< 41	< 0.425	< 54	< 0.560	2.656532
8	18 April	33	< 8.2	< 0.086	< 20	< 0.210	< 41	< 0.431	< 54	< 0.567	4.369796
9	18 April	23	< 8.2	< 0.101	< 20	< 0.246	< 41	< 0.505	< 54	< 0.665	5.134591
10	18 April	19	< 8.2	< 0.115	< 20	< 0.280	< 41	< 0.574	< 54	< 0.756	2.939335
11	18 April	32	< 8.2	< 0.087	< 20	< 0.212	< 41	< 0.434	< 54	< 0.572	8.820479
12	18 April	18	< 8.2	< 0.091	< 20	< 0.221	< 41	< 0.453	< 54	< 0.596	7.806963
13	18 April	26	< 8.2	< 0.084	< 20	< 0.204	< 41	< 0.418	< 54	< 0.551	23.45269
14	18 April	21	< 8.2	< 0.085	< 20	< 0.207	< 41	< 0.425	< 54	< 0.559	12.17339
15	18 April	38	16	0.240	< 20	< 0.300	< 41	< 0.616	< 54	< 0.811	26.98433
16	18 April	27	20	0.211	< 20	< 0.211	< 41	< 0.433	< 54	< 0.571	24.09114
17	18 April	36	< 8.2	< 0.084	< 20	< 0.205	< 41	< 0.420	< 54	< 0.553	25.58659
18	18 April	29	9.9	0.104	< 20	< 0.209	< 41	< 0.429	< 54	< 0.566	27.85873
19	18 April	35	33	0.402	< 20	< 0.244	< 41	< 0.500	< 54	< 0.658	46.82553
20	18 April	14	29	0.316	< 20	< 0.218	< 41	< 0.447	< 54	< 0.589	36.08141
21	18 April	39	< 8.2	< 0.084	< 20	< 0.206	< 41	< 0.422	< 54	< 0.555	11.66099
22	18 April	22	< 8.2	< 0.085	< 20	< 0.207	< 41	< 0.425	< 54	< 0.560	6.367650
23	18 April	37	10	0.107	< 20	< 0.214	< 41	< 0.438	< 54	< 0.577	13.99500
24	18 April	17	< 8.2	< 0.090	< 20	< 0.218	< 41	< 0.448	< 54	< 0.590	12.67047
(Duplicate) 10	18 April	12	< 8.2	< 0.120	< 20	< 0.292	< 41	< 0.599	< 54	< 0.789	6.151232
(Duplicate) 15	18 April	15	16	0.252	< 20	< 0.315	< 41	< 0.646	< 54	< 0.850	27.96300
Painter UH	18 April	11	15	0.260	< 20	< 0.346	< 41	< 0.710	< 54	< 0.935	58.64045
Painter OH	18 April	34	< 8.2	< 0.099	< 20	< 0.241	< 41	< 0.495	< 54	< 0.652	< 0.823250
Blank	18 April	30	< 8.2	N/A	< 20	N/A	< 41	N/A	< 54	N/A	N/A

Painter UH = Underneath painter respirator hood.
Painter OH = Outside painter respirator hood.

Booth: STP
T= 67.7 P=29.92 "Hg
P= 29.88 T=68 °F

Site Location	Date	Sample ACUREX # Number	Time Sampled (min)	Sample Flowrate (cc/min)	Sample Flowrate (l/min)	Volume Collected (l)	Volume Collected @ STP (l)	2-Butanone (MEK) (ug/tube)	2-Butanone (MEK) (mg/m3)	Ethyl Acetate (ug/tube)	Ethyl Acetate (mg/m3)
Exhaust Duct, 10:30	16 April	5F 12993	36.00	1066.00	1.066	38.38	38.35	57	1.486446	< 20	< 0.521560
Exhaust Duct, 14:45	16 April	9F 7996	54.00	1067.000	1.067	57.62	57.57	49	0.851082	< 20	< 0.347380
Exhaust Duct, Blank	17 April	7F 9995	0.00	0.000	0	0.00	0.00	< 20	< N/A	< 20	< N/A
Exhaust Duct, 10:00	17 April	8F 7995	60.00	1059.000	1.059	63.54	63.49	230	3.622552	< 20	< 0.315004
Exhaust Duct, 16:00	17 April	10F 12994	60.00	1089.000	1.089	65.34	65.29	< 20	< 0.306326	< 20	< 0.306326
Exhaust Duct,4pm Dup	17 April	6F 10994	60.00	1053.00	1.053	63.18	63.13	< 20	< 0.316799	< 20	< 0.316799
Exhaust Duct, 11:00	18 April	40F 8383	53.00	1026.00	1.026	54.38	54.34	78	1.435507	< 20	< 0.368078
Exhaust Duct, 17:00	18 April	70F 12015	60.00	1027.000	1.027	61.62	61.57	170	2.760967	< 20	< 0.324819
Exhaust Duct, 11:30	19 April	75F 11050	53.00	991.00	0.991	52.52	52.48	230	4.382403	< 20	< 0.381078
Exhaust Duct, 15:00	19 April	74F 12995	42.00	991.000	0.991	41.62	41.59	240	5.770617	< 20	< 0.480884

Site Location	Date	2-Butanol (ug/tube)	2-Butanol (mg/m3)	n-Butanol (ug/tube)	n-Butanol (mg/m3)	Methoxyacetone (ug/tube)	Methoxyacetone (mg/m3)	Ethoxyethanol (ug/tube)	Ethoxyethanol (mg/m3)	4-Methyl-2-Pentanone(MIBK) (ug/tube)	4-Methyl-2-Pentanone(MIBK) (mg/m3)
Exhaust Duct, 10:30	16 April	< 21	< 0.547638	< 21	< 0.547638	< 56	< 1.460368	< 73	< 1.903694	< 20	< 0.521560
Exhaust Duct, 14:45	16 April	< 21	< 0.364749	< 21	< 0.364749	< 56	< 0.972666	< 73	< 1.267939	210	3.647498
Exhaust Duct, Blank	17 April	< 21	< N/A	< 21	< N/A	< 56	< N/A	< 73	< N/A	< 20	< N/A
Exhaust Duct, 10:00	17 April	< 21	< 0.330754	< 21	< 0.330754	< 56	< 0.882012	< 73	< 1.149766	93	1.464771
Exhaust Duct, 16:00	17 April	< 21	< 0.321643	< 21	< 0.321643	< 56	< 0.857714	< 73	< 1.118092	48	0.735184
Exhaust Duct,4pm Dup	17 April	< 21	< 0.332639	< 21	< 0.332639	< 56	< 0.887038	< 73	< 1.156317	82	1.298877
Exhaust Duct, 11:00	18 April	< 21	< 0.386482	< 21	< 0.386482	< 56	< 1.030620	< 73	< 1.343487	230	4.232905
Exhaust Duct, 17:00	18 April	< 21	< 0.341060	< 21	< 0.341060	< 56	< 0.909495	< 73	< 1.185591	180	2.923376
Exhaust Duct, 11:30	19 April	< 21	< 0.400132	< 21	< 0.400132	< 56	< 1.067019	< 73	< 1.390936	100	1.905392
Exhaust Duct, 15:00	19 April	< 21	< 0.504929	< 21	< 0.504929	< 56	< 1.346477	< 73	< 1.755229	86	2.067804

Site Location	Date	Toluene (ug/tube)	Toluene (mg/m3)	Butyl Acetate (ug/tube)	Butyl Acetate (mg/m3)	Ethylbenzene (ug/tube)	Ethylbenzene (mg/m3)	Total Xylenes (ug/tube)	Total Xylenes (mg/m3)	PMGE Acetate (ug/tube)	PMGE Acetate (mg/m3)
Exhaust Duct, 10:30	16 April	21	0.547638	< 20	< 0.521560	< 8.2	< 0.213839	< 8.2	< 0.213839	< 20	< 0.521560
Exhaust Duct, 14:45	16 April	29	0.503702	53	0.920559	< 8.2	< 0.142426	< 8.2	< 0.142426	< 20	< 0.347380
Exhaust Duct, Blank	17 April	< 8.2	< N/A	< 20	< N/A	< 8.2	< N/A	< 8.2	< N/A	< 20	< N/A
Exhaust Duct, 10:00	17 April	27	0.425256	21	0.330754	< 8.2	< 0.129151	< 8.2	< 0.129151	< 20	< 0.315004
Exhaust Duct, 16:00	17 April	10	0.153163	< 20	< 0.306326	< 8.2	< 0.125593	< 8.2	< 0.125593	< 20	< 0.306326
Exhaust Duct,4pm Dup	17 April	17	0.269279	< 20	< 0.316799	< 8.2	< 0.129887	< 8.2	< 0.129887	< 20	< 0.316799
Exhaust Duct, 11:00	18 April	35	0.644137	61	1.122640	< 8.2	< 0.150912	< 8.2	< 0.150912	< 20	< 0.368078
Exhaust Duct, 17:00	18 April	21	0.341060	39	0.633398	< 8.2	< 0.133176	< 8.2	< 0.133176	< 20	< 0.324819
Exhaust Duct, 11:30	19 April	13	0.247701	27	0.514456	< 8.2	< 0.156242	< 8.2	< 0.156242	< 20	< 0.381078
Exhaust Duct, 15:00	19 April	11	0.264486	24	0.577061	< 8.2	< 0.197162	< 8.2	< 0.197162	< 20	< 0.480884

Site Location	Date	2-Ethoxyethyl Acetate (ug/tube)	2-Ethoxyethyl Acetate (mg/m3)	2-Methoxyethyl Ether (ug/tube)	2-Methoxyethyl Ether (mg/m3)	Totals
Exhaust Duct, 10:30	16 April	< 41	< 1.069198	< 54	< 1.408212	2.04
Exhaust Duct, 14:45	16 April	< 41	< 0.712130	< 54	< 0.937928	5.87
Exhaust Duct, Blank	17 April	< 41	< N/A	< 54	< N/A	N/A
Exhaust Duct, 10:00	17 April	< 41	< 0.645759	< 54	< 0.850512	5.84
Exhaust Duct, 16:00	17 April	< 41	< 0.627969	< 54	< 0.827082	0.89
Exhaust Duct,4pm Dup	17 April	< 41	< 0.649438	< 54	< 0.855358	1.57
Exhaust Duct, 11:00	18 April	< 41	< 0.754561	< 54	< 0.993812	7.44
Exhaust Duct, 17:00	18 April	< 41	< 0.665880	< 54	< 0.877013	6.65
Exhaust Duct, 11:30	19 April	< 41	< 0.781210	< 54	< 1.028912	7.05
Exhaust Duct, 15:00	19 April	< 41	< 0.985813	< 54	< 1.298389	8.68

Travis AFB NIOSH 500 Particulate

Date: 16 April 1991 STP Booth:

Start Time: 14:48 P=29.92 "Hg T= 66.6

Stop Time: 15:48 T=68 °F P= 29.87

Site Location	Date	Sample Number	Time Sampled (min)	Sample Flowrate (l/min)	Volume Collected (l)	Volume Collected @ STP (l)	Weight Gain (g)	Weight Gain (mg)	(mg/m3)
1	16 April	12	65.00	3.1	201.50	201.70	0.00016	0.2	0.793
2	16 April	15	54.00	3.02	163.08	163.24	0.00000	0.0	0.000
3	16 April	3	63.00	3.13	197.19	197.38	0.00014	0.1	0.709
4	16 April	8	62.00	3.093	191.77	191.95	0.00000	0.0	0.000
5	16 April	11	65.00	3.094	201.11	201.31	0.00009	0.1	0.447
6	16 April	19	63.00	3.098	195.17	195.37	0.00000	0.0	0.000
7	16 April	13	64.00	2.961	189.50	189.69	0.00055	0.6	2.899
8	16 April	14	62.00	3.133	194.25	194.44	0.00047	0.5	2.417
9	16 April	17	63.00	3.056	192.53	192.72	0.00021	0.2	1.090
10	16 April	16	63.00	3.059	192.72	192.91	0.00076	0.8	3.940
11	16 April	18	63.00	3.033	191.08	191.27	0.00311	3.1	16.260
12	16 April	4	62.00	3.074	190.59	190.78	0.00118	1.2	6.185
13	16 April	5	63.00	3.074	193.66	193.85	0.0008	0.8	4.127
14	16 April	9	63.00	3.068	193.28	193.47	0.00291	2.9	15.041
15	16 April	39	63.00	3.016	190.01	190.20	0.00691	6.9	36.331
16	16 April	33	62.00	3.062	189.84	190.03	0.00526	5.3	27.680
17	16 April	1	63.00	3.079	193.98	194.17	0.0143	14.3	73.648
18	16 April	37	64.00	3.077	196.93	197.12	0.00662	6.6	33.583
19	16 April	27	63.00	3.077	193.85	194.04	0.00435	4.4	22.418
20	16 April	30	62.00	3.098	192.08	192.27	0.00465	4.7	24.185
21	16 April	6	63.00	3.023	190.45	190.64	0.0002	0.2	1.049
22	16 April	2	63.00	3.076	193.79	193.98	0.00088	0.9	4.537
23	16 April	32	63.00	3.054	192.40	192.59	0.00538	5.4	27.935
24	16 April	36	62.00	3.107	192.63	192.82	0.00201	2.0	10.424
Painter OH	16 April	25	0.00	3.064	0.00	0.00	0.00000	0.0	N/A
Painter UH	16 April	24	63.00	3.086	194.42	194.61	0.00000	0.0	0.000
(Duplicate) 10	16 April	10	63.00	3.199	201.54	201.74	0.00068	0.7	3.371
(Duplicate) 15	16 April	35	0.00	3.178	0.00	0.00	0.00046	0.5	N/A
Blank	16 April	7	0.00	0	0.00	0.00	0.00000	0.0	N/A
						0.00		0.0	
Exhaust Duct	16 April			1.067	0.00	0.00		0.0	

Painter OH = Outside painter respirator hood.
Painter UH = Underneath painter respirator hood.

Travis AFB NIOSH 500 Particulate

Date: 17 April 1991 STP Booth:

Start Time: 16:05 P=29.92 "Hg T= 68

Stop Time: 17:18 T=68 °F P= 29.93

Site Location	Date	Sample Number	Time Sampled (min)	Sample Flowrate (l/min)	Volume Collected (l)	Volume Collected @ STP (l)	Weight Gain (g)	Weight Gain (mg)	(mg/m3)
1	17 April	40	84.00	3.052	256.37	256.45	0.00003	0.0	0.117
2	17 April	58	70.00	3.01	210.70	210.77	0.00000	0.0 *	0.000
3	17 April	22	83.00	3.038	252.15	252.24	0.00000	0.0 *	0.000
4	17 April	34	82.00	3.102	254.36	254.45	0.00000	0.0 *	0.000
5	17 April	52	84.00	2.87	241.08	241.16	0.00008	0.1	0.332
6	17 April	46	82.00	3.096	253.87	253.96	0.00000	0.0 *	0.000
7	17 April	29	83.00	2.964	246.01	246.09	0.00000	0.0 *	0.000
8	17 April	23	82.00	3.102	254.36	254.45	0.00042	0.4	1.651
9	17 April	43	83.00	3.045	252.74	252.82	0.00018	0.2	0.712
10	17 April	59	83.00	3.039	252.24	252.32	0.0000	0.0 *	0.000
11	17 April	45	82.00	3.02	247.64	247.72	0.00095	1.0	3.835
12	17 April	20	82.00	3.036	248.95	249.04	0.00042	0.4	1.687
13	17 April	31	82.00	3.041	249.36	249.45	0.00078	0.8	3.127
14	17 April	38	82.00	3.038	249.12	249.20	0.00179	1.8	7.183
15	17 April	48	82.00	2.963	242.97	243.05	0.00012	0.1	0.494
16	17 April	49	82.00	3.043	249.53	249.61	0.00219	2.2	8.774
17	17 April	42	83.00	3.045	252.74	252.82	0.00218	2.2	8.623
18	17 April	44	83.00	3.071	254.89	254.98	0.00522	5.2	20.472
19	17 April	41	82.00	3.048	249.94	250.02	0.00635	6.3	25.398
20	17 April	53	82.00	3.084	252.89	252.97	0.00357	3.6	14.112
21	17 April	51	82.00	3.012	246.98	247.07	0.00044	0.4	1.781
22	17 April	55	82.00	3.062	251.08	251.17	0.00065	0.7	2.588
23	17 April	47	82.00	3.026	248.13	248.21	0.00115	1.2	4.633
24	17 April	21	82.00	3.05	250.10	250.18	0.00072	0.7	2.878
Painter OH	17 April	50	78.00	3.008	234.62	234.70	0.00085	0.9	3.622
Painter UH	17 April	57	78.00	3.036	236.81	236.89	0.00000	0.0 *	0.000
(Duplicate) 10	17 April	66	82.00	3.16	259.12	259.21	0.00044	0.4	1.697
(Duplicate) 15	17 April	54	82.00	3.144	257.81	257.89	0.0024	2.4	9.306
						0.00		0.0	N/A
Blank	17 April		0.00	0	0.00	0.00		0.0	N/A
Exhaust Duct	17 April		60.00	1.053	63.18	63.20		0.0	0
Exh. Duct Dup	17 April		60.00	1.089	65.34	65.36		0.0	0

Painter OH = Outside painter respirator hood.
Painter UH = Underneath painter respirator hood.

Travis AFB NIOSH 7300 Metals

Date: 16 April, 1991 STP Booth:

Start Time: 10:45 P=29.92 "Hg T= 61

Stop Time: 11:25 T=68 °F P= 29.87

Painter UH = Underneath painter respirator hood.
Painter OH = Outside painter respirator hood.

Site Location	Date	Sample Number	Time Sampled (min)	Sample Flowrate (l/min)	Volume Collected (l)	Volume Collected @ STP (l)	Lead ug/sample	Lead ug/m3	Zinc ug/sample	Zinc ug/m3	Strontium ug/sample	Strontium ug/m3	Chromium ug/sample	Chromium ug/m3
1	16 April	9	52.00	3.075	159.90	161.78	< 1.5	< 9.27	< 1.5	< 9.27	1.07	6.61	0.57	3.52
2	16 April	26	46.00	2.983	137.22	138.83	< 1.5	< 10.80	< 1.5	< 10.80	1.32	9.51	0.33	2.38
3	16 April	43	52.00	3.025	157.30	159.15	< 1.5	< 9.43	< 1.5	< 9.43	2.49	15.65	1.23	7.73
4	16 April	32	56.00	3.062	171.47	173.49	< 1.5	< 8.65	< 1.5	< 8.65	2.60	14.99	0.77	4.44
5	16 April	40	53.00	3.109	164.78	166.71	< 1.5	< 9.00	< 1.5	< 9.00	2.25	13.50	1.73	10.38
6	16 April	34	54.00	3.085	166.59	168.55	< 1.5	< 8.90	< 1.5	< 8.90	5.13	30.44	1.20	7.12
7	16 April	35	53.00	2.957	156.72	158.56	< 1.5	< 9.46	< 1.5	< 9.46	13.80	87.03	8.27	52.16
8	16 April	30	59.00	3.044	179.60	181.71	< 1.5	< 8.26	< 1.5	< 8.26	17.64	97.08	9.21	50.69
9	16 April	49	51.00	2.998	152.90	154.69	< 1.5	< 9.70	< 1.5	< 9.70	15.11	97.68	7.67	49.58
10	16 April	38	54.00	2.975	160.65	162.54	< 1.5	< 9.23	< 1.5	< 9.23	5.69	35.01	2.27	13.97
11	16 April	65	51.00	2.968	151.37	153.15	< 1.5	< 9.79	< 1.5	< 9.79	52.11	340.26	29.52	192.76
12	16 April	25	58.00	3.009	174.52	176.57	< 1.5	< 8.50	< 1.5	< 8.50	32.75	185.48	18.18	102.96
13	16 April	8	52.00	3.001	156.05	157.89	< 1.5	< 9.50	< 1.5	< 9.50	25.05	158.66	13.26	83.98
14	16 April	44	53.00	2.989	158.42	160.28	< 1.5	< 9.36	< 1.5	< 9.36	28.00	174.70	18.75	116.98
15	16 April	24	56.00	2.91	162.96	164.87	< 1.5	< 9.10	< 1.5	< 9.10	146.40	887.95	81.86	496.50
16	16 April	39	58.00	2.969	172.20	174.23	< 1.5	< 8.61	< 1.5	< 8.61	106.20	609.55	67.50	387.43
17	16 April	10	52.00	3.015	156.78	158.62	< 1.5	< 9.46	< 1.5	< 9.46	59.85	377.31	33.72	212.58
18	16 April	61	54.00	2.993	161.62	163.52	< 1.5	< 9.17	< 1.5	< 9.17	147.50	902.02	89.73	548.74
19	16 April	45	56.00	3.018	169.01	170.99	< 1.5	< 8.77	< 1.5	< 8.77	170.80	998.87	105.50	616.98
20	16 April	27	59.00	3.035	179.07	181.17	< 1.5	< 8.28	< 1.5	< 8.28	123.50	681.68	812.00	4482.00
21	16 April	69	48.00	2.981	143.09	144.77	< 1.5	< 10.36	< 1.5	< 10.36	21.80	150.58	12.62	87.17
22	16 April	42	54.00	3.018	162.97	164.89	< 1.5	< 9.10	< 1.5	< 9.10	15.86	96.19	6.36	38.57
23	16 April	67	56.00	3.033	169.85	171.84	< 1.5	< 8.73	< 1.5	< 8.73	90.29	525.42	47.10	274.09
24	16 April	41	58.00	3.054	177.13	179.21	< 1.5	< 8.37	< 1.5	< 8.37	43.58	243.17	25.43	141.90
(Duplicate)10	16 April	48	53.00	3.177	168.38	170.36	< 1.5	< 8.80	< 1.5	< 8.80	10.14	59.52	6.41	37.63
(Duplicate)15	16 April	1	52.00	3.126	162.55	164.46	< 1.5	< 9.12	< 1.5	< 9.12	183.50	1115.76	92.88	564.75
Painter UH	16 April	28	36.00	3.022	108.79	110.07	< 1.5	< 13.63	< 1.5	< 13.63	13.37	121.47	6.96	63.23
Painter OH	16 April	33	31.00	2.993	92.78	93.87	< 1.5	< 15.98	< 1.5	< 15.98	27.18	289.54	16.53	176.09
Blank	16 April	7	0.00	0	0.00	0.00	< 1.5	< N/A	< 1.5	< N/A	1.43	N/A	0.20	N/A
Exhaust Duct	16 April		36.00	1.055		921	<8	8.7	<8	8.7	54.46	59	38.67	42

Travis AFB NIOSH 7300 Metals

Date: 17 April, 1991 STP Booth:

Start Time: 10:03 P=29.92 "Hg T= 60.7

Stop Time: 11:59 T=68 °F P= 29.77

Painter UH = Underneath painter respirator hood.
Painter OH = Outside painter respirator hood.

Site Location	Date	Sample Number	Time Sampled (min)	Sample Flowrate (l/min)	Volume Collected (l)	Volume Collected @ STP (l)	Lead ug/sample	Lead ug/m3	Zinc ug/sample	Zinc ug/m3	Strontium ug/sample	Strontium ug/m3	Chromium ug/sample	Chromium ug/m3
1	17 April	56	77.00	3.11	239.47	241.61	< 1.5	< 6.21	< 1.5	< 6.21	0.95	3.93	0.33	1.37
2	17 April	52	75.00	3.015	226.13	228.15	< 1.5	< 6.57	< 1.5	< 6.57	1.92	8.42	0.54	2.37
3	17 April	5	74.00	3.091	228.73	230.78	< 1.5	< 6.50	< 1.5	< 6.50	3.02	13.09	1.41	6.11
4	17 April	22	72.00	3.117	224.42	226.43	< 1.5	< 6.62	< 1.5	< 6.62	2.18	9.63	1.17	5.17
5	17 April	53	77.00	2.756	212.21	214.11	< 1.5	< 7.01	< 1.5	< 7.01	3.51	16.39	0.99	4.62
6	17 April	51	74.00	3.136	232.06	234.14	< 1.5	< 6.41	< 1.5	< 6.41	1.82	7.77	1.04	4.44
7	17 April	46	74.00	2.981	220.59	222.57	< 1.5	< 6.74	< 1.5	< 6.74	7.67	34.46	3.72	16.71
8	17 April	47	72.00	3.106	223.63	225.63	< 1.5	< 6.65	< 1.5	< 6.65	8.40	37.23	4.58	20.30
9	17 April	54	75.00	3.06	229.50	231.55	< 1.5	< 6.48	< 1.5	< 6.48	5.10	22.03	1.95	8.42
10	17 April	20	74.00	3.051	225.77	227.79	< 1.5	< 6.58	< 1.5	< 6.58	1.22	5.36	1.50	6.58
11	17 April	62	73.00	3.032	221.34	223.32	< 1.5	< 6.72	< 1.5	< 6.72	29.63	132.68	14.36	64.30
12	17 April	12	71.00	3.041	215.91	217.84	< 1.5	< 6.89	< 1.5	< 6.89	26.76	122.84	13.02	59.77
13	17 April	57	74.00	3.053	225.92	227.94	< 1.5	< 6.58	< 1.5	< 6.58	16.73	73.40	7.91	34.70
14	17 April	31	74.00	3.042	225.11	227.12	< 1.5	< 6.60	< 1.5	< 6.60	27.56	121.34	14.42	63.49
15	17 April	50	73.00	2.973	217.03	218.97	< 1.5	< 6.85	< 1.5	< 6.85	112.20	512.40	63.06	287.98
16	17 April	18	71.00	3.048	216.41	218.34	< 1.5	< 6.87	< 1.5	< 6.87	67.98	311.34	38.13	174.63
17	17 April	59	75.00	3.051	228.83	230.87	< 1.5	< 6.50	< 1.5	< 6.50	53.16	230.26	29.33	127.04
18	17 April	13	74.00	3.07	227.18	229.21	< 1.5	< 6.54	< 1.5	< 6.54	115.30	503.03	59.76	260.72
19	17 April	70	73.00	3.089	225.50	227.51	< 1.5	< 6.59	< 1.5	< 6.59	156.32	687.08	77.64	341.25
20	17 April	63	71.00	3.186	226.21	228.23	< 1.5	< 6.57	< 1.5	< 6.57	54.98	240.90	29.33	128.51
21	17 April	60	75.00	3.009	225.68	227.69	< 1.5	< 6.59	< 1.5	< 6.59	10.11	44.40	5.19	22.79
22	17 April	19	75.00	3.077	230.78	232.84	< 1.5	< 6.44	< 1.5	< 6.44	11.54	49.56	6.06	26.03
23	17 April	66	73.00	3.045	222.29	224.27	< 1.5	< 6.69	< 1.5	< 6.69	63.47	283.00	35.06	156.33
24	17 April	4	72.00	3.066	220.75	222.73	< 1.5	< 6.73	< 1.5	< 6.73	36.35	163.20	20.15	90.47
(Duplicate)10	17 April	11	74.00	3.186	235.76	237.87	< 1.5	< 6.31	< 1.5	< 6.31	6.02	25.31	3.65	15.34
(Duplicate)15	17 April	64	72.00	3.14	226.08	228.10	< 1.5	< 6.58	< 1.5	< 6.58	92.69	406.35	53.01	232.40
Painter UH	17 April	7	31.00	3.068	95.11	95.96	< 1.5	< 15.63	< 1.5	< 15.63	31.44	327.64	16.14	168.20
Painter OH	17 April	21	66.00	3.054	201.56	203.37	< 1.5	< 7.38	< 1.5	< 7.38	0.78	3.84	0.15	0.74
Blank	17 April	17	0.00	0	0.00	0.00	< 1.5	< N/A	< 1.5	< N/A	1.23	N/A	0.30	N/A
Exhaust Duct	17 April	8f	60.00	1.059	63.54	64.11	<8	6.7	<8	6.7	41.9	35.1	25.07	21

Travis AFB Isocyanates

Date: 19 April, 1991

Start Time: 11:26

Stop Time: 12:26

Booth: T= 64.3 P= 29.8

STP: P=29.92 "Hg T=68 °F

Site Location	Date	Sample Number	Time Sampled (min)	Sample Flowrate (l/min)	Volume Collected (l)	Volume Collected @ STP (l)	HMDI per Filter (ug)	HMDI Concentration (ug/m3)
1	19 April	8	66.0	3.082	203	205	< 1.0	< 4.9
2	19 April	6	55.0	3.314	182	183	< 1.0	< 5.5
3	19 April	2	65.0	3.048	198	199	< 1.0	< 5.0
4	19 April	4	64.0	3.115	199	200	< 1.0	< 5.0
5	19 April	20	66.0	3.069	203	204	< 1.0	< 4.9
6	19 April	14	64.0	3.144	201	202	< 1.0	< 4.9
7	19 April	7	64.0	3.015	193	194	< 1.0	< 5.2
8	19 April	13	61.0	3.094	189	190	< 1.0	< 5.3
9	19 April	22	65.0	3.160	205	207	< 1.0	< 4.8
10	19 April	23	64.0	3.069	196	198	< 1.0	< 5.1
11	19 April	51	64.0	3.158	202	203	< 1.0	< 4.9
12	19 April	43	63.0	3.112	196	197	< 1.0	< 5.1
13	19 April	15	65.0	3.125	203	204	< 1.0	< 4.9
14	19 April	5	64.0	3.149	202	203	< 1.0	< 4.9
15	19 April	59	64.0	3.167	203	204	1.3	6.4
16	19 April	58	63.0	3.119	196	198	1.0	5.1
17	19 April	34	65.0	3.136	204	205	< 1.0	< 4.9
18	19 April	18	64.0	3.120	200	201	1.5	7.5
19	19 April	19	64.0	3.131	200	202	2.5	12.4
20	19 April	9	63.0	3.162	199	200	2.2	11.0
21	19 April	21	65.0	3.120	203	204	< 1.0	< 4.9
22	19 April	25	64.0	3.151	202	203	< 1.0	< 4.9
23	19 April	1	64.0	3.118	200	201	< 1.0	< 5.0
24	19 April	35	63.0	3.136	198	199	< 1.0	< 5.0
Exhaust Duct	19 April	10	55.0	3.172	174	175	< 1.0	< 5.7
(Duplicate) 10	19 April	11	64.0	3.127	200	201	< 1.0	< 5.0
(Duplicate) 15	I9 April	24	64.0	3.156	202	203	1.6	7.9
Painter UH	19 April	54	65.0	3.116	203	204	< 1.0	< 4.9
Painter OH	19 April	41	65.0	3.106	202	203	< 1.0	< 4.9
Blank	19 April	16	0.0	N/A	N/A	N/A	< 1.0	N/A
Exhaust Duct	19 April	Tube	53.0	0.991	53	53		

Painter UH = Underneath painter respirator hood.
Painter OH = Outside painter respirator hood.

Travis AFB — Isocyanates

Date: 19 April, 1991

Start Time: 15:15

Stop Time: 16:00

Booth: T= 65.6 P= 29.88

STP P=29.92 "Hg T=68 °F

Site Location	Date	Sample Number	Time Sampled (min)	Sample Flowrate (l/min)	Volume Collected (l)	Volume Collected @ STP (l)	HMDI per Filter (ug)	HMDI Concentration (ug/m3)
1	19 April	26	49.0	3.105	152	153	< 1.0	< 6.6
2	19 April	17	40.0	3.341	134	134	< 1.0	< 7.5
3	19 April	29	47.0	3.012	142	142	< 1.0	< 7.0
4	19 April	39	46.0	3.041	140	140	< 1.0	< 7.1
5	19 April	45	48.0	3.057	147	147	< 1.0	< 6.8
6	19 April	57	47.0	3.133	147	148	< 1.0	< 6.8
7	19 April	53	47.0	3.019	142	142	< 1.0	< 7.0
8	19 April	31	45.0	3.103	140	140	< 1.0	< 7.1
9	19 April	46	48.0	3.132	150	151	< 1.0	< 6.6
10	19 April	48	47.0	3.044	143	144	< 1.0	< 7.0
11	19 April	30	47.0	3.035	143	143	< 1.0	< 7.0
12	19 April	37	46.0	3.116	143	144	< 1.0	< 7.0
13	19 April	12	47.0	3.118	147	147	< 1.0	< 6.8
14	19 April	47	47.0	3.143	148	148	< 1.0	< 6.7
15	19 April	32	46.0	3.176	146	147	1.2	8.2
16	19 April	33	46.0	3.155	145	146	< 1.0	< 6.9
17	19 April	38	47.0	3.128	147	147	< 1.0	< 6.8
18	19 April	42	47.0	3.133	147	148	< 1.0	< 6.8
19	19 April	40	47.0	3.120	147	147	2.8	19.0
20	19 April	52	45.0	3.159	142	143	< 1.0	< 7.0
21	19 April	3	47.0	3.109	146	147	< 1.0	< 6.8
22	19 April	55	47.0	3.150	148	149	< 1.0	< 6.7
23	19 April	28	46.0	3.131	144	144	< 1.0	< 6.9
24	19 April	49	46.0	3.128	144	144	< 1.0	< 6.9
Exhaust Duct	19 April	36	42.0	3.159	133	133	< 1.0	< 7.5
Exh. Duct Dup.	19 April	44	42.0	3.129	131	132	< 1.0	< 7.6
Exh. Duct Blnk	19 April	27	42.0	N/A	N/A	N/A	< 1.0	N/A
(Duplicate) 10	19 April	70	47.0	3.130	147	148	< 1.0	< 6.8
(Duplicate) 15	19 April	50	46.0	3.168	146	146	1.3	8.9
Painter UH	19 April	72	48.0	3.098	149	149	< 1.0	< 6.7
Painter OH	19 April	71	48.0	3.185	153	153	< 1.0	< 6.5
Blank	19 April	56	0.0	N/A	N/A	N/A	< 1.0	N/A
Exhaust Duct	19 April	Charcoal Tube	42.0	0.991	42	42		

Painter UH = Underneath painter respirator hood.
Painter OH = Outside painter respirator hood.

APPENDIX G

REDUCED DATA FOR THE POSTMODIFICATION TEST SERIES

TEST: ORGANICS #1 TRAVIS AFB PAINT: LT GREEN PRIMER, GRAY TOPCOAT
DATE: 06-16-92 PAINT BOOTH TESTS OBJECT: AUXILIARY RAMP
METHOD: NIOSH 1300 ACUREX PROJECT 8485

GRID LOC	ACUREX TUBE #	ACUREX SAMPLE #	PUMP #	PRE-CAL (ml/min)	POST-CAL (ml/min)	RUN TIME (min)	MEK (ug)	MIBK (ug)	TOLUENE (ug)	BUTYL ACETATE (ug)	ETHYL BENZENE (ug)	XYLENES (ug)
1	15	900433&4	27	1012	1009	63	142	186	78	24	nd	nd
2	22	900456&5	22	1010	1247	63	13	178	85	25	nd	nd
3	25	900457&8	35	1000	1025	63	169	180	74	22	nd	nd
4	24	900469&70	19	1001	1003	63	nd	nd	nd	nd	nd	nd
5	10	900435&6	9	1024	955	63	117	163	69	21	nd	nd
6	20	900454&3	7	1016	1015	63	170	175	81	25	nd	nd
7	14	900459&60	21	1000	998	63	340	223	97	27	nd	nd
8	11	900471&2	28	1010	1021	63	304	203	89	28	nd	nd
9	54	900437&8	10	1025	1076	63	174	244	105	30	nd	nd
10	5	900451&2	39	1010	958	63	315	284	115	31	nd	nd
11	56	900461&2	20	1010	1017	63	732	539	145	72	nd	nd
12	59	900473&4	25	1030	1087	63	671	490	221	63	nd	nd
21	18	900439&40	11	1024	1081	63	177	294	139	45	nd	20.6
22	8	900450&49	8	1025	961	63	284	350	158	50	nd	nd
23	58	900463&4	38	1042	1074	63	772	655	301	93	nd	nd
24	29	900475&6	24	1020	1024	63	553	411	187	61	nd	nd
13	1	900441&2	23	742	726	63	113	1878	110	35	nd	nd
14	13	900447&8	30	1016	1006	63	295	2459	364	112	nd	27.8
15	28	900465&6	36	1025	1042	63	nd	nd	nd	nd	nd	nd
16	2	900478&7	29	984	995	63	547	65	208	66	nd	16.2
17	53	900443&4	1	850	836	63	130	213	92	27	nd	nd
18	6	900445&6	5	862	859	63	154	244	106	29	nd	nd
19	23	900467&8	14	633	629	63	533	189	83	23	nd	nd
20	16	900479&80	16	938	904	63	nd	12	nd	nd	nd	nd
P over	19	900487&8	18	1017	1003	63	27	1386	146	nd	nd	13.8
P under	12	900490&89	17	1000	981	63	nd	nd	nd	nd	nd	nd
1A	3	900491&2	6	1029	1006	63	119	1616	81	25	nd	nd
2A	26	900494&3	2	1031	1068	63	142	1965	95	29	nd	nd
3A	21	900495&6	3	1018	956	63	117	1594	80	24	nd	nd
1B	9	900481&2	33	1010	1018	63	nd	nd	nd	nd	nd	nd
2B	17	900483&4	32	1020	1015	63	97	138	66	20	nd	nd
3B	27	900485&6	31	1010	1003	63	103	147	71	22	nd	nd
TUBE BLN	30	900497&8				63	nd	nd	nd	nd	nd	nd
EXHAUST	51	900277&6	37	1021	1036	63	282	377	43	52	nd	nd
RECIRC	33	900275	12	1036	1098	63	235	nd	nd	nd	nd	nd

TEST: ORGANICS #1
DATE: 06-16-92
METHOD: NIOSH 1300

D E INITIALS: BN & LJL
Q A INITIALS: LJL

GRID LOC	ACUREX TUBE #	ACUREX SAMPLE #	AVG FLOW (L/MIN)	MEK (mg/M3)	MIBK (mg/M3)	TOLUENE (mg/M3)	BUTYL ACETATE (mg/M3)	ETHYL BENZENE (mg/M3)	XYLENES (mg/M3)
1	15	900433&4	1.011	2.2	2.9	1.2	0.4	< MDL	< MDL
2	22	900456&5	1.129	0.2	2.5	1.2	0.4	< MDL	< MDL
3	25	900457&8	1.013	2.6	2.8	1.2	0.3	< MDL	< MDL
4	24	900469&70	1.002	< MDL	< MDL	< MDL	< MDL	< MDL	< MDL
5	10	900435&6	0.990	1.9	2.6	1.1	0.3	< MDL	< MDL
6	20	900454&3	1.016	2.7	2.7	1.3	0.4	< MDL	< MDL
7	14	900459&60	0.999	5.4	3.5	1.5	0.4	< MDL	< MDL
8	11	900471&2	1.016	4.8	3.2	1.4	0.4	< MDL	< MDL
9	54	900437&8	1.051	2.6	3.7	1.6	0.5	< MDL	< MDL
10	5	900451&2	0.984	5.1	4.6	1.9	0.5	< MDL	< MDL
11	56	900461&2	1.014	11.5	8.4	2.3	1.1	< MDL	< MDL
12	59	900473&4	1.059	10.1	7.3	3.3	0.9	< MDL	< MDL
21	18	900439&40	1.053	2.7	4.4	2.1	0.7	< MDL	0.3
22	8	900450&49	0.993	4.5	5.6	2.5	0.8	< MDL	< MDL
23	58	900463&4	1.058	11.6	9.8	4.5	1.4	< MDL	< MDL
24	29	900475&6	1.022	8.6	6.4	2.9	0.9	< MDL	< MDL
13	1	900441&2	0.734	2.4	40.6	2.4	0.8	< MDL	< MDL
14	13	900447&8	1.011	4.6	38.6	5.7	1.8	< MDL	0.4
15	28	900465&6	1.034	< MDL	< MDL	< MDL	< MDL	< MDL	< MDL
16	2	900478&7	0.990	8.8	1.0	3.3	1.1	< MDL	0.3
17	53	900443&4	0.843	2.4	4.0	1.7	0.5	< MDL	< MDL
18	6	900445&6	0.861	2.8	4.5	2.0	0.5	< MDL	< MDL
19	23	900467&8	0.631	13.4	4.8	2.1	0.6	< MDL	< MDL
20	16	900479&80	0.921	< MDL	0.2	< MDL	< MDL	< MDL	< MDL
P over	19	900487&8	1.010	0.4	21.8	2.3	< MDL	< MDL	0.2
P under	12	900490&89	0.991	< MDL	< MDL	< MDL	< MDL	< MDL	< MDL
1A	3	900491&2	1.018	1.9	25.2	1.3	0.4	< MDL	< MDL
2A	26	900494&3	1.050	2.1	29.7	1.4	0.4	< MDL	< MDL
3A	21	900495&6	0.987	1.9	25.6	1.3	0.4	< MDL	< MDL
1B	9	900481&2	1.014	< MDL	< MDL	< MDL	< MDL	< MDL	< MDL
2B	17	900483&4	1.018	1.5	2.2	1.0	0.3	< MDL	< MDL
3B	27	900485&6	1.007	1.6	2.3	1.1	0.3	< MDL	< MDL
TUBE BLN	30	900497&8	0.000	< MDL	< MDL	< MDL	< MDL	< MDL	< MDL
EXHAUST	51	900277&6	1.029	4.4	5.8	0.7	0.8	< MDL	< MDL
RECIRC	33	900275	1.067	3.5	< MDL	< MDL	< MDL	< MDL	< MDL

ORGANICS #1
DATE: 06-16-92
METHOD: NIOSH 1300

TRAVIS AFB
PAINT BOOTH TESTS
ACUREX PROJECT 8485

D E INITIALS:BN & LJL
Q A INITIALS:LJL

GRID CHART 1 - MEK

Painter Over 0.4

Painter Under < MDL

EXHAUST GRID

1 2.2	2 0.2	3 2.6	4 < MDL
5 1.9	6 2.7	7 5.4	8 4.8
9 2.6	10 5.1	11 11.5	12 10.1
21 2.7	22 4.5	23 11.6	24 8.6
13 2.4	14 4.6	15 < MDL	16 8.8
17 2.4	18 2.8	19 13.4	20 < MDL

Field Blank < MDL

INLET GRID A

1A 1.9

2A 2.1

3A 1.9

INLET GRID B

1B < MDL

2B 1.5

3B 1.6

PAINT TYPE: LT GREEN PRIMER, GRAY TOP UNITS: mg/M3 GRID MDL: 0.0115 mg/SAMPLE EXHAUST DUCT: 4.4

OBJECT: AUXILIARY RAMP OSHA TWA:590 mg/M3 PAINTER MDL: 0.0115 mg/SAMPLE RECIRC DUCT: 3.5

ORGANICS #1
DATE: 06-16-92
METHOD: NIOSH 1300

TRAVIS AFB
PAINT BOOTH TESTS
ACUREX PROJECT 8485

D E INITIALS:BN & LJL
Q A INITIALS:LJL

GRID CHART 2 - MIBK

Painter Over 21.8

Painter Under < MDL

EXHAUST GRID

1 2.9	2 2.5	3 2.8	4 < MDL
5 2.6	6 2.7	7 3.5	8 3.2
9 3.7	10 4.6	11 8.4	12 7.3
21 4.4	22 5.6	23 9.8	24 6.4
13 40.6	14 38.6	15 < MDL	16 1.0
17 4.0	18 4.5	19 4.8	20 0.2

Field Blank < MDL

INLET GRID A

1A 25.2

2A 29.7

3A 25.6

INLET GRID B

1B < MDL

2B 2.2

3B 2.3

PAINT TYPE: LT GREEN PRIMER, GRAY TOP UNITS: mg/M3 GRID MDL: 0.0095 mg/SAMPLE EXHAUST DUCT: 5.8

OBJECT: AUXILIARY RAMP OSHA TWA:205 mg/M3 PAINTER MDL: 0.0095 mg/SAMPLE RECIRC DUCT: < MDL

ORGANICS #1
DATE: 06-16-92
METHOD: NIOSH 1300

TRAVIS AFB
PAINT BOOTH TESTS
ACUREX PROJECT 8485

D E INITIALS:BN & LJL
Q A INITIALS:LJL

GRID CHART 3 - TOLUENE

Painter Over 2.3

Painter Under < MDL

INLET GRID A

1A 1.3

2A 1.4

3A 1.3

EXHAUST GRID

1 1.2	2 1.2	3 1.2	4 < MDL
5 1.1	6 1.3	7 1.5	8 1.4
9 1.6	10 1.9	11 2.3	12 3.3
21 2.1	22 2.5	23 4.5	24 2.9
13 2.4	14 5.7	15 < MDL	16 3.3
17 1.7	18 2.0	19 2.1	20 < MDL

Field Blank < MDL

INLET GRID B

1B < MDL

2B 1.0

3B 1.1

PAINT TYPE: LT GREEN PRIMER, GRAY TOP UNITS: mg/M3 GRID MDL: 0.0114 mg/SAMPLE EXHAUST DUCT: 0.7

OBJECT: AUXILIARY RAMP OSHA TWA:375 mg/M3 PAINTER MDL: 0.0114 mg/SAMPLE RECIRC DUCT: < MDL

ORGANICS #1
DATE: 06-16-92
METHOD: NIOSH 1300

TRAVIS AFB
PAINT BOOTH TESTS
ACUREX PROJECT 8485

D E INITIALS:BN & LJL
Q A INITIALS:LJL

GRID CHART 4 - BUTYL ACETATE

Painter Over
< MDL

Painter Under
< MDL

INLET GRID A

1A 0.4

2A 0.4

3A 0.4

EXHAUST GRID

1 0.4	2 0.4	3 0.3	4 < MDL
5 0.3	6 0.4	7 0.4	8 0.4
9 0.5	10 0.5	11 1.1	12 0.9
21 0.7	22 0.8	23 1.4	24 0.9
13 0.8	14 1.8	15 < MDL	16 1.1
17 0.5	18 0.5	19 0.6	20 < MDL

Field Blank
< MDL

INLET GRID B

1B < MDL

2B 0.3

3B 0.3

PAINT TYPE: LT GREEN PRIMER, GRAY TOP UNITS: mg/M3 GRID MDL: 0.0116 mg/SAMPLE EXHAUST DUCT: 0.8

OBJECT: AUXILIARY RAMP OSHA TWA:710 mg/M3 PAINTER MDL: 0.0116 mg/SAMPLE RECIRC DUCT: < MDL

ORGANICS #1
DATE: 06-16-92
METHOD: NIOSH 1300

TRAVIS AFB
PAINT BOOTH TESTS
ACUREX PROJECT 8485

D E INITIALS:BN & LJL
Q A INITIALS:LJL

GRID CHART 5 - ETHYL BENZENE

Painter Over < MDL Painter Under < MDL	EXHAUST GRID					Field Blank < MDL
	1 < MDL	2 < MDL	3 < MDL	4 < MDL		
INLET GRID A	5 < MDL	6 < MDL	7 < MDL	8 < MDL		INLET GRID B
1A < MDL						1B < MDL
	9 < MDL	10 < MDL	11 < MDL	12 < MDL		
2A < MDL	21 < MDL	22 < MDL	23 < MDL	24 < MDL		2B < MDL
	13 < MDL	14 < MDL	15 < MDL	16 < MDL		
3A < MDL						3B < MDL
	17 < MDL	18 < MDL	19 < MDL	20 < MDL		

PAINT TYPE: LT GREEN PRIMER, GRAY TOP UNITS: mg/M3 GRID MDL: 0.0117 mg/SAMPLE EXHAUST DUCT: < MDL

OBJECT: AUXILIARY RAMP OSHA TWA:435 mg/M3 PAINTER MDL: 0.0117 mg/SAMPLE RECIRC DUCT: < MDL

ORGANICS #1
DATE: 06-16-92
METHOD: NIOSH 1300

TRAVIS AFB
PAINT BOOTH TESTS
ACUREX PROJECT 8485

D E INITIALS:BN & LJL
Q A INITIALS:LJL

GRID CHART 6 - XYLENES

Painter Over 0.2 Painter Under < MDL	EXHAUST GRID				Field Blank < MDL
	1 < MDL	2 < MDL	3 < MDL	4 < MDL	
INLET GRID A					INLET GRID B
	5 < MDL	6 < MDL	7 < MDL	8 < MDL	
1A < MDL					1B < MDL
	9 < MDL	10 < MDL	11 < MDL	12 < MDL	
2A < MDL	21 0.3	22 < MDL	23 < MDL	24 < MDL	2B < MDL
	13 < MDL	14 0.4	15 < MDL	16 0.3	
3A < MDL					3B < MDL
	17 < MDL	18 < MDL	19 < MDL	20 < MDL	

PAINT TYPE: LT GREEN PRIMER, GRAY TOP UNITS: mg/M3 GRID MDL: 0.0368 mg/SAMPLE EXHAUST DUCT: < MDL

OBJECT: AUXILIARY RAMP OSHA TWA:435 mg/M3 PAINTER MDL: 0.0368 mg/SAMPLE RECIRC DUCT: < MDL

TEST: ORGANICS #2 TRAVIS AFB PAINT: LT GREEN PRIMER, GRAY TOPCOAT
DATE: 06-17-92 AM PAINT BOOTH TESTS OBJECT: AUXILIARY RAMP BOTTOMS
METHOD: NIOSH 1300 ACUREX PROJECT 8485

GRID LOC	ACUREX TUBE #	ACUREX SAMPLE #	PUMP #	PRE-CAL (ml/min)	POST-CAL (ml/min)	RUN TIME (min)	MEK (ug)	MIBK (ug)	TOLUENE (ug)	BUTYL ACETATE (ug)	ETHYL BENZENE (ug)	XYLENES (ug)
1	113	900407&8	2	1033	1018	59	65	96	62	18	nd	nd
2	46	900419&20	13	1086	1078	59	209	156	77	25	nd	nd
3	116	900431&2	18	1054	1059	0	nd	nd	nd	nd	nd	nd
4	43	900509&10	22	1091	1176	0	71	nd	nd	nd	nd	nd
5	111	900409&10	1	1102	1143	59	nd	nd	nd	nd	nd	nd
6	44	900421&2	8	1031	1027	59	76	102	61	19	nd	nd
7	35	900499&500	7	1094	1096	57	289	252	122	40	nd	nd
8	119	900511&2	21	1068	1068	0	nd	nd	nd	nd	nd	nd
9	52	900411&2	11	1056	1067	59	204	225	120	37	nd	nd
10	49	900423&4	9	1060	1056	59	285	220	109	34	nd	nd
11	40	900501&2	17	1054	1045	57	401	317	169	59	nd	nd
12	108	900513&4	25	1088	1150	56	339	255	135	46	nd	nd
21	42	900413&4	3	1073	1045	59	81	178	114	32	nd	nd
22	109	900425&6	15	1095	1146	59	389	387	198	65	nd	nd
23	110	900503&4	19	1039	1034	0	nd	nd	nd	nd	nd	nd
24	117	900515&6	24	1037	1070	57?? 0	224	246	127	41	nd	nd
13	31	900415&6	10	1050	1094	59	228	370	201	65	nd	nd
14	112	900427&8	14	632	631	59	224	384	208	71	nd	nd
14 DUP	120	900527&8	37	1076	1067	59	319	726	399	135	nd	nd
15	41	900505&6	12	1084	1128	57	710	485	302	100	nd	nd
16	114	900517&8	26	847	770	56	602	244	129	45	nd	nd
17	32	900417&8	6	1100	1121	59	215	310	165	53	nd	nd
18	38	900429&30	16	953	947	0	nd	nd	nd	nd	nd	nd
19	45	900508&7	5	912	918	57	3019	385	111	86	nd	nd
20	115	900519&20	20	1081	1081	0	nd	nd	nd	nd	nd	nd
P over	47	900374&5	32	1058	1040	58	702	419	229	68	nd	nd
P under	118	900376&7	35	1056	1034	58	15	nd	nd	nd	nd	nd
1A	50	900401&2	33	1074	1050	59	82	108	65	20	nd	nd
2A	106	900403&4	31	1053	1036	59	nd	nd	nd	nd	nd	nd
3A	48	900405&6	28	1055	1028	59	74	96	58	20	nd	nd
1B	34	900521&2	30	1070	1050	59	149	139	71	22	nd	nd
2B	37	900523&4	29	990	981	59	nd	nd	nd	nd	nd	nd
3B	107	900525&6	27	1054	1148	59	nd	nd	nd	nd	nd	nd
EXHAUST	36	900266&7	36	1061	1048	49	298	252	158	49	nd	nd
RECIRC	39	900268&9	39	1064	1067	48	105	135	84	25	nd	nd

TEST: ORGANICS #2
DATE: 06-17-92 AM
METHOD: NIOSH 1300

D E INITIALS: BN & LJL
Q A INITIALS: LJL

GRID LOC	ACUREX TUBE #	ACUREX SAMPLE #	AVG FLOW (L/MIN)	MEK (mg/M3)	MIBK (mg/M3)	TOLUENE (mg/M3)	BUTYL ACETATE (mg/M3)	ETHYL BENZENE (mg/M3)	XYLENES (mg/M3)
1	113	900407&8	1.026	1.1	1.6	1.0	0.3	< MDL	< MDL
2	46	900419&20	1.082	3.3	2.4	1.2	0.4	< MDL	< MDL
3	116	900431&2	1.057	no sample	no sample	no sample	no sample	no sample	no sample
4	43	900509&10	1.134	no sample	no sample	no sample	no sample	no sample	no sample
5	111	900409&10	1.123	< MDL	< MDL	< MDL	< MDL	< MDL	< MDL
6	44	900421&2	1.029	1.3	1.7	1.0	0.3	< MDL	< MDL
7	35	900499&500	1.095	4.6	4.0	2.0	0.6	< MDL	< MDL
8	119	900511&2	1.068	no sample	no sample	no sample	no sample	no sample	no sample
9	52	900411&2	1.062	3.3	3.6	1.9	0.6	< MDL	< MDL
10	49	900423&4	1.058	4.6	3.5	1.7	0.5	< MDL	< MDL
11	40	900501&2	1.050	6.7	5.3	2.8	1.0	< MDL	< MDL
12	108	900513&4	1.119	5.4	4.1	2.2	0.7	< MDL	< MDL
21	42	900413&4	1.059	1.3	2.8	1.8	0.5	< MDL	< MDL
22	109	900425&6	1.121	5.9	5.9	3.0	1.0	< MDL	< MDL
23	110	900503&4	1.037	no sample	no sample	no sample	no sample	no sample	no sample
24	117	900515&6	1.054	no sample	no sample	no sample	no sample	no sample	no sample
13	31	900415&6	1.072	3.6	5.8	3.2	1.0	< MDL	< MDL
14	112	900427&8	0.632	6.0	10.3	5.6	1.9	< MDL	< MDL
14 DUP	120	900527&8	1.072	5.0	11.5	6.3	2.1	< MDL	< MDL
15	41	900505&6	1.106	11.3	7.7	4.8	1.6	< MDL	< MDL
16	114	900517&8	0.809	13.3	5.4	2.8	1.0	< MDL	< MDL
17	32	900417&8	1.111	3.3	4.7	2.5	0.8	< MDL	< MDL
18	38	900429&30	0.950	no sample	no sample	no sample	no sample	no sample	no sample
19	45	900508&7	0.915	57.9	7.4	2.1	1.6	< MDL	< MDL
20	115	900519&20	1.081	no sample	no sample	no sample	no sample	no sample	no sample
P over	47	900374&5	1.049	11.5	6.9	3.8	1.1	< MDL	< MDL
P under	118	900376&7	1.045	0.2	< MDL	< MDL	< MDL	< MDL	< MDL
1A	50	900401&2	1.062	1.3	1.7	1.0	0.3	< MDL	< MDL
2A	106	900403&4	1.045	< MDL	< MDL	< MDL	< MDL	< MDL	< MDL
3A	48	900405&6	1.042	1.2	1.6	0.9	0.3	< MDL	< MDL
1B	34	900521&2	1.060	2.4	2.2	1.1	0.4	< MDL	< MDL
2B	37	900523&4	0.986	< MDL	< MDL	< MDL	< MDL	< MDL	< MDL
3B	107	900525&6	1.101	< MDL	< MDL	< MDL	< MDL	< MDL	< MDL
EXHAUST	36	900266&7	1.055	5.8	4.9	3.1	0.9	< MDL	< MDL
RECIRC	39	900268&9	1.066	2.1	2.6	1.6	0.5	< MDL	< MDL

TEST: ORGANICS #2
DATE: 06-17-92 AM
METHOD: NIOSH 1300

TRAVIS AFB
PAINT BOOTH TESTS
ACUREX PROJECT 8485

D E INITIALS:BN & LJL
Q A INITIALS:LJL

GRID CHART 1 - MEK

Painter Over
11.5

Painter Under
0.2

INLET GRID A

1A
1.3

2A
< MDL

3A
1.2

EXHAUST GRID

1 1.1	2 3.3	3 no sample	4 no sample
5 < MDL	6 1.3	7 4.6	8 no sample
9 3.3	10 4.6	11 6.7	12 5.4
21 1.3	22 5.9	23 no sample	24 no sample
13 3.6	14 6.0 5.0	15 11.3	16 13.3
17 3.3	18 no sample	19 57.9	20 no sample

INLET GRID B

1B
2.4

2B
< MDL

3B
< MDL

PAINT TYPE: LT GREEN PRIMER, GRAY TOP UNITS: mg/M3 GRID MDL: 0.0115 mg/SAMPLE EXHAUST DUCT: 5.8

OBJECT: AUXILIARY RAMP BOTTOMS OSHA TWA:590 mg/M3 PAINTER MDL: 0.0115 mg/SAMPLE RECIRC DUCT: 2.1

TEST: ORGANICS #2
DATE: 06-17-92 AM
METHOD: NIOSH 1300

TRAVIS AFB
PAINT BOOTH TESTS
ACUREX PROJECT 8485

D E INITIALS:BN & LJL
Q A INITIALS:LJL

GRID CHART 2 - MIBK

Painter Over
6.9

Painter Under
< MDL

INLET GRID A

1A
1.7

2A
< MDL

3A
1.6

EXHAUST GRID

1 1.6	2 2.4	3 no sample	4 no sample
5 < MDL	6 1.7	7 4.0	8 no sample
9 3.6	10 3.5	11 5.3	12 4.1
21 2.8	22 5.9	23 no sample	24 no sample
13 5.8	14 10.3 11.5	15 7.7	16 5.4
17 4.7	18 no sample	19 7.4	20 no sample

INLET GRID B

1B
2.2

2B
< MDL

3B
< MDL

PAINT TYPE: LT GREEN PRIMER, GRAY TOP UNITS: mg/M3 GRID MDL: 0.0095 mg/SAMPLE EXHAUST DUCT: 4.9

OBJECT: AUXILIARY RAMP BOTTOMS OSHA TWA:205 mg/M3 PAINTER MDL: 0.0095 mg/SAMPLE RECIRC DUCT: 2.6

TEST: ORGANICS #2
DATE: 06-17-92 AM
METHOD: NIOSH 1300

TRAVIS AFB
PAINT BOOTH TESTS
ACUREX PROJECT 8485

D E INITIALS:BN & LJL
Q A INITIALS:LJL

GRID CHART 3 - TOLUENE

Painter Over 3.8

Painter Under < MDL

INLET GRID A

1A 1.0

2A < MDL

3A 0.9

EXHAUST GRID

1 1.0	2 1.2	3 no sample	4 no sample
5 < MDL	6 1.0	7 2.0	8 no sample
9 1.9	10 1.7	11 2.8	12 2.2
21 1.8	22 3.0	23 no sample	24 no sample
13 3.2	14 5.6 6.3	15 4.8	16 2.8
17 2.5	18 no sample	19 2.1	20 no sample

INLET GRID B

1B 1.1

2B < MDL

3B < MDL

PAINT TYPE: LT GREEN PRIMER, GRAY TOP UNITS: mg/M3 GRID MDL: 0.0114 mg/SAMPLE EXHAUST DUCT: 3.1

OBJECT: AUXILIARY RAMP BOTTOMS OSHA TWA:375 mg/M3 PAINTER MDL: 0.0114 mg/SAMPLE RECIRC DUCT: 1.6

TEST: ORGANICS #2
DATE: 06-17-92 AM
METHOD: NIOSH 1300

TRAVIS AFB
PAINT BOOTH TESTS
ACUREX PROJECT 8485

D E INITIALS:BN & LJL
Q A INITIALS:LJL

GRID CHART 4 - BUTYL ACETATE

Painter Over
1.1

Painter Under
< MDL

INLET GRID A

1A
0.3

2A
< MDL

3A
0.3

EXHAUST GRID

1 0.3	2 0.4	3 no sample	4 no sample
5 < MDL	6 0.3	7 0.6	8 no sample
9 0.6	10 0.5	11 1.0	12 0.7
21 0.5	22 1.0	23 no sample	24 no sample
13 1.0	14 1.9 2.1	15 1.6	16 1.0
17 0.8	18 no sample	19 1.6	20 no sample

INLET GRID B

1B
0.4

2B
< MDL

3B
< MDL

PAINT TYPE: LT GREEN PRIMER, GRAY TOP UNITS: mg/M3 GRID MDL: 0.0116 mg/SAMPLE EXHAUST DUCT: 0.9

OBJECT: AUXILIARY RAMP BOTTOMS OSHA TWA:710 mg/M3 PAINTER MDL: 0.0116 mg/SAMPLE RECIRC DUCT: 0.5

TEST: ORGANICS #2
DATE: 06-17-92 AM
METHOD: NIOSH 1300

TRAVIS AFB
PAINT BOOTH TESTS
ACUREX PROJECT 8485

D E INITIALS:BN & LJL
Q A INITIALS:LJL

GRID CHART 5 - ETHYL BENZENE

Painter Over
< MDL

Painter Under
< MDL

INLET GRID A

1A
< MDL

2A
< MDL

3A
< MDL

EXHAUST GRID

1 < MDL	2 < MDL	3 no sample	4 no sample
5 < MDL	6 < MDL	7 < MDL	8 no sample
9 < MDL	10 < MDL	11 < MDL	12 < MDL
21 < MDL	22 < MDL	23 no sample	24 no sample
13 < MDL	14 < MDL < MDL	15 < MDL	16 < MDL
17 < MDL	18 no sample	19 < MDL	20 no sample

INLET GRID B

1B
< MDL

2B
< MDL

3B
< MDL

PAINT TYPE: LT GREEN PRIMER, GRAY TOP UNITS: mg/M3 GRID MDL: 0.0117 mg/SAMPLE EXHAUST DUCT: < MDL

OBJECT: AUXILIARY RAMP BOTTOMS OSHA TWA:435 mg/M3 PAINTER MDL: 0.0117 mg/SAMPLE RECIRC DUCT: < MDL

TEST: ORGANICS #2
DATE: 06-17-92 AM
METHOD: NIOSH 1300

TRAVIS AFB
PAINT BOOTH TESTS
ACUREX PROJECT 8485

D E INITIALS:BN & LJL
Q A INITIALS:LJL

GRID CHART 6 - XYLENES

Painter Over
< MDL

Painter Under
< MDL

INLET GRID A

1A

2A
< MDL

3A
< MDL

EXHAUST GRID

1 < MDL	2 < MDL	3 no sample	4 no sample
5 < MDL	6 < MDL	7 < MDL	8 no sample
9 < MDL	10 < MDL	11 < MDL	12 < MDL
21 < MDL	22 < MDL	23 no sample	24 no sample
13 < MDL	14 < MDL < MDL	15 < MDL	16 < MDL
17 < MDL	18 no sample	19 < MDL	20 no sample

INLET GRID B

1B
< MDL

2B
< MDL

3B
< MDL

PAINT TYPE: LT GREEN PRIMER, GRAY TOP UNITS: mg/M3 GRID MDL: 0.0368 mg/SAMPLE EXHAUST DUCT: < MDL

OBJECT: AUXILIARY RAMP BOTTOMS OSHA TWA:435 mg/M3 PAINTER MDL: 0.0368 mg/SAMPLE RECIRC DUCT: < MDL

TEST: ORGANICS #3 TRAVIS AFB PAINT: LT GREEN PRIMER
DATE: 06-17-92 PM PAINT BOOTH TESTS OBJECT: METAL & WOOD BOX
METHOD: NIOSH 1300 ACUREX PROJECT 8485

GRID LOC	ACUREX TUBE #	ACUREX SAMPLE #	PUMP #	PRE-CAL (ml/min)	POST-CAL (ml/min)	RUN TIME (min)	MEK (ug)	MIBK (ug)	TOLUENE (ug)	BUTYL ACETATE (ug)	ETHYL BENZENE (ug)	XYLENES (ug)
1	149	900813&4	21	1068	1046	49	412	339	nd	91	nd	nd
2	135	900825&6	1	1143	1126	0	nd	nd	nd	nd	nd	nd
3	132	900837&8	25	1150	1175	5	nd	nd	nd	nd	nd	nd
4	96	900849&50	20	1081	1073	0	nd	nd	nd	nd	nd	nd
5	18	900815&6	18	1059	1054	0	14	nd	nd	nd	nd	nd
6	105	900827&8	14	631	625	49	65	196	nd	55	nd	nd
7	103	900839&40	26	770	750	49	470	314	17	81	nd	nd
8	100	900851&2	24	1070	1160	49	601	467	nd	73	nd	nd
9	104	900817&8	19	1034	1002	29	481	667	18	191	nd	nd
10	91	900829&30	10	1094	1072	50	877	1113	31	299	nd	20
11	136	900841&2	8	1008	1027	49	1178	805	21	204	nd	14
12	129	900853&4	22	1091	1274	0	nd	nd	nd	nd	nd	nd
21	131	900819&20	2	1018	1076	38	264	270	nd	73	nd	nd
22	146	900831&2	17	1096	1125	49	985	1385	39	374	nd	54
23	134	900843&4	5	918	907	49	1038	834	21	208	nd	nd
24	140	900855&6	32	1040	1061	48	1203	659	16	152	nd	nd
13	126	900821&2	12	1128	1084	30	445	602	17	167	nd	nd
14	128	900833&4	6	1121	1108	49	725	1094	31	293	nd	nd
15	95	900845&6	15	1146	1181	49	2632	71	191	269	nd	nd
16	141	900857&8	9	1056	1048	50	1510	81	18	168	nd	nd
17	93	900823&4	16	947	928	1	nd	nd	nd	nd	nd	nd
18	142	900835&6	11	1067	1112	50	852	484	13	130	nd	nd
19	148	900847&8	13	1078	1171	48	5845	477	nd	125	nd	nd
20	124	900859&60	29	981	978	0	nd	nd	nd	nd	nd	nd
P over	150	900386&7	31	1036	993	49	133	236	nd	61	nd	nd
P under	101F	900388	33	1050	1045	0	nd	nd	nd	nd	nd	nd
1A	94	900801&2	38	1067	1062	49	399	336	nd	88	nd	nd
2A	147	900803&4	28	1028	1012	49	132	128	nd	35	nd	nd
3A	143	900805&6	37	1067	1059	49	373	342	nd	90	nd	nd
1B	138	900807&8	17	1045	1024	49	287	234	nd	62	nd	nd
2B	139	900809&10	30	1050	1060	0	nd	nd	nd	nd	nd	nd
3B	92	900811&2	35	1034	1023	49	323	275	nd	73	nd	nd
EXHAUST	125	900270&1	36	1048	1056	46	1145	680	16	161	nd	nd
RECIRC	98	900272&3	39	1067	997	46	nd	606	14	136	nd	nd

ADDITIONAL ORGANIC SPECIES							2-METHOXY ETHYL ETHER	ETHYL ACETATE
10	91	900829&30	10	1094	1072	50	51	nd
22	146	900831&2	17	1096	1125	49	62	nd
RECIRC	98	900272&3	39	1067	997	46	nd	706

TEST: ORGANICS #3
DATE: 06-17-92 PM
METHOD: NIOSH 1300

D E INITIALS: BN & LJL
Q A INITIALS: LJL

GRID LOC	ACUREX TUBE #	ACUREX SAMPLE #	AVG FLOW (L/MIN)	MEK (mg/M3)	MIBK (mg/M3)	TOLUENE (mg/M3)	BUTYL ACETATE (mg/M3)	ETHYL BENZENE (mg/M3)	XYLENES (mg/M3)
1	149	900813&4	1.057	8.0	6.5	< MDL	1.8	< MDL	< MDL
2	135	900825&6	1.1345	no sample	no sample	no sample	no sample	no sample	no sample
3	132	900837&8	1.1625	< MDL	< MDL	< MDL	< MDL	< MDL	< MDL
4	96	900849&50	1.077	no sample	no sample	no sample	no sample	no sample	no sample
5	18	900815&6	1.0565	no sample	no sample	no sample	no sample	no sample	no sample
6	105	900827&8	0.628	2.1	6.4	< MDL	1.8	< MDL	< MDL
7	103	900839&40	0.76	12.6	8.4	0.5	2.2	< MDL	< MDL
8	100	900851&2	1.115	11.0	8.5	< MDL	1.3	< MDL	< MDL
9	104	900817&8	1.018	16.3	22.6	0.6	6.5	< MDL	< MDL
10	91	900829&30	1.083	16.2	20.6	0.6	5.5	< MDL	0.4
11	136	900841&2	1.0175	23.6	16.1	0.4	4.1	< MDL	0.3
12	129	900853&4	1.1825	no sample	no sample	no sample	no sample	no sample	no sample
21	131	900819&20	1.047	6.6	6.8	< MDL	1.8	< MDL	< MDL
22	146	900831&2	1.1105	18.1	25.5	0.7	6.9	< MDL	1.0
23	134	900843&4	0.9125	23.2	18.7	0.5	4.7	< MDL	< MDL
24	140	900855&6	1.0505	23.9	13.1	0.3	3.0	< MDL	< MDL
13	126	900821&2	1.106	13.4	18.1	0.5	5.0	< MDL	< MDL
14	128	900833&4	1.1145	13.3	20.0	0.6	5.4	< MDL	< MDL
15	95	900845&6	1.1635	46.2	1.2	3.4	4.7	< MDL	< MDL
16	141	900857&8	1.052	28.7	1.5	0.3	3.2	< MDL	< MDL
17	93	900823&4	0.9375	< MDL	< MDL	< MDL	< MDL	< MDL	< MDL
18	142	900835&6	1.0895	15.6	8.9	0.2	2.4	< MDL	< MDL
19	148	900847&8	1.1245	108.3	8.8	< MDL	2.3	< MDL	< MDL
20	124	900859&60	0.9795	no sample	no sample	no sample	no sample	no sample	no sample
P over	150	900386&7	1.0145	2.7	4.7	< MDL	1.2	< MDL	< MDL
P under	101F	900388	1.0475	no sample	no sample	no sample	no sample	no sample	no sample
1A	94	900801&2	1.0645	7.6	6.4	< MDL	1.7	< MDL	< MDL
2A	147	900803&4	1.02	2.6	2.6	< MDL	0.7	< MDL	< MDL
3A	143	900805&6	1.063	7.2	6.6	< MDL	1.7	< MDL	< MDL
1B	138	900807&8	1.0345	5.7	4.6	< MDL	1.2	< MDL	< MDL
2B	139	900809&10	1.055	no sample	no sample	no sample	no sample	no sample	no sample
3B	92	900811&2	1.0285	6.4	5.5	< MDL	1.4	< MDL	< MDL
EXHAUST	125	900270&1	1.052	23.7	14.1	0.3	3.3	< MDL	< MDL
RECIRC	98	900272&3	1.032	< MDL	12.8	0.3	2.9	< MDL	< MDL

ADDITIONAL ORGANIC SPECIES				2-METHOXY ETHYL ETHER	ETHYL ACETATE
10	91	900829&30	1.083	0.9	< MDL
22	146	900831&2	1.1105	1.1	< MDL
RECIRC	98	900272&3	1.032	< MDL	14.9

TEST: ORGANICS #3
DATE: 06-17-92 PM
METHOD: NIOSH 1300

TRAVIS AFB
PAINT BOOTH TESTS
ACUREX PROJECT 8485

D E INITIALS:BN & LJL
Q A INITIALS:LJL

GRID CHART 1 - MEK

Painter Over 2.7

Painter Under no sample

INLET GRID A

1A	7.6
2A	2.6
3A	7.2

EXHAUST GRID

1 8.0	2 no sample	3 < MDL	4 no sample
5 no sample	6 2.1	7 12.6	8 11.0
9 16.3	10 16.2	11 23.6	12 no sample
21 6.6	22 18.1	23 23.2	24 23.9
13 13.4	14 13.3	15 46.2	16 28.7
17 < MDL	18 15.6	19 108.3	20 no sample

INLET GRID B

1B	5.7
2B	no sample
3B	6.4

PAINT TYPE: LT GREEN PRIMER
OBJECT: METAL & WOOD BOX

UNITS: mg/M3
OSHA TWA:590 mg/M3

GRID MDL: 0.0115 mg/SAMPLE
PAINTER MDL: 0.0115 mg/SAMPLE

EXHAUST DUCT: 23.7
RECIRC DUCT: < MDL

TEST: ORGANICS #3
DATE: 06-17-92 PM
METHOD: NIOSH 1300

TRAVIS AFB
PAINT BOOTH TESTS
ACUREX PROJECT 8485

D E INITIALS:BN & LJL
Q A INITIALS:LJL

GRID CHART 2 - MIBK

Painter Over
4.7

Painter Under
no sample

INLET GRID A

1A
6.4

2A
2.6

3A
6.6

EXHAUST GRID

1 6.5	2 no sample	3 < MDL	4 no sample
5 no sample	6 6.4	7 8.4	8 8.5
9 22.6	10 20.6	11 16.1	12 no sample
21 6.8	22 25.5	23 18.7	24 13.1
13 18.1	14 20.0	15 1.2	16 1.5
17 < MDL	18 8.9	19 8.8	20 no sample

INLET GRID B

1B
4.6

2B
no sample

3B
5.5

PAINT TYPE: LT GREEN PRIMER
OBJECT: METAL & WOOD BOX

UNITS: mg/M3
OSHA TWA:205 mg/M3

GRID MDL: 0.0095 mg/SAMPLE
PAINTER MDL: 0.0095 mg/SAMPLE

EXHAUST DUCT: 14.1
RECIRC DUCT: 12.8

TEST: ORGANICS #3
DATE: 06-17-92 PM
METHOD: NIOSH 1300

TRAVIS AFB
PAINT BOOTH TESTS
ACUREX PROJECT 8485

D E INITIALS:BN & LJL
Q A INITIALS:LJL

GRID CHART 3 - TOLUENE

Painter Over
< MDL

Painter Under
no sample

INLET GRID A

1A
< MDL

2A
< MDL

3A
< MDL

EXHAUST GRID

1 < MDL	2 no sample	3 < MDL	4 no sample
5 no sample	6 < MDL	7 0.5	8 < MDL
9 0.6	10 0.6	11 0.4	12 no sample
21 < MDL	22 0.7	23 0.5	24 0.3
13 0.5	14 0.6	15 3.4	16 0.3
17 < MDL	18 0.2	19 < MDL	20 no sample

INLET GRID B

1B
< MDL

2B
no sample

3B
< MDL

PAINT TYPE: LT GREEN PRIMER
OBJECT: METAL & WOOD BOX

UNITS: mg/M3
OSHA TWA:375 mg/M3

GRID MDL: 0.0114 mg/SAMPLE
PAINTER MDL: 0.0114 mg/SAMPLE

EXHAUST DUCT: 0.3
RECIRC DUCT: 0.3

TEST: ORGANICS #3
DATE: 06-17-92 PM
METHOD: NIOSH 1300

TRAVIS AFB
PAINT BOOTH TESTS
ACUREX PROJECT 8485

D E INITIALS:BN & LJL
Q A INITIALS:LJL

GRID CHART 4 - BUTYL ACETATE

Painter Over
1.2

Painter Under
no sample

INLET GRID A

1A
1.7

2A
0.7

3A
1.7

EXHAUST GRID

1 1.8	2 no sample	3 < MDL	4 no sample
5 no sample	6 1.8	7 2.2	8 1.3
9 6.5	10 5.5	11 4.1	12 no sample
21 1.8	22 6.9	23 4.7	24 3.0
13 5.0	14 5.4	15 4.7	16 3.2
17 < MDL	18 2.4	19 2.3	20 no sample

INLET GRID B

1B
1.2

2B
no sample

3B
1.4

PAINT TYPE: LT GREEN PRIMER
OBJECT: METAL & WOOD BOX

UNITS: mg/M3
OSHA TWA:710 mg/M3

GRID MDL: 0.0116 mg/SAMPLE
PAINTER MDL: 0.0116 mg/SAMPLE

EXHAUST DUCT: 3.3
RECIRC DUCT: 2.9

TEST: ORGANICS #3
DATE: 06-17-92 PM
METHOD: NIOSH 1300

TRAVIS AFB
PAINT BOOTH TESTS
ACUREX PROJECT 8485

D E INITIALS:BN & LJL
Q A INITIALS:LJL

GRID CHART 5 - ETHYL BENZENE

Painter Over
< MDL

Painter Under
no sample

INLET GRID A

1A
< MDL

2A
< MDL

3A
< MDL

EXHAUST GRID

1 < MDL	2 no sample	3 < MDL	4 no sample
5 no sample	6 < MDL	7 < MDL	8 < MDL
9 < MDL	10 < MDL	11 < MDL	12 no sample
21 < MDL	22 < MDL	23 < MDL	24 < MDL
13 < MDL	14 < MDL	15 < MDL	16 < MDL
17 < MDL	18 < MDL	19 < MDL	20 no sample

INLET GRID B

1B
< MDL

2B
no sample

3B
< MDL

PAINT TYPE: LT GREEN PRIMER
OBJECT: METAL & WOOD BOX

UNITS: mg/M3
OSHA TWA:435 mg/M3

GRID MDL: 0.0117 mg/SAMPLE
PAINTER MDL: 0.0117 mg/SAMPLE

EXHAUST DUCT: < MDL
RECIRC DUCT: < MDL

TEST: ORGANICS #3
DATE: 06-17-92 PM
METHOD: NIOSH 1300

TRAVIS AFB
PAINT BOOTH TESTS
ACUREX PROJECT 8485

D E INITIALS:BN & LJL
Q A INITIALS:LJL

GRID CHART 6 - XYLENES

Painter Over
< MDL

Painter Under
no sample

INLET GRID A

1A

2A
< MDL

3A
< MDL

EXHAUST GRID

1 < MDL	2 no sample	3 < MDL	4 no sample
5 no sample	6 < MDL	7 < MDL	8 < MDL
9 < MDL	10 0.4	11 0.3	12 no sample
21 < MDL	22 1.0	23 < MDL	24 < MDL
13 < MDL	14 < MDL	15 < MDL	16 < MDL
17 < MDL	18 < MDL	19 < MDL	20 no sample

INLET GRID B

1B
< MDL

2B
no sample

3B
< MDL

PAINT TYPE: LT GREEN PRIMER
OBJECT: METAL & WOOD BOX

UNITS: mg/M3
OSHA TWA:435 mg/M3

GRID MDL: 0.0368 mg/SAMPLE
PAINTER MDL: 0.0368 mg/SAMPLE

EXHAUST DUCT: < MDL
RECIRC DUCT: < MDL

TEST: ORGANICS #4 TRAVIS AFB PAINT: LT GREEN PRIMER
DATE: 06/18/92 PAINT BOOTH TESTS OBJECT: LADDERS
METHOD: NIOSH 1300 ACUREX PROJECT 8485

GRID LOC	ACUREX TUBE #	ACUREX SAMPLE #	PUMP #	PRE-CAL (ml/min)	POST-CAL (ml/min)	RUN TIME (min)	MEK (ug)	MIBK (ug)	TOLUENE (ug)	BUTYL ACETATE (ug)	ETHYL BENZENE (ug)	XYLENES (ug)
1	174	900867&88	1	1055	1080	0	nd	nd	nd	nd	nd	nd
2	122	900869&70	24	1071	1128	1	nd	nd	nd	nd	nd	nd
3	162	900873&4	20	1089	1082	1	nd	nd	nd	nd	nd	nd
4	178	900875&6	18	1060	1060	0	nd	nd	nd	nd	nd	nd
5	171	900877&8	5	890	878	30	31	nd	nd	13	nd	nd
6	133	900879&80	32	1053	1043	29	39	nd	nd	nd	nd	nd
7	173	900881&2	34	1001	1002	0	nd	nd	nd	nd	nd	nd
8	121	900883&4	19	1023	1033	0	nd	nd	nd	nd	nd	nd
9	163	900885&6	6	1009	1027	29	32	nd	nd	22	nd	nd
10	172	900887&8	13	1060	994	28	60	nd	nd	nd	nd	nd
11	164	900889&90	8	1023	1016	29	107	18	nd	nd	nd	nd
12	166	900891&2	35	1041	1029	29	68	nd	nd	30	nd	nd
21	165	900907&8	15	1089	1077	30	40	nd	nd	31	nd	nd
22	160	900909&10	17	1053	1046	29	71	13	nd	nd	nd	nd
23	153	900911&2	31	1036	1029	29	117	24	nd	nd	nd	nd
24	151	900913&4	37	1042	1046	29	75	nd	nd	nd	nd	nd
13	167	900893&81	2	1060	1082	22	56	nd	nd	34	nd	nd
13 DUP	127	900921&2	12	1050	1043	29	50	nd	nd	32	nd	nd
14	170	900894&72	10	1077	1037	29	128	25	nd	nd	nd	nd
15	203	900895&6	9	1089	1078	30	200	56	nd	nd	nd	nd
16	152	900897&8	7	1066	1014	30	106	20	nd	nd	nd	nd
17	130	900899&900	14	800	530	29	94	nd	nd	nd	nd	nd
18	155	900901&2	25	1022	1053	29	420	111	nd	nd	nd	nd
18 DUP	97	900923&4	11	1033	1046	30	455	nd	nd	16	nd	nd
19	169	900903&4	26	876	874	29	421	132	nd	nd	nd	nd
20	154	900905&6	33	1020	1027	0	nd	nd	nd	nd	nd	nd
P over	176	900378&9	21	1044	1040	28	nd	nd	nd	nd	nd	nd
P under	175F	900380	30	1054	1065	0	nd	nd	nd	nd	nd	nd
1A	177	900861&2	3	1057	1056	29	48	nd	nd	nd	nd	nd
2A	161	900863&4	38	1051	1046	29	45	nd	nd	nd	nd	nd
3A	179	900865&6	27	1002	1019	29	50	nd	nd	nd	nd	nd
1B	168	900915&6	16	935	915	25	nd	nd	nd	nd	nd	nd
2B	157	900917&8	29	978	968	28	42	nd	nd	nd	nd	nd
3B	158	900919&20	28	1025	1033	29	35	nd	nd	nd	nd	nd
EXHAUST	156	900274&8	36	1009	1049	31	199	59	nd	14	nd	nd
RECIRC	159	900279&80	39	1030	1028	30	76	nd	nd	nd	nd	nd

TEST: ORGANICS #4
DATE: 06/18/92
METHOD: NIOSH 1300

D E INITIALS: BN & LJL
Q A INITIALS: LJL

GRID LOC	ACUREX TUBE #	ACUREX SAMPLE #	AVG FLOW (L/MIN)	MEK (Mg/M3)	MIBK (ug/M3)	TOLUENE (ug/M3)	BUTYL ACETATE (ug/M3)	ETHYL BENZENE (ug/M3)	XYLENES (ug/M3)
1	174	900867&88	1.068	no sample	no sample	no sample	no sample	no sample	no sample
2	122	900869&70	1.100	< MDL	< MDL	< MDL	< MDL	< MDL	< MDL
3	162	900873&4	1.086	< MDL	< MDL	< MDL	< MDL	< MDL	< MDL
4	178	900875&6	1.060	no sample	no sample	no sample	no sample	no sample	no sample
5	171	900877&8	0.884	1.2	< MDL	< MDL	0.5	< MDL	< MDL
6	133	900879&80	1.048	1.3	< MDL	< MDL	< MDL	< MDL	< MDL
7	173	900881&2	1.002	no sample	no sample	no sample	no sample	no sample	no sample
8	121	900883&4	1.028	no sample	no sample	no sample	no sample	no sample	no sample
9	163	900885&6	1.018	1.1	< MDL	< MDL	0.7	< MDL	< MDL
10	172	900887&8	1.027	2.1	< MDL	< MDL	< MDL	< MDL	< MDL
11	164	900889&90	1.020	3.6	0.6	< MDL	< MDL	< MDL	< MDL
12	166	900891&2	1.035	2.3	< MDL	< MDL	1.0	< MDL	< MDL
21	165	900907&8	1.083	1.2	< MDL	< MDL	1.0	< MDL	< MDL
22	160	900909&10	1.050	2.3	0.4	< MDL	< MDL	< MDL	< MDL
23	153	900911&2	1.033	3.9	0.8	< MDL	< MDL	< MDL	< MDL
24	151	900913&4	1.044	2.5	< MDL	< MDL	< MDL	< MDL	< MDL
13	167	900893&81	1.071	2.4	< MDL	< MDL	1.4	< MDL	< MDL
13 DUP	127	900921&2	1.047	1.6	< MDL	< MDL	1.1	< MDL	< MDL
14	170	900894&72	1.057	4.2	0.8	< MDL	< MDL	< MDL	< MDL
15	203	900895&6	1.084	6.2	1.7	< MDL	< MDL	< MDL	< MDL
16	152	900897&8	1.040	3.4	0.6	< MDL	< MDL	< MDL	< MDL
17	130	900899&900	0.665	4.9	< MDL	< MDL	< MDL	< MDL	< MDL
18	155	900901&2	1.038	14.0	3.7	< MDL	< MDL	< MDL	< MDL
18 DUP	97	900923&4	1.040	14.6	< MDL	< MDL	0.5	< MDL	< MDL
19	169	900903&4	0.875	16.6	5.2	< MDL	< MDL	< MDL	< MDL
20	154	900905&6	1.024	no sample	no sample	no sample	no sample	no sample	no sample
P over	176	900378&9	1.042	< MDL	< MDL	< MDL	< MDL	< MDL	< MDL
P under	175F	900380	1.060	no sample	no sample	no sample	no sample	no sample	no sample
1A	177	900861&2	1.057	1.6	< MDL	< MDL	< MDL	< MDL	< MDL
2A	161	900863&4	1.049	1.5	< MDL	< MDL	< MDL	< MDL	< MDL
3A	179	900865&6	1.011	1.7	< MDL	< MDL	< MDL	< MDL	< MDL
1B	168	900915&6	0.925	< MDL	< MDL	< MDL	< MDL	< MDL	< MDL
2B	157	900917&8	0.973	1.5	< MDL	< MDL	< MDL	< MDL	< MDL
3B	158	900919&20	1.029	1.2	< MDL	< MDL	< MDL	< MDL	< MDL
EXHAUST	156	900274&8	1.029	6.2	1.8	< MDL	0.4	< MDL	< MDL
RECIRC	159	900279&80	1.029	2.5	< MDL	< MDL	< MDL	< MDL	< MDL

TEST: ORGANICS #4
DATE: 06/18/92
METHOD: NIOSH 1300

TRAVIS AFB
PAINT BOOTH TESTS
ACUREX PROJECT 8485

D E INITIALS:BN & LJL
Q A INITIALS:LJL

GRID CHART 1 - MEK

Painter Over
< MDL

Painter Under
no sample

INLET GRID A

1A 1.6

2A 1.5

3A 1.7

EXHAUST GRID

1 no sample	2 < MDL	3 < MDL	4 no sample
5 1.2	6 1.3	7 no sample	8 no sample
9 1.1	10 2.1	11 3.6	12 2.3
21 1.2	22 2.3	23 3.9	24 2.5
13 2.4 1.6	14 4.2	15 6.2	16 3.4
17 4.9	18 14.0 14.6	19 16.6	20 no sample

INLET GRID B

1B < MDL

2B 1.5

3B 1.2

PAINT TYPE: LT GREEN PRIMER
OBJECT: LADDERS

UNITS: mg/M3
OSHA TWA:590 mg/M3

GRID MDL: 0.0115 mg/SAMPLE
PAINTER MDL: 0.0115 mg/SAMPLE

EXHAUST DUCT: 6.2
RECIRC DUCT: 2.5

TEST: ORGANICS #4
DATE: 06/18/92
METHOD: NIOSH 1300

TRAVIS AFB
PAINT BOOTH TESTS
ACUREX PROJECT 8485

D E INITIALS:BN & LJL
Q A INITIALS:LJL

GRID CHART 2 - MIBK

Painter Over
< MDL

Painter Under
no sample

INLET GRID A

1A
< MDL

2A
< MDL

3A
< MDL

EXHAUST GRID

1 no sample	2 < MDL	3 < MDL	4 no sample
5 < MDL	6 < MDL	7 no sample	8 no sample
9 < MDL	10 < MDL	11 0.6	12 < MDL
21 < MDL	22 0.4	23 0.8	24 < MDL
13 < MDL < MDL	14 0.8	15 1.7	16 0.6
17 < MDL	18 3.7 < MDL	19 5.2	20 no sample

INLET GRID B

1B
< MDL

2B
< MDL

3B
< MDL

PAINT TYPE: LT GREEN PRIMER
OBJECT: LADDERS

UNITS: mg/M3
OSHA TWA:205 mg/M3

GRID MDL: 0.0095 mg/SAMPLE
PAINTER MDL: 0.0095 mg/SAMPLE

EXHAUST DUCT: 1.8
RECIRC DUCT: < MDL

TEST: ORGANICS #4
DATE: 06/18/92
METHOD: NIOSH 1300

TRAVIS AFB
PAINT BOOTH TESTS
ACUREX PROJECT 8485

D E INITIALS:BN & LJL
Q A INITIALS:LJL

GRID CHART 3 - TOLUENE

Painter Over
< MDL

Painter Under
no sample

INLET GRID A

1A
< MDL

2A
< MDL

3A
< MDL

EXHAUST GRID

1 no sample	2 < MDL	3 < MDL	4 no sample
5 < MDL	6 < MDL	7 no sample	8 no sample
9 < MDL	10 < MDL	11 < MDL	12 < MDL
21 < MDL	22 < MDL	23 < MDL	24 < MDL
13 < MDL < MDL	14 < MDL	15 < MDL	16 < MDL
17 < MDL	18 < MDL < MDL	19 < MDL	20 no sample

INLET GRID B

1B
< MDL

2B
< MDL

3B
< MDL

PAINT TYPE: LT GREEN PRIMER
OBJECT: LADDERS

UNITS: mg/M3
OSHA TWA:375 mg/M3

GRID MDL: 0.0114 mg/SAMPLE
PAINTER MDL: 0.0114 mg/SAMPLE

EXHAUST DUCT: < MDL
RECIRC DUCT: < MDL

TEST: ORGANICS #4
DATE: 06/18/92
METHOD: NIOSH 1300

TRAVIS AFB
PAINT BOOTH TESTS
ACUREX PROJECT 8485

D E INITIALS:BN & LJL
Q A INITIALS:LJL

GRID CHART 4 - BUTYL ACETATE

Painter Over
< MDL

Painter Under
no sample

INLET GRID A

1A
< MDL

2A
< MDL

3A
< MDL

EXHAUST GRID

1 no sample	2 < MDL	3 < MDL	4 no sample
5 0.5	6 < MDL	7 no sample	8 no sample
9 0.7	10 < MDL	11 < MDL	12 1.0
21 1.0	22 < MDL	23 < MDL	24 < MDL
13 1.4 1.1	14 < MDL	15 < MDL	16 < MDL
17 < MDL	18 < MDL 0.5	19 < MDL	20 no sample

INLET GRID B

1B
< MDL

2B
< MDL

3B
< MDL

PAINT TYPE: LT GREEN PRIMER
OBJECT: LADDERS

UNITS: mg/M3
OSHA TWA:710 mg/M3

GRID MDL: 0.0116 mg/SAMPLE
PAINTER MDL: 0.0116 mg/SAMPLE

EXHAUST DUCT: 0.4
RECIRC DUCT: < MDL

TEST: ORGANICS #4
DATE: 06/18/92
METHOD: NIOSH 1300

TRAVIS AFB
PAINT BOOTH TESTS
ACUREX PROJECT 8485

D E INITIALS:BN & LJL
Q A INITIALS:LJL

GRID CHART 5 - ETHYL BENZENE

Painter Over
< MDL

Painter Under
no sample

INLET GRID A

1A
< MDL

2A
< MDL

3A
< MDL

EXHAUST GRID

1 no sample	2 < MDL	3 < MDL	4 no sample
5 < MDL	6 < MDL	7 no sample	8 no sample
9 < MDL	10 < MDL	11 < MDL	12 < MDL
21 < MDL	22 < MDL	23 < MDL	24 < MDL
13 < MDL < MDL	14 < MDL	15 < MDL	16 < MDL
17 < MDL	18 < MDL < MDL	19 < MDL	20 no sample

INLET GRID B

1B
< MDL

2B
< MDL

3B
< MDL

PAINT TYPE: LT GREEN PRIMER
OBJECT: LADDERS

UNITS: mg/M3
OSHA TWA:435 mg/M3

GRID MDL: 0.0117 mg/SAMPLE
PAINTER MDL: 0.0117 mg/SAMPLE

EXHAUST DUCT: < MDL
RECIRC DUCT: < MDL

TEST: ORGANICS #4
DATE: 06/18/92
METHOD: NIOSH 1300

TRAVIS AFB
PAINT BOOTH TESTS
ACUREX PROJECT 8485

D E INITIALS:BN & LJL
Q A INITIALS:LJL

GRID CHART 6 - XYLENES

Painter Over
< MDL

Painter Under
no sample

INLET GRID A

1A
< MDL

2A
< MDL

3A
< MDL

EXHAUST GRID

1 no sample	2 < MDL	3 < MDL	4 no sample
5 < MDL	6 < MDL	7 no sample	8 no sample
9 < MDL	10 < MDL	11 < MDL	12 < MDL
21 < MDL	22 < MDL	23 < MDL	24 < MDL
13 < MDL < MDL	14 < MDL	15 < MDL	16 < MDL
17 < MDL	18 < MDL < MDL	19 < MDL	20 no sample

INLET GRID B

1B
< MDL

2B
< MDL

3B
< MDL

PAINT TYPE: LT GREEN PRIMER
OBJECT: LADDERS

UNITS: mg/M3
OSHA TWA:435 mg/M3

GRID MDL: 0.0368 mg/SAMPLE
PAINTER MDL: 0.0368 mg/SAMPLE

EXHAUST DUCT: < MDL
RECIRC DUCT: < MDL

TEST: ORGANICS #5 TRAVIS AFB PAINT: WHITE TOPCOAT
DATE: 06-23-92 PM PAINT BOOTH TESTS OBJECT: COMFORT PALLET
METHOD: NIOSH 1300 ACUREX PROJECT 8485

GRID LOC	ACUREX TUBE #	ACUREX SAMPLE #	PUMP #	PRE-CAL (ml/min)	POST-CAL (ml/min)	RUN TIME (min)	MEK (ug)	MIBK (ug)	TOLUENE (ug)	BUTYL ACETATE (ug)	ETHYL BENZENE (ug)	XYLENES (ug)
1	211	900943&4	40	1063	1045	0	ND	ND	ND	ND	ND	ND
2	198	900945&6	18	1028	1029	0	ND	ND	ND	ND	ND	ND
3	190	900947&8	42	1050	1044	58	76	415	73	111	ND	ND
4	238	900949&50	35	1040	1031	58	79	347	66	91	ND	ND
5	186	900951&2	33	1017	1009	0	ND	ND	ND	ND	ND	ND
6	196	900953&4	8	1017	1000	59	103	554	104	148	ND	ND
7	183	900955&6	10	1051	1043	61	111	609	102	158	ND	ND
8	215	900957&8	21	1011	1004	58	131	562	97	141	ND	ND
9	236	900959&60	41	1077	1056	60	75	330	65	77	14	14
9 DUP	60x	900927	2	1050	1050	45	104	461	85	129	ND	ND
10	192	900961&2	12	1096	1061	59	149	1073	192	297	ND	18
11	217	900963&4	25	1047	994	58	223	755	133	193	ND	12
12	219	900965&6	16	1040	988	58	183	761	133	193	ND	12
12 DUP	230	900994&5	43	1073	1055	0	ND	ND	ND	13	ND	ND
21	237	900967&8	15	1081	1042	60	86	377	74	103	ND	ND
22	216	900969&70	13	1023	974	57	190	1176	210	318	ND	22
23	226	900971&2	9	1071	1052	60	444	1226	213	348	ND	21
24	212	900973&4	29	1026	1025	0	ND	ND	ND	ND	ND	ND
13	235	900975&6	11	1060	1041	60	82	454	81	121	ND	ND
14	225	900977&8	17	1029	1017	58	208	1022	189	284	ND	18
15	181	900979&80	7	1022	1000	60	551	1227	208	344	21	20
15 DUP	184	900992&3	6	1031	1043	58	583	1370	238	371	ND	36
16	240	900981&2	5	1095	1106	59	302	842	152	224	ND	14
17	233	900983&4	1	1040	1041	0	ND	ND	ND	ND	ND	ND
18	214	900985&6	24	1031	1035	59	387	605	111	166	ND	ND
18 DUP	200x	900991	14	1009	1017	59	294	544	101	137	ND	ND
19	223	900987&8	20	1056	1035	58	949	921	166	249	ND	16
20	188	900989&90	34	1076	1073	0	ND	ND	ND	ND	15	ND
P over	228	900390&1	30	1023	1011	0	ND	ND	ND	ND	ND	ND
P OVER 2	102F	900392	19	1042	1025	59	524	3824	1113	1053	67	106
1A	222	900931&2	28	1028	1041	59	62	255	51	ND	ND	ND
2A	194	900933&7	27	1070	1044	59	69	352	73	94	ND	ND
3A	239	900934&8	3	1078	1073	59	82	336	65	88	ND	ND
1B	213	900935&6	31	1075	1068	59	164	333	65	85	ND	ND
2B	182	900939&40	22	1057	1043	51	65	363	65	99	ND	ND
3B	224	900941&2	32	1040	1032	59	63	224	46	65	ND	ND
3B DUP	145F	900925	23	848	862	59	109	426	80	117	ND	ND
F BLANK	55F	900926		TEST TIME ->		55	ND	ND	ND	ND	ND	ND
EXHAUST	185	900291&0	38	1011	994	68	223	437	80	117	ND	ND
RECIRC	187	900288&9	39	1053	1025	69	448	711	115	178	ND	ND

TEST: ORGANICS #5
DATE: 06-23-92 PM
METHOD: NIOSH 1300

D E INITIALS: BN & LJL
Q A INITIALS: LJL

GRID LOC	ACUREX TUBE #	ACUREX SAMPLE #	AVG FLOW (L/MIN)	MEK (mg/M3)	MIBK (mg/M3)	TOLUENE (mg/M3)	BUTYL ACETATE (mg/M3)	ETHYL BENZENE (mg/M3)	XYLENES (mg/M3)
1	211	900943&4	1.054	no sample	no sample	no sample	no sample	no sample	no sample
2	198	900945&6	1.029	no sample	no sample	no sample	no sample	no sample	no sample
3	190	900947&8	1.047	1.3	6.8	1.2	1.8	< MDL	< MDL
4	238	900949&50	1.036	1.3	5.8	1.1	1.5	< MDL	< MDL
5	186	900951&2	1.013	no sample	no sample	no sample	no sample	no sample	no sample
6	196	900953&4	1.009	1.7	9.3	1.7	2.5	< MDL	< MDL
7	183	900955&6	1.047	1.7	9.5	1.6	2.5	< MDL	< MDL
8	215	900957&8	1.008	2.2	9.6	1.7	2.4	< MDL	< MDL
9	236	900959&60	1.067	1.2	5.2	1.0	1.2	0.2	0.2
9 DUP	60x	900927	1.050	2.2	9.8	1.8	2.7	< MDL	< MDL
10	192	900961&2	1.079	2.3	16.9	3.0	4.7	< MDL	0.3
11	217	900963&4	1.021	3.8	12.8	2.2	3.3	< MDL	0.2
12	219	900965&6	1.014	3.1	12.9	2.3	3.3	< MDL	0.2
12 DUP	230	900994&5	1.064	no sample	no sample	no sample	no sample	no sample	no sample
21	237	900967&8	1.062	1.4	5.9	1.2	1.6	< MDL	< MDL
22	216	900969&70	0.999	3.3	20.7	3.7	5.6	< MDL	0.4
23	226	900971&2	1.062	7.0	19.2	3.3	5.5	< MDL	0.3
24	212	900973&4	1.026	no sample	no sample	no sample	no sample	no sample	no sample
13	235	900975&6	1.051	1.3	7.2	1.3	1.9	< MDL	< MDL
14	225	900977&8	1.023	3.5	17.2	3.2	4.8	< MDL	0.3
15	181	900979&80	1.011	9.1	20.2	3.4	5.7	0.3	0.3
15 DUP	184	900992&3	1.037	9.7	22.8	4.0	6.2	< MDL	0.6
16	240	900981&2	1.101	4.7	13.0	2.3	3.4	< MDL	0.2
17	233	900983&4	1.041	no sample	no sample	no sample	no sample	no sample	no sample
18	214	900985&6	1.033	6.3	9.9	1.8	2.7	< MDL	< MDL
18 DUP	200x	900991	1.013	4.9	9.1	1.7	2.3	< MDL	< MDL
19	223	900987&8	1.046	15.6	15.2	2.7	4.1	< MDL	0.3
20	188	900989&90	1.075	no sample	no sample	no sample	no sample	no sample	no sample
P over	228	900390&1	1.017	no sample	no sample	no sample	no sample	no sample	no sample
P OVER 2	102F	900392	1.034	8.6	62.7	18.3	17.3	1.1	1.7
1A	222	900931&2	1.035	1.0	4.2	0.8	< MDL	< MDL	< MDL
2A	194	900933&7	1.057	1.1	5.6	1.2	1.5	< MDL	< MDL
3A	239	900934&8	1.076	1.3	5.3	1.0	1.4	< MDL	< MDL
1B	213	900935&6	1.072	2.6	5.3	1.0	1.3	< MDL	< MDL
2B	182	900939&40	1.050	1.2	6.8	1.2	1.8	< MDL	< MDL
3B	224	900941&2	1.036	1.0	3.7	0.8	1.1	< MDL	< MDL
3B DUP	145F	900925	0.855	2.2	8.4	1.6	2.3	< MDL	< MDL
F BLANK	55F	900926	1.000	< MDL	< MDL	< MDL	< MDL	< MDL	< MDL
EXHAUST	185	900291&0	1.003	3.3	6.4	1.2	1.7	< MDL	< MDL
RECIRC	187	900288&9	1.039	6.2	9.9	1.6	2.5	< MDL	< MDL

TEST: ORGANICS #5
DATE: 06-23-92 PM
METHOD: NIOSH 1300

TRAVIS AFB
PAINT BOOTH TESTS
ACUREX PROJECT 8485

D E INITIALS:BN & LJL
Q A INITIALS:LJL

GRID CHART 1 - MEK

Painter Over
no sample

Painter Under
8.6

INLET GRID A

1A
1.0

2A
1.1

3A
1.3

EXHAUST GRID

1 no sample	2 no sample	3 1.3	4 1.3
5 no sample	6 1.7	7 1.7	8 2.2
9 1.2 2.2	10 2.3	11 3.8	12 3.1 no sample
21 1.4	22 3.3	23 7.0	24 no sample
13 1.3	14 3.5	15 9.1 9.7	16 4.7
17 no sample	18 6.3 4.9	19 15.6	20 no sample

Field Blank
< MDL

INLET GRID B

1B
2.6

2B
1.2

3B
1.0
2.2

PAINT TYPE: WHITE TOPCOAT
OBJECT: COMFORT PALLET

UNITS: mg/M3
OSHA TWA:590 mg/M3

GRID MDL: 0.0115 mg/SAMPLE
PAINTER MDL: 0.0115 mg/SAMPLE

EXHAUST DUCT: 3.3
RECIRC DUCT: 6.2

TEST: ORGANICS #5
DATE: 06-23-92 PM
METHOD: NIOSH 1300

TRAVIS AFB
PAINT BOOTH TESTS
ACUREX PROJECT 8485

D E INITIALS:BN & LJL
Q A INITIALS:LJL

GRID CHART 2 - MIBK

Painter Over
no sample

Painter Under
62.7

INLET GRID A

1A
4.2

2A
5.6

3A
5.3

EXHAUST GRID

1 no sample	2 no sample	3 6.8	4 5.8
5 no sample	6 9.3	7 9.5	8 9.6
9 5.2 9.8	10 16.9	11 12.8	12 12.9 no sample
21 5.9	22 20.7	23 19.2	24 no sample
13 7.2	14 17.2	15 20.2 22.8	16 13.0
17 no sample	18 9.9 9.1	19 15.2	20 no sample

Field Blank
< MDL

INLET GRID B

1B
5.3

2B
6.8

3B
3.7
8.4

PAINT TYPE: WHITE TOPCOAT
OBJECT: COMFORT PALLET

UNITS: mg/M3
OSHA TWA:205 mg/M3

GRID MDL: 0.0095 mg/SAMPLE
PAINTER MDL: 0.0095 mg/SAMPLE

EXHAUST DUCT: 6.4
RECIRC DUCT: 9.9

TEST: ORGANICS #5
DATE: 06-23-92 PM
METHOD: NIOSH 1300

TRAVIS AFB
PAINT BOOTH TESTS
ACUREX PROJECT 8485

D E INITIALS:BN & LJL
Q A INITIALS:LJL

GRID CHART 3 - TOLUENE

Painter Over
no sample

Painter Under
18.3

INLET GRID A

1A
0.8

2A
1.2

3A
1.0

EXHAUST GRID

1 no sample	2 no sample	3 1.2	4 1.1
5 no sample	6 1.7	7 1.6	8 1.7
9 1.0 1.8	10 3.0	11 2.2	12 2.3 no sample
21 1.2	22 3.7	23 3.3	24 no sample
13 1.3	14 3.2	15 3.4 4.0	16 2.3
17 no sample	18 1.8 1.7	19 2.7	20 no sample

Field Blank
< MDL

INLET GRID B

1B
1.0

2B
1.2

3B
0.8
1.6

PAINT TYPE: WHITE TOPCOAT
OBJECT: COMFORT PALLET

UNITS: mg/M3
OSHA TWA:375 mg/M3

GRID MDL: 0.0114 mg/SAMPLE
PAINTER MDL: 0.0114 mg/SAMPLE

EXHAUST DUCT: 1.2
RECIRC DUCT: 1.6

TEST: ORGANICS #5
DATE: 06-23-92 PM
METHOD: NIOSH 1300

TRAVIS AFB
PAINT BOOTH TESTS
ACUREX PROJECT 8485

D E INITIALS:BN & LJL
Q A INITIALS:LJL

GRID CHART 4 - BUTYL ACETATE

Painter Over
no sample

Painter Under
17.3

INLET GRID A

1A
< MDL

2A
1.5

3A
1.4

EXHAUST GRID

1 no sample	2 no sample	3 1.8	4 1.5
5 no sample	6 2.5	7 2.5	8 2.4
9 1.2 2.7	10 4.7	11 3.3	12 3.3 no sample
21 1.6	22 5.6	23 5.5	24 no sample
13 1.9	14 4.8	15 5.7 6.2	16 3.4
17 no sample	18 2.7 2.3	19 4.1	20 no sample

Field Blank
< MDL

INLET GRID B

1B
1.3

2B
1.8

3B
1.1
2.3

PAINT TYPE: WHITE TOPCOAT
OBJECT: COMFORT PALLET

UNITS: mg/M3
OSHA TWA:710 mg/M3

GRID MDL: 0.0116 mg/SAMPLE
PAINTER MDL: 0.0116 mg/SAMPLE

EXHAUST DUCT: 1.7
RECIRC DUCT: 2.5

TEST: ORGANICS #5
DATE: 06-23-92 PM
METHOD: NIOSH 1300

TRAVIS AFB
PAINT BOOTH TESTS
ACUREX PROJECT 8485

D E INITIALS:BN & LJL
Q A INITIALS:LJL

GRID CHART 5 - ETHYL BENZENE

Painter Over
no sample

Painter Under
1.1

INLET GRID A

1A
< MDL

2A
< MDL

3A
< MDL

EXHAUST GRID

1 no sample	2 no sample	3 < MDL	4 < MDL
5 no sample	6 < MDL	7 < MDL	8 < MDL
9 0.2 < MDL	10 < MDL	11 < MDL	12 < MDL no sample
21 < MDL	22 < MDL	23 < MDL	24 no sample
13 < MDL	14 < MDL	15 0.3 0.3	16 < MDL
17 no sample	18 < MDL < MDL	19 < MDL	20 no sample

Field Blank
< MDL

INLET GRID B

1B
< MDL

2B
< MDL

3B
< MDL
< MDL

PAINT TYPE: WHITE TOPCOAT
OBJECT: COMFORT PALLET

UNITS: mg/M3
OSHA TWA:435 mg/M3

GRID MDL: 0.0117 mg/SAMPLE
PAINTER MDL: 0.0117 mg/SAMPLE

EXHAUST DUCT: < MDL
RECIRC DUCT: < MDL

TEST: ORGANICS #5
DATE: 06-23-92 PM
METHOD: NIOSH 1300

TRAVIS AFB
PAINT BOOTH TESTS
ACUREX PROJECT 8485

D E INITIALS:BN & LJL
Q A INITIALS:LJL

GRID CHART 6 - XYLENES

Painter Over
no sample

Painter Under
1.7

INLET GRID A

1A

2A
< MDL

3A
< MDL

EXHAUST GRID

1 no sample	2 no sample	3 < MDL	4 < MDL
5 no sample	6 < MDL	7 < MDL	8 < MDL
9 0.2 < MDL	10 0.3	11 0.2	12 0.2 no sample
21 < MDL	22 0.4	23 0.3	24 no sample
13 < MDL	14 0.3	15 0.3 0.6	16 0.2
17 no sample	18 < MDL < MDL	19 0.3	20 no sample

Field Blank
< MDL

INLET GRID B

1B
< MDL

2B
< MDL

3B
< MDL
< MDL

PAINT TYPE: WHITE TOPCOAT
OBJECT: COMFORT PALLET

UNITS: mg/M3
OSHA TWA:435 mg/M3

GRID MDL: 0.0368 mg/SAMPLE
PAINTER MDL: 0.0368 mg/SAMPLE

EXHAUST DUCT: < MDL
RECIRC DUCT: < MDL

TEST: ORGANICS #6
DATE: 06-30-92 PM
METHOD: NIOSH 1300

TRAVIS AFB
PAINT BOOTH TESTS
ACUREX PROJECT 8485

PAINT: GUNSHIP GRAY TOPCOAT
OBJECT: C141 ENGINE

GRID LOC	ACUREX TUBE #	ACUREX SAMPLE #	PUMP #	PRE-CAL (ml/min)	POST-CAL (ml/min)	RUN TIME (min)	MEK (ug)	MIBK (ug)	TOLUENE (ug)	BUTYL ACETATE (ug)	ETHYL BENZENE (ug)	XYLENES (ug)
1	86	900999&1000	35	1057	1047	64	49	850	47	245	ND	58
2	63	901001&2	5	1056	1015	65	49	909	54	265	ND	63
3	249	901003&4	29	1053	912	46	54	564	53	163	ND	41
3 DUP	241	901005&6	20	1081	1075	64	76	999	58	285	13	73
4	77	901007&8	50	1049	1046	64	69	679	38	197	ND	50
5	257	901009&10	11	1054	1085	65	53	1048	56	309	ND	76
6	71	901011&2	17	1053	1015	64	73	1107	54	318	ND	72
7	268	901013&4	28	1076	1078	64	75	1165	48	303	15	70
8	65	901015&6	24	1053	1070	65	83	1047	34	294	13	67
9	85	901017&8	6	1096	1068	64	47	948	46	279	ND	67
10	259	901019&20	34	1052	1037	64	60	1227	58	361	13	85
11	73	901021&2	15	1053	1080	65	181	2410	75	688	33	161
11 DUP	75	901027&8	8	1081	1018	65	137	2185	68	635	30	149
12	68	901023&4	14	1085	775	47	88	623	57	174	ND	43
21	242	901043&4	13	1076	1043	62	48	945	44	282	ND	69
22	66	901045&6	43	1045	1042	64	54	1143	28	324	14	77
22 DUP	84	901047&8	12	1050	1074	64	60	1135	40	311	13	71
23	62	901049&50	1	1056	553	48	60	779	51	242	ND	64
24	260	901051&2	25	1053	1068	17	ND	281	37	86	ND	ND
13	69	901025&6	16	1077	1140	64	61	941	60	276	12	70
14	80	901029&30	47	1041	1041	64	86	1437	63	410	19	102
15	251	901031&2	33	1045	1032	64	314	2655	71	740	35	163
16	81	901033&4	32	1063	1079	65	125	1001	46	266	13	58
17	72	901035&6	30	1039	1036	64	49	763	60	227	ND	59
18	267	901037&8	40	1040	1039	0	ND	ND	75	ND	ND	ND
19	263	901039&40	18	1028	1015	64	1160	1277	49	327	14	53
20	76	901041&2	45	1072	974	47	352	604	55	160	ND	32
P over	61	900297&394	46	1112	1112	0	ND	ND	41	ND	ND	ND
P under	89F	900393	52	1051	928	64	ND	106	371	31	ND	ND
1A	266F	900395	55	1036	1019	63	45	716	66	208	ND	50
2A	67	900397&8	31	1036	1022	63	35	582	32	178	ND	45
2A DUP	70	900399&400	21	1075	1067	0	ND	ND	34	ND	ND	DN
3A	90	900796&7	51	1049	1047	63	39	584	43	173	ND	44
1B	266B	900798	49	1049	1055	64	28	644	65	200	ND	54
2B	78	900800&996	54	1058	960	42	25	349	42	146	11	28
3B	246	900997&8	19	1045	1018	63	32	581	45	160	15	39
F BLANK	89B	900296				63	ND	ND	120	ND	ND	ND
EXHAUST	245	900292&3	37	1056	1022	57	42	1112	50	323	11	78
RECIRC	265	900294&5	38	1027	1012	57	39	1061	50	307	ND	74

TEST: ORGANICS #6
DATE: 06-30-92 PM
METHOD: NIOSH 1300

D E INITIALS: BN & LJL
Q A INITIALS: LJL

GRID LOC	ACUREX TUBE #	ACUREX SAMPLE #	AVG FLOW (L/MIN)	MEK (mg/M3)	MIBK (mg/M3)	TOLUENE (mg/M3)	BUTYL ACETATE (mg/M3)	ETHYL BENZENE (mg/M3)	XYLENES (mg/M3)
1	86	900999&1000	1.052	0.7	12.6	0.7	3.6	< MDL	0.9
2	63	901001&2	1.036	0.7	13.5	0.8	3.9	< MDL	0.9
3	249	901003&4	0.983	1.2	12.5	1.2	3.6	< MDL	0.9
3 DUP	241	901005&6	1.078	1.1	14.5	0.8	4.1	0.2	1.1
4	77	901007&8	1.048	1.0	10.1	0.6	2.9	< MDL	0.7
5	257	901009&10	1.070	0.8	15.1	0.8	4.4	< MDL	1.1
6	71	901011&2	1.034	1.1	16.7	0.8	4.8	< MDL	1.1
7	268	901013&4	1.077	1.1	16.9	0.7	4.4	0.2	1.0
8	65	901015&6	1.062	1.2	15.2	0.5	4.3	0.2	1.0
9	85	901017&8	1.082	0.7	13.7	0.7	4.0	< MDL	1.0
10	259	901019&20	1.045	0.9	18.4	0.9	5.4	0.2	1.3
11	73	901021&2	1.067	2.6	34.8	1.1	9.9	0.5	2.3
11 DUP	75	901027&8	1.050	2.0	32.0	1.0	9.3	0.4	2.2
12	68	901023&4	0.930	2.0	14.3	1.3	4.0	< MDL	1.0
21	242	901043&4	1.060	0.7	14.4	0.7	4.3	< MDL	1.1
22	66	901045&6	1.044	0.8	17.1	0.4	4.9	0.2	1.2
22 DUP	84	901047&8	1.062	0.9	16.7	0.6	4.6	0.2	1.0
23	62	901049&50	0.805	1.6	20.2	1.3	6.3	< MDL	1.7
24	260	901051&2	1.061	< MDL	15.6	2.1	4.8	< MDL	< MDL
13	69	901025&6	1.109	0.9	13.3	0.8	3.9	0.2	1.0
14	80	901029&30	1.041	1.3	21.6	0.9	6.2	0.3	1.5
15	251	901031&2	1.039	4.7	39.9	1.1	11.1	0.5	2.5
16	81	901033&4	1.071	1.8	14.4	0.7	3.8	0.2	0.8
17	72	901035&6	1.038	0.7	11.5	0.9	3.4	< MDL	0.9
18	267	901037&8	1.040	no sample	no sample	no sample	no sample	no sample	no sample
19	263	901039&40	1.022	17.7	19.5	0.7	5.0	0.2	0.8
20	76	901041&2	1.023	7.3	12.6	1.1	3.3	< MDL	0.7
P over	61	900297&394	1.112	no sample	no sample	no sample	no sample	no sample	no sample
P under	89F	900393	0.990	< MDL	1.7	5.9	0.5	< MDL	< MDL
1A	266F	900395	1.028	0.7	11.1	1.0	3.2	< MDL	0.8
2A	67	900397&8	1.029	0.5	9.0	0.5	2.7	< MDL	0.7
2A DUP	70	900399&400	1.071	no sample	no sample	no sample	no sample	no sample	no sample
3A	90	900796&7	1.048	0.6	8.8	0.7	2.6	< MDL	0.7
1B	266B	900798	1.052	0.4	9.6	1.0	3.0	< MDL	0.8
2B	78	900800&996	1.009	0.6	8.2	1.0	3.4	0.3	0.7
3B	246	900997&8	1.032	0.5	8.9	0.7	2.5	0.2	0.6
F BLANK	89B	900296	1.000	< MDL	< MDL	1.9	< MDL	< MDL	< MDL
EXHAUST	245	900292&3	1.039	0.7	18.8	0.8	5.5	0.2	1.3
RECIRC	265	900294&5	1.020	0.7	18.3	0.9	5.3	< MDL	1.3

TEST: ORGANICS #6
DATE: 06-30-92 PM
METHOD: NIOSH 1300

TRAVIS AFB
PAINT BOOTH TESTS
ACUREX PROJECT 8485

D E INITIALS:BN & LJL
Q A INITIALS:LJL

GRID CHART 1 - MEK

Painter Over
no sample

Painter Under
< MDL

EXHAUST GRID

1 0.7	2 0.7	3 1.2 1.1	4 1.0
5 0.8	6 1.1	7 1.1	8 1.2
9 0.7	10 0.9	11 2.6 2.0	12 2.0
21 0.7	22 0.8 0.9	23 1.6	24 < MDL
13 0.9	14 1.3	15 4.7	16 1.8
17 0.7	18 no sample	19 17.7	20 7.3

Field Blank
< MDL

INLET GRID A

1A 0.7

2A 0.5
no sample

3A 0.6

INLET GRID B

1B 0.4

2B 0.6

3B 0.5

PAINT TYPE: GUNSHIP GRAY TOPCOAT
OBJECT: C141 ENGINE

UNITS: mg/M3
OSHA TWA:590 mg/M3

GRID MDL: 0.0115 mg/SAMPLE
PAINTER MDL: 0.0115 mg/SAMPLE

EXHAUST DUCT: 0.7
RECIRC DUCT: 0.7

TEST: ORGANICS #6
DATE: 06-30-92 PM
METHOD: NIOSH 1300

TRAVIS AFB
PAINT BOOTH TESTS
ACUREX PROJECT 8485

D E INITIALS:BN & LJL
Q A INITIALS:LJL

GRID CHART 2 - MIBK

Painter Over
no sample

Painter Under
1.7

Field Blank
< MDL

INLET GRID A

1A
11.1

2A
9.0
no sample

3A
8.8

EXHAUST GRID

1 12.6	2 13.5	3 12.5 14.5	4 10.1
5 15.1	6 16.7	7 16.9	8 15.2
9 13.7	10 18.4	11 34.8 32.0	12 14.3
21 14.4	22 17.1 16.7	23 20.2	24 15.6
13 13.3	14 21.6	15 39.9	16 14.4
17 11.5	18 no sample	19 19.5	20 12.6

INLET GRID B

1B
9.6

2B
8.2

3B
8.9

PAINT TYPE: GUNSHIP GRAY TOPCOAT
OBJECT: C141 ENGINE

UNITS: mg/M3
OSHA TWA:205 mg/M3

GRID MDL: 0.0095 mg/SAMPLE
PAINTER MDL: 0.0095 mg/SAMPLE

EXHAUST DUCT: 18.8
RECIRC DUCT: 18.3

TEST: ORGANICS #6
DATE: 06-30-92 PM
METHOD: NIOSH 1300

TRAVIS AFB
PAINT BOOTH TESTS
ACUREX PROJECT 8485

D E INITIALS:BN & LJL
Q A INITIALS:LJL

GRID CHART 3 - TOLUENE

Painter Over
no sample

Painter Under
5.9

INLET GRID A

1A
1.0

2A
0.5
no sample

3A
0.7

EXHAUST GRID

1 0.7	2 0.8	3 1.2 0.8	4 0.6
5 0.8	6 0.8	7 0.7	8 0.5
9 0.7	10 0.9	11 1.1 1.0	12 1.3
21 0.7	22 0.4 0.6	23 1.3	24 2.1
13 0.8	14 0.9	15 1.1	16 0.7
17 0.9	18 no sample	19 0.7	20 1.1

Field Blank
1.9

INLET GRID B

1B
1.0

2B
1.0

3B
0.7

PAINT TYPE: GUNSHIP GRAY TOPCOAT
OBJECT: C141 ENGINE

UNITS: mg/M3
OSHA TWA:375 mg/M3

GRID MDL: 0.0114 mg/SAMPLE
PAINTER MDL: 0.0114 mg/SAMPLE

EXHAUST DUCT: 0.8
RECIRC DUCT: 0.9

TEST: ORGANICS #6
DATE: 06-30-92 PM
METHOD: NIOSH 1300

TRAVIS AFB
PAINT BOOTH TESTS
ACUREX PROJECT 8485

D E INITIALS:BN & LJL
Q A INITIALS:LJL

GRID CHART 4 - BUTYL ACETATE

Painter Over
no sample

Painter Under
0.5

EXHAUST GRID

1 3.6	2 3.9	3 3.6 4.1	4 2.9
5 4.4	6 4.8	7 4.4	8 4.3
9 4.0	10 5.4	11 9.9 9.3	12 4.0
21 4.3	22 4.9 4.6	23 6.3	24 4.8
13 3.9	14 6.2	15 11.1	16 3.8
17 3.4	18 no sample	19 5.0	20 3.3

Field Blank
< MDL

INLET GRID A

1A
3.2

2A
2.7
no sample

3A
2.6

INLET GRID B

1B
3.0

2B
3.4

3B
2.5

PAINT TYPE: GUNSHIP GRAY TOPCOAT
OBJECT: C141 ENGINE

UNITS: mg/M3
OSHA TWA:710 mg/M3

GRID MDL: 0.0116 mg/SAMPLE
PAINTER MDL: 0.0116 mg/SAMPLE

EXHAUST DUCT: 5.5
RECIRC DUCT: 5.3

TEST: ORGANICS #6
DATE: 06-30-92 PM
METHOD: NIOSH 1300

TRAVIS AFB
PAINT BOOTH TESTS
ACUREX PROJECT 8485

D E INITIALS:BN & LJL
Q A INITIALS:LJL

GRID CHART 5 - ETHYL BENZENE

Painter Over
no sample

Painter Under
< MDL

INLET GRID A

1A
< MDL

2A
< MDL
no sample

3A
< MDL

EXHAUST GRID

1 < MDL	2 < MDL	3 < MDL 0.2	4 < MDL
5 < MDL	6 < MDL	7 0.2	8 0.2
9 < MDL	10 0.2	11 0.5 0.4	12 < MDL
21 < MDL	22 0.2 0.2	23 < MDL	24 < MDL
13 0.2	14 0.3	15 0.5	16 0.2
17 < MDL	18 no sample	19 0.2	20 < MDL

Field Blank
< MDL

INLET GRID B

1B
< MDL

2B
0.3

3B
0.2

PAINT TYPE: GUNSHIP GRAY TOPCOAT
OBJECT: C141 ENGINE

UNITS: mg/M3
OSHA TWA:435 mg/M3

GRID MDL: 0.0117 mg/SAMPLE
PAINTER MDL: 0.0117 mg/SAMPLE

EXHAUST DUCT: 0.2
RECIRC DUCT: < MDL

TEST: ORGANICS #6
DATE: 06-30-92 PM
METHOD: NIOSH 1300

TRAVIS AFB
PAINT BOOTH TESTS
ACUREX PROJECT 8485

D E INITIALS:BN & LJL
Q A INITIALS:LJL

GRID CHART 6 - XYLENES

Painter Over
no sample

Painter Under
< MDL

EXHAUST GRID

1 0.9	2 0.9	3 0.9 1.1	4 0.7
5 1.1	6 1.1	7 1.0	8 1.0
9 1.0	10 1.3	11 2.3 2.2	12 1.0
21 1.1	22 1.2 1.0	23 1.7	24 < MDL
13 1.0	14 1.5	15 2.5	16 0.8
17 0.9	18 no sample	19 0.8	20 0.7

Field Blank
< MDL

INLET GRID A

1A
0.8

2A
0.7
no sample

3A
0.7

INLET GRID B

1B
0.8

2B
0.7

3B
0.6

PAINT TYPE: GUNSHIP GRAY TOPCOAT
OBJECT: C141 ENGINE

UNITS: mg/M3
OSHA TWA:435 mg/M3

GRID MDL: 0.0368 mg/SAMPLE
PAINTER MDL: 0.0368 mg/SAMPLE

EXHAUST DUCT: 1.3
RECIRC DUCT: 1.3

TEST: SINGLE PASS ORGANICS
DATE: 07-01-92 AM1
METHOD: NIOSH 1300

TRAVIS AFB
PAINT BOOTH TESTS
ACUREX PROJECT 8485

PAINT: GUNSHIP GRAY TOPCOAT
OBJECT: C141 ENGINE

GRID LOC	ACUREX TUBE #	ACUREX SAMPLE #	PUMP #	PRE-CAL (ml/min)	POST-CAL (ml/min)	RUN TIME (min)	MEK (ug)	MIBK (ug)	TOLUENE (ug)	BUTYL ACETATE (ug)	ETHYL BENZENE (ug)	XYLENES (ug)
1	321	900389&96	34	1056	1022	67	ND	70	ND	36	ND	ND
2	322	900529&30	33	1051	1036	1	ND	ND	ND	ND	ND	ND
3	297	900799&928	54	1048	1031	67	17	159	17	34	ND	ND
3 DUP	248	901319&8	28	1035	1009	67	17	181	ND	55	ND	ND
4	301	900929&30	18	1034	1018	68	22	135	15	44	ND	ND
5	299	901053&4	42	1022	1004	67	13	148	ND	51	ND	ND
6	303	901055&6	11	997	1010	68	19	297	ND	104	ND	ND
7	296	901057&8	13	1005	1021	66	26	379	ND	125	ND	29
8	290	901059&60	47	997	985	68	24	231	ND	79	ND	ND
9	305	901286&7	30	1043	1051	0	ND	ND	13	ND	ND	ND
10	291	901288&9	31	1052	1021	67	23	312	ND	99	ND	ND
11	292	901290&1	17	991	971	67	47	896	24	321	13	87
11 DUP	293	901320&1	35	1068	1051	67	46	1053	26	372	15	94
12	312	901292&3	50	1029	1007	68	37	320	ND	108	ND	ND
21	244	901310&1	29	986	972	1	ND	ND	ND	ND	ND	ND
22	294	901312&3	19	1005	970	67	19	291	16	93	ND	ND
22 DUP	302	901322&3	7	1034	1048	68	19	301	ND	103	ND	ND
23	64	901314&5	10	1014	957	68	39	958	26	363	15	99
24	320	901316&7	51	1001	1010	68	31	333	ND	110	ND	ND
13	315	901294&5	24	1032	1020	67	ND	96	27	ND	ND	ND
14	306	901296&7	20	1007	997	67	20	370	16	112	ND	26
15	300	901298&9	53	1029	1023	67	63	841	ND	267	11	67
15 DUP	307	901324&5	12	1029	1042	68	58	986	13	323	14	190
16	308	901300&1	43	1063	1034	68	27	231	ND	69	ND	ND
17	289	901302&3	45	1006	1032	67	ND	82	33	ND	ND	ND
18	323	901304&5	15	1025	1052	68	36	231	ND	65	ND	ND
19	298	901306&7	5	1004	963	68	258	353	ND	87	ND	ND
20	309	901308&9	55	1053	1032	67	65	176	ND	55	ND	ND
P over	313	900327&8	49	1007	989	67	28	215	27	129	15	17
P under	253F	900329	52	1020	970	67	ND	ND	35	30	15	ND
1A	311	900349&62	36	1012	1025	67	ND	ND	ND	ND	ND	ND
2A	281F	900363	39	1006	1044	67	ND	ND	ND	ND	ND	ND
3A	280F	900364	32	1033	1043	67	ND	ND	ND	ND	ND	ND
1B	295	900365&82	16	958	1001	67	ND	ND	ND	ND	ND	ND
2B	88F	900383	6	1036	1020	67	ND	ND	ND	ND	ND	ND
3B	318	900384&5	1	997	964	68	ND	ND	ND	ND	ND	ND
F BLANK												
EXHAUST	304	900287&308	37	1029	1014	63	20	222	13	74	ND	ND
SPLIT	310	900309&26	38	1020	993	60	18	221	ND	74	ND	ND

TEST: SINGLE PASS ORGANICS
DATE: 07-01-92 AM1
METHOD: NIOSH 1300

D E INITIALS: BN & LJL
Q A INITIALS: LJL

GRID LOC	ACUREX TUBE #	ACUREX SAMPLE #	AVG FLOW (L/MIN)	MEK (mg/M3)	MIBK (mg/M3)	TOLUENE (mg/M3)	BUTYL ACETATE (mg/M3)	ETHYL BENZENE (mg/M3)	XYLENES (mg/M3)
1	321	900389&96	1.039	< MDL	1.0	< MDL	0.5	< MDL	< MDL
2	322	900529&30	1.0435	< MDL	< MDL	< MDL	< MDL	< MDL	< MDL
3	297	900799&928	1.0395	0.2	2.3	0.2	0.5	< MDL	< MDL
3 DUP	248	901319&8	1.022	0.2	2.6	< MDL	0.8	< MDL	< MDL
4	301	900929&30	1.026	0.3	1.9	0.2	0.6	< MDL	< MDL
5	299	901053&4	1.013	0.2	2.2	< MDL	0.8	< MDL	< MDL
6	303	901055&6	1.0035	0.3	4.4	< MDL	1.5	< MDL	< MDL
7	296	901057&8	1.013	0.4	5.7	< MDL	1.9	< MDL	0.4
8	290	901059&60	0.991	0.4	3.4	< MDL	1.2	< MDL	< MDL
9	305	901286&7	1.047	no sample	no sample	no sample	no sample	no sample	no sample
10	291	901288&9	1.0365	0.3	4.5	< MDL	1.4	< MDL	< MDL
11	292	901290&1	0.981	0.7	13.6	0.4	4.9	0.2	1.3
11 DUP	293	901320&1	1.0595	0.6	14.8	0.4	5.2	0.2	1.3
12	312	901292&3	1.018	0.5	4.6	< MDL	1.6	< MDL	< MDL
21	244	901310&1	0.979	< MDL	< MDL	< MDL	< MDL	< MDL	< MDL
22	294	901312&3	0.9875	0.3	4.4	0.2	1.4	< MDL	< MDL
22 DUP	302	901322&3	1.041	0.3	4.3	< MDL	1.5	< MDL	< MDL
23	64	901314&5	0.9855	0.6	14.3	0.4	5.4	0.2	1.5
24	320	901316&7	1.0055	0.5	4.9	< MDL	1.6	< MDL	< MDL
13	315	901294&5	1.026	< MDL	1.4	0.4	< MDL	< MDL	< MDL
14	306	901296&7	1.002	0.3	5.5	0.2	1.7	< MDL	0.4
15	300	901298&9	1.026	0.9	12.2	< MDL	3.9	0.2	1.0
15 DUP	307	901324&5	1.0355	0.8	14.0	0.2	4.6	0.2	2.7
16	308	901300&1	1.0485	0.4	3.2	< MDL	1.0	< MDL	< MDL
17	289	901302&3	1.019	< MDL	1.2	0.5	< MDL	< MDL	< MDL
18	323	901304&5	1.0385	0.5	3.3	< MDL	0.9	< MDL	< MDL
19	298	901306&7	0.9835	3.9	5.3	< MDL	1.3	< MDL	< MDL
20	309	901308&9	1.0425	0.9	2.5	< MDL	0.8	< MDL	< MDL
P over	313	900327&8	0.998	0.4	3.2	0.4	1.9	0.2	0.3
P under	253F	900329	0.995	< MDL	< MDL	0.5	0.5	0.2	< MDL
1A	311	900349&62	1.0185	< MDL	< MDL	< MDL	< MDL	< MDL	< MDL
2A	281F	900363	1.025	< MDL	< MDL	< MDL	< MDL	< MDL	< MDL
3A	280F	900364	1.038	< MDL	< MDL	< MDL	< MDL	< MDL	< MDL
1B	295	900365&82	0.9795	< MDL	< MDL	< MDL	< MDL	< MDL	< MDL
2B	88F	900383	1.028	< MDL	< MDL	< MDL	< MDL	< MDL	< MDL
3B	318	900384&5	0.9805	< MDL	< MDL	< MDL	< MDL	< MDL	< MDL
F BLANK			0	no sample	no sample	no sample	no sample	no sample	no sample
EXHAUST	304	900287&308	1.0215	0.3	3.4	0.2	1.1	< MDL	< MDL
SPLIT	310	900309&26	1.0065	0.3	3.7	< MDL	1.2	< MDL	< MDL

TEST: S.P. ORGANICS
DATE: 07-01-92 AM1
METHOD: NIOSH 1300

TRAVIS AFB
PAINT BOOTH TESTS
ACUREX PROJECT 8485

D E INITIALS:BN & LJL
Q A INITIALS:LJL

GRID CHART 1 - MEK

Painter Over
0.4

Painter Under
< MDL

EXHAUST GRID

1 < MDL	2 < MDL	3 0.2 0.2	4 0.3
5 0.2	6 0.3	7 0.4	8 0.4
9 no sample	10 0.3	11 0.7 0.6	12 0.5
21 < MDL	22 0.3 0.3	23 0.6	24 0.5
13 < MDL	14 0.3	15 0.9 0.8	16 0.4
17 < MDL	18 0.5	19 3.9	20 0.9

Field Blank
no sample

INLET GRID A

1A
< MDL

2A
< MDL

3A
< MDL

INLET GRID B

1B
< MDL

2B
< MDL

3B
< MDL

PAINT TYPE:GUNSHIP GRAY TOPCOAT UNITS: mg/M3 GRID MDL: 0.0115 mg/SAMPLE EXHAUST DUCT: 0.3

OBJECT: C141 ENGINE OSHA TWA:590 mg/M3 PAINTER MDL: 0.0115 mg/SAMPLE SINGLE PASS DUCT: 0.3

TEST: S.P. ORGANICS
DATE: 07-01-92 AM1
METHOD: NIOSH 1300

TRAVIS AFB
PAINT BOOTH TESTS
ACUREX PROJECT 8485

D E INITIALS:BN & LJL
Q A INITIALS:LJL

GRID CHART 2 - MIBK

Painter Over
3.2

Painter Under
< MDL

EXHAUST GRID

1 1.0	2 < MDL	3 2.3 2.6	4 1.9
5 2.2	6 4.4	7 5.7	8 3.4
9 no sample	10 4.5	11 13.6 14.8	12 4.6
21 < MDL	22 4.4 4.3	23 14.3	24 4.9
13 1.4	14 5.5	15 12.2 14.0	16 3.2
17 1.2	18 3.3	19 5.3	20 2.5

Field Blank
no sample

INLET GRID A

1A
< MDL

2A
< MDL

3A
< MDL

INLET GRID B

1B
< MDL

2B
< MDL

3B
< MDL

PAINT TYPE:GUNSHIP GRAY TOPCOAT UNITS: mg/M3 GRID MDL: 0.0095 mg/SAMPLE EXHAUST DUCT: 3.4

OBJECT: C141 ENGINE OSHA TWA:205 mg/M3 PAINTER MDL: 0.0095 mg/SAMPLE SINGLE PASS DUCT: 3.7

TEST: S.P. ORGANICS
DATE: 07-01-92 AM1
METHOD: NIOSH 1300

TRAVIS AFB
PAINT BOOTH TESTS
ACUREX PROJECT 8485

D E INITIALS:BN & LJL
Q A INITIALS:LJL

GRID CHART 3 - TOLUENE

Painter Over
0.4

Painter Under
0.5

INLET GRID A

1A
< MDL

2A
< MDL

3A
< MDL

EXHAUST GRID

1 < MDL	2 < MDL	3 0.2 < MDL	4 0.2
5 < MDL	6 < MDL	7 < MDL	8 < MDL
9 no sample	10 < MDL	11 0.4 0.4	12 < MDL
21 < MDL	22 0.2 < MDL	23 0.4	24 < MDL
13 0.4	14 0.2	15 < MDL 0.2	16 < MDL
17 0.5	18 < MDL	19 < MDL	20 < MDL

Field Blank
no sample

INLET GRID B

1B
< MDL

2B
< MDL

3B
< MDL

PAINT TYPE:GUNSHIP GRAY TOPCOAT UNITS: mg/M3 GRID MDL: 0.0114 mg/SAMPLE EXHAUST DUCT: 0.2

OBJECT: C141 ENGINE OSHA TWA:375 mg/M3 PAINTER MDL: 0.0114 mg/SAMPLE SINGLE PASS DUCT: < MDL

TEST: S.P. ORGANICS
DATE: 07-01-92 AM1
METHOD: NIOSH 1300

TRAVIS AFB
PAINT BOOTH TESTS
ACUREX PROJECT 8485

D E INITIALS:BN & LJL
Q A INITIALS:LJL

GRID CHART 4 - BUTYL ACETATE

Painter Over
1.9

Painter Under
0.5

INLET GRID A

1A
< MDL

2A
< MDL

3A
< MDL

EXHAUST GRID

1 0.5	2 < MDL	3 0.5 0.8	4 0.6
5 0.8	6 1.5	7 1.9	8 1.2
9 no sample	10 1.4	11 4.9 5.2	12 1.6
21 < MDL	22 1.4 1.5	23 5.4	24 1.6
13 < MDL	14 1.7	15 3.9 4.6	16 1.0
17 < MDL	18 0.9	19 1.3	20 0.8

Field Blank
no sample

INLET GRID B

1B
< MDL

2B
< MDL

3B
< MDL

PAINT TYPE:GUNSHIP GRAY TOPCOAT UNITS: mg/M3 GRID MDL: 0.0116 mg/SAMPLE EXHAUST DUCT: 1.1

OBJECT: C141 ENGINE OSHA TWA:710 mg/M3 PAINTER MDL: 0.0116 mg/SAMPLE SINGLE PASS DUCT: 1.2

TEST: S.P. ORGANICS
DATE: 07-01-92 AM1
METHOD: NIOSH 1300

TRAVIS AFB
PAINT BOOTH TESTS
ACUREX PROJECT 8485

D E INITIALS:BN & LJL
Q A INITIALS:LJL

GRID CHART 5 - ETHYL BENZENE

Painter Over
0.2

Painter Under
0.2

EXHAUST GRID

1 < MDL	2 < MDL	3 < MDL < MDL	4 < MDL
5 < MDL	6 < MDL	7 < MDL	8 < MDL
9 no sample	10 < MDL	11 0.2 0.2	12 < MDL
21 < MDL	22 < MDL < MDL	23 0.2	24 < MDL
13 < MDL	14 < MDL	15 0.2 0.2	16 < MDL
17 < MDL	18 < MDL	19 < MDL	20 < MDL

Field Blank
no sample

INLET GRID A

1A
< MDL

2A
< MDL

3A
< MDL

INLET GRID B

1B
< MDL

2B
< MDL

3B
< MDL

PAINT TYPE:GUNSHIP GRAY TOPCOAT UNITS: mg/M3 GRID MDL: 0.0117 mg/SAMPLE EXHAUST DUCT: < MDL

OBJECT: C141 ENGINE OSHA TWA:435 mg/M3 PAINTER MDL: 0.0117 mg/SAMPLE SINGLE PASS DUCT: < MDL

TEST: S.P. ORGANICS
DATE: 07-01-92 AM1
METHOD: NIOSH 1300

TRAVIS AFB
PAINT BOOTH TESTS
ACUREX PROJECT 8485

D E INITIALS:BN & LJL
Q A INITIALS:LJL

GRID CHART 6 - XYLENES

Painter Over
0.3

Painter Under
< MDL

EXHAUST GRID

1 < MDL	2 < MDL	3 < MDL < MDL	4 < MDL
5 < MDL	6 < MDL	7 0.4	8 < MDL
9 no sample	10 < MDL	11 1.3 1.3	12 < MDL
21 < MDL	22 < MDL < MDL	23 1.5	24 < MDL
13 < MDL	14 0.4	15 1.0 2.7	16 < MDL
17 < MDL	18 < MDL	19 < MDL	20 < MDL

Field Blank
no sample

INLET GRID A

1A
< MDL

2A
< MDL

3A
< MDL

INLET GRID B

1B
< MDL

2B
< MDL

3B
< MDL

PAINT TYPE:GUNSHIP GRAY TOPCOAT UNITS: mg/M3 GRID MDL: 0.0368 mg/SAMPLE EXHAUST DUCT: < MDL

OBJECT: C141 ENGINE OSHA TWA:435 mg/M3 PAINTER MDL: 0.0368 mg/SAMPLE SINGLE PASS DUCT: < MDL

TEST: PARTICULATE #1
DATE: 06-19-92 AM
METHOD: NIOSH 500

TRAVIS AFB
PAINT BOOTH TESTS
ACUREX PROJECT 8485

PAINT: WHITE TOPCOAT
OBJECT: LADDERS

D E INITIALS: BN & LJL
Q A INITIALS: LJL

(RAW DATA, BALANCE ACCURACY 0.0001)

GRID LOC	ACUREX SAMPLE #	FILTER #	PUMP #	PRE-CAL (ml/min)	POST-CAL (ml/min)	RUN TIME (min)	PRE #1 (g)	PRE #2 (g)	POST #1 (g)	POST #2 (g)	AVG FLOW (L/MIN)	PRE AVG (g)	POST AVG (g)	PART WT (g)	PARTICULATE (mg/M3)
1	900077	33	29	3024	2988	42	0.0132	0.0132	0.0132	0.0132	3.006	0.0132	0.0132	0.0000	< MDL
2	900078	162	4	3072	3017	42	0.0128	0.0127	0.0127	0.0127	3.045	0.0128	0.0127	0.0000	< MDL
3	900079	88	24	3024	3113	42	0.0116	0.0116	0.0116	0.0116	3.069	0.0116	0.0116	0.0000	< MDL
4	900080	24	20	3085	3066	41	0.0118	0.0118	0.0118	0.0118	3.076	0.0118	0.0118	0.0000	< MDL
5	900081	16	35	3045	3000	42	0.0125	0.0125	0.0126	0.0126	3.023	0.0125	0.0126	0.0001	0.8
6	900082	94	2	3042	3126	32	0.0130	0.0130	0.0132	0.0132	3.084	0.0130	0.0132	0.0002	2.0
7	900083	92	19	3075	3012	41	0.0126	0.0126	0.0126	0.0125	3.044	0.0126	0.0125	0.0000	< MDL
8	900084	71	7	3066	3048	42	0.0121	0.0121	0.0120	0.0121	3.057	0.0121	0.0120	0.0000	< MDL
9	900085	67	32	3057	2962	42	0.0119	0.0120	0.0125	0.0125	3.010	0.0119	0.0125	0.0006	4.7
10	900086	133	30	3079	3003	42	0.0128	0.0128	0.0129	0.0130	3.041	0.0128	0.0130	0.0002	1.6
11	900087	134	26	3069	2962	42	0.0132	0.0131	0.0131	0.0131	3.016	0.0131	0.0131	0.0000	< MDL
12	900088	151	12	3027	3088	42	0.0132	0.0132	0.0132	0.0132	3.058	0.0132	0.0132	0.0000	< MDL
21	900089	84	34	3015	2991	41	0.0128	0.0128	0.0135	0.0134	3.003	0.0128	0.0134	0.0006	4.9
22	900090	31	22	3003	3135	37	0.0133	0.0133	0.0135	0.0135	3.069	0.0133	0.0135	0.0002	1.8
23	900091	116	18	3054	3045	41	0.0125	0.0125	0.0125	0.0126	3.050	0.0125	0.0125	0.0000	< MDL
24	900092	28	9	3018	3027	44	0.0125	0.0124	0.0124	0.0125	3.023	0.0125	0.0124	0.0000	< MDL
13	900093	17	31	3091	3045	41	0.0125	0.0125	0.0136	0.0136	3.068	0.0125	0.0136	0.0011	8.7
13 DUP	900094	2	23	3075	3129	42	0.0126	0.0125	0.0135	0.0136	3.102	0.0125	0.0135	0.0010	7.7
14	900095	22	6	3036	3036	42	0.0136	0.0135	0.0140	0.0140	3.036	0.0135	0.0140	0.0005	3.9
15	900096	5	5	3057	3036	42	0.0125	0.0124	0.0126	0.0125	3.047	0.0124	0.0125	0.0001	0.8
16	900097	6	8	3082	3054	42	0.0115	0.0115	0.0115	0.0115	3.068	0.0115	0.0115	0.0000	< MDL
17	900098	40	33	3066	3039	42	0.0132	0.0131	0.0143	0.0143	3.053	0.0132	0.0143	0.0011	8.6
18	900099	102	36	3048	3060	42	0.0132	0.0133	0.0142	0.0142	3.054	0.0133	0.0142	0.0009	7.0
18 DUP	900100	21	1	3048	3018	43	0.0123	0.0123	0.0126	0.0126	3.033	0.0123	0.0126	0.0003	2.3
19	900101	69	25	3003	3060	42	0.0115	0.0116	0.0120	0.0119	3.032	0.0115	0.0119	0.0004	3.1
20	900102	85	11	3048	3122	42	0.0125	0.0124	0.0125	0.0126	3.085	0.0124	0.0126	0.0002	1.5
P over	900137	203	28	3069	3006	41	0.0120	0.0120	0.0171	0.0170	3.038	0.0120	0.0171	0.0051	41.0
P under	900136	152	21	3042	3000	41	0.0128	0.0128	0.0128	0.0128	3.021	0.0128	0.0128	0.0000	< MDL
1A	900071	160	14	3054	3107	42	0.0122	0.0122	0.0122	0.0122	3.081	0.0122	0.0122	0.0000	< MDL
2A	900072	185	15	3027	3018	42	0.0118	0.0118	0.0118	0.0119	3.023	0.0118	0.0118	0.0000	< MDL
3A	900073	9	10	3006	2983	42	0.0119	0.0120	0.0119	0.0120	2.995	0.0120	0.0120	0.0000	< MDL
1B	900074	53	3	3045	3024	41	0.0117	0.0117	0.0117	0.0118	3.035	0.0117	0.0117	0.0000	< MDL
2B	900075	157	13	3054	3048	41	0.0132	0.0133	0.0132	0.0132	3.051	0.0132	0.0132	0.0000	< MDL
3B	900076	82	27	3024	3012	41	0.0124	0.0124	0.0123	0.0124	3.018	0.0124	0.0123	0.0000	< MDL
EXHAUST											0	0	0	0.00000	no sample
RECIRC											0	0	0	0.00000	no sample

TEST: PARTICULATE #1
DATE: 06-19-92 AM
METHOD: NIOSH 500

TRAVIS AFB
PAINT BOOTH TESTS
ACUREX PROJECT 8485

D E INITIALS: BN & LJL
Q A INITIALS: LJL

GRID CHART - PARTICULATE

Painter Over
41.0

Painter Under
< MDL

INLET GRID A

1A
< MDL

2A
< MDL

3A
< MDL

EXHAUST GRID

1 < MDL	2 < MDL	3 < MDL	4 < MDL
5 0.8	6 2.0	7 < MDL	8 < MDL
9 4.7	10 1.6	11 < MDL	12 < MDL
21 4.9	22 1.8	23 < MDL	24 < MDL
13 8.7 7.7	14 3.9	15 0.8	16 < MDL
17 8.6	18 7.0 2.3	19 3.1	20 1.5

INLET GRID B

1B
< MDL

2B
< MDL

3B
< MDL

PAINT TYPE: WHITE TOPCOAT
OBJECT: LADDERS

UNITS: mg/M3
OSHA TWA: 40 mg/M3

GRID MDL: 0.1 mg/SAMPLE
PAINTER MDL: 0.1 mg/SAMPLE

EXHAUST DUCT:no sample
RECIRC DUCT:no sample

TEST: PARTICULATE #2
DATE: 06-19-92 PM
METHOD: NIOSH 500

TRAVIS AFB
PAINT BOOTH TESTS
ACUREX PROJECT 8485

PAINT: LT GREEN PRIMER
OBJECT: BOWSER

D E INITIALS: BN & LJL
Q A INITIALS: LJL

GRID LOC	ACUREX SAMPLE #	FILTER #	PUMP #	PRE-CAL (ml/min)	POST-CAL (ml/min)	RUN TIME (min)	PRE #1 (g)	PRE #2 (g)	POST #1 (g)	POST #2 (g)	AVG FLOW (L/MIN)	PRE AVG (g)	POST AVG (g)	PART WT (g)	PARTICULA (mg/M3)
1	900109	26	33	3039	3024	38	0.0123	0.0123	0.0122	0.0123	3.032	0.0123	0.0122	0.0000	< MDL
2	900110	124	36	3060	3094	38	0.0123	0.0122	0.0123	0.0122	3.077	0.0122	0.0122	0.0000	< MDL
3	900111	173	25	3060	3129	38	0.0122	0.0122	0.0121	0.0122	3.095	0.0122	0.0122	0.0000	< MDL
4	900112	70	20	3066	3051	38	0.0117	0.0117	0.0118	0.0117	3.059	0.0117	0.0117	0.0000	< MDL
5	900113	153	16	3063	3142	38	0.0134	0.0133	0.0134	0.0134	3.103	0.0134	0.0134	0.0000	< MDL
6	900114	61	1	3018	3033	39	0.0115	0.0115	0.0116	0.0116	3.026	0.0115	0.0116	0.0001	0.8
7	900115	184	24	3045	3148	38	0.0128	0.0128	0.0129	0.0129	3.097	0.0128	0.0129	0.0001	0.8
8	900116	3	12	3088	3164	38	0.0131	0.0131	0.0133	0.0133	3.126	0.0131	0.0133	0.0002	1.7
9	900117	77	29	3021	3012	38	0.0116	0.0116	0.0118	0.0118	3.017	0.0116	0.0118	0.0002	1.7
10	900118	90	4	3085	3057	38	0.0115	0.0115	0.0123	0.0123	3.071	0.0115	0.0123	0.0008	6.9
11	900119	178	22	3088	3216	34	0.0131	0.0131	0.0139	0.0138	3.152	0.0131	0.0139	0.0008	7.5
12	900120	206	13	3048	3714	37	0.0119	0.0119	0.0126	0.0126	3.381	0.0119	0.0126	0.0007	5.6
21	900121	201	32	3018	3003	38	0.0136	0.0136	0.0140	0.0139	3.011	0.0136	0.0139	0.0003	2.6
22	900122	207	6	3036	3027	38	0.0121	0.0120	0.0129	0.0128	3.032	0.0121	0.0129	0.0008	6.9
23	900123	51	18	3045	3021	38	0.0126	0.0126	0.0138	0.0138	3.033	0.0126	0.0138	0.0012	10.4
23 DUP	900134	98	5	3036	3024	39	0.0115	0.0115	0.0124	0.0124	3.030	0.0115	0.0124	0.0009	7.6
24	900124	164	14	3039	3085	38	0.0127	0.0128	0.0136	0.0136	3.062	0.0128	0.0136	0.0008	6.9
13	900125	200	31	3045	3003	38	0.0125	0.0125	0.0127	0.0127	3.024	0.0125	0.0127	0.0002	1.7
14	900126	30	30	3003	3006	38	0.0124	0.0124	0.0133	0.0133	3.005	0.0124	0.0133	0.0009	7.9
15	900127	59	19	3012	3009	38	0.0134	0.0134	0.0144	0.0143	3.011	0.0134	0.0143	0.0009	7.9
16	900128	57	9	3027	3027	40	0.0135	0.0135	0.0145	0.0145	3.027	0.0135	0.0145	0.0010	8.3
17	900129	129	35	3000	2994	38	0.0138	0.0138	0.0139	0.0139	2.997	0.0138	0.0139	0.0001	0.9
18	900130	136	34	3003	2977	38	0.0122	0.0122	0.0125	0.0125	2.990	0.0122	0.0125	0.0003	2.6
19	900131	183	26	3057	3051	5	0.0120	0.0119	0.0119	0.0120	3.054	0.0119	0.0120	0.0001	6.5
20	900132	65	11	3039	3088	39	0.0125	0.0124	0.0136	0.0137	3.064	0.0124	0.0136	0.0012	10.0
P over	900138	195	28	3006	3024	37	0.0131	0.0131	0.0133	0.0132	3.015	0.0131	0.0132	0.0001	0.9
P under	900139	43	21	3000	2985	37	0.0122	0.0121	0.0121	0.0121	2.993	0.0121	0.0121	0.0000	< MDL
1A	900103	93	3	3024	3003	41	0.0125	0.0125	0.0125	0.0125	3.014	0.0125	0.0125	0.0000	< MDL
2A	900104	80	10	3030	3126	42	0.0116	0.0116	0.0116	0.0116	3.078	0.0116	0.0116	0.0000	< MDL
2A DUP	900133	62	23	3085	3174	37	0.0125	0.0125	0.0124	0.0124	3.130	0.0125	0.0124	0.0000	< MDL
3A	900105	39	7	3048	3132	39	0.0126	0.0125	0.0126	0.0125	3.090	0.0125	0.0125	0.0000	< MDL
1B	900106	38	8	3045	3082	42	0.0135	0.0134	0.0136	0.0134	3.064	0.0135	0.0135	0.0000	< MDL
2B	900107	45	15	3018	3129	45	0.0124	0.0124	0.0124	0.0123	3.074	0.0124	0.0123	0.0000	< MDL
3B	900108	180	27	3012	2994	41	0.0121	0.0121	0.0130	0.0130	3.003	0.0121	0.0130	0.0009	7.3
F BLANK	900135	163	2			38	0.0132	0.0132	0.0132	0.0131	3.000	0.0132	0.0131	0.0000	< MDL
EXHAUST											0.000	0.0000	0.0000	0.0000	no sample
RECIRC											0.000	0.0000	0.0000	0.0000	no sample

TEST: PARTICULATE #2
DATE: 06-19-92 PM
METHOD: NIOSH 500

TRAVIS AFB
PAINT BOOTH TESTS
ACUREX PROJECT 8485

D E INITIALS: BN & LJL
Q A INITIALS: LJL

GRID CHART - PARTICULATE

Painter Over
0.9

Painter Under
< MDL

INLET GRID A

1A
< MDL

2A
< MDL
< MDL

3A
< MDL

EXHAUST GRID

1 < MDL	2 < MDL	3 < MDL	4 < MDL
5 < MDL	6 0.8	7 0.8	8 1.7
9 1.7	10 6.9	11 7.5	12 5.6
21 2.6	22 6.9	23 10.4 7.6	24 6.9
13 1.7	14 7.9	15 7.9	16 8.3
17 0.9	18 2.6	19 6.5	20 10.0

Field Blank
< MDL

INLET GRID B

1B
< MDL

2B
< MDL

3B
7.3

PAINT TYPE: LT GREEN PRIMER
OBJECT: BOWSER

UNITS: mg/M3
OSHA TWA: ?? mg/M3

GRID MDL: 0.1 mg/SAMPLE
PAINTER MDL: 0.1 mg/SAMPLE

EXHAUST DUCT:no sample
RECIRC DUCT:no sample

TEST: PARTICULATE #3
DATE: 06-22-92 AM
METHOD: NIOSH 500

TRAVIS AFB
PAINT BOOTH TESTS
ACUREX PROJECT 8485

PAINT: RED H2OBASE & WHITE TOPCOAT
OBJECT: BOWSER & LADDERS

D E INITIALS: BN & LJL
Q A INITIALS: LJL

GRID LOC	ACUREX SAMPLE #	FILTER #	PUMP #	PRE-CAL (ml/min)	POST-CAL (ml/min)	RUN TIME (min)	PRE #1 (g)	PRE #2 (g)	POST #1 (g)	POST #2 (g)	AVG FLOW (L/MIN)	PRE AVG (g)	POST AVG (g)	PART WT (g)	PARTICULATE (mg/M3)
1	900008	63	8	3030	2980	70	0.0126	0.0126	0.0126	0.0127	3.005	0.0126	0.0126	0.0000	< MDL
2	900009	148	6	3048	3021	72	0.0124	0.0123	0.0123	0.0123	3.035	0.0123	0.0123	0.0000	< MDL
3	900010	12	25	3012	3075	71	0.0133	0.0133	0.0134	0.0134	3.044	0.0133	0.0134	0.0001	0.5
4	900011	11	1	3015	3066	73	0.0125	0.0125	0.0127	0.0127	3.041	0.0125	0.0127	0.0002	0.9
5	900012	73	41	3060	3045	72	0.0124	0.0124	0.0125	0.0124	3.053	0.0124	0.0125	0.0001	0.5
6	900013	166	12	3030	3085	72	0.0133	0.0134	0.0133	0.0134	3.058	0.0133	0.0133	0.0000	< MDL
7	900014	195	33	3075	3021	71	0.0131	0.0131	0.0133	0.0132	3.048	0.0131	0.0132	0.0001	0.5
8	900015	76	4	3072	2997	71	0.0127	0.0127	0.0128	0.0128	3.035	0.0127	0.0128	0.0001	0.5
9	900016	1	7	3027	3035	72	0.0132	0.0131	0.0120	0.0120	3.031	0.0132	0.012	0.0000	< MDL
10	900017	109	5	3063	3033	73	0.0122	0.0122	0.0126	0.0126	3.048	0.0122	0.0126	0.0004	1.8
11	900018	192	14	3039	2988	72	0.0139	0.0130	0.0140	0.0139	3.014	0.0135	0.0139	0.0004	1.8
12	900018	105	2	3066	3012	55	0.0134	0.0135	0.0139	0.0139	3.039	0.0134	0.0139	0.0005	3.0
21	900020	58	10	3027	3091	73	0.0122	0.0122	0.0124	0.0124	3.059	0.0122	0.0124	0.0002	0.9
22	900021	115	26	3066	3119	1	0.0123	0.0123	0.0123	0.0122	3.093	0.0123	0.0122	0.0000	< MDL
23	900022	8	30	3027	2983	72	0.0117	0.0117	0.0129	0.0130	3.005	0.0117	0.0129	0.0012	5.5
23 DUP	900032	132	22	3204	3204	62	0.0136	0.0135	0.0142	0.0142	3.204	0.0135	0.0142	0.0007	3.5
24	900023	36	24	3027	3066	72	0.0135	0.0134	0.0144	0.0144	3.047	0.0135	0.0144	0.0009	4.1
13	900024	215	31	3066	3000	72	0.0130	0.0130	0.0135	0.0135	3.033	0.013	0.0135	0.0005	2.3
14	900025	27	9	3049	3000	75	0.0134	0.0134	0.0141	0.0141	3.025	0.0134	0.0141	0.0007	3.1
15	900026	14	42	2985	3030	71	0.0134	0.0134	0.0149	0.0149	3.008	0.0134	0.0149	0.0015	7.0
16	900027	74	16	3024	3129	71	0.0127	0.0126	0.0131	0.0131	3.077	0.0127	0.0131	0.0004	1.8
17	900028	46	36	3066	3110	71	0.0132	0.0132	0.0132	0.0133	3.088	0.0132	0.0132	0.0000	< MDL
18	900029	123	11	3045	2974	72	0.0128	0.0128	0.0141	0.0141	3.010	0.0128	0.0141	0.0013	6.0
19	900030	99	23	3030	3151	72	0.0116	0.0116	0.0132	0.0132	3.091	0.0116	0.0132	0.0016	7.2
20	900031	208	43	3045	2954	72	0.0120	0.0120	0.0132	0.0132	3.000	0.012	0.0132	0.0012	5.6
P over	900066	150	21	3051	2400	70	0.0128	0.0128	0.0153	0.0153	2.726	0.0128	0.0153	0.0025	13.1
P under	900067	50	32	3066	2988	70	0.0126	0.0125	0.0126	0.0125	3.027	0.0126	0.0126	0.0000	< MDL
1A	900001	64	13	3060	3097	70	0.0126	0.0126	0.0125	0.0125	3.079	0.0126	0.0125	0.0000	< MDL
2A	900003	144	3	3051	3003	70	0.0131	0.0131	0.0131	0.0131	3.027	0.0131	0.0131	0.0000	< MDL
2A DUP	900007	83	20	3082	3021	70	0.0126	0.0126	0.0126	0.0126	3.052	0.0126	0.0126	0.0000	< MDL
3A	900005	32	27	3039	3012	70	0.0126	0.0125	0.0125	0.0125	3.026	0.0125	0.0125	0.0000	< MDL
1B	900002	199	29	3027	3000	69	0.0130	0.0130	0.0130	0.0129	3.014	0.013	0.013	0.0000	< MDL
2B	900004	41	40	3015	2960	69	0.0126	0.0125	0.0116	0.0116	2.988	0.0125	0.0116	0.0000	< MDL
3B	900006	149	19	3027	2950	69	0.0125	0.0125	0.0125	0.0125	2.989	0.0125	0.0125	0.0000	< MDL
EXHAUST											0.000	0	0	0.0000	no sample
RECIRC											0.000	0	0	0.0000	no sample

TEST: PARTICULATE #3
DATE: 06-22-92 AM
METHOD: NIOSH 500

TRAVIS AFB
PAINT BOOTH TESTS
ACUREX PROJECT 8485

D E INITIALS: BN & LJL
Q A INITIALS: LJL

GRID CHART - PARTICULATE

Painter Over
13.1

Painter Under
< MDL

INLET GRID A

1A
< MDL

2A
< MDL
< MDL

3A
< MDL

EXHAUST GRID

1 < MDL	2 < MDL	3 0.5	4 0.9
5 0.5	6 < MDL	7 0.5	8 0.5
9 < MDL	10 1.8	11 1.8	12 3.0
21 0.9	22 < MDL	23 5.5 3.5	24 4.1
13 2.3	14 3.1	15 7.0	16 1.8
17 < MDL	18 6.0	19 7.2	20 5.6

INLET GRID B

1B
< MDL

2B
< MDL

3B
< MDL

PAINT TYPE: RED H2OBASE & WHITE TOPCOAT UNITS: mg/M3 GRID MDL: 0.1 mg/SAMPLE EXHAUST DUCT:no sample

OBJECT: BOWSER & LADDERS OSHA TWA: ?? mg/M3 PAINTER MDL: 0.1 mg/SAMPLE RECIRC DUCT:no sample

TEST: PARTICULATE #4
DATE: 06-24-92 AM
METHOD: NIOSH 500

TRAVIS AFB
PAINT BOOTH TESTS
ACUREX PROJECT 8485

PAINT: BLUE WATERBASED
OBJECT: COMFORT PALLET

D E INITIALS: BN & LJL
Q A INITIALS: LJL

GRID LOC	ACUREX SAMPLE #	FILTER #	PUMP #	PRE-CAL (ml/min)	POST-CAL (ml/min)	RUN TIME (min)	PRE #1 (g)	PRE #2 (g)	POST #1 (g)	POST #2 (g)	AVG FLOW (L/MIN)	PRE AVG (g)	POST AVG (g)	PART WT (g)	PARTICULA (mg/M3)
1	900040	18	10	3051	3030	70	0.0122	0.0122	0.0122	0.0122	3.041	0.0122	0.0122	0.0000	< MDL
2	900041	165	14	2994	3033	70	0.0132	0.0132	0.0132	0.0132	3.014	0.0132	0.0132	0.0000	< MDL
3	900042	42	2	2975	3003	54	0.0122	0.0121	0.0123	0.0124	2.989	0.0121	0.0124	0.0003	1.9
4	900043	54	17	3051	3042	70	0.0115	0.0115	0.0121	0.0120	3.047	0.0115	0.0121	0.0006	2.8
5	900044	189	22	3009	3069	61	0.0125	0.0125	0.0125	0.0126	3.039	0.0125	0.0125	0.0000	< MDL
6	900045	91	19	3051	3097	70	0.0125	0.0125	0.0127	0.0127	3.074	0.0125	0.0127	0.0002	0.9
7	900046	172	36	3015	3110	70	0.0119	0.0118	0.0129	0.0128	3.063	0.0119	0.0128	0.0009	4.2
8	900047	101	37	3069	3100	70	0.0117	0.0117	0.0127	0.0127	3.085	0.0117	0.0127	0.0010	4.6
9	900048	168	6	3042	3042	70	0.0130	0.0130	0.0134	0.0135	3.042	0.0130	0.0134	0.0004	1.9
9 DUP	900049	86	41	3009	2942	71	0.0130	0.0130	0.0134	0.0134	2.976	0.0130	0.0134	0.0004	1.9
10	900050	210	40	3048	3045	70	0.0123	0.0122	0.0133	0.0133	3.047	0.0122	0.0133	0.0011	5.2
11	900051	56	4	3079	3036	70	0.0126	0.0126	0.0148	0.0149	3.058	0.0126	0.0148	0.0022	10.3
12	900052	154	31	3048	3003	70	0.0133	0.0133	0.0151	0.0150	3.026	0.0133	0.0151	0.0018	8.5
12 DUP	900053	139	33	3045	3063	70	0.0118	0.0118	0.0133	0.0134	3.054	0.0118	0.0133	0.0015	7.0
21	900140	194	34	3051	3036	70	0.0131	0.0130	0.0135	0.0134	3.044	0.0130	0.0135	0.0005	2.3
22	900064	137	30	3003	3006	70	0.0119	0.0119	0.0129	0.0129	3.005	0.0119	0.0129	0.0010	4.8
23	900211	79	16	3027	3072	70	0.0118	0.0118	0.0141	0.0142	3.050	0.0118	0.0142	0.0024	11.2
24	900065	47	11	2997	3045	71	0.0126	0.0125	0.0151	0.0151	3.021	0.0125	0.0151	0.0026	12.1
13	900054	37	15	2997	3006	70	0.0122	0.0122	0.0126	0.0126	3.002	0.0122	0.0126	0.0004	1.9
14	900055	15	21	3027	3030	70	0.0124	0.0124	0.0132	0.0131	3.029	0.0124	0.0132	0.0008	3.8
15	900056	25	24	3000	3039	70	0.0125	0.0124	0.0142	0.0141	3.020	0.0124	0.0141	0.0017	8.0
15 DUP	900057	34	8	3074	3066	71	0.0124	0.0124	0.0139	0.0139	3.070	0.0124	0.0139	0.0015	6.9
16	900058	89	20	3018	3063	70	0.0117	0.0117	0.0135	0.0135	3.041	0.0117	0.0135	0.0018	8.5
17	900059	171	5	3057	3072	71	0.0122	0.0120	0.0123	0.0213	3.065	0.0121	0.0168	0.0047	21.6
18	900060	55	18	3048	3006	70	0.0118	0.0118	0.0124	0.0124	3.027	0.0118	0.0124	0.0006	2.8
18 DUP	900061	100	1	2974	2925	71	0.0121	0.0121	0.0129	0.0129	2.950	0.0121	0.0129	0.0008	3.8
19	900062	96	25	3003	3018	70	0.0122	0.0122	0.0147	0.0147	3.011	0.0122	0.0147	0.0025	11.9
20	900063	126	42	3079	3069	70	0.0124	0.0124	0.0152	0.0152	3.074	0.0124	0.0152	0.0028	13.0
P over	900069	188	28	3006	2991	69	0.0121	0.0121	0.0150	0.0150	2.999	0.0121	0.0150	0.0029	14.0
P under	900070	118	32	3069	3015	69	0.0133	0.0133	0.0132	0.0132	3.042	0.0133	0.0132	0.0000	< MDL
1A	900033	205	7	2988	2945	70	0.0120	0.0121	0.0121	0.0121	2.967	0.0121	0.0121	0.0000	< MDL
2A	900034	97	43	3057	3060	69	0.0117	0.0118	0.0118	0.0118	3.059	0.0117	0.0118	0.0001	0.5
3A	900035	131	3	3039	3000	69	0.0133	0.0133	0.0133	0.0133	3.020	0.0133	0.0133	0.0000	< MDL
1B	900036	19	29	3079	3024	69	0.0123	0.0122	0.0123	0.0123	3.052	0.0123	0.0123	0.0000	< MDL
2B	900037	141	35	3070	3051	69	0.0129	0.0129	0.0129	0.0129	3.061	0.0129	0.0129	0.0000	< MDL
3B	900038	179	27	3051	3036	69	0.0130	0.0130	0.0131	0.0130	3.044	0.0130	0.0130	0.0000	< MDL
3B DUP	900039	186	12	2991	3018	69	0.0121	0.0121	0.0121	0.0120	3.005	0.0121	0.0121	0.0000	< MDL
F BLANK	900068	13	26			69	0.0122	0.0122	0.0122	0.0122	3.000	0.0122	0.0122	0.0000	< MDL
EXHAUST											0	0.0000	0.0000	0.0000	no sample
RECIRC											0	0.0000	0.0000	0.0000	no sample

TEST: PARTICULATE #4
DATE: 06-24-92 AM
METHOD: NIOSH 500

TRAVIS AFB
PAINT BOOTH TESTS
ACUREX PROJECT 8485

D E INITIALS: BN & LJL
Q A INITIALS: LJL

GRID CHART - PARTICULATE

Painter Over
14.0

Painter Under
< MDL

EXHAUST GRID

1 < MDL	2 < MDL	3 1.9	4 2.8
5 < MDL	6 0.9	7 4.2	8 4.6
9 1.9 1.9	10 5.2	11 10.3	12 8.5 7.0
21 2.3	22 4.8	23 11.2	24 12.1
13 1.9	14 3.8	15 8.0 6.9	16 8.5
17 21.6	18 2.8 3.8	19 11.9	20 13.0

Field Blank
< MDL

INLET GRID A

1A
< MDL

2A
0.5

3A
< MDL

INLET GRID B

1B
< MDL

2B
< MDL

3B
< MDL
< MDL

PAINT TYPE: BLUE WATERBASED
OBJECT: COMFORT PALLET

UNITS: mg/M3
OSHA TWA: ?? mg/M3

GRID MDL: 0.1 mg/SAMPLE
PAINTER MDL: 0.1 mg/SAMPLE

EXHAUST DUCT: < MDL
RECIRC DUCT: < MDL

TEST: PARTICULATE #5
DATE: 06-29-92 PM
METHOD: NIOSH 500

TRAVIS AFB
PAINT BOOTH TESTS
ACUREX PROJECT 8485

PAINT: LT GREEN PRIMER
OBJECT: QEC PANELS

D E INITIALS: BN & LJL
Q A INITIALS: LJL

GRID LOC	ACUREX SAMPLE #	FILTER #	PUMP #	PRE-CAL (ml/min)	POST-CAL (ml/min)	RUN TIME (min)	PRE #1 (g)	PRE #2 (g)	POST #1 (g)	POST #2 (g)	AVG FLOW (L/MIN)	PRE AVG (g)	POST AVG (g)	PART WT (g)	PARTICULATE (mg/M3)
1	900151	108	55	3010	3033	68	0.0122	0.0122	0.0123	0.0123	3.022	0.0122	0.0123	0.0001	0.5
2	900152	175	42	3000	3033	68	0.0126	0.0127	0.0127	0.0126	3.017	0.0127	0.0127	0.0000	< MDL
3	900153	145	54	3024	2994	68	0.0130	0.0129	0.0129	0.0129	3.009	0.0130	0.0129	0.0000	< MDL
4	900154	114	25	3000	2997	68	0.0117	0.0117	0.0117	0.0117	2.999	0.0117	0.0117	0.0000	< MDL
5	900155	212	49	3060	3085	68	0.0131	0.0132	0.0131	0.0131	3.073	0.0131	0.0131	0.0000	< MDL
6	900156	135	47	3060	3075	68	0.0128	0.0128	0.0127	0.0127	3.068	0.0128	0.0127	0.0000	< MDL
6 DUP	900157	156	19	3035	3003	68	0.0129	0.0129	0.0128	0.0129	3.019	0.0129	0.0129	0.0000	< MDL
7	900158	176	12	3002	3040	68	0.0133	0.0132	0.0133	0.0133	3.021	0.0132	0.0133	0.0001	0.5
8	900159	110	35	3036	3006	68	0.0136	0.0135	0.0136	0.0135	3.021	0.0136	0.0135	0.0000	< MDL
9	900160	120	33	3040	3069	68	0.0122	0.0123	0.0123	0.0123	3.055	0.0123	0.0123	0.0000	< MDL
10	900161	66	32	3060	3069	68	0.0123	0.0124	0.0124	0.0124	3.065	0.0123	0.0124	0.0001	0.5
11	900162	23	46	3000	3051	68	0.0135	0.0135	0.0136	0.0136	3.026	0.0135	0.0136	0.0001	0.5
12	900163	182	30	3033	3021	68	0.0127	0.0127	0.0127	0.0127	3.027	0.0127	0.0127	0.0000	< MDL
21	900164	119	48	3035	3103	67	0.0125	0.0125	0.0125	0.0125	3.069	0.0125	0.0125	0.0000	< MDL
22	900165	60	51	3000	3015	68	0.0130	0.0130	0.0131	0.0131	3.008	0.0130	0.0131	0.0001	0.5
23	900166	159	29	3003	2985	68	0.0119	0.0119	0.0122	0.0122	2.994	0.0119	0.0122	0.0003	1.5
24	900167	20	34	3006	2968	68	0.0117	0.0117	0.0118	0.0118	2.987	0.0117	0.0118	0.0001	0.5
13	900168	122	18	3010	3048	68	0.0134	0.0134	0.0135	0.0134	3.029	0.0134	0.0134	0.0000	< MDL
14	900169	181	20	3040	3033	68	0.0128	0.0128	0.0129	0.0130	3.037	0.0128	0.0130	0.0002	1.0
15	900170	167	45	3068	3048	68	0.0130	0.0130	0.0133	0.0133	3.058	0.0130	0.0133	0.0003	1.4
16	900171	146	53	3050	3033	68	0.0120	0.0120	0.0121	0.0121	3.042	0.0120	0.0121	0.0001	0.5
17	900172	81	50	3050	3033	67	0.0120	0.0121	0.0122	0.0122	3.042	0.0121	0.0122	0.0001	0.5
18	900173	155	21	3045	3045	68	0.0133	0.0133	0.0134	0.0135	3.045	0.0133	0.0134	0.0001	0.5
19	900174	112	40	3040	3082	68	0.0131	0.0131	0.0134	0.0133	3.061	0.0131	0.0133	0.0002	1.0
20	900175	198	17	3045	3021	68	0.0128	0.0129	0.0130	0.0130	3.033	0.0129	0.0130	0.0001	0.5
20 DUP	900176	121	15	3015	3015	69	0.0133	0.0132	0.0132	0.0133	3.015	0.0133	0.0133	0.0000	< MDL
P over	900141	35	31	3030	2985	67	0.0125	0.0124	0.0126	0.0127	3.008	0.0125	0.0126	0.0001	0.5
P under	900142	140	52	3050	3027	68	0.0132	0.0131	0.0132	0.0131	3.039	0.0132	0.0131	0.0000	< MDL
1A	900144	128	28	3040	3012	67	0.0127	0.0127	0.0127	0.0126	3.026	0.0127	0.0127	0.0000	< MDL
2A	900145	202	43	2990	3024	67	0.0120	0.0120	0.0119	0.0119	3.007	0.0120	0.0119	0.0000	< MDL
3A	900146	211	16	3060	3119	67	0.0127	0.0127	0.0126	0.0125	3.090	0.0127	0.0126	0.0000	< MDL
1B	900147	113	14	2980	3012	68	0.0124	0.0124	0.0124	0.0124	2.996	0.0124	0.0124	0.0000	< MDL
1B DUP	900148	197	4	2975	2884	67	0.0139	0.0138	0.0138	0.0138	2.930	0.0138	0.0138	0.0000	< MDL
2B	900149	190	1	2990	3033	68	0.0125	0.0125	0.0125	0.0125	3.012	0.0125	0.0125	0.0000	< MDL
3B	900150	191	7	2960	2887	68	0.0130	0.0130	0.0130	0.0130	2.924	0.0130	0.0130	0.0000	< MDL
F BLANK	900143	170	3			68	0.0119	0.0120	0.0120	0.0119	3.000	0.0119	0.0120	0.0001	0.5
EXHAUST											0.000	0.0000	0.0000	0.0000	no sample
RECIRC											0.000	0.0000	0.0000	0.0000	no sample

TEST: PARTICULATE #5
DATE: 06-29-92 PM
METHOD: NIOSH 500

TRAVIS AFB
PAINT BOOTH TESTS
ACUREX PROJECT 8485

D E INITIALS: BN & LJL
Q A INITIALS: LJL

GRID CHART - PARTICULATE

Painter Over
0.5

Painter Under
< MDL

EXHAUST GRID

1 0.5	2 < MDL	3 < MDL	4 < MDL
5 < MDL	6 < MDL < MDL	7 0.5	8 < MDL
9 < MDL	10 0.5	11 0.5	12 < MDL
21 < MDL	22 0.5	23 1.5	24 0.5
13 < MDL	14 1.0	15 1.4	16 0.5
17 0.5	18 0.5	19 1.0	20 0.5 < MDL

Field Blank
0.5

INLET GRID A

1A
< MDL

2A
< MDL

3A
< MDL

INLET GRID B

1B
< MDL
< MDL

2B
< MDL

3B
< MDL

PAINT TYPE: LT GREEN PRIMER
OBJECT: QEC PANELS

UNITS: mg/M3
OSHA TWA: ?? mg/M3

GRID MDL: 0.1 mg/SAMPLE
PAINTER MDL: 0.1 mg/SAMPLE

EXHAUST DUCT:no sample
RECIRC DUCT:no sample

TEST: SINGLE PASS PARTICULATE #1 TRAVIS AFB PAINT: PRIMER & GRAY TOPCOAT D E INITIALS: BN & LJL
DATE: 07-01-92 AM2 PAINT BOOTH TESTS OBJECT: RAMP & QEC PANELS Q A INITIALS: LJL
METHOD: NIOSH 500 ACUREX PROJECT 8485

(RAW DATA, BALANCE ACCURACY 0.0001)

GRID LOC	ACUREX SAMPLE #	FILTER #	PUMP #	PRE-CAL (ml/min)	POST-CAL (ml/min)	RUN TIME (min)	PRE #1 (g)	PRE #2 (g)	POST #1 (g)	POST #2 (g)	AVG FLOW (L/MIN)	PRE AVG (g)	POST AVG (g)	PART WT (g)	PARTICULATE (mg/M3)
1	900185	68	45	3009	3033	62	0.0133	0.0133	0.0133	0.0133	3.021	0.0133	0.0133	0.0000	< MDL
2	900186	213	11	3009	3033	63	0.0128	0.0128	0.0128	0.0128	3.021	0.0128	0.0128	0.0000	< MDL
3	900187	46	28	2957	2968	62	0.0132	0.0132	0.0132	0.0133	2.963	0.0132	0.0132	0.0000	< MDL
3 DUP	900214	44	53	2994	3030	62	0.0116	0.0116	0.0116	0.0116	3.012	0.0116	0.0116	0.0000	< MDL
4	900188	75	43	2991	2980	62	0.0126	0.0127	0.0127	0.0127	2.986	0.0126	0.0127	0.0001	0.5
5	900189	125	29	3000	2994	62	0.0127	0.0127	0.0128	0.0127	2.997	0.0127	0.0128	0.0001	0.5
6	900190	10	33	3009	2957	62	0.0123	0.0123	0.0124	0.0124	2.983	0.0123	0.0124	0.0001	0.5
7	900191	7	51	2994	3006	62	0.0121	0.0121	0.0122	0.0122	3.000	0.0121	0.0122	0.0001	0.5
8	900192	48	18	3027	3003	62	0.0132	0.0131	0.0132	0.0132	3.015	0.0131	0.0132	0.0001	0.5
9	900193	117	24	3003	3060	62	0.0121	0.0121	0.0123	0.0124	3.032	0.0121	0.0124	0.0003	1.6
10	900194	138	19	2991	2977	62	0.0123	0.0124	0.0128	0.0128	2.984	0.0123	0.0128	0.0005	2.7
11	900195	87	17	3009	3015	62	0.0117	0.0117	0.0123	0.0123	3.012	0.0117	0.0123	0.0006	3.2
11 DUP	900213	187	35	2968	2983	1	0.0123	0.0123	0.0123	0.0123	2.976	0.0123	0.0123	0.0000	< MDL
12	900196	177	5	3027	3018	63	0.0127	0.0126	0.0130	0.0129	3.023	0.0127	0.0129	0.0002	1.1
21	900197	127	42	2994	3030	62	0.0133	0.0133	0.0136	0.0135	3.012	0.0133	0.0136	0.0003	1.6
22	900198	143	7	2965	2971	62	0.0133	0.0133	0.0140	0.0139	2.968	0.0133	0.0139	0.0006	3.3
22 DUP	900212	52	31	2977	2940	63	0.0127	0.0127	0.0130	0.0129	2.959	0.0127	0.0130	0.0003	1.6
23	900199	104	54	2983	2985	62	0.0126	0.0126	0.0135	0.0135	2.984	0.0126	0.0135	0.0009	4.9
24	900200	169	50	3033	2998	62	0.0131	0.0131	0.0134	0.0133	3.016	0.0131	0.0134	0.0003	1.6
13	900201	103	30	3000	2994	62	0.0128	0.0128	0.0132	0.0132	2.997	0.0128	0.0132	0.0004	2.2
14	900202	107	20	2980	2974	62	0.0136	0.0135	0.0153	0.0153	2.977	0.0135	0.0153	0.0018	9.8
15	900203	95	13	3030	2991	61	0.0125	0.0125	0.0140	0.0140	3.011	0.0125	0.0140	0.0015	8.2
15 DUP	900210	204	55	3006	3012	62	0.0120	0.0120	0.0134	0.0134	3.009	0.0120	0.0134	0.0014	7.5
16	900204	130	47	3000	2988	62	0.0121	0.0122	0.0125	0.0124	2.994	0.0121	0.0124	0.0003	1.6
17	900205	142	34	3009	3009	62	0.0133	0.0133	0.0153	0.0152	3.009	0.0133	0.0152	0.0019	10.2
18	900206	174	15	2968	2983	63	0.0126	0.0126	0.0148	0.0149	2.976	0.0126	0.0148	0.0022	11.7
19	900207	4	12	3006	3048	62	0.0117	0.0116	0.0137	0.0137	3.027	0.0117	0.0137	0.0020	10.7
20	900208	78	10	3015	3110	63	0.0127	0.0127	0.0137	0.0137	3.063	0.0127	0.0137	0.0010	5.2
P over	900184	106	49	2983	2925	62	0.0124	0.0125	0.0123	0.0123	2.954	0.0125	0.0123	0.0000	< MDL
P under	900183	182	52	3036	3012	62	0.0127	0.0127	0.0127	0.0127	3.024	0.0127	0.0127	0.0000	< MDL
1A	900177	196	39	2985	2994	61	0.0129	0.0129	0.0130	0.0129	2.990	0.0129	0.0129	0.0000	< MDL
2A	900178	161	36	2985	3042	61	0.0125	0.0124	0.0124	0.0124	3.014	0.0124	0.0124	0.0000	< MDL
3A	900179	72	1	2968	2934	62	0.0120	0.0120	0.0120	0.0120	2.951	0.0120	0.0120	0.0000	< MDL
1B	900180	111	6	3018	3009	62	0.0134	0.0133	0.0134	0.0133	3.014	0.0134	0.0133	0.0000	< MDL
2B	900181	147	16	2977	3000	62	0.0124	0.0124	0.0124	0.0123	2.989	0.0124	0.0123	0.0000	< MDL
3B	900182	158	32	2994	2977	61	0.0122	0.0122	0.0122	0.0121	2.986	0.0122	0.0121	0.0000	< MDL
F BLANK?											0.000	0.0000	0.0000	0.0000	no sample
EXHAUST											0.000	0.0000	0.0000	0.0000	no sample
RECIRC											0.000	0.0000	0.0000	0.0000	no sample

TEST: SINGLE PASS PARTICULATE #1
DATE: 07-01-92 AM2
METHOD: NIOSH 500

TRAVIS AFB
PAINT BOOTH TESTS
ACUREX PROJECT 8485

D E INITIALS: BN & LJL
Q A INITIALS: LJL

GRID CHART - PARTICULATE

EXHAUST GRID

1 < MDL	2 < MDL	3 < MDL < MDL	4 0.5	
5 0.5	6 0.5	7 0.5	8 0.5	
9 1.6	10 2.7	11 3.2 < MDL	12 1.1	
21 1.6	22 3.3 1.6	23 4.9	24 1.6	
13 2.2	14 9.8	15 8.2 7.5	16 1.6	
17 10.2	18 11.7	19 10.7	20 5.2	

Painter Over
< MDL

Painter Under
< MDL

Field Blank

INLET GRID A

1A
< MDL

2A
< MDL

3A
< MDL

INLET GRID B

1B
< MDL

2B
< MDL

3B
< MDL

PAINT TYPE: PRIMER & GRAY TOPCOAT
OBJECT: RAMP & GEC PANELS

UNITS: mg/M3
OSHA TWA: ?? mg/M3

GRID MDL: 0.1 mg/SAMPLE
PAINTER MDL: 0.1 mg/SAMPLE

EXHAUST DUCT:no sample
RECIRC DUCT:no sample

TEST: S.P. PARTICULATE #2
DATE: 07-01-92 PM
METHOD: NIOSH 500

TRAVIS AFB
PAINT BOOTH TESTS
ACUREX PROJECT 8485

PAINT: GRAY TOPCOAT
OBJECT: BOX, PIPES & TABLE

D E INITIALS: BN & LJL
Q A INITIALS: LJL

GRID LOC	ACUREX SAMPLE #	FILTER #	PUMP #	PRE-CAL (ml/min)	POST-CAL (ml/min)	RUN TIME (min)	PRE #1 (g)	PRE #2 (g)	POST #1 (g)	POST #2 (g)	AVG FLOW (L/MIN)	PRE AVG (g)	POST AVG (g)	PART WT (g)	PARTICULA (mg/M3)
1	900209	249	55	3012	2974	67	0.0119	0.0121	0.0120	0.0120	2.993	0.0120	0.0120	0.0000	< MDL
2	900215	216	15	2983	3033	68	0.0128	0.0128	0.0127	0.0127	3.008	0.0128	0.0127	0.0000	< MDL
2 DUP	900216	236	24	3060	3091	68	0.0119	0.0119	0.0119	0.0119	3.076	0.0119	0.0119	0.0000	< MDL
3	900217	255	18	3003	3000	68	0.0121	0.0123	0.0124	0.0124	3.002	0.0122	0.0124	0.0002	1.0
4	900218	246	39	2994	3072	68	0.0121	0.0122	0.0125	0.0124	3.033	0.0121	0.0125	0.0004	1.9
5	900219	251	11	3033	3129	68	0.0127	0.0130	0.0131	0.0131	3.081	0.0129	0.0131	0.0002	1.0
6	900220	240	1	3036	2977	68	0.0124	0.0124	0.0125	0.0125	3.007	0.0124	0.0125	0.0001	0.5
7	900221	230	43	2980	2986	68	0.0129	0.0129	0.0131	0.0131	2.983	0.0129	0.0131	0.0002	1.0
8	900222	219	28	2968	2948	68	0.0120	0.0120	0.0122	0.0122	2.958	0.0120	0.0122	0.0002	1.0
9	900223	234	53	3030	3048	68	0.0134	0.0134	0.0137	0.0137	3.039	0.0134	0.0137	0.0003	1.5
10	900224	229	10	3060	3075	68	0.0129	0.0129	0.0137	0.0136	3.068	0.0129	0.0137	0.0008	3.8
11	900225	252	29	2994	2895	68	0.0133	0.0134	0.0144	0.0144	2.945	0.0134	0.0144	0.0010	5.0
12	900226	221	30	2994	2934	68	0.0132	0.0132	0.0138	0.0139	2.964	0.0132	0.0138	0.0006	3.0
12 DUP	900227	244	50	2998	3027	68	0.0121	0.0124	0.0128	0.0128	3.013	0.0122	0.0128	0.0006	2.9
21	900228	241	35	2983	2994	67	0.0125	0.0129	0.0132	0.0131	2.989	0.0127	0.0131	0.0004	2.0
22	900229	217	7	2971	2965	68	0.0122	0.0121	0.0131	0.0131	2.968	0.0121	0.0131	0.0010	5.0
22 DUP	900230	220	5	3018	3003	69	0.0117	0.0117	0.0124	0.0125	3.011	0.0117	0.0124	0.0007	3.4
23	900231	237	34	3009	2988	68	0.0119	0.0119	0.0133	0.0132	2.999	0.0119	0.0133	0.0014	6.9
24	900232	232	42	3030	3021	68	0.0132	0.0132	0.0139	0.0139	3.026	0.0132	0.0139	0.0007	3.4
13	900233	233	33	2957	2959	68	0.0131	0.0131	0.0134	0.0135	2.958	0.0131	0.0134	0.0003	1.5
14	900234	225	6	3009	3018	68	0.0124	0.0123	0.0136	0.0136	3.014	0.0123	0.0136	0.0013	6.3
15	900235	222	47	2988	2957	68	0.0129	0.0128	0.0144	0.0144	2.973	0.0128	0.0144	0.0016	7.9
16	900236	247	54	2985	2959	68	0.0132	0.0126	0.0143	0.0143	2.972	0.0129	0.0143	0.0014	6.9
16 DUP	900237	253	20	2974	2954	68	0.0123	0.0124	0.0131	0.0131	2.964	0,0124	0.0131	0.0007	3.5
17	900238	227	17	3015	2974	67	0.0129	0.0128	0.0138	0.0137	2.995	0.0128	0.0137	0.0009	4.5
18	900239	245	16	3000	3054	67	0.0123	0.0124	0.0140	0.0139	3.027	0.0123	0.0140	0.0017	8.4
19	900240	235	45	3033	3027	68	0.0120	0.0120	0.0135	0.0134	3.030	0.0120	0.0135	0.0015	7.3
20	900241	254	36	3042	3042	68	0.0127	0.0130	0.0136	0.0136	3.042	0.0128	0.0136	0.0008	3.9
P over	900249	243	52	3012	3045	68	0.0131	0.0133	0.0153	0.0154	3.029	0.0132	0.0153	0.0021	10.2
P under	900250	224	49	2974	2980	67	0.0123	0.0123	0.0129	0.0129	2.977	0.0123	0.0129	0.0006	3.0
1A	900242	250	31	2941	2917	67	0.0113	0.0115	0.0115	0.0114	2.929	0.0114	0.0114	0.0000	< MDL
2A	900244	248	32	2977	2912	67	0.0126	0.0126	0.0126	0.0125	2.945	0.0126	0.0125	0.0000	< MDL
3A	900245	231	19	2977	2959	67	0.0128	0.0128	0.0127	0.0127	2.968	0.0128	0.0127	0.0000	< MDL
1B	900246	239	13	2991	3033	66	0.0123	0.0125	0.0124	0.0123	3.012	0.0124	0.0123	0.0000	< MDL
2B	900247	238	12	3048	3072	68	0.0119	0.0118	0.0118	0.0117	3.060	0.0119	0.0118	0.0000	< MDL
3B	900248	218	51	3006	2974	68	0.0117	0.0117	0.0117	0.0117	2.990	0.0117	0.0117	0.0000	< MDL
F BLANK?											0.000	0.0000	0.0000	0.0000	no sample
EXHAUST											0.000	0.0000	0.0000	0.0000	no sample
RECIRC											0.000	0.0000	0.0000	0.0000	no sample

TEST: S.P. PARTICULATE #2
DATE: 07-01-92 PM
METHOD: NIOSH 500

TRAVIS AFB
PAINT BOOTH TESTS
ACUREX PROJECT 8485

D E INITIALS: BN & LJL
Q A INITIALS: LJL

GRID CHART - PARTICULATE

Painter Over 10.2

Painter Under 3.0

EXHAUST GRID

1 < MDL	2 < MDL < MDL	3 1.0	4 1.9
5 1.0	6 0.5	7 1.0	8 1.0
9 1.5	10 3.8	11 5.0	12 3.0 2.9
21 2.0	22 5.0 3.4	23 6.9	24 3.4
13 1.5	14 6.3	15 7.9	16 6.9 3.5
17 4.5	18 8.4	19 7.3	20 3.9

Field Blank

INLET GRID A

1A < MDL

2A < MDL

3A < MDL

INLET GRID B

1B < MDL

2B < MDL

3B < MDL

PAINT TYPE: GRAY TOPCOAT
OBJECT: BOX, PIPES & TABLE

UNITS: mg/M3
OSHA TWA: ?? mg/M3

GRID MDL: 0.1 mg/SAMPLE
PAINTER MDL: 0.1 mg/SAMPLE

EXHAUST DUCT:no sample
RECIRC DUCT:no sample

TEST: METALS #1
DATE: 06-22-92 PM
METHOD: NIOSH 7300

TRAVIS AFB
PAINT BOOTH TESTS
ACUREX PROJECT 8485

PAINT: LT GREEN PRIMER
OBJECT: COMFORT PALLET

D E INITIALS: LJL
Q A INITIALS:

GRID LOC	ACUREX SAMPLE #	BASE SAMPLE #	PUMP #	PRE-CAL (ml/min)	POST-CAL (ml/min)	RUN TIME (min)	LEAD (ug)	ZINC (ug)	STRONTIUM (ug)	CHROMIUM (ug)	AVG FLOW (L/MIN)	LEAD (ug/M3)	ZINC (ug/M3)	STRONTIUM (ug/M3)	CHROMIUM (ug/M3)
1	39	EX921067	41	3045	3039	47	< 0.075	0.80	0.80	0.57	3.042	< MDL	5.6	5.6	4.0
2	18	EX921068	35	3023	2956	46	< 0.075	1.06	1.72	1.22	2.990	< MDL	7.7	12.5	8.9
3	7	EX921069	23	3042	3036	47	< 0.075	1.46	7.47	4.52	3.039	< MDL	10.2	52.3	31.6
4	26	EX921070	43	2980	2994	46	< 0.075	0.42	15.88	9.63	2.987	< MDL	3.1	115.6	70.1
5	22	EX921071	31	3000	2994	46	< 0.075	0.45	2.37	1.50	2.997	< MDL	3.3	17.2	10.9
6	24	EX921072	12	3085	3151	46	< 0.075	0.72	6.06	3.64	3.118	< MDL	5.0	42.3	25.4
7	1	EX921073	30	2983	3003	46	< 0.075	1.29	16.11	9.50	2.993	< MDL	9.4	117.0	69.0
8	15	EX921074	4	2997	2959	46	< 0.075	0.69	24.92	14.68	2.978	< MDL	5.0	181.9	107.2
9	21	EX921075	8	2980	2988	47	< 0.075	1.06	5.78	3.54	2.984	< MDL	7.6	41.2	25.2
10	6	EX921076	6	3021	3027	47	< 0.075	0.48	24.34	14.37	3.024	< MDL	3.4	171.3	101.1
11	25	EX921077	14	2988	2903	47	< 0.075	0.86	31.50	18.80	2.946	< MDL	6.2	227.5	135.8
12	78	EX921078	1	3066	3029	47	< 0.075	0.50	< 0.30	< 0.30	3.048	< MDL	3.5	< MDL	< MDL
12 DUP	16	EX921091	34	3006	3000	46	< 0.075	0.63	57.57	33.82	3.003	< MDL	4.6	416.8	244.8
21	40	EX921087	10	3091	3171	47	< 0.075	1.29	8.12	5.06	3.131	< MDL	8.8	55.2	34.4
22	19	EX921088	11	2974	3042	47	< 0.075	0.75	26.12	15.81	3.008	< MDL	5.3	184.8	111.8
23	27	EX921089	33	3021	3021	46	< 0.075	0.62	59.14	36.16	3.021	< MDL	4.5	425.6	260.2
24	11	EX921090	24	3066	3158	47	0.24	3.08	72.09	42.58	3.112	1.6	21.1	492.9	291.1
13	10	EX921079	36	3054	3075	46	0.14	2.25	12.58	7.44	3.065	1.0	16.0	89.2	52.8
14	29	EX921080	9	3000	2926	48	< 0.075	0.50	40.12	24.22	2.963	< MDL	3.5	282.1	170.3
15	4	EX921081	42	2985	2959	46	< 0.075	0.56	33.16	19.54	2.972	< MDL	4.1	242.6	142.9
15 DUP	17	EX921092	28	3045	3012	46	< 0.075	0.41	30.64	18.41	3.029	< MDL	2.9	219.9	132.2
16	77	EX921082	18	3021	2991	46	< 0.075	0.44	70.80	42.48	3.006	< MDL	3.2	512.0	307.2
17	20	EX921083	7	3006	3063	46	< 0.073	0.56	3.52	3.36	3.035	< MDL	4.0	25.2	24.1
18	23	EX921084	5	3033	3018	47	< 0.075	0.51	16.68	10.23	3.026	< MDL	3.6	117.3	71.9
19	2	EX921085	25	3075	3129	46	0.14	0.51	82.44	49.35	3.102	1.0	3.6	577.7	345.8
20	12	EX921086	16	3021	3027	46	0.10	0.41	142.46	81.94	3.024	0.7	2.9	1024.1	589.1
P over	14	EX921127	19	3003	2957	45	< 0.075	0.62	51.22	30.21	2.980	< MDL	4.6	382.0	225.3
P under	9	EX921126	32	2988	2974	45	< 0.075	0.46	6.78	4.26	2.981	< MDL	3.4	50.5	31.8
1A	13	EX921061	20	3021	3012	46	< 0.075	0.42	< 0.30	1.18	3.017	< MDL	3.0	< MDL	8.5
2A	30	EX921062	3	3003	3009	45	< 0.075	0.62	< 0.30	< 0.30	3.006	< MDL	4.6	< MDL	< MDL
3A	5	EX921063	27	3012	2994	45	< 0.075	0.48	< 0.30	< 0.30	3.003	< MDL	3.6	< MDL	< MDL
1B	3	EX921064	29	3000	2977	46	< 0.075	0.48	< 0.30	< 0.30	2.989	< MDL	3.5	< MDL	< MDL
2B	28	EX921065	13	3097	3280	45	< 0.075	0.64	< 0.30	1.86	3.189	< MDL	4.5	< MDL	13.0
3B	8	EX921066	40	3009	3009	46	< 0.075	0.44	0.45	0.39	3.009	< MDL	3.2	3.3	2.8
P over *	212	EX921279	18	3024	2988	38	< 0.075	0.58	60.14	35.28	3.006	< MDL	5.1	526.5	308.9
P under*	213	EX921280	21	3012	2934	38	< 0.075	0.58	14.52	8.60	2.973	< MDL	5.1	128.5	76.1
BLANK											0.000	no sample	no sample	no sample	no sample

LOCATION	SAMPLES ACETONE	NITRIC	FILTER	IMPINGER	SAMPLE (CU FT)	LEAD (ug)	ZINC (ug)	STRONTIUM (ug)	CHROMIUM (ug)	SAMPLE (M3)	LEAD (ug/M3)	ZINC (ug/M3)	STRONTIUM (ug/M3)	CHROMIUM (ug/M3)
EXHAUST	EX921376	EX921377	EX921378	EX921379	38.80	0	32.05	15.85	25.4	1.098	< MDL	29.2	14.4	23.1
RECIRC	EX921380	EX921381	EX921394	EX921395	48.98	2.5	133	15.4	87.4	1.386	1.8	96.0	11.1	63.1

EXHAUST	ACETONE	EX921376	< 2.5	1.85	7.3	4.50	1.098	< MDL	1.7	6.6	4.1
	NITRIC	EX921377	< 0.5	5.2	7.7	7.20	1.098	< MDL	4.7	7.0	6.6
	FILTER	EX921378	< 2.5	< 1.25	0.85	1.70	1.098	< MDL	< MDL	0.8	1.5

TEST: METALS #1
DATE: 06-22-92 PM
METHOD: NIOSH 7300

TRAVIS AFB
PAINT BOOTH TESTS
ACUREX PROJECT 8485

PAINT: LT GREEN PRIMER
OBJECT: COMFORT PALLET

D E INITIALS: LJL
Q A INITIALS:

GRID LOC	ACUREX SAMPLE #	BASE SAMPLE #	PUMP #	PRE-CAL (ml/min)	POST-CAL (ml/min)	RUN TIME (min)	LEAD (ug)	ZINC (ug)	STRONTIUM (ug)	CHROMIUM (ug)	AVG FLOW (L/MIN)	LEAD (ug/M3)	ZINC (ug/M3)	STRONTIUM (ug/M3)	CHROMIUM (ug/M3)
					IMPINGER	EX921379	< 0.5	25	< 0.2	12.00	1.098	< MDL	22.8	< MDL	10.9
				RECIRC	ACETONE	EX921380	< 2.5	15	5.3	5.40	1.386	< MDL	10.8	3.8	3.9
					NITRIC	EX921381	< 1.0	60	8.5	26.00	1.386	< MDL	43.3	6.1	18.8
					FILTER	EX921394	2.5	18	1.6	44.00	1.386	1.8	13.0	1.2	31.7
					IMPINGER	EX921395	< 0.5	40	< 0.2	12.00	1.386	< MDL	28.9	< MDL	8.7

TEST: METALS #1
DATE: 06-22-92 PM
METHOD: NIOSH 7300

TRAVIS AFB
PAINT BOOTH TESTS
ACUREX PROJECT 8485

D E INITIALS: LJL
Q A INITIALS: 0

GRID CHART 1 - LEAD

Painter Over
< MDL
< MDL 2nd
Painter Under
< MDL
< MDL 2nd

EXHAUST GRID

1 < MDL	2 < MDL	3 < MDL	4 < MDL
5 < MDL	6 < MDL	7 < MDL	8 < MDL
9 < MDL	10 < MDL	11 < MDL	12 < MDL < MDL
21 < MDL	22 < MDL	23 < MDL	24 1.6
13 1.0	14 < MDL	15 < MDL < MDL	16 < MDL
17 < MDL	18 < MDL	19 1.0	20 0.7

INLET GRID A

1A < MDL
2A < MDL
3A < MDL

INLET GRID B

1B < MDL
2B < MDL
3B < MDL

PAINT TYPE: LT GREEN PRIMER UNITS: ug/M3 GRID MDL: 0.075 ug/SAMPLE EXHAUST DUCT: < MDL

OBJECT: COMFORT PALLET OSHA TWA: 50 ug/M3 PAINTER MDL: 0.075 ug/SAMPLE RECIRC DUCT: 1.8

TEST: METALS #1
DATE: 06-22-92 PM
METHOD: NIOSH 7300

TRAVIS AFB
PAINT BOOTH TESTS
ACUREX PROJECT 8485

D E INITIALS: LJL
Q A INITIALS: 0

GRID CHART 2 - ZINC

Painter Over
4.6
5.1 2nd
Painter Under
3.4
5.1 2nd

INLET GRID A

1A 3.0

2A 4.6

3A 3.6

EXHAUST GRID

1 5.6	2 7.7	3 10.2	4 3.1
5 3.3	6 5.0	7 9.4	8 5.0
9 7.6	10 3.4	11 6.2	12 3.5 4.6
21 8.8	22 5.3	23 4.5	24 21.1
13 16.0	14 3.5	15 4.1 2.9	16 3.2
17 4.0	18 3.6	19 3.6	20 2.9

INLET GRID B

1B 3.5

2B 4.5

3B 3.2

PAINT TYPE: LT GREEN PRIMER
OBJECT: COMFORT PALLET

UNITS: ug/M3
OSHA TWA: 1000 ug/M3

GRID MDL: 0.3 ug/SAMPLE
PAINTER MDL: 0.3 ug/SAMPLE

EXHAUST DUCT: 29.2
RECIRC DUCT: 96.0

TEST: METALS #1
DATE: 06-22-92 PM
METHOD: NIOSH 7300

TRAVIS AFB
PAINT BOOTH TESTS
ACUREX PROJECT 8485

D E INITIALS: LJL
Q A INITIALS: 0

GRID CHART 3 - STRONTIUM

Painter Over
382.0
526.5 2nd
Painter Under
50.5
128.5 2nd

EXHAUST GRID

1 5.6	2 12.5	3 52.3	4 115.6
5 17.2	6 42.3	7 117.0	8 181.9
9 41.2	10 171.3	11 227.5	12 < MDL 416.8
21 55.2	22 184.8	23 425.6	24 492.9
13 89.2	14 282.1	15 242.6 219.9	16 512.0
17 25.2	18 117.3	19 577.7	20 1024.1

INLET GRID A

1A < MDL

2A < MDL

3A < MDL

INLET GRID B

1B < MDL

2B < MDL

3B 3.3

PAINT TYPE: LT GREEN PRIMER UNITS: ug/M3 GRID MDL: 0.3 ug/SAMPLE EXHAUST DUCT: 14.4

OBJECT: COMFORT PALLET OSHA TWA: ?? ug/M3 PAINTER MDL: 0.3 ug/SAMPLE RECIRC DUCT: 11.1

TEST: METALS #1
DATE: 06-22-92 PM
METHOD: NIOSH 7300

TRAVIS AFB
PAINT BOOTH TESTS
ACUREX PROJECT 8485

D E INITIALS: LJL
Q A INITIALS: 0

GRID CHART 4 - CHROMIUM

Painter Over
225.3
308.9 2nd
Painter Under
31.8
76.1 2nd

INLET GRID A

1A 8.5

2A < MDL

3A < MDL

EXHAUST GRID

1 4.0	2 8.9	3 31.6	4 70.1
5 10.9	6 25.4	7 69.0	8 107.2
9 25.2	10 101.1	11 135.8	12 < MDL 244.8
21 34.4	22 111.8	23 260.2	24 291.1
13 52.8	14 170.3	15 142.9 132.2	16 307.2
17 24.1	18 71.9	19 345.8	20 589.1

INLET GRID B

1B < MDL

2B 13.0

3B 2.8

PAINT TYPE: LT GREEN PRIMER UNITS: ug/M3 GRID MDL: 0.3 ug/SAMPLE EXHAUST DUCT: 23.1

OBJECT: COMFORT PALLET OSHA TWA: 50 ug/M3 PAINTER MDL: 0.3 ug/SAMPLE RECIRC DUCT: 63.1

TEST: METALS #2
DATE: 06-24-92 PM
METHOD: NIOSH 7300

TRAVIS AFB
PAINT BOOTH TESTS
ACUREX PROJECT 8485

PAINT: LT GREEN PRIMER
OBJECT: SPLITTERS

D E INITIALS:
Q A INITIALS:

GRID LOC	ACUREX SAMPLE #	BASE SAMPLE #	PUMP #	PRE-CAL (ml/min)	POST-CAL (ml/min)	RUN TIME (min)	LEAD (ug)	ZINC (ug)	STRONTIUM (ug)	CHROMIUM (ug)	AVG FLOW (L/MIN)	LEAD (ug/M3)	ZINC (ug/M3)	STRONTIUM (ug/M3)	CHROMIUM (ug/M3)
1	120	EX921097	15	3006	3054	66	< 0.075	0.34	0.72	0.57	3.030	< MDL	1.7	3.6	2.9
2	69	EX921098	40	3045	3021	66	< 0.075	0.50	1.23	0.84	3.033	< MDL	2.5	6.1	4.2
2 DUP	79	EX921099	13	3066	3129	64	< 0.075	0.45	1.58	1.05	3.098	< MDL	2.3	8.0	5.3
3	89	EX921100	25	3018	3082	66	< 0.075	0.48	10.23	6.44	3.050	< MDL	2.4	50.8	32.0
4	91	EX921101	31	3003	2980	66	< 0.075	0.88	27.44	17.02	2.992	< MDL	4.5	139.0	86.2
5	92	EX921102	34	3036	2991	65	< 0.075	0.54	1.64	1.10	3.014	< MDL	2.8	8.4	5.6
6	45	EX921103	19	3021	3006	66	< 0.075	0.50	9.86	6.03	3.014	< MDL	2.5	49.6	30.3
7	50	EX921104	4	3036	3015	66	0.077	2.12	38.86	23.37	3.026	0.4	10.6	194.6	117.0
8	47	EX921105	11	3045	3088	66	0.077	0.98	21.02	12.75	3.067	0.4	4.8	103.9	63.0
9	118	EX921106	6	3042	3000	66	< 0.075	0.63	44.90	25.78	3.021	< MDL	3.2	225.2	129.3
10	34	EX921107	30	3006	2985	66	< 0.075	0.71	87.57	51.41	2.996	< MDL	3.6	442.9	260.0
11	83	EX921108	24	3039	3119	66	< 0.075	1.08	147.92	87.64	3.079	< MDL	5.3	727.9	431.3
12	95	EX921109	20	3063	3042	66	< 0.075	0.62	82.74	48.74	3.053	< MDL	3.1	410.7	241.9
21	36	EX921110	10	3030	3091	66	< 0.075	0.81	30.76	17.88	3.061	< MDL	4.0	152.3	88.5
22	31	EX921111	1	3039	3088	67	0.079	0.71	99.00	59.48	3.064	0.4	3.5	482.3	289.8
23	37	EX921112	8	3066	3049	67	< 0.075	0.94	173.30	102.72	3.058	< MDL	4.6	846.0	501.4
23 DUP	35	EX921113	7	3020	3036	66	< 0.075	0.78	158.90	94.56	3.028	< MDL	3.9	795.1	473.2
24	90	EX921114	42	3069	3042	66	< 0.075	0.51	91.50	55.22	3.056	< MDL	2.5	453.7	273.8
13	43	EX921115	5	3072	3036	66	< 0.075	0.66	33.16	19.91	3.054	< MDL	3.3	164.5	98.8
14	41	EX921116	14	3033	3003	66	< 0.075	0.68	80.82	45.36	3.018	< MDL	3.4	405.7	227.7
14 DUP	99	EX921117	18	3066	3018	66	< 0.075	3.14	91.05	51.96	3.042	< MDL	15.6	453.5	258.8
15	88	EX921118	16	3072	3129	66	0.084	0.74	111.80	64.04	3.101	0.4	3.6	546.3	313.0
16	94	EX921119	33	3063	3033	66	< 0.075	0.88	122.56	68.46	3.048	< MDL	4.4	609.2	340.3
17	44	EX921120	41	3021	3012	66	< 0.075	0.58	8.72	5.07	3.017	< MDL	2.9	43.8	25.5
18	108	EX921121	21	3030	3003	66	< 0.075	1.44	74.46	41.82	3.017	< MDL	7.2	374.0	210.1
19	107	EX921122	36	3042	3066	66	< 0.075	7.53	101.06	56.86	3.054	< MDL	37.4	501.4	282.1
20	93	EX921123	23	3036	3224	66	0.085	0.63	91.47	50.81	3.130	0.4	3.0	442.8	246.0
P over	32	EX921124	32	3015	2942	65	0.11	1.77	206.86	118.34	2.979	0.6	9.1	1068.5	611.3
P under	33	EX921125	35	3051	3027	65	< 0.075	0.39	8.16	4.82	3.039	< MDL	2.0	41.3	24.4
1A	46	EX921093	28	2991	3006	65	< 0.075	0.38 <	0.30 <	0.30	2.999	< MDL	1.9	< MDL	< MDL
2A	42	EX921094	43	3060	3054	65	< 0.075	0.81 <	0.30 <	0.30	3.057	< MDL	4.1	< MDL	< MDL
3A	38	EX921095	3	3000	2985	65	< 0.075	0.42 <	0.30 <	0.30	2.993	< MDL	2.2	< MDL	< MDL
3A DUP	49	EX921096	26	2985	2968	1	< 0.075	0.36 <	0.30 <	0.30	2.977	< MDL	120.9	< MDL	< MDL
1B	113	EX921128	12	3018	3090	65	< 0.075	0.33 ?	0.30 <	0.30	3.054	< MDL	1.7	< MDL	< MDL
2B	48	EX921129	29	3024	2962	65	< 0.075	0.41	0.36	0.32	2.993	< MDL	2.1	1.9	1.6
3B	103	EX921130	27	3036	2983	65	< 0.075	0.32	0.33 ?	0.28	3.010	< MDL	1.6	1.7	< MDL
FLD BLANK	104	EX921271	9			66	< 0.075	0.36 <	0.30 <	0.30	3.000	< 0.4	1.8	< 1.5	< 1.5

LOCATION	SAMPLES ACETONE	NITRIC	FILTER	IMPINGER	SAMPLE (CU FT)	LEAD (ug)	ZINC (ug)	STRONTIUM (ug)	CHROMIUM (ug)	SAMPLE (M3)	LEAD (ug/M3)	ZINC (ug/M3)	STRONTIUM (ug/M3)	CHROMIUM (ug/M3)
EXHAUST	EX921382	EX921383	EX921384	EX921385	39.20	0	85.6	13.13	30.08	1.109	< MDL	77.2	11.8	27.1
RECIRC	EX921386	EX921387	EX921416	EX921417	40.84	0	53.9	10.75	40.6	1.156	< MDL	46.6	9.3	35.1

EXHAUST	ACETONE	EX921382	< 2.5	5.6	8.4	5.4	1.109	< MDL	5.0	7.6	4.9
	NITRIC	EX921383	< 0.5	14	3.8	6.40	1.109	< MDL	12.6	3.4	5.8
	FILTER	EX921384	< 2.5	< 1.25	0.93	1.28	1.109	< MDL	< MDL	0.8	1.2
	IMPINGER	EX921385	< 0.5	66	< 0.2	17.00	1.109	< MDL	59.5	0.0	15.3

TEST: METALS #2
DATE: 06-24-92 PM
METHOD: NIOSH 7300

TRAVIS AFB
PAINT BOOTH TESTS
ACUREX PROJECT 8485

PAINT: LT GREEN PRIMER
OBJECT: SPLITTERS

D E INITIALS:
Q A INITIALS:

GRID LOC	ACUREX SAMPLE #	BASE SAMPLE #	PUMP #	PRE-CAL (ml/min)	POST-CAL (ml/min)	RUN TIME (min)	LEAD (ug)	ZINC (ug)	STRONTIUM (ug)	CHROMIUM (ug)	AVG FLOW (L/MIN)	LEAD (ug/M3)	ZINC (ug/M3)	STRONTIUM (ug/M3)	CHROMIUM (ug/M3)
				RECIRC	ACETONE	EX921386	< 2.5	10.9	4.2	4.9	1.156	< MDL	9.4	3.6	4.2
					NITRIC	EX921387	< 0.5	20	5.7	18.00	1.156	< MDL	17.3	4.9	15.6
					FILTER	EX921416	< 2.5	< 1.25	0.85	1.7	1.156	< MDL	< MDL	0.7	1.5
					IMPINGER	EX921417	< 0.5	23	< 0.2	16.00	1.156	< MDL	19.9	0.0	13.8

TEST: METALS #2
DATE: 06-24-92 PM
METHOD: NIOSH 7300

TRAVIS AFB
PAINT BOOTH TESTS
ACUREX PROJECT 8485

D E INITIALS: 0
Q A INITIALS: 0

GRID CHART 1 - LEAD

Painter Over
0.6

Painter Under
< MDL

FIELD BLANK
< 0.4

EXHAUST GRID

1 < MDL	2 < MDL < MDL	3 < MDL	4 < MDL
5 < MDL	6 < MDL	7 0.4	8 0.4
9 < MDL	10 < MDL	11 < MDL	12 < MDL
21 < MDL	22 0.4	23 < MDL < MDL	24 < MDL
13 < MDL	14 < MDL < MDL	15 0.4	16 < MDL
17 < MDL	18 < MDL	19 < MDL	20 0.4

INLET GRID A

1A
< MDL

2A
< MDL

3A
< MDL
** < MDL 1MIN

INLET GRID B

1B
< MDL

2B
< MDL

3B
< MDL

PAINT TYPE: LT GREEN PRIMER UNITS: ug/M3 GRID MDL: 0.075 ug/SAMPLE EXHAUST DUCT: < MDL

OBJECT: SPLITTERS OSHA TWA: 50 ug/M3 PAINTER MDL: 0.075 ug/SAMPLE RECIRC DUCT: < MDL

TEST: METALS #2
DATE: 06-24-92 PM
METHOD: NIOSH 7300

TRAVIS AFB
PAINT BOOTH TESTS
ACUREX PROJECT 8485

D E INITIALS: 0
Q A INITIALS: 0

GRID CHART 2 - ZINC

EXHAUST GRID

1 1.7	2 2.5, 2.3	3 2.4	4 4.5	
5 2.8	6 2.5	7 10.6	8 4.8	
9 3.2	10 3.6	11 5.3	12 3.1	
21 4.0	22 3.5	23 4.6, 3.9	24 2.5	
13 3.3	14 3.4, 15.6	15 3.6	16 4.4	
17 2.9	18 7.2	19 37.4	20 3.0	

Painter Over 9.1

Painter Under 2.0

FIELD BLANK 1.8

INLET GRID A

1A 1.9

2A 4.1

3A 2.2

** 120.9 1MIN

INLET GRID B

1B 1.7

2B 2.1

3B 1.6

PAINT TYPE: LT GREEN PRIMER UNITS: ug/M3 GRID MDL: 0.3 ug/SAMPLE EXHAUST DUCT: 77.2

OBJECT: SPLITTERS OSHA TWA: 1000 ug/M3 PAINTER MDL: 0.3 ug/SAMPLE RECIRC DUCT: 46.6

TEST: METALS #2
DATE: 06-24-92 PM
METHOD: NIOSH 7300

TRAVIS AFB
PAINT BOOTH TESTS
ACUREX PROJECT 8485

D E INITIALS: 0
Q A INITIALS: 0

GRID CHART 3 - STRONTIUM

EXHAUST GRID

Painter Over 1068.5 Painter Under 41.3	1 3.6	2 6.1 8.0	3 50.8	4 139.0	FIELD BLANK < 1.5
INLET GRID A	5 8.4	6 49.6	7 194.6	8 103.9	INLET GRID B
1A < MDL	9 225.2	10 442.9	11 727.9	12 410.7	1B < MDL
2A < MDL	21 152.3	22 482.3	23 846.0 795.1	24 453.7	2B 1.9
3A < MDL ** < MDL 1MIN	13 164.5	14 405.7 453.5	15 546.3	16 609.2	3B 1.7
	17 43.8	18 374.0	19 501.4	20 442.8	

PAINT TYPE: LT GREEN PRIMER UNITS: ug/M3 GRID MDL: 0.3 ug/SAMPLE EXHAUST DUCT: 11.8

OBJECT: SPLITTERS OSHA TWA: ?? ug/M3 PAINTER MDL: 0.3 ug/SAMPLE RECIRC DUCT: 9.3

TEST: METALS #2
DATE: 06-24-92 PM
METHOD: NIOSH 7300

TRAVIS AFB
PAINT BOOTH TESTS
ACUREX PROJECT 8485

D E INITIALS: 0
Q A INITIALS: 0

GRID CHART 4 - CHROMIUM

EXHAUST GRID

Painter Over 611.3 Painter Under 24.4	1 2.9	2 4.2 5.3	3 32.0	4 86.2	FIELD BLANK < 1.5
INLET GRID A	5 5.6	6 30.3	7 117.0	8 63.0	INLET GRID B
1A < MDL					1B < MDL
	9 129.3	10 260.0	11 431.3	12 241.9	
2A < MDL	21 88.5	22 289.8	23 501.4 473.2	24 273.8	2B 1.6
	13 98.8	14 227.7 258.8	15 313.0	16 340.3	
3A < MDL ** < MDL 1MIN					3B < MDL
	17 25.5	18 210.1	19 282.1	20 246.0	

PAINT TYPE: LT GREEN PRIMER UNITS: ug/M3 GRID MDL: 0.3 ug/SAMPLE EXHAUST DUCT: 27.1

OBJECT: SPLITTERS OSHA TWA: 50 ug/M3 PAINTER MDL: 0.3 ug/SAMPLE RECIRC DUCT: 35.1

TEST: METALS #3
DATE: 06-25-92 AM1
METHOD: NIOSH 7300

TRAVIS AFB
PAINT BOOTH TESTS
ACUREX PROJECT 8485

PAINT: LT GREEN PRIMER
OBJECT: BRAKE PARTS, HUBS, RAMP

D E INITIALS: LJL
Q A INITIALS:

GRID LOC	ACUREX SAMPLE #	BASE SAMPLE #	PUMP #	PRE-CAL (ml/min)	POST-CAL (ml/min)	RUN TIME (min)	LEAD (ug)	ZINC (ug)	STRONTIUM (ug)	CHROMIUM (ug)	AVG FLOW (L/MIN)	LEAD (ug/M3)	ZINC (ug/M3)	STRONTIUM (ug/M3)	CHROMIUM (ug/M3)
1	68	EX921208	25	2981	2968	58	1.610	3.99	1.61	1.32	2.975	9.3	23.1	9.3	7.7
2	61	EX921209	10	3000	2980	59	0.660	2.56	0.99 <	0.75	2.990	3.7	14.5	5.6	< MDL
3	87	EX921210	13	3033	3010	56	2.100	25.78	2.16	1.84	3.022	12.4	152.4	12.8	10.9
4	112	EX921211	23	2977	3006	58	3.720	4.32	2.46	2.64	2.992	21.4	24.9	14.2	15.2
5	105	EX921212	22	2997	3030	50	0.077	3.87	2.54	1.77	3.014	0.5	25.7	16.9	11.7
6	71	EX921213	40	2991	3024	58 <	0.075	1.65	3.57	5.64	3.008	< MDL	9.5	20.5	32.3
7	62	EX921214	17	3048	3015	58 <	0.075	1.92	5.73	5.01	3.032	< MDL	10.9	32.6	28.5
7 DUP	117	EX921215	28	3030	3027	58	0.091	1.65	4.89	3.00	3.029	0.5	9.4	27.8	17.1
8	76	EX921216	16	2991	2994	58	0.130	4.06	4.38	2.74	2.993	0.7	23.4	25.2	15.8
9	74	EX921217	41	2977	2906	58	0.110	5.88	11.30	7.32	2.942	0.6	34.5	66.2	42.9
10	130	EX921218	24	3018	3015	58	0.083	30.80	30.98	23.51	3.017	0.5	176.0	177.1	134.4
11	55	EX921219	43	3082	3048	58	0.200	2.79	26.64	15.90	3.065	1.1	15.7	149.9	89.4
12	96	EX921220	32	3088	3057	58	0.076	1.38	12.36	8.25	3.073	0.4	7.7	69.4	46.3
21	100	EX921221	7	2994	2951	58	0.082	1.95	16.97	13.20	2.973	0.5	11.3	98.4	76.6
22	53	EX921222	18	3057	3036	58 <	0.075	1.89	45.71	27.36	3.047	< MDL	10.7	258.7	154.8
23	119	EX921223	42	3024	3042	58 <	0.075	1.44	25.71	15.27	3.033	< MDL	8.2	146.2	86.8
24	65	EX921224	5	2962	2950	59 <	0.075	2.44	12.56	7.48	2.956	< MDL	14.0	72.0	42.9
24 DUP	73	EX921225	14	3066	3039	58 <	0.075	15.62	18.03	10.65	3.053	< MDL	88.2	101.8	60.2
13	52	EX921226	20	3036	3035	58 <	0.075	1.36	24.39	14.72	3.036	< MDL	7.7	138.5	83.6
13 DUP	124	EX921227	8	3075	3042	59 <	0.075	2.82	24.50	14.62	3.059	< MDL	15.6	135.8	81.0
14	64	EX921228	1	2991	3003	59	0.210	4.80	48.99	29.34	2.997	1.2	27.1	277.1	165.9
15	75	EX921229	31	3018	2991	58 <	0.075	3.03	26.12	15.93	3.005	< MDL	17.4	149.9	91.4
16	97	EX921230	21	3024	3007	58 <	0.075	7.32	26.88	16.17	3.016	< MDL	41.9	153.7	92.5
17	115	EX921231	11	2980	2977	59 <	0.075	5.60	19.68	11.54	2.979	< MDL	31.9	112.0	65.7
18	57	EX921232	34	3054	3021	58	0.090	4.89	40.80	24.50	3.038	0.5	27.8	231.6	139.1
19	109	EX921233	15	2997	2985	58	0.093	5.60	69.80	41.68	2.991	0.5	32.3	402.4	240.3
20	80	EX921234	29	2988	2928	58 <	0.075	3.71	19.77	11.96	2.958	< MDL	21.6	115.2	69.7
P over	59	EX921269	30	3030	2940	57	0.100	3.32	19.18	11.56	2.985	0.6	19.5	112.7	67.9
P under	66	EX921270	35	3060	2928	56 <	0.075	2.44 <	0.30	1.14	2.994	< MDL	14.6	< MDL	6.8
1A	67	EX921201	33	3082	3021	57	20.460	6.18 <	0.75	4.35	3.052	117.6	35.5	< MDL	25.0
2A	56	EX921202	27	3051	3006	57	0.680	1.95 <	0.75 <	0.75	3.029	3.9	11.3	< MDL	< MDL
2A DUP	101	EX921203	6	3006	3033	57	0.250	0.88 <	0.75 <	0.75	3.020	1.5	5.1	< MDL	< MDL
3A	58	EX921204	3	3012	2977	57	0.770	2.88 <	0.75 <	0.75	2.995	4.5	16.9	< MDL	< MDL
1B	60	EX921205	19	3072	3012	57	1.880	5.91 <	0.75 <	0.75	3.042	10.8	34.1	< MDL	< MDL
2B	106	EX921206	12	3012	2974	55	2.600	4.71 <	0.75 <	0.75	2.993	15.8	28.6	< MDL	< MDL
3B	116	EX921207	4	3015	2940	56	2.880	4.98 <	0.75 <	0.75	2.978	17.3	29.9	< MDL	< MDL
F BLANK	72	EX921278	26			58	0.330	1.98	0.32 <	0.75	3.000	1.9	11.4	1.8	< 4.3

LOCATION	SAMPLES ACETONE	NITRIC	FILTER	IMPINGER	SAMPLE (CU FT)	LEAD (ug)	ZINC (ug)	STRONTIUM (ug)	CHROMIUM (ug)	SAMPLE (M3)	LEAD (ug/M3)	ZINC (ug/M3)	STRONTIUM (ug/M3)	CHROMIUM (ug/M3)
EXHAUST	EX921388	EX921389	EX921390	EX921391	38.00	0	12.3	5.9	8.55	1.075	< MDL	11.4	5.5	8.0
RECIRC	EX921392	EX921393	EX921348	EX921349	37.31	14.5	120.5	5.7	88.7	1.056	13.7	114.1	5.4	84.0
			EXHAUST	ACETONE	EX921388 <	2.5	5.5	5.1	3.8	1.075	< MDL	5.1	4.7	3.5
				NITRIC	EX921389 <	0.5	4.1	0.8	2.4	1.075	< MDL	3.8	0.7	2.2
				FILTER	EX921390 <	2.5	< 1.25 <	0.5	0.95	1.075	< MDL	< MDL	< MDL	0.9
				IMPINGER	EX921391 <	0.5	2.7 <	0.2	1.4	1.075	< MDL	2.5	< MDL	1.3

TEST: METALS #3
DATE: 06-25-92 AM1
METHOD: NIOSH 7300

TRAVIS AFB
PAINT BOOTH TESTS
ACUREX PROJECT 8485

PAINT: LT GREEN PRIMER
OBJECT: BRAKE PARTS, HUBS, RAMP

D E INITIALS: LJL
Q A INITIALS:

GRID LOC	ACUREX SAMPLE #	BASE SAMPLE #	PUMP #	PRE-CAL (ml/min)	POST-CAL (ml/min)	RUN TIME (min)	LEAD (ug)	ZINC (ug)	STRONTIUM (ug)	CHROMIUM (ug)	AVG FLOW (L/MIN)	LEAD (ug/M3)	ZINC (ug/M3)	STRONTIUM (ug/M3)	CHROMIUM (ug/M3)
				RECIRC	ACETONE	EX921392	< 25	25	2.4	3	1.056	< MDL	23.7	2.3	2.8
					NITRIC	EX921393	12	34	3.3	72	1.056	11.4	32.2	3.1	68.2
					FILTER	EX921348	< 2.5	3.5	< 0.5	13.7	1.056	< MDL	3.3	< MDL	13.0
					IMPINGER	EX921349	< 0.5	58	< 0.2	< 0.2	1.056	< MDL	54.9	< MDL	< MDL

TEST: METALS #3
DATE: 06-25-92 AM1
METHOD: NIOSH 7300
GRID CHART 1 - LEAD

TRAVIS AFB
PAINT BOOTH TESTS
ACUREX PROJECT 8485

D E INITIALS: LJL
Q A INITIALS: 0

Painter Over 0.6

Painter Under < MDL

EXHAUST GRID

1 9.3	2 3.7	3 12.4	4 21.4
5 0.5	6 < MDL	7 < MDL 0.5	8 0.7
9 0.6	10 0.5	11 1.1	12 0.4
21 0.5	22 < MDL	23 < MDL	24 < MDL < MDL
13 < MDL < MDL	14 1.2	15 < MDL	16 < MDL
17 < MDL	18 0.5	19 0.5	20 < MDL

Field Blank 1.9

INLET GRID A

1A 117.6

2A 3.9 1.5

3A 4.5

INLET GRID B

1B 10.8

2B 15.8

3B 17.3

PAINT TYPE: LT GREEN PRIMER
UNITS: ug/M3
GRID MDL: 0.075 ug/SAMPLE
EXHAUST DUCT: < MDL

OBJECT: BRAKE PARTS, HUBS, RAMP
OSHA TWA: 50 ug/M3
PAINTER MDL: 0.075 ug/SAMPLE
RECIRC DUCT: 13.7

TEST: METALS #3
DATE: 06-25-92 AM1
METHOD: NIOSH 7300
GRID CHART 2 - ZINC

TRAVIS AFB
PAINT BOOTH TESTS
ACUREX PROJECT 8485

D E INITIALS: LJL
Q A INITIALS: 0

EXHAUST GRID

1 23.1	2 14.5	3 152.4	4 24.9	
5 25.7	6 9.5	7 10.9 9.4	8 23.4	
9 34.5	10 176.0	11 15.7	12 7.7	
21 11.3	22 10.7	23 8.2	24 14.0 88.2	
13 7.7 15.6	14 27.1	15 17.4	16 41.9	
17 31.9	18 27.8	19 32.3	20 21.6	

Painter Over 19.5

Painter Under 14.6

Field Blank 11.4

INLET GRID A

1A 35.5

2A 11.3
5.1

3A 16.9

INLET GRID B

1B 34.1

2B 28.6

3B 29.9

PAINT TYPE: LT GREEN PRIMER
OBJECT: BRAKE PARTS, HUBS, RAMP

UNITS: ug/M3
OSHA TWA: 1000 ug/

GRID MDL: 0.3 ug/SAMPLE
PAINTER MDL: 0.3 ug/SAMPLE

EXHAUST DUCT: 11.4
RECIRC DUCT: 114.1

TEST: METALS #3
DATE: 06-25-92 AM1
METHOD: NIOSH 7300
GRID CHART 3 - STRONTIUM

TRAVIS AFB
PAINT BOOTH TESTS
ACUREX PROJECT 8485

D E INITIALS: LJL
Q A INITIALS: 0

Painter Over
112.7

Painter Under
< MDL

EXHAUST GRID

1 9.3	2 5.6	3 12.8	4 14.2
5 16.9	6 20.5	7 32.6 27.8	8 25.2
9 66.2	10 177.1	11 149.9	12 69.4
21 98.4	22 258.7	23 146.2	24 72.0 101.8
13 138.5 135.8	14 277.1	15 149.9	16 153.7
17 112.0	18 231.6	19 402.4	20 115.2

Field Blank
1.8

INLET GRID A

1A
< MDL

2A
< MDL
< MDL

3A
< MDL

INLET GRID B

1B
< MDL

2B
< MDL

3B
< MDL

PAINT TYPE: LT GREEN PRIMER UNITS: ug/M3 GRID MDL: 0.3 ug/SAMPLE EXHAUST DUCT: 5.5

OBJECT: BRAKE PARTS, HUBS,OSHA TWA: ?? ug/M3 PAINTER MDL: 0.3 ug/SAMPLE RECIRC DUCT: 5.4

TEST: METALS #3
DATE: 06-25-92 AM1
METHOD: NIOSH 7300
GRID CHART 4 - CHROMIUM

TRAVIS AFB
PAINT BOOTH TESTS
ACUREX PROJECT 8485

D E INITIALS: LJL
Q A INITIALS: 0

Painter Over
67.9

Painter Under
6.8

INLET GRID A

1A
25.0

2A
< MDL
< MDL

3A
< MDL

EXHAUST GRID

1 7.7	2 < MDL	3 10.9	4 15.2
5 11.7	6 32.3	7 28.5 17.1	8 15.8
9 42.9	10 134.4	11 89.4	12 46.3
21 76.6	22 154.8	23 86.8	24 42.9 60.2
13 83.6 81.0	14 165.9	15 91.4	16 92.5
17 65.7	18 139.1	19 240.3	20 69.7

Field Blank
< 4.3

INLET GRID B

1B
< MDL

2B
< MDL

3B
< MDL

PAINT TYPE: LT GREEN PRIMER UNITS: ug/M3 GRID MDL: 0.3 ug/SAMPLE EXHAUST DUCT: 8.0

OBJECT: BRAKE PARTS, HUBS,OSHA TWA: 50 ug/M3 PAINTER MDL: 0.3 ug/SAMPLE RECIRC DUCT: 84.0

TEST: METALS #4
DATE: 06-26-92 AM1
METHOD: NIOSH 7300

TRAVIS AFB
PAINT BOOTH TESTS
ACUREX PROJECT 8485

PAINT: LT GREEN PRIMER
OBJECT: THRUST REVERSER

D E INITIALS: BN & LJL
Q A INITIALS:

GRID LOC	ACUREX SAMPLE #	BASE SAMPLE #	PUMP #	PRE-CAL (ml/min)	POST-CAL (ml/min)	RUN TIME (min)	LEAD (ug)	ZINC (ug)	STRONTIUM (ug)	CHROMIUM (ug)	AVG FLOW (L/MIN)	LEAD (ug/M3)	ZINC (ug/M3)	STRONTIUM (ug/M3)	CHROMIUM (ug/M3)
1	144	EX921242	13	2971	2903	77	< 0.075	0.48	1.11	0.71	2.937	< MDL	2.1	4.9	3.1
2	125	EX921243	28	3029	3012	80	< 0.075	1.04	4.71	2.90	3.021	< MDL	4.3	19.5	12.0
3	122	EX921244	29	3063	3057	80	< 0.075	0.84	28.48	16.83	3.060	< MDL	3.4	116.3	68.7
4	205	EX921245	50	3033	3079	81	< 0.075	1.02	45.36	26.64	3.056	< MDL	4.1	183.2	107.6
5	98	EX921246	15	2988	3003	79	< 0.075	1.17	7.38	4.46	2.996	< MDL	4.9	31.2	18.8
6	110	EX921247	19	3045	2994	79	< 0.075	1.10	31.25	21.71	3.020	< MDL	4.6	131.0	91.0
6 DUP	51	EX921253	24	2988	3018	81	< 0.075	1.08	17.43	10.42	3.003	< MDL	4.4	71.7	42.8
7	141	EX921248	33	3027	3051	81	< 0.075	0.52	83.54	49.76	3.039	< MDL	2.1	339.4	202.1
8	85	EX921249	46	3030	3063	81	< 0.075	0.80	71.88	43.59	3.047	< MDL	3.2	291.3	176.6
9	139	EX921250	6	3018	3063	78	< 0.075	0.42	39.45	22.78	3.041	< MDL	1.8	166.3	96.1
10	84	EX921251	42	3033	3024	80	0.100	2.08	93.64	54.88	3.029	0.4	8.6	386.5	226.5
11	102	EX921252	21	3039	3012	80	0.110	0.52	167.79	96.84	3.026	0.5	2.1	693.2	400.1
11 DUP	63	EX921254	12	2994	3003	81	0.11	0.62	175.76	106.70	2.999	0.5	2.6	723.7	439.3
12	145	EX921255	48	2997	3107	80	0.095	0.50	134.55	77.82	3.052	0.4	2.0	551.1	318.7
21	81	EX921265	4	3045	2977	78	< 0.075	0.48	5.18	29.94	3.011	< MDL	2.0	22.1	127.5
22	142	EX921266	31	2988	2965	80	0.09	0.51	122.61	71.22	2.977	0.4	2.1	514.9	299.1
23	151	EX921267	35	3057	3066	80	0.12	0.57	201.46	114.36	3.062	0.5	2.3	822.6	466.9
24	153	EX921268	53	3015	3091	80	0.11	< 0.30	180.76	104.70	3.053	0.5	< MDL	740.1	428.7
13	159	EX921256	11	3024	3027	79	0.1	3.32	19.18	11.56	3.026	0.4	13.9	80.2	48.4
14	147	EX921257	30	3033	2971	78	0.078	< 0.30	119.78	69.06	3.002	0.3	< MDL	511.5	294.9
15	133	EX921258	32	3024	2928	81	0.19	1.82	204.99	117.51	2.976	0.8	7.6	850.4	487.5
16	86	EX921259	55	2978	3015	80	0.095	0.38	145.74	85.04	2.997	0.4	1.6	608.0	354.7
17	192	EX921260	1	3036	2951	79	< 0.075	0.69	6.69	4.06	2.994	< MDL	2.9	28.3	17.2
18	149	EX921261	18	3024	3018	78	0.077	0.66	45.44	26.90	3.021	0.3	2.8	192.8	114.2
18 DUP	143	EX921262	14	3003	3003	81	< 0.075	0.42	47.67	27.72	3.003	< MDL	1.7	196.0	114.0
19	200	EX921263	49	3048	3072	80	0.098	1.10	107.84	62.74	3.060	0.4	4.5	440.5	256.3
20	114	EX921264	45	3009	3018	81	0.17	1.22	114.36	66.21	3.014	0.7	5.0	468.5	271.2
P over	111	EX921276	34	3048	3003	77	0.098	0.38	157.58	91.44	3.026	0.4	1.6	676.4	392.5
P under	82	EX921277	40	2971	2945	77	< 0.075	0.39	15.87	9.50	2.958	< MDL	1.7	69.7	41.7
1A	70	EX921236	52	3018	3066	77	< 0.075	5.42	0.64	0.54	3.042	< MDL	23.1	2.7	2.3
2A	123	EX921237	54	3021	3045	77	< 0.075	1.23	0.38	0.42	3.033	< MDL	5.3	1.6	1.8
3A	54	EX921238	51	2985	3000	77	< 0.075	2.74	0.32	0.30	2.993	< MDL	11.9	1.4	1.3
1B	148	EX921239	20	2965	2985	76	< 0.075	0.78	0.52	0.51	2.975	< MDL	3.4	2.3	2.3
2B	127	EX921240	17	3015	3009	76	0.1	4.12	0.51	0.44	3.012	0.4	18.0	2.2	1.9
3B	166	EX921241	43	3012	3012	76	< 0.075	1.08	0.52	0.42	3.012	< MDL	4.7	2.3	1.8
F BLANK	158	EX921235	7			79	< 0.075	3.58	< 0.30	< 0.30	3.000	< 0.3	15.1	< 1.3	< 1.3
											0.000	no sample	no sample	no sample	no sample

LOCATION	SAMPLES ACETONE	NITRIC	FILTER	IMPINGER	SAMPLE (CU FT)	LEAD (ug)	ZINC (ug)	STRONTIUM (ug)	CHROMIUM (ug)	SAMPLE (M3)	LEAD (ug/M3)	ZINC (ug/M3)	STRONTIUM (ug/M3)	CHROMIUM (ug/M3)
EXHAUST	EX921447	EX921448	EX921449	EX921450	48.30	0	25.5	16.8	21.58	1.367	< MDL	18.7	12.3	15.8
RECIRC	EX921455	EX921456	EX921457	EX921458	46.09	0	56	14.08	43	1.304	< MDL	42.9	10.8	33.0
			EXHAUST	ACETONE	EX921447	< 2.5	5.2	10.6	6.8	1.367	< MDL	3.8	7.8	5.0
				NITRIC	EX921448	< 0.5	2.3	4.6	3.50	1.367	< MDL	1.7	3.4	2.6
				FILTER	EX921449	< 2.5	< 1.25	1.6	1.88	1.367	< MDL	< MDL	1.2	1.4
				IMPINGER	EX921450	< 0.5	18	< 0.2	9.40	1.367	< MDL	13.2	< MDL	6.9

TEST: METALS #4
DATE: 06-26-92 AM1
METHOD: NIOSH 7300

TRAVIS AFB
PAINT BOOTH TESTS
ACUREX PROJECT 8485

PAINT: LT GREEN PRIMER
OBJECT: THRUST REVERSER

D E INITIALS: BN & LJL
Q A INITIALS:

GRID LOC	ACUREX SAMPLE #	BASE SAMPLE #	PUMP #	PRE-CAL (ml/min)	POST-CAL (ml/min)	RUN TIME (min)	LEAD (ug)	ZINC (ug)	STRONTIUM (ug)	CHROMIUM (ug)	AVG FLOW (L/MIN)	LEAD (ug/M3)	ZINC (ug/M3)	STRONTIUM (ug/M3)	CHROMIUM (ug/M3)
				RECIRC	ACETONE	EX921455	< 2.5	11	3.7	3.6	1.304	< MDL	8.4	2.8	2.8
					NITRIC	EX921456	< 0.5	25	9.6	26.00	1.304	< MDL	19.2	7.4	19.9
					FILTER	EX921457	< 2.5	< 1.25	0.78	1.4	1.304	< MDL	< MDL	0.6	1.1
					IMPINGER	EX921458	< 0.5	20	< 0.2	12.00	1.304	< MDL	15.3	< MDL	9.2

TEST: METALS #4
DATE: 06-26-92 AM1
METHOD: NIOSH 7300

TRAVIS AFB
PAINT BOOTH TESTS
ACUREX PROJECT 8485

D E INITIALS: BN & LJL
Q A INITIALS: 0

GRID CHART 1 - LEAD

Painter Over
0.4

Painter Under
< MDL

EXHAUST GRID

1 < MDL	2 < MDL	3 < MDL	4 < MDL
5 < MDL	6 < MDL < MDL	7 < MDL	8 < MDL
9 < MDL	10 0.4	11 0.5 0.5	12 0.4
21 < MDL	22 0.4	23 0.5	24 0.5
13 0.4	14 0.3	15 0.8	16 0.4
17 < MDL	18 0.3 < MDL	19 0.4	20 0.7

Field Blank
< 0.3

INLET GRID A

1A
< MDL

2A
< MDL

3A
< MDL

INLET GRID B

1B
< MDL

2B
0.4

3B
< MDL

PAINT TYPE: LT GREEN PRIMER UNITS: ug/M3 GRID MDL: 0.075 ug/SAMPLE EXHAUST DUCT: < MDL

OBJECT: THRUST REVERSER OSHA TWA: 50 ug/M3 PAINTER MDL: 0.075 ug/SAMPLE RECIRC DUCT: < MDL

TEST: METALS #4
DATE: 06-26-92 AM1
METHOD: NIOSH 7300

TRAVIS AFB
PAINT BOOTH TESTS
ACUREX PROJECT 8485

D E INITIALS: BN & LJL
Q A INITIALS: 0

GRID CHART 2 - ZINC

Painter Over 1.6

Painter Under 1.7

INLET GRID A

1A 23.1

2A 5.3

3A 11.9

EXHAUST GRID

1 2.1	2 4.3	3 3.4	4 4.1
5 4.9	6 4.6, 4.4	7 2.1	8 3.2
9 1.8	10 8.6	11 2.1, 2.6	12 2.0
21 2.0	22 2.1	23 2.3	24 < MDL
13 13.9	14 < MDL	15 7.6	16 1.6
17 2.9	18 2.8, 1.7	19 4.5	20 5.0

Field Blank 15.1

INLET GRID B

1B 3.4

2B 18.0

3B 4.7

PAINT TYPE: LT GREEN PRIMER
OBJECT: THRUST REVERSER

UNITS: ug/M3
OSHA TWA: 1000 ug/M3

GRID MDL: 0.3 ug/SAMPLE
PAINTER MDL: 0.3 ug/SAMPLE

EXHAUST DUCT: 18.7
RECIRC DUCT: 42.9

TEST: METALS #4
DATE: 06-26-92 AM1
METHOD: NIOSH 7300

TRAVIS AFB
PAINT BOOTH TESTS
ACUREX PROJECT 8485

D E INITIALS: BN & LJL
Q A INITIALS: 0

GRID CHART 3 - STRONTIUM

Painter Over
676.4

Painter Under
69.7

INLET GRID A

1A 2.7

2A 1.6

3A 1.4

EXHAUST GRID

1 4.9	2 19.5	3 116.3	4 183.2
5 31.2	6 131.0 71.7	7 339.4	8 291.3
9 166.3	10 386.5	11 693.2 723.7	12 551.1
21 22.1	22 514.9	23 822.6	24 740.1
13 80.2	14 511.5	15 850.4	16 608.0
17 28.3	18 192.8 196.0	19 440.5	20 468.5

Field Blank
< 1.3

INLET GRID B

1B 2.3

2B 2.2

3B 2.3

PAINT TYPE: LT GREEN PRIMER UNITS: ug/M3 GRID MDL: 0.3 ug/SAMPLE EXHAUST DUCT: 12.3

OBJECT: THRUST REVERSER OSHA TWA: ?? ug/M3 PAINTER MDL: 0.3 ug/SAMPLE RECIRC DUCT: 10.8

TEST: METALS #4
DATE: 06-26-92 AM1
METHOD: NIOSH 7300

TRAVIS AFB
PAINT BOOTH TESTS
ACUREX PROJECT 8485

D E INITIALS: BN & LJL
Q A INITIALS: 0

GRID CHART 4 - CHROMIUM

Painter Over
392.5

Painter Under
41.7

EXHAUST GRID

1 3.1	2 12.0	3 68.7	4 107.6
5 18.8	6 91.0 42.8	7 202.1	8 176.6
9 96.1	10 226.5	11 400.1 439.3	12 318.7
21 127.5	22 299.1	23 466.9	24 428.7
13 48.4	14 294.9	15 487.5	16 354.7
17 17.2	18 114.2 114.0	19 256.3	20 271.2

Field Blank
< 1.3

INLET GRID A

1A 2.3

2A 1.8

3A 1.3

INLET GRID B

1B 2.3

2B 1.9

3B 1.8

PAINT TYPE: LT GREEN PRIMER UNITS: ug/M3 GRID MDL: 0.3 ug/SAMPLE EXHAUST DUCT: 15.8

OBJECT: THRUST REVERSER OSHA TWA: 50 ug/M3 PAINTER MDL: 0.3 ug/SAMPLE RECIRC DUCT: 33.0

TEST: METALS #5
DATE: 06-26-92 AM2
METHOD: NIOSH 7300
Non paint time deducted

TRAVIS AFB
PAINT BOOTH TESTS
ACUREX PROJECT 8485

PAINT: GUNSHIP GRAY POLY
OBJECT: THRUST REVERSER

D E INITIALS: LJL
Q A INITIALS:

GRID LOC	ACUREX SAMPLE #	BASE SAMPLE #	PUMP #	PRE-CAL (ml/min)	POST-CAL (ml/min)	RUN TIME (min)	LEAD (ug)	ZINC (ug)	STRONTIUM (ug)	CHROMIUM (ug)	AVG FLOW (L/MIN)	LEAD (ug/M3)	ZINC (ug/M3)	STRONTIUM (ug/M3)	CHROMIUM (ug/M3)
1	189	EX921137	12	3003	3060	66	< 0.075	0.92	< 0.30	< 0.30	3.032	< MDL	4.6	< MDL	< MDL
2	157	EX921138	48	3033	3039	66	< 0.075	0.34	< 0.30	< 0.30	3.036	< MDL	1.7	< MDL	< MDL
3	188	EX921139	17	3009	3006	66	< 0.075	0.30	< 0.30	< 0.30	3.008	< MDL	1.5	< MDL	< MDL
4	198	EX921140	6	3063	2988	67	< 0.075	0.34	< 0.30	< 0.30	3.026	< MDL	1.7	< MDL	< MDL
5	211	EX921141	28	3012	3015	66	< 0.075	0.46	< 0.30	< 0.30	3.014	< MDL	2.3	< MDL	< MDL
6	206	EX921142	42	3024	3042	66	< 0.075	< 0.30	< 0.30	< 0.30	3.033	< MDL	< MDL	< MDL	< MDL
6 DUP	182	EX921143	45	3018	3042	66	< 0.075	0.48	< 0.30	< 0.30	3.030	< MDL	2.4	< MDL	< MDL
7	177	EX921144	43	3012	2985	66	< 0.075	4.50	< 0.30	< 0.30	2.999	< MDL	22.7	< MDL	< MDL
8	210	EX921145	4	2977	2991	66	< 0.075	0.34	< 0.30	< 0.30	2.984	< MDL	1.7	< MDL	< MDL
9	204	EX921146	21	3012	3021	66	< 0.075	0.54	< 0.30	< 0.30	3.017	< MDL	2.7	< MDL	< MDL
10	136	EX921147	46	3063	3066	66	< 0.075	0.62	< 0.30	< 0.30	3.065	< MDL	3.1	< MDL	< MDL
11	197	EX921148	54	3045	3069	66	< 0.075	7.05	< 0.30	< 0.30	3.057	< MDL	34.9	< MDL	< MDL
12	135	EX921149	20	2985	2991	66	< 0.075	8.42	< 0.30	0.21	2.988	< MDL	42.7	< MDL	1.1
21	194	EX921150	29	3057	3027	66	< 0.075	0.38	< 0.30	< 0.30	3.042	< MDL	1.9	< MDL	< MDL
22	181	EX921151	19	2994	3006	66	< 0.075	0.48	< 0.30	< 0.30	3.000	< MDL	2.4	< MDL	< MDL
23	126	EX921152	55	3015	3009	66	< 0.075	0.76	< 0.30	< 0.30	3.012	< MDL	3.8	< MDL	< MDL
24	134	EX921153	11	3027	3042	68	< 0.075	0.34	< 0.30	< 0.30	3.035	< MDL	1.6	< MDL	< MDL
13	172	EX921154	32	3012	3060	66	< 0.075	0.30	< 0.30	< 0.30	3.036	< MDL	1.5	< MDL	< MDL
14	195	EX921155	31	2965	3000	66	< 0.075	0.57	< 0.30	< 0.30	2.983	< MDL	2.9	< MDL	< MDL
15	203	EX921156	50	3045	3036	66	< 0.075	0.33	< 0.30	0.36	3.041	< MDL	1.6	< MDL	1.8
16	128	EX921157	13	2983	3012	65	< 0.075	0.54	< 0.30	0.41	2.998	< MDL	2.8	< MDL	2.1
17	167	EX921158	33	3051	3060	66	< 0.075	0.69	< 0.30	0.56	3.056	< MDL	3.4	< MDL	2.8
18	171	EX921159	53	3036	3057	66	< 0.075	0.57	< 0.30	< 0.30	3.047	< MDL	2.8	< MDL	< MDL
19	185	EX921160	52	3066	3091	66	< 0.075	2.18	< 0.30	0.34	3.079	< MDL	10.7	< MDL	1.7
20	138	EX921161	18	3018	3012	67	< 0.075	0.66	< 0.30	< 0.30	3.015	< MDL	3.3	< MDL	< MDL
20 DUP	178	EX921162	14	3003	2994	67	< 0.075	0.68	< 0.30	0.30	2.999	< MDL	3.4	< MDL	1.5
P over	168	EX921163	34	3003	3015	54	< 0.075	0.52	0.81	0.57	3.009	< MDL	3.2	5.0	3.5
P under	176	EX921164	40	2945	2940	66	< 0.075	0.56	< 0.30	< 0.30	2.943	< MDL	2.9	< MDL	< MDL
1A	191	EX921131	15	3003	3024	67	< 0.075	0.41	< 0.30	< 0.30	3.014	< MDL	2.0	< MDL	< MDL
2A	186	EX921132	1	2951	3006	67	< 0.075	5.78	< 0.30	< 0.30	2.979	< MDL	29.0	< MDL	< MDL
3A	215	EX921133	24	3018	3048	66	0.088	3.68	< 0.30	< 0.30	3.033	0.4	18.4	< MDL	< MDL
1B	154	EX921134	35	3066	3060	66	< 0.075	0.78	< 0.30 ?	0.09	3.063	< MDL	3.9	< MDL	< MDL
2B	152	EX921135	49	3039	3051	66	< 0.075	0.78	< 0.30	< 0.30	3.045	< MDL	3.9	< MDL	< MDL
3B	187	EX921136	30	2971	2983	66	< 0.075	0.42	< 0.30	< 0.30	2.977	< MDL	2.1	< MDL	< MDL
											0.000	no sample	no sample	no sample	no sample
BLANK											0.000	no sample	no sample	no sample	no sample
											0.000	no sample	no sample	no sample	no sample

LOCATION	SAMPLES ACETONE	NITRIC	FILTER	IMPINGER	SAMPLE (CU FT)	LEAD (ug)	ZINC (ug)	STRONTIUM (ug)	CHROMIUM (ug)	SAMPLE (M3)	LEAD (ug/M3)	ZINC (ug/M3)	STRONTIUM (ug/M3)	CHROMIUM (ug/M3)
EXHAUST	EX921451	EX921452	EX921453	EX921454	49.30	0	51.4	0.93	16.73	1.395	< MDL	36.8	0.7	12.0
RECIRC	EX921459	EX921460	EX921461	EX921462	44.26	5	49.6	0.58	30.83	1.253	4.0	39.6	0.5	24.6

EXHAUST	ACETONE	EX921451	< 2.5	24.0	0.93	1.08	1.395	< MDL	17.2	0.7	0.8
	NITRIC	EX921452	< 0.5	4.1	< 0.2	2.00	1.395	< MDL	2.9	< MDL	1.4
	FILTER	EX921453	< 2.5	1.3	< 0.5	0.65	1.395	< MDL	0.9	< MDL	0.5
	IMPINGER	EX921454	< 0.5	22	< 0.2	13.00	1.395	< MDL	15.8	< MDL	9.3

TEST: METALS #5
DATE: 06-26-92 AM2
METHOD: NIOSH 7300
Non paint time deducted

TRAVIS AFB
PAINT BOOTH TESTS
ACUREX PROJECT 8485

PAINT: GUNSHIP GRAY POLY
OBJECT: THRUST REVERSER

D E INITIALS: LJL
Q A INITIALS:

GRID LOC	ACUREX SAMPLE #	BASE SAMPLE #	PUMP #	PRE-CAL (ml/min)	POST-CAL (ml/min)	RUN TIME (min)	LEAD (ug)	ZINC (ug)	STRONTIUM (ug)	CHROMIUM (ug)	AVG FLOW (L/MIN)	LEAD (ug/M3)	ZINC (ug/M3)	STRONTIUM (ug/M3)	CHROMIUM (ug/M3)
				RECIRC	ACETONE	EX921459	< 2.5	13	0.58	3.2	1.253	< MDL	10.4	0.5	2.6
					NITRIC	EX921460	< 0.5	7.6	< 0.2	7.60	1.253	< MDL	6.1	< MDL	6.1
					FILTER	EX921461	< 2.5	< 1.25	< 0.5	1.03	1.253	< MDL	< MDL	< MDL	0.8
					IMPINGER	EX921462	< 0.5	29	< 0.2	19.00	1.253	< MDL	23.2	< MDL	15.2

TEST: METALS #5
DATE: 06-26-92 AM2
METHOD: NIOSH 7300
Non paint time deducted
GRID CHART 1 - LEAD

TRAVIS AFB
PAINT BOOTH TESTS
ACUREX PROJECT 8485

D E INITIALS: LJL
Q A INITIALS: 0

Painter Over
< MDL

Painter Under
< MDL

INLET GRID A

1A
< MDL

2A
< MDL

3A
0.4

EXHAUST GRID

1 < MDL	2 < MDL	3 < MDL	4 < MDL
5 < MDL	6 < MDL < MDL	7 < MDL	8 < MDL
9 < MDL	10 < MDL	11 < MDL	12 < MDL
21 < MDL	22 < MDL	23 < MDL	24 < MDL
13 < MDL	14 < MDL	15 < MDL	16 < MDL
17 < MDL	18 < MDL	19 < MDL	20 < MDL < MDL

INLET GRID B

18
< MDL

28
< MDL

38
< MDL

PAINT TYPE: GUNSHIP GRAY POLY UNITS: ug/M3
OBJECT: THRUST REVERSER OSHA TWA: 50 ug/M3

GRID MDL: 0.075 ug/SAMPLE
PAINTER MDL: 0.075 ug/SAMPLE

EXHAUST DUCT: < MDL
RECIRC DUCT: 4.0

TEST: METALS #5
DATE: 06-26-92 AM2
METHOD: NIOSH 7300
Non paint time deducted
GRID CHART 2 - ZINC

TRAVIS AFB
PAINT BOOTH TESTS
ACUREX PROJECT 8485

D E INITIALS: LJL
Q A INITIALS: 0

Painter Over 3.2

Painter Under 2.9

INLET GRID A

1A 2.0

2A 29.0

3A 18.4

EXHAUST GRID

1 4.6	2 1.7	3 1.5	4 1.7
5 2.3	6 < MDL 2.4	7 22.7	8 1.7
9 2.7	10 3.1	11 34.9	12 42.7
21 1.9	22 2.4	23 3.8	24 1.6
13 1.5	14 2.9	15 1.6	16 2.8
17 3.4	18 2.8	19 10.7	20 3.3 3.4

INLET GRID B

1B 3.9

2B 3.9

3B 2.1

PAINT TYPE: GUNSHIP GRAY POLY UNITS: ug/M3 GRID MDL: 0.3 ug/SAMPLE EXHAUST DUCT: 36.8

OBJECT: THRUST REVERSER OSHA TWA: 1000 ug/M3 PAINTER MDL: 0.3 ug/SAMPLE RECIRC DUCT: 39.6

TEST: METALS #5
DATE: 06-26-92 AM2
METHOD: NIOSH 7300
Non paint time deducted
GRID CHART 3 - STRONTIUM

TRAVIS AFB
PAINT BOOTH TESTS
ACUREX PROJECT 8485

D E INITIALS: LJL
Q A INITIALS: 0

Painter Over 5.0

Painter Under < MDL

EXHAUST GRID

1 < MDL	2 < MDL	3 < MDL	4 < MDL
5 < MDL	6 < MDL < MDL	7 < MDL	8 < MDL
9 < MDL	10 < MDL	11 < MDL	12 < MDL
21 < MDL	22 < MDL	23 < MDL	24 < MDL
13 < MDL	14 < MDL	15 < MDL	16 < MDL
17 < MDL	18 < MDL	19 < MDL	20 < MDL < MDL

INLET GRID A

1A < MDL

2A < MDL

3A < MDL

INLET GRID B

1B < MDL

2B < MDL

3B < MDL

PAINT TYPE: GUNSHIP GRAY POLY UNITS: ug/M3 GRID MDL: 0.3 ug/SAMPLE EXHAUST DUCT: 0.7

OBJECT: THRUST REVERSER OSHA TWA: 50 ug/M3 PAINTER MDL: 0.3 ug/SAMPLE RECIRC DUCT: 0.5

TEST: METALS #5
DATE: 06-26-92 AM2
METHOD: NIOSH 7300
Non paint time deducted
GRID CHART 4 - CHROMIUM

TRAVIS AFB
PAINT BOOTH TESTS
ACUREX PROJECT 8485

D E INITIALS: LJL
Q A INITIALS: 0

Painter Over
3.5

Painter Under
< MDL

EXHAUST GRID

1 < MDL	2 < MDL	3 < MDL	4 < MDL
5 < MDL	6 < MDL < MDL	7 < MDL	8 < MDL
9 < MDL	10 < MDL	11 < MDL	12 1.1
21 < MDL	22 < MDL	23 < MDL	24 < MDL
13 < MDL	14 < MDL	15 1.8	16 2.1
17 2.8	18 < MDL	19 1.7	20 < MDL 1.5

INLET GRID A

1A < MDL

2A < MDL

3A < MDL

INLET GRID B

1B < MDL

2B < MDL

3B < MDL

PAINT TYPE: GUNSHIP GRAY POLY UNITS: ug/M3
OBJECT: THRUST REVERSER OSHA TWA: 50 ug/M3

GRID MDL: 0.3 ug/SAMPLE
PAINTER MDL: 0.3 ug/SAMPLE

EXHAUST DUCT: 12.0
RECIRC DUCT: 24.6

TEST: ISOCYANATES #1 TRAVIS AFB PAINT: WHITE TOPCOAT D E by: BN
DATE: 06-23-92 AM PAINT BOOTH TESTS OBJECT: COMFORT PALLET Q A by:
METHOD: OSHA 42/NIOSH 5521 Printed: 24-Sep

GRID LOC	ACUREX FILTER #	BASE SAMPLE #	PUMP #	PRE-CAL (ml/min)	POST-CAL (ml/min)	RUN TIME (min)	HDI (ug)	AVG FLOW (L/MIN)	HDI (ug/M3)
1	19	EX920714	41	927	920	60	ND	0.924	< MDL
2	21	EX920715	13	979	1058	58	ND	1.019	< MDL
3	9	EX920716	4	1009	1000	60	ND	1.005	< MDL
4	4	EX920717	35	974	990	60	ND	0.982	< MDL
5	14	EX920718	33	999	1018	60	ND	1.009	< MDL
6	20	EX920719	12	945	977	60	ND	0.961	< MDL
7	6	EX920720	20	975	981	60	ND	0.978	< MDL
8	13	EX920721	29	992	975	60	ND	0.984	< MDL
9	12	EX920722	15	993	1019	60	ND	1.006	< MDL
10	5	EX920723	18	969	987	60	ND	0.978	< MDL
11	8	EX920724	10	987	1056	61	ND	1.022	< MDL
12	17	EX920725	14	945	945	60	ND	0.945	< MDL
12 DUP	25	EX920739	43	995	970	60	ND	0.983	< MDL
21	33	EX920726	11	1001	1036	60	ND	1.019	< MDL
22	16	EX920727	24	979	1015	60	ND	0.997	< MDL
23	10	EX920728	9	993	1045	62	ND	1.019	< MDL
24	1	EX920729	34	993	985	60	ND	0.989	< MDL
13	30	EX920730	40	995	1011	60	ND	1.003	< MDL
14	23	EX920731	2	993	1040	46	ND	1.017	< MDL
15	31	EX920732	25	935	971	60	ND	0.953	< MDL
15 DUP	35	EX920738	42	1003	1008	60	ND	1.006	< MDL
16	26	EX920733	5	990	1004	61	ND	0.997	< MDL
17	27	EX920734	1	990	1005	60	ND	0.998	< MDL
18	34	EX920735	17	990	996	60	ND	0.993	< MDL
19	24	EX920736	7	952	1160	60	ND	1.056	< MDL
20	22	EX920737	23	1034	1056	60	ND	1.045	< MDL
P over	0051imp	EX920051	19	984	963	59	16	0.974	278.6
P under	0050imp	EX920050	30	962	1024	59	0.2	0.993	3.4
1A	18	EX920708	3	990	987	59	ND	0.989	< MDL
2A	29	EX920709	28	970	981	59	ND	0.976	< MDL
3A	28	EX920710	27	965	963	59	ND	0.964	< MDL
1B	11	EX920711	32	948	929	59	ND	0.939	< MDL
2B	32	EX920712	31	937	932	59	ND	0.935	< MDL
3B	15	EX920713	22	942	995	52	ND	0.969	< MDL
F BLANK								0.000	no sample
EXHAUST I	0049imp	EX920049	36	915	939	51	0.8	0.927	16.9
RECIRC I	0048imp	EX920048	37	951	1053	52	0.9	1.002	17.3

TEST: ISOCYANATES #1
DATE: 06-23-92 AM
METHOD: OSHA 42/NIOSH 5521

TRAVIS AFB
PAINT BOOTH TESTS

D E INITIALS: BN
Q A INITIALS: 0

GRID CHART 4 - HDI

Painter Over 278.6

Painter Under 3.4

INLET GRID A

1A < MDL

2A < MDL

3A < MDL

EXHAUST GRID

1 < MDL	2 < MDL	3 < MDL	4 < MDL
5 < MDL	6 < MDL	7 < MDL	8 < MDL
9 < MDL	10 < MDL	11 < MDL	12 < MDL < MDL
21 < MDL	22 < MDL	23 < MDL	24 < MDL
13 < MDL	14 < MDL	15 < MDL < MDL	16 < MDL
17 < MDL	18 < MDL	19 < MDL	20 < MDL

INLET GRID B

1B < MDL

2B < MDL

3B < MDL

PAINT TYPE: WHITE TOPCOAT
OBJECT: COMFORT PALLET

UNITS: ug/M3
OSHA TWA: 40 ug/M3

GRID MDL: 0.5 ug/SAMPLE
PAINTER MDL: 0.05 ug/SAMPLE

EXHAUST DUCT: 16.9
RECIRC DUCT: 17.3

TEST: ISOCYANATES #2 PAINT: WHITE TOPCOAT DE by: LJL
DATE: 06-25-92 AM2 OBJECT: BRAKE PARTS & RAMP QA by:
METHOD: OSHA 42/NIOSH 5521 Printed: 24-Sep

TRAVIS AFB PAINT BOOTH TESTS

GRID LOC	ACUREX FILTER #	BASE SAMPLE #	PUMP #	PRE-CAL (ml/min)	POST-CAL (ml/min)	RUN TIME (min)	HDI (ug)	AVG FLOW (L/MIN)	HDI (ug/M3)
1	65	EX920683	41	948	964	66	ND	0.956	< MDL
2	60	EX920684	15	993	1005	67	ND	0.999	< MDL
3	54	EX920685	23	1040	1048	66	ND	1.044	< MDL
4	36	EX920686	28	991	1006	65	ND	0.9985	< MDL
5	70	EX920687	20	968	972	66	ND	0.97	< MDL
6	63	EX920688	31	1002	1000	66	ND	1.001	< MDL
7	69	EX920689	16	979	1000	66	ND	0.9895	< MDL
7 DUP	53	EX920690	4	1096	1093	66	ND	1.0945	< MDL
8	51	EX920691	1	1000	981	66	ND	0.9905	< MDL
9	2	EX920692	12	941	973	66	ND	0.957	< MDL
10	56	EX920693	14	1023	1078	66	ND	1.0505	< MDL
11	64	EX920694	17	998	1005	66	ND	1.0015	< MDL
12	38	EX920695	40	990	995	65	ND	0.9925	< MDL
21	58	EX920696	25	995	1019	66	ND	1.007	< MDL
22	39	EX920697	43	1007	993	66	ND	1	< MDL
23	42	EX920698	29	1013	1020	65	ND	1.0165	< MDL
24	68	EX920699	10	988	973	66	ND	0.9805	< MDL
24 DUP	3	EX920700	18	1017	1026	66	ND	1.0215	< MDL
13	61	EX920701	11	982	1008	67	ND	0.995	< MDL
13 DUP	49	EX920702	22	971	1036	57	ND	1.0035	< MDL
14	57	EX920703	13	964	1014	64	0.8	0.989	12.6
15	50	EX920704	21	1000	1003	65	ND	1.0015	< MDL
16	48	EX920705	24	970	1017	66	ND	0.9935	< MDL
17	44	EX920706	7	988	1014	66	ND	1.001	< MDL
18	55	EX920707	42	1019	1016	65	ND	1.0175	< MDL
19	7	EX920740	5	1007	1010	66	ND	1.0085	< MDL
20	47	EX920673	34	1048	1052	65	ND	1.05	< MDL
P over	0060imp	EX920060	33	1045	1060	65	3	1.0525	43.9
P under	0062imp	EX920062	35	1005	1016	65	0.2	1.0105	3.0
1A	66	EX920677	3	993	975	66	ND	0.984	< MDL
2A	46	EX920678	6	1000	1008	66	ND	1.004	< MDL
3A	62	EX920679	27	1057	1071	66	ND	1.064	< MDL
1B	52	EX920680	30	981	999	65	ND	0.99	< MDL
2B	43	EX920681	19	1008	1015	66	ND	1.0115	< MDL
3B	40	EX920682	8	980	959	66	ND	0.9695	< MDL
F BLANK	45	EX920676	26	1000.2	1012.114	65.48571	0.5	1.006157	7.6
EXHAUST C	67	EX920671	2	1007	1039	58	ND	1.023	< MDL
RECIRC C	37	EX920672	32	1013	996	59	ND	1.0045	< MDL
EXHAUST I	0063imp	EX920063	36	1058	1038	58	2	1.048	32.9
RECIRC I	0061imp	EX920061	39	1003	1069	59	0.2	1.036	3.3

TEST: ISOCYANATES #2
DATE: 06-25-92 AM2
METHOD: OSHA 42 & NIOSH 5521

TRAVIS AFB
PAINT BOOTH TESTS

D E INITIALS: 0
Q A INITIALS: 0
printed: 24-Sep

GRID CHART 3 - HDI

EXHAUST GRID

Painter Over 43.9 Painter Under 3.0	1 < MDL	2 < MDL	3 < MDL	4 < MDL	Field Blank 7.6 Nominal value
INLET GRID A	5 < MDL	6 < MDL	7 < MDL < MDL	8 < MDL	INLET GRID B
1A < MDL	9 < MDL	10 < MDL	11 < MDL	12 < MDL	1B < MDL
2A < MDL	21 < MDL	22 < MDL	23 < MDL	24 < MDL < MDL	2B < MDL
3A < MDL	13 < MDL < MDL	14 12.6	15 < MDL	16 < MDL	3B < MDL
	17 < MDL	18 < MDL	19 < MDL	20 < MDL	

PAINT TYPE: WHITE TOPCOAT
OBJECT: BRAKE PARTS & RAMP

UNITS: ug/M3
OSHA TWA: 40 ug/M3

GRID MDL: 0.5 ug/SAMPLE
PAINTER MDL: 0.05 ug/SAMPLE

EXHAUST DUCT: < MDL CASSETTE
32.9 IMPINGER
RECIRC DUCT: < MDL CASSETTE
3.3 IMPINGER

TEST: ISOCYANATES #3 | TRAVIS AFB | PAINT: CAMEL GRAY | D E INITIALS: LJL
DATE: 06-25-92 PM | PAINT BOOTH TESTS | OBJECT: AIR SPLITTERS | Q A INITIALS:
METHOD: OSHA 42 & NIOSH 5521 | ACUREX PROJECT 8463

GRID LOC	ACUREX FILTER#	BASE SAMPLE #	PUMP #	PRE-CAL (ml/min)	POST-CAL (ml/min)	RUN TIME (min)	TDI (ug)	MDI (ug)	HDI (ug)	AVG FLOW (L/MIN)	TDI (ug/M3)	MDI (ug/M3)	HDI (ug/M3)
1	73	EX920537	13	1014	1018	56	ND	ND	ND	1.016	< MDL	< MDL	< MDL
2	94	EX920538	12	973	978	58	ND	ND	ND	0.9755	< MDL	< MDL	< MDL
3	77	EX920539	28	1006	1011	57	ND	ND	ND	1.0085	< MDL	< MDL	< MDL
4	78	EX920540	24	1017	1029	58	ND	ND	ND	1.023	< MDL	< MDL	< MDL
5	84	EX920541	31	1000	1001	57	ND	ND	ND	1.0005	< MDL	< MDL	< MDL
6	88	EX920542	21	1003	997	58	ND	ND	ND	1	< MDL	< MDL	< MDL
6 DUP	89	EX920567	11	1008	1008	58	ND	ND	ND	1.008	< MDL	< MDL	< MDL
7	82	EX920543	1	981	980	58	ND	ND	ND	0.9805	< MDL	< MDL	< MDL
8	79	EX920544	20	972	968	58	ND	ND	ND	0.97	< MDL	< MDL	< MDL
9	92	EX920545	14	1078	1074	58	ND	ND	ND	1.076	< MDL	< MDL	< MDL
10	85	EX920546	29	1020	1016	58	ND	ND	ND	1.018	< MDL	< MDL	< MDL
11	91	EX920547	4	1093	1104	58	ND	ND	ND	1.0985	< MDL	< MDL	< MDL
11 DUP	86	EX920568	22	1036	1067	50	ND	ND	ND	1.0515	< MDL	< MDL	< MDL
12	95	EX920548	41	964	951	59	ND	ND	ND	0.9575	< MDL	< MDL	< MDL
21	76	EX920557	23	1048	1046	58	ND	ND	ND	1.047	< MDL	< MDL	< MDL
22	97	EX920558	16	1000	1002	58	ND	ND	ND	1.001	< MDL	< MDL	< MDL
23	71	EX920559	10	973	1045	58	ND	ND	ND	1.009	< MDL	< MDL	< MDL
24	98	EX920560	25	1019	1024	58	ND	ND	ND	1.0215	< MDL	< MDL	< MDL
13	96	EX920549	15	1005	1004	58	ND	ND	ND	1.0045	< MDL	< MDL	< MDL
14	101	EX920550	17	1005	1000	58	ND	ND	ND	1.0025	< MDL	< MDL	< MDL
14 DUP	100	EX920569	7	1014	1017	58	ND	ND	ND	1.0155	< MDL	< MDL	< MDL
15	87	EX920551	18	1026	1024	58	ND	ND	ND	1.025	< MDL	< MDL	< MDL
16	99	EX920552	34	1052	1050	58	ND	ND	ND	1.051	< MDL	< MDL	< MDL
17	103	EX920553	43	993	995	58	ND	ND	ND	0.994	< MDL	< MDL	< MDL
18	93	EX920554	42	1016	1013	57	ND	ND	0.6	1.0145	< MDL	< MDL	10.4
19	80	EX920555	5	1010	1003	59	ND	ND	ND	1.0065	< MDL	< MDL	< MDL
20	90	EX920556	40	995	989	57	ND	ND	ND	0.992	< MDL	< MDL	< MDL
P over	0054imp	EX920054	35	1016	1022	57	ND	ND	1	1.019	< MDL	< MDL	17.2
P under	0055imp	EX920055	33	1060	1063	57	ND	ND	0.2	1.0615	< MDL	< MDL	3.3
1A	83	EX920561	6	1008	1009	58	ND	ND	ND	1.0085	< MDL	< MDL	< MDL
2A	102	EX920562	27	1071	1073	58	ND	ND	ND	1.072	< MDL	< MDL	< MDL
3A	75	EX920563	3	975	986	58	ND	ND	ND	0.9805	< MDL	< MDL	< MDL
1B	74	EX920564	30	999	996	58	ND	ND	ND	0.9975	< MDL	< MDL	< MDL
2B	72	EX920565	19	1015	1008	58	ND	ND	ND	1.0115	< MDL	< MDL	< MDL
3B	105	EX920566	8	959	978	58	ND	ND	ND	0.9685	< MDL	< MDL	< MDL
F BLANK										0	no sample	no sample	no sample
EXHAUST C	104	EX920535	2	1039	1061	51	ND	ND	ND	1.05	< MDL	< MDL	< MDL
RECIRC C	81	EX920536	32	996	989	52	ND	ND	ND	0.9925	< MDL	< MDL	< MDL
EXHAUST I	37imp	EX920037	36	1038	1058	51	ND	ND	0.5	1.048	< MDL	< MDL	9.4
RECIRC I	39imp	EX920039	39	1069	1086	52	ND	ND	0.2	1.0775	< MDL	< MDL	3.6

TEST: ISOCYANATES #3
DATE: 06-25-92 PM
METHOD: OSHA 42 & NIOSH 5521

TRAVIS AFB
PAINT BOOTH TESTS
ACUREX PROJECT 8463

D E INITIALS: 0
Q A INITIALS: 0

GRID CHART 3 - HDI

Painter Over
17.2

Painter Under
3.3

INLET GRID A

1A
< MDL

2A
< MDL

3A
< MDL

EXHAUST GRID

1 < MDL	2 < MDL	3 < MDL	4 < MDL
5 < MDL	6 < MDL < MDL	7 < MDL	8 < MDL
9 < MDL	10 < MDL	11 < MDL < MDL	12 < MDL
21 < MDL	22 < MDL	23 < MDL	24 < MDL
13 < MDL	14 < MDL < MDL	15 < MDL	16 < MDL
17 < MDL	18 10.4	19 < MDL	20 < MDL

INLET GRID B

1B
< MDL

2B
< MDL

3B
< MDL

TEST: ISOCYANATES #4 | TRAVIS AFB | PAINT: DARK GRAY TOPCOAT | D E INITIALS: LJL
DATE: 06-30-92 AM1 | PAINT BOOTH TESTS | OBJECT: QEC PANELS (PLANE SIDING) | Q A INITIALS:
METHOD: OSHA 42 & NIOSH 5521 | ACUREX PROJECT 8463

GRID LOC	ACUREX SAMPLE #	BASE SAMPLE #	PUMP #	PRE-CAL (ml/min)	POST-CAL (ml/min)	RUN TIME (min)	TDI (ug)	MDI (ug)	HDI (ug)	AVG FLOW (L/MIN)	TDI (ug/M3)	MDI (ug/M3)	HDI (ug/M3)
1	148	EX920578	14	970	950	61	ND	ND	ND	0.96	< MDL	< MDL	< MDL
2	156	EX920579	45	1042	1014	61	ND	ND	ND	1.028	< MDL	< MDL	< MDL
3	159	EX920580	34	1010	994	61	ND	ND	ND	1.002	< MDL	< MDL	< MDL
4	151	EX920581	31	1054	1066	61	ND	ND	ND	1.06	< MDL	< MDL	< MDL
5	174	EX920582	1	990	944	62	ND	ND	ND	0.967	< MDL	< MDL	< MDL
6	152	EX920583	19	1023	1001	61	ND	ND	ND	1.012	< MDL	< MDL	< MDL
6 DUP	155	EX920584	51	1031	994	61	ND	ND	ND	1.0125	< MDL	< MDL	< MDL
7	157	EX920585	17	1023	1263	61	ND	ND	ND	1.143	< MDL	< MDL	< MDL
8	147	EX920586	49	993	980	61	ND	ND	ND	0.9865	< MDL	< MDL	< MDL
9	154	EX920587	11	1017	1032	62	ND	ND	ND	1.0245	< MDL	< MDL	< MDL
10	173	EX920588	55	1021	988	61	ND	ND	ND	1.0045	< MDL	< MDL	< MDL
11	168	EX920589	43	1021	977	61	ND	ND	ND	0.999	< MDL	< MDL	< MDL
12	165	EX920590	13	987	1002	60	ND	ND	ND	0.9945	< MDL	< MDL	< MDL
21	169	EX920591	25	1023	1056	61	ND	ND	ND	1.0395	< MDL	< MDL	< MDL
22	160	EX920592	21	1029	1005	61	ND	ND	ND	1.017	< MDL	< MDL	< MDL
23	150	EX920593	18	1011	996	61	ND	ND	ND	1.0035	< MDL	< MDL	< MDL
24	145	EX920594	54	1030	998	61	ND	ND	ND	1.014	< MDL	< MDL	< MDL
13	164	EX920595	24	985	1033	61	ND	ND	ND	1.009	< MDL	< MDL	< MDL
14	172	EX920596	42	1020	1004	61	ND	ND	0.5	1.012	< MDL	< MDL	8.1
15	162	EX920597	28	1045	1019	61	ND	ND	0.8	1.032	< MDL	< MDL	12.7
16	153	EX920598	16	1046	1060	61	ND	ND	ND	1.053	< MDL	< MDL	< MDL
17	171	EX920599	5	1021	1004	62	ND	ND	ND	1.0125	< MDL	< MDL	< MDL
18	161	EX920600	32	1015	982	61	ND	ND	ND	0.9985	< MDL	< MDL	< MDL
19	163	EX920601	50	1015	982	61	ND	ND	0.5	0.9985	< MDL	< MDL	8.2
20	175	EX920602	29	1037	1006	61	ND	ND	ND	1.0215	< MDL	< MDL	< MDL
20 DUP	167	EX920603	30	1045	1025	61	ND	ND	ND	1.035	< MDL	< MDL	< MDL
P over	58imp	EX920058	48	997	985	61	ND	ND	1	0.991	< MDL	< MDL	16.5
P under	59imp	EX920059	46	987	974	61	ND	ND	ND	0.9805	< MDL	< MDL	< MDL
1A	143	EX920571	47	1011	1001	61	ND	ND	ND	1.006	< MDL	< MDL	< MDL
2A	149	EX920572	12	949	964	61	ND	ND	ND	0.9565	< MDL	< MDL	< MDL
3A	166	EX920573	33	1016	1004	61	ND	ND	ND	1.01	< MDL	< MDL	< MDL
1B	158	EX920574	40	1028	1015	61	ND	ND	ND	1.0215	< MDL	< MDL	< MDL
1B DUP	141	EX920575	6	1033	1039	61	ND	ND	ND	1.036	< MDL	< MDL	< MDL
2B	170	EX920576	35	1033	1036	61	ND	ND	ND	1.0345	< MDL	< MDL	< MDL
3B	142	EX920577	20	955	941	61	ND	ND	ND	0.948	< MDL	< MDL	< MDL
F BLANK	0040imp	EX920040		nominal values		60	ND	ND	0.2	1	< MDL	< MDL	3.3
F BLANK	146	EX920570	9	nominal values		60	ND	ND	ND	1	< MDL	< MDL	< MDL
EXHAUST C	144	EX920532	52	1002	994	55	ND	ND	ND	0.998	< MDL	< MDL	< MDL
RECIRC C	214	EX920531	53	998	960	55	ND	ND	ND	0.979	< MDL	< MDL	< MDL
EXHAUST I	57imp	EX920057	36	961	952	55	ND	ND	1	0.9565	< MDL	< MDL	19.0
RECIRC I	56imp	EX920056	39	962	940	55	ND	ND	0.2	0.951	< MDL	< MDL	3.8

TEST: ISOCYANATES #4
DATE: 06-30-92 AM1
METHOD: OSHA 42 & NIOSH 5521
GRID CHART 4 - HDI

TRAVIS AFB
PAINT BOOTH TESTS
ACUREX PROJECT 8463

D E INITIALS: LJL
Q A INITIALS:

EXHAUST GRID

Painter Over 16.5 Painter Under < MDL	1 < MDL	2 < MDL	3 < MDL	4 < MDL	Field Blank IMP 3.3 FILT < MDL nominal values
INLET GRID A	5 < MDL	6 < MDL < MDL	7 < MDL	8 < MDL	INLET GRID B
1A < MDL	9 < MDL	10 < MDL	11 < MDL	12 < MDL	1B < MDL < MDL
2A < MDL	21 < MDL	22 < MDL	23 < MDL	24 < MDL	2B < MDL
3A < MDL	13 < MDL	14 8.1	15 12.7	16 < MDL	3B < MDL
	17 < MDL	18 < MDL	19 8.2	20 < MDL < MDL	

PAINT TYPE: DARK GRAY TOPCOAT UNITS: ug/M3 GRID MDL: 0.5 ug/SAMPLE EXHAUST DUCT: < MDL CASSETTE
19.0 IMPINGER

OBJECT: QEC PANELS (PLANE SIDING) OSHA TWA: 40 ug/M3 PAINTER MDL: 0.05 ug/SAMPLE RECIRC DUCT: < MDL CASSETTE
3.8 IMPINGER

Note: The field (solution) blank for NIOSH 5521 (used on the painter and duct samples) contained 0.2 ug, or a nominal 3.3 ug/M3 for a 60 minute test at 1 liter/min. The sample levels here are calculated in terms of actual volume and time.

TEST: ISOCYANATES #5 | TRAVIS AFB | PAINT: PRIMER | D E INITIALS: LJL
DATE: 06-30-92 AM2 | PAINT BOOTH TESTS | OBJECT: PLANE ENGINE | Q A INITIALS:
METHOD: OSHA 42 & NIOSH 5521 | ACUREX PROJECT 8463

GRID LOC	ACUREX SAMPLE #	BASE SAMPLE #	PUMP #	PRE-CAL (ml/min)	POST-CAL (ml/min)	RUN TIME (min)	TDI (ug)	MDI (ug)	HDI (ug)	AVG FLOW (L/MIN)	TDI (ug/M3)	MDI (ug/M3)	HDI (ug/M3)
1	116	EX920610	30	1025	1013	56	ND	ND	ND	1.019	< MDL	< MDL	< MDL
2	139	EX920611	40	1015	1010	56	ND	ND	ND	1.0125	< MDL	< MDL	< MDL
3	140	EX920612	14	950	952	57	ND	ND	ND	0.951	< MDL	< MDL	< MDL
3 DUP	107	EX920613	25	1056	1066	57	ND	ND	ND	1.061	< MDL	< MDL	< MDL
4	124	EX920614	1	944	952	57	ND	ND	ND	0.948	< MDL	< MDL	< MDL
5	131	EX920615	6	1039	1071	56	ND	ND	ND	1.055	< MDL	< MDL	< MDL
6	121	EX920616	47	1001	1000	56	ND	ND	ND	1.0005	< MDL	< MDL	< MDL
7	126	EX920617	17	954	947	56	ND	ND	ND	0.9505	< MDL	< MDL	< MDL
8	115	EX920618	32	982	1007	56	ND	ND	ND	0.9945	< MDL	< MDL	< MDL
9	122	EX920619	13	1002	1010	55	ND	ND	ND	1.006	< MDL	< MDL	< MDL
10	114	EX920620	20	941	955	56	ND	ND	ND	0.948	< MDL	< MDL	< MDL
11	130	EX920621	28	1019	1037	56	ND	ND	ND	1.028	< MDL	< MDL	< MDL
12	129	EX920622	21	1005	1013	56	ND	ND	ND	1.009	< MDL	< MDL	< MDL
21	120	EX920623	16	1060	1076	56	ND	ND	ND	1.068	< MDL	< MDL	< MDL
22	109	EX920624	34	994	996	56	ND	ND	ND	0.995	< MDL	< MDL	< MDL
22 DUP	134	EX920625	5	1004	1001	57	ND	ND	ND	1.0025	< MDL	< MDL	< MDL
23	135	EX920626	33	1004	1008	56	ND	ND	ND	1.006	< MDL	< MDL	< MDL
24	123	EX920627	42	1004	1009	56	ND	ND	ND	1.0065	< MDL	< MDL	< MDL
13	108	EX920628	29	1006	1011	56	ND	ND	ND	1.0085	< MDL	< MDL	< MDL
14	125	EX920629	12	964	986	56	ND	ND	ND	0.975	< MDL	< MDL	< MDL
15	110	EX920630	18	996	1000	56	ND	ND	ND	0.998	< MDL	< MDL	< MDL
16	127	EX920631	45	1014	1033	57	ND	ND	ND	1.0235	< MDL	< MDL	< MDL
17	136	EX920632	35	1036	1031	56	ND	ND	ND	1.0335	< MDL	< MDL	< MDL
17 DUP	138	EX920633	11	1032	1029	57	ND	ND	ND	1.0305	< MDL	< MDL	< MDL
18	111	EX920634	43	977	992	56	ND	ND	ND	0.9845	< MDL	< MDL	< MDL
19	133	EX920635	50	982	975	56	ND	ND	ND	0.9785	< MDL	< MDL	< MDL
20	118	EX920636	24	1033	1050	57	ND	ND	ND	1.0415	< MDL	< MDL	< MDL
P over	41imp	EX920041	48	985	994	56	ND	ND	0.2	0.9895	< MDL	< MDL	3.6
P under	42imp	EX920042	46	974	996	56	ND	ND	0.2	0.985	< MDL	< MDL	3.6
1A	128	EX920604	31	1066	1063	56	ND	ND	ND	1.0645	< MDL	< MDL	< MDL
2A	137	EX920605	49	980	984	56	ND	ND	ND	0.982	< MDL	< MDL	< MDL
3A	119	EX920606	54	998	997	56	ND	ND	ND	0.9975	< MDL	< MDL	< MDL
1B	106	EX920607	19	1001	1000	56	ND	ND	ND	1.0005	< MDL	< MDL	< MDL
2B	117	EX920608	51	994	1030	56	ND	ND	ND	1.012	< MDL	< MDL	< MDL
3B	112	EX920609	55	988	984	56	ND	ND	ND	0.986	< MDL	< MDL	< MDL
F BLANK	113	EX920534	9	0	0	60	ND	ND	ND	1	< MDL	< MDL	< MDL
EXHAUST I	43imp	EX920043	36	952	956	51	ND	ND	0.2	0.954	< MDL	< MDL	4.1
EXH I dup	44imp	EX920044	52	985	1082	51	ND	ND	0.2	1.0335	< MDL	< MDL	3.8
RECIRC C	132	EX920533	53	960	996	52	ND	ND	ND	0.978	< MDL	< MDL	< MDL
RECIRC I	45imp	EX920045	39	940	1010	52	ND	ND	0.2	0.975	< MDL	< MDL	3.9

TEST: ISOCYANATES #5
DATE: 06-30-92 AM2
METHOD: OSHA 42 & NIOSH 5521

TRAVIS AFB
PAINT BOOTH TESTS
ACUREX PROJECT 8463

D E INITIALS: LJL
Q A INITIALS: 0

GRID CHART 3 - HDI

Painter Over
3.6

Painter Under
3.6

INLET GRID A

1A
< MDL

2A
< MDL

3A
< MDL

EXHAUST GRID

1 < MDL	2 < MDL	3 < MDL < MDL	4 < MDL
5 < MDL	6 < MDL	7 < MDL	8 < MDL
9 < MDL	10 < MDL	11 < MDL	12 < MDL
21 < MDL	22 < MDL < MDL	23 < MDL	24 < MDL
13 < MDL	14 < MDL	15 < MDL	16 < MDL
17 < MDL < MDL	18 < MDL	19 < MDL	20 < MDL

Field Blank
< MDL

INLET GRID B

1B
< MDL

2B
< MDL

3B
< MDL

PAINT TYPE: PRIMER

OBJECT: PLANE ENGINE

UNITS: ug/M3

OSHA TWA: 40 ug/M3

GRID MDL: 0.5 ug/SAMPLE

PAINTER MDL: 0.05 ug/SAMPLE

EXHAUST DUCT: 4.1 IMPINGER
EXHAUST DUCT DUP: 3.8 IMPINGER
RECIRC DUCT: < MDL CASSETTE
3.9 IMPINGER

Note: Primer does not contain isocyanates, however, the field (solution) blank for NIOSH 5521 (used on the painter and duct samples) contained 0.2 ug, or a nominal 3.3 ug/M3 for a 60 minute test at 1 liter/min. The level seen on the painter and duct samples here is the same 0.2 ug/sample calcualted in terms of the volume sampled.

APPENDIX H

QUALITY ASSURANCE/QUALITY CONTROL EVALUATION

A number of quality assurance/quality control (QA/QC) procedures were followed to assess the quality of the reported data. The data quality objectives (DQOs) are listed in Table H-1. The DQOs, defined in terms of measurement accuracy, precision, and completeness. were originally outlined in the Quality Assurance Project Plan (Reference 1). In response to the EPA QA review (Reference 2), the DQOs were subsequently revised and submitted in the Acurex Environmental letter dated 6 May 1992 (Reference 3). The high variability of normal booth operations causes difficulty in establishing DQOs.

A. ASSESSMENT OF OVERALL DATA QUALITY

The DQO results are presented in Table H-2. Nearly all DQOs were achieved. Some objectives, for the integrated sampling, were not met for side-by-side duplicate samples taken at specific sampling locations. The variability detected from side-by-side duplicate analyses was due to sample orientation. Great effort was expended to ensure that the duplicate VOC, particulate, isocyanates, and metals sample systems had identical orientations. However, some samplers shifted slightly during painting.

1. Precision

To ensure data precision, air flow rate anemometer measurements at the booth exhaust and intake faces were obtained following each test. Duplicate anemometer measurements were taken at one randomly selected grid site per test. Split-flow duct flow rate measurements were taken according to EPA Method 2 prior to each sampling event. A duplicate measurement was taken every 2 days. Due to cyclonic flow patterns in the recirculation duct, it was not possible to measure the flow rate of the recirculated airstream using EPA Method 2. Therefore, the precision is undefinable.

To assess the precision of CEM sampling, the periodic zero, span, and reference gas response results were compared.

To assess precision of the integrated pollutant concentration measurements in the booth, duplicate samples were collected during each sampling event. Because sample collection occurred under dynamic operating conditions, a side-by-side sampling strategy was adopted to generate the required duplicates. The side-by-side samples were located and oriented as close to identically as possible, but under normal booth operating conditions the sampling system often shifted during the test. For this reason, the RPD at specific sampling locations was observed to be as high as 100 percent. However, when averaged over all the duplicate samples, the precision RPD DQO was met for each pollutant category.

Side-by-side duplicate samples were also collected in the integrated duct organic and isocyanate sampling events. Precision for EPA Method 5 and the Draft Multiple Metals trains could not be assessed because setting up side-by-side duplicate sampling trains was not possible.

TABLE H-1. DATA QUALITY OBJECTIVES.

Measurement Parameter	Measurement Method	Precision (RPD)	Accuracy (% Recovery)	Completeness (%)
Volume Flow				
Exhaust and intake faces	ACGIH Anemometer	20	±40	90
Ventilation ducts	EPA Method 2	20	±10	90
Particulate				
Exhaust and intake faces and painter	NIOSH 500	35	NM[a,b]	90
Ventilation ducts	EPA Method 5	NM[c]	NM[c]	90
Metals				
Exhaust and intake faces and painter	NIOSH 7300	35	±30	90
Ventilation ducts	Draft EPA Multiple Metals	NM[d]	±30	90
Organics				
Integrated	NIOSH 1300	35	±30	90
Continuous	EPA Method 25A BAAQMD ST-7	20 20	±20 ±20	90 90
Isocyanates				
Exhaust and intake faces and painter	OSHA 42	35	±30	90
Ventilation ducts	NIOSH 5521	35	±30	90
Paints				
% Volatile	Grab sample, wt. loss on drying	20	±20	90
Usage rate	Observation, gravimetric analysis	NM[e]	NM[e]	90
Density	Grab sample, wt/vol analysis	20	±20	90

[a]NM = Not measured; not measurable.
[b]Method states that the bias is not significant.
[c]The primary error source is non-isokineticity. The isokineticity objective is 90 to 110 percent.
[d]Precision (as relative standard deviation) listed in the method ranges between 10 and 25 percent.
[e]Not definable. Estimated at ±50 percent.

TABLE H-2 DATA QUALITY RESULTS.

Measurement Parameter	Measurement Method	Precision (RPD)	Accuracy (% Recovery)	Completeness (%)
Volume Flow				
Exhaust and intake faces	ACGIH Anemometer	5	NM[a,b]	95
Exhaust duct	EPA Method 2	5	±2	95
Recirculation duct	EPA Method 2	NM[b]	NM[b]	NM[b]
Particulate				
Exhaust and intake faces and painter	NIOSH 500	32	NM[c]	90
Ventilation ducts	EPA Method 5	NM[d]	NM[d]	90
Metals				
Exhaust and intake faces and painter	NIOSH 7300	23	±15	90
Ventilation ducts	Draft EPA Multiple Metals	NM[e]	±20	90
Organics				
Integrated	NIOSH 1300	24	±30	86
Continuous	EPA Method 25A BAAQMD ST-7	10 10	±10 ±10	90 90
Isocyanates				
Exhaust and intake faces and painter	OSHA 42	10	NM[f]	95
Ventilation ducts	NIOSH 5521	10	±18	90
Paints				
% Volatile	Grab sample, wt. loss on drying	5	±13	100
Usage rate	Observation, gravimetric analysis	NM[g]	NM[g]	90
Density	Grab sample, wt/vol analysis	2	±9	100

[a]NM = Not measured; not measurable.
[b]Flow rate is not measurable due to cyclonic flow patterns in the duct.
[c]Method states that the bias is not significant.
[d]The primary error source is non-isokineticity. The isokineticity objective is 90 to 110 percent.
[e]Precision (as relative standard deviation) listed in the method ranges between 10 and 25 percent.
[f]Spike analysis not conducted.
[g]Not definable. Estimated at ±50 percent.

To assess precision of the paint percent volatile and density measurements, duplicate samples were collected and analyzed. The paint usage rate was determined gravimetrically. There is no practical method for assessing the precision or accuracy of this measurement.

2. Accuracy

Due to cyclonic flow patterns in the recirculation duct, the relative accuracy of the air flow rate measurements in the booth was not quantifiable. The accuracy of the measurement of the split-flow duct flow rate according to EPA Method 2 was established using calibrated standard pitot tubes.

To measure accuracy of the continuous organic concentration measurement, a mid-range standard reference gas that was not a zero or span gas was used. A solvent mass balance calculation provided an additional means of measuring accuracy, by comparing the quantity of solvent released into the booth to the quantity measured by the continuous monitors in the exhaust streams.

Accuracy of the metals sampling at the exhaust and intake faces was measured through the spike and recovery of filter samples according to NIOSH 7300. NIOSH 1300 sampling accuracy was measured through the spike and recovery analysis of unused sample tubes. The spike compounds and concentrations were selected based on the paint solvents measured in the charcoal tubes. Spike and recovery analyses of particulate samples were not possible. For the exhaust and intake faces and the painter, accuracy for particulate sampling was not measurable. For the ventilation ducts, particulate measurement was also not measurable because the primary error source is non-isokineticity. The isokineticity objective is 90 to 110 percent.

OSHA Method 42 was followed in the analysis of isocyanate compounds obtained at the exhaust face and in the vicinity of the painter. The method does not call for spike and recovery samples, and such were therefore not performed. Instead, isocyanates standards were tracked to watch for instrument drift, loss of column performance, and other errors. In addition, four standards for each analyte were run at both the beginning and end of each analytical run. For NIOSH 5521, the laboratory obtained percent recovery data by spiking samples with urea.

To assess the accuracy of the paint percent volatile and density measurements, published values from MSDSs for these parameters were obtained from manufacturers and compared to the analytical results. Usage rate accuracy was not measurable.

3. Completeness

The 90-percent completeness DQO was selected based on the successful completion of similar projects in the past involving paint spray booth emissions sampling and evaluation. A completeness level of 90 percent ensured that sufficient valid data of known quality were collected to evaluate project success. A completeness of 90 percent was achieved in all of the sampling events, with the exception of the integrated organic sampling, in which an 85-percent completeness was achieved, rather than the projected 90-percent, due to the malfunction of the pumps used in the NIOSH 1300 sampling procedures.

B. QUALITATIVE DATA QUALITY OBJECTIVES

The painting operations in the booth were highly variable and non-repetitious. Therefore, a primary concern was that the samples collected be representative of typical operations. For this reason, sampling occurred over a 3-week period.

Careful scheduling with the paint spray booth operator was required for the successful completion of this project. Acurex Environmental coordinated with the Travis AFB personnel to ensure that there was a sufficiently large workpiece backlog for each test series. Acurex Environmental also endeavored to ensure that a representative sample of each typical workpiece was evaluated.

C. REFERENCES

1. Hughes, S. E. and Ayer, J., Category III Quality Assurance Project Plan (QAPP), Acurex Environmental Corporation, Mountain View, California, prepared for U.S. Environmental Protection Agency, EPA Contract No. 68-D1-0146, Work Assignment 0/004, AEERL, Research Triangle Park, NC, March 1992.

2. EPA Quality Assurance Review of the Category III QAPP, EPA Contract No. 68-D1-0146, Work Assignment 0/004, April 1992.

3. Hughes, S. E. and Wolbach, C. D., Response to EPA Quality Assurance Review, May 6, 1992.

APPENDIX I

ECONOMIC CALCULATIONS

SUMMARY TABLE

Costs for Incineration Devices with 35% heat recovery (Thousands of dollars)

	Flowrate	Thermal Incineration		Catalytic Incineration	
Percent Recirc	dscfm	Capital Cost	Annual O&M Cost	Capital Cost	Annual O&M Cost
0	30000	$392	$383	$550	$297
50	15000	$387	$232	$471	$192
75	7500	$333	$147	$368	$127
90	3000	$275	$91	$270	$81

ASSUMPTIONS

Capital cost for recirc/split-flow modification: $60,000
VOC concentration in the exhaust increases linearly as the % recirc increases
Net heat of combustion of volatile compounds is approximately 3000 Btu/scf

Exhaust Stream Characteristics

% recirc	[VOC] (ppm)	heat content (Btu/scf)	heat content (Btu/lb)
0	10	0.03	0.41
50	20	0.06	0.81
75	40	0.12	1.62
90	100	0.3	4.06

All calculations based on "Control Technologies for Hazardous Air Pollutants", EPA/625/6-91/014, June 1991.
Calcs. in the manual are based on April 1988 dollars. Convert to August 1992 $ with the following CE Equipment Indices:

Apr. 1988 CE Equipment Index:	369.4
Aug. 1992 CE Equipment Index:	390.8

Assume 10 year equipment lifetime and 10% annual interest rate.

Operating hours	40	hrs/wk
	50	wks/yr
Methane fuel cost	$3.30	per 1000 cf
Electricity cost	$0.06	per kWh
O&M labor cost	$14.00	per hour
Flowrate	**15000**	dscfm
Heat Content	0.81	Btu/lb
Exhaust Temp.	77	F

SAMPLE THERMAL INCINERATION CALCULATION

Destruction Eff.	98 %	
Heat Recovery	35 %	[the spreadsheet calcs are set for 0, 35, 50, OR 70% heat recovery]
Air Heat Cap (Cp)	0.253 Btu/lb-F	
Temp. into Incin	610 F	
Combust. temp	1600 F	

Supplemental fuel (methane) requirements	369.7	scfm
Total flow	15369.7	scfm

Thermal Incinerator capital cost (Apr. 1988 $)	$162,627
Purchased Equipm APITAL COSTS	$191,900
Total Thermal Incin. Capital Cost (Apr. 1988$)	$308,960
Convert to Aug. 1992 dollars:	$326,858
Include the cost to modify duct	$60,000
TOTAL CAPITAL COST	$386,858

ANNUAL OPERATING COSTS

DIRECT		
Methane Fuel Cost	$146,414	
Pressure Drop	8	in. H2O
Electricity usage	44511	kWh/yr
Electricity costs	$2,626	
Oper. Labor Costs	$1,750	
Supervisory costs	$263	
Maintenance labor and mat'l costs	$3,500	
INDIRECT		
Overhead	$3,308	
Administrative	$7,737	
Property taxes	$3,869	
Insurance	$3,869	
Capital Recovery	$62,981	
TOTAL ANNUAL OPER. COSTS	$232,447	

SAMPLE CATALYTIC INCINERATION CALCULATION

Temp at catalyst inlet	997 F		
Temp at catalyst outlet	1000		
Temp after heat recovery	400		
Supplemental fuel (methane) requirements		221.9	scfm
Total flow		15221.9	scfm

Catalytic Incinerator capital cost (Apr. 1988 $)	$204,694
Purchased EquipmCAPITAL COSTS	$241,538
Total Incin. Capital Cost (Apr. 1988$)	$388,877
Convert to Aug. 1992 dollars:	$411,405
Include the cost to modify duct	$60,000
TOTAL CAPITAL COST	$471,405

Space Velocity	40,000 (1/hr)
Catalyst Bed Size	22.83 cu ft
Assume a 2-year catalyst life	
Precious metal cost	$3,000 per cu ft

ANNUAL OPERATING COSTS

DIRECT	
Methane Fuel Cost	$87,863
Pressure Drop	10 in. H2O
Electricity usage	55103 kWh/yr
Electricity costs	$3,251
Catalyst replacement cost	$39,469
Oper. Labor Costs	$1,750
Supervisory costs	$263
Maintenance labor and mat'l costs	$3,500
INDIRECT	
Overhead	$3,308
Administrative	$9,428
Property taxes	$4,714
Insurance	$4,714
Capital Recovery	$34,118
TOTAL ANNUAL OPER. COSTS	$192,377

APPENDIX J

EXAMPLE CALCULATION WORKSHEET FOR PERCENT RECIRCULATION VERSUS PERCENT PARTICULATE REMOVAL EFFICIENCY

PROJECTED POLLUTANT LEVELS WITH RECIRCULATION

This calculation assumes no split-flow.

% REMOVAL OF STRONTIUM CHROMATE	85
% REMOVAL OF ISOCYANATES:	85

RECIRCULATION RATE = 87.4%

This worksheet compares results to the TWA Em, not to the STEL

COMPOUNDS	DETECTED LEVEL W/O RECIRC. mg/m3	Current 8-hour TWA PEL or TLV mg/m3	PROJECTED LEVEL mg/m3	Booth Em Calculation (dimensionless)
ORGANICS VS. Em				
VOC1:				
MEK	5.80	590	46	0.08
VOC2:				
MIBK	4.20	205	33	0.16
VOC3:				
TOLUENE	0.64	188	5	0.03
VOC4:				
N-BUTYL ACETATE	1.10	710	9	0.01
VOC5:				
XYLENES	0.11	434	1	0.00
VOC6:				
ETHYL ACETATE	0.26	1400	2	0.00
VOC7:				
2-BUTANOL	0.28	305	2	0.01
			ORGANIC Em	0.29
METAL Em CALCULATIONS				Metal Em
STRONT CHROMATE as Cr	0.0063	0.05	0.050	1
ISOCYANATE Em CALCULATIONS				HDI Em
HDI	0.000570	0.034	0.005	0.13

(The reverse of this page is blank)