United States
Environmental Protection
Agency

Environmental Monitoring
Systems Laboratory
P.O. Box 15027
Las Vegas NV 89114-5027

EPA/600/8-87/023
June 1987

Research and Development

EPA

Environmental Methods Testing Site Users' Guide

ENVIRONMENTAL METHODS TESTING SITE

USERS' GUIDE

by

Charles K. Fitzsimmons
Environmental Research Center
University of Nevada-Las Vegas
Las Vegas, Nevada 89154

Cooperative Agreement No. CR812189-01

Project Officer

Shelly J. Williamson
Exposure Assessment Research Division
Environmental Monitoring Systems Laboratory
Las Vegas, Nevada 89114

ENVIRONMENTAL MONITORING SYSTEMS LABORATORY
OFFICE OF RESEARCH AND DEVELOPMENT
U.S. ENVIRONMENTAL PROTECTION AGENCY
LAS VEGAS, NEVADA 89114

NOTICE

The information in this document has been funded wholly or in part by the United States Environmental Protection Agency under cooperative agreement number CR812189-01 to the Environmental Research Center, University of Nevada-Las Vegas. It has been subjected to the Agency's peer and administrative review, and it has been approved for publication as an EPA document.

Mention of trade names or commercial products does not constitute endorsement or recommendation for use.

ABSTRACT

The Environmental Methods Testing Site (EMTS) Project is being conducted by the Environmental Protection Agency with the cooperation of the state of Georgia, the state of Tennessee, Hamilton County, Tennessee, and the city of Chattanooga. The concept is to establish one well-characterized site, designated as the Chattanooga Metropolitan Statistical Area, at which to conduct a series of studies designed to improve environmental monitoring methods and methods for assessing human exposure to toxic substances in the environment. The project, planned to span a 5- to 15-year period, is being conducted in support of the Toxic Substances Control Act of 1976.

The Chattanooga area is well suited as a site to conduct human exposure methodology studies. Site users have the support of local government and of EMTS Project participants who provide a management team, information gathering services, computerized data management and analysis, and quality assurance assistance. The Chattanooga area provides a hospitable climate, a population and geographical size allowing statistically valid sampling of subpopulations, isolation from other cities, a diverse industrial base, a large existing data base, and modern technical and logistical support facilities.

This document was submitted in fulfillment of Cooperative Agreement No. CR 812189-01 by the Environmental Research Center under the sponsorship of the U.S. Environmental Protection Agency. This document covers a period from April 1986 to March 1987, and work was completed as of April 7, 1987.

CONTENTS

Abstract iii
Figures vi
Tables vi

1. Introduction..... 1
   1.1 Purpose..... 1
   1.2 Objective..... 1
   1.3 Approach..... 1
   1.4 Description..... 2
2. Advantages to Users of the EMTS..... 10
   2.1 Political support..... 10
   2.2 Common data base..... 11
   2.3 Quality assurance..... 12
   2.4 Data management..... 13
   2.5 Statistical analysis..... 16
   2.6 Geographic information system..... 16
   2.7 Lower cost..... 17
3. Site Characteristics..... 19
   3.1 Site characterization..... 22
   3.2 Planned studies..... 24
4. Procedures and Requirements to Initiate a Study.. 25
   4.1 Study plan/QA program plan..... 25
   4.2 Technical review..... 27
   4.3 Authorization..... 28
5. Procedures and Requirements to Conduct a Study... 29
   5.1 Study management..... 29
   5.2 Field and systems audits..... 32
   5.3 Public relations..... 32
6. Procedures and Requirements to Document a Study.. 34
   6.1 Data validation..... 34
   6.2 Reporting requirements..... 34
   6.3 Peer review..... 36
   6.4 Publications..... 37
7. Procedures and Requirements to Incorporate Study Data Into the EMTS Data Base..... 38
   7.1 EMTS data base design..... 38
   7.2 Data entry..... 40
8. Summary..... 43

Appendices

A. Software available on the NCC system..... 45
B. Integrated Spatial Data Analysis System..... 50
C. Support facilities in the Chattanooga area..... 61
D. Documentation of inventory file questionnaire.... 73
E. Status of the EMTS data base..... 92

FIGURES

Number		Page
1	Map of Study Area	4
2	EMTS Management Structure	5
3A	Data Flow Scheme - Tabular Data	14
3B	Data Flow Scheme - Spatial Data	15
4	Study Management Structure	31
5	Data Structure for the EMTS GIS	41

TABLES

Number		Page
1	EMTS Participants	6
2	Steering Committee Membership	7
3	Environmental Advisory Committee	7
4	Business and Industry Advisory Committee	8
5	Participants Gathering Data	11
6	Data Types in EMTS Data Base	12
7	Summary of Site Characteristics for EMTS	20
8	Climatology of Chattanooga	21

1. INTRODUCTION

This document is written for managers and principal investigators who may be contemplating future field studies. It provides potential site users with the information necessary to conduct their studies at the EMTS.

1.1 PURPOSE

The purpose of the Environmental Methods Testing Site (EMTS) Project is to advance the state of the art of assessing human exposure to environmental pollutants. The Environmental Protection Agency (EPA) has a need to develop and improve methods for assessing human exposure to toxic substances to support regulations resulting from The Toxic Substances Act of 1976. Having the responsibility for administering the Act, the EPA Office of Toxic Substances (OTS) has asked the EPA Office of Research and Development (ORD) for technical assistance. The Office of Research and Development is responsible for developing and validating monitoring methods and for providing quality assurance support for the Environmental Protection Agency. The Environmental Methods Testing Site Project is being conducted by the Office of Research and Development as a means to provide the research needed by EPA on human exposure methods development.

1.2 OBJECTIVE

The objective of the Environmental Methods Testing Site Project is to provide a well-characterized site in which to develop, test, and compare multimedia exposure monitoring methodology. The emphasis is on characterizing one site in detail so that any number of exposure assessment studies can be conducted more economically and quickly than they could be conducted at separate sites.

1.3 APPROACH

The approach to accomplishing the purpose and objective of the EMTS Project is to set up a single well-characterized site, then invite principal investigators to conduct relevant field studies. Categories of needed studies include but are not limited to the following:

- Testing the efficiency and bias of questionnaires used to canvass human populations for environmental exposure information

- Testing field performance of environmental and human measurement methods

- Evaluation of techniques for multimedia data analysis

- Validation of models

- Evaluation of relevant quality assurance procedures

In order to fulfill its purpose and objective, the EMTS Project needs principal investigators to use the site. The nature of the EMTS Project is to provide a site and a network of political and technical support. It is expected that EPA will conduct most of the studies done at the EMTS, but all other Federal agencies, universities, state and local governments, and public, private, and international organizations are encouraged to participate in the opportunities offered by the EMTS. A principal investigator will qualify as an EMTS user when his study proposal is approved by the EMTS Steering Committee.

1.4 DESCRIPTION

The EMTS Project is being conducted by the EPA Office of Research and Development for the EPA office of Toxic Substances. Project activities are carried out by the ORD Environmental Monitoring Systems Laboratories and their respective contractors in Research Triangle Park, North Carolina, and Las Vegas, Nevada.

After careful consideeration of a set of site selection criteria, the EMTS was chosen to be the six-county Chattanooga, TN-GA, Metropolitan Statistical Area. Priority of consideration was first given to local political support, then climate, population, geography, isolation, diversity of industry, availability of data, and finally, local support facilities. Figure 1 is a map showing the location and extent of the study area.

The state of Tennessee, Hamilton County, and the city of Chattanooga are active participants in the project. The state of Georgia has chosen to be represented by the EPA Region 4 office in Atlanta and has given its tacit approval and support of the project.

Table 1 summarizes the participants and their functions in the EMTS Project. Management of the project is carried out through the EMTS Steering Committee, the membership of which is shown in Table 2.

Local interest in the EMTS Project is high. When the EMTS Steering Committee was formed, two advisory subcommittees were incorporated to insure the rapid flow of information between Project planners and local interest groups. This arrangement has worked well. The names and affiliations of members of the advisory committees are listed in Table 3 and Table 4. Advisory committee members and their constituents have a chance to review planning documents and voice their concerns or suggestions before a problem evolves. The advisory committees are shown all news releases concerning the EMTS Project and its related studies before they are given to the press.

ENVIRONMENTAL METHODS TESTING SITE
CHATTANOOGA SMSA

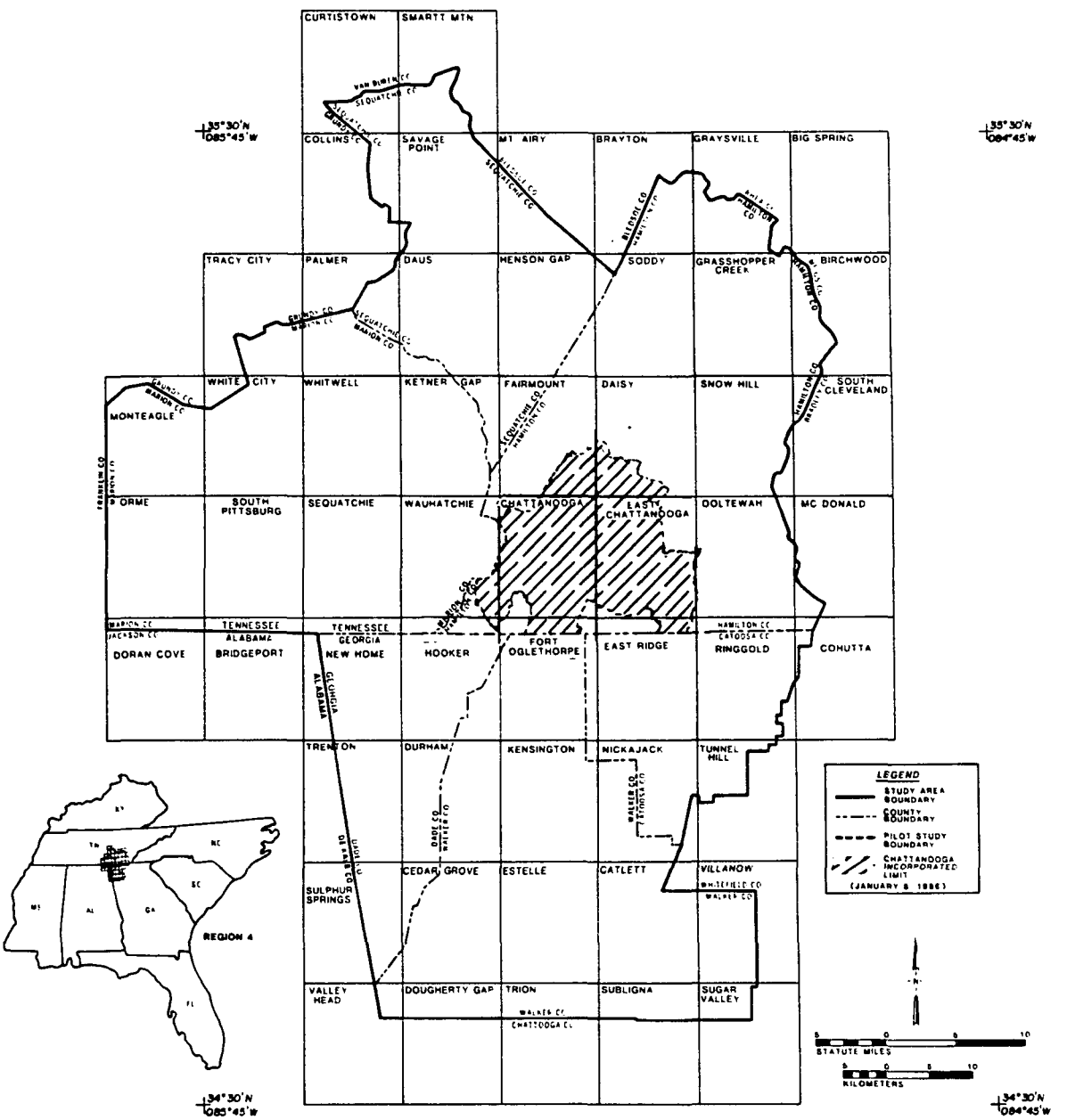

Figure 1. Map of study area.

EMTS Project Management

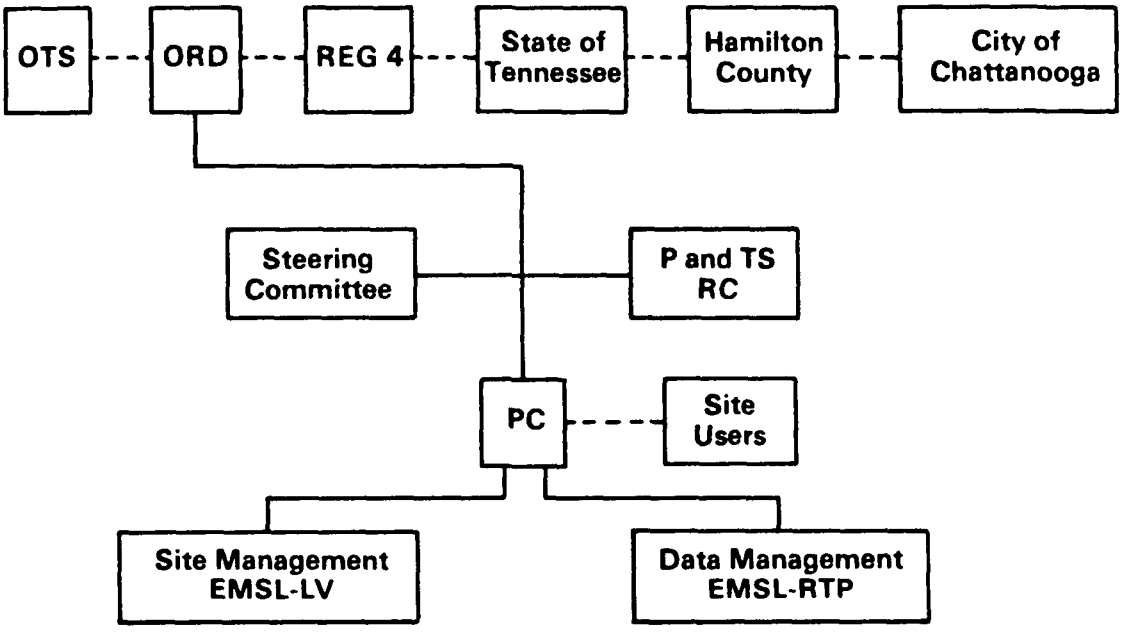

LEGEND:

OTS — Office of Toxic Substances
ORD — Office of Research and Development
P and TS RC — Pesticides and Toxic Substances Research Committee
PC — Project Coordinator
EMSL-LV — Environmental Monitoring Systems Lab at Las Vegas
EMSL-RTP — Environmental Monitoring Systems Lab at Research Triangle Park

Figure 2. EMTS management structure.

TABLE 1. EMTS PARTICIPANTS

Participant	Function
EPA Office of Research and Development	Management, funding
EPA Office of Toxic Substances	Client, management, funding, data source
EPA Region 4	Liaison, management, data source
State of Georgia	Site host, data source
State of Tennessee	Site host, management, data source
Hamilton County	Site host, management, data source
City of Chattanooga	Site host, management, data source
EPA Environmental Monitoring Systems Laboratory - Las Vegas	Management, site characterization
EPA Environmental Monitoring Systems Laboratory - Research Triangle Park	Management, data management
Environmental Research Center, University of Nevada-Las Vegas (contractor)	Project management, quality assurance, cartography, data gathering
Lockheed Engineering and Management Services Company (contractor)	Data analysis, data base design and development
Northrop Services, Inc. (contractor)	Data management, project tracking, data gathering
Tennessee Valley Authority (interagency agreement)	Data source

TABLE 2. STEERING COMMITTEE MEMBERSHIP

Chairman and Project Coordinator	Robert Jungers
Alternate	Gerald Akland
State of Tennessee representative	Michael Bruner
Alternate	Harold Hodges
Hamilton County representative	Howard Roddy
Alternate	Steve Meyer
City of Chattanooga representative	J. Wayne Cropp
Alternate	Gaines Hobbs
EPA Region 4 representative	James Finger
Alternate	Winston Smith

TABLE 3. ENVIRONMENTAL ADVISORY COMMITTEE (JUNE 1986)

Barbara Kelly	Chattanooga Clean Air Coalition
Janet Phillips (Chair)	Chattanooga Audubon Society, Inc.
Robert Pyle	Sierra Club
Geri Spring	Guardians of North Chickamauga Creek
Jean Stansell	American Lung Association
Caroline Williams	League of Women Voters

TABLE 4. BUSINESS AND INDUSTRY ADVISORY COMMITTEE (JUNE 1986)

Oliver Benton (Chair)	Director, Center for Productivity, Innovation and Technology, Chattanooga State Technical Community College
Ronald Cox	Dean, School of Engineering University of Tennessee at Chattanooga
John Eager	Director, Engineering Services, Standard Coosa Thatcher
Larry Wingo	Environmental Engineer Combustion Engineering, Inc.
John Wittman	Vice President, Wheland Division, North American Royalti

All funding for management of the EMTS comes through the Office of Research and Development but is allocated through the Pesticides and Toxic Substances Research Committee in support of OTS program objectives. An overview of the EMTS management structure is shown in Figure 2.

Two EPA Environmental Monitoring Systems Laboratories and their contractors carry out the technical tasks of the project. In particular, the major task for Research Triangle Park is data management, and that for Las Vegas is site characterization. Characterization requires that all known data relevant to the site be found and evaluated. The product of these efforts is the EMTS data base which requires considerable data management to prepare it in a form useful for evaluation. These data can be analyzed either by a geographic information system in Las Vegas or by statistical packages in Research Triangle Park.

The next section of this users' guide discusses the advantages to principal investigators of conducting studies at the EMTS and includes a description of the data available from the EMTS data base. Following that is a description of the site and the support facilities available at the site. The users' guide continues with the procedures and requirements to initiate, conduct, and document a study at the EMTS. Finally,

procedures are given for those users who wish to contribute their data to the EMTS data base.

2. ADVANTAGES TO USERS OF THE EMTS

Users of the EMTS can expect to benefit in the following areas:

- Political support
- Common data base
- Quality assurance program
- Data management
- Statistical data analysis
- Geographic information system
- Lower cost

This section describes these aspects of the EMTS Project which constitute a favorable environment for conducting field studies.

2.1 POLITICAL SUPPORT

Often the greatest obstacle to conducting a field study is obtaining permission and cooperation from the local authorities. Even when such support is secured, the process often takes a considerable amount of time. Delays in starting dates can be fatal to studies because of time limits in available funding. The EMTS Project benefits from the support of the City of Chattanooga, Hamilton County, and the states of Tennessee and Georgia. The focus of local activity for the EMTS Project is the Chattanooga-Hamilton County Air Pollution Control Bureau. Public relations for the Project are handled by this agency, and most meetings of the Steering Committee are held in their office. Two local advisory committees to the Steering Committee have been set up to provide a conduit for two-way communication between EMTS participants and local businesses and environmental groups. For the most part these groups view the EMTS as being potentially beneficial to the Chattanooga area, but naturally they are concerned about any adverse publicity which could arise from a poorly handled field program.

So long as EMTS users work closely with the Steering Committee, continuing support of the community is anticipated.

For EPA program Project Officers and other principal investigators, use of the EMTS for planned field projects should save considerable time and resources. EPA, for economic reasons, is advocating the use of the EMTS for its own planned projects in the field of human exposure methods development. A brief description of studies planned for the EMTS is given in Section III.

2.2 COMMON DATA BASE

Comparing results to data obtained from previous studies is often a major part of the data analysis following a field study. Finding these previously collected data is not always easy, as often they are either unpublished, or it is too expensive to gather them into a useable form. A benefit of doing studies at the EMTS is having access to a comprehensive data base which has been assembled for the purpose of characterizing the site. The primary task of the EMTS Project has been to assemble the EMTS Data Base. Table 5 lists the EMTS participants who are actively gathering data for the EMTS data base.

TABLE 5. PARTICIPANTS GATHERING DATA

1	Chattanooga-Hamilton County Air Pollution Control Bureau
2	Environmental Monitoring Systems Laboratory-Las Vegas
3	Environmental Monitoring Systems Laboratory-Research Triangle Park
4	Environmental Research Center (Las Vegas)
6	EPA Region 4 (Atlanta and Athens)
7	Lockheed Engineering and Management Services Co. (Las Vegas)
8	Northrop Services, Inc. (Research Triangle Park)
9	Tennessee Department of Health and Environment (Nashville)
10	Tennessee Valley Authority (Chattanooga)

It can be assumed that certain types of data will be needed for most studies. Table 6 lists the major types of data that have been considered for the EMTS data base. The data types have been divided into two major categories: geographic data and environmental quality data.

TABLE 6. DATA TYPES IN EMTS DATA BASE

I. Geographic data	II. Environmental quality data
1. Natural resources	1. Air
2. Hydrography	2. Water
3. Meteorology	3. Soil
4. Political and administrative units	4. Food
5. Demography	
6. Infrastructure and cultural features	
7. Health related data	
8. Agricultural and commercial data	
9. Special biological resources	
10. Special physical features	

A more detailed discussion of the data that have been inventoried for the EMTS Project is presented in Section III, Site Characteristics.

2.3 QUALITY ASSURANCE

The EMTS Quality Assurance Program is composed of two parts. One is for retrospective data which is the existing data that have been reviewed for their relevance to the EMTS Project and that have become part of the EMTS Data Base. The other part of the Quality Assurance Program is for prospective data which is data proposed to be generated by studies to be conducted at the EMTS and which is approved to be added to the EMTS Data Base. Both these parts are described thoroughly in the EMTS Quality Assurance Program Plan but are outlined briefly here.

The Environmental Monitoring Systems Laboratory at Las Vegas (EMSL-LV) is responsible for the EMTS QA program. The Laboratory may designate a contractor to be the Quality Assurance Agent for the EMTS Project. The QA objective for the EMTS Project is to create an EMTS Data Base with known quality for retrospective data and with specified quality for prospective data that can be used to test and develop methods for assessing human exposure to environmental pollutants. In the case of retrospective data, the QA Agent reviews the available reports, quality assurance plans, and other ancillary information to determine the quality of existing data. In the case of prospective data, the principal investigator is responsible for conducting an effective quality control program as an integral part of his study. The EMTS Project will not provide funding for quality control procedures; however, the

EMTS Quality Assurance Agent will provide guidance to principal investigators regarding reasonable data quality objectives which should be met. The EMTS Quality Assurance Agent will be responsible for providing EPA management with information concerning the quality of data generated by studies at the EMTS.

Because there are so many possible kinds of measurements which could be made in a project as comprehensive as the EMTS, no overall data objectives can be set. However, with attentionto the purpose of the measurements, principal investigators are encouraged to attain the best quality which can be afforded and to use state-of-the-art analytical techniques whenever possible. Each study proposal will be reviewed on a case-by-case basis so that data objectives for each study can be agreed to before the study begins.

As part of the services offered to users of the EMTS, EMSL-LV may conduct field audits and systems audits during the field operations of a study. EMSL-LV will also act as a quality assurance consultant to help principal investigators plan studies to be conducted at the EMTS.

2.4 DATA MANAGEMENT

The Environmental Monitoring Systems Laboratory-Research Triangle Park (EMSL-RTP) has the responsibility for data management for the EMTS Project. Data Management for the EMTS Project is primarily concerned with procedures to inventory, review, gather, and transmit retrospective data from disparate sources into a common data base. Another important data management task is to provide EMTS users access to the EMTS data base. It is expected that many users will want to examine data sets or selected records or even selected parts of records from data sets in the EMTS data base to perform prestudy analyses. The Project Coordinator can put users in direct communication with the RTP staff so that customized data extractions can be arranged.

Details of the data management procedures set up for the EMTS Project are documented in the EMTS Data Management Procedures Plan. An overview of the data flow for the project is shown in Figure 3.

Although the EMTS data management procedures are aimed at existing data, they can work equally well for new data. In actuality, retrospective and prospective data form a continuum. Once a proposed study is accomplished, what was once prospective data becomes retrospective, something which can be evaluated, validated, and added to the data base.

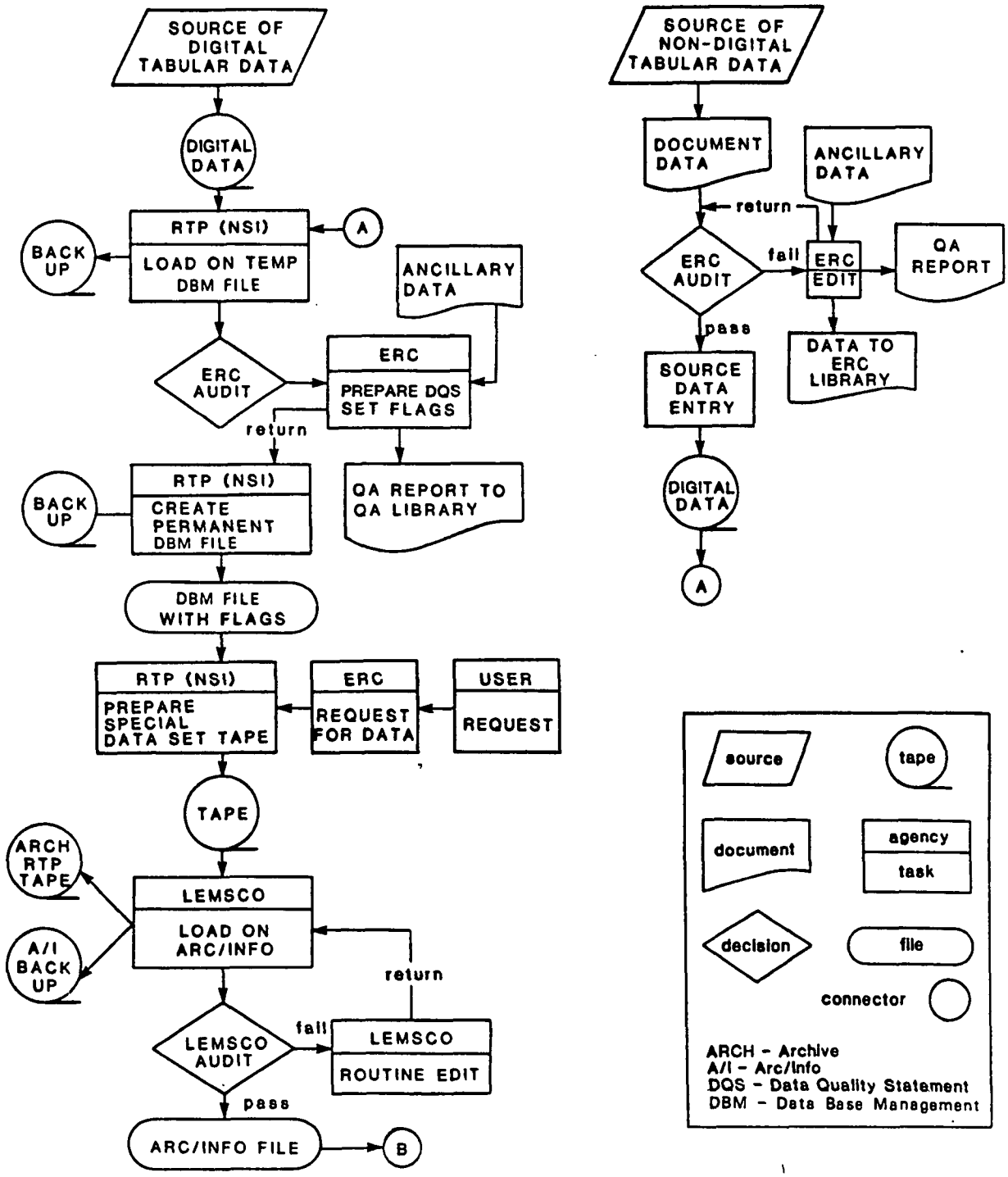

Figure 3A. Data Flow Scheme - Tabular Data.

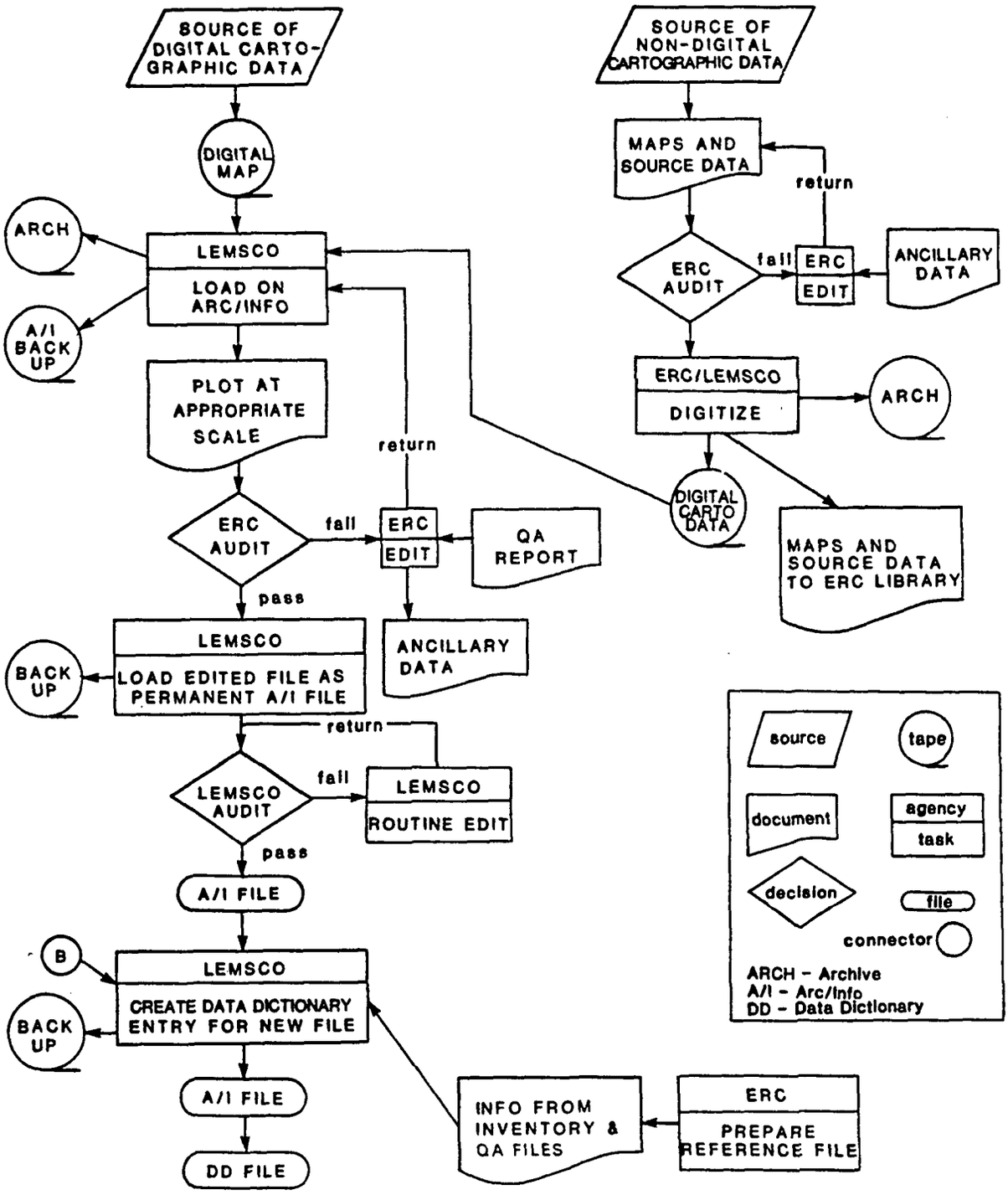

Figure 3B. Data Flow Scheme - Spatial Data.

The main purpose of the EMTS Project is to attract studies which will increase the state of knowledge about human exposure. It is expected that principal investigators taking advantage of the benefits provided under the EMTS Project will contribute their data to the growing EMTS Data Base. This practice will continue to benefit other investigators who wish to do studies at the EMTS. To insure that these data are compatible with the data base, EMSL-RTP will assist investigators to enter their data into the EMTS Data Base. The procedures for entering data into the EMTS Data Base are discussed further in Section VII.

2.5 STATISTICAL ANALYSIS

Users of the EMTS may want to make use of the EPA National Computer Center (NCC) at RTP to perform statistical analyses or other operations in order to evaluate extractions from the EMTS data base or to evaluate their newly collected data. The EMTS Project will provide a limited amount of computer support for this purpose. There may be certain advantages to the user's having direct access to the EMTS data base on the NCC IBM 3090-200. One is that the user is assured of having access to the most recent version of the data, and another is the immediate availability of the powerful statistical analysis software packages on the IBM. A more detailed description of the statistical software packages available on the NCC IBM is given in Appendix A.

2.6 GEOGRAPHIC INFORMATION SYSTEM

Perhaps the most unique benefit of the EMTS Project to the user is the opportunity to analyze data with a geographic information system. The GIS can be used to analyze existing data before a study is begun. For example, spatial analysis can be used to determine the best part of the site in which to conduct a study. The suitability of an area for a study will depend on what data already exist for that area; i.e., population characteristics, locations of pollution sources, sources and distribution of drinking water, etc.

The availability of data sets can be determined by querying the EMTS Inventory File, which is described further in Section 3 under the subheading, 3.1 Site Characterization. The user would work with EMSL-LV to design a prestudy GIS analysis. Maps and information not already coded into the GIS, but derivable from the information in the EMTS Data Base, would be prepared as new required coverages. The spatial analysis would then proceed.

ARC/INFO is the GIS software package being used by the EMTS Project. It is a product of Environmental Systems Research Institute (ESRI), Redlands, California. The system is installed on a DEC VAX 11/785 computer leased by LEMSCO in Las Vegas. A library of digital maps (coverages) such as Political and Administrative Boundaries, Land Use/Land Cover, Infrastructure and Cultural Features, Elevation, and Hydrography is maintained on the GIS in Las Vegas. Most of the environmental data, which are tabular in nature, are maintained on the NCC IBM system in RTP. Tabular data, also known as statistical data, are numbers and codes which can be represented in tables comprising rows and columns. Tabular data usually represent the quantities, magnitudes, or names of items. An example of tabular data is a file of ozone concentrations at given times and places. Whenever environmental data are needed for a GIS analysis, they are retrieved from the IBM at RTP and are sent to Las Vegas where they are incorporated as attributes for a particular coverage.

A more detailed discussion of the nature and capabilities of the ARC/INFO software is given in Appendix B.

ARC/INFO also can be used to analyze new study data. Again, working with EMSL-LV and EMSL-RPT, an EMTS user would prepare his data as a new data layer in the GIS. A combination of statistical and spatial analyses using both the NCC IBM and the Las Vegas GIS systems will give users powerful tools for gleaning the most from their study efforts. Operational procedures for preparing data for GIS analysis are discussed in Section VII.

2.7 LOWER COST

Partaking of the advantages offered by the EMTS Project should result in lower costs. Although principal investigators must have their own funding to conduct studies at the EMTS, the costs of some of the support mentioned in this section will be borne by the EMTS Project. The political support and public relations fostered by the existence of the Steering Committee will be provided at no cost to site users.

Access to the EMTS data base will be given to principal investigators with approved studies. This access will include a copy of the most recent Inventory File and magnetic tape copies of selected data sets from the EMTS data base if requested. Data sets that are part of the EMTS data base by virtue of a license agreement with private vendors cannot be copied, but they can be viewed and analyzed by users in Las Vegas or from their own terminals in the case that the data are stored on the IBM 3090-200 in RTP.

The EMTS Project will provide a reasonable amount of staff time so that the principal investigator can consult with EMSL-LV, EMSL-RTP, and their contractors for the purpose of planning QA programs, GIS analyses, and data management procedures. In addition, depending on the scope of work required, the EMTS Project will pay for the initial retrieval of data from the EMTS data base, the processing of these data into customized files, and the creation of customized GIS coverages for the purpose of conducting prestudy GIS analyses. The EMTS Project will also perform a limited amount of prestudy spatial analysis by using the ARC/INFO software on the VAX 11/785 in Las Vegas. Principal investigators can work in Las Vegas as a visiting scientist to accomplish these prestudy activities.

time. Persons wishing to use ARC/INFO must spend considerable time learning the system, and they are encouraged to attend training courses offered by ESRI in Redlands, California, to appreciate more fully the power of the system. Using the visiting scientist approach, EMSL-LV will enter data, operate the GIS, and work with the principal investigator to provide the products he needs.

Remote terminal access to the GIS computer may be available in the future. Such access will depend on the demand for direct acess, the willingness of users to learn to use the system, and the availability of funding for the necessary equipment.

All services provided by the EMTS Project will be rendered according to the needs of the researcher and of the Environmental Protection Agency. The order of priority will be set by the Steering Committee. It is expected that EMTS funding will be sufficient to provide services at the level described above for up to five studies per year. When EMTS resources become strained, principal investigators will be asked to pay for further services by a transfer of funds to the appropriate EPA laboratory.

Finally, the EMTS Project will pay to have study data entered into the EMTS data base where they will reside on the IBM 3090-200 at RTP.

The EMTS Project will not pay for poststudy GIS analyses. Principal investigators wishing to have such analyses performed must make the appropriate funding arrangements before the field work begins so that the necessary resources can be made available.

3. SITE CHARACTERISTICS

Efforts to develop criteria to select a suitable site for the EMTS Project were first begun in early 1984. The site was to be a Metropolitan Statistical Area (MSA) as defined by the Bureau of the Census. By the end of 1984 a list of candidate MSA's had been selected. The categories of the criteria used to select the Chattanooga, TN-GA, MSA are listed in the order of priority as follows:

1. PERMISSION by the local authorities.

2. CLIMATE which would allow year-round field operations.

3. SIZE large enough that subpopulations would be statistically valid for studies, but not so large as to make characterization of the site too difficult.

4. ISOLATION from other pollution sources and other populations.

5. EXISTENCE OF POLLUTION SOURCES as diverse as possible in measurable quantities in a multimedia environment.

6. AVAILABILITY OF DATA to characterize the site.

7. SUPPORT FACILITIES for field studies.

A more complete treatment of the subject of site selection is presented in the Environmental Methods Testing Site Project-Site Characteristics Document, Environmental Monitoring Systems Laboratory, Las Vegas, Nevada, July 9, 1985. Site selection was based entirely on data readily available from EPA, the Bureau of the Census, the National Climatic Center, and the Chattanooga telephone directory. No measurements or special surveys were conducted during the selection process. Table 7 summarizes some of the characteristics used to select the Chattanooga MSA as the EMTS. Table 8 summarizes the climatology of the Chattanooga area.

TABLE 7. SUMMARY OF SITE CHARACTERISTICS FOR EMTS

Characteristic	Criteria	Chattanooga
Population - MSA	450,000 to 1,100,000	426,540[e]
Population - Urban Area		301,515[e]
Population - City		169,565[e]
Population Ratio (urban; rural)	90 : 10	74.6 : 25.4[e]
Rate of change - MSA (%/10 yr.)	< 10%	15.0[e]
Rate of change - City (%/10 yr.)		41.4[e]
Age Ratios (<18 : 18-65 : >65)	- : - : <20%	17:5 : 71.6 : 10.9[e]
Racial Region (white: non-white)	65-95% : 5-35%	85.4 : 14.6[e]
Area - MSA (m^2)		2102[e]
Area - Urban (m^2)	160 to 480	248[e]
Area - City (m^2)		124[e]
Area Ratio - Urban/MSA (%)	20%	11.8[e]
Area Ratio - Farmland/MSA (%)		24[e]
Terrain	flat	basin; complex
Total VOC Emissions (tons/day)	measurable in environment	64.7[f]
Volume of Industry (no. of employees)[a]	high	40,457
Volume of Industry (no. of establishments)[a]	high	340
Industrial Diversity - Richness Index[a]	Diverse; max = 16	12.2
Surface water - used for municipal drinking	Yes; large flowing system	Tennessee River
Groundwater - used for municipal drinking	Yes; not mixed with surface water	No (some private wells)
Waste Sites in MSA (ERRIS)[b]	Yes	34
Waste Sites in Central County (ERRIS)	Yes	27
Waste Sites in MSA (NPL)		1
Waste Sites in MSA (RCRA)	Yes	
No. of Academic Institutions[c]		6
No. of Hospitals	Support facilities sufficient	18
No. of Medical Laboratories	in number and quality to	7
No. of Testing Laboratories	provide professional services	9
No. of Consulting Engineering Firms[d]	and labor during characteri-	22
No. of Environmental Engineering or Consultant Firms	zation and methods testing phases of the project.	4

[a] Based on 1981 Bureau of Census County Business Pattern data for 16 selected industries.

[b] Includes only sites designated as "planned action" in Emergency and Remedial Response Information System.

[c] Includes universities, colleges, and junior colleges, but not seminaries.

[d] Includes all types of engineering capabilities.

[e] Based on 1980 Census data.

[f] Based on 1977 VOC emissions inventory.

blank for Table 7

TABLE 8. CLIMATOLOGY OF CHATTANOOGA[a]

January average maximum temperature	49.6°F	(9.8°C)
minimum temperature	32.2°F	(0.1°C)
July average maximum temperature	88.6°F	(32.4°C)
minimum temperature	68.8°F	(20.4°C)
Average number of frost-free days	228	
Average date of first freeze in fall	November 8	
Average date of last freeze in spring	March 26	
Average annual precipitation	52.6 in.	(20.7 cm)

[a] National Climatic Data Center, 1984

The Chattanooga MSA was chosen as the EMTS because it ranked high by the selection criteria. Of major importance is the political support being given by the City, County, and State. It is no small concession to be granted permission to conduct studies in a city for the 5- to 15-year period proposed by EPA.

The population of the 248 square mile urbanized area in 1980 was 301,515. The entire MSA had a 1980 population of 426,540 and includes 2,102 square miles and 6 counties: Hamilton, Marion, and Sequatchie in Tennessee, and Catoosa, Dade, and Walker in Georgia. A more recent estimate of the MSA population made by the Chattanooga Area Regional Council of Governments in 1985 is 425,600. Chattanooga lies in the Tennessee River Valley, surrounded by rather complex terrain. The city is reasonably isolated from other populated areas and sources of pollution beyond the MSA.

The Chattanooga MSA is home to a wide variety of industrial enterprises. It was this diversity of potential multimedia pollution sources that helped select it as the EMTS. Other candidate sites had less diversity even though some had greater concentrations of one or a few related industries. For a site meant to test a wide variety of exposure methods, diversity was considered to be more important than quantity.

The State of Tennessee is one of the most progressive in the area of environmental programs. The Tennessee Department of Health and Environment operates its own air, water, and hazardous waste programs, and in the case of air, the Chattanooga-Hamilton County Air Pollution Control Bureau is the designated agency for Chattanooga and Hamilton County. These programs, having been in place for many years, have amassed a

large amount of accessible data which can be used in the EMTS data base.

Finally, the Chattanooga area has a very good selection of support facilities which would be useful for any planned field study. Appendix C lists the name, address, and phone number of selected facilities in the following categories:

- Colleges, Universities, and Technical Schools
- Laboratories

  Environmental Testing
  Construction Testing
  Medical Testing

- Consulting Engineers, private companies

  Environmental Engineering
  Architectural/Civil Engineering
  Chemical/Industrial Engineering
  Mechanical Engineering

- Consulting Engineers and Scientists, independent

  Natural Sciences
    Biology
    Chemistry
  Physical Sciences
  Engineering
    Environmental
    Civil
    Mechanical

- Consulting Engineers and Scientists, University of Tennessee-Chattanooga

  Geosciences
  Computer Science
  Engineering
    Chemical
    Civil
    Electrical
    Industrial/Engineering Management
    Mechanical

3.1 SITE CHARACTERIZATION

This section of the EMTS Users' Guide summarizes the site characterization efforts which have occurred since July 1985. An automated Inventory Questionnaire was distributed to the

participants listed in Table 3 on April 1, 1986. The documentation for the Inventory Questionnaire is given in Appendix D to show the data structure of the EMTS Inventory File. As of the date of this Users' Guide, 243 records, each corresponding to a data set, have been entered into the Inventory File. As can be seen from the summary given in Appendix E, there is a broad range of data types. Some data are digital and ready to be used in computerized analyses. Others were gathered by going through file cabinets and have not been digitized. Data sets are in various stages of review for data quality by the Environmental Monitoring Systems Laboratory-Las Vegas.

Site characterization is an on-going process and will no doubt continue throughout the duration of the EMTS Project. However, the bulk of the available data characterizing the Chattanooga MSA is in hand or at least has been located so that data can be retrieved when needed. (See Appendix E.) The type and quantity of data which will be processed into either the NCC IBM system or the geographic information system will depend on requests from EMTS users.

Data destined to be analyzed in the ARC/INFO geographic information system progress through three levels of development: the working data base, the data library, and the GIS data base. The working data base comprises all of the data sets listed in the Inventory File regardless of data quality or suitability for use in subsequent EMTS analyses. Data that are reviewed and whose quality has been determined constitute the second level of development called the data library. Only data that reach this level can be used to prepare coverages for use in the GIS. All data sets in the EMTS data library also will have been digitized. Finally, data sets which have been processed to become coverages (maps) constitute the GIS data base. Data sets in this third level are immediately available for analysis by ARC/INFO.

Users who wish to analyze the existing data will want to review the contents of the three levels of the EMTS data base to determine the amount of data preparation and quality assurance auditing which may be required. Data sets of the working data base and those sets designated as members of the data library can be indexed through the dBASEIII Inventory File, maintained by the Environmental Monitoring Systems Laboratory in Las Vegas. The complement of the GIS data base can be indexed through the ARC/INFO data dictionary, also maintained by the Environmental Monitoring Systems Laboratory in Las Vegas. In addition, the Environmental Monitoring Systems Laboratory-RTP maintains a Master Index of the tabular data that they retain for the data library on the IBM 3090-200.

3.2 PLANNED STUDIES

The Environmental Protection Agency has chosen the EMTS (Chattanooga MSA) to be the Human Exposure Assessment Location (HEAL) of the United States. The HEAL Program is an international project being coordinated in several countries by the World Health Organization. The agency responsible for setting up the U.S. HEAL is the EPA. In keeping with the purpose of the EMTS Project to provide a well-characterized site for many studies at reduced cost, and because the siting criteria for EMTS were compatible to those of the HEAL, EPA is already developing protocols for a HEAL pilot study in Chattanooga. Local support of the HEAL program can be characterized as enthusiastic. Because HEAL will entail human exposure monitoring of blood and milk, and environmental monitoring of indoor air, household drinking water, and duplicate meals, a high degree of local cooperation is needed. The public relations network already established through the EMTS Project makes these kinds of studies much easier.

The EPA Office of Toxic Substances is planning to add Chattanooga to its National Human Monitoring Program. Objectives of this program are to (1) provide data for risk assessment, (2) to identify chemicals for testing, and (3) to identify populations who may be at greater risk. The program monitors concentrations of volatile and semivolatile organics in blood and adipose tissue. The addition of Chattanooga to these national monitoring networks will help establish the relationship of some of the characteristics of the EMTS to the rest of the nation, and this is something which may be of importance to other users.

The EPA Office of Air Quality Planning and Standards is proposing to establish at least one research site at Chattanooga for the Toxic Air Monitoring System (TAMS) program. The site would be equipped with the same air quality monitoring systems being used in the TAMS network; these systems are made up primarily of a distributed flow air sampler using a Tenax solid sorbant collection medium and gas chromatographic analysis for volatile organics.

4. PROCEDURES AND REQUIREMENTS TO INITIATE A STUDY

To gain access to the Environmental Methods Testing Site and its various supporting programs, prospective users must contact the EMTS Project Coordinator. The EMTS Project Coordinator is:

Robert H. Jungers, Senior Science Advisor
Monitoring and Assessment Division (MD-56)
Environmental Monitoring Systems Laboratory
Research Triangle Park, NC 27711

Telephone: FTS 629-7870, Commercial (919) 541-7870

The Project Coordinator will answer all questions concerning the EMTS Project and will provide prospective users with the names of the appropriate persons to call in order to proceed with each phase of a study. This section outlines the procedures and requirements to initiate a study. In general there are three steps: preparation of a study plan, technical review of the study plan, and approval of the study plan.

4.1 STUDY PLAN/QA PROGRAM PLAN

A prospective EMTS user must prepare a comprehensive study plan and a quality assurance program plan for the proposed study and must submit them to the EMTS Project Coordinator. The purpose of the combined plan is to convey to the EMTS Steering Committee what is intended to be accomplished, how it will be done, how it will be funded, and what impact it may have of the residents of the study area.

Funding for the EMTS Project provides only the support to studies discussed in Section II. EMTS Project funding cannot be extended to cover the expenses of sampling, sample analysis, supplies, logistics, travel, and labor of study personnel. These expenses must be borne by separate funding arranged by the principal investigator of the proposed study.

The EMTS Steering Committee, which is responsible for approving studies to be conducted at EMTS, must be convinced that the study is relevant to the overall objectives of the EMTS Project and that the quality of the resulting data or information will be comparable to other measurements in the data base characterizing the EMTS. To insure that the Steering Committee sees that all the requirements are addressed in the study plan, the following format should be used:

4.1.1. Background

Summarize briefly what has been done previously in the proposed area of research. State how the EMTS environment and the GIS could help the study.

4.1.2. Rationale

State the reason why the study is proposed. Cite the specific underlying Public Law, regulation, or other need that the study will support.

4.1.3. Objective

Clearly state the objective or objectives of the study. In particular the required data quality objectives; i.e., the limits of acceptable error, must be clearly specified.

4.1.4. Methods and Procedures

Identify the number, type, location, and frequency of samples or measurements. Indicate the methods and procedures to be used for sampling, sample preparation, and sample analysis, either by references or in detail if no adequate references are available. Describe the experimental design, statistical procedures to be used, and methods for data analysis.

4.1.5. Quality Assurance

Present a detailed QA/QC program plan to show clearly how all aspects of the study, from sampling through analysis to data interpretation, will be kept within prescribed limits of error.

4.1.6. Results

Describe in detail the format and data storage medium whereby results will be presented. The format should include as a minimum: type of sample, geographic location and time of sampling, and analytical results in appropriate units. Describe how QA/QC results will be presented.

4.1.7. Evaluation and Interpretation of Data

Explain in detail how the data will be evaluated and used.

4.1.8. Management and Funding

Identify the principal investigator and other personnel involved in the study and give their credentials. Describe the details of the budget and give the funding source.

4.1.9. Schedule with Identified Products

Present a schedule showing as a minimum when the study will begin and end, when validated data will be made available to the EMTS, and when the final report will be available.

4.1.10 Resource Requirements

Identify any additional resources not already mentioned under Management and Funding which might be required, especially those which might be contributed by other EMTS participants, which might be provided by local businesses or institutions, or which can affect the local community.

4.1.11. Communication Strategy

Identify one spokesperson for the study group. Describe any planned public information program which is intended to explain the study and its purposes to the local citizenry.

4.2 TECHNICAL REVIEW

The completed study plan should be submitted to the EMTS Project Coordinator who will present it to the EMTS Steering Committee for review. A technical review will be accomplished by a Technical Review Subcommittee appointed by the EMTS Steering Committee. Some members of the Technical Review Subcommittee may be different for each study proposal; subcommittee membership is determined by the subject matter and by the expertise required. Typically three reviewers will be appointed in addition to the EMTS Project Coordinator who will act as Subcommittee chairman.

Technical reviewers will complete their review of the proposal and will submit their recommendations to the Project Coordinator within two weeks after receipt of the proposal. The recommendations of the Technical Review Subcommittee will be presented at the next regular monthly meeting of the Steering Committee. Technical reviewers and the author may be asked to attend this meeting to discuss the merits or shortcomings of a proposal.

If a proposal is disapproved, the Steering Committee will return the proposal to the author with recommendations for revisions if the Committee believes the proposal could be made

acceptable. A revised proposal would then be submitted as above. The number of times a proposal could be revised and resubmitted would be left to the discretion of the Steering Committee.

4.3 AUTHORIZATION

When the Steering Committee approves a proposed study, the EMTS Project Coordinator will notify the principal investigator in writing within ten working days. The Project Coordinator shall have authority to sign this authorization on behalf of the Steering Committee. Concurrently, copies of the authorization shall be sent to all members of the Steering Committee. As a courtesy, the Project Coordinator should notify the principal investigator of the Steering Committee decision by telephone as soon as possible.

The EMTS Project Coordinator also will enter the new study into the automated project tracking system at EMSL-RTP. By accepting the approval of the Steering Committee, the principal investigator agrees to follow the approved study plan and to provide monthly progress reports to the Project Coordinator. These reports will be used as input to the tracking system and to keep all the participants of the EMTS Project informed in order to foster the greatest degree of cooperation.

5. PROCEDURES AND REQUIREMENTS TO CONDUCT A STUDY

It is important to the success and longevity of the EMTS Project that prospective users of the site cooperate with the state and local officials as well as with the EPA managers. This section addresses three areas of cooperation that benefit both the principal investigator and the Project: study management, field and systems audits, and public relations.

5.1 STUDY MANAGEMENT

One person, the principal investigator, will be responsible to the EMTS Steering Committee for the proper conduct of the study. The principal investigator (PI) will be the first author of the study design and will be the manager of the study operations. The PI will be responsible for logistics, obtaining contractors, supervision of field operations, maintaining sample control, arranging for sample analysis and data analysis, writing progress reports, and acting as liaison for the EMTS Steering Committee and the study personnel.

Within EPA such a person would likely be called a Project Officer for that study. An EPA project officer typically makes use of contractors to carry out most of the tasks listed above. However, no matter what operations are delegated to the contractor, the project officer for the study is the principal investigator as far as the EMTS Steering Committee is concerned and is solely responsible for the conduct of his study.

The PI will be expected to be on site during the field operations of a study. The Steering Committee may wish to meet with the PI on occasion before field operations begin to help establish contacts in the community and to meet periodically during the course of the study to facilitate information flow. It will be the aim of the Steering Committee to help the PI in every way it can.

All studies will be entered into a management tracking system at RTP. This system will be used to optimize resources when there is more than one study being conducted at once. The PI shall provide information to the EMTS Project Coordinator as needed for the tracking system. The EMTS Project Coordinator will provide the PI with all the latest information concerning

activities of the EMTS participants and other principal investigators.

Figure 4 presents an organization chart which shows the relationships and responsibilities of elements of study management. The Steering Committee has the overall authority for activities under the EMTS Project. The two Advisory Committees represent the public interests in the areas of local environment and commerce. The Public Relations staff, which is a unit with the Chattanooga-Hamilton County Air Pollution Control Bureau, is directly responsible to the Steering Committee and is responsible for carrying out the public relations policies of the Steering Committee. The Project Coordinator is also directly responsible to the Steering Committee and is responsible for coordinating the technical aspects of the EMTS Project. Thus the principal investigator and the personnel responsible for the quality assurance, data management, and data analysis functions all report to the Steering Committee through the Project Coordinator.

Identities of the boxes in Figure 4 are as follows: The memberships of the Steering Committee and its Advisory Committees are listed in Tables 2, 3, and 4 respectively in Section 1. The Project Coordinator is an EPA employee identified at the beginning of Section 4. Quality assurance for the EMTS Project is the responsibility of the EPA/Environmental Monitoring Systems Laboratory-Las Vegas, Nevada. Data management is being handled by the EPA Environmental Monitoring Systems Laboratory-Research Triangle Park, North Carolina. Data analysis tasks are of two types, statistical and spatial. Assistance with statistical analyses will be available from NSI, a contractor to the Environmental Monitoring Systems Laboratory in Research Triange Park. Assistance with spatial analyses will be available from Lockheed EMSCO, a contractor to the EPA Environmental Monitoring Systems Laboratory in Las Vegas.

The quality assurance and data analysis functions depicted in Figure 4 only pertain to data being prepared for inclusion into the EMTS data base. These functions will not be provided to a principal investigator in order that he can draw conclusions from his study. Principal investigators are expected to provide resources for the analysis of their data and for the control of its quality. See Section 2 for support which will be available to site users.

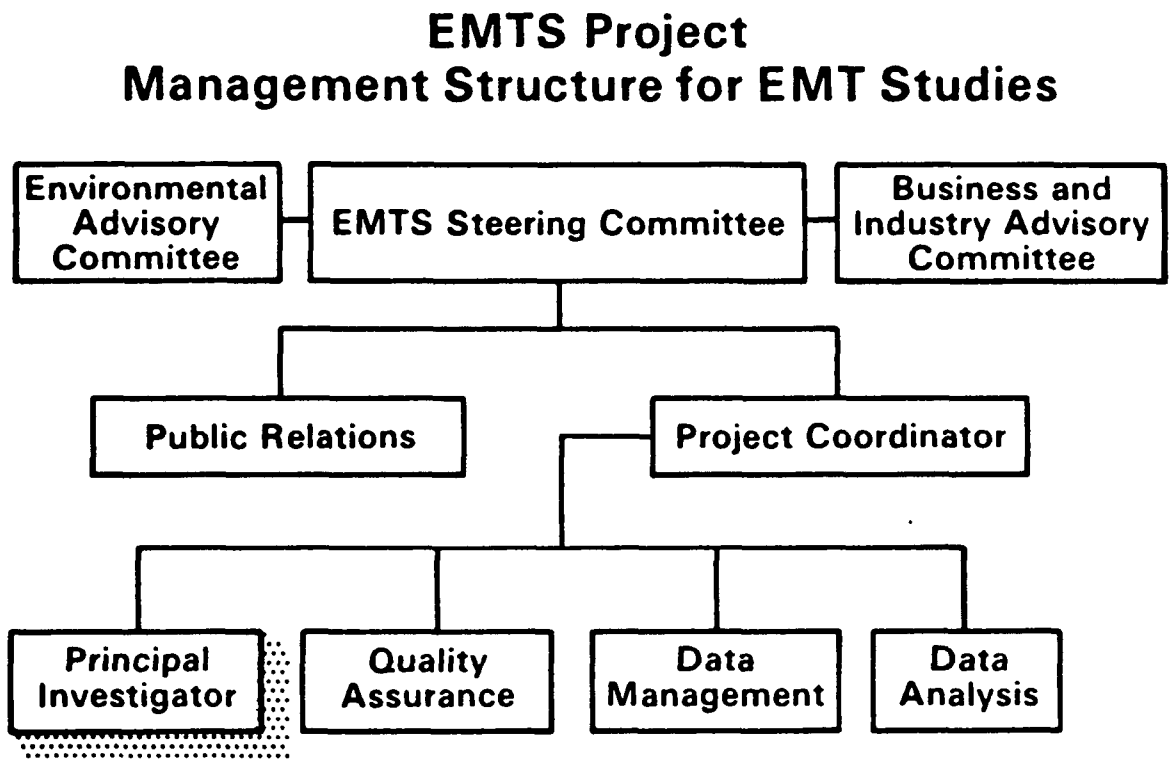

Figure 4. Study Management Structure.

5.2 FIELD AND SYSTEMS AUDITS

An approved study plan will include the details of a quality assurance program for the study. All such QA programs will include field and systems audits. The PI must describe in the plan the equipment and techniques that he plans to use. EMSL-LV will then work with the PI to design and schedule audits specific to the needs of the study.

In a systems audit, the QA staff reviews all the quality control procedures being used during the course of a study and compares the actual practices observed to those described in the approved quality assurance program plan. The QA agent for the EMTS Project may provide spiked and blank samples to be analyzed by the laboratory handling the samples for the study. The QA Agent also may collect duplicate or split samples from the study to analyze in its QA laboratory.

In field audits the QA staff provides independent calibrations of equipment by using different standard reference materials. A field audit can detect problems with calibration equipment that might otherwise go unnoticed by field personnel. At a minimum a field audit should be scheduled just before a sampling or monitoring system begins collecting data for a study and again at the end of the data collection period. For long term studies, additional periodic field audits may be indicated.

The results of field and systems audits will be compiled into QA reports and will be furnished to the PI and the Steering Committee. It will be the responsibility of the PI to take corrective action if necessary to keep the data quality of a study within the data quality objectives stated in the approved study plan.

5.3 PUBLIC RELATIONS

Public relations for the EMTS Project is being handled by the Chattanooga-Hamilton County Air Pollution Control Bureau (Bureau). Because the main conduit of information for the EMTS Project, for its associated studies, and for the public will be the EMTS Steering Committee, it is essential that PI's maintain a close association with the Steering Committee during the course of a study. The Bureau has a long successful history of providing technical information to the news media and to the public. Because of the high degree of public interest in the EMTS Project and because of the possible sensitivity of the

public to perceived or real effects of studies on business and environmental interests, an effective public relations program is vital to the Project. Hence, the PI's are to inform the Bureau in advance about and allow the Bureau to participate in all public information efforts.

There are to be no public releases of information, no interviews, no announcements of press conferences, and no press conferences without first being cleared with the Bureau or Steering Committee.

Each approved study plan will address the degree of effect that the field operations or results of a study may have on the community in terms of resource requirements, community image, business and environmental interests, and benefits to the community. News releases and preliminary results from studies will be cleared through the Steering Committee. Certain studies may attract more attention from the press than others. It is vital to the longevity of the EMTS Project that principal investigators handle interviews by newspeople with candor and tact. It must be remembered that the purpose of the EMTS Project is to develop methodology for assessing human exposure to environmental pollutants and that this will help to assess the risk to human health throughout the nation; the purpose is not to pass judgment on the city of Chattanooga.

6. PROCEDURES AND REQUIREMENTS TO DOCUMENT A STUDY

This section discusses the preferred practices for documenting the results and quality assurance data of a study, the frequency of periodic reports during a study, the format of the final report, peer review requirements, and subsequent publications.

6.1 DATA VALIDATION

It is stated in the EMTS Data Management Procedures Plan that only validated data will be incorporated into the EMTS data base. The process of validation requires a judgment by the user of the data regarding the suitability of the data for an intended use. Such a judgment is usually based on an examination of the quality assurance reports and other ancillary information accompanying the data. For data generated by studies conducted at the EMTS, validation will be a joint responsibility of the QA Agent and the principal investigator.

The QA Agent will prepare reports based on the field and systems audits it conducts during a study. The PI will include the results of quality control procedures such as the values of split, blank, and spiked samples in his periodic and final study reports. Reports also should discuss the degree of success of attempted statistical analyses on study data and how well the data support study objectives. Comparison of study data to data generated in earlier, similar studies might be relevant. All of these things are considered in judging whether or not a data set is deemed valid for a particular use. Generally, in the case of the EMTS Project, the expected use of data will be to compare new methods to old ones or to validate methods in the area of human exposure assessment. How the data must be used to accomplish these ends is left to the principal investigator, subject to peer review.

6.2 REPORTING REQUIREMENTS

To support the management and public relations activities of the EMTS Project, principal investigators are asked to provide monthly reports to the Project Coordinator during the course of a study. The purpose of these periodic reports is to keep the Steering Committee, and hence the other EMTS participants, reasonably up to date on study progress.

Additionally, monthly reports will be used by the Project Coordinator as a source of data for his project tracking system.

Monthly reports can be in the form of a letter or memorandum which includes the following:

1. Study name and tracking system identification number (number assigned by the Project Coordinator)

2. Name and affiliation of principal investigator

3. Period of performance (typically from the first day to the last day of a month)

4. Progress to date (by tasks or milestones as identified in the project tracking system)

5. Problems

6. Projected work for the next reporting period

Principal investigators are asked to provide interim results of special interest to the local community whenever they occur. Usually such results can be reported in the monthly reports, but occasionally special releases of information may be warranted. Such special releases will be handled by the public relations staff of the Chattanooga-Hamilton County Air Pollution Control Bureau. The conduit for this information will be via the EMTS Project Coordinator, or if he so delegates, directly to the public relations staff in Chattanooga.

Every study must have a final report. Principal investigators are asked to follow EPA Office of Research and Development report format requirements for final reports. The most recent guidance from ORD is Handbook for Preparing Office of Research and Development Reports, EPA-600/9-83-006, RevisedMarch 1986, and it will be made available to principal investigators by the Project Coordinator. Due dates for final reports will be negotiable with the Project Coordinator on a case-by-case basis. A reasonable amount of time will be allowed for data validation and analysis, but the results of studies will be awaited eagerly by all participants.

Non-EPA principal investigators may have different reporting schedules or formats required by their own agencies. Such differences should be worked out with the Project Coordinator before field operations begin. It will be EMTS

policy to be as flexible as possible in order to spare principal investigators unnecessary work.

An executive summary of the final report shall be prepared by the principal investigator. This document will be written for the EMTS Steering Committee and the EMTS Advisory Committees. It also will be used by the public relations staff to prepare news releases or for distribution to interested parties. The principal investigator should consult the public relations staff when preparing the executive summary.

6.3 PEER REVIEW

Final reports, executive summaries, and data of studies conducted at the EMTS will be subject to EPA peer review requirements. Guidance for peer review of EPA reports will be provided by the Project Coordinator. In general, two technical reviewers are required, one of whom must be from outside the reviewers are required, one of whom must be from outside the agency. In the case of non-EPA funded studies, one of the technical reviewers should be from outside both the funding agency and the EPA. Peer reviewers will be selected by the principal investigator. Reviewers will be asked to document their comments in a letter or memorandum to the author with copies to the Project Coordinator. The author will document his response to the review comments, describing which were incorporated and rebutting the others, in a cover letter accompanying the revised report. EPA has internal forms to track the progress of the review process, and the author may wish to use them. Non-EPA agencies preparing EMTS study reports may wish to use their own equivalent internal forms for this purpose. The mechanics of accomplishing the peer review must be worked out with the Project Coordinator.

The executive summary should accompany the final report when it is sent for review. After the reviews are completed, the author shall prepare a package for review by the EMTS Steering Committee consisting of the executive summary, letters and comments from all reviewers, and the letter containing the author's rebuttal. Curricula vitae of the reviewers also should be available to the Steering Committee. (Typically these would be acquired when reviewers were selected.) The final report itself must be made available to the Steering Committee on request, although the Steering Committee normally will accept the opinions of its appointed technical reviewers and the peer reviewers on technical matters. The Committee is more interested in the political effect that the study results may have on Chattanooga and usually will rely on the executive summary for its needs.

Authors should make every attempt to address any questions or problems the Steering Committee may have with either the final report or executive summary. Although no information will ever be suppressed, sometimes the wording and manner of presentation can make a lot of difference. Authors should always keep in mind the sensitivity of the community to bad press.

6.4 PUBLICATIONS

Final reports and executive summaries should be published by the funding agency in its customary manner.

Principal investigators are encouraged to publish papers based on their work at the EMTS. The usual rules required by EPA will be followed. For articles to be published in peer-reviewed journals, EPA requires no other peer review, but laboratory level clearance is required, and EMTS Steering Committee clearance will be required. For presentations not to be published, agency policy will be followed, plus a courtesy draft copy should be made available to the EMTS Steering Committee.

7. PROCEDURES AND REQUIREMENTS TO INCORPORATE STUDY DATA INTO THE EMTS DATA BASE

Whereas the benefits to users were discussed in Section II, the benefits to the EMTS Project are discussed here. The objective of the EMTS Project is to provide a site for studies, but the results of the studies are what will fulfill the purpose of the Project; namely, to advance the state of the art of assessing human exposure. The payoff for the Project is to incorporate data from the studies into the EMTS data base, further characterizing the site for subsequent users and providing additional data to analyze in new ways. It is requested that all principal investigators who conduct studies at the EMTS agree to donate their data to this cause. The EMTS Steering Committee will decide on a case-by-case basis whether data should be included in the EMTS data base. Because the data base will be accessible by other investigators and will be available to the public, sensitive and confidential data will not be added to the EMTS data base. Data should be made available in a machine-readable format, preferably on 9-track magnetic tape, in ASCII, and should be accompanied by a comprehensive data dictionary. This section discusses the design of the EMTS data base, the computer equipment and software being used, and an overview of the data management procedures required to enter new data.

7.1 EMTS DATA BASE DESIGN

The EMTS data base is a collection of data sets that have little more in common than that they are relevant to the study area, i.e., the Chattanooga MSA, and that they all have been described in the EMTS Inventory File. The Inventory File is maintained by the Environmental Monitoring Systems Laboratory in Las Vegas on an IBM PC using dBASEIII. Each record in the Inventory File represents one data set. The Inventory File contains the name of the data set, the person to contact and location of the data set, some information about the media and parameters measured, where and when the data were collected, and the storage media and computer system (if any) where the data set resides. The Inventory File also contains information concerning the quality of the data. By querying the Inventory File, users can determine what data sets are available in the EMTS data base. Users can also determine whether the data will be suitable for their needs. Access to the Inventory File can be arranged through the EMTS Project Coordinator.

Data for the EMTS data base are of two major categories: tabular and spatial. Tabular data constitute lists or tables of numbers or nominal variables, such as the names of monitoring sites and the associated ozone concentrations as a

function of time. Spatial data sets, however, are most easily depicted as maps which, for example, contain such features as lines representing roads, or polygons representing census tracts. Both tabular and spatial data may be digital or nondigital. Nondigital data are usually stored on paper and must be digitized before they can be manipulated by computer. Both tabular, spatial, digital, and nondigital data sets are listed in the Inventory File. If a user discovers that a data set he wishes to use is nondigital, arrangements can be made within the context of the EMTS Project to have it digitized. A reasonable amount of such support will be borne by the Project, and requests will be considered on a case-by-case basis.

Data sets in the EMTS data base can be processed by two computer systems, an IBM 3090-200 at the EPA National Computer Center in Research Triangle Park, North Carolina, or a DEC VAX 11/785 operated by Lockheed EMSCO in Las Vegas, Nevada. The tabular portion of the EMTS data base resides on the IBM. The spatial portion resides on the VAX.

The designated storage system for tabular data in the EMTS data base is FOCUS, a relational data base management system on the IBM 3090. (See Appendix A.) FOCUS is used to reorganize data so that EMTS users may check data quality or perform statistical analyses by using other software packages available on the IBM. An important use of the data base management system will be to prepare data sets for the Geographic Information System (GIS). No particular format is required by the EMTS data base. Virtually all retrospective data sets in the EMTS data base have unique formats because they were collected and stored for individual purposes. That is why a relational data base management system with great flexibility was chosen for the EMTS Project. EMTS users may store their newly collected data in any format they wish so long as the required information is included. If the data might be used in the GIS, time would be saved if data were stored in a format that has already been used before by ARC/INFO. Formats are discussed further in the following section, Data Entry.

An important concept to keep in mind is that data accepted into the EMTS data base may be used in the geographic information system. Therefore, all data must be referenced in space and time. Sampling locations must be located by latitude/longitude or Universal Transverse Mercator (UTM) grid coordinates. UTM is preferred. The smallest area size coded into the GIS for demographic variables is the census block.Data must be georeferenced to either a point location or an area location. Proper coding will require consultation with the EMTS Project Coordinator. Elevations may also be coded when appropriate. Units are meters above mean sea level. Time must be coded to at least the nearest minute local time (Eastern

Daylight or Standard Time) and include year, month, day, hour, minute.

Spatial analyses are performed by ARC/INFO on the VAX in Las Vegas. All spatial data sets of the EMTS data base will be stored by this geographical information system. The power of the GIS lies not only in its ability to manipulate and analyze spatial information, but in its ability, by means of the georeference information discussed above, to relate tabular data to map features so that tabular data can be analyzed spatially as well. Tabular data sets can be tailored by a data base management system for spatial analysis by ARC/INFO. When tabular data are referenced to a map feature, the data are said to become attributes of the map feature.

Briefly, data in the GIS data base are organized into a group of directories and subdirectories on the VAX. The overall project directory is called JO 6534 (job order number for EMTS). Within JO 6534 are several subdirectories containing files of base maps and files of associated attributes. The subdirectories are organized by geographic unit and scale. For example, the subdirectory TEMPLATE contains files of county boundaries for the entire Chattanooga MSA. There are six directories containing files for each of the six counties. There are 54 directories containing files for each of the 54 7.5-minute quadrangles which are required to cover the MSA. Spatial data in the quadrangle directories are derived from 1:24,000-scale and 1:100,000-scale Digital Elevation Model and Digital Line Graph tapes. Figure 5 illustrates the relationships of the data directories developed so far for the EMTS GIS data base. More information about the GIS software, ARC/INFO, is given in Appendix B.

7.2 DATA ENTRY

Most data produced by studies will be tabular and, hopefully, digital in nature. The first step towards entering study data into the EMTS data base will be to get them into the data base management system on the EPA IBM 3090-200 in Research Triangle Park. Although it is not the intention of the EMTS Project to provide key entry services to principal investigators, a limited amount of key entry support may be available on a case-by-case basis. In general, principal investigators are asked to enter their own data and to submit them on tape. EPA, EPA contractors, and others who have independent access to the NCC computers can enter their data directly into their own files for subsequent transfer to the EMTS data base management system.

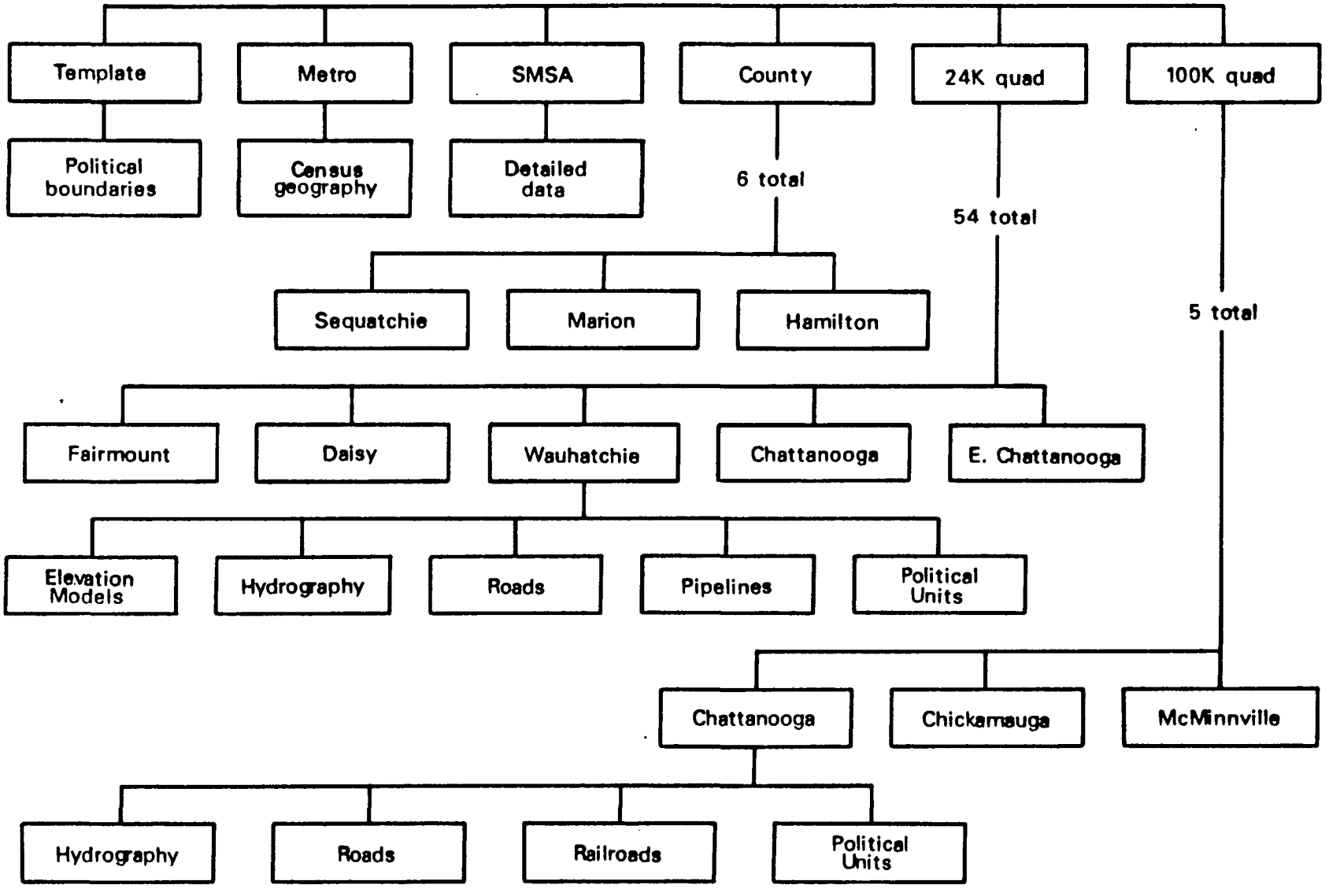

Figure 5. Data Structure for the EMTS GIS.

In order to incorporate tabular data into the GIS data base, a subroutine must be written to transfer data from wherever the data reside to an ARC/INFO file. To minimize the number of such subroutines, data sets that are similar should be stored in the same format so they may be retrieved by the same subroutine. Data entry formats are being designed as the EMTS data base grows. Users should consult with the EMTS Project Coordinator to determine if a format already exists for their data.

There may be occasions when studies produce spatial data. Examples might be boundaries around a study area, e.g., a neighborhood that has not been delineated on any of the existing maps in the GIS, or contours from some environmental pollution model. When required for spatial analysis, such features can be digitized in Las Vegas.

In most cases map features will be drawn and digitized at the 1:24,000 scale. The cartography staff will redraw map features as an overlay of a 1:24,000 USGS topographic base map. The drawing of the new features is called a map manuscript. The map manuscript then will be digitized, and the resulting new file will be entered into ARC/INFO. A computer plot of the new map will be produced on transparent Mylar and will be manually compared to the base map by overlaying it on the base map. The new digital map file will be edited if necessary and then will be stored as a new coverage in ARC/INFO. A more detailed description of this process can be found in the EMTS Quality Assurance Program Plan.

8. SUMMARY

The Environmental Methods Testing Site (EMTS) is the Chattanooga, TN-GA, Metropolitan Statistical Area as defined by the Bureau of the Census. The site consists of Hamilton, Marion, and Sequatchie counties in Tennessee; and Catoosa, Dade, and Walker counties in Georgia. The Chattanooga area was selected by the Environmental Protection Agency in cooperation with the state and local governments by using a set of comprehensive selection criteria. The EMTS is being used to conduct a series of field studies in a common, well-characterized location which is considered advantageous and cost effective. The purpose is to advance the state of knowledge about methods to measure human exposure to environmental pollutants.

Advantages to principal investigators who choose to use the EMTS are as follows:

- Political support from state and local governments and an established management team through EPA laboratories and their contractors

- A common data base that has been collected by EPA and its participating contractors, the state of Tennessee, the Chattanooga-Hamilton County Air Pollution Control Bureau, and the Tennessee Valley Authority

- A quality assurance program being administered by the Environmental Monitoring Systems Laboratory at Las Vegas, Nevada, and its contractor, the Environmental Research Center of the University of Nevada-Las Vegas.

- A data management program being administered by the Environmental Monitoring Systems Laboratory at Research Triangle Park, North Carolina, and its contractor, Northrop Services, Incorporated

- Computer processing for statistical analysis of data collected at the EMTS on the EPA IBM system at the National Computer Center

- Spatial analysis of new and old data with a geographic information system on a VAX 785 at the Environmental Monitoring Systems Laboratory at Las Vegas, Nevada, operated by its contractor, Lockheed Engineering and Management Services Company

- Because of the benefits listed above, principal investigators who use the EMTS can expect to conduct their studies at a lower cost than if they went to another city

A very large data base has been compiled for the EMTS be accessed by prospective users of the site. Users can determine what data are available, what the quality is, and where and when the data were collected.

To gain access to the EMTS and its supporting programs, prospective users must contact the Project Coordinator, Robert Jungers, EPA, Research Triangle Park, telephone: (919) 541-7870 or FTS 629-7870. Users must demonstrate that they have funding for their proposed field work and must submit a study plan through the Project Coordinator for approval by the EMTS Steering Committee.

Approved studies will be conducted in cooperation with the EMTS Steering Committee which will facilitate communication among the various EMTS participants. Field and systems audits may be performed by a designated quality assurance agent for all studies. The Chattanooga-Hamilton County Air Pollution Control Bureau will provide public relations services for all studies.

Principal investigators must provide monthly progress reports to the Steering Committee during the course of a study, and a final report and executive summary at the conclusion of a study. Final reports will be subject to peer review. Users are encouraged to publish their results.

When and if newly collected data are validated, principal investigators are encouraged to contribute their data to the EMTS Data Base so that other users of the EMTS can benefit from their work.

APPENDIX A

SOFTWARE AVAILABLE ON THE NCC SYSTEM

The National Computer Center operates three principal data processing facilities: an IBM 3090-200, a Sperry 1100/82, and a minisystems operation consisting of two DEC VAX 11/780's, an IBM 4341, and two PDP 11/70's. The systems are managed by the National Computer Center, within the Office of Data Processing (ODP) of the EPA Office of Administration and Resources Management (OARM-RTP).

DATA BASE MANAGEMENT SYSTEM

FOCUS

FOCUS is a comprehensive information processing system designed to run interactively on the IBM 3090-200 mainframe as well as on IBM PC microcomputers. It contains features for describing external files as well as for describing FOCUS files for generating reports. It provides a dialogue manager incorporating full-screen processing capabilities that can prompt for data, and it performs validation of data based on user definitions. Replacing most conventional programming with nonprocedural English sentences, it attempts to avoid cryptic, computer-inspired notations. FOCUS is powerful enough to build menu-driven applications yet easy enough for nontechnical end users to perform their own ad hoc queries and reports.

The capabilities of FOCUS are best viewed in terms of the application processes described by the following components:

1. On-line data entry, editing, and updating of master data bases as a single, continuous process.

2. On-line data entry, editing, and creation of transaction files, followed by batch updating of master data bases, as two separate processes.

3. Sub data base creation which consists of extracting records or fields, or both, from a production data base (or bases) and storing them in a data base structure for back-end processing. Sub data base creation may involve transmission of files to or from PC's and transmissions from the NCC mainframe to other mainframes of minicomputers.

4. Back-end processing which primarily consists of retrieval, presentation, and analysis of data maintained in the transaction files, master data bases, or sub data bases. Back-end processing may involve canned (routine) processing and ad hoc activities. Canned processing is a standardized procedure which can be performed by executing a few commands. Typically, canned programs are repetitive or commonly used functions (e.g., standard, routine reports and queries).

FOCUS is an integrated information control system that provides a non-procedural English-like command language and a data base management system. Its three major capabilities are retrieval and analysis, data base structure and storage, and data maintenance.

Retrieval and analysis provides the following capabilities:

1. FOCUS and PC FOCUS allow access to FOCUS and non-FOCUS files. FOCUS can retrieve information from ADABAS, System 2000, IDMS, IMS, VSAM, Sequential, and FOCUS files.

2. A simple set of English-like commands, in concert with master file descriptions, allows quick generation of tabular reports and graphs.

3. The menu-driven, dialogue oriented, interactive statistical programs provide a comprehensive statistical analysis capability.

4. The graphics modules allow creation of simple business graphics such as bar charts, pie charts, and histograms.

FOCUS data bases use a shared relational structure data model. This model supports both simple and complex small or large volumes of data. The data base facility also provides dynamic file joining and logical file views. In addition, data encryption and security at the field-value level are available for FOCUS files.

For data maintenance, FOCUS has a full transaction processing facility including a data base editor, 3270 full screen processing, and central data base control for multi-user access and processing.

The developers of FOCUS have extended the capabilities of the system to the IBM PC/XT and PC/AT microcomputers. The personal computer version is compatible with the mainframe version. This compatibility includes the capability to

transfer application code and sequential files from the PC and then to have them executed on the mainframe and vice versa.

FOCUS has introduced the concept of "talk" technology which allows the most novice user to become quickly productive through the use of menu-driven questions that appear on a full screen terminal. For example, they may use TABLETALK to develop and execute reports and FILETALK to create data base file structures. The "talk" technology operates on both the mainframe and PC versions of FOCUS.

STATISTICAL SOFTWARE

Statistical Analysis System (SAS)

Statistical Analysis System (version 5.11) is an integrated system for data management and statistical analysis. It combines statistics routines, plotting, data manipulation, and report writing capabilities.

SAS has a PL/1-like language which is used to transform or delete variables, create new variables, create new data sets, merge data sets, and print all or part of a data set. SAS accepts data in most forms and can handle many input devices. The system also performs general data manipulation and many statistical functions including the following:

- Linear and nonlinear regression
- Analyses of variance and co-variance
- Multivariate analyses of variance
- Matrix manipulation
- Multiple and partial correlation coefficients
- Spearman's and Kendall's correlation coefficients
- Frequency and cross-tabulation tables
- Assorted printed and plotted output

Statistical Package for the Social Sciences (SPSS-X)

The Statistical Package for the Social Sciences is an social science data. In addition to descriptive statistics, simple frequency distributions, and cross-tabulations, the package contains the following:

- Simple correlation
- Partial correlation
- Means and variances for stratified subpopulations
- One-way and n-way analysis of variance
- Multiple regression
- Discriminant analysis
- Scatter diagrams

- Factor analysis
- Canonical correlations
- Guttman scaling

The package has facilities to generate new variables which are mathematical or logical combinations of existing variables, to recode variables, and to sample, select, or weight specified cases.

Economic Software Package (ESP)

The Economic Software Package is a computer language for the statistical analysis of time series by ordinary least squares method or the two-stage least squares method. It is designed to carry out the computational and data processing steps which occur routinely in economic research. ESP is a revised and extended version of an earlier system called TSP (Time Series Processor).

Input to ESP is made through the system's own free format language of the system. ESP features include the following:

- Fitting and extrapolation
- Matrix operation
- Time series plots
- Statistical measures
- Normalized random number generator
- Scatter diagrams
- Exponential trend lines

International Mathematical and Statistical Library (IMSL)

The International Mathematical and Statistical Library is an extensive collection of mathematical and statistical subroutines. Some of the subroutines and their groupings include the following:

- Categorized data analysis
- Eigenvalue analysis
- Forecasting
- Econometrics
- Analysis of experimental design data
- Basic statistics
- Time series analysis
- Generation and testing of random numbers
- Interpolation
- Approximation
- Curve fitting
- Linear algebraic equations
- Sampling
- Utility functions

- Vector and matrix arithmetic
- Linear programming

Biomedical Computer Programs (BMDP)

The Biomedical Computer Programs are a comprehensive and integrated library of statistical programs. These programs may be loosely classified into six series: Data Description, Frequency Tables, Regression Analysis, Analysis of Variance, Multivariate Analysis, and Special (including nonparametric statistics and cluster analysis).

BMDP offers the user a broad set of descriptive and analytical procedures. These procedures have convenient defaults, offer supplementary printer graphics, and have thorough, comprehensive documentation. Data grouping or selection may be affected through the control language. The generation of new variables, as well as data modification, can be accomplished through the use of a control language or the inclusion of a FORTRAN subroutine in the BMDP run.

- Univariate statistics (means, skewness) and histograms
- Bivariate F and t tests and comparison of cells
- Scatter plots, probability plots
- Missing values estimates, patterns, and correlations
- Multiple linear, stepwise, best subsets, principal component, and polynomial regression, as well as nonlinear regression
- Analysis of variance of fixed effect or mixed models, with repeated measure and unequal cell size options
- Nonparametric statistical analysis
- Factor analysis, canonical correlation, discriminant analysis
- Cluster analysis on case, variables, or blocks

APPENDIX B

INTEGRATED SPATIAL DATA ANALYSIS SYSTEM

The Environmental Monitoring Systems Laboratory at Las Vegas (EMSL-LV) provides EMTS with the capability to perform a variety of spatial analyses of environmental data. Experts in remote sensing and geographic information systems (GIS) work in a highly sophisticated hardware and software environment to provide an entirely new way of investigating environmental problems. GIS analyses provide mechanisms for linking relational database functions with a computer mapping system, and this process allows locational variables and relations to become evident. More importantly, GIS provides the capability for models to interact with the data as well as for data layers to interact with each other in a common framework.

The EMSL-LV will receive subsets of the relational databases available from the NCC, will digitize map data, and will procure spatial data already in digital format. These data sets will be entered into the Integrated Spatial Data Analysis System (ISDAS) and will be analyzed by using the GIS to provide maps, files, and statistics which will enable EMTS investigators to assess environmental monitoring methods.

HARDWARE ENVIRONMENT AT LAS VEGAS

Two separate systems are available at EMSL-LV. The primary Laboratory computer is a VAX 11/785. This machine is linked to the NCC mainframe through a 9600 baud dedicated line. A variety of communications ports connect users throughout the EMSL-LV to this machine as well as to the NCC IBM and to the Department of Energy Univac. EMTS data sets may be passed directly to EMSL-LV through the RTP-to-LV link. The Laboratory VAX supports several databases as well as a variety of statistical analysis packages for general scientific support.

The ISDAS is supported by two computers linked with an ETHERNET. The principal GIS machine is also a VAX 11/785, and the principal image processing machine is a Concurrent Computer Corporation (formerly Perkin-Elmer) Model 3210. Figure B1 outlines the basic configuration of the Integrated Spatial Data Analysis System. The primary design criterion for this system was to provide maximum processing power for relatively few users, enabling them to handle large spatial data sets. The

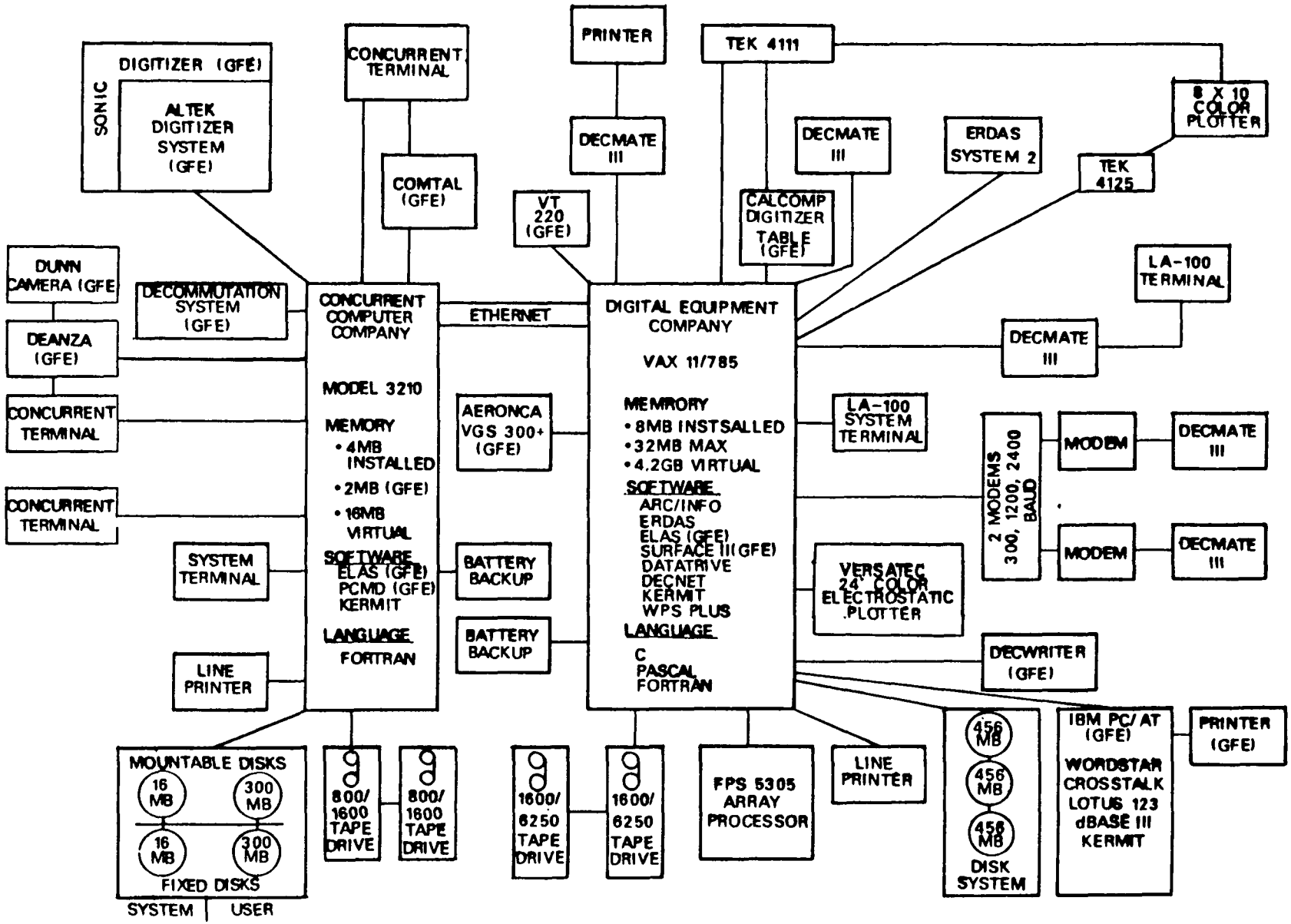

Figure B1. Integrated Spatial Data Analysis System.

following discussion refers to the ISDAS and not to the Laboratory System, unless stated otherwise.

GIS Hardware

The ISDAS VAX is configured with 8 megabytes of main memory, two 1600/6250 bpi tape drives, three RU-81 456 MB disk drives, user control store, and 16 asynchronous input lines. External communication is provided by one modem set at 300/1200 baud and another modem set at 2400 baud. No direct link to the ISDAS VAX is available to remote users other than by modem. However, users with access to the Las Vegas switch can have the switch call the ISDAS VAX modem. This then utilizes a local call rather than a long-distance call. All other communication ports are occupied by internal RS-232 connections at 9600 baud. A Floating Point Systems Model 5305 Array Processor is linked to the system for the processing of large matrices of data.

Much of the EMTS data is input from tape and is already in digital format (such as data from the NCC IBM, photogrammetric workstations, or multispectral scanner data). Data that are in analog (map) format are digitized by using a Calcomp 9100 digitizing table (48 inches x 60 inches surface) with a resolution of 0.003 inch. For some special applications, image data from sources such as maps or aerial photographs can be captured by using dual video camera systems on the Aeronca VGS 300+ video digitizing and analysis system, can be processed on its IBM PC/AT system, and can be transferred to the VAX by using the KERMIT file transfer protocol or floppy disks.

A Tektronix Model 4125 and a Model 4111 graphics terminal are used as workstations for digitizing, analyzing, and displaying vector-oriented graphics. Five DECmate III workstations are used as general purpose terminals for the VAX and can also serve as stand-alone word processors. An LA-100 terminal provides convenient hardcopy. Several IBM PC/AT computers, including an ERDAS workstation and the VGS 300+ system, can also be used as VAX or Concurrent Computer terminals, either with direct connections or through modem links. This allows easy file transfers from IBM floppy disks or hard disks to or from the VAX.

Raster data analysis is provided by using an ERDAS IBM PC/AT System 2 connected to the VAX with an IEEE 488 interface. This system functions as both a stand-alone system or as a workstation to the VAX. A 19-inch monitor provides raster

display in a 512- by 512-pixel three image plane truecolor format.

The results of data analysis may be output to tape or toIBM-compatible floppy disk. If hardcopy is desired, maps may be produced in color on either of two devices. The primary color plotter is a Versatec Model 7224 Electrostatic Color Plotter. This instrument plots at a resolution of 200 dots per inch on either paper or plastic media which is 24 inches in width and of any length desired. The secondary plotting device is a Tektronix Model 4692 Color Graphics Copier. This plotter is a 8.5 inch x 11 inch media rotating drum ink jet device. The 4692 is connected to both the Tektronix 4125 and 4111, andthis interconnection provides color reproductions of the displays on both paper and clear acetate.

Image Processing Hardware

The principal image processing machine is a Concurrent Computer Corporation Model 3210 minicomputer with 4 megabytes of main memory in 32 bit words, a Winchester 300 MB fixed disk, a 300 MB mountable disk (with multiple disk packs), two 800/1600 bpi tape drives, and a 300 lpm line printer. This CPU

Raster (image) data such as LANDSAT or SPOT satellite data or digital elevation models, are usually entered into the system through tape. Other examples of raster data entry are (1) files transferred from an Aeronca VGS 300+ video graphics system and (2) direct decommutation of high density digital tapes of airborne multispectral scanner data (MSS).

Analysis is provided by using a Comtal 8000 and a DeAnza ID 1124 image processing system. The Comtal is a 512- x 512-pixel, single image plane, pseudocolor display device, andthe DeAnza is a 1024- x 1024-pixel, three image plane, truecolor device. Both systems are connected to the Concurrent System as direct memory access (DMA) devices through a selector channel (SELCH) and interface board. Additional image processing is available on the IBM PC/AT-based ERDAS and Aeronca VGS 300+ systems connected to the VAX.

Raster hardcopy output is provided by a Dunn Instruments camera system linked to the DeAnza display (1024 x 1024) and by the Versatec Electrostatic Color Plotter.

SOFTWARE ENVIRONMENT

Although much of the software used by the ISDAS is available from commercial sources, the state of the art and technology is such that it must be considered developmental.

Certain portions of the software are more mature and could be considered operational. However, many of the functions of the software need considerable programmer support. Therefore, the interdisciplinary team which handles the analyses for EMTS includes software engineers, mathematicians, and computer scientists, as well as disciplinary scientists. The overall environment is one of growth and development, with new software and techniques for analysis being developed constantly.

GIS Software

ARC/INFO, a product available from Environmental Systems Research Institute, Inc. (ESRI), is the primary GIS input and analysis tool. This software provides all the necessary functions for digitizing, editing, combining, and plotting GIS data. The software combines a relational database language (INFO) available from Henco, Inc., with computer graphics and GIS analysis software (ARC) to provide a complete package of GIS functions on the ISDAS VAX 11/785.

In ARC/INFO, maps are usually represented as a collection of points which describe points, lines, and polygons. This type of representation is called "vector." The software maintains the x, y coordinate pairs which describe these points in several files with specialized formats and also maintains in several files with specialized formats and also maintains the attributes which relate to these points in INFO files. The program, ARC, relates the coordinate pair data to the attribute (thematic) data through internal ID numbers common to both sets of data files. INFO allows up to 10 files to be "related" in a relational chain, and each file may contain multiple attributes.

ARC/INFO files are topologically structured. This means that the spatial relationships between map features are defined. Points are the simplest case and are simply represented by coordinates and associated attributes (topographic elevation, pollutant levels, etc.). Lines are represented as arcs which have "nodes" (starting and ending points) with a linked collection of points between them. Arcs may have attributes assigned to them (such as "County Road 49"), and they may have attributes that bound them on the left and right (the line forms the boundary between soil 1 and soil 2). Arcs which share nodes are identified and may form polygons. Polygons may contain up to 5,000 arcs of 500 points each. Tables of attribute data are maintained in INFO for points, lines, and polygons.

The maps are organized into groups called "coverages." Usually, point, line, and polygon coverages are kept in separate files even though they represent the same theme (or

subject). Additionally, the coverages may be divided into "modules" (or "tiles") which are edge-matched portions of the database. (For the EMTS database, the matrix of 54 7.5-minute USGS Quadrangles forms the tile structure of the digital database.) The modules need not be rectangular, although that is usually the convention. Thus, analysis may focus on selected coverages (such as soils, roads, and streams) for selected modules (such as the Fairmount Quadrangle).

Interactive display and analysis are accomplished by using a combination of ARC, INFO, TIN, and NETWORK. These programs form the basic tools for spatial analysis of vector data. ARC/INFO is a combination of over 300 routines for the handling of digital cartographic and spatially associated tabular data. It is designed as a generic tool box for data entry, manipulation, analysis, and display. NETWORK is a series of procedures which manage, analyze, and display geographic networks, such as city streets, railroads, rivers, and utility lines. Functions include managing DIME files, interactive districting, optimum routing, address matching, and facility allocation testing. TIN is a set of routines for handling continuous data such as digital terrain models or results from trend surface analyses. Functions include contouring, point perspective (3-D) display, watershed modeling, slope/aspect analysis, Thiessen polygon calculation, cut-and-fill analysis, and digital terrain model analysis.

Additional trend surface analyses may be accomplished by using the SURFACE II contouring software.

Plotting on the Versatec Color Plotter is accomplished through the ARCOKIT routines interacting with special interface software from USGS and with custom software written at EMSL-LV.

Image Processing Software

Raster files are formatted quite differently from vector files. Each location on the image is represented by a cell or picture element (pixel) in which an eight-bit number resides. (The image is really a matrix of integers encoded to represent topographic elevation, spectral radiance, land cover class, etc.) These files may be extremely large, depending on the resolution of each pixel. EMSL-LV has translator programs to covert both ELAS and ERDAS raster data files to the ARC-GRID format and to the ARC/INFO vector format.

Raster data is handled by a combination of software routines residing on both the Concurrent Computer and the VAX. The NASA Earth Resources Laboratory Analysis Software (ELAS) forms the mainstay of the EMSL-LV raster processing capability. The ELAS package has over 200 analysis routines linked together.

EMSL-LV has added at least another 50 routines to the package for the processing of Aircraft MSS data and has extensively modified much of the basic software. The Concurrent system is the primary computer for the ELAS software, but a version of ELAS containing a limited number of functions is implemented on the VAX.

Additional raster processing is available on the VAX through the ERDAS image processing system and the ESRI routines, GRID and GRIDTOPO. The ERDAS software resides both on the VAX and on an IBM PC/AT that has been specially configured as a VAX workstation. The ERDAS software performs a variety of raster GIS and image processing functions including image display, enhancement, and classification which augment the ELAS functions on the Concurrent computer. ERDAS data files may be easily transferred to the ARC/INFO vector format, although it is useful in some cases to maintain the raster data structure.

GRID/GRIDTOPO is a software package, developed by ESRI, for raster GIS processing. It primarily functions as the translator between other gridded data formats and ARC/INFO, but it also contains some special purpose raster data handling routines for processing digital topographic data.

PROGRAMMING ENVIRONMENT

Software is usually generated in FORTRAN, which is supported on both machines. Special purpose routines are sometimes generated in C or PASCAL, which are supported only on the VAX. Each different data source usually requires some reformatting before being converted to ARC/INFO file structure; some data structures require extensive conversion and editing.

DATA COMMUNICATIONS

The most effective method of transferring data to the ISDAS is via 1600 or 6250 bpi tape in either binary or ASCII format. Small data sets may be transmitted via modem through the Laboratory Computer switch at a rate of 1200 baud.External communication with the ISDAS is possible at rates of up to 2400 baud, but the display software requires such large amounts of data that data transfers cannot be accomplished effectively at that slow speed.

EMSL-LV

INTEGRATED SPATIAL DATA ANALYSIS SYSTEM

CONCURRENT COMPUTER SYSTEM (FORMERLY PERKIN-ELMER)

MODEL 3210 CPU
4 MB MEMORY
POWER EXPANSION
56" CABINET
FLOATING POINT PROCESSOR
9 TRACK 800/1600 TAPE DRIVE (2)
300 MB REMOVABLE MEDIA DISK
300 MB FIXED WINCHESTER DRIVE
300 LPM LINE PRINTER & ACOUSTICAL CABINET
BATTERY BACKUP
8 LINE COM MUX (2)
3200 SELECTOR CHANNEL (7)
DMA EXPANSION CHASSIS
6100 VDU TERMINALS (3)
SYSTEM CONSOLE
ETHERNET HARDWARE
SELECTOR CHANNEL
EXPANSION CHASSIS

CONCURRENT SYSTEM SOFTWARE

OS/32
OS/32 MTM
FORTRAN 7-D
FORTRAN 7-Z UPGRADE
ELAS
ETHERNET
PCMD (DECOMMUTATION SOFTWARE)
CUSTOM IMAGE PROCESSING SOFTWARE

VAX 11/785 HARDWARE

11/785 CPU
8 MB MEMORY
BATTERY BACKUP
FLOATING POINT PROCESSOR
USER CONTROL STORE
456 MB WINCHESTER DISKS (3)
1600/6250 TAPE DRIVES (2)
16 ASYN 2 SYN CONNECTONS
BA11-KU EXPANDER BOX
DD11-D 2-SU FOR BA11

LA-100 TERMINAL (OPERATOR'S CONSOLE)
GENERAL PURPOSE DMA INTERFACE
300/1200/2400 BAUD MODEMS (6)
LETTER QUALITY PRINTER
DECMATE III TERMINALS (5)
285 LPM LINE PRINTER
ETHERNET HARDWARE
LA-100 TERMINAL

VAX 11/785 SOFTWARE

VAX VMS
WPS PLUS
PASCAL
C
FORTRAN 77
ELAS
ERDAS
ARC/INFO (SEE BELOW)
MODFLOW
SUTRA
GWPATH1
SURFACE II
CUSTOM IMAGE PROCESSING SOFTWARE
KERMIT
DECNET
DATATRIEVE
CUSTOM PLOTTING SOFTWARE
ETHERNET
G 7 H MICROCODE

TEKTRONIX HARDWARE

4125 TERMINAL
ADDED MEMORY
INTERFACE
AUTOCONVERGENCE
RASTERIZER
4111 TERMINAL
MODEL 4692 COLOR GRAPHICS COPIER

FLOATING POINT SYSTEMS HARDWARE

FPS 5305 ARRAY PROCESSOR
DEC UNIBUS HARDWARE

FLOATING POINT SYSTEMS SOFTWARE

DEC UNIBUS INTERFACE
PROGRAM DEVELOPMENT SOFTWARE
IMAGE PROCESSING LIBRARY
ADVANCED MATH LIBRARY

VERSATEC HARDWARE

MODEL 7224 ELECTROSTATIC COLOR 24" PLOTTER
MODEL 7024-20 MEDIA WINDER
MODEL 830-00 RASTER PROCESSOR MACHINE
MODEL 122-00 CONTROLLER INTERFACE

VERSATEC VERSAPLOT COLOR RANDOM SOFTWARE

USGS LINK TO ARC/INFO
CUSTOM PLOTTING SOFTWARE

ESRI SOFTWARE

ARC/INFO
GRID
GRIDTOPO
NETWORK
TIN
TEK IGL

INTERNET SYSTEMS ETHERNET SOFTWARE

IBM PC/AT SYSTEM 2 WORKSTATION HARDWARE
ERDAS PC IMAGE PROCESSING SYSTEM
ERDAS VAX IMAGE PROCESSING SYSTEM
SMARTTERM
IEEE 488 GPIB INTERFACE TO VAX
19" 512 X 512 4-CHANNEL COLOR DISPLAY

CALCOMP 9100 48" X 60" HIGH RESOLUTION DIGITIZING TABLET

LOCKHEED-DESIGNED DECOMMUTATION SYSTEM FOR DS-1260 DATA

10,000 BPI TAPE DRIVE
SCHLUMBERGER BIT SYNCHRONIZERS (11)
INTERFACE TO CONCURRENT SYSTEM

DEANZA ID1124 IMAGE PROCESSING SYSTEM

DUNN INSTRUMENTS RECORDER
1024 X 1024 3-IMAGE DISPLAY

COMTAL 8000 IMAGE PROCESSING SYSTEM

512 X 512 SINGLE CHANNEL DISPLAY

AERONCA VGS 300+ VIDEO INPUT AND ANALYSIS SYSTEM

IBM PC/AT PROCESSOR
512 X 512 VIDEO CAMERAS (2)
VGS 300+ SOFTWARE
KERMIT
14" 512 X 512 COLOR DISPLAY

IBM PC/AT SYSTEM

WORDSTAR 2000
CROSSTALK
KERMIT
LOTUS 123
dBASE III
1.2 MB FLOPPY DRIVE
360 K FLOPPY DRIVE
MONOCHROME GRAPHICS MONITOR
512 K MEMORY
OKIDATA 193 PRINTER

APPENDIX C

SUPPORT FACILITIES IN THE CHATTANOOGA AREA

The following list was compiled by the Chattanooga-Hamilton County Air Pollution Control Bureau (APCB) in March 1986. Users of the EMTS may find the list helpful for locating local professional services.

COLLEGES, UNIVERSITIES, AND TECHNICAL SCHOOLS

Chattanooga State Technical Community College (615) 697-4457

Sherry Hoppe, Ph.D., Dean
4501 Amnicola Highway
Chattanooga, TN 37406

Covenant College (615) 820-1560

Martin Essenberg, Ph.D., President
Scenic Highway
Lookout Mountain, GA 37411

Edmondson Junior College (615) 698-3885

3635 Brainerd Road
Chattanooga, TN 37411

Southern College of Seventh-Day Adventists (615) 238-2111

John Wagner, Ph.D., President
Collegedale, TN 37315

Tennessee Temple University (615) 698-6021

J. Don Jennings, Ph.D., President

Jonathan Henry, Ph.D., Acting Head
Department of Mathematics

1815 Union Avenue
Chattanooga, TN 37404

University of Tennessee, Chattanooga (615) 755-4141

Fredrick Obear, Ph.D., Chancellor

Ronald B. Cox, Ph.D., Dean
School of Engineering

James G. Ware, Ph.D., Head
Department of Mathematics

615 McCallie Avenue
Chattanooga, TN 37403

HOSPITALS

Allergy and Asthma Clinic of Chattanooga 721 Glenwood Drive Memorial Medical Center, West Chattanooga, TN 37404	(615) 698-5293
Centra Care Medical Centers 4490 Hixson Pike Hixson, TN 37343	(615) 875-0700
403 McBrien Road East Ridge, TN 37412	(615) 894-3589
T.C. Thompson Children's Hospital- Medical Center 910 Blackford Street Chattanooga, TN 37403	(615) 778-6011
Diagnostic Hospital 2412 McCallie Avenue Chattanooga, TN 37404	(615) 698-0221
Downtown General Hospital 709 Walnut Street Chattanooga, TN 37402	(615) 266-7721
Erlanger Medical Center Cancer and Tumor Clinic 975 East Third Street Chattanooga, TN 37403	(615) 778-7000 (615) 266-3029
Humana Hospital East Ridge 941 Spring Creek Road East Ridge, TN 37412	(615) 894-7870
Hutcheson Memorial Tri-County Hospital 100 Gross Crescent Ft. Oglethorpe, GA 30742	(615) 866-2121

Med-South, Inc. (615) 894-5861
4432 Highway 58
Chattanooga, TN 37416

Memorial Hospital (615) 629-8100
2500 Citico Avenue
Chattanooga, TN 37404

Metropolitan Hospital (615) 265-3303
511 McCallie Avenue
Chattanooga, TN 37404

Mountain View Center, Inc. (615) 861-4357
200 Mountain View
Ft. Oglethorpe, GA 30742

North Park Hospital (615) 870-1300
2051 Hamill Road
Hixson, TN 37343

Parkridge Hospital (615) 698-6061
2333 McCallie Avenue
Chattanooga, TN 37404

Red Bank Community Hospital (615) 870-2211
632 Morrison Springs Road
Red Bank, TN 37415

Sequatchie General Hospital (615) 267-2964
Dunlap, TN 37237

Shallowford Medical Center (615) 899-2121
7020 Shallowford Road at I-75
Chattanooga, TN 37421

Wildwood Sanitarium and Hospital (615) 820-1493
Exit 169, I-24
Wildwood, GA. 37419

LABORATORIES

Environmental Testing

Analytical Industrial Research Laboratory (615) 894-8101
153 Warehouse Mart
Chattanooga, TN 37416

Technical Laboratories, Inc. (615) 265-4533
515 Cherokee Boulevard
Chattanooga, TN 37405

Wastewater Operators and Consultants (615) 899-9301
153 Warehouse Mart
Chattanooga, TN 37405

Construction Testing

GEO Construction Testing, Inc. (615) 624-0967
2103 Linsley Place
Chattanooga, TN 37404

Industrial Laboratories, Inc. (615) 267-0274
600 East 10th Street
Chattanooga, TN 37408
901 Riverfront Parkway (615) 267-0825
Chattanooga, TN 37408

Infrared Research, Inc.
100 Park City Road
Ft. Oglethorpe, GA 30742

Inspection Service, Inc. (615) 870-8011
831 Ashland Terrace
Hixson, TN 37343

Mid-South Testing Laboratories, Inc. (615) 624-6707
3403 Lisa Drive
Chattanooga, TN 37404

Universal Testing Laboratories, Inc. (615) 265-6985
Commerce Union Bank Tower
Chattanooga, TN 37408

Medical Testing

Allied Laboratories (615) 756-0533
863 McCallie Avenue
Chattanooga, TN 37404

Andco Laboratory (615) 935-9829
107 South Maple Street
Ringgold, GA 30736

Hoover Laboratory (615) 866-6376
105 1/2 Chickamauga Avenue
Rossville, GA 30741

Plaza Clinical Laboratory (615) 778-3195
Erlanger Hospital
979 East Third Street
Chattanooga, TN 37403

Roche Biomedical Laboratories (615) 899-3521
6172 Airways Boulevard
Chattanooga, TN 37421

Vascular Diagnostic Services, Inc. (615) 756-1342
Whitehall Medical Center, Suite 308
960 East Third Street
Chattanooga, TN 37403

W.K.S. Pathology, Inc. (615) 622-9560
Parkridge Hospital
2333 McCallie Avenue
Chattanooga, TN 37404

CONSULTING ENGINEERS, PRIVATE COMPANIES

Environmental Engineering

Advanced Waste Management Systems, Inc. (615) 870-5212
Principal: Richard A. Ellis, Ph.D.
P.O. Box 100
Hixson, TN 37343
Principal: George J. Hyfantis, Jr., Ph.D., P.E. (615) 428-0849
134 Court Avenue, Suite 205
Sevierville, TN 37862

Campbell & Associates, Inc. (615) 267-9718
701 East 4th Street
Chattanooga, TN 37403

Davies Engineering, Inc. (615) 267-0874
505 Cherokee Boulevard
Chattanooga, TN 37405

Hensley-Schmidt, Inc. (615) 752-3663
817 Broad Street
Chattanooga, TN 37408

Architectural/Civil Engineering

Action Consultants, Inc. (615) 267-2222
208 Frazier Avenue
Chattanooga, TN 37405

Allen & Hoshall, Inc. (615) 877-5116
5928 Lake Resort Drive
Chattanooga, TN 37343

Basarrate & Associates (615) 629-9877
1110 McCallie Avenue
Chattanooga, TN 37404

Bell Engineering (615) 266-1252
414 Spring Street
Chattanooga, TN 37405

Bennett & Pless, Inc. (615) 756-7943
930 McCallie Avenue
Chattanooga, TN 37404

Cook & Spencer Consultants, Inc. (615) 899-4379
5813 Lee Highway
Chattanooga, TN 37421

Franklin Design Group, Inc. (615) 267-7681
615 Lindsay Street
Chattanooga, TN 37402

Gill Harrison & Associates, Inc. (615) 622-1124
1092 Chamberlain Avenue
Chattanooga, TN 37406

March Adams & Associates (615) 698-6675
3315 North Hawthorne Street
Chattanooga, TN 37406

Miller-McCoy, Inc. (615) 894-2244
5805 Lee Highway
Chattanooga, TN 37421

PDS Engineers & Constructors, Inc. (615) 894-0987
117 Nowlin Lane
Chattanooga, TN 37421

Watt & Estes Inc. (615) 842-3335
4926 Adams Road
Hixson, TN 37343

Whitfield Engineering Co. (615) 866-5855
609 Schmitt Road
Rossville, GA 30741

Chemical/Industrial Engineering

Garner & Associates (615) 899-3857
6050 Lee Highway
Chattanooga, TN 37421

Marlboro Enterprises, Inc. (615) 886-5583
634 Mississippi Avenue
Signal Mountain, TN 37377

Sartain Associates (615) 476-9161
Wedgewood Office Park
4385 North Ocoee
Cleveland, TN 37311

Mechanical Engineering

Mech-Elect Services, Inc. (615) 264-9266
701 East 4th Street
Chattanooga, TN 37403

Mechanical Associates, Inc. (615) 624-2204
201 Tinsley Place
Chattanooga, TN 37408

CONSULTING ENGINEERS AND SCIENTISTS, INDEPENDENT

Natural Sciences	Specialization
Biology--	
Benson, Bernard W. 614 Texas Avenue Signal Mountain, TN 37377 (615) 886-3090	Botany
Litchford, Robert G. Route 4, Box 97B Chickamauga, GA 30707 (404) 398-3278	Parasite Physiology
Chemistry--	
Pitkin, Jack L. 821 Sutton Drive Chattanooga, TN 37343	Organic Chemistry
Trotter, Julian T. Route 4, Box 423B, Bethel Road Hartselle, AL 35640 (205) 773-8767	Environmental Chemistry
Physical Sciences	
Kinkel, Bryan P.O. Box 108 Alvaton, KY 42122	Meteorology

Engineering

Environmental Engineering-- Gay, Robert L., Ph.D. 4423 SW Hamilton Terrace Portland, OR 97201 (503) 223-4150	Air Quality Impact Studies Health Effects Assessment
Civil Engineering-- Lutin, Phillip 7201 Jarnigan Road Chattanooga, TN 37421 (615) 892-3111	
Mechanical Engineering-- Rhoden, Grady L.* P.O. Box 8503 Chattanooga, TN 37411 (615) 622-1180	

CONSULTING ENGINEERS AND SCIENTISTS
UNIVERSITY OF TENNESSEE, CHATTANOOGA 37403

Geosciences	Specialization
Bergenback, Richard E. Department of Geosciences (615) 755-4423	Geology; Petrology
Churnet, Habte G. Department of Geosciences (615) 755-4605	Minerology; Geochemistry
Perfetti, Patricia A. Department of Geosciences	Botany
Wilson, Robert L. Department of Geosciences	Geography; Hydrology

Computer Science

Anderson, David L. Center of Excellence for Computer Applications (615) 344-2375	CECA Project Administration
Day, Bernard C. Department of Computer Science	Systems Analysis & Design

*Denotes registration as a Professional Engineer (P.E.)

Lewis, Elise R. Department of Computer Science	Systems Programming
Smith, Janet C. Department of Computer Science	Statistical Analysis; Research Design
Smith, Jerry D. Department of Computer Science	Database Management Systems
Smullen, Stephanie A. Department of Computer Science (615) 755-4395	Graphics Applications; Database Management Systems

Engineering

Chemical Engineering-- Clifford, Wayne H. School of Engineering (615) 755-4121	Process Simulation; Computer Applications
Cunningham, James R.* School of Engineering (615) 755-4121	Unit Operations; Pollution Controls; Computer Applications
Henry, James M.* School of Engineering (615) 755-4121	Pollution Controls; Energy Management; Computer Applications
Civil Engineering-- Foster, Edwin P.* School of Engineering (615) 755-4121	Finite Element Analysis; Structural Analysis

*Denotes registration as a Professional Engineer (P.E.)

Wynn, Robert H.* School of Engineering (615) 755-4121	Fluid Mechanics; Structural Dynamics; Computer Applications
Electrical Engineering-- Carney, Terrance M.* School of Engineering (615) 755-4121	Control Systems; Power Systems; Computer Applications
Eltom, Ahmed Hassan School of Engineering (615) 755-4381	Power Systems
Jones, Byron M. School of Engineering (615) 755-4121	Power Systems
Parten, Clifford R. School of Engineering (615) 755-4121	Control Systems; Network Analysis;
Sendaula, Henry M. School of Engineering (615) 755-4355	Communications Control Systems Microprocessor Applications
Thomason, Virgil A.* School of Engineering (615) 755-4373	Microprocessor Applications; Network Analysis
Todd, Donald E. School of Engineering (615) 755-4339	Electro-magnetics; Network Analysis; Computer Architecture

*Denotes registration as a Professional Engineer (P.E.)

Industrial Engineering/Engineering Management--

Baker, Merl School of Engineering (615) 755-4015	Resource Allocation; Project Planning
Evans, Jan M. School of Engineering (615) 755-4121	Manufacturing Systems; Project Management; Quality Control
Hailey, Max L.* School of Engineering (615) 755-4121	Numerical Analysis; Project Management; Inventory Control
McMahon, Edward H. School of Engineering (615) 755-4771	Engineering Economy; Value Engineering; Process Development

Mechanical Engineering--

Cassell, Don S. School of Engineering (615) 755-4121	Thermal Sciences; Nuclear Power Systems
Damshala, Prakash R.* School of Engineering (615) 755-4390	Thermal Sciences; Solar Energy Systems
Gurley, William Q.* School of Engineering (615) 755-4366	Mechanics; Dynamics
Hiestand, James W.* School of Engineering (615) 755-4038	Thermal Sciences; Computer Applications

*Denotes registration as a Professional Engineer (P.E.)

Jones, Michael H.* School of Engineering (615) 755-4369	Thermal Sciences; Fluid Mechanics
Knight, Charles* School of Engineering (615) 755-4392	Thermal Sciences; Computer Applications; Pollution Controls
McDonald, Gary H. School of Engineering (615) 755-4483	Thermal Sciences; Mechanics; Numerical Analysis
Schonblom, J. Eric* School of Engineering (615) 755-4309	Thermal Sciences; Statistical Analysis; Energy Management

*Denotes registration as a Professional Engineer (P.E.)

APPENDIX D

DOCUMENTATION OF THE INVENTORY FILE QUESTIONNAIRE

The Inventory File system utilizes four files. Three files, SET, TYPE, and COMMENT, are used by the Inventory Questionnaire. The fourth file, QASTAT, is used by the QA agent to store data quality and data status information. This appendix contains a copy of the documentation which accompanied the Inventory Questionnaire Program that was sent to EMTS participants. In addition, tables have been included which show the data structures of the four files. This information is presented so that prospective EMTS users can see what kind of information is available from the Inventory File.

EMTS INVENTORY QUESTIONNAIRE

This Instruction Document should be used as a guide for Version 2.0 of the EMTS questionnaire program. Version 2.0 is the final questionnaire program that will be issued. The purpose of this questionnaire is to inventory the types of data your agency holds. The questions asked do not pertain to the data points given within data sets but to information such as Heading, Abstract, Time and Place of the study, and general contents.

Answer the questions to the best of your ability, and please take the time to research an answer before leaving it blank. Also use the comment fields provided to explain an answer further or tc explain possibly why you cannot provide an answer.

This questionnaire will be very helpful in querying the type of data sets that are available for the EMTS. That is its major purpose. If it appears from your answers that a data set can be used for the EMTS Data Base, a copy of that data set will then be requested from your organization.

This document is essentially a hardcopy of Version 2.0. It should help you get through the program with ease. If you still have questions on how to enter your data, please do not hesitate to call the Environmental Research Center.

Some general pointers about answering this questionnaire:

i. When you are entering information into a record, use the direction arrows to move the cursor to the desired position. If you press return or PgDn in this version, you will move on to the next field.

ii. If one data set contains many files that go by different names or contains many different aspects of data, you can enter the data in two ways, as follows:

   (1) Follow the most general scheme of information that pertains to the entire data set and enter the data set under one reference number. In addition, supplement your entries with a hardcopy of all the filenames that are contained within the data set.

   (2) Separate the data set into one reference number for each file. Use one reference number with a letter following it (example: 041A, 041B, 041C etc.). This option should be used only if the files contain data that is so different that no general topic could be used.

****

FIELD DESCRIPTIONS

Note: The words in parenthesis are the actual field names in the Inventory Database.

COLOR (Response)	Do you have a color monitor? Answer this question with Y(yes) or N(no). The display screens will be multi-colored or monochrome according to your system and answer.

How can this data set be identified ?

AGENCY CODE (Source_id)	The first numbers of the reference number identifying you, the EMTS participant who provides information for this Inventory File. Designated codes are as follows:

Participants gathering data.

01 Chattanooga-Hamilton County Air Pollution Control Board
02 Environmental Monitoring Systems Laboratory-Las Vegas
03 Environmental Monitoring Systems Laboratory-Research Triangle Park
04 Environmental Research Center (Las Vegas)
05 EPA Office of Toxic Sustances (Washington D.C.)
06 Lockheed Engineering and Management Services Co. (Las Vegas)
07 Northrop Services, Inc. (Research Triangle Park)
08 Region 4 (EPA, Atlanta, GA)
09 Tennessee Department of Health and Environment (Nashville)
10 Tennessee Valley Authority (Chattanooga)

REFERENCE NO. (Ref_No)	Reference number - A combination of the agency code and up to four digits, assigned by the EMTS participant above as a unique number for each entry in the Inventory File. Each data set described must have a reference number assigned. A listing of the Reference numbers used will appear before each new entry.
TITLE (Title)	Title or header of the report, document, map, or data set being described, if such a title exists.

ABSTRACT (Describ)	The abstract is a short description of the data set contents.
DOCUMENT NO. (Doc_No)	Document Number identifying the report, document, or data set. This refers to any alphanumeric code assigned by publishers, agencies, NTIS, libraries, etc. (such as appears on the cover of most government documents). The DOC_NO may or may not exist. It should not be confused with the REF_NO which is a mandatory entry field and unique to the EMTS Inventory File.

What kinds of data are available ?

For purposes of the EMTS Data Inventory File, data have been divided into two major categories: Geographic and Environmental. Within each major category is a list of Primary Data Elements or SUBJECTS. Associated with each Subject is a list of Secondary Data Elements or ATTRIBUTES. Together these two categories will describe the type of data that is contained within the data sets you will enter into the Inventory File.

Fields 1 through 11 represent the 11 catagories of Geographic Data. Fields 12 through 16 represent the 5 catagories of Environmental Quality data.

You are asked to identify what kind of data you have by choosing a SUBJECT and the associated ATTRIBUTES that correlate to the selected Subject. These categories are basic; if the subject of your data source does not fit into one of these defined areas, you are asked to enter number 17, "other," and to record your Subject in the space provided on the comment screen.

Examples of the types of Attribute Data expected to be associated with the individual Subjects are listed following each Subject. As with the Subject listing, if you have attribute data that is not listed, mark "other" and proceed to enter the information pertaining to your attribute data on the comment screen that will appear when "other" is entered. The field name for the "other" comment is (Dcom).

Note: The listing of attributes below will appear as they do on the actual screens. Also, the subject numbers entered will be stored under the field name (Subject), and the attributes marked will be stored under the field name (Attribute).

****

GEOGRAPHICAL DATA

1. NATURAL RESOURCES

Soils	Land use/land cover
Geology	Natural Features
Topography	(Mountain peaks, etc.)
Vegetation	Mineral Dposits

Other (mark to enter a comment)

---

2. HYDROGRAPHY

USGS Cataloging units	Seeps and springs
Groundwater basins	USGS Surface water gauging stations
Flood hazard boundaries	USGS Water quality stations
Aquifer information	SWS Stream gauging stations
USEPA Hydrologic reach	SWS Instream sediment monitoring stations
River milage	SWS Lake and reservior sedimentation survey sites
Stream order	SWS Dam safety survey sites
Stream situation/stage	SWS Surface water intakes
Stream condition/flow	SWS Water quality stations
Stream periodicity	Drinking water source
Public waterways	Water routing to consumers
Navigability	Well water locations
Channelization	SWS Sanitary discharge points
River locks	USGS Watstore/USEPA Storet
Commercial boat docks	USGS Observation wells
Climate/meteorology record stations	
Stream elevations	

Other (mark tc enter a comment)

---

3. METEOROLOGY AND CLIMATOLOGY

Temperature	Precipitation
Insolation	Wind
Pressure	Monitoring sites
Relative humidity - dew point	Climatic regions

Other (mark to enter a comment)

---

4. POLITICAL AND ADMINISTRATIVE UNITS

State reserves	Surveyed township, range, & section
State natural areas	Senatorial districts
Federal reserves	Congressional districts
Forest districts	Water districts
Parks	

Local administrative districts	Sanitation districts
Land status/land ownership	Gas company districts
	Electric company districts
	Irrigation districts

Other (mark to enter a comment)

---

5. INFRASTRUCTURE AND CULTURAL DATA

Highways	Airports
Roads	Schools
Railroads	Churches
Transmission lines	Cemetaries
Pipelines	Hospitals
Bridges	Shopping centers
Trails	Private residence
Windmills	Commercial availability
Watertanks	Industrial sites
	Sanitary landfills

Other (mark to enter a comment)

---

6. DEMOGRAPHY

States	Population
Counties	Sex/Age
Minor civil divisions	Race
Urbanized area/places	Employment
Incorporated places	Occupation
Census designated places	Education
Zip code areas	Income
Census tracts	Home market value
Enumeration districts	Commuting patterns
Block numbering areas	Dietary characteristics
Block groups	Confidential information
Blocks	
Households	

Other (mark to enter a comment)

---

7. HEALTH

Complaints	Birth statistics
Cancer data	Neonatal statistics
Respiratory data	Mortality/morbidity rates
Allergy data	

Other (mark to enter a comment)

---

8. AGRICULTURE DATA

Crop type and yield
Management practices
Animal productivity
Crop storage, distribution, & handling
Prime agricultural land

Other (mark to enter a comment)

---

9. INDUSTRIAL AND COMMERCIAL DATA

Municipal products
Municipal treatments
Industrial products
Industrial treatments
RCRA facilities
NPDES permit sites
Hazardous waste sites (e.g., ranked superfund sites)
Abandoned waste sites
Solvents and fuel use or storage
Waste assays
Oil & Gas wells
Mines
Complaints

Other (mark to enter a comment)

---

10. SPECIAL BIOLOGICAL DATA

Wildlife distributions
Endangered species data
Wetlands
Critical habitats

Other (mark to enter a comment)

---

11. SPECIAL PHYSICAL FEATURES

Sinkholes
Faults
Epicenter data
Caves
Seismic & Drill holes

Other (mark to enter a comment)

****

ENVIRONMENTAL DATA

12. AIR

SAMPLING SOURCE	MEASURED PARAMETERS
Emissions data	NAAQS criteria pollutants
Area source emission	(O3, CO, NOx, SOx, TNMC,
Emission rates/fuel group	TSP, Pb)
Indoor air	Bioaerosols
Ambient air	Associated meteorology
Point source	VOC
Mobile source	Toxic
Industrial	Solvents
& Municipal waste	Solid waste
Radiological data	Trace metals
Complaints	Miscellaneous waste
	Noise pollution

Other (mark to enter a comment)

---

13. WATER

SAMPLING SOURCE	MEASURED PARAMETERS
Biota	Criteria pollutants
Tissue bioaccumulation	Superfund
NPEDES permits	RCRA required measurements
Surface water	Metals
Groundwater	Pesticides
Wells	Other organics
Drinking water	Inorganics
Irrigation	Background data (temp, pH)
Sediments	Bioassays

Other (mark to enter a comment)

---

14. SOILS

SAMPLING SOURCE	MEASURED PARAMETERS
Biological	Physical properties
Assays	(particle size,
Soil cores	CEC, pH, porosity)
Column studies	Metals
Model simulations	Pesticides
Radiological data	Organics
	Inorganics
	Bacteriological data
	Background (temp, RH evap)

Other (mark to enter a comment)

---

15. FOOD

SAMPLING SOURCE	MEASURED PARAMETERS
Duplicate diet	Pesticide residues
Constructed diet	Dietary information
Market basket	
Radiological data	
Complaints	

Other (mark to enter a comment)

---

16. BIOLOGICAL DATA

SAMPLING SOURCE	MEASURED PARAMETERS
Blood	Pesticides
Breath	Volatiles
Urine	Metals
Adipose tissue	

Other (mark to enter a comment)

---

17. OTHER

(Subcom) NEW SUBJECT SUGGESTION: _____

(Subacc) ENTER ANY ATTRIBUTES OR COMMENTS THAT ACCOMPANY THIS SUBJECT. _____

---

18. ENTERING (18) WILL RETURN YOU TO THE MAIN MENU.

****

After you have selected a Subject and have marked all of the associated attributes, you will move on to the Detail Questions. The answers to these questions should provide information about the principal investigators, time and place of the study, and computer equipment involved in the storage of the data, etc.

If one data set covers several topics such as Hydrography, Water, Demography, and Infrastructure, enter "2" (Hydrography) and mark all the associated attributes. When you arrive at the Detail section, answer all the questions pertinent to the Subject matter. If it occurs that the four subjects to be entered are all described by the same details, then answer the detail questions only once for that Reference number (data set). When you are through entering the details, you will return to the Subject listing. Enter the next Subject "13" (Water). Proceed to mark all the associated attributes. This time when you arrive at the Detail section, enter "E" to exit back to the Subject listing. Repeat this process for as many subjects as there are pertaining to this data set. Of course, if details are different for a particular subject, please answer the pertinent questions as many times as necessary. The detail questions are as follows:

On what system is this data stored, and how can it be accessed?

STORAGE (Storage)	Storage medium on which a copy of the data can be obtained (e.g., magnetic tape, diskette, hardcopy).
COMPUTER (Computer)	The name and model of the computer on which the data set resides.
LANGUAGE (Format)	In which computer language is the data stored (e.g., ELAS, Standard USGS, ASCII).
SYSTEM (System)	The name of the data management system on which the data set resides. (e.g. ADABAS, ARC/INFO, dBASEIII).
FILENAME (Filename)	The name of the file used to access the data set. Maintain proper syntax required by the system on which the data set resides. This information may be useful if only certain files within a complete data set are requested for the EMTS data base.

CUSTODIAN (Custodian)	The name of the person or organization who operates the computer on which the data set resides. This person is probably not the same person as the Contact for more information about the data set but may work in conjunction with the contact person.
MODEM PHONE (Modem_No)	A telephone number of the computer call-in modem for possible access to data or any other software that may be used during the EMTS Project.
OPERATORS NO. (Phone_cus)	Phone number of the Custodian or computer operator for the system on which data set resides.
FTS LINE (FTS_Cus)	FTS telephone number of computer operator on which data set resides.
COST (Money)	Cost estimate if it is necessary to obtain a copy of the data set.

Who produced the data or can give information about it ?

CONTACT (Contact)	Name of the person who can be contacted for more information about the data set. This is either the person who generated the data or who is most familiar with the data.
AGENCY (Agency)	Name of the agency or affiliation of the Contact.
BRANCH (Branch)	Name of the administrative unit required to insure mail delivery to the Contact.
ADDRESS (Address1)	Street address of Contact - number and name of street.
CITY (City)	Name of city for Contact's mailing address.
STATE (State)	Two character code of state for Contact's mailing address.
ZIP (Zip)	ZIP Code for Contact's mailing address.
PHONE NUMBER (Phone_Com)	Commercial phone number for Contact: area code, prefix, and four-digit number.

FTS PHONE NO. (Phone_FTS)	FTS (Federal Telecommunication System) phone number for Contact: FTS prefix and four-digit number.

What do you know about the data?

STARTING DATE (Start_Date)	Date of the first datum in the data set: mm-dd-yy.
ENDING DATE (End_Date)	Date of the last datum in the data set: mm-dd-yy

If you do not know the start and end dates or if the dates are different for the same data set, leave the dates blank and make a comment about the situation in the space provided.

FREQUENCY (Frequency)	Number of measurements or samples per unit time typical for the data set (e.g., 2 per week; 1 per hour). Enter a number only; the time units go in the next field.
TIME UNITS (Timeunit)	Mark the correct units of time for frequency of sampling or measurement. Time unit codes are given below.

Time units

Decade	Day
Year	Hour
Month	Minute
Week	Second

DATE COMMENT (Datecomm)	A comment field allowing you to comment on the variation in dates or times connected with the data set you are presently working on.
GAPS (Gaps)	The number of times in the data set where sampling or measurements were discontinued and then were resumed at a later date.
REVISION DATE (Revision)	Date of the last revision or update of the data set: mm-dd-yy.
RECORDS (Records)	The total number of records in the file or data set that correlates to the Reference number you are presently working on.

If you are working with a tabular data set, and if spatial information is not associated with it in any way, then answer (No) to the question below and continue on.

If spatial information is associated with the data but your agency does not possess it, answer (Yes) to the question below and indicate who has the information in the ancillary data section.

MAP (Map)	Does a map accompany your data set, or are your data represented in mapped form? Y or N
SCALE (Scale)	Scale of map, if applicable (e.g., 1:24,000; 1:62,500; 1:250,000).
RESOLUTION (Resolution)	The minimum mapping/scanning resolution. The smallest unit distinguished or represented on the data (e.g., 1/10 acre, 1 meter).
PROJECTION (Projectiion)	Projection of map, if applicable (e.g., Transverse Mercator), and Plane Coordinate System (e.g., Universal Transverse Mercator, State Plane).
MAP FEATURES (Feature)	Map features: Vector - polygons,lines, or points; or Rastor - grid cell data.

Ancillary data consists of any complimentary data that is associated with the data set you are working on. This data could be Quality Control/Quality Assurance information, Abstracts, Journals, etc. If your agency does not possess this type of data but can give information as to its whereabouts, please do so.

ANCILLARY DATA (Ancillary)	What type of data may be available to complement this data set.
CONTACT (An_Contact)	Name of person to contact to acquire the ancillary data.
AGENCY (An_Agency)	Agency for the ancillary contact.
BRANCH (An_Bran)	Branch for the ancillary contact.
DIVISION (An_Div)	The branch division for the ancillary contact.

ADDRESS (An_Add) — Enter the Street address, city, state, and zip for the ancillary contact in the appropriate spaces.

CITY (An_City),	STATE (An_St),	ZIP (An_Zip)

Where was the study done?

In the following set of questions, please explain to the best of your knowledge where the data contained within the data set was collected or to what areas it pertains. If this data set is a part of a nationwide study but includes the City of Chattanooga or the State of Tennesee, mark those areas that are pertinent.

STUDY AREA (Geounit) — The geographical unit in which the data in the data set is represented (the extent of the study area boundary). Expected areas are listed below:

State	Enumeration districts
SMSA	Block number areas
County	Block groups
7.5 minute quads	Blocks
Urbanized area	Zip code areas
Census Designated places	Households
	Point locations
Incorporated places	Reach segment
Unincorporated places	Hydrological units, (e.g., Watershed)
Census tracts	

AREA COMMENT (Study_Area) — A character field allowing you to explain any special circumstances surrounding the study area boundary.

QUADRANGLES (Quad_No) — Quadrangle number - The basic geographical unit for the EMTS data base is the 7.5 minute USGS topographic quadrangle. There are 54 quadrangles which cover the Chattanooga Standard Metropolitan Statistical Area. All data sets to be used in the EMTS data base must be referenced to the geographical area covered by that data set in terms of quadrangles. A map representing the EMTS Study Area is enclosed. A list of the 54 quadrangles is given on the following page. Numbers 55, 56, and 57 are combinations of coverages that are possible.

Quadrangles represented in the EMTS (SMSA).

1	Curtistown	19	Ketner Gap	37	East Ridge
2	Smartt Mtn	20	Fairmount	38	Ringgold
3	Collins	21	Daisy	39	Cohutta
4	Savage Point	22	Snow Hill	40	Trenton
5	Mt Airy	23	South Cleveland	41	Durham
6	Brayton	24	Orme	42	Kensington
7	Graysville	25	South Pittsburg	43	Nickajack Gap
8	Big Spring	26	Sequatchie	44	Tunnel Hill
9	Tracy City	27	Wauhatchie	45	Sulphur Springs
10	Palmer	28	Chattanooga		
11	Daus	29	East Chattanooga	46	Cedar Grove
12	Henson Gap	30	Ooltewah	47	Estelle
13	Soddy	31	McDonald	48	Catlett
14	Grasshopper Creek	32	Doran Cove	49	Villanow
15	Birchwood	33	Bridgeport	50	Valley Head
16	Monteagle	34	New Home	51	Dougherty Gap
17	White City	35	Hooker	52	Trion
18	Whitwell	36	Fort Oglethorpe	53	Subligna
				54	Sugar Valley

55 Map Quadrangles 1 through 32 are in Tennessee
56 Map Quadrangles 33 through 38 are in Tennessee and Georgia
57 Map Quadrangles 39 through 54 are in Georgia

COUNTY (County) — County number - There are six counties in the Chattanooga SMSA. Data sets can be referenced to their geographical coverage by county. A list of the six counties and codes are given in the table below:

County Codes

1	Sequatchie	4	Dade
2	Marion	5	Catoosa
3	Hamilton	6	Walker

STATE (State_in) — The Chattanooga SMSA falls into two states, Tennessee and Georgia. Data sets can be referenced by the states covered by the data.

1 Tennessee
2 Georgia

In what capacity is this data used?

USER (User) — Which agency makes use of the data your agency holds?

USE (Use) — What do the current users use the data for?

IMPORTANCE (How_Often) — How often is the data requested or used?

****

Once you have entered a data set into the data base, you now have the option to return to the Subject Section and to enter another subject for the data set you are presently working with, or you can return to the Main Menu and can ADD a new data set to the inventory.

NOTE: If you have several subjects pertaining to the same reference number or data set, please complete your entries while you are working with that particular reference number. If the case arises whereby you wish to make an addition to a reference number previously entered, choose the ADD option from the Main Menu and enter the same reference number but with the addition of an {A}. For example, the reference number given previously was (041). To make an addendum to that data set, enter (041A). This number will be recognized as an addendum and will be treated as such in the Master Inventory File.

Once a data set is entered into the database, you may choose the SELECT option from the Main Menu. This option will allow you to select a reference number that was entered previously and to perform the following:

1. Review and change the information you have entered (right justify your reference number entry).

2. Delete the data set from the inventory.

3. Print a short summary of the information entered.

When you are through entering information, return to the Main Menu and choose the QUIT option. This will return you to the DOS > prompt.

* *

The following tables describe the data structure of the EMTS Inventory File system:

TABLE D1. Structure for data base: SET.DBF

Field	Field Name	Type	Width
1	SOURCE_ID	Character	2
2	REF_NO	Character	4
3	TITLE	Character	75
4	DOC_NO	Character	20
5	DESCRIB	Character	240
6	DATE_RD	Date	8
7	STATUS	Character	10
Total			362

TABLE D2. Structure for database: TYPE.DBF

Field	Field Name	Type	Width	Field	Field Name	Type	Width
1	REF_NO	Character	6	31	TIMEUNIT	Character	8
2	SUBJECT	Character	2	32	GAPS	Numeric	4
3	ATTRIBUTES	Character	35	33	DATECOMM	Character	75
4	DCOM	Character	240	34	LAST_ENTRY	Date	8
5	SUBCOM	Character	50	35	REVISION	Character	30
6	SUBACC	Character	160	36	RECORDS	Numeric	6
7	STORAGE	Character	15	37	MAP	Character	1
8	COMPUTER	Character	20	38	SCALE	Character	20
9	FORMAT	Character	20	39	RESOLUTION	Character	15
10	SYSTEM	Character	20	40	PROJECTION	Character	35
11	FILENAME	Character	20	41	FEATURE	Character	20
12	CUSTODIAN	Character	30	42	ANCILLARY	Character	25
13	MODEM_NO	Character	13	43	AN_CONTACT	Character	30
14	PHONE_CUS	Character	13	44	AN_AGENCY	Character	50
15	FTS_CUS	Character	15	45	AN_BRAN	Character	30
16	MONEY	Character	50	46	AN_DIV	Character	20
17	CONTACT	Character	30	47	AN_ADD	Character	40
18	AGENCY	Character	50	48	AN_CITY	Character	15
19	BRANCH	Character	30	49	AN_ST	Character	2
20	DIVISION	Character	20	50	AN_ZIP	Character	10
21	ADDRESS1	Character	45	51	GEOUNIT	Character	20
22	CITY	Character	15	52	QUAD_NO	Character	65
23	STATE	Character	2	53	COUNTY	Character	7
24	ZIP	Character	10	54	STATE_IN	Character	2
25	MAILSTOP	Character	5	55	STUDY_AREA	Character	160
26	PHONE_COM	Character	13	56	USER	Character	30
27	PHONE_FTS	Character	15	57	USE	Character	50
28	START_DATE	Date	8	58	USE2	Character	50
29	END_DATE	Date	8	59	HOW_OFTEN	Character	25
30	FREQUENCY	Character	1				
				** Total **			1815

TABLE D3. Structure for data base: COMMENT.DBF

Field	Field Name	Type	Width
1	REF_NO	Character	6
2	SUB_NO	Character	2
3	WORDS	Character	254
** Total **			263

TABLE D4. Structure for data base: QASTAT.DBF

Field	Field Name	Type	Width
1	SOURCE_ID	Character	2
2	REF_NO	Character	4
3	DATE_RECD	Date	8
4	QA_COMPLT	Date	8
5	STATUS	Character	250
6	COMMENT	Character	100
** Total **			373

APPENDIX E

STATUS OF THE EMTS DATA BASE

The following listing was derived from the Inventory File on March 1, 1987. The listed items are the reference number/agency code, the status code, the title of the data set, and the abstract which briefly describes the data set. Prospective EMTS users should ask for the most recent listing if they plan to use data within the EMTS data base. Once on the mailing list, EMTS users and participants will periodically receive updated summaries of the EMTS data inventory.

The EMTS Data Set Inventory File can be queried easily through the use of the EMTS Query Program. EMTS users and participants will receive a copy of the Inventory Master File and the Query Program on diskettes. The Query Program allows users to review all of the information that is stored in the four files of the inventory system and to print reports by using their own personal computers.

ID	NO.	STATUS	TITLE	DATA SET DESCRIPTION
01	1	L46E	Hamilton County Point Source Data Set (TN)	This data set contains technical process information for emission classification and point source emissions data used for modeling dispersion and assuring ordinance compliance.
01	2	EP4E	Hamilton County Ambient Air Quality Data Set (TN)	This data set contains emissions data used for odor control purposes, hazardous waste site cleanup (monitoring), and to detect point source ordinance violations.
01	3	EP4E7	Piney Woods Voc and Air Toxics Study	Data is used to monitor air quality and industrial sites, in the Piney Woods area, and is cataloged data for future reference
01	4	EP4E	Hamilton County Area Source Emissions Inventory	Data contains information for open burning policies and for pollutant attainment analysis.
01	5	1	Human Population Exposures to Coke-ovens Atmospheric Emissions	Data contains general reference materials only.
01	6	1	Chat.School Children Study:Effects of Community Exposure to NO 2	Data (published literature) used for general reference material.
01	7	EPA	Tennessee-American Water Company Water Distribution System, General Index	This data set contains 5 general index maps of the principal water distribution system for Hamilton County, Tennessee, with elevation details and a full layout of the water treatment plant are included.
01	8	E55A	Tennessee-American Water Company Water Distribution System, Details	This data set is an extension of its index data set (017). It details the whole distribution system including the branches that feed other independent utility companies.
01	9	E4A	Geologic Map of Northwest Georgia	Data set consist of one map of the existing geologic formations in Catoosa, Dade, and Walker Co. Included are cross and columnar-sectional views of the formations.
01	10	E4A	Geologic Map of Georgia	This data set is an expanded version of data set #019 in that it covers the entire State of Georgia.

01	11	E4A	Slope Map of Georgia	This data set contains one map depicting the slope characteristics of the entire State of Georgia.
01	12	E4A	Mineral Resources Map of Georgia	This data set details the statewide mineral resources of Georgia.
01	13	ES54	Hydrologic Evaluation for Underground Injection Control in North Georgia	This data set contains 18 plates of geologic and hydrologic data for Dade, Walker, and Catoosa Counties in Georgia.
01	14	E4A	Coal Deposits on Sand and Lookout Mountains, Dade, and Walker Counties, GA.	This data set details the resident coal reserves on Sand and Lookout Mountains, and core sample analysis data is also provided.
01	15	E4A	Quality of Coal Resources Underlying Sand and Lookout Mountains, Georgia...	This data set gives in-depth analyses of core samples taken from the above areas, and this data is as current as 1979.
01	16	E4A	Analyses of Coal from Northwest Georgia	This data set contains core sample location maps and a detailed table of all the chemical analyses obtained during this study.
01	17	E4A	Petroleum Exploration Wells in Georgia	This data set contains a map and some descriptive information on petroleum test wells in North Georgia.
01	18	E4A	Ceramic and Structural Clays and Shales of Catoosa County, Georgia	This data set contains a map and descriptive information about the geologic formations within Catoosa County, Georgia.
01	19	E4A	Ceramic and Structural Clays and Shales of Dade County, Georgia	The contents of this data sets are practically identical to those of data set #0118 with the exception of the number of geologic samples taken and, of course, the quadrangles involved in the study.
01	20	ESD5a	Contributions to the Paleontology of Northwest Georgia	This data set contains a map and descriptive information on the paleontology of the North Georgia Counties within EMT5.
01	21	ESD5a	Geology and Mineral Resources of the Paleozoic Area of Northwest Georgia	This data set contains a map of Northwest Georgia and descriptive information concerning chemical analyses of the paleozoic and geologic formations of the region.
01	22	ED5A	Geology and Mineral Resources of the Northwest Quarter of Cohutta Quad.	This data set details the geology and mineral resources of the Cohutta Quadrangle.

01	23	ESD5A	Zonation of the Middle and Upper Ordovician Strata in Northwest Georgia	This data set contains fossil formation maps and related data for North Georgia.
01	24	ESD5A	Geology and Mineral Resources of the Dalton Quadrangle, Georgia-Tennessee	This data set contains detailed geologic and topographic data. The name of the data set is misleading as there are no 7.5-minute quadrangles by that name in the EMTS study area, however, the coverage includes the Cohutta quadrangle.
01	25	ESD5A	Streamflow Maps of Georgia's Major Rivers	This data set gives very general information on the flow patterns of the major rivers in Georgia. This data set may not be of much value to EMTS as there is very little emphasis on Northwest Georgia.
01	26	ESD5A	Geology and Groundwater Resources of Catoosa County, Georgia	This data set contains maps and descriptive information about water resources from around 1956-9. This data set was published in 1963.
01	27	ED5A	Geology and Groundwater Resources of Walker County, Georgia	This contents of this data set are analogous to those of data set 0126.
01	28	ED5A	Water Use in Georgia by County for 1980	This data set gives "census-like" data on statewide and county-by-county statistics on industrial, commercial, residential, and agricultural water distribution. This data set was published in 1982.
01	29	ESD5A	Availability of Water Supplies in Northwest Georgia	This data set contains highly detailed tables, charts, and maps on water quality, flow, and general availability. This data set was published in 1976.
01	30	ED5A	Quality and Availability of Groundwater in Georgia	This data set is similar to data set 0129. It was published in 1978.
01	31	ED5A	Water Use in Georgia for 1980 - A Preliminary Report	This data set is a much more general version of data set 0128. It may not be of much use in the GIS database.
01	32	ED5A	Monitoring Well Construction for Hazardous Waste Sites in Georgia	This data set gives general specifications for installing monitoring wells at hazardous waste sites in each of the geologic regions of Georgia.
01	33	ED5A	The Characteristics of Georgia's Water Resources and Use/Control Factors	This data set contains qualitative information on the stream characteristics of the geologic regions of Georgia.

01	34	ED5A	Annotated Bibliography of Georgia Geology, 1965-1970	This data set is a bibliography of geologic studies performed between 1965 and 1970.
01	35	ED5A	Annotated Bibliography of Georgia Geology, 1971-1979	This data set is a bibliography of geologic studies performed between 1971 and 1979.
01	36	ED5A	Bibliography and Index of Georgia Geology, 1980-1982	This data set is a bibliography of geologic studies performed from 1980 to 1982.
01	37	ED5A	Flood Hazard Literature - Annotated Selections for Georgia	This data set is a classified bibliography of all types of flood hazard publications.
01	38	ED5A	Geologic and Mineral Resource Map Index of Georgia	This data set is a regionally classified bibliography of geologic and mineral resource maps for the State of Georgia.
01	39	ED5A	Daisy-Soddy-Falling Water Utility District Water Distribution System	This data set contains one layout of the above water distribution system in Hamilton County, Tennessee.
01	40	ES5A	Sale Creek Utility District Water Distribution System, General Index	This data set contains a single blueprint of the Sale Creek Utility District with general water routing information.
01	41	ES5A	Sale Creek Utility District Water Distribution System, Details	This data set contains three (3) detailed blueprints of the system described by data set 0140.
01	42	ES5A	Hixson Utility District Water Distribution System, General Index	This data set contains one blueprint of the water distribution system belonging to the Hixson Utility District.
01	43	ES5A	Detailed Flood Studies in Georgia: Index Map, 1982	This data set contains one double-sided map depicting general flood hazard areas in North and South Georgia. Also noted on the map legend is information for acquiring specific, detailed flood hazard reports.
01	44	ED5A	Paleontology and Biostratigraphy of the Upper Bangor...Lookout Mtn., GA-TN	This data set is a biological assay on the history of the Lookout Mountain area.
01	45	ESD5A	Sources of Flood Data for Georgia Counties	This data set contains maps and contact information concerning detailed flood studies in Georgia by county. The Georgia counties in EMTS have been excerpted from the complete document for easier handling.

01	46	ED54	Major Element Analyses: An Aid to Differentiation...Great Valley Carbonates	This data set contains the analytical results from several elemental studies performed in North Georgia over the past few decades. Some of the data contained in this study is pertinent to EMTS.
01	47	ED54	Status Report: Waste Disposal Site Assessment Accomplishments for FY 1984	This data set contains some general site information (location, general conditions, etc.) on projects reviewed over the past three years. Within the EMTS study area, only one site is identified.
01	48	ESS4	Signal Mountain Water Distribution System	This data set contains one layout of the Signal Mountain Utility District. Primary water source is the Tennessee-American Water Company.
01	49	E44	Walker County Rural Water and Sewer Authority, General Plan	This data set contains one blueprint of the general layout of the above agency s rural water distribution system complete with dimensions and valves and fire hydrants clearly noted therein.
01	50	E44	Kensington Water and Sewer Authority, General Plan	This data set contains a Georgia Highway Map upon which the limits of the water system have been roughly sketched. The accuracy and completeness of this data set is questionable.
01	51	1	Chattanooga Interceptor Sewer System Industrial Waste Discharge Monitoring	This data set contains indepth point source water discharge monitoring data. This is the first of several large databases maintained by the City of Chattanooga Interceptor Sewer System.
01	52	1	Industrial Waste Discharge Self-Monitoring Data	This data set is analogous to #0151 with the exception that the data is generated by individual industries and submitted for comparative analyses.
01	53	1	Storm Sewer and Overflow Survey Data Set	This undigitized data set contains data on the municipal storm sewer with emphasis on points of overflow in the system.
01	54	1	Chattanooga ISS Flow and pH Monitoring Data Set	This digitized data set contains information on sewer system flow and pH monitoring data.
01	55	1	Moccasin Bend Wastewater Treatment Plant Effluent Data Set	This data set contains all of the effluent data from the discharge points at the Moccasin Bend Wastewater Treatment Plant.

01	56	1	Brainerd Wastewater Treatment Plant Effluent Data Set	This data set is analogous to 00155 with some minor exceptions as noted in the following information.
01	57	1	Tennessee River Monitoring Data Set	This data set contains analyses of samples taken from the Tennessee River at designated locations in Hamilton and Marion Counties, Tennessee.
04	1	L34E7E	ETAK MAPBASE, ETAK INC.	Urban transportation data bases. Used for automotive navigation.
04	2	14	DYNAMAP, GEOGRAPHIC DATA TECHNOLOGIES (GDT)	A digital data base consisting of an updated and expanded dime file including information such as addresses, zip codes, street networks etc.
04	3	145	UNIVERSITY OF TENNESSEE AT KNOXVILLE-ALL CENSUS BUREAU PUBLICATIONS	UTK is reported here as a source to be considered as supplemental to the U.S. census bureau. UTK houses all census bureau publications, and data may be obtained for a lesser cost than thru the bureau.
04	4	145	TENNESSEE STATE DATA CENTER - ALL CENSUS BUREAU PUBLICATIONS	TSDC is reported as a source to be supplemental to the U.S. census bureau. Most census bureau publications may be obtained through the TSDC more efficiently than through the bureau.
04	5	15	1982 CENSUS OF AGRICULTURE, EPA OFFICE OF PESTICIDE PROGRAMS	Source is digital version of statistical tables relating to agricultural productivity by county. Hardcopy of this source is available at the UNLV Library. Tapecan be bought though the census bureau or obtained free of charge thru EPA OPP.
04	6	L4A7	DONNELLEY MARKETING DEMOGRAPHIC DATA BASE	Digital data base consisting of demographic statistics reproted by block group, enumeration district, and tract levels.
04	7	L4A7	CENSUS BUREAU'S URBAN TRANSPORTATION PLANNING PACKAGE	Digital tape is a special tabulation of 1980 census data tailored to the SMSA consisting of demographic and transportation patterns and projections.
04	8	L5F7	AMBIENT AIR QUALITY MONITORING SITES	Source is a listing of monitoring sites reported in a table format with some associated attributes about the site. This source does not include sampling data.

04	9	L5E7	FIXED STATION AMBIENT WATER MONITORING NETWORK SITES	Source is a listing of monitoring sites with some associated attributes about the site. This source does not include sampling data.
04	10	L5E7	LIST OF ALL ROUTINE RADIOLOGICAL SAMPLING SITES	Source is a listing of sampling sites with associated attributes about the site. Source does not include sampling data.
04	11	35PEAD	Master Reach File	A tape that contains the data for all reaches, shoreline, segments, and boundary segments in the Reach File. There is one record for each reach (66,188 records). Tape is non-labeled, phy.seq., fixed block=5170, ASCII, LRECL=517.
06	1	L4E7	DIGITAL ELEVATION MODEL (DEM)	Digital Elevation Values for the EMTS SMSA. These data were automated largely from USGS 7.5' topographic quadrangle maps.
06	2	L4E7	DIGITAL LINE GRAPH (DLG)	Digital line data on political boundaries,transportation,and hyrography for computer data base. Available in 7.5' and 1:100000 scales. 1:100000 scale DLG does not have political boundaries.
06	3	1	LAND ENVIRONMENTAL SUITABILITY SYSTEM (LESS)	Hamilton county pc ERDAS data base. Gross resolution, but multi-layered.
06	4	L34	SPOT MSS SATELLITE DATA	Satellite multispectral scanner data, 20 meter by 20 meter pixels (resolution), and 60 km by 60 km scenes. The satellite may be programmed to acquire data over a particular area for any season the buyer desires.
06	5	1	ACT.& ABANDONED HAZ.WASTE SITES-LANDFILL SAND GENERATORS OF HAZ. WASTE.	Hamilton and Marion county information in Chattanooga. Sequatchie information is in Knoxville. Source said positional accuracy is less than 100 feet. 1975 to present.
06	6	1	MISCELLANEOUS GIS INFORMATION	TVA has performed several mini- GIS projects within the TN Valley Authority. None of the TVA projects encompasses the entire SMSA. However, some of the information may be useful later as individual projects are performed.
06	7	1	USGS COAL RESERVE DATA BASE (NCRDS) AND ABANDONED UNDERGROUND COAL MINES	UTC Geosciences Dept. is a contractor for USGS. The NCRDS were not available at the initial contact. Maps of the abandoned underground coal mines are available from UTC, Geosciences Dept. UTC only source of some info.

06	8	1	ECONOMIC DATA - HAMILTON COUNTY	1980 census data for: industrial sites, available office space, apts, shopping centers, employment, key business indicators, and companies that employ 100+ people. (Wang 2200 diskette available)
06	9	1	GEOLOGIC MAP W/ MINERAL RESOURCES AND OIL-GAS WELL	Also included in maps: magnetic intensity contours, 100 yr. flood lines, sinkholes, landslides, and water well locations. (TN Div. Geology bulletin 79 part II, published 1978.
06	10	1	CAVES/SPRINGS	On microfilm. 576 data points from 1970 to present. Digitized on paper-base topo maps, some info was not field checked. Can sort on 13+ variables. TN Cave Survey proprietary info. May be used with permission.(IBM PC AT diskettes)
06	11	1	GEOLOGICAL AND GEOCHEMICAL ENGINEERING (DETS) DATA	Information available for specific construction projects only: Nickajack, Sequoyah, Chickamauga, Raccoon Mtn., Chattanooga Office Complex. (NOTE: a comment states that all data must be "re-entered".
06	12	1	TN PRODUCTION WATER WELLS	
06	13	1	USFS STREAM FLOW	35 08'57" 85 39'59" White City quad, Gizzard Cove 100NW, a mine reclamation study. Also a gaging station on Suzannah Branch just out of area 35 26'36" 85 13'36" Brayton quad, TVA 8111NW
07	1	1	Manufacturer's Data Base	
07	2	1	Federal Underground Injection	
07	3	1	Air Pollution Sources Compliance Status	
07	4	1	CROP REPORTING BOARD COMPUTER MEDIA	
07	5	1	Health and Scientific/Technical Information	
07	6	1	Storage and Retrieval of Water Related Data	

07	7	1	Mortality Studies	
07	8	1	National Pollutants Discharge Permits	
07	9	1	Fuels Inspection at Service Stations	
07	10	1	Truck Noise Data	
07	11	1	Meteorlogical Data	
07	12	1	Census Data	
07	13	1	Geographic Data	
08	1	1	Chat.Waste Discharges Part I, Upstream from the City Water Co.Intake	Enforcement & Permitting
08	2	1	Chat. Waste Discharges Part II, Downstream from the City Water Co.	Enforcement & Permitting
08	3	1	NPDES COMPLIANCE MONITORING	Compliance monitoring & Monitoring
08	4	1	Air Quality Monitoring (Primarily the NAMS network)	Establishing SIPS
08	5	1	Air Emissions Data	Emissions updates,Input to SIPS
08	6	1	EMISSIONS SIPS INPUT	Input to a nonattainment SIPS that has ended.
08	7	1	SLAMS TSP SITE AT ROSSVILLE	SIPS,etc.
08	8	1	RCRA DATA	
08	9	1	CERCLA DATA	Enforcement data
08	10	1	CERCLIS	Data for CERCLA remedial action,control & clean-up, and site screening.
08	11	1	PESTICIDE ESTABLISHMENTS	Registration of pesticide establishments.
08	12	1	NATIONAL PESTICIDE SURVEY	
08	13	1	WATER SUPPLY & IND-MUN DISCHARGE MAP & LISTING	

09	1	1	Model State Information System	Contains data used for tracking of public water systems' compliance with the federal and state safe drinking water act. Includes violation dates and types as well as general facility information.
09	2	1	Permit Compliance System	Contains data used to manage the National Pollutant Discharge Elimination System (NPDES) program. Included are facility information and data for tracking permit information, compliance status, and enforcement status for each facility.
09	3	1	Municipal Sewage Treatment Inventory (MUST)	Contains operation, maintenance, personnel, and facility information data for all municipal wastewater treatment plants in Tennessee.
09	4	1	Tennessee Water Well Driller's Information System	A repository of well site, well driller, and pump setter data. Included are well location, type, well description, and assorted chemical, geological, and managerial information on water wells condtructed in Tennessee.
09	5	1	Emissions Inventory System	Contains facility names, locations, process operations, and estimated annual air pollutant emissions in tons per year for facilities permitted to discharge pollutants into the air. Also included are permit application processing data.
09	6	1	Agricultural Information - Catoosa County, Georgia	A summary of information gathered through verbal communication with the Catoosa county Agricultural Extension Agent, Steve Moraitakis. Included are data on the number & type of farms, as well as a map depicting locations of individual farms
09	7	1	Agricultural Information - Dade County, Georgia	A summary of information gathered through verbal communication with Mr. Mickey Cumming, the Dade county Agricultural Extension Agent. Includes a map of farm locations, limited distribution data, and a bulletin: Georgia Agricultural Facts.
09	8	1	Agricultural Information - Walker County, Georgia	Summary of information gathered from verbal communication with Walker County A.E.S. Agent, Mike Bunn. Map of general farm locations, agricultural practices, and general trends occuring in the Georgia agricultural industry.

09	9	1	Agricultural Information - Hamilton County, Tennessee	Several maps from Ham. Co. Soil Cons. Svce. mailing list of each farm in county Agricul. practices info. and information gathered from verbal communication with Joe Nickels, the Hamilton county Agricultural Extension Service Agent.
09	10	1	Agricultural Information - Marion County, Tennessee	A collection of maps from the Marion Co. Soil Conservation service. 1982 Census of Agriculture. Mailing list for every farm in Marion county. Information gathered from verbal communication with William Hall, the Marion Co. A.E.S. agent.
09	11	1	Agricultural Information - Sequatchie County, Tennessee	Contains information gathered from verbal communication with Bo Freeman, the Sequatchie county Agriculture Extension Agent. Includes limited farm management and distribution information, and a map depicting individual farm locations (1978).
09	12	1	Hospital Discharge Data for 1982-1985	Contains hospital discharge data for two Chattanooga area hospitals. Period covered is 1982-1985. Names and other personal identifiers have been removed from each record. There is one file for each hospital.
09	13	1	Air Quality Data Handling System	Contains air quality monitoring data collected from a number of different agencies. Data includes collecting agency, location, sampling type, parameters. colection & analysis method, and various NEDS data flags.

Summary documentation:

Agency code - The first numbers of the data set identification number identifying the agency that entered the data.

Participants gathering data.

01 Chattanooga-Hamilton County Air Pollution Control Board
02 Environmental Monitoring Systems Laboratory - Las Vegas
03 Environmental Monitoring Systems Laboratory - Research Triangle Park
04 Environmental Research Center (Las Vegas)
05 EPA Office of Toxic Sustances (Washington D.C.)
06 Lockheed Engineering and Management Services Co. (Las Vegas)
07 Northrop Services, Inc. (Research Triangle Park)
08 Region 4 (EPA, Atlanta, GA)
09 Tennessee Department of Health and Environment (Nashville)
10 Tennessee Valley Authority (Chattanooga)

Reference No. - A number given to a data set as identification. This number is entered by the participating agencies and is usually sequential.

Title - Title of data set.

Description - Abstract of data set.

Status codes - 1) Data inventoried only.
2) Printout of data on hand.
3) Data available in digital form.
4) Data available in hardcopy only.
5) Data transfered to a VMS file.
6) Data entered into ARC/INFO.
7) Quality Assurance completed.
E) Data on hand at the ERC.
L) Data on hand at LEMSCO.
R) Data on hand at RTP.
A) Data needs review.
B) Data in review.
C) Data review completed.
S) Spatial (maps) included with data.
P) Partial coverage of MSA on hand.
D) Documents included with data.