74-KPM-17
(REPORT NUMBER)

AIR POLLUTION EMISSION TEST

THE BUCKEYE CELLULOSE CORPORATION
(PLANT NAME)

FOLEY, FLORIDA
(PLANT ADDRESS)

U. S. ENVIRONMENTAL PROTECTION AGENCY
Office of Air and Water Programs
Office of Air Quality Planning and Standards
Emission Standards and Engineering Division
Emission Measurement Branch
Research Triangle Park, N. C. 27711

STATIONARY SOURCE TESTING OF A KRAFT PULP MILL

at

The Buckeye Cellulose Corporation
Foley, Florida

EPA Project Report No. 74-KPM-17

by

William H. Maxwell

Midwest Research Institute
EPA Contract No. 68-02-0228

MRI Project No. 3585-C(41)

For

Office of Air Quality Planning and Standards
Environmental Protection Agency
Research Triangle Park, North Carolina 27711

Attn: Mr. Lance S. Granger

PREFACE

The work reported herein was conducted by Midwest Research Institute (MRI) under Environmental Protection Agency (EPA) Contract No. 68-02-0228, Task No. 37, Changes Nos. 2 and 5.

The project was under the technical supervision of Mr. Paul C. Constant, Jr., Head, Environmental Measurements Section of the Physical Sciences Division. Mr. William Maxwell served as crew chief and was assisted by Messrs. George Cobb, Bruce DaRos, and John LaShelle. Ms. Christine Guenther was responsible for the data reduction and computer analysis. The analysis of the samples was done by Ms. Carol Green.

Approved for:

MIDWEST RESEARCH INSTITUTE

Paul C. Constant, Jr.
Program Manager

TABLE OF CONTENTS

		Page
I.	Introduction	1
II.	Summary and Discussion of Results	2
III.	Process Description and Operation	7
	A. Process Description	7
	B. Process Operation	10
IV.	Location of Sample Points	14
V.	Sampling and Analytical Procedures	14
	A. Mass Particulate	14
	B. Flue Gas Composition	18
	C. Opacity	18
Appendix A - Results of Analysis - Printout of Computer Calculations		20
Appendix B - Sample Calculations		62
Appendix C - Process Data		67
Appendix D - Field Data		103

LIST OF TABLES

No.	Title	Page
I	Summary of Particulate Results: No. 3 Lime Kiln	3
II	Summary of Particulate Results: No. 2 Recovery Furnace. .	4
III	Summary of Opacity Readings: No. 3 Lime Kiln.	5
IV	Summary of Opacity Readings: No. 2 Recovery Furnace . . .	6
V	Summary of Lime Kiln Process Data During Particulate Sampling	12
VI	Summary of Recovery Furnace and Electrostatic Precipitator Process Data During Particulate Sampling	13
VII	Location of Sampling Points: No. 3 Lime Kiln Stack. . . .	17
VIII	Location of Sampling Points: No. 2 Recovery Furnace Stack.	17

LIST OF FIGURES

No.	Title	Page
1	The Kraft Pulping Process at the Buckeye Cellulose Mill in Foley, Florida.	8
2	Flow Diagram of the No. 3 Lime Kiln at the Buckeye Cellulose Mill in Foley, Florida	9
3	No. 2 Recovery Furnace and Precipitator at the Buckeye Cellulose Mill in Foley, Florida	11
4	Schematic of Stack and Ports: No. 3 Lime Kiln	15
5	Schematic of Stack and Ports: No. 2 Recovery Furnace. . .	16

I. INTRODUCTION

This report presents the results of source testing performed during the period 28 April to 15 May 1974 by Midwest Research Institute on two processes of the Buckeye Cellulose Corporation mill at Foley, Florida. Six tests each for particulate emissions were conducted on the stacks of the No. 3 lime kiln and the No. 2 black liquor recovery furnace during periods of continuous process operation. The composition of the stack gas was determined by Orsat analysis. Plume opacity readings were taken for each test. Process conditions were monitored by the Environmental Protection Agency.

All tests were conducted on the stacks following the control devices, a wet scrubber for the lime kiln, and an electrostatic precipitator for the recovery furnace. Tests were completed in accordance with the Federal Register, Vol. 36, No. 159, Part II, 17 August 1971, except as may be defined later in this report.

The scope of work for this project specified:

1. Three tests on the lime kiln when natural gas was the firing fuel;

2. Three tests on the lime kiln when fuel oil was the firing fuel; and

3. Six tests on the recovery furnace.

The following sections of this report present:

1. The summary and discussion of results;

2. The process description and operation;

3. The location of the sample points; and

4. The sampling and analytical procedures.

II. SUMMARY AND DISCUSSION OF RESULTS

Tables I and II present a summary of the particulate load results for the lime kiln tests and the recovery furnace tests, respectively. Data are given for the front-half and total catch and presented as grains per dry standard cubic foot (gr/dscf), milligrams per normal cubic meter (mg/ncm), pounds per hour (lb/hr), and kilograms per hour (kg/hr). Computer printouts of the field data and reductions are found in Appendix A. Sample calculations are found in Appendix B.

The sampling volumes for the lime kiln tests ranged from 56.57 to 60.09 dscf, with only Run K-6 being over 60 dscf. A longer sampling time would have increased the volume but as sufficient sample was collected, and the maximum variation from the 60-dscf minimum volume required by the Federal Register was only 5.7%, it is not believed that the results will be biased. Sampling volumes for the recovery furnace tests ran from 104.40 to 130.09 dscf. Values for the percent isokinetic sampling rate varied from 95.8 to 111.6, with only Run R-7 being out of the acceptable range. The results for Run R-12 appear out of line with those of R-7 through R-11 but subsequent checking has verified their accuracy.

As the lime kiln stack gas stream was saturated with water vapor and contained water droplets, percent moisture determinations were obtained from a psychrometric chart. The volume of water collected value needed for entry into the computer program was back-calculated from this percent moisture value using the standard equation. The moisture percentages for the lime kiln tests ranged from 34.5 to 41.0. As the recovery furnace gas stream was not saturated with water vapor, the normal procedure was followed. Values of the percent moisture ranged from 29.6 to 32.6 for the recovery furnace tests.

Tables III and IV present summaries of the plume opacity readings for the lime kiln and recovery furnace tests, respectively. Data are given for both observers on each test. Difficulty in reading the plumes was encountered due to intermingling plumes and attached steam plumes.

TABLE I

SUMMARY OF PARTICULATE RESULTS: NO. 3 LIME KILN

			Particulate Load					
			Front-Half Catch		Total Catch			
Run	Fuel	Date	(gr/dscf)[a]	(mg/ncm)[a]	(gr/dscf)[a]	(mg/ncm)[a]	(lb/hr)[a]	(kg/hr)[a]
K-1	Gas	30 April	0.0327	74.8	0.0369	84.5	4.80	2.18
K-2	Gas	1 May	0.0255	58.4	0.0310	70.9	4.19	1.90
K-3	Gas	1 May	0.0214	49.0	0.0276	63.1	3.42	1.55
Average			0.0265	60.7	0.0318	72.8	4.14	1.88
K-4	Oil	2 May	0.2545	582	0.259	592	32.5	14.8
K-5	Oil	2 May	0.2614	598	0.274	627	35.7	16.2
K-6	Oil	3 May	0.2330	533	0.237	543	30.5	13.8
Average			0.2496	571	0.257	587	32.9	14.9

a/ gr/dscf = grains per dry standard cubic foot
mg/ncm = milligrams per normal cubic meter
lb/hr = pounds per hour
kg/hr = kilograms per hour

TABLE II

SUMMARY OF PARTICULATE RESULTS: NO.2 RECOVERY FURNACE

		Particulate Load					
		Front-Half Catch		Total Catch			
Run	Date	(gr/dscf)	(mg/ncm)	(gr/dscf)	(mg/ncm)	(lb/hr)	(kg/hr)
R-7	7 May	0.0144	32.9	0.046	106	45	20.2
R-8	8 May	0.0120	27.5	0.048	111	49	22.3
R-9	9 May	0.0132	30.2	0.044	102	43	19.6
R-10	10 May	0.0120	27.5	0.034	78	33	15.1
R-11	13 May	0.0159	36.3	0.063	144	62	28.0
R-12	14 May	0.0153	34.9	0.102	232	105	47.6
Average		0.0138	31.6	0.056	129	56	25.5

TABLE III

SUMMARY OF OPACITY READINGS: NO. 3 LIME KILN

Run No.	K-1		K-2		K-3		K-4		K-5		K-6	
Date	30 April 1974		1 May 1974		1 May 1974		2 May 1974		2 May 1974		3 May 1974	
	Obs. 1[a]	Obs. 2[a]	Obs. 1	Obs. 2	Obs. 1	Obs. 2	Obs. 1	Obs. 2	Obs. 1	Obs. 2	Obs. 1	Obs. 2
Duration of Observation (min)	123	131	121	130	130	130	130	130	130	130	131	130
Total No. of Readings	492	524	484	520	520	520	520	520	520	520	524	520
No. Readings Unobservable	0	21	0	484	146	399	180	503	0	436	0	520
No. Readings 0% Opacity	0	0	0	0	0	0	0	0	0	0	0	0
5	488	503	484	36	374	121	286	4	72	81	0	0
10	4	0	0	0	0	0	40	6	337	3	314	0
15	0	0	0	0	0	0	13	3	88	0	198	0
20	0	0	0	0	0	0	1	0	23	0	12	0
25	0	0	0	0	0	0	0	4	0	0	0	0
30-100	0	0	0	0	0	0	0	0	0	0	0	0
Percent Readings Unobservable	0	4.01	0	93.08	28.08	76.73	34.62	96.73	0	83.85	0	100
Percent Readings 0% Opacity	0	0	0	0	0	0	0	0	0	0	0	0
5	99.19	95.99	100	6.92	71.92	23.27	55.00	0.77	13.85	15.58	0	0
10	0.81	0	0	0	0	0	7.69	1.15	64.81	0.58	59.92	0
15	0	0	0	0	0	0	2.50	0.58	16.92	0	37.79	0
20	0	0	0	0	0	0	0.19	0	4.42	0	2.29	0
25	0	0	0	0	0	0	0	0.77	0	0	0	0
30-100	0	0	0	0	0	0	0	0	0	0	0	0
	100	100	100	100	100	100	100	100	100	100.01	100	100
Average Opacity = $\frac{\text{Sum of Nos.}}{\text{No. Readings Observable}}$	5.04	5.00	5.00	5.00	5.00	5.00	6.01	13.24	10.60	5.19	12.12	--

a/ Obs. 1 = Observer 1. Obs. 2 = Observer 2.

TABLE IV

SUMMARY OF OPACITY READINGS: NO. 2 RECOVERY FURNACE

Run No.	R-7		R-8		R-9		R-10		R-11		R-12	
Date	7 May 1974		8 May 1974		9 May 1974		10 May 1974		13 May 1974		14 May 1974	
	Obs. 1[a]	Obs. 2[a]	Obs. 1	Obs. 2	Obs. 1	Obs. 2	Obs. 1	Obs. 2	Obs. 1	Obs. 2	Obs. 1	Obs. 2
Duration of Observation (min)	242	237	233	211.5	252	210	281	240	281	239	278	247
Total No. of Readings	968	948	932	846	1,008	840	1,124	960	1,124	956	1,112	988
No. Readings Unobservable	0	0	0	0	252	413	198	224	74	219	0	0
No. Readings 0% Opacity	0	0	0	0	0	0	0	0	0	0	0	0
5	858	875	867	817	688	408	873	709	985	709	1,022	928
10	59	38	35	17	45	8	22	15	21	13	32	28
15	28	14	26	6	11	7	22	8	33	9	47	23
20	9	8	2	6	11	2	8	4	10	4	9	9
25	12	5	2	0	1	1	1	0	1	1	2	0
30	0	5	0	0	0	1	0	0	0	1	0	0
35	1	0	0	0	0	0	0	0	0	0	0	0
40	0	2	0	0	0	0	0	0	0	0	0	0
45	1	0	0	0	0	0	0	0	0	0	0	0
50	0	1	0	0	0	0	0	0	0	0	0	0
55-100	0	0	0	0	0	0	0	0	0	0	0	0
Percent Readings Unobservable	0	0	0	0	25.00	49.17	17.62	23.33	6.58	22.91	0	0
Percent Readings 0% Opacity	0	0	0	0	0	0	0	0	0	0	0	0
5	88.64	92.30	93.03	96.57	68.25	48.57	77.67	73.85	87.63	74.16	91.91	93.93
10	6.10	4.01	3.76	2.01	4.46	0.95	1.96	1.56	1.87	1.36	2.88	2.83
15	2.89	1.48	2.79	0.71	1.09	0.83	1.96	0.83	2.94	0.94	4.23	2.33
20	0.93	0.84	0.21	0.71	1.09	0.24	0.71	0.42	0.89	0.42	0.81	0.91
25	1.24	0.53	0.21	0	0.10	0.12	0.09	0	0.09	0.10	0.18	0
30	0	0.53	0	0	0	0.12	0	0	0	0.10	0	0
35	0.10	0	0	0	0	0	0	0	0	0	0	0
40	0	0.21	0	0	0	0	0	0	0	0	0	0
45	0.10	0	0	0	0	0	0	0	0	0	0	0
50	0	0.11	0	0	0	0	0	0	0	0	0	0
55-100	0	0	0	0	0	0	0	0	0	0	0	0
	100	100.01	100	100	99.99	100	100.01	99.99	100	99.99	100.01	100
Average Opacity = $\frac{\text{Sum of Nos.}}{\text{No. Readings Observable}}$	6.05	5.83	5.54	5.28	5.69	5.43	5.51	5.29	5.58	5.35	5.72	5.51

a/ Obs. 1 = Observer 1. Obs. 2 = Observer 2.

III. PROCESS DESCRIPTION AND OPERATION[a/]

The Buckeye Cellulose Corporation mill at Foley, Florida, produces about 900 tons of bleached kraft pulp per day. Buckeye Cellulose uses the dissolving kraft pulping process. This process is similar to the normal kraft process, but incorporates steam digestion of the wood before digestion with the usual cooking liquor.

The EPA test program conducted at this mill included particulate emission measurements on the recovery furnace and the lime kiln.

A. Process Description

1. General: Kraft pulp is produced from wood as shown in Figure 1. In the process wood is chipped into small pieces, then cooked in 19 batch digesters at elevated temperature and pressure. The wood is first cooked with steam and then with the cooking chemicals, called white liquor. The cooking chemicals are sodium hydroxide and sodium sulfide in water solution. The white liquor chemically dissolves lignin leaving wood cellulose (pulp), which is filtered from the spent liquor and washed. The pulp is then bleached and made into paper.

The balance of the process is designed to recover the cooking chemicals. Spent cooking liquor and the pulp wash water are combined for treatment. The combined stream, called weak black liquor, is concentrated in multiple-effect evaporators. The black liquor receives its final concentration in direct contact evaporators and is then fired to a recovery furnace.

2. Lime kiln: The No. 3 lime kiln was manufactured by Allis Chalmers and installed in 1965. The kiln is designed to produce 125 tons of lime per day. This is equivalent to a pulp production rate of about 500 tons per day. This rotary lime kiln is 181 ft long, with an inside diameter of 10 ft. It is fired with either natural gas (principle fuel) or No. 2 fuel oil (reserve fuel).

The feed to the kiln is the calcium carbonate slurry that precipitates from the causticizing tanks. The slurry is washed and dried in a centrifuge, as shown in Figure 2. The dried cake (calcium carbonate) is conveyed to the kiln where it is roasted and carbon dioxide is driven off, leaving lime (calcium oxide) as product.

A venturi scrubber is used to control the particulate emissions from the lime kiln. The scrubber was manufactured by Chemico and installed in 1971. The venturi scrubber has a design pressure drop of 20 in. of water. Lime mud centrifuge centrate is used as makeup water to the scrubber system.

---

a/ This section furnished by EPA.

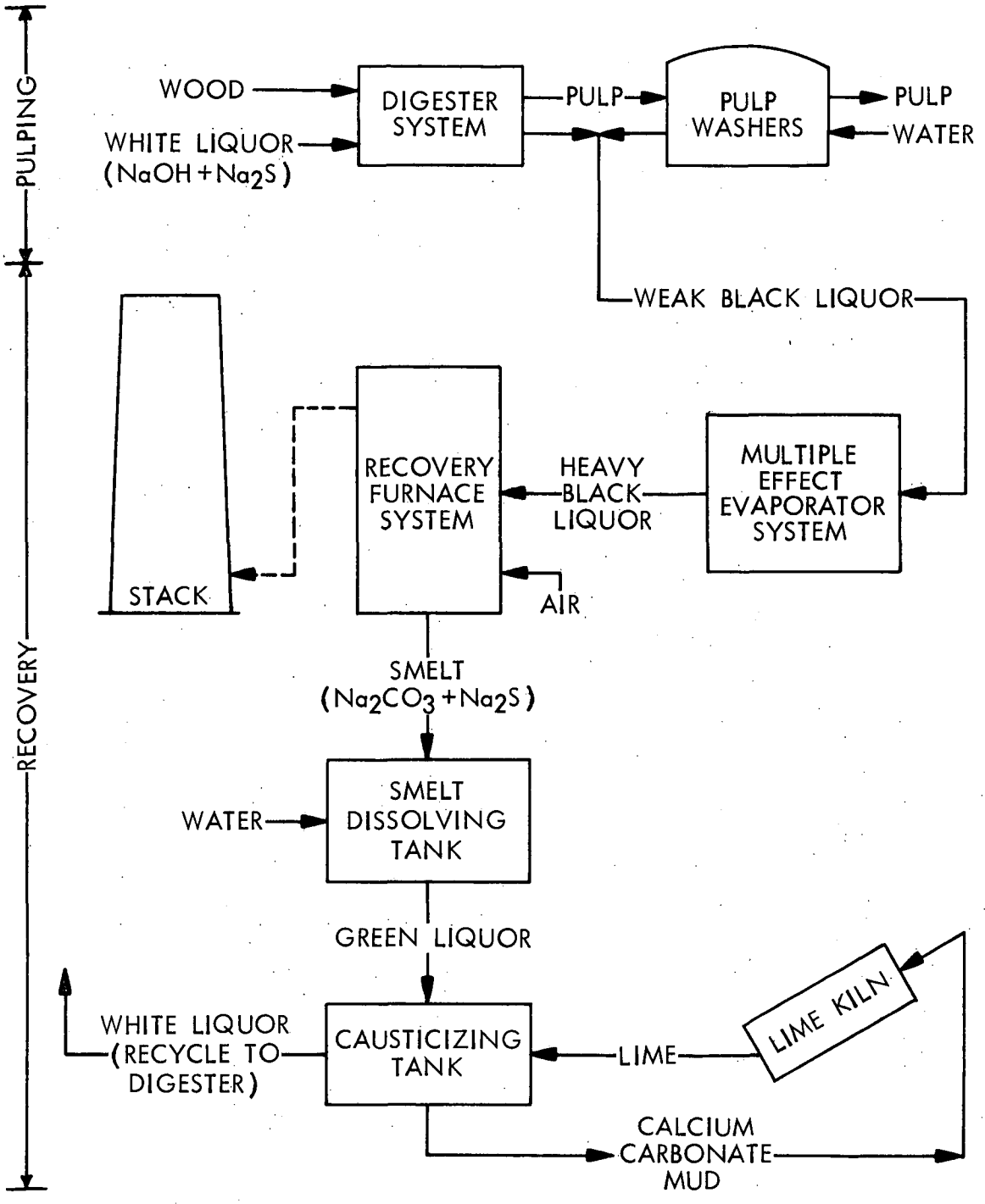

Figure 1 - The Kraft Pulping Process at the Buckeye Cellulose Mill in Foley, Florida

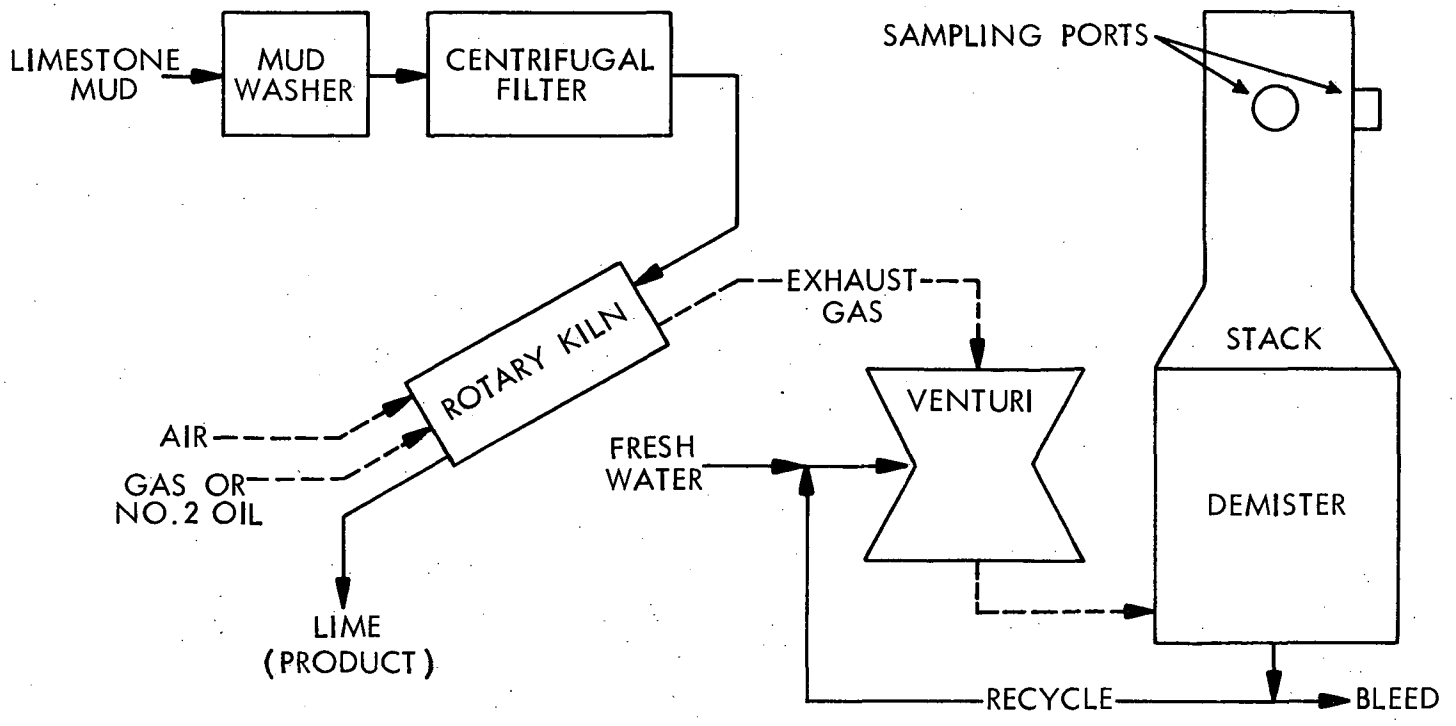

Figure 2 - Flow Diagram of the No. 3 Lime Kiln at the Buckeye Cellulose Mill in Foley, Florida

3. Recovery furnace: The No. 2 recovery furnace was designed by Babcock and Wilcox to operate at an equivalent pulp production rate of 550 tons/day. The recovery furnace normally operates at 16% overload, burning 125 to 140 gal. of black liquor per min and 2 to 10 gal. of No. 6 fuel oil per min. The furnace has a conventional design with direct contact evaporators. The furnace was installed in 1958.

Exhaust gases from the furnace are cleaned in an electrostatic precipitator. The precipitator was manufactured by Western Precipitation, and installed in 1972. The precipitator was designed to treat 300,000 actual cubic feet of combustion gases per minute. As shown in Figure 3, the precipitator has two separate chambers in parallel; each chamber has four electrical fields. The precipitator is situated near ground level and exhaust through a tall stack.

Dust collecting on the precipitator electrodes is shaken loose by a system of rappers. The rappers operate in a continuous cycle, with each cycle lasting 3 min. The dust falls into hoppers and is recycled to the process.

B. Process Operation

1. General: The purpose of the tests was to measure emission levels during normal mill operation. Process conditions were carefully observed, and testing was done only when the test facility appeared to be operating normally. During the tests, important operating parameters were monitored and recorded on data sheets. Readings were taken about once every half-hour. These data, and a key to the entries, are in Appendix C. The process data are summarized below.

2. Lime kiln: As far as is known from the process information and conversations with the operators, the lime kiln and scrubber operated normally during the tests. Lime mud feed rate to the centrifuge was between 95 and 100 gal/min. The solids content of the lime mud ranged between 34.7 and 39.5%. The pressure drop across the venturi scrubber ranged between 15 and 18 in. of water. The averages of the major process parameters for each test are listed in Table V.

3. Recovery furnace: As far as is known from the process data and conversations with the operators, the recovery furnace was operating normally during the tests. Black liquor feed rate was steady between 130 and 141 gal/min. The black liquor solids content ranged between 58.5 and 62.0%. Steam production was between 215,000 and 260,000 lb/hour throughout the testing. Supplemental oil was burned at about 5 to 10 gal/min. During the fourth tests no supplemental oil was required for steam production.

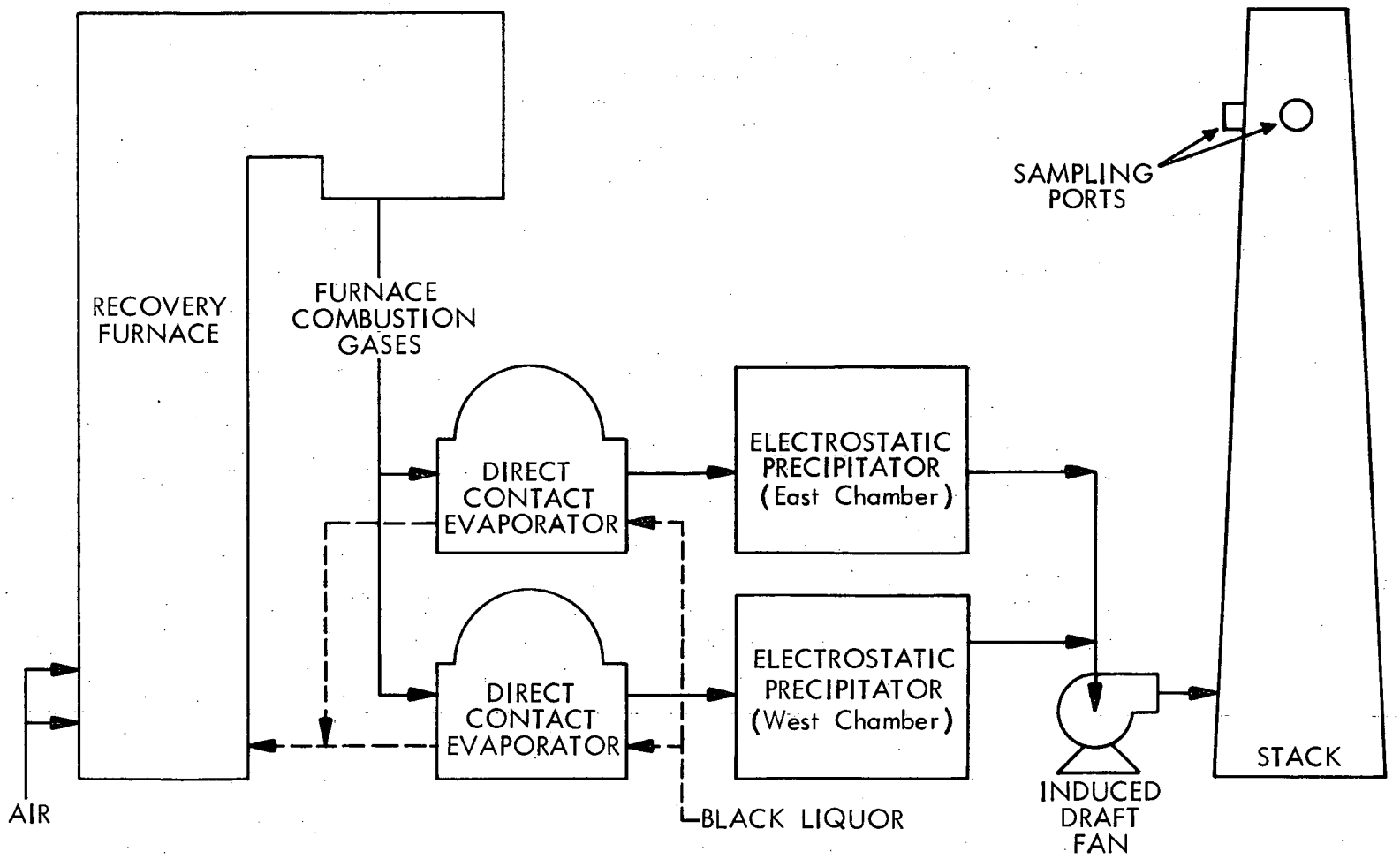

Figure 3 - No. 2 Recovery Furnace and Precipitator at the Buckeye Cellulose Mill in Foley, Florida

TABLE V

SUMMARY OF LIME KILN PROCESS DATA DURING PARTICULATE SAMPLING

Run	Fuel Type	Fuel Flow	Mud Flow to Centrifuge (gpm)	Solids Content (%)	Scrubber Pressure Drop (in. H_2O)	Lime Production (tons/day)
K-1	Gas	78[a]	96	38.3	17	165
K-2	Gas	75[a]	100	38.9	16	167
K-3	Gas	75[a]	99	38.4	16	169
K-4	Oil	7.3[b]	100	37.8	16	166
K-5	Oil	7.2[b]	98	38.7	16	170
K-6	Oil	7.4[b]	107	35.0	16	169

a/ 1,000 cu ft/hr
b/ Gallons per minute

The averages of major operating parameters for each test are listed in Table VI. The furnace-induced draft fan was cleaned with steam at approximately 12-min intervals. Soot is blown from the boiler tubes continuously.

The operation of the electrostatic precipitator was also monitored during the tests. As far as is known the precipitator operated normally during the tests. The primary voltage and current drawn by each of the four control sections were monitored. The average primary voltages during each test are also summarized in Table VI.

TABLE VI

SUMMARY OF RECOVERY FURNACE AND ELECTROSTATIC PRECIPITATOR PROCESS DATA DURING PARTICULATE SAMPLING

	Recovery Furnace				Precipitator Primary Voltage			
Run	Black Liquor Flowrate (gpm)	Solids Content (%)	Supplemental Fuel Flow (gpm)	Steam Production (lb/hr)	Field A	Field B	Field C	Field D
R-7	130	61.0	9.8	251,000	270	329	309	284
R-8	132	61.4	9.2	255,000	270	331	308	287
R-9	136	60.3	6.2	241,000	261	342	207	274
R-10	138	60.3	0.0	223,000	269	330	305	265
R-11	137	61.2	6.1	238,000	273	335	314	265
R-12	140	60.0	13.5	247,000	265	330	326	274

IV. LOCATION OF SAMPLE POINTS

Figure 4 shows a schematic layout of the lime kiln stack. Existing 3-1/2 in. ID ports were used. Although not located in accordance with the Federal Register, Vol. 36, No. 159, 17 August 1971, with regard to the minimum number of stack diameters downstream from disturbances, they were used with EPA approval.

Figure 5 shows a schematic diagram of the recovery furnace stack. Existing 6-in. ID ports were used. Their location was in accordance with EPA and Federal Register guidelines.

Tables VII and VIII show the sampling points used for particulate sampling on the lime kiln and recovery furnace stacks, respectively. For the lime kiln, 24 points per traverse were used, while for the recovery furnace, three points per traverse were used.

Integrated gas sampling for flue gas composition was done from the same ports as for particulate sampling.

V. SAMPLING AND ANALYTICAL PROCEDURES

A. Mass Particulate

Particulate samples were taken with Research Appliance Company Model 2243 "Stacksamplr" equipment, modified by MRI. Sampling train specifications were in compliance with the Federal Register, Vol. 36, No. 159, 17 August 1971.

A preliminary velocity and temperature profile was taken on each stack. A preliminary moisture determination was made on the recovery furnace stack. Pyrex glass probe liners were used for sampling in all tests.

Sampling time on the lime kiln stack was 3 min/point for a total sample time of 144 min. This permitted two tests per day to be run. Sampling time on the recovery furnace stack was 24 min/point for the first run and 20 min/point thereafter.

a. Elevation

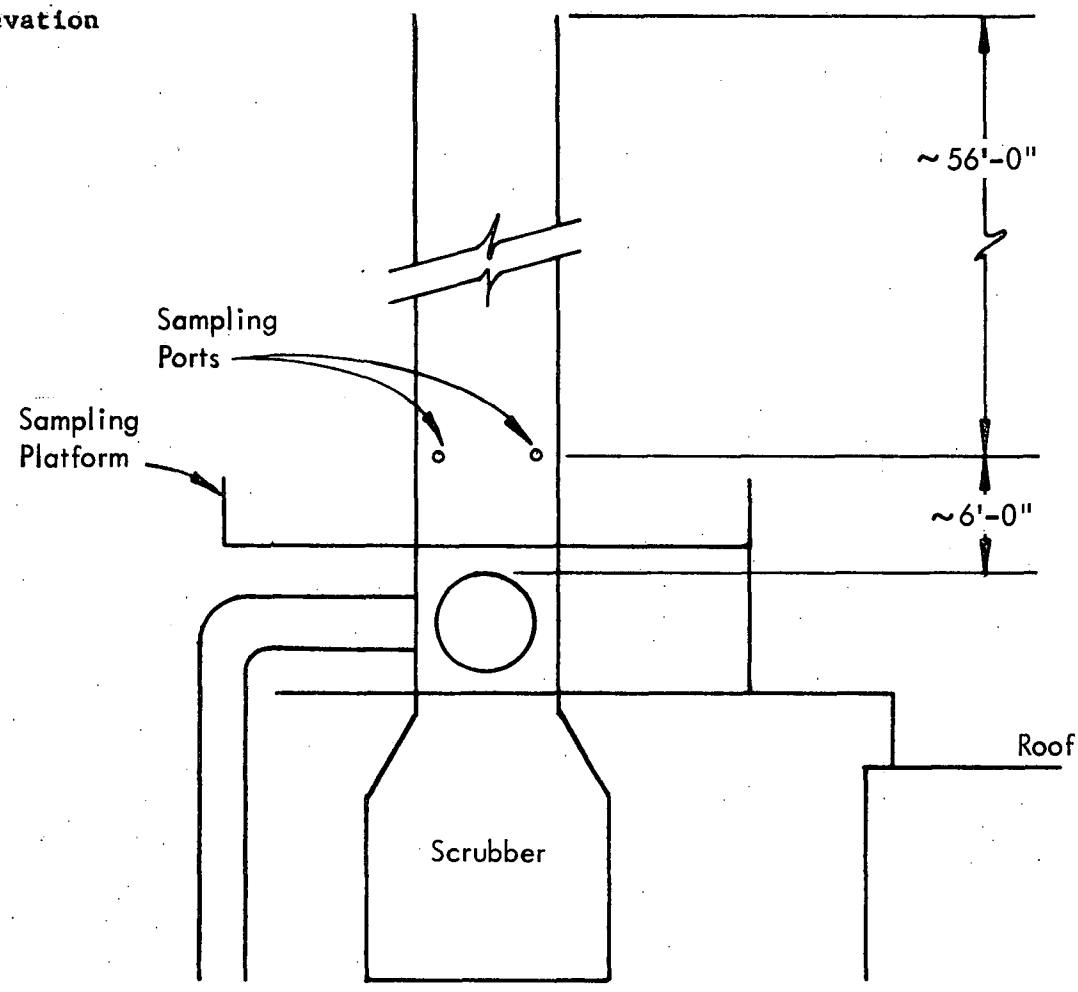

b. Plan

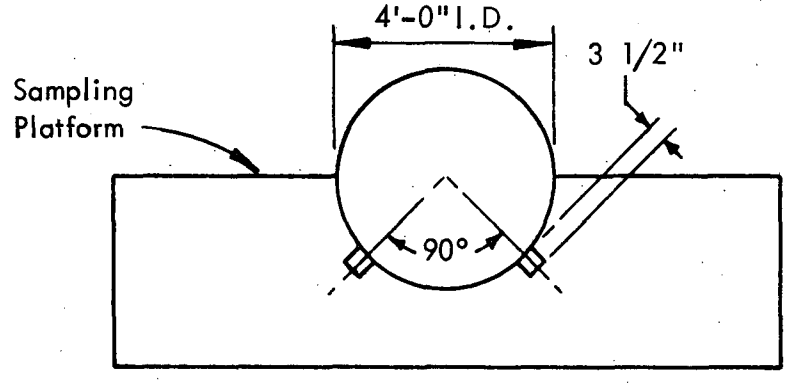

Not to Scale

Figure 4 - Schematic of Stack and Ports: No. 3 Lime Kiln

a. Elevation

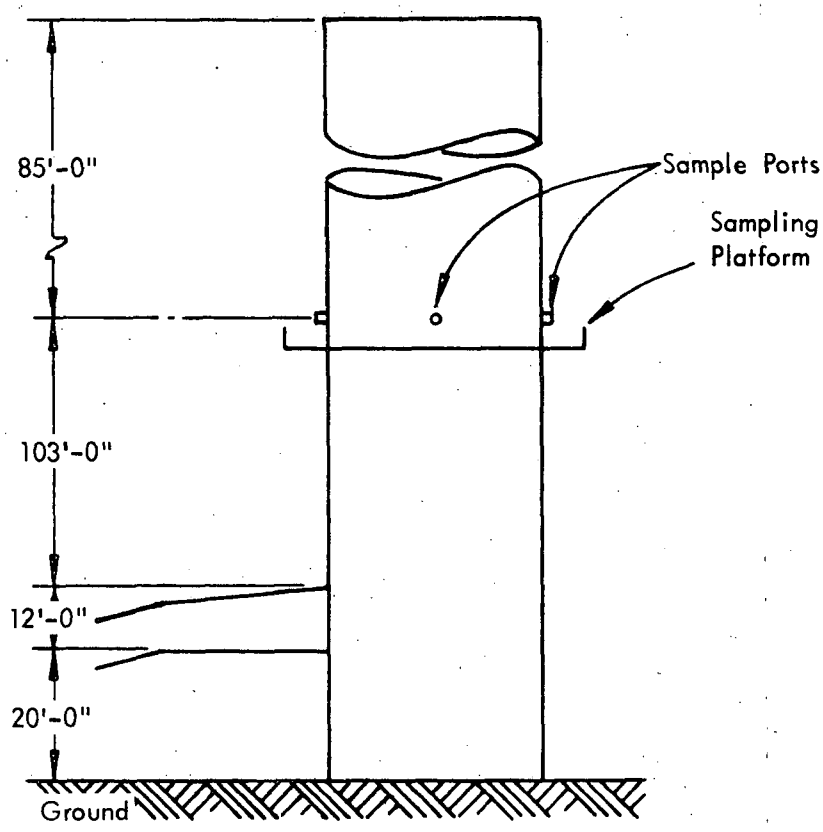

b. Plan

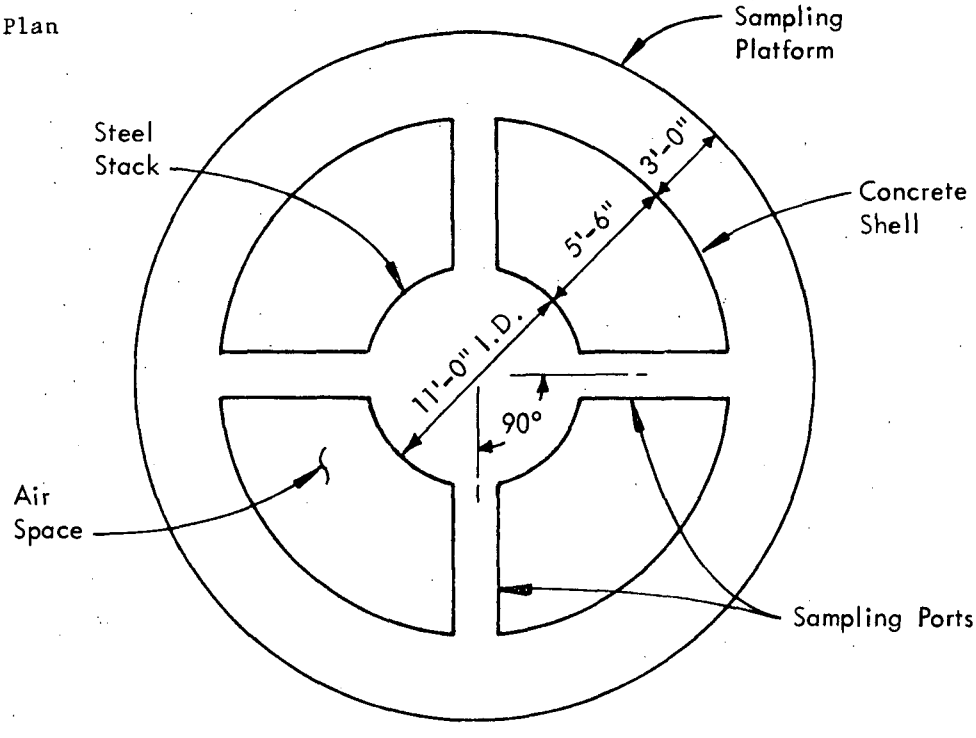

Figure 5 - Schematic of Stack and Ports: No. 2 Recovery Furnace

TABLE VII

LOCATION OF SAMPLING POINTS: NO. 3 LIME KILN STACK

Stack ID = 48 in.

Point	Fraction of Stack ID (%)	Distance from Inside Wall (in.)
1	1.1	1
2	3.2	1-1/2
3	5.5	2-5/8
4	7.9	3-3/4
5	10.5	5
6	13.2	6-3/8
7	16.1	7-3/4
8	19.4	9-1/4
9	23.0	11
10	27.2	13
11	32.3	15-1/2
12	39.8	19-1/8
13	60.2	28-7/8
14	67.7	32-1/2
15	72.8	35
16	77.0	37
17	80.6	38-3/4
18	83.9	40-1/4
19	86.8	41-5/8
20	89.5	43
21	92.1	44-1/4
22	94.5	45-3/8
23	96.8	46-1/2
24	98.9	47

TABLE VIII

LOCATION OF SAMPLING POINTS: NO. 2 RECOVERY FURNACE STACK

Stack ID = 132 in.

Point	Fraction of Stack ID (%)	Distance from Inside Wall (in.)
1	4.4	5-3/4
2	14.7	19-3/8
3	29.5	39

This yielded 288- and 240-min total sample times, respectively. Two ports were sampled prior to a lunch break, and then the test was completed following lunch.

Due to the volume of water collected during testing on both stacks, the first impinger was replaced halfway through the test with a fresh impinger containing 100 ml of distilled deionized water. This practice was begun with Run K-5. For the lime kiln tests, the filter was also replaced, beginning with Run K-5.

Problems were encountered on the lime kiln tests with water in the pitot lines due to the saturated gas stream. An air line was obtained and the lines were periodically purged to ensure proper readings.

For Run K-4, it was observed that water had been pulled over into the silica gel impinger. It is not believed that this will affect the results, as the catch should be contained on the filter and the first two impingers. Also, the volume of water collected per se was not used for moisture determinations on the lime kiln stacks as previously mentioned. During Run R-7, a piece of glassware was observed to be broken. The piece was replaced and the test restarted.

Analysis of the particulate samples was in compliance with the Federal Register, Vol. 36, No. 159, 17 August 1971.

B. Flue Gas Composition

An integrated gas sample was obtained over the duration of the mass-particulate sampling time. The sampling was adjusted such that the bag would be full at approximately the same time as the end of the particulate test.

Analysis of the gas for percent CO_2, O_2, and CO was obtained by Orsat analysis. For Runs K-1 through K-3, the MRI Burrell instrument was used. As the value of the CO_2 was such that the O_2 read off-scale on this instrument for Run K-4, the sample was lost attempting to obtain values. A Hays instrument was borrowed from the mill for the remainder of the tests and no further samples were lost. Values obtained for Run K-5, run the same day and under the same conditions as K-4, were used for K-4 also.

C. Opacity

Opacity observations of the stack plumes were made by two observers in accordance with the August 1971 Federal Register. Due to the length of

the mass particulate tests, the observers were allowed to take periodic breaks, as long as there was an overlapping period where both were observing between breaks.

The plan was to begin opacity observations prior to the start of the mass particulate run and continue them past its completion. However, due to a gradual and continuing deterioration in radio communications between stack and ground, it cannot be stated with assurance that the plan was carried out for all tests. The total period of opacity observations was increased, particularly for the recovery furnace, in an attempt to more closely adhere to the plan.

The observers chose their own observation locations and timed the readings using Kodak timers (Model 8239) synchronized at the start of each test. Four readings per minute were taken. Problems were encountered with intermingling plumes and saturated water vapor plumes on the lime kiln stack and with intervening steam on the recovery furnace stack. Each observer made his own determination as to when readings were observable.

APPENDIX A

RESULTS OF ANALYSIS - PRINTOUT OF COMPUTER CALCULATIONS