United States
Environmental Protection
Agency

Office of Air Quality
Planning and Standards
Research Triangle Park NC 27711

EMB Report 80-SNF-1
February 1981

Air

EPA

Synthetic Fiber Manufacturing

Emission Test Report E.I. duPont de Nemours and Company May Plant Camden, South Carolina

SOURCE TEST AT DUPONT

MAY PLANT

CAMDEN, SOUTH CAROLINA

Contract No. 80-02-3545

Work Assignment 1

Project No. 80-SNF-1

Technical Manager: Winton Kelly

Prepared for:

U.S. Environmental Protection Agency
Emission Standards and Engineering Division
Emission Measurement Branch
Research Triangle Park, North Carolina 27711

TRW
Environmental Engineering Division
Post Office Box 13000
Research Triangle Park, North Carolina 27709

TABLE OF CONTENTS

Section		Page
1.0	INTRODUCTION	1
2.0	SUMMARY AND DISCUSSION OF RESULTS	3
3.0	PROCESS DESCRIPTION AND OPERATION	14
4.0	TEST LOCATIONS	16
5.0	SAMPLING AND ANALYTICAL PROCEDURES	28

APPENDICES

A. COMPLETE RESULTS AND CALCULATIONS

B. FIELD DATA SHEETS

C. ANALYTICAL DATA

D. PROCESS INFORMATION

E. SAMPLING PROCEDURES

F. QUALITY CONTROL/QUALITY ASSURANCE

G. TEST LOG

H. PROJECT PARTICIPANTS

1.0 INTRODUCTION

Personnel from TRW Environmental Engineering Division conducted an emission source test under Contract #68-02-3545 for the Environmental Protection Agency-Emission Measurement Branch at E. I. DuPont de Nemours and Company Inc., May Plant, Camden, South Carolina. The emission source testing was conducted over a three week period during the weeks of September 22, September 29 and October 6, 1980. All emission testing under this study was conducted at the ORLON® portion of the DuPont's May Plant.

This facility was tested in order to gather data for the following purposes: 1) to provide characterization of process exhaust gas streams in support of a possible New Source Performance Standard (NSPS) for the Synthetic Fibers Industry (SNF); 2) to gather data for recommendation of a preferred test method for the detection and analysis of the dimethyl formamide (DMF) which is used as a solvent in the dry spinning method of acrylic fiber production; and 3) to detect the presence of acrylonitrile in the process exhaust gas streams.

All sampling and analysis performed at the DuPont facility was conducted by TRW field personnel. Selected samples were returned to TRW's Research Triangle Park (RTP) laboratory for subsequent and further analysis by TRW's analytical laboratory personnel. Plant operating data was gathered by plant personnel under the direction of Mr. C. Reid Earnhart of DuPont and was transmitted to TRW through personnel for Pacific Environmental Services Inc. (PES), Durham, North Carolina, also under contract to EPA for this study. The source test effort was conducted under the direction of Mr. Winton Kelly - Emission Measurement Branch - Technical Manager.

Due to matters of confidentiality, the process exhaust gas streams tested will be identified by code. The key to the code will be contained within the Emission Standards and Engineering Division's (ESED), EPA confidential file.

Section 2.0 will summarize and discuss the results of testing by test location. Section 3.0 will describe the overall process operation. Section 4.0 will deal with the physical description of the sampling locations. Section 5.0 will fully describe the various sampling and analytical techniques utilized to collect and determine the data presented. Appendix A will contain the complete analytical results. The remainder of the appendices will contain supportive data and supplemental information, such as laboratory methods development and field test logs.

2.0 SUMMARY AND DISCUSSION OF RESULTS

A total of nine (9) process exhaust gas streams were sampled and analyzed by various sampling and analytical techniques during the emission source test at DuPont's May Plant. These exhaust gas streams were estimated by the NSS contractor, in cooperation with plant personnel to contain the highest solvent concentrations. For convenience of testing and results reporting, these nine groups were divided into three functional groups and designated as Group I, Group II or Group III test locations. These functional groups were chosen for reasons of proximity of one test location to another and to aid in process data collection along natural breaks in the fiber processing operation. These groupings were as follows:

• GROUP I	-	WDX
	-	CRX
• GROUP II	-	SSX
	-	DMFX
	-	DRY
• GROUP III A	-	SEI
	-	SCX
• GROUP III B	-	PSB
	-	WSX

(NOTE: The individual test locations are labeled by three or four letter codes for reasons of confidentiality.)

At each test location, four sampling and analytical techniques were utilized to characterize the process gas streams for solvent concentration. These sampling and analytical techniques included wet impingement, integrated bag, continuous monitor and silica gel tube

absorption. The continuous monitor was originally set up to be the primary method of collection and analysis since it could perform continuously and indicate process variables as they accured. The wet impingement method and silica gel tube adsorption method were to confirm the continuous data. Due to unforeseen variables in the emissions such as high moisture and concentrations, it became apparent that the process could not be sampled continuously. The condensed water contained almost all of the DMF and the instruments were not heated. The solution was to collect the samples in two phases; a condensed or liquid phase and a non-condensed or gaseous phase. The other methods were run one time only at each location as confirmatory data. In addition to solvent concentration, volumetric flow rate and moisture content of the process gas streams were determined on a daily basis by appropriate sampling techniques. The presence of acrylonitrile was screened on the same gas chromatograph column as was used to quantify solvent (DMF) concentration. A complete description of sampling and analytical techniques may be found in Section 5.0.

2.1 CONCENTRATION, FLOW RATE AND MASS EMISSIONS

The test results of solvent concentration, flow rate, and solvent process emissions are summarized in Table 2.1 by test location and test method. The solvent concentration and the solvent mass emission rates vary considerably between sampling/analytical techniques at the same test location. The concentrations and mass emission rate data should not be taken at face value without considering the advantages and disadvantages of each method as implemented in the field. Section 2.2 discusses in depth the qualification of the data presented in Table 2.1. Example calculations used to reduce the sampling and analytical data may be found in Appendix A.2. The complete results for each sampling and analytical method may be found in Appendix A.1.

2.2 METHODS: QUALIFICATIONS AND RECOMMENDATIONS

Because of the wide variation in operating conditions (moisture, temperature, solvent concentration), the range of results and the different types of sampling methods utilized in the field at the various test locations, a point by point discussion of the results by test

TABLE 2.1 - SUMMARY OF RESULTS BY TEST LOCATION - DUPONT (MAY PLANT) CAMDEN, S.C.

LOCATION	METHOD	CONCENTRATION (PPMV as DMF)	VOLUMETRIC FLOWRATE (DSCMM)	VOLUMETRIC FLOWRATE (DSCFM)	EMISSION RATES (lb DMF)/hr	EMISSION RATES (kg DMF)/hr	EMISSION RATES (lb DMF)/lb product
WDX	Wet Impingement[a]	---	487	17224	---	---	---
	Integrated Bag	5.95	487	17224	1.14	.52	6.21×10^{-5}
	Continuous Monitor[b]	5.44	487	17224	1.05	.48	5.72×10^{-5}
	Continuous Monitor[c]	60.4	487	17224	11.60	5.27	6.32×10^{-4}
	Total[d]	---	---	---	12.65	5.75	6.89×10^{-4}
	Silica Gel Tube	28.53	487	17224	5.48	2.49	2.98×10^{-4}
CRX	Wet Impingement	44.6	767	27096	13.5	6.14	7.35×10^{-4}
	Integrated Bag	11.93	767	27096	3.61	1.65	1.97×10^{-4}
	Continuous Monitor[a]	14.7	767	27096	4.45	2.02	2.42×10^{-4}
	Silica Gel Tube	36.26	767	27096	10.98	4.99	5.98×10^{-4}
SSX	Wet Impingement	238	12.8	453	1.20	.55	2.89×10^{-4}
	Integrated Bag	3.60	12.8	453	.02	.008	4.82×10^{-6}
	Continuous Monitor[a]	14.7	12.8	453	.07	.03	1.78×10^{-5}
	Continuous Monitor[b]	541	12.8	453	2.73	1.24	6.59×10^{-4}
	Total[d]	---	---	---	2.80	1.27	6.77×10^{-4}
	Silica Gel Tube	788	12.8	453	3.98	1.81	9.59×10^{-4}
	Condensate return water	1.6×10^{1} mg/mℓ	---	---	2.13	.97	5.13×10^{-4}
DMFX	Wet Impingement	170	29.5	1043	1.98	.90	4.78×10^{-4}
	Integrated Bag	4.03	29.5	1043	.05	.02	1.20×10^{-5}
	Continuous Monitor[a]	12.9	29.5	1043	.15	.07	3.61×10^{-5}
	Continuous Monitor[b]	238	29.5	1043	2.77	1.26	6.68×10^{-4}
	Total[d]	---	---	---	2.92	1.33	7.04×10^{-4}
	Silica Gel Tube	121	29.5	1043	1.41	.64	3.40×10^{-4}
DRX	Wet Impingement	598	276	9771	65.26	29.66	1.57×10^{-2}
	Integrated Bag	8.90	276	9771	.97	.44	2.37×10^{-4}
	Continuous Monitor[a]	3.98	276	9771	.43	.20	1.04×10^{-4}
	Continuous Monitor[b]	1265	276	9771	137.8	67.6	3.32×10^{-2}
	Total[d]	---	---	---	138.23	67.8	3.33×10^{-2}
	Silica Gel Tube	388	276	9771	42.34	19.25	1.02×10^{-2}

[a]Loss sample due to freezing.

[b]Gaseous phase seen at FID.

[c]Condensate liquid by HPLC analysis.

[d]Total is gaseous and condensate of continuous monitoring system.

TABLE 2.1 - SUMMARY OF RESULTS BY TEST LOCATION - DUPONT (MAY PLANT) CAMDEN, S.C.
(Continued)

LOCATION	METHOD	CONCENTRATION (PPMV as DMF)	VOLUMETRIC FLOWRATE (DSCMM)	VOLUMETRIC FLOWRATE (DSCFM)	EMISSION RATES (lb DMF)/hr	EMISSION RATES (kg DMF)/hr	EMISSION RATES (lb DMF)/lb product
SCI	Wet Impingement	600.2	335	11830	79.4	36.1	5.06×10^{-3}
	Integrated Bag	123.15	335	11830	16.3	7.40	1.04×10^{-3}
	Continuous Monitor[a]	138.3	335	11830	18.29	8.31	1.16×10^{-3}
	Continuous Monitor[b]	8073	335	11830	1067	49.5	6.80×10^{-2}
	Total	---	---	---	1085.29	493.3	6.91×10^{-2}
	Silica Gel Tube	4753	335	11830	628	286	4.00×10^{-2}
SCX	Wet Impingement	2.77	337	11899	0.37	0.17	2.36×10^{-5}
	Integrated Bag	6.93	337	11899	0.92	0.42	5.86×10^{-5}
	Continuous Monitor[a]	7.81	337	11899	1.04	.47	6.62×10^{-5}
	Continuous Monitor[b]	6.5	337	11899	.86	.39	5.50×10^{-5}
	Total	---	---	---	1.9	.86	1.21×10^{-4}
	Silica Gel Tube	<.01	337	11899	---	---	---
PSX	Wet Impingement	481	135	4761	25.63	11.65	1.63×10^{-3}
	Integrated Bag	120.6	135	4761	6.43	2.92	4.09×10^{-4}
	Continuous Monitor[a]	9.22[c]	135	4761	.49	.22	3.12×10^{-5}
	Continuous Monitor[b]	1011	135	4761	53.87	24.49	3.43×10^{-3}
	Total	---	---	---	54.36	24.71	3.46×10^{-3}
	Silica Gel Tube	351	135	4761	18.70	8.50	1.19×10^{-3}
WSX	Wet Impingement	N.D.[d]	129	4545	N.D.	N.D.	N.D.
	Integrated Bag	20.05	129	4545	1.02	.46	N.D.
	Continuous Monitor[a]	9.16[d]	129	4545	.47	.21	N.D.
	Total	---	---	---	N.D.	N.D.	N.D.
	Silica Gel Tube	N.D.	129	4545	N.D.	N.D.	N.D.

[a]Gaseous phase seen at FID.

[b]Condensate liquid by HPLC analysis.

[c]Total is gaseous and condensate of continuous monitoring system.

[d]Not determined.

location is required. In general, the integrated bag method results may be disregarded at all of the test locations at the DuPont (May Plant) because of sample collection problems. More precisely, the integrated bag collected the sample into two phases, a liquid phase and a gas phase. This was due to condensation in the bag. The analysis of the collected sample by GC/FID accounted for only the gaseous component of the sample. Due to the high solubility of the dimethyl formamide (DMF) in water, any condensate collected had the effect of scrubbing the solvent (DMF) from the gaseous phase. The liquid phase (the condensate) remained in the bag adhering to the bag walls as droplets. Therefore, the condensate was not injected into the gas chromatograph, and consequently the analytical results are considered to be low and invalid.

2.2.1 WDX

At the WDX test location, the test results showed low moisture (2.8%), ambient temperature (85°F) and low solvent concentration. Four sampling and analytical methods were utilized at this test location (see Table 2.1 for results). No analytical results were determined for the wet impingement method, at this location, due to sample preservation problems, which precluded any analysis and as previously mentioned the GC/FID data was invalid.

The average range of the two remaining methods was 9.06 lb/hr with a range of 5.48 lb/hr to 12.6 lb/hr. The wet impingement method (which was lacking) may have validated and confirmed the other two methods. The operating conditions encountered: low moisture, low concentration and ambient temperature allow, in TRW's opinion, for the application of all proposed test methods. The continuous monitoring data was collected over three days while the silica gel tube was only collected for a one-hour period. See Appendix A for complete results.

2.2.2 CRX

The CRX test location was similar to the WDX test location in operating conditions. These operating conditions were low moisture (3.9%), low concentration and ambient temperature (80°F). All four sampling and analytical methods were implemented (see Table 2.1).

The integrated bag method should be disregarded according to the previously discussed rationale.

The continuous monitor method may be disregarded due to a negligible condensate fraction sample size. The liquid fraction collected in the sample line and condensate jar prior to the flame ionization analyzer was judged to be negligible at this location in the field and was not collected. However, because of the solubility of the solvent in H_2O, the contribution to the total solvent collection of the continuous monitor system may have been significant. Without an analysis of the condensate and rinse, the results of the continuous monitor system should be suspect. They represent only the gaseous phase as the integrated bag does.

The comparison between the wet impingement and NIOSH-silica gel tube method was favorable. The average emission rate determined from the two methods ranged from 0.98 lb/hr to 13.5 lb/hr. On the bassis of limited data collected in the field, either method, the wet impingement and/or the silica gel tube can be considered equally valid.

2.2.3 SSX

The operating conditions encountered at the SSX test location posed both sampling and analytical problems. The operating conditions present were high moisture (17% saturation @135°F), suspected high concentration and temperatures in the 125-150°F range. The liquid-gas phase problem was heightened by the saturated stack conditions.

The integrated bag method can be disregarded by the previously indicated rationale. The average emission rate for the test location based upon the three other methods was 2.64 lb/hr, with a range from 1.20 to 3.98 lb/hr. The three test methods yield results within the same range, but recommendation of one method over another would be tenuous at this time.

The saturated moisture conditions and the stack configuration lead to the sampling difficulty of entrained moisture. The conditions were such that the water vapor would condense within the stack forming water droplets (see Figure 4.3). The orientation of the sample line/sample probe within the stack during sampling would consequently bias the amount of solvent collected given the high solubility of DMF. Evidence indicates that entrained moisture was, in fact, encountered. During the second moisture train sampling run, moisture in excess of saturation was collected (Run #SSX-WI-2; see Appendix B).

Assuming entrained moisture was encountered with all the methods tested, the wet impingement train would appear to be the best alternative since the sampling media is water. The results from the SSX test location by wet impingement are lower than the other two methods. If the condensate return water results are added to the wet impingement results, the resultant value is roughly equivalent to the average of the continuous monitor and silica gel tube methods. This may indicate that entrained moisture was not a problem with the wet impingement method.

2.2.4 DMFX

The operating conditions during the testing at the DMFX location were low moisture (4.1%), moderate temperature (110°), and moderate concentrations.

The integrated bag method can be disregarded according to the previously discussed rationale.

The continuous monitor method yielded a slightly higher emission rate than either the wet impingement or silica gel tube method. The average emission rate for the three methods was 2.1 lbs/hr with a range from 1.41 lbs/hr to 2.92 lbs/hr.

All three sampling and analytical methods compared favorably based on the limited amount of field data.

2.2.5 DRX

The operating conditions during testing at DRX location were high moisture (15.4%), high concentration and high temperature (144°F). No sampling problems were encountered due to entrained moisture because the moisture content of the stack gas was below the saturation point at a stack temperature of approximately 144°F.

The integrated bag method can be disregarded according to the previously discussed rationale.

The wet impingement and silica gel tube methods compare favorably. Their calculated emission rates average 53 lbs/hr with a range of 42.3 lbs/hr for the silica gel tube method and 65.3 lbs/hr for the wet impingement method.

The continuous monitor method yielded a considerably higher emission rate. The calculated emission rate was 138 lbs/hr of solvent as determined by the continuous monitor method. This value appears to be biased high.

The emission rate in terms of pounds of solvent per pound of product (fiber), 3.32 10^{-2} was greater than the loss incured in this portion of the process calculated from the plant supplied process data of residual solvent content in the product (fiber). Assuming that the only avenue for solvent to escape are air and water emissions, the air emission rate should not have exceeded 1.3 x 10^{-2} lbs of solvent per pound of product (fiber) produced. This rationale assumes that the plant analytical method used to measure the residual solvent content was valid and the fiber used for analysis was representative.

2.2.6 SCI

The operating conditions during sampling at the SCI test location were low moisture (3.3%), moderate temperature and high concentration. The high concentration coupled with the sample location proved to be difficult to adequately assess the data from the various methods.

The integrated bag method can be disregarded according to the previously mentioned rationale.

The other three methods showed a range from 79.4 lbs/hr for the wet impingement method to 1,085 lbs/hr for the combined results of continuous monitor method. The average rate for the three methods was 597 lbs/hr. This range was judged to be excessive and based upon the limited amount of data points, selection of one method over another is not possible at this time.

A possible rationale for the disparity of results, is the sample location. It is the opinion of TRW that the sample location selected was possibly unrepresentative of inlet flue gas. The sample was taken from a condensate relief valve at a dead end header. It was supposed that the pressure would be sufficient to gain continuous flow without interferring condensation. However, due to the low flow through the system condensate was present at the port. A small amount of condensate would greatly influence (bias) the sampling and analytical results. Secondly, the port configuration (see Figure 4.6) may have biased one method over another during the simultaneous methods testing. That method which was aligned with the downward facing leg of the union was observed to collect a substantially greater amount of condensate. Because of the high solvent concentration of condensate at this location,

the orientation of the sample train in relation to the sample port would have biased one method high. The orientations of the sample trains during the comparative test run were not recorded. Because of the wide variation in emission results by the various analytical methods for this sample location, the plant attempted to verify the solvent mass balance data collected during the test period in order to determine an inlet concentration. This data has been included in the ESED confidential files and has been evaluated separately.

2.2.7 SCX

The operating conditions at the SCX test location were low moisture (2.8%), moderate temperature, and low concentration. The integrated bag method can be disregarded according to the previously mentioned rationale.

The silica ge tube method showed less than .1 ppm DMF.

The other two methods, the continuous monitor method and the wet impingement method, averaged 1.14 lbs/hr. The range was .37 lbs/hr for the wet impingement method to 1.9 lbs/hr for the continuous monitoring method.

All the methods utilized at this location resulted in lower than expected emission rates. The expected solvent concentration according to plant supplied information was approximately 20 ppmv.[1] All methods performed during the sampling period were lower than this value. The sampling system may have lead to a result biased low. The sample for all four methods was extracted from the stack through a 8-foot length of stainless steel piping connected to 75 feet of heat traced teflon sampling line (see Figure 4.6). The possibility existed that the solvent condensed in the stainless steel pipe before entering the heat traced line. Due to problems of access, this situation could not be confirmed or rejected.

2.2.8 PSX

The operating conditions during the testing at PSX test location were low moisture (2.4%), ambient temperature (85°F) and moderate solvent concentration.

---

[1]Plant supplied data. Appendix D.

The integrated bag method results can be disregarded according to the previously mentioned rationale.

The average emission rate for the other three methods was 41.2 lbs/hr with a range between methods from 18.7 lbs/hr to 53.9 lbs/hr.

The wet impingement method and the silica gel methods were comparable based upon the one sampling run performed. The continuous monitor method reported higher results than either the wet impingement or silica gel tube method. These results may be biased high due to the estimated condensate collection time and estimated condensate sample volumes. In addition, the condensate reported as collected at the PSX test location includes condensate collected at WSX test location and condensate collected during extensive instrument (FID) line-out. Due to the proximity of results for the silica gel tube method and the wet impingement method and suspect operation of the continuous monitor at this location, an estimated emission rate of 22.2 lbs/hr is the best approximation.

2.2.9 WSX

The operating conditions at the WSX test location were low moisture (1.2%), ambient temperature (85°F) and suspected low solvent concentration.

All the samples at this location were not collected, as this test location was intended to be sampled on a "grab basis," time permitting. Consequently, only the continuous monitor method and the integrated bag method were utilized. The results listed in Table 2.1 are very limited and should not be considered representative of the process because sufficient testing and process data is lacking.

2.3 PRESENCE OF ACRYLONITRILE (AN)

The presence of acrylonitrile was determined by gas chromatograph analysis in the field. In general no acrylonitrile was found to be present. The only exception to this was at the inlet to the recovery unit. At this location, peaks were determined to be acrylonitrile and quantified in the 0.5 to 1.5 ppm range. This result confirms expectation that if AN were present, it would occur at the location with the highest DMF concentrations and then only in low amounts (for complete results, see Appendix C.1 - Field Chromatograms #276-278).

2.4 MASS BALANCE CONSIDERATIONS

In general, the exhaust gas streams were low in concentration. It is suspected that due to the solubility of DMF in water, the mass emission rate attributable to the water portion of the process streams was equal to or greater than the gaseous portion of the process exhaust stream. The concentration of DMF in the process water streams, recovered or exhausted, was measured routinely by plant personnel at several points.

The routine plant analysis of liquid process streams was not duplicated by TRW. The historical accumulation of plant water analysis data was deemed sufficient for purposes of the study and was considered to be more representative than are grab samples that could have been collected during the field test study. If a mass balance of solvent is desired, the historical plant data of solvent concentration of the process water feed and exhaust streams, and the gaseous exhaust streams (measured by TRW during the field test) should be sufficient to approximate an adequate mass balance around the acrylic fiber spinning operation.

3.0 PROCESS DESCRIPTION AND OPERATION

The DuPont May Plant utilized the dry spinning method to produce acrylic fiber. The suspension polymerization technique was used to produce polyacrylonitrile used to dry spin acrylic fiber. The solvent used to spin the fiber was dimethyl formamide (DMF). The exhaust gas streams sampled were in the fiber spinning and fiber treating sections of the production process.

A generalized flow diagram is outlined in Figure 3.1. Test locations are indicated by their respective codes and approximate locations along the fiber processing line.

A more complete diagram of the dry spinning process may be found in the Source Category Survey Report, Phase I NSPS, February 14, 1980, prepared by Pacific Environmental Services (PES).

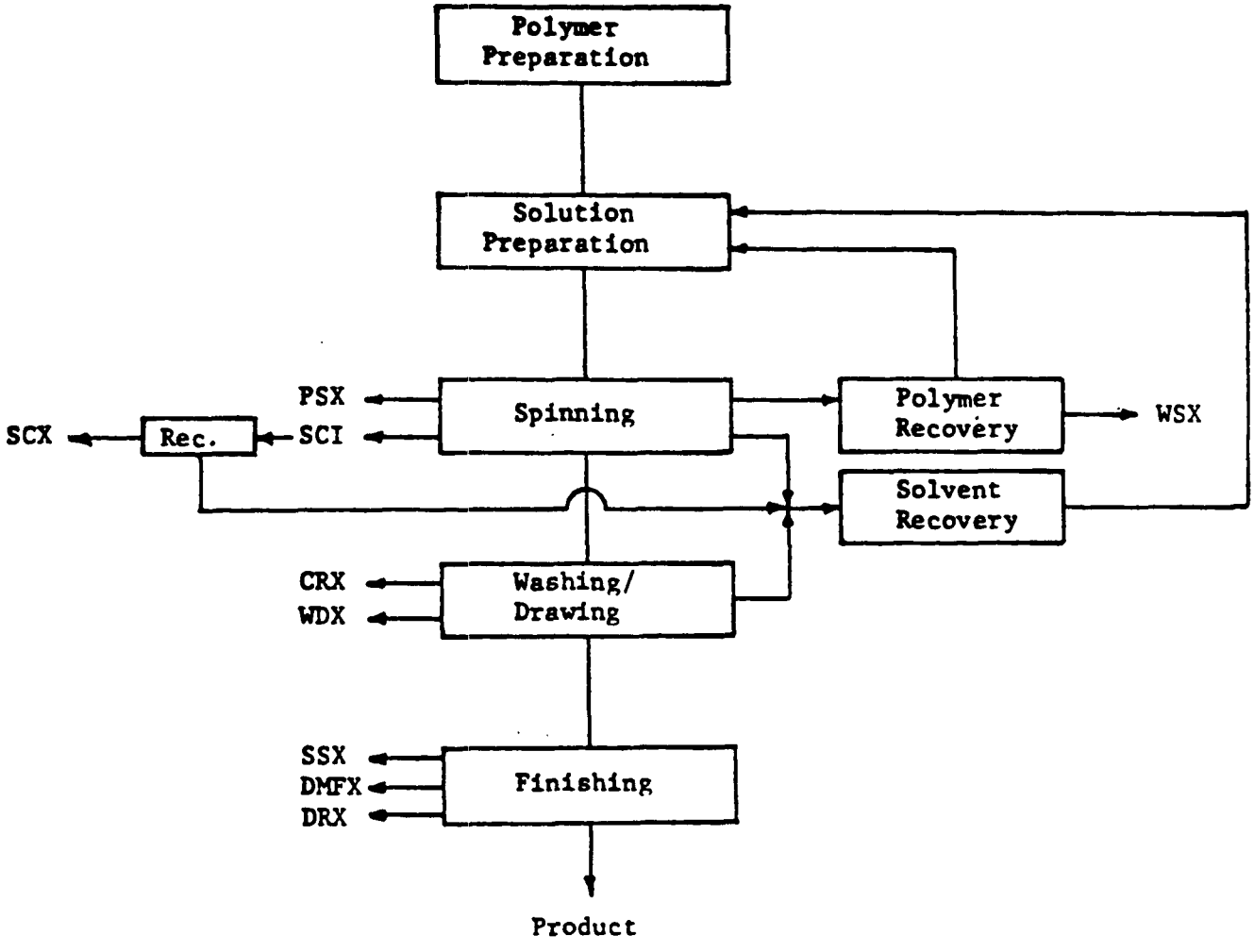

Figure 3.1 General Process Flow Diagram.

4.0 TEST LOCATIONS

This section discusses the physical arrangement of the various test locations that were sampled during the solvent emission study at DuPont. A generalized schematic of each test location is provided as reference. Pertinent information bearing on the reliability of the test data as collected is provided.

4.1 WDX

The WDX test location was located on the rooftop of the main fiber spinning building. The exhaust serving this test location measured 32 inches by 32 inches. Five holes for test ports were drilled into the duct by plant personnel to accommodate an S-type pitot tube for flue gas velocity measurement and volumetric flowrate determination. A 5 x 4 sampling matrix was laid out for the velocity measurement according to Federal Register specifications - EPA Method 1. The test ports were located four equivalent diameters (D_e) upstream from the nearest flow disturbance. A single hole located 12 inches below those ports used for the velocity traverse was used for the continuous monitor sample line. The gas samples taken for method comparison were withdrawn from the stack at the point of average velocity through tubing temporarily mounted on the stack. Approximately 50 feet of unheated 1/4" tubing connected the test location to the continuous monitor station (Figure 4.1).

4.2 CRX

The CRX test location was located on the rooftop of main fiber spinning building. The exhaust duct from this process measured 42 inches by 58 inches. Five holes for test ports were drilled into the duct by plant personnel to accommodate an S-type pitot tube for flue gas velocity measurement and volumetric flowrate determination. A 5 x 5 sampling

Traverse Points

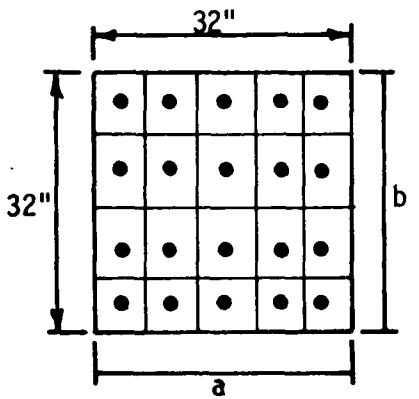

Point	Distance(a), in.	Distance(b), in.
1	3.2	4.0
2	9.6	12.0
3	16.0	20.0
4	22.4	28.0
5	28.8	-

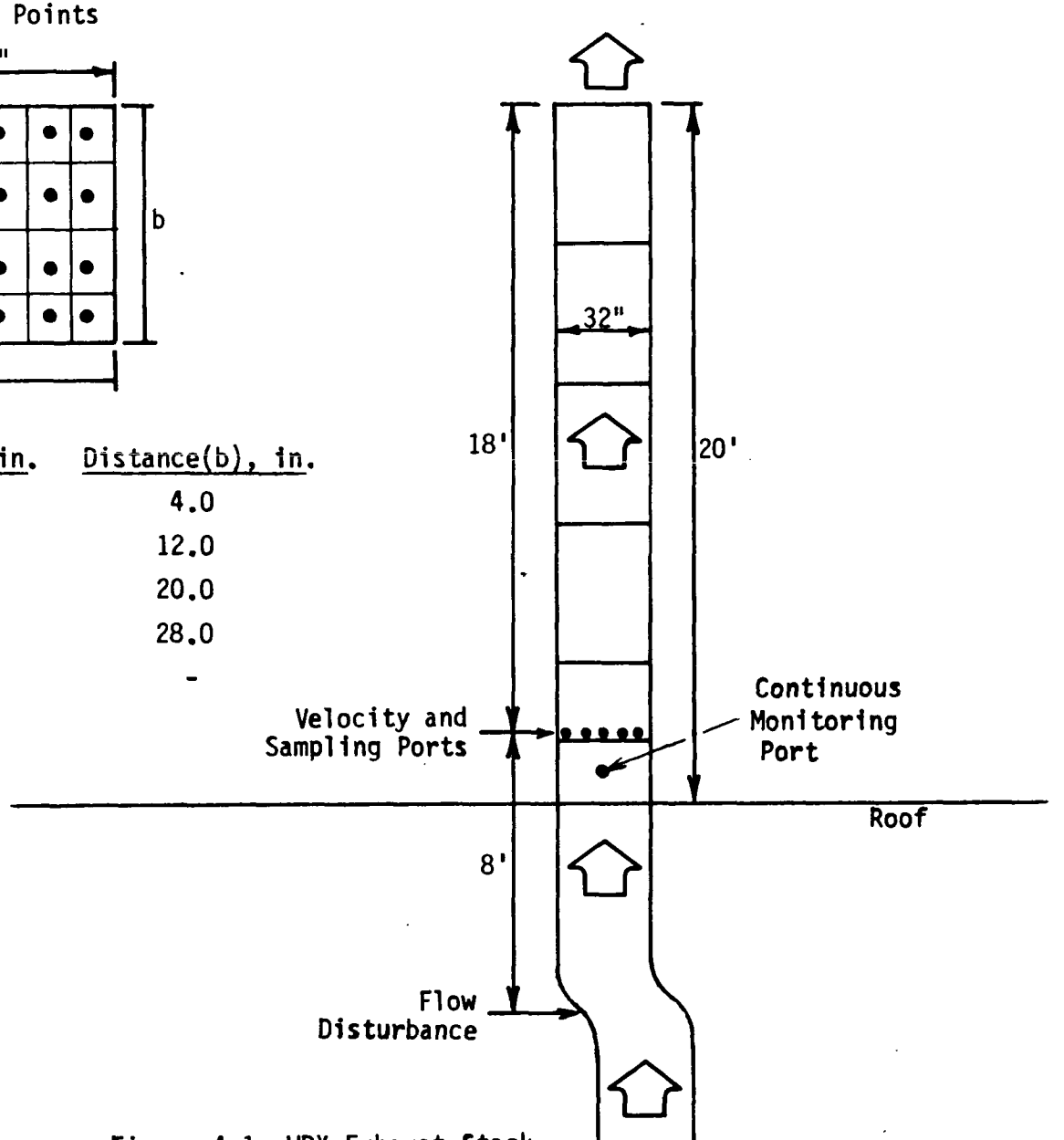

Figure 4.1 WDX Exhaust Stack.

matrix was laid out for velocity measurement according to Federal Register specification - EPA Method 1. The test ports were located two equivalent diameters (D_e) from the nearest downstream flow disturbance. One of these five ports was used for the comparative methods testing. An attempt was made to locate the sampling probe line at the point of average velocity for each of the test methods utilized. Ports not in use were closed with duct tape to prevent dilution of the exhaust gas stream. Approximately 50 feet of unheated 1/4" tubing connected the test location to continuous monitor station (Figure 4.2).

4.3 SSX

The SSX test location was located on the rooftop of the fiber finishing building. The two test ports were located 15 inches downstream from he nearest flow disturbance on a straight run of circular duct. The test ports were located 90° apart from each other. Six points were measured on each of two velocity traverses according to Federal Register - EPA Method 1 specifications. All samples were withdrawn from either of the two sample ports through 1/4 inch sampling line. The sample for continuous monitor station was drawn through a series of four standard size impingers and approximately 35 feet of unheated sample line. The SSX exhaust duct was capped with an inverted cone which served to knock out moisture from the exiting flue gas. A rim around the top of the duct collected the condensed moisture, which was then routed into a return line on the outside of stack. The return line lead to the process sewer (Figure 4.3).

4.4 DMFX

The DMFX test location was located on the rooftop of the fiber finishing building. The exhaust duct was 102 inches in height and 10 inches x 12 inches in width. A 4 x 3 sampling matrix was used for the velocity measurement and volumetric flowrate determination according to Federal Register - EPA Method 1 specifications.

The four ports used for velocity measurement were located two equivalent diameters (D_e) downstream and six equivalent diameters (D_e) upstream from the nearest flow disturbances. All samples were collected from one of these four velocity ports. The continuous monitor station

Traverse Points

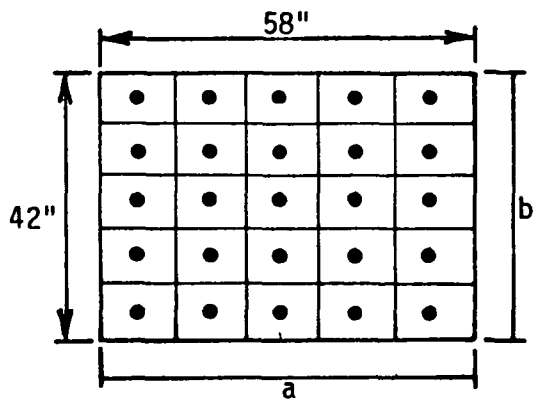

Point	Distance(a), in.	Distance(b), in.
1	5.8	4.2
2	17.2	12.6
3	28.8	21.0
4	40.2	29.4
5	51.8	37.8

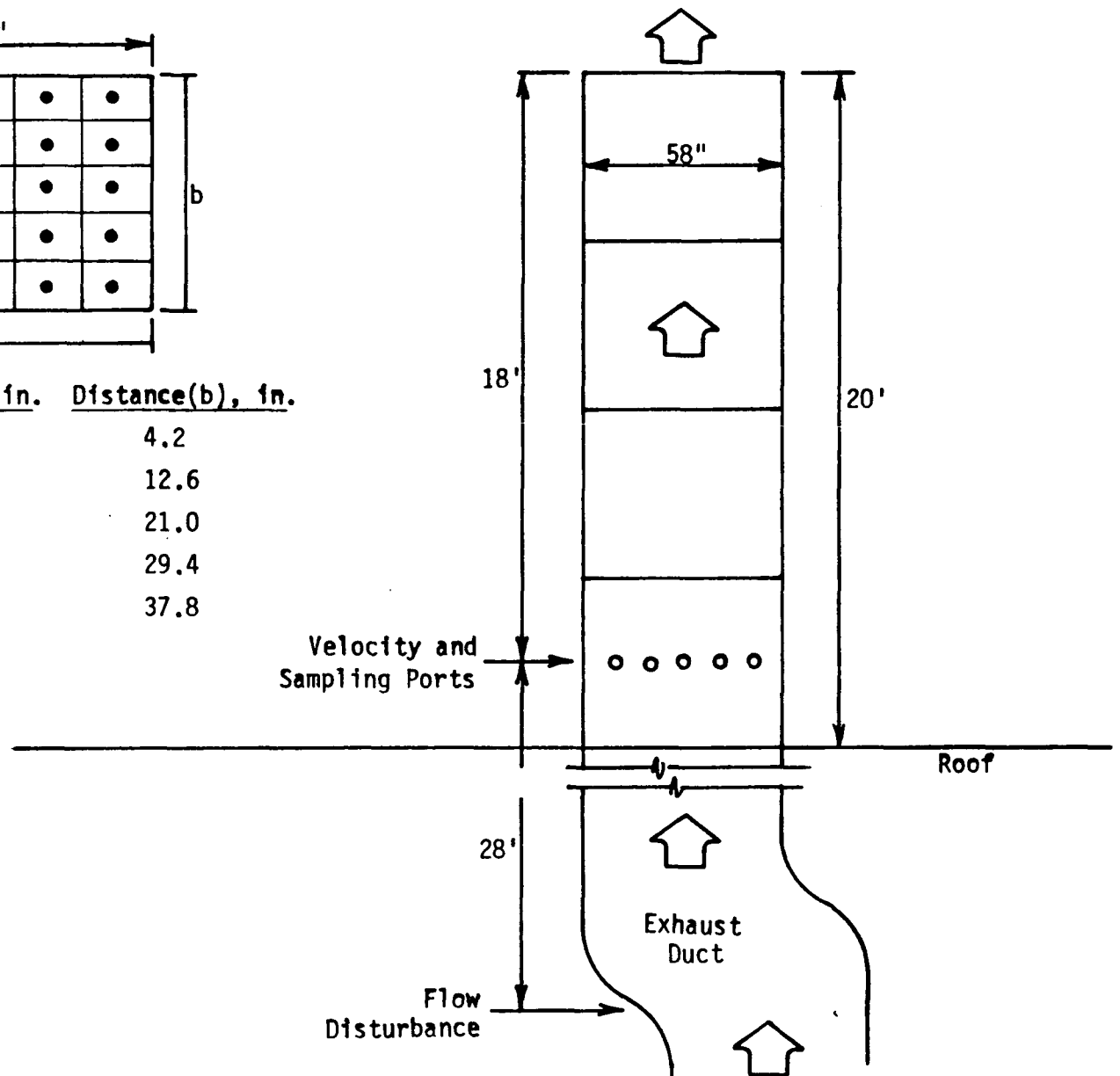

Figure 4.2 CRX Exhaust Stack.

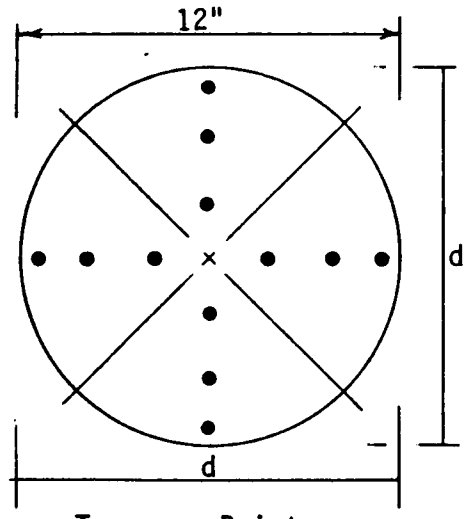

Traverse Points

Point	Distance(d), in.
1	0.5
2	1.75
3	3.5
4	8.5
5	10.25
6	11.5

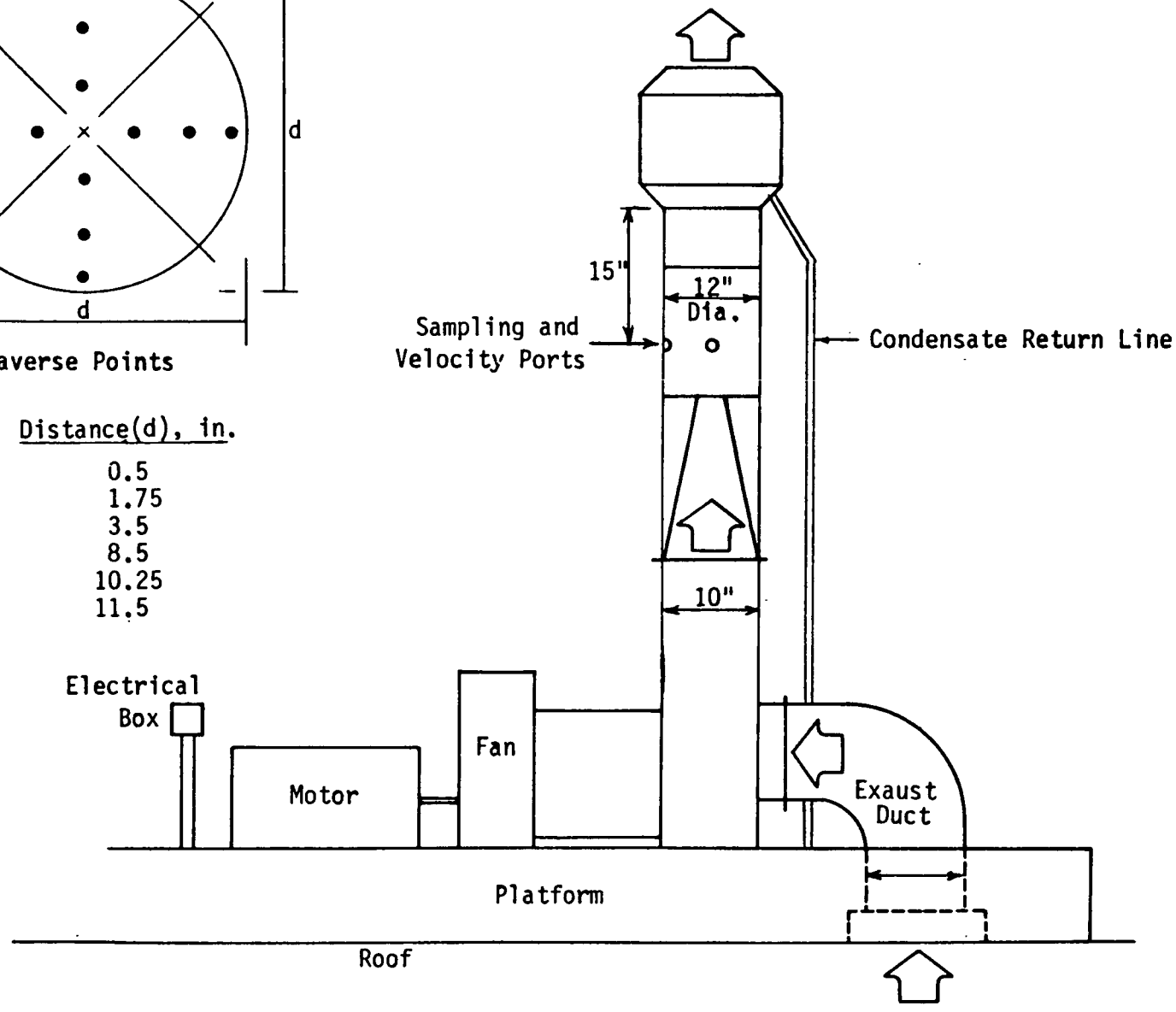

Figure 4.3 SSX Exhaust Stack.

was connected to the DMFX exhaust through approximately 30 feet of 1/4" tubing. A condenser was used in line to collect condensate prior to and after the continuous monitor pump (Figure 4.4).

4.5 DRX

The DRX test location was located on the rooftop of the fiber finishing building. The stack extended 16 feet above rooftop level. The stack was constructed out of stainless steel and was equipped with orifices to measure volumetric flowrate on either side of a venturi. The pressure sensed by the installed orifices was transmitted through a differential pressure cell (D_p) to the control room. The volumetric flowrate was recorded continually on a stripchart in the control room. The volumetric flowrate recorded by plant equipment was deemed sufficient for purposes of the study and therefore no manual velocity measurements were conducted at this location by TRW personnel. The flowrates reported by the plant were corrcted for moisture to a dry basis for this report. A copy of the stripchart measuring volumetric flowrate is included in Appendix D which is maintained in ESED confidential files.

The four ports used for moisture determination and solvent sampling were located mideway around the stack on four adjoining sides of the duct. These ports were two equivalent diameters (D_e) from the nearest downstream flow disturbance. The appropriate sample lines were connected to the stack with brass or stainless steel fittings. No probe was extending into the stack. Each of the four comparative methods were run simultaneously, but out of different ports located around the perimeter of the stack. The continuous monitor station was connected to the DRX exhaust stack through approximately 50 feet of 1/4" Teflon® tubing (Figure 4.5).

4.6 SCI

The SCI test location was located beneath the recovery unit platform. Samples were extracted from the condensate relief drain valve, located at the end of the 24 inch header main, leading to the base of the recovery unit. The relief valve was outfitted with a stainless steel four way union fitting which served as a manifold for the simultaneous solvent sampling. The port was under positive pressure. A condenser was used on line to collect condensate between the sample port and the continuous

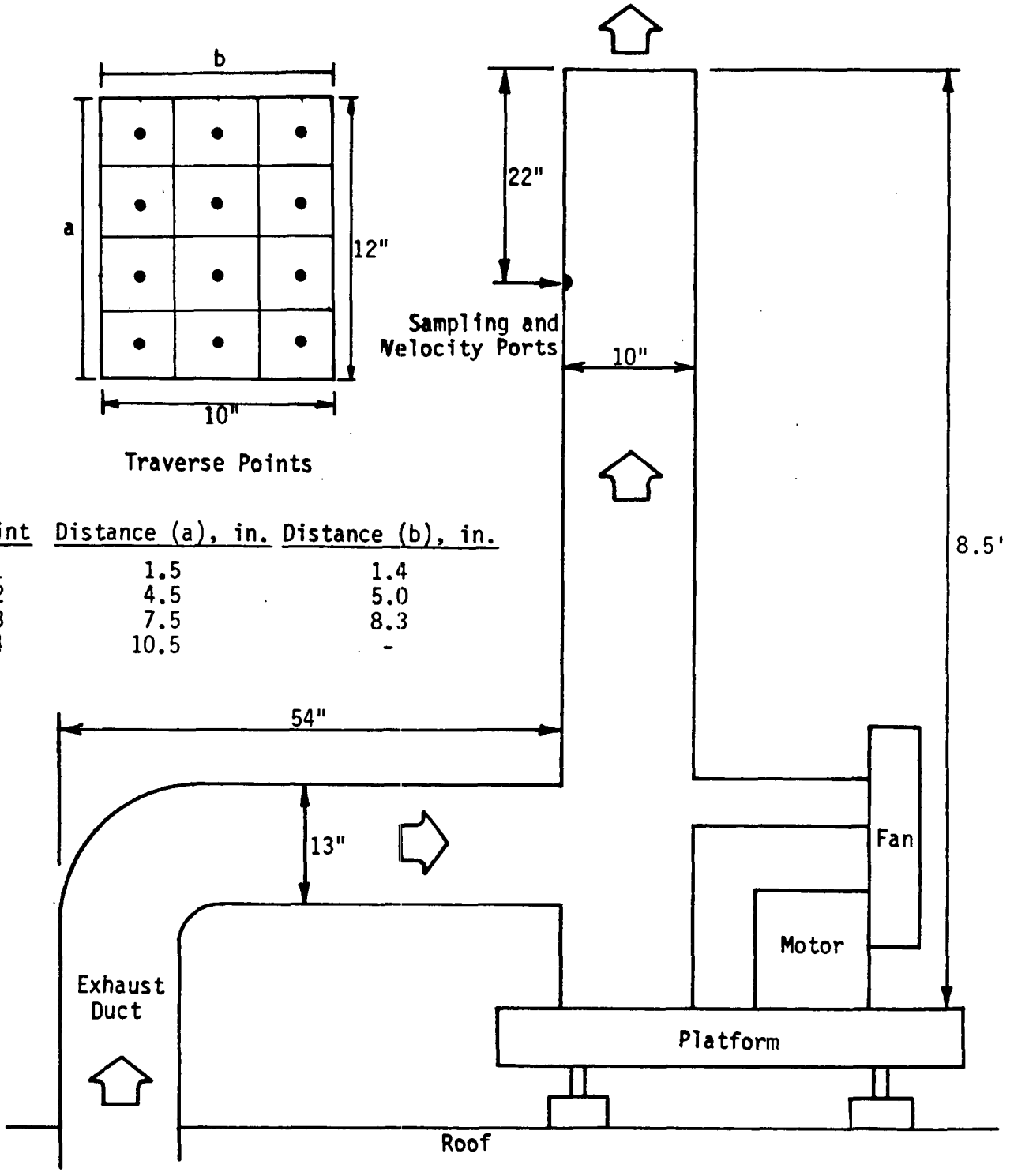

Point	Distance (a), in.	Distance (b), in.
1	1.5	1.4
2	4.5	5.0
3	7.5	8.3
4	10.5	-

Figure 4.4 DMF Exhaust Stack.

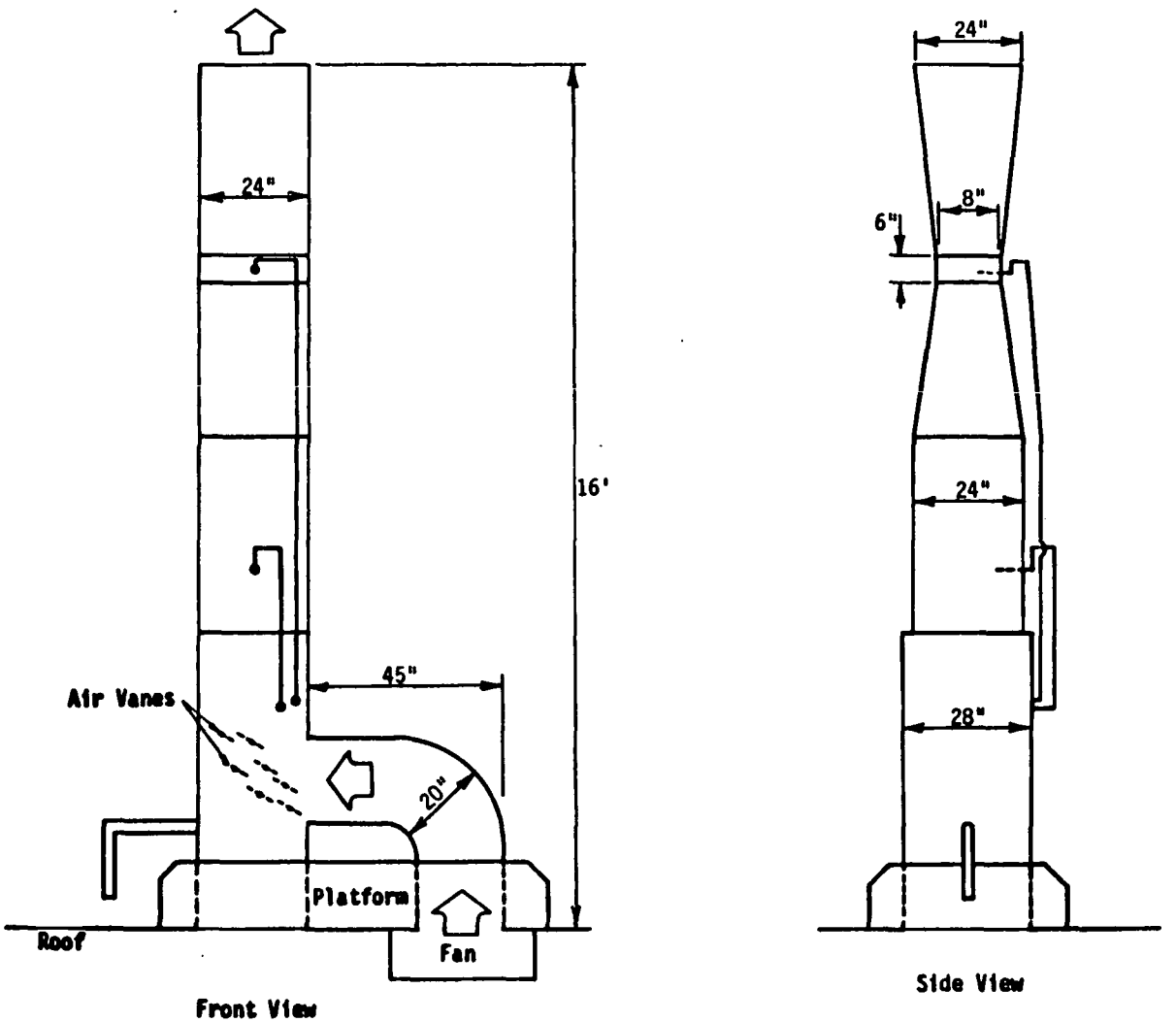

Figure 4.5 DRX Exhaust Stack.

monitor station. The continuous monitor station was connected to the sample port through approximately 25 feet of tubing (Figure 4.6). Volumetric flowrate was determined by plant monitors and recorded on a circular stripchart recorder. Copies of the stripcharts are in Appendix D which is maintained in ESED confidential files. The plant reported volumetric flowrates were corrected for moisture, to a dry basis for this report. The location of the pressure measuring devices used to calculate the volumetric flowrate were less than optimum (see Figure 4.6). The accuracy of the plant supplied volumetric flowrate was not determined. The reported volumetric flowrate was in the normal range and was comparable to historical operational data.

4.7 SCX

The SCX test location was located at the base of the recovery unit platform. Gas samples were extracted from the SCX exhaust stack at approximately the 75 foot level of the unit through an eight-foot section of stainless steel piping. The host plant installed a valve and tee assembly so that a heated sample line could be connected closer to the source than the previously used sampling system had allowed. Direct access to the stack was not available as no platform existed on the tower. The heated sample line was anticipated to be sufficient for the collection of a representative gas sample. The eight-foot section of uninsulated pipe connecting the stack and the heated sample line was a possible depository for condensation. Tests to judge the adequacy of the sample handling system were not possible and the heated sample line as used was the most practical means of conducting the gas sample to the continuous monitor station.

All samples (moisture and solvent concentration tests) were collected from the exit of the heated sample line at a stainless steel four-way union fitting, which was used as a sampling manifold. A condenser was installed in line after the sampling manifold and before the continuous monitor pump to collect accumulated condensation.

4.8 PSX AND WSX

The PSX and WSX test locations were located on the rooftop of the main fiber production building. The PSX and WSX exhaust streams merged into a common stack before exiting to the atmosphere through a 45-foot

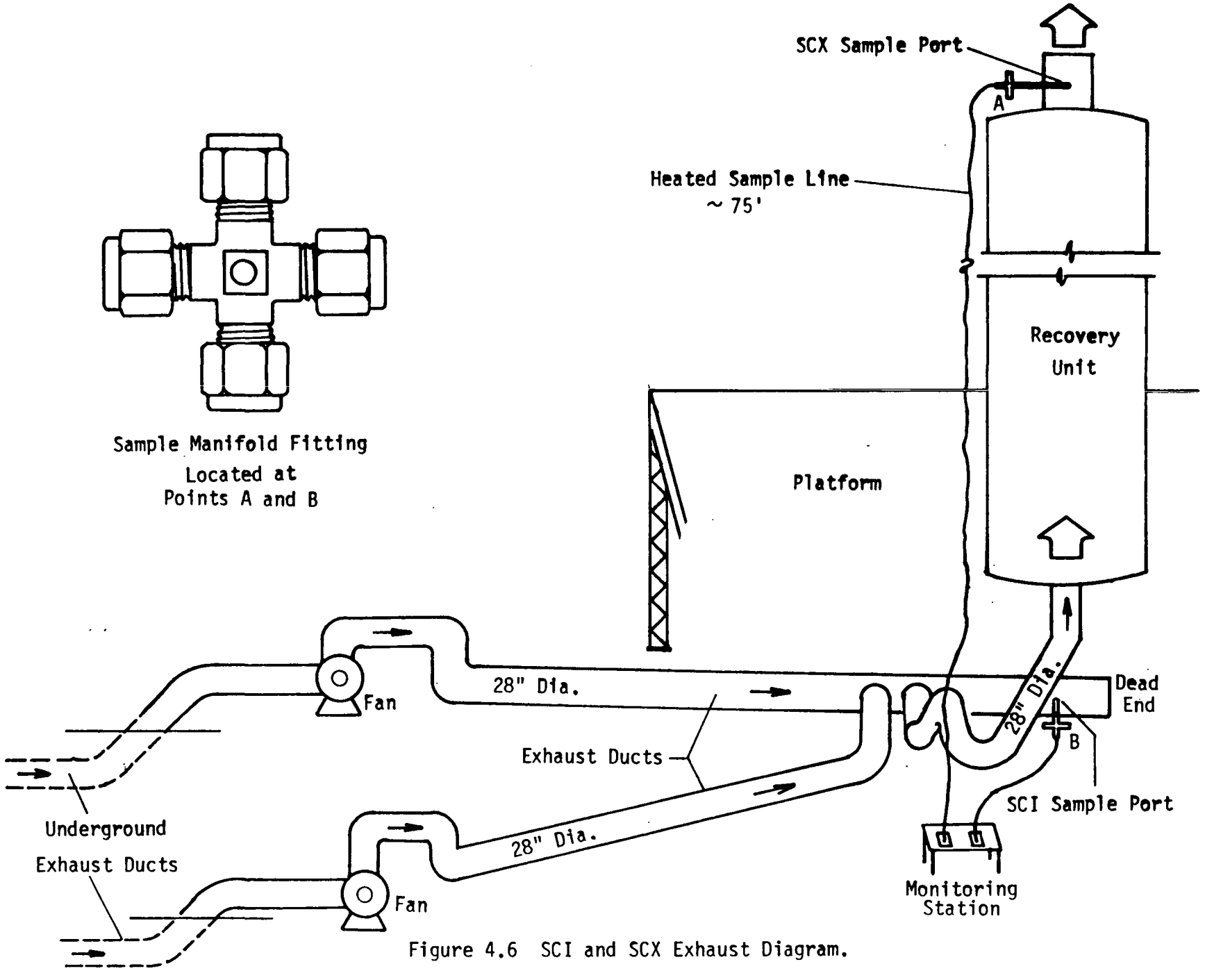

Figure 4.6 SCI and SCX Exhaust Diagram.

tall stack. Each exhaust stream was sampled prior to entering the common exhaust stack. The WSX test location was of secondary importance to the emissions study and was sampled on a time available basis. Therefore, comparative testing and extensive continuous monitoring was not performed. Accurate flowrates were determined.

The sample ports for the PSX test location were in a 13 foot run of straight duct, measuring 24 inches wide by 28 inches deep. The ports were located 5.6 equivalent diameters (D_e) downstream from the nearest flow disturbance and 4.6 equivalent diameters upstream from the nearest flow disturbance. A 5 x 5 sample point matrix was used for flue gas velocity measurement and volumetric flowrate determination. The same ports were used for solvent concentration measurements (Figure 4.7).

The sample ports for the WSX test location were located in a 30-foot straight run of circular overhead duct work measuring 24 inches in diameter. Two sample ports oriented 90° apart from each other were located 10 equivalent diameters (D_e) downstream from the nearest flow disturbance and 2.5 equivalent diameters (D_e) from the nearest upstream flow disturbance. A six point velocity traverse was utilized at each WSX port according to Federal Reigster - EPA Method 1 specifications for velocity measurement and voplumetric flowrate determination. Integrated bag samples and moisture train measurements were withdrawn from the exhaust stream through the same ports (Figure 4.7).

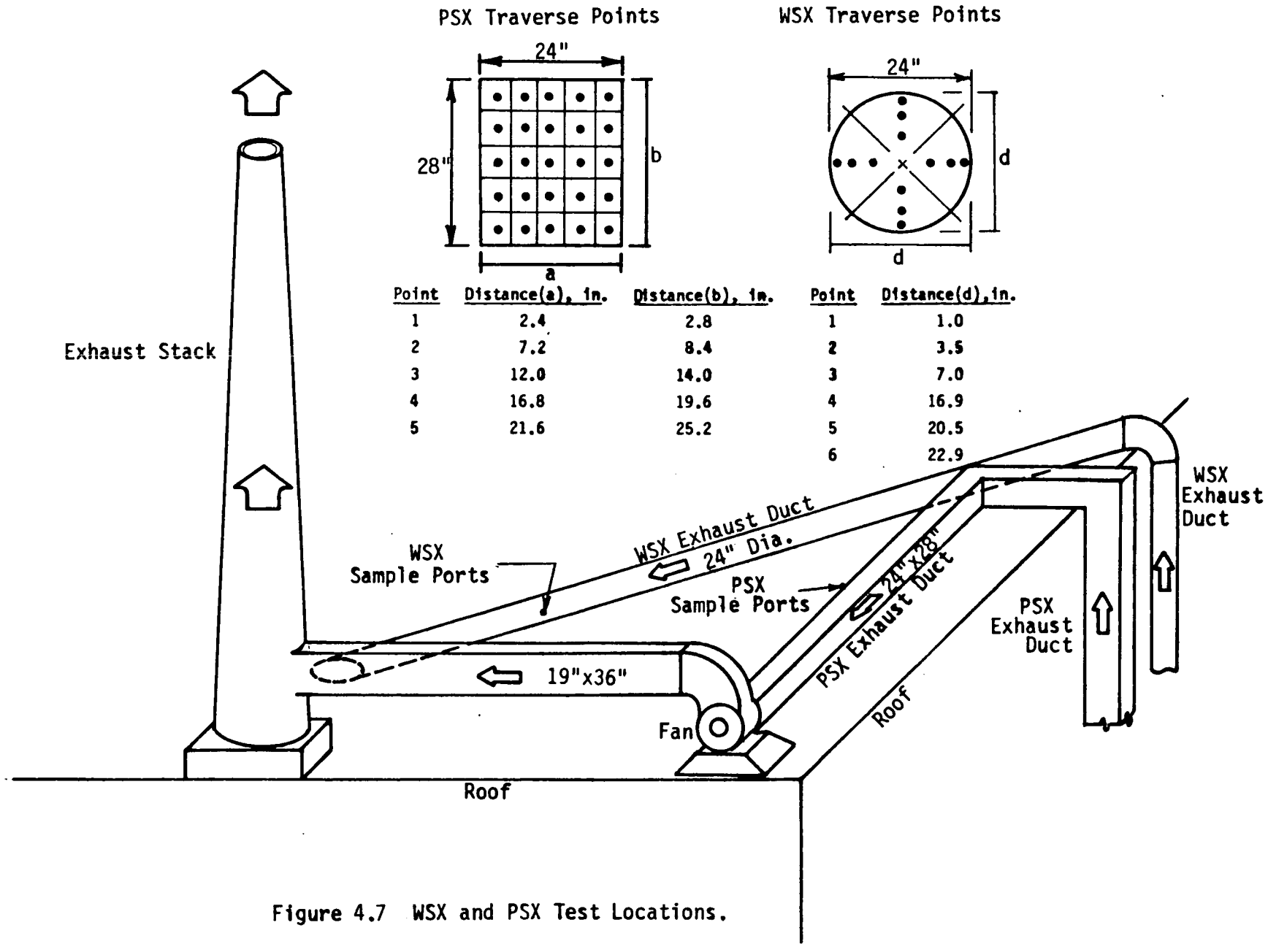

Point	Distance(a), in.	Distance(b), in.
1	2.4	2.8
2	7.2	8.4
3	12.0	14.0
4	16.8	19.6
5	21.6	25.2

Point	Distance(d), in.
1	1.0
2	3.5
3	7.0
4	16.9
5	20.5
6	22.9

Figure 4.7 WSX and PSX Test Locations.

5.0 SAMPLING AND ANALYTICAL PROCEDURES

This section will discuss the sampling and analytical procedures utilized in the field and the laboratory under Task 1, Project 80-SNF-1 source test at DuPont May Plant, Camden, South Carolina. Sampling methods and analytical procedures will be discussed separately.

5.1 SAMPLING

A total of six field sampling methods were performed in the field during the DuPont May Plant source test. Several of the sampling methods were implemented according to standard procedures, hence only a brief discussion will be included herein. A few other sampling methods were modifications of standard methods, unique to this field test and consequently will be discussed in more elaborate detail.

5.1.1 Velocity Measurement and Volumetric Flowrate Determination

At every test location sampled at DuPont, a velocity measurement for a volumetric flowrate determination was either made directly or recorded indirectly by plant process control equipment. In the former case, the measurement was sited at a location according to EPA Reference Method 1 - Sample and Velocity Traverse for Stationary Sources, Federal Register, Volume 42, No. 160, August 18, 1977. Specifications of individual test locations including velocity traverse matrices, equivalent duct diameters, and dimensions are illustrated in Section 4.0 - Test Locations. The execution of the velocity measurement and flowrate determination was performed in accordance with EPA Reference Method 2 - Determination of Stack Gas Velocity and Volumetric Flowrate (Type-S pitot) Federal Register, Volume 42, No. 160, August 18, 1977. The average gas velocity in the stack or duct was determined from the gas density (see 5.1.2 and 5.1.5.1) and from the measurement of the

average velocity head with a S-type pitot tube. The plant flowrate determination was recorded by plant process control equipment operating on a pressure transducing principle. The plant equipment had been previously calibrated against a S-type pitot tube, hence the flowrate data should be considered valid and adequate for the purposes of this study.

5.1.2 Integrated Bag - Evacuated Can Technique

Gaseous samples were collected at each test location for solvent concentration and molecular weight determination. A TRW modified integrated gas sampling train was utilized. The integrated gas sampling train used an evacuated can - Tedlar® bag system to collect the gas sample. The evacuated can method was adapted from EPA Reference Method 3 - Gas Analysis for Carbon Dioxide, Oxygen, Excess Air and Dry Molecular Weight, Federal Register, Volume 42, No. 160, August 18, 1977, and proposed EPA Method 110 - Determination of Benzene Emissions from Stationary Sources.

The evacuated can method was used to collect a given quantity of sample into a bag. This method uses the negative pressure from an evacuated can connected to a sample bag can as the mechanism for obtaining a controllable sample flow. A diapham pump is used to evacuate the can, which is equipped with two self-sealing quick-disconnect valves, to 29" Hg. A leak check of the sample train is performed by connecting a vacuum gauge to one of the quick-disconnect valves. If the pressure does not drop more than 1" Hg in 30 minutes, the can system is considered to be leak-free. The sampling bags were checked for leaks before and after each sampling run by filling the bags with nitrogen (N_2) and allowing the bags to remain overnight. If no leaks were observed and chromatographic analysis proved negative (blank - see 5.2), the sample bag was placed in the sample can and readied. The sampling train was assembled as in Figure 5.1. The sample flow from the source was initiated by opening the needle valve between the two cans. The sample flow was monitored with a flow meter, recorded and adjusted periodically during the sample run (Appendix C.2 - Field Data Sheets). The sample flow will remain constant until the evacuated can reaches a low vacuum level. A one-hour integrated gas sample was taken at a flowrate of two

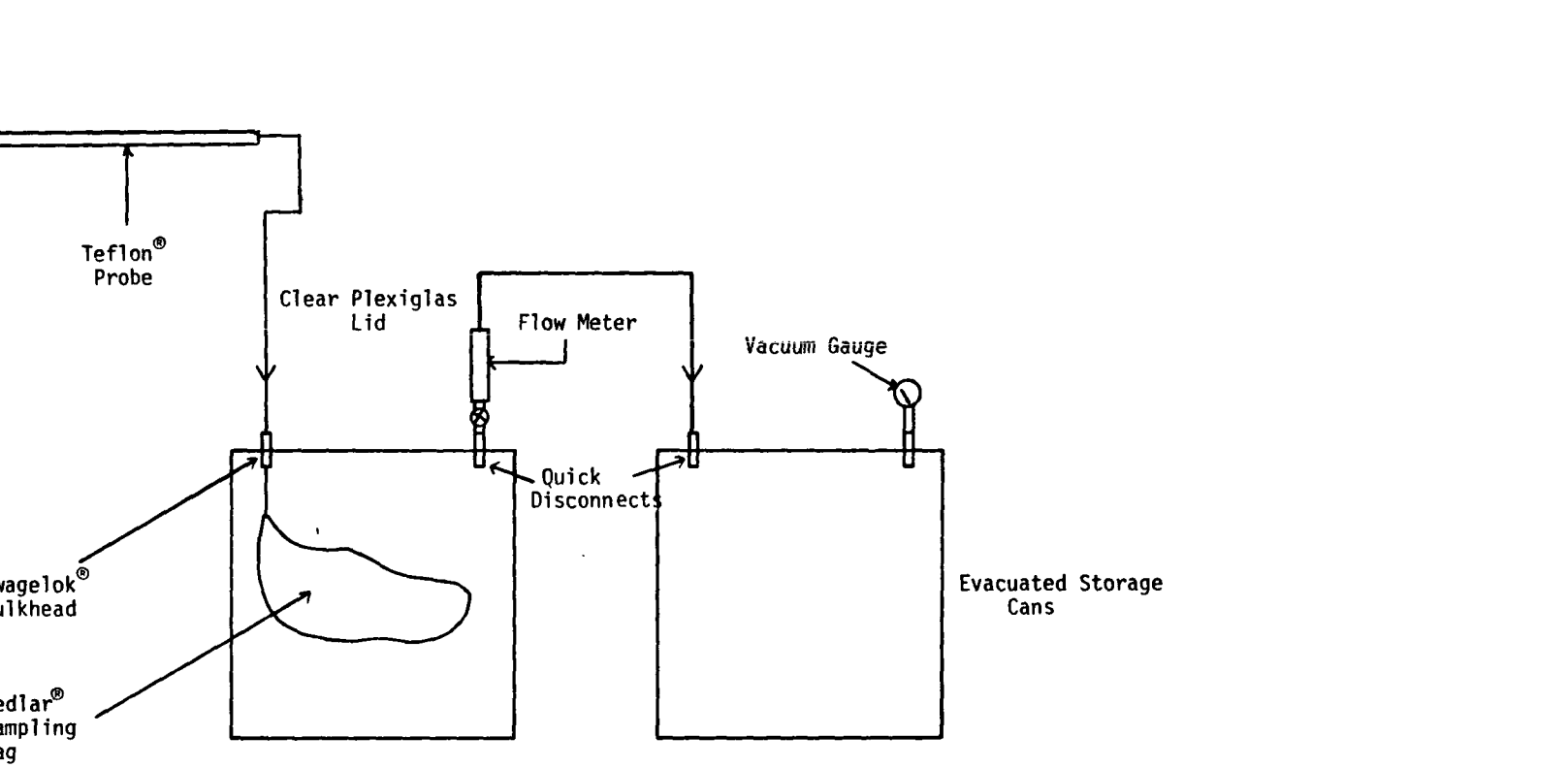

Figure 5.1 EVACUATED CAN SAMPLING SYSTEM

cubic feet per hour. When the appropriate test time was completed, the valve was closed between the cans and the bag immediately capped off and removed from the can. The integrated bag was appropriately labeled and transported immediately by the sampler to the laboratory for analysis.

5.1.3 Continuous Hydrocarbon Monitors (FID)

Solvent cncentration was measured on a continuous basis at each test location. Three separate continuous hydrocarbon monitors operating on the detection principle of flame ionization (FID) were used. Two Beckman Model 400 analyzers and a Beckman 402 analyzer were used. A potentiometric stripchart recorder was used to obtain a permanent record of the solvent concentration. In addition to the stripcharts, continuous monitoring field data sheets were maintained by field personnel during test runs. These continuous monitoring field data sheets are in Appendix B.4. The stripcharts are on file in the TRW project file 80-SNF-1D. The hydrocarbon analyzers were operated according to the manufacturer's operating instructions and the draft EPA Method 25A - Determination of Total Gaseous Organic Concentration using a Flame Ionization Analyzer. The analyzers were calibrated based upon propane (C_3H_8) standards of certified concentrations. Support gases for fuel, combustion air and zero gas were of equivalent grade or better than those specified in the referenced protocol. The continuous monitor stations, are indicated in Figures 5-2, 5-3, 5-4 and 5-5. The essential components of each station were the analyzers, a coated diaphragm pump, sample line, support calibration gases, bypass flowmeters, and moisture condensers. Pertinent information pertaining to the operation of the continuous monitors is listed in Table D (Appendix A.1).

5.1.4 NIOSH Silica Gel Tube Method #S-255

A gas sample for method comparison was collected at each test location by the recommended NIOSH sample method. The gas sample was drawn simultaneously with the other gas sampling methods. A 1/2 to 1 hour sample was withdrawn from the appropriate flue gas stream into a glass tube 7 cm long with a 6-mm O.D. and a 4-mm I.D., containing two

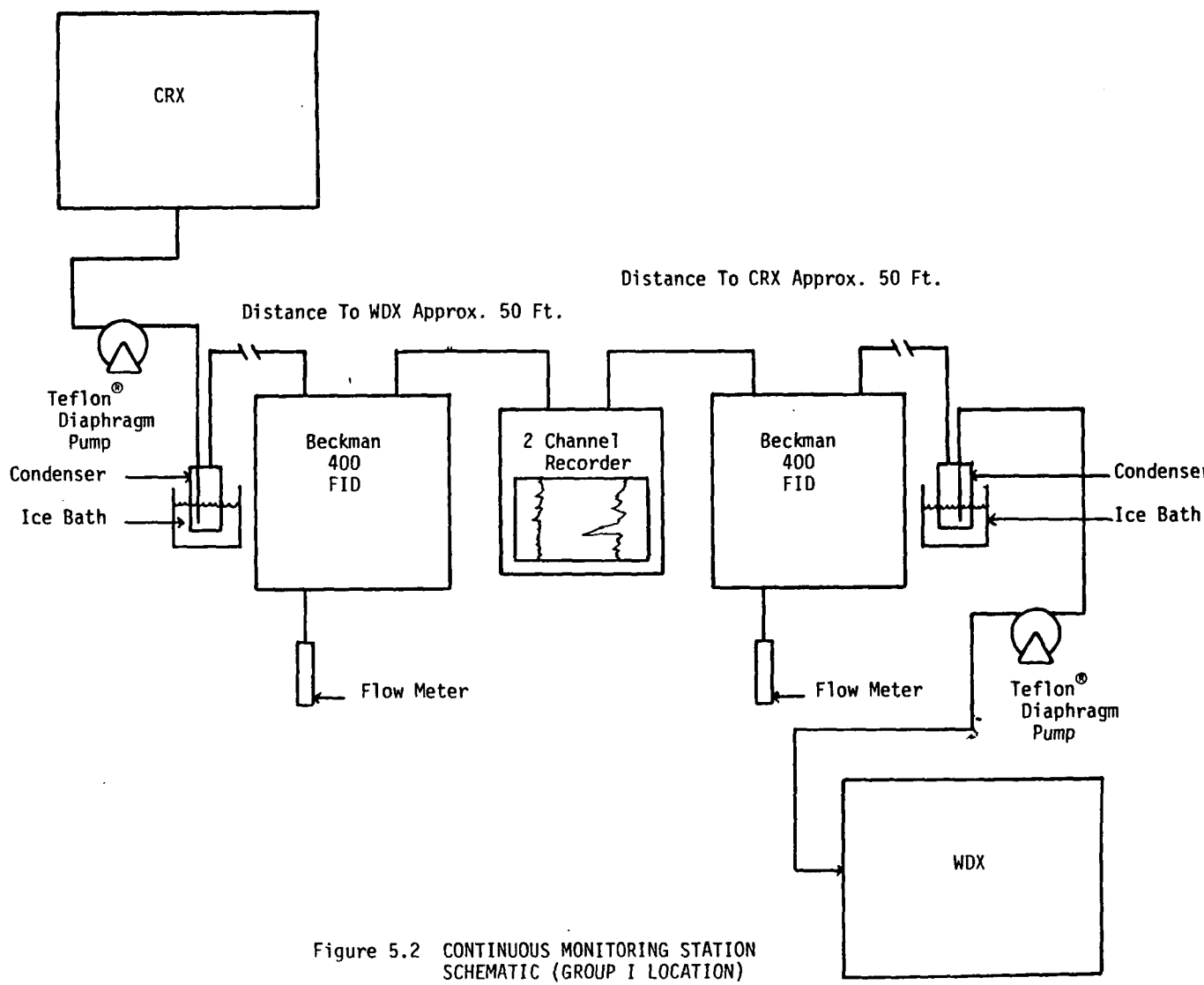

Figure 5.2 CONTINUOUS MONITORING STATION SCHEMATIC (GROUP I LOCATION)

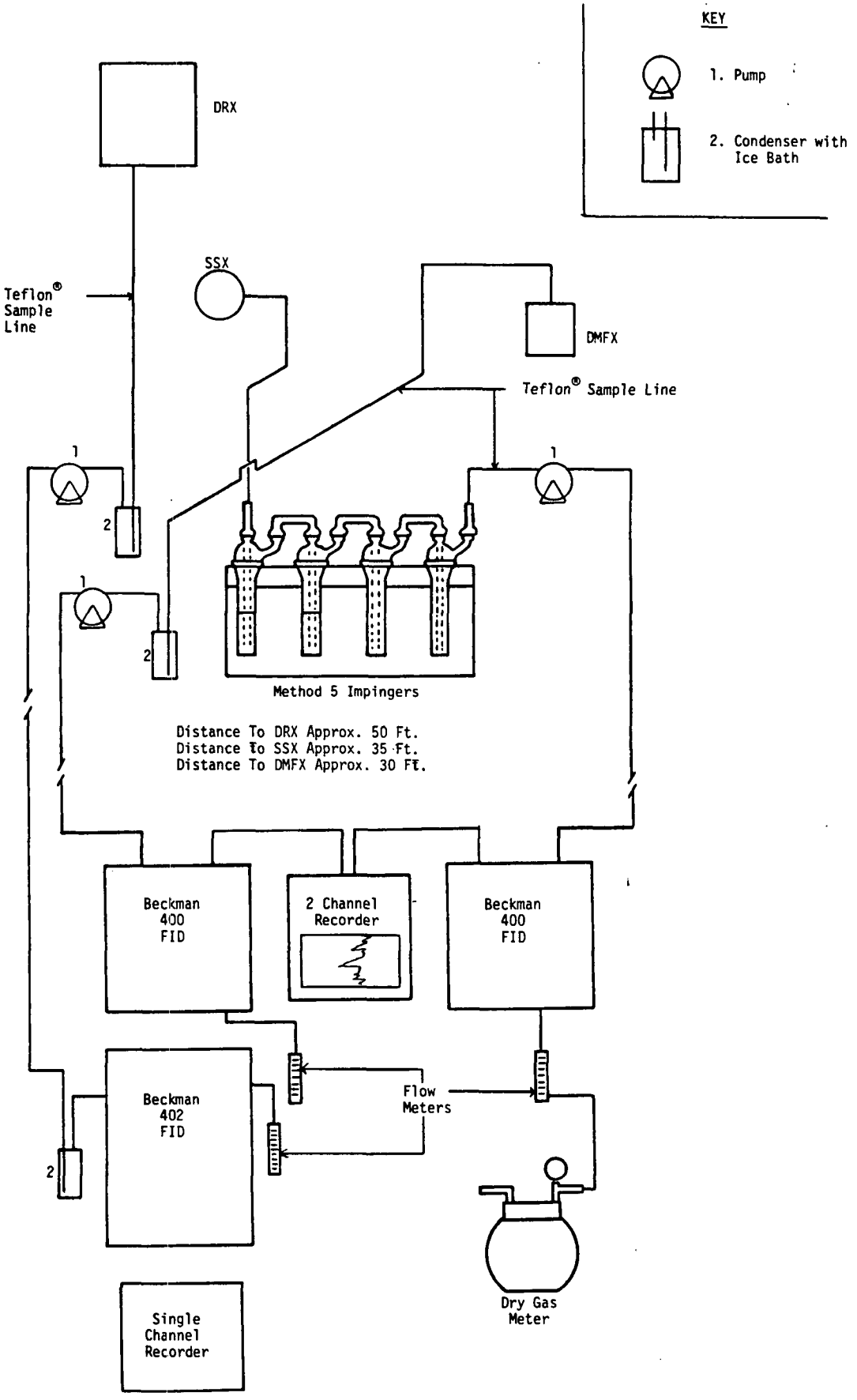

Figure 5.3 CONTINUOUS MONITOR STATION SCHEMATIC (GROUP II LOCATIONS)

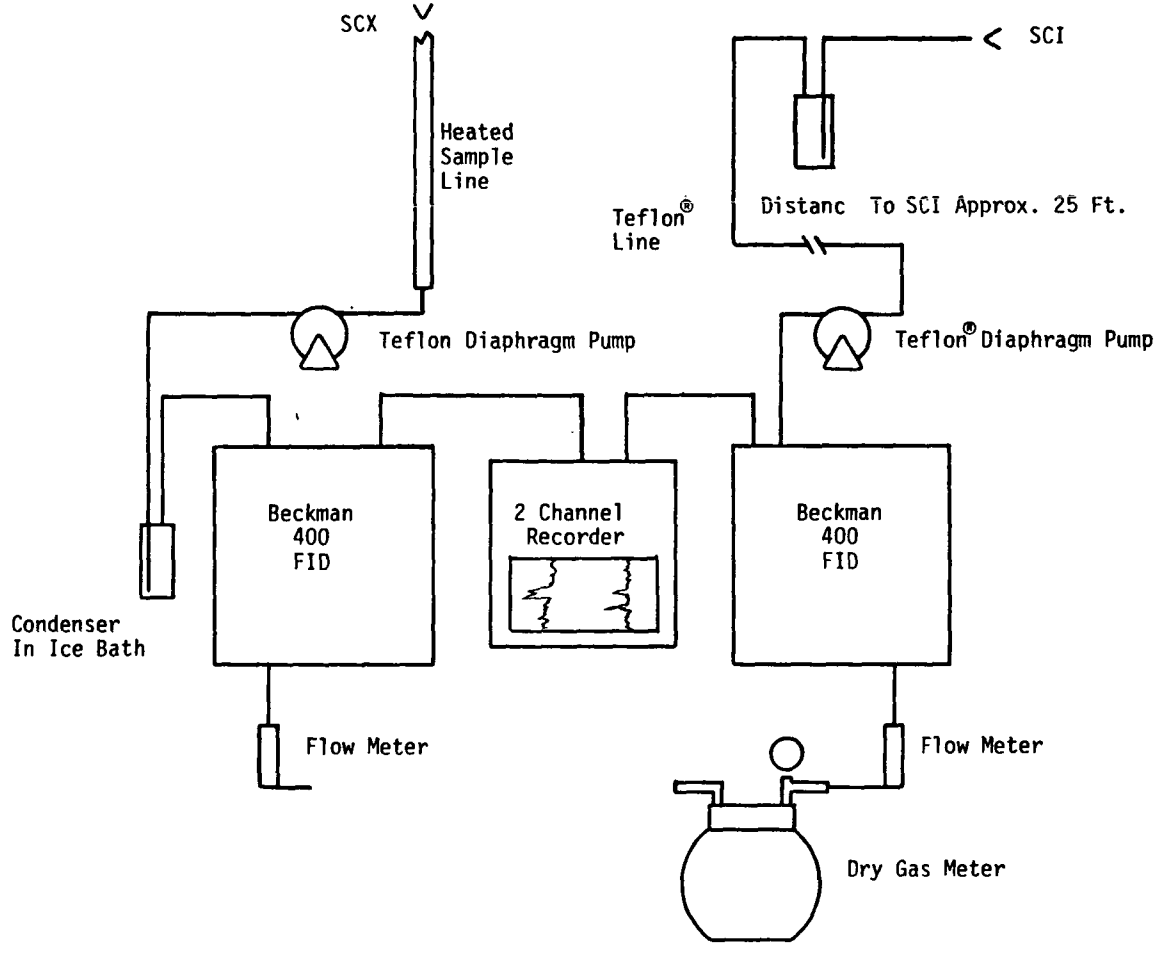

Figure 5.4 CONTINUOUS MONITOR STATION
SCHEMATIC (GROUP III A LOCATIONS)

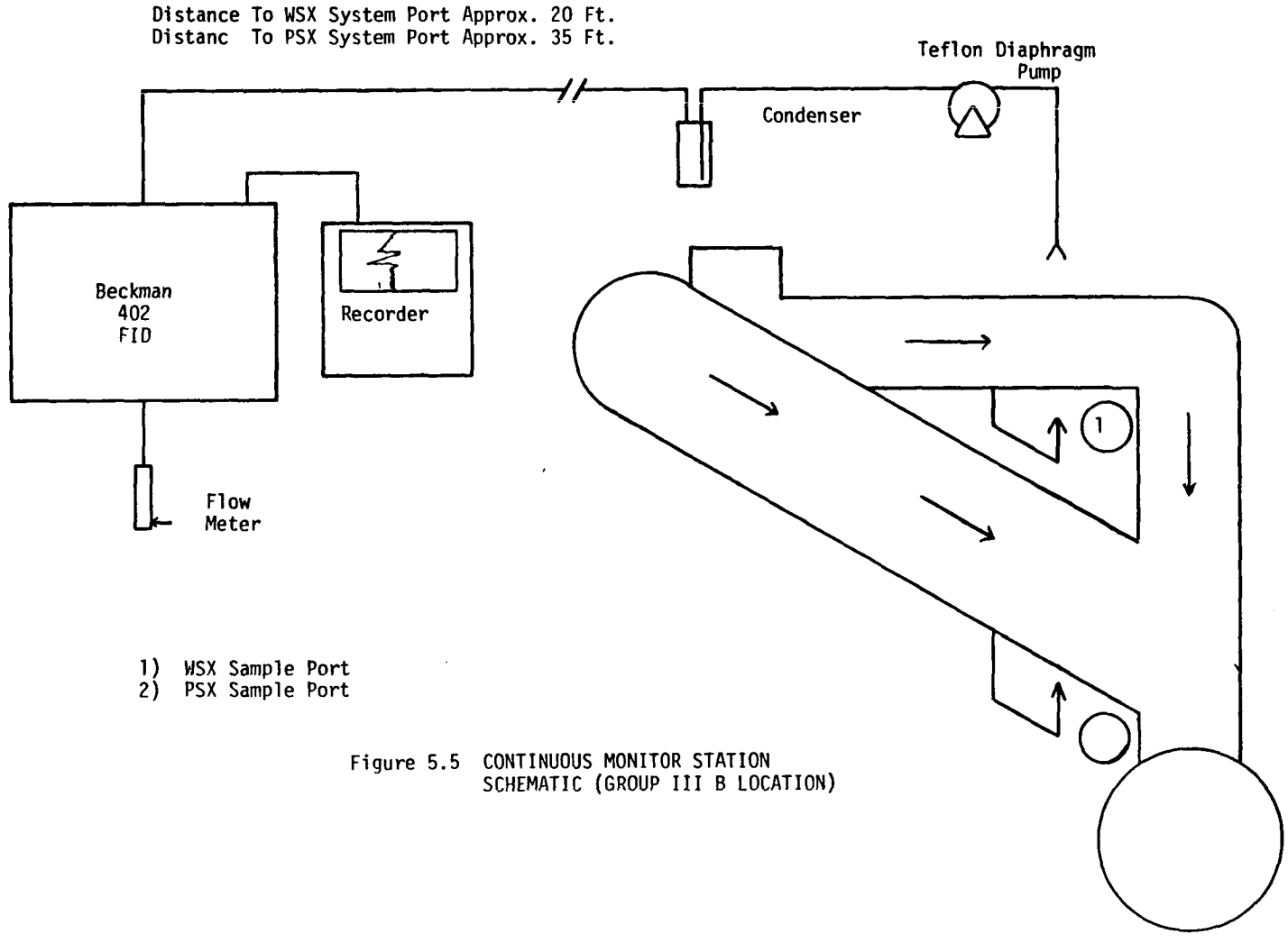

Figure 5.5 CONTINUOUS MONITOR STATION SCHEMATIC (GROUP III B LOCATION)

sections of 20/40 mesh silica gel separated by a 2-mm portion or urethane foam. The absorbing section contained approximately 150 mg of silica gel, the backup section, approximately 75 mg. A 3-mm portion of urethane foam was placed between the outlet end of the tube and the backup section. A plug of glass wool was placed in front of the absorbing section. A calibrated personnel sampling pump (SIPIN Model SP-15) collected the gas sample at an approximate flowrate of 250 milliliters per min (ml/min). Calibraation data and field data sheets are in Appendix B.4.

5.1.5 Moisture Determination

5.1.5.1 Moisture Determination-Conventional

The moisture of the process exhaust gas streams was collected during each day of testing in order to determine dry molecular weight and volumetric flowrate on a dry standard basis. EPA Reference Method 4 - Determination Content in Stack Gases, Federal Register, Volume 42, No. 160, August 18, 1977 was the method utilized. A gas sample is extracted at a constant rate from the source, moisture is removed from the gas stream by condensation through an ice bath, and the moisture determined either volumetrically or gravimetrically. Complete results are given in Appendix A.1, Table A. Moisture field data sheets are contained in Appendix B.5.

5.1.5.2 Experimental Wet Impingement Sample Train

During the preliminary development phase of the synthetic fibers emissions testing program, the high solubility of dimethyl formamide (DMF) was noted. Consequently, it was proposed to trap DMF in impinger solutions of high purity water. A standard Method 4 moisture train was selected. Slight modifications were necessary. The modifications included addition of a fifth midget impinger, no stopcock grease, a tube sample probe, and cleaning of glassware with methylene chloride. The principle of operation was similar to that of the conventional moisture train. Impingers 1, 2, and 3 contained 15 ml of distilled H_2O. The fourth impinger was empty and the fifth impinger held 15 grams of non-indicating ACS reagent grade silica gel. Recovery of the impingers solution was performed with distilled water. The flowrate of the sample train was 8 to 10 standard cubic feet per hour (scfh). The sampling time coincided with the other comparative methods, which ranged from

30 to 60 minutes depending on the expected solvent concentration. Field data sheets recording the sample train operation are in Appendix B.5.

5.2 ANALYTICAL PROCEDURES

Several analytical techniques were used in the field and laboratory. They included gas analysis for dimethyl formamide by gas chromatograph/flame ionization detection (GC/FID), liquid analysis for dimethyl formamide by high performance liquid chromatography (HPLC) and silica gel analysis for dimethyl formamide by GC/FID.

5.2.1 Field Analysis (Shimadzu)

The integrated bag samples were analyzed in the field by gas chromatography/flame ionization detector (GC/FID) for DMF concentrations and gas chromatography/thermal conductivity detector (GC/TCD) for stationary gas concentrations. A Shimadzu Mini 2 equipped with a 6' x 1/8" Teflon column packed with 0.2% Carbowax 20M on Carbopack 80/100 mesh was used to determine the DMF concentrations in the integrated bag. The GC conditions were as follows:

- Column temperature - 96° isothermal
- Injection/detector temperature - 220°C
- Flowrates: Air - 405.4 ml/min
  - H_2 - 31.25 ml/min
  - He - 38.96 ml/min
- Pressures: Air - 1.1 kg/cm^2
  - H_2 - 1.1 kg/cm^2
  - He - 4.0 kg/cm^2

The chromatographic results were recorded and electronically integrated with a Shimazdu CR1A chromatopak. The chromatopak^R operating parameters used during the field analysis were:

- Width - 2
- Slope - adjusted automatically
- Drift - 0
- Minimum peak area - 100
- T-DBL (parameter alteration time) - 1
- Lock - 0
- Stop time - 30 min.

- Attenuation - 2
- Speed - 10
- Spl wt (sample weight) - 100
- Is-wt (weight of internal standard) - 1
- Range - 10

The complete field chromatographic record is in Appendix C.1 for inspection. Figure 5.6 is an example DMF chromatogram from the field analysis. Gas samples were injected into a six-port gas sampling valve, with ports 3 and 4 as sample loop and ports 5 and 6 connected to the column and the detector through nickel tubing. Teflon® tubing was used for the sample loop. Stainless steel attachments were restricted as much as possible so as to minimize adsorption of DMF onto metal surfaces. The gas sampling valve remained in the load position one minute and 20 seconds before each injection to give the sample ample time to flush through the loop. A vacuum pump was used to pull the gas from the Tedlar® bags through the sample loop. The vacuum pump was not needed for the standards because they were in pressurized cylinders. After each sample, the sample loop was blanked by flushing ambient air through the loop with the vacuum pump.

The external standard method was used for calibration. In this method, a standard was run and the response of the detector per unit of the standard was determined by the following:

$$\text{Calibration factor} = \frac{\text{Concentration of amount of standard}}{\text{response or area count of standard}}$$

Then the standard was run again as an unknown to obtain the percentage of the unknown to the known. After the standards, the samples were run again and the amount of the unknown in the sample was calculated:

Amount of unknown = Calibration factor x response of unknown

The standards were run before and after every fourth sample. The standards were purchased from an outside vendor as a quality control procedure. However, the vendor could not certify the standards prior to shipment for use in the field. The calibration gases were, therefore, used as approximate values and the concentration electronically recorded on the chromatogram are only approximations. A post-field certification

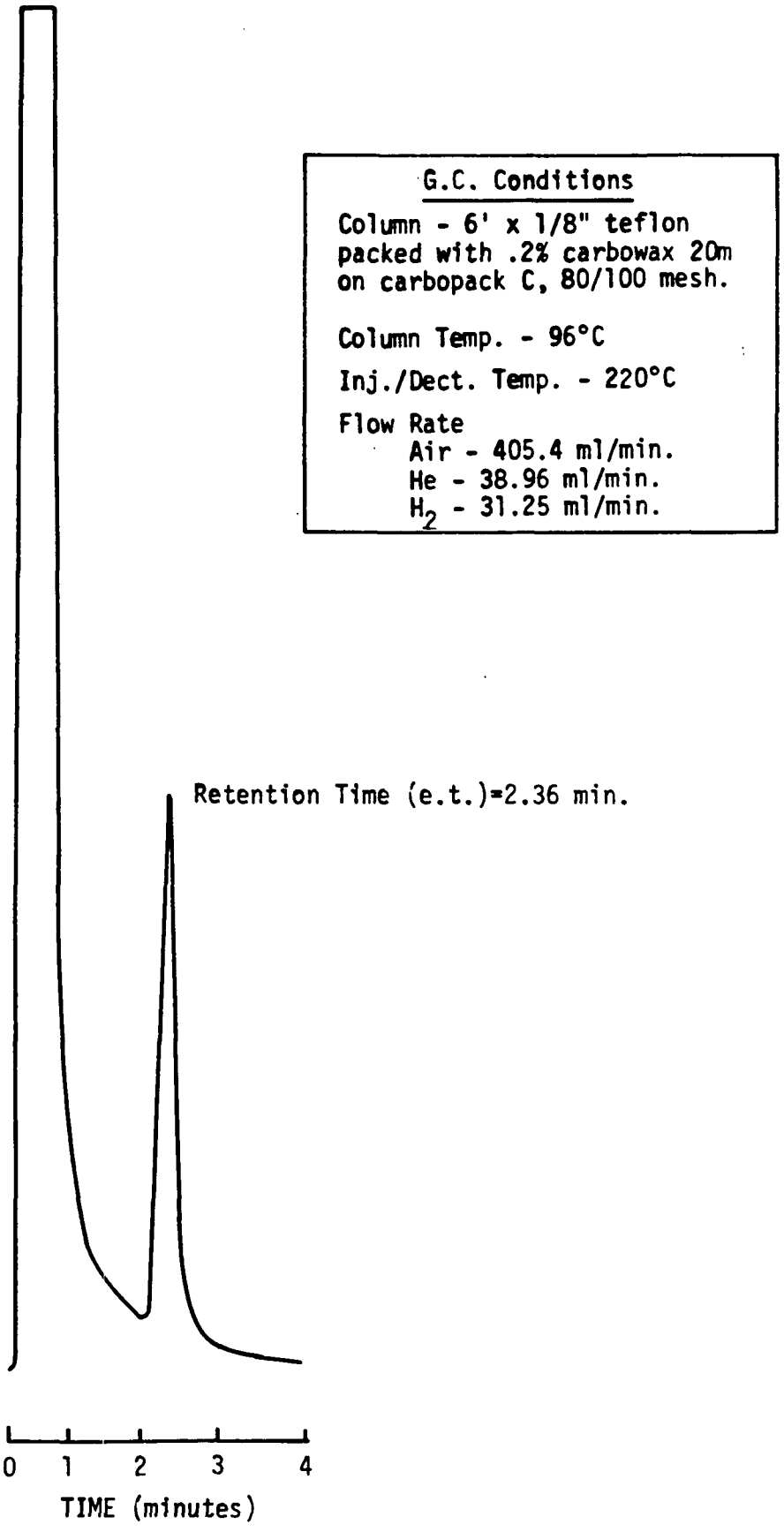

Figure 5.6 DMF Chromatogram (Shimadzu).

of the standards was performed internally by TRW using a high performance liquid chromatography technique (see Section 5.2.4).

Stationary gas analysis for molecular weight determination was conducted in the field on the integrated bag sample with the Shimadzu 3BT gas chromatography/thermal conductivity detector (GC/TCD). The chromatographic conditions were:

- Range - 32
- Column temperature - 32°C
- Injection/detector temperature - 120°C
- Carrier gas - helium (He)
- Back pressure He - 3.0 kg/cm^2

Two 6 foot x 1/8" O.D. stainless steel columns packed with Chromsorb 102 and molecular sieve were used in series to separate carbon dioxide (CO_2), oxygen (O_2), nitrogen (N_2), and carbon monoxide (CO). The analysis was recorded by the chromatopak®. Stationary gas percentages were calculated for each sample based upon daily determined calibration factors from the commercially supplied stationary gas standards and the GC/TCD. An example chromatogram is attached (Figure 5.7).

5.2.2 Wet Impingement - HPLC Analysis

The impinger solutions collected in the field for the experimental wet impingement sampling train were kept refrigerated at 40°F until sample preparation at TRW Research Triangle Park analytical laboratory. All field samples were duly logged and recorded in the appropriate laboratory notebook. Liquid volumes were measured and a 2 milliliter (2 ml) aliquot of each sample was taken for HPLC analysis. Complete HPLC results are in Appendix A.1, Table B.

A Varian Instruments Model 5067 high performance liquid chromatograph (HPLC) was utilized for the separation and detection of the dimethyl formamide. The HPLC was coupled to a variable wave length UV-visible detector and maintained at a wavelength of 240 nm. Integration and retention times were determined electronically with a Varian CDS-11L integrator (Figure 5-8). Samples were injected automatically via a Varian Series 8000 autosampler.

G.C. Conditions

GC-3BT

Oven Temp. - 32°C

Inj./Det. - 120°C

Range 32 mv

He - Backpressure 3.0 kg/cm^2

C-RIA

SMPL # 00

FILE # 1

REPT #1587

Method 44

#	NAME	TIME	CONC	MK	AREA
1	AIR	0.47	0		134336
		1.18			304
3	O-2	1.61	20.6493		25068
4	N-2	1.85	76.0943	V	93390
TOTAL			96.7436		253100

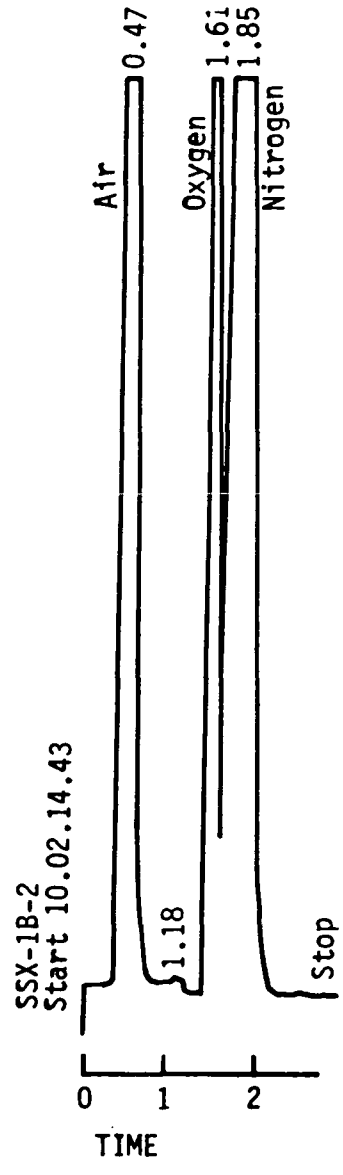

Figure 5.7 Stationary Gas Chromatogram GC/TCD Analysis.

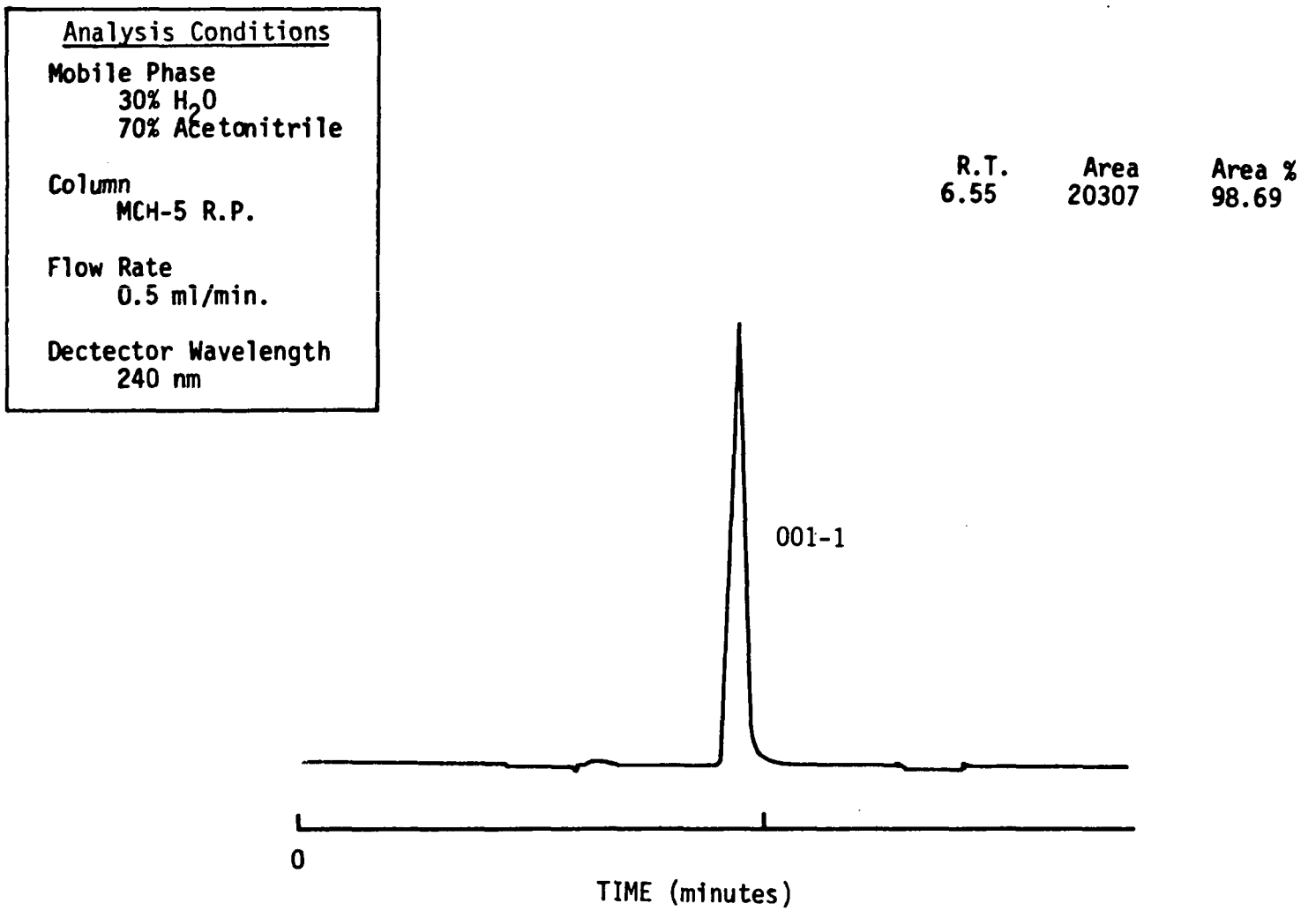

Figure 5.8 HPLC Sample Chromatogram.

The samples were analyzed by high performance liquid chromatography utilizing a 5 micron, monomeric C_{18} reverse phase column maintained at 30°C. The mobile phase was an isocratic mixture of 30% water and 70% acetonitrile flowing at a rate of 0.5 ml/min. The dimethyl formamide was detected with a variable Uv-Vis detector set at a wave length of 240 nanometers. The retention time of dimethyl formamide was 6.54 minutes. Quantitation was based on the peak areas as determined by an electronic integrator with the chromatograms displayed on a strip chart recorder. A record of chromatograms is maintained in Appendix C.2.

The samples were analyzed in the three batches corresponding to the three weeks of the field testing. The detected concentrations of dimethyl formamide varied considerably between sample runs. Consequently, appropriate DMF standards were run and dilutions made as necessary. Dilutions were required frequently to adequately quantify the DMF concentration in the condensate samples collected from the condensers of the continuous monitor system. The collection efficiency of the wet impingement sampling train was very good with an approximate collection efficiency of +95% in the first impinger. On no set of impinger solutions was any detectable quantities of DMF found in the silica gel impinger of the sample train.

5.2.3 NIOSH Method S-255

A Varian 3700 gas chromatograph with a flame ionization detector was used to analyze the silica gel absorption tube samples at the RTP laboratory. The operating conditions of the instrument were:

- Air - 300 ml/min
- Hydrogen (H_2) - 30 ml/min
- Helium (He) - back pressure 24 psig
- Oven temperature - 100°C isothermal

A .2% Carbowax 1500 on Carbopak C 80/100 mesh packed Teflon column (3' x 1/8") was utilized to separate the DMF. The retention time was 2.4 minutes.

All samples were desorbed in 2 ml of methanol and agitated for 30 minutes before transfer to 1 ml autosampler vials. All samples were injected twice using the Varian 8000 autosample coupled with the CDS-111 data system. Appropriate standards were run before and after each

analysis. The analytical results are in Appendix A.1 (Table F). The chromatographic record of the analysis is contained in Appendix C.3. An example chromatogram is attached (Figure 5.9).

5.3 QUALITY CONTROL AND QUALITY ASSURANCE

A quality control device for monitoring the progress of the project was the maintaining of an instrument and a field analytical notebook. The notebook documentation is presented in Appendix F.2 and Appendix F.3. The certification of the propane gas standards used were performed by the supplier, Scott Environmental Technology, Inc. The analytical report for the calibration gases is presented in Appendix F.4. A problem arose when the Scott Laboratory could not perform certification tests on the DMF gas standards. The letter describing this problem is presented in Appendix F.4. The uncertified DMF gas standards were certified by the TRW Analytical Laboratory. The certification procedure performed was the collection of the DMF from the standard gas and analysis of a Varian HPLC. The collection is achieved by drawing a known amount of standard gas through a wet impingement system (modified Method 6 train which used H_2O for the collection media). The analysis was a comparison of known DMF concentrations in water compared with the extracted DMF by standard HPLC procedures.

The calibration of the personal sample pumps utilized in the NIOSH sampling method were performed at the TRW facility according to the recommended NIOSH Method S-255 presented in Appendix E.5. The results of the calibration of the two pumps used at DuPont are provided in Appendix F.5.

The calibration for the two dry gas meters and the pitot tube used are presented in Appendix F.6, F.7, and F.8.

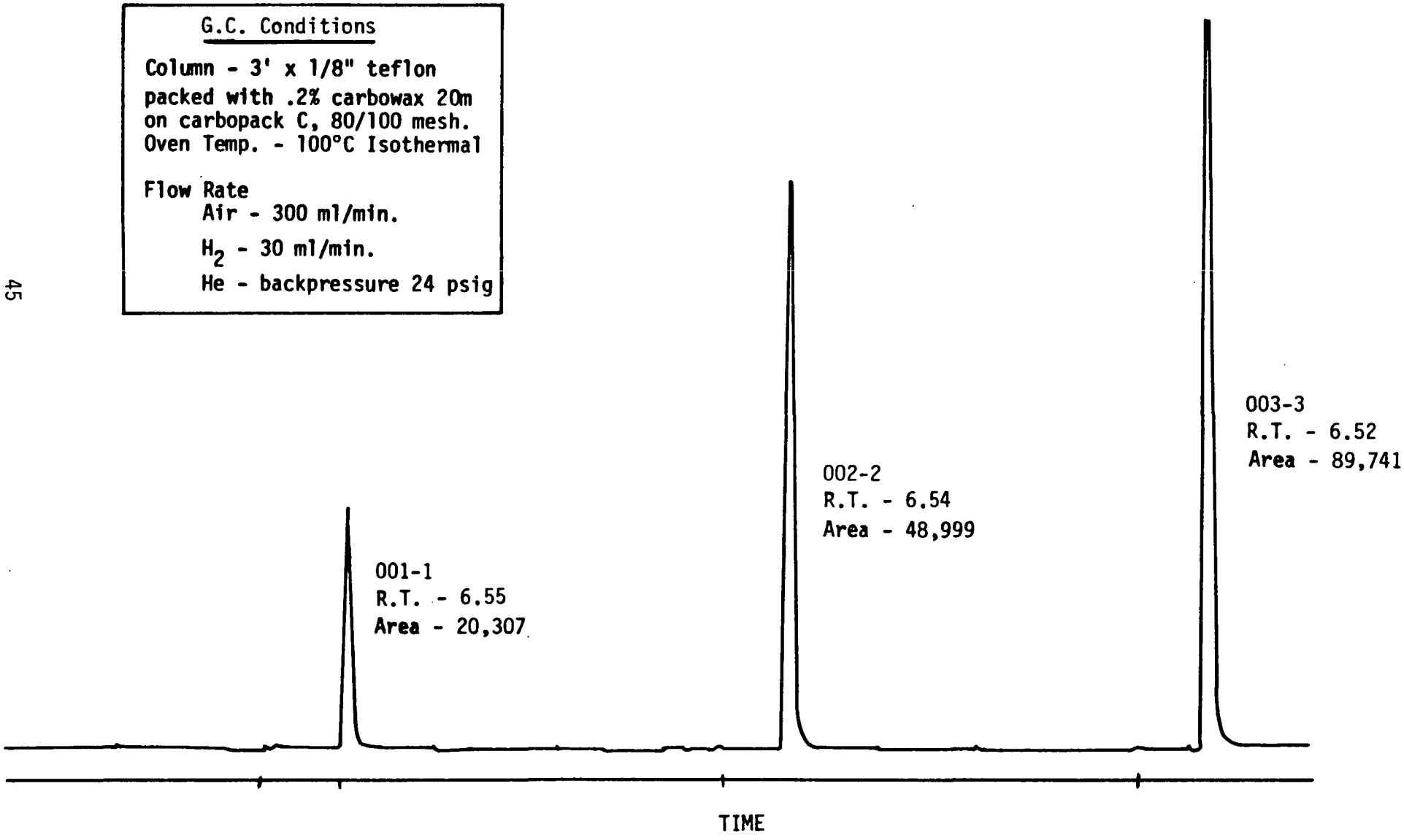

Figure 5.9 Silica Gel Test Chromatogram (DMF) - Varian 3700.

APPENDIX A.1

COMPLETE RESULTS

TABLE A - VOLUMETRIC FLOWRATE COMPLETE RESULTS BY LOCATIONS
DUPONT (MAY PLANT) CAMDEN, S.C.

LOCATION	CRX	WDX	SSX	DMFX	DRX	SCI	SCX	PSX	WSX
Moisture (%)	2.86	3.91	17.61	4.97	15.4	3.3	2.76	2.42	1.21
Mole Fraction Dry (Md)	.971	.961	0.824	.952	---	---	---	.976	.988
Molecular Weight Dry (MWd)	27.09	27.00	27.59	27.54	---	---	---	27.86	28.22
Molecular Weight (MWs)	26.83	26.65	25.91	27.078	---	---	---	27.62	28.10
Velocity (Vs) (fpm)	1685	2591	789	1426	---	---	---	1073	1485
Volumetric Flow rate (Qs) (ACFM)	28502	18422	619	1188	11555	12233	12233	5013	4666
(DSCFM)	27096	17224	453	1043	9771	11830	11899	4761	4545
(DSCMM)	767	487	12.8	29.5	277	335	337	13.5	129

Table B HPLC ANALYTICAL RESULTS - DUPONT (MAY PLANT) CAMDEN, S.C.

FIELD SAMPLE I.D.	LAB #	SAMPLE VOLUME (ml)	DMF CONCENTRATION (mg/ml)	DMF COLLECTED (mg)
CRX-WI-1A	02006	31	1.069	33.14
CRX-WI-1B	02001	32	6.368×10^{-2}	2.04
CRX-WI-1C	02008	33	8.905×10^{-3}	.29
CRX-WI-1D	02015	32	.005	.01
CRX-WI-1E		--	.005	.01
BL-WI-1A	02010	16	.005	.01
BL-WI-1B	02011	32	.005	.01
BL-WI-1C	02012	32	.005	.01
BL-WI-1D	02013	33	.005	.01
BL-WI-1E	02049	--	.005	.01
SSX-WT-1 (1)	02002	367	2.564	940.99
SSX-WT-1 (2)	02003	237	2.394×10^{-2}	5.67
SSX-WT-1 (3)	02018	17	5.872×10^{-3}	.09
SSX-WT-1 (4)	02020	20	.005	.01
SSX-WI-1A	02015	31	2.220	68.8
SSX-WI-1B	02016	33	9.458×10^{-1}	31.2
SSX-WI-1C	02017	33	1.469×10^{-1}	4.85
SSX-WI-1D	02019	34	1.384×10^{-2}	.471
SSX-WI-1E	02046	--	.005	.01
SSX-WI-1F	02014	33	4.05×10^{-2}	1.34

Table B HPLC ANALYTICAL RESULTS - DUPONT (MAY PLANT) CAMDEN, S.C.
(Continued)

FIELD SAMPLE I.D.	LAB #	SAMPLE VOLUME (ml)	DMF CONCENTRATION (mg/ml)	DMF COLLECTED (mg)
DMFX-WI-3A	02033	22	6.105×10^{0}	134
DMFX-WI-3B	02034	8	1.3×10^{-1}	1.04
DMFX-WI-3C	02035	15	2.0×10^{-2}	.3
DMFX-WI-3D	02036	8	1.23×10^{-2}	.098
DMFX-WI-3E	--	--	<.005	<.01
SSX-WT-3A	02021	462	2.545×10^{0}	1176
SSX-WT-3B	02022	80	6.2×10^{-3}	.496
SSX-WT-3C	02039	19	<.005	<.01
SSX-WT-3D	02040	17	<.005	<.01
DMFX-CJ-2	02026	N.D.[a]	2.4×10^{-1}	N.D.
DRX-CJ-2A	02029	257	$1.1429 \times 10^{+1}$	2937
DRX-CJ-2B	02030	13	4.7534×10^{0}	61.8
DRX-CJ-3A	02024	242	1.447×10^{0}	350
DRX-CJ-3B	02025	20	3.361×10^{0}	67.2
DMFX-CJ-3A	02027	74	2.577×10^{0}	190.7
DMFX-CJ-3B	02028	11	4.369×10^{-1}	4.81

[a]Not determined.

Table B HPLC ANALYTICAL RESULTS - DUPONT (MAY PLANT) CAMDEN, S.C.
(Continued)

FIELD SAMPLE I.D.	LAB #	SAMPLE VOLUME (ml)	DMF CONCENTRATION (mg/ml)	DMF COLLECTED (mg)
BL-CJ-1	02001	50	<.005	<.01
DRX-CJ-1A	01998	161	$1.131 \times 10^{+1}$	1821
DRX-CJ-1B	02000	14	2.992×10^{0}	41.9
DMFX-CJ-1A	01999	8	7.803×10^{0}	62.4
WDX-CJ-1	02074	61	5.196×10^{0}	317
DRX-WI-2A	02041	22	9.204×10^{0}	202
DRX-WI-2B	02042	23	5.211×10^{0}	119.8
DRX-WI-2C	02043	20	2.051×10^{0}	41.0
DRX-WI-2D	02044	2	1.378×10^{0}	2.76
DRX-WI-2E		--	<.005	<.01
PSX-WI-3A	02086	23	1.450×10^{1}	333.5
PSX-WI-3B	02087	23	2.088×10^{0}	48.0
PSX-WI-3C	02088	22	1.660×10^{-1}	3.65
PSX-WI-3D	02089	9	2.096×10^{-2}	.189
PSX-WI-3E	02090	--	<.005	<.01

Table B HPLC ANALYTICAL RESULTS - DUPONT (MAY PLANT) CAMDEN, S.C.
(Continued)

FIELD SAMPLE I.D.	LAB #	SAMPLE VOLUME (ml)	DMF CONCENTRATION (mg/ml)	DMF COLLECTED (mg)
PSX-CJ-1B	02075	19	$4.312 \times 10^{+1}$	819
PSX-CJ-2B	00076	12	$4.9606 \times 10^{+1}$	595
PSX-CJ-3B	02077	22	$6.8671 \times 10^{+1}$	1511
SCX-CJ-1	02071	12	2.575×10^{-1}	3.09
SCX-CJ-2	02072	6	8.586×10^{-1}	5.15
SCX-CJ-3	02073	46	8.941×10^{-1}	41.1
SCI-CJ-1	02068	18	$6.367 \times 10^{+1}$	1146
SCI-CJ-2	02069	82	4.0174×10^{2}	32943
SCI-CJ-3	02070	81	2.2465×10^{2}	18197
Blank D.I.	02001	272	<.005	<.01
SSX-CB-1	02023	524	1.6155×10^{1}	8465
DMFX-CJ-2	02026	18	2.4×10^{-1}	4.32
SSX-WT-2A	02031	502	1.903×10^{0}	955
SSX-WT-2B	02032	152	7.6×10^{-3}	1.16
SSX-WT-2C	02038	21	<.005	<.01
SSX-WT-2D	02037	21	<.005	<.01

Table B HPLC ANALYTICAL RESULTS - DUPONT (MAY PLANT) CAMDEN, S.C.
(Concluded)

FIELD SAMPLE I.D.	LAB #	SAMPLE VOLUME (ml)	DMF CONCENTRATION (mg/ml)	DMF COLLECTED (mg)
SCX-WI-1A	02091	14	1.3345×10^{-1}	1.87
SCX-WI-1B	02092	10	2.756×10^{-2}	.28
SCX-WI-1C	02093	16	6.0155×10^{-3}	.10
SCX-WI-1D	02094	8	3.9147×10^{-3}	.03
SCX-WI-1E	02095	--	<.005	<.01
SCI-WI-2A	02096	23	9.9674×10^{0}	229
SCI-WI-2B	02097	24	6.622×10^{-1}	15.9
SCI-WI-2C	02098	19	5.656×10^{-2}	1.07
SCI-WI-2D	02099	15	<.005	<.01
SCI-WI-2E	02100	--	<.005	<.01

Table C - SUMMARY CONTINUOUS MONITORS (F.I.D.) RESULTS - DUPONT (MAY PLANT) CAMDEN, S.C.

LOCATION	RUN 1 CONCENTRATION		RUN 2 CONCENTRATION		RUN 3 CONCENTRATION		AVERAGE CONCENTRATION	
	PPMV as Propane	PPMV as DMF	PPMV as Propane	PPMV as DMF	PPMV as Propane	PPMV as DMF	PPMV as Propane	PPMV as DMF
CRX	14.4	25.4	6.69	11.8	3.95	6.96	8.35	14.7
WDX	3.38	5.96	3.34	5.89	2.54	4.48	3.09	5.44
DMFX	6.33	11.2	14.03	24.7	1.60	2.82	7.32	12.9
SSX	2.0	3.5	2.29	4.03	2.83	4.99	3.56	4.17
DRX	3.23	5.69	2.27	4.0	1.28	2.26	2.26	3.98
SCI	92.2	162	51	90	92.4	162	78.5	138
SCX	7.83	13.8	2.77	4.9	2.7	4.8	4.43	7.81
PSX	3.28	5.8	8.42	14.8	4.0	7.0	5.23	9.22
WSX	---[a]	---	5.17	9.1	5.2	9.2	5.2	9.16

[a]Not sampled

Table D CONTINUOUS MONITORS - PARAMETERS AND RESULTS BY INDIVIDUAL RUNS - DUPONT (MAY PLANT) CAMDEN, S.C.

RUN #	SAMPLE PRESSURE (PSIA)	BYPASS SAMPLE FLOW SCFH(LPM)	FUEL PRESSURE (PSI)	AIR PRESSURE (PSI)	VOLUME (Vm) (FT^3)	TIME (HR)	FID CONCENTRATION[a] PPM C_3H_8	PPM DMF	CONDENSATE FRACTION[b] DMF COLLECTED (mg)	(PPMV)	EMISSION RATES[i] (lb DMF)/hr	(kg DMF)/hr	(lb DMF)/lb product
CRX-1	4	3.0	20	10	7.74	2.58	14.4	25.4	NG[c]	---	7.69	3.50	---
CRX-2	4	3.0	20	10	7.6	2.5	6.69	11.8	NG	---	3.57	1.62	---
CRX-3	4	3.0	20	10	12.8	4.25	3.95	6.96	NG	---	2.11	.96	---
AVERAGE							8.35	14.7	N.D.	N.D.	4.45	2.02	2.42×10^{-4}
WDX-1	2.75	7.0	20	10	19.3	2.75	3.38	5.96	See Average		12.75	5.80	---
WDX-2	2.75	7.0	20	10	17.5	2.5	3.34	5.89	See Average		12.74	5.79	---
WDX-3	2.75	6.0	20	10	25.5	4.25	2.54	4.48	See Average		12.47	5.67	---
AVERAGE							3.09	5.44	317[d]	60.4	12.65	5.75	6.42×10^{-4}
SSX-1	2.75	8.0	20	10	18.0	2.25	19.92	35.1	947	624	3.32	1.51	---
SSX-2	2.75	(3.6)	20	10	26.11[h]	3.17	2.29	4.03	956	435	2.21	1.01	---
SSX-3	2.75	(4.6)	20	10	24.77[h]	3.58	2.83	4.99	1176	564	2.88	1.31	---
AVERAGE							8.35	14.7	1026	541	2.80	1.27	6.77×10^{-4}
DMFX-1	4	1.5	20	10	3.38	2.25	6.33	11.2	62.4	218	2.87	1.21	---
DMFX-2	4	2.5	20	10	8.33	3.33	14.03	24.7	4.32[e]	6[e]	.36[e]	.10[e]	---
DMFX-3	4	2.5	20	10	8.95	3.58	1.60	2.82	196	258	3.02	1.38	---
AVERAGE							7.32	12.9	129	238	2.92	1.33	7.04×10^{-4}

[a]Does not include condensate fraction.

[b]Condensate fraction by HPLC analysis.

[c]Negligible.

[d]Composite of 3 runs.

[e]Not included within average.

[f]Condensate fraction of PSX and WSX combined.

[g]Continuous Monitor not run on WSX-1 due to analysis difficulties.

[h]Measured by dry gas meter.

[i]Includes both gaseous (FID) and condesnate (HPLC) fractions.

Table D CONTINUOUS MONITORS - PARAMETERS AND RESULTS BY INDIVIDUAL RUNS - DUPONT (MAY PLANT) CAMDEN, S.C.
(continued)

RUN #	SAMPLE PRESSURE (PSIA)	BYPASS SAMPLE FLOW SCFH(LPM)	FUEL PRESSURE (PSI)	AIR PRESSURE (PSI)	VOLUME (Vm) (FT^3)	TIME (HR)	FID CONCENTRATION[a] PPM C_3H_8	FID CONCENTRATION[a] PPM DMF	CONDENSATE FRACTION[b] DMF COLLECTED (mg)	CONDENSATE FRACTION[b] DMF COLLECTED (PPMV)	EMISSION RATES[i] (lb DMF)/hr	EMISSION RATES[i] (kg DMF)/hr	EMISSION RATES[i] (lb DMF)/lb product
DRX-1	4	4	20	10	18.1	4.5	3.23	5.69	1863	1223	133.82	60.84	---
DRX-2	4	4	20	10	15.7	3.9	2.27	4.0	2999	2267	247.39	112.45	---
DRX-3	4	4	20	10	16.3	4.06	1.28	2.26	417	304	33.41	15.16	---
AVERAGE							2.20	3.98	1760	1265	138.23	67.8	3.33×10^{-2}
SCI-1	3	(4)	20	10	29.54[h]	2.5	92	162	1146[e]	460[e]	82.24[e]	37.39[e]	---
SCI-2	3	(4)	20	10	53.52[h]	5.17	51	90	32943	7281	974.58	442.98	---
SCI-3	3	(4)	20	10	24.28[h]	4.0	92	162	18197	8865	1193.52	547.52	---
AVERAGE							78.5	138	25560	8073	1085.29	493.3	6.91×10^{-2}
SCX-1	4	2.5	20	10	6.25	2.5	7.83	13.8	3.09	5.8	2.61	1.18	---
SCX-2	4	1.75	20	10	8.45	4.83	2.77	4.9	5.15	7.2	.95	.74	---
SCX-3	4	1.75	20	10	7	4.0	2.7	4.8	41.4[e]	69.4[e]	9.86[e]	4.49[e]	---
AVERAGE							4.43	7.81	4.12	6.5	1.9	.86	1.21×10^{-4}
PSX-1	4	4	20	10	6.16[f]	1.54	3.28	5.8	819	1533	81.99	37.27	---
PSX-2	4	4	20	10	12.9[f]	3.23	8.42	14.8	595[f]	564[f]	29.88	13.58	---
PSX-3	4	4	20	10	18.8	4.7	4.0	7.0	1511[f]	954[f]	51.20	23.29	---
AVERAGE							5.23	9.16	975	1011	54.36	24.71	3.46×10^{-3}
WSX-1[g]	N.D.	N.D.	N.D.	N.D.	N.D.	N.D.	N.D.	N.D.	N.D.	N.D.	N.D.	N.D.	N.D.
WSX-2	4	4	20	10		.83	5.17	9.1	---[f]	---[f]	.46	.21	N.D.
WSX-3	4	4	20	10		.33	5.2	9.2	---[f]	---[f]	.47	.21	N.D.
AVERAGE							5.2	9.16	N.D.	N.D.	.47	.21	N.D.

[a]Does not include condensate fraction.

[b]Condensate fraction by HPLC analysis.

[c]Negligible.

[d]Composite of 3 runs.

[e]Not included within average.

[f]Condensate fraction of PSX and WSX combined.

[g]Continuous Monitor not run on WSX-1 due to analysis difficulties.

[h]Measured by dry gas meter.

[i]Includes both gaseous (FID) and condesnate (HPLC) fractions.

Table E INTEGRATED BAG METHOD (GC/FID) COMPLETE RESULTS - DUPONT (MAY PLANT) CAMDEN, S.C.

RUN #	CHROMATOGRAM[a] REPORT #	AREA COUNTS	CONCENTRATION[b] (PPMV as DMF)
WDX-IB-1	1307	4200	9.2
	1308	4213	9.3
	1313	3406	7.5
	1314	3783	8.3
	Average	3901	8.6
WDX-IB-3	1418	1469	3.2
	1419	1482	3.3
	1420	1498	3.3
	Average	1483	3.3
WDX Average			5.95

[a]Appendix C

[b]Based upon HPLC standard verification (1000 ppm).

Table E INTEGRATED BAG METHOD (GC/FID) COMPLETE RESULTS - DUPONT (MAY PLANT) CAMDEN, S.C.
(Continued)

RUN #	CHROMATOGRAM[a] REPORT #	AREA COUNTS	CONCENTRATION[b] (PPMV as DMF)
CRX-IB-1	1320	2995	6.6
	1321	3375	7.4
	1322	3599	7.9
	1323	3206	7.1
	Average	3294	7.3
CRX-IB-2	1346	6097	13.4
	1347	8446	18.6
	1348	8582	18.9
	Average	7708	17.0
CRX-IB-3	1412	4968	10.9
	1413	5505	12.1
	1414	5175	11.4
	Average	5216	11.5
CRX Average			11.93

[a]Appendix C

[b]Based upon HPLC standard verification (1000 ppm).

Table E INTEGRATED BAG METHOD (GC/FID) COMPLETE RESULTS - DUPONT (MAY PLANT) CAMDEN, S.C.
(Continued)

RUN #	CHROMATOGRAM[a] REPORT #	AREA COUNTS	CONCENTRATION[b] (PPMV as DMF)
DRX-IB-1	1522	8737	19.2
	1523	9484	20.9
	1524	8706	19.2
	1525	9349	20.6
	1526	9131	20.1
	Average	9081	20.0
DRX-IB-2	1594	1014	2.2
	1595	1193	2.6
	1596	1072	2.4
	1597	1132	2.5
	1598	1182	2.6
	Average	1119	2.5
DRX-IB-3	1643	1049	2.3
	1644	1586	3.5
	1645	1811	4.0
	1646	2059	4.5
	1647	2387	5.3
DRX-IB-3	1648	2625	5.8
	Average	1920	4.2

[a]Appendix C

[b]Based upon HPLC standard verification (1000 ppm).

Table E INTEGRATED BAG METHOD (GC/FID) COMPLETE RESULTS - DUPONT (MAY PLANT) CAMDEN, S.C.
(Continued)

RUN #	CHROMATOGRAM[a] REPORT #	AREA COUNTS	CONCENTRATION[b] (PPMV as DMF)
DMF-IB-1	1507	2582	5.7
	1508	3708	8.2
	1509	3710	8.2
	Average	3333	7.3
DMF-IB-2	1578	1421	3.1
	1579	1511	3.3
	1580	1496	3.3
	Average	1476	3.2
DMF-IB-3	1638	654	1.4
	1639	779	1.7
	1640	740	1.6
	Average	724	1.6
DMF Average			4.03

[a]Appendix C

[b]Based upon HPLC standard verification (1000 ppm).

Table E INTEGRATED BAG METHOD (GC/FID) COMPLETE RESULTS - DUPONT (MAY PLANT) CAMDEN, S.C.
(Continued)

RUN #	CHROMATOGRAM[a] REPORT #	AREA COUNTS	CONCENTRATION[b] (PPMV as DMF)
SSX-IB-1	1500	4320	9.5
	1501	3049	6.7
	1502	3614	8.0
	1503	3366	7.4
	Average	3587	7.9
SSX-IB-2	1574	580	1.3
	1575	641	1.4
	1576	655	1.4
	Average	625	1.4
SSX-IB-3	1635	516	1.1
	1636	762	1.7
	1637	828	1.8
	Average	702	1.5
SSX Average			3.6

[a]Appendix C

[b]Based upon HPLC standard verification (1000 ppm).

Table E INTEGRATED BAG METHOD (GC/FID) COMPLETE RESULTS - DUPONT (MAY PLANT) CAMDEN, S.C.
(Continued)

RUN #	CHROMATOGRAM[a] REPORT #	AREA COUNTS	CONCENTRATION[b] (PPMV as DMF)
SCI-IB-1	1707	35495	78.1
	1708	46084	101.4
	1709	50252	110.6
	1710	44962	99.0
	1711	45389	99.9
	Average	44436	97.8
SCI-IB-2	1800	63282	139.3
	1801	65889	145.0
	1802	70057	154.2
	1803	70666	155.5
	Average	67474	148.5
SCI-IB-3[c]	1868	132432	291.5
	1869	149372	328.7
	1870	138021	303.8
	1871	139294	306.6
	Average	139780	307.7
SCI Average			123.15[d]

[a]Appendix C

[b]Based upon HPLC standard verification.

[c]Suspected data - No blank performed - See Appendix C.

[d]Average of two sampling runs (Run #SCI-IB-3, omitted).

Table E INTEGRATED BAG METHOD (GC/FID) COMPLETE RESULTS - DUPONT (MAY PLANT) CAMDEN, S.C.
(Continued)

RUN #	CHROMATOGRAM[a] REPORT #	AREA COUNTS	CONCENTRATION[b] (PPMV as DMF)
SCX-IB-1	1735	700	1.5
	1736	822	1.8
	1737	570	1.3
	1738	669	1.5
	1739	433	1.0
	Average	639	1.4
SCX-IB-2	1780	0	
	1781	0	
	1782	0	
	1783	0	
	1784	0	
	Average	0	0
SCX-IB-3	1850	7370	16.2
	1851	8457	18.6
	1852	9843	21.7
	1853	9578	21.1
	Average	8812	19.4
SCX Average			6.93

[a]Appendix C.

[b]Based upon HPLC standard verification.

Table E INTEGRATED BAG METHOD (GC/FID) COMPLETE RESULTS - DUPONT (MAY PLANT) CAMDEN, S.C.
(Continued)

RUN #	CHROMATOGRAM[a] REPORT #	AREA COUNTS	CONCENTRATION[b] (PPMV as DMF)
PSX-IB-1	1723	20317	44.7
	1724	29583	65.1
	1725	29448	64.8
	Average	26449	58.2
PSX-IB-2	1785	8297	18.3
	1786	10576	23.3
	1787	11553	25.4
	1788	11095	24.4
	Average	10380	22.8
PSX-IB-3	1865	123596	272.0
	1866	130622	287.5
	1867	128402	282.6
	Average	127540	280.7
PSX Average			120.56

[a]Appendix C.

[b]Based upon HPLC standard verification (1000 ppm).

Table E INTEGRATED BAG METHOD (GC/FID) COMPLETE RESULTS - DUPONT (MAY PLANT) CAMDEN, S.C.
(Concluded)

RUN #	CHROMATOGRAM[a] REPORT #	AREA COUNTS	CONCENTRATION[b] (PPMV as DMF)
WSX-IB-1	1813	4481	9.9
	1814	5906	13.0
	1815	5111	11.2
	1816	5649	12.4
	1819	8943	19.7
	Average	6018	13.2
WSX-IB-2	1858	11461	25.2
	1859	12749	28.1
	1860	12486	27.5
	Average	12232	26.9
WSX Average			20.05

[a]Appendix C

[b]Based upon HPLC standard verification (1000 ppm).

TABLE F - NIOSH METHOD S-255 SAMPLING AND ANALYSIS RESULTS

SAMPLE ID #	TIME	SAMPLE COLLECTION		SAMPLE VOLUME	DMF	CONCENTRATION	
	(min.)	(counts)	(factor - ml/cnts.)	(cc)	(mg)	(mg/m^3)	(ppmv)
WDX - SGT	35	19799	.427	8514	.72	84.6	28.5
CRX - SGT	60	34261	.364	12471	1.35	108	36.3
SSX - SGT	22	14120	.364	5140	12.09	2352	788
DRX - SGT	46	25580	.427	10927	12.67	1160	388
DMF - SGT	60	33594	.364	12228	4.43	362	121
PSX - SGT	60	33455	.427	14285	14.95	1047	351
SCI - SGT	15	9416	.364	3427	48.63[b]	14190	4953
SCX - SGT	39	22048	.427	9414	<.1[a]	---	<.01

[a]Not detected

[b]Value exceeds recommended value for NIOSH method.

APPENDIX A.2

SAMPLE CALCULATIONS

Table A.2. SAMPLE CALCULATIONS

SAMPLE CALCULATION TO PROVIDE THE VOLUMETRIC FLOWRATE (STANDARD CONDITIONS) AT DMFX LOCATION DURING TEST #2

1. $$Vmstd = \frac{17.64 \times Vm \left(P_B + \frac{\Delta\overline{H}}{13.6}\right)}{(Tm + 460)} = Ft^3$$

$$Vmstd = \frac{17.64\ (4.940)\ \left(29.76 + \frac{.02}{13.6}\right)}{(75 + 460)}$$

$$Vmstd = \frac{(17.64)\ (29.76)\ (4.940)}{535}$$

$$Vmstd = 4.847\ ft^3$$

2. $$V_{wstd} = 0.0474 \times Vw = ft^3$$

$$V_{wstd} = 0.0474 \times 4.1$$

$$V_{wstd} = 0.1943\ ft^3$$

3. $$\frac{V_{wstd}}{V_{mstd} + V_{wstd}} = B_{ws}$$

$$\frac{(0.1943)}{(4.847 + .1943)}$$

$$= 3.85\%$$

Table A.2. Continued

4. $Md = \frac{100 - \%M}{100}$

$Md = \frac{100 - 3.85}{100}$

$Md = .962$

5. $MWd = (\% CO_2 \times \frac{44}{100}) + \%O_2 \times \frac{32}{100}) + (\%N_2 \times \frac{28}{100})$

$MWd = (0\% \times \frac{44}{100}) + (20.82 \times \frac{32}{100}) + (77.07 + \frac{28}{100})$

$0 + 6.662 + 21.58$

$MWd = 28.242$

6. $MW = MWd \times Md + 18(1-Md)$

$(28.242)\ (.962) + 18\ (1-9.62)$

$(28.242)\ (.962) + 18\ (.038)$

$(28.242)\ (.962) + .684$

$Mw = 27.853$

7. $Vs = K_p C_p \sqrt{\Delta P} \sqrt{\frac{Ts}{Ps\ M_w}}$

$Vs = (.84)\ (85.49)\ (.387) \left(\frac{571.8}{29.76\ (27.853)}\right)$

$Vs = 23.082$ ft./sec.

$Vs = 1384.926$ ft./min.

8. $\frac{.123\ (Vs)\ (As)\ (Md)\ (Ps)}{(Ts + 460)} = SCFM$

$\frac{.123\ (1384.926)\ (144)\ (.962)\ (29.77)}{571.8}$

$SCFM = 1228.58$

Table A.2 Continued

Nomenclature

B_{ws} = Water vapor in the gas stream, proportion by volume.

K_p = 85.49 ft/sec Pitot tube constant for English system.

C_p = .84 Pitot tube calibration coefficient dimensionless.

%M = Percent moisture by volume.

Md = Mole fraction dry gas.

MW = Molecular weight of stack gas - wet basis (lb/lb mole).

MWd = Molecular weight of gas - dry basis (lb/lb mole).

P_B = Barometric pressure in inches of mercury.

P_m = Absolute pressure of the dry gas meter in inches of mercury (Hg).

P_s = Absolute pressure of the stack in inches of mercury (Hg).

T_M = Temperature of the dry gas meter degrees Fahrenheit.

V_s = Stack gas velocity (ft/sec).

V_{mstd} = Volume of gas at standard conditions sample measured by dry gas (ft^3).

V_{wstd} = Volume of water vapor in the gas sample, corrected to standard conditions (ft^3).

$\Delta\bar{H}$ = Average orifice pressure differential (in. H_2O).

Table A.2. Continued

9. Sample calculation for response factor of propane to DMF.[a]

$$\text{Response Factor } (F_3) = \frac{\text{DMF Response } (F_1)}{\text{Propane Response } (F_2)}$$

Where:

$$F_1 = \frac{\text{Average Area Counts (DMF)}}{100 \text{ ppm}} (100 \text{ ppm})$$

$$F_2 = \frac{\text{Average Area Counts Propane}}{402 \text{ ppm}}$$

$$\frac{F_1}{F_2} = F_3$$

$$F_3 = 1.76$$

[a]As measured of a Shimadzo Mini 1 GC/FID.

Table A.2 Continued

10. Sample calculation to provide the concentration level of the WDX location by the silica gel tube method.

(Example of WDX-SGT)

$$\text{ppm DMF} = \frac{.72\ \text{mg}}{19799\ \text{counts}} \times \frac{\text{counts}}{.427\ \text{ml}} \times \frac{1000\ \text{ml}}{\ell} \times \frac{1000\ \ell}{\text{m}^3} \times (.335)$$

$$= 28.53\ \text{ppmv}$$

Where:

.72 mg = Weight of DMF collected in the sample.

19799 counts = Number of sample pump counts over the sample period.

.427 ml = Number of ml/count from the sippin pump calibration data.

1000 = Conversion factor from ml to liters.

1000 = Conversion factor from liters to cubic meters.

0.335 = Conversion factor of DMF from mg/m^3 to ppm from the Bureau of Mines tabulation table for a gas with MW = 73, 25°C and 760 mm Hg^2.

28.53 ppmv DMF = Concentration level of DMF in the gas stream by volume.

11. Sample calculation to provide the concentration level of DMF in the gas stream at DMFX location.

$$C_{FID}\ (RF) = C_{DMF}$$

Where:

C_{FID} = Concentration level at DMFX by the FID Continuous Monitors is 6.33 ppm as propane.

RF = Response factor of C_3H_8 to DMF is 1.76.

C_{DMF} = Concentration level of DMF at the DMFX location.

$$(6.33)\ (1.76) = 11.12$$

$$C_{DMF} = 11.12\ \text{ppmv}$$

Table A.2. Continued

12. Sample calculation to provide the production rate compared in pounds of DMF emission to the pounds of product.

(Example Day 1 at the WDX)

$$\frac{\text{lb DMF}}{\text{lb Product}} = \frac{1.14 \text{ lb DMF}}{\text{hr.}} \times \frac{4 \text{ hr.}}{\text{Test Period}} \times \frac{\text{Test Period}}{71990 \text{ lb Product}}$$

$$= 6.33 \times 10^{-5} \quad \frac{\text{lb DMF}}{\text{lb Product}}$$

Where:

$\frac{1.14 \text{ lb. DMF}}{\text{hr.}}$ = Emission rate of DMF per hour at the WDX location.

4 hr. = Time length of test period.

17990 lb = lb. product processed over the test period.

13. Sample calculation to provide the concentration level by the wet impingement method.

(Example of SCX-WI-1)

$$C_{WI} = \frac{1.87 \text{ mg}}{9.767 \text{ ft}^3} \quad \frac{35.42 \text{ mg}}{\text{m}^3} \quad \frac{.335}{1}$$

$$C_{WI} = 2.27 \text{ ppmv DMF}$$

Where:

C_{WI} = Concentration of DMF as determined by the wet impingement method.

1.87 mg = Detected weight of DMF in the sample.

9.767 ft.^{3} = Volume of dry gas sampled at standard conditions - 68°F, 29.92" hg.

35.42 mg = Conversion factor from mg/ft^3 to mg/m^3.

.335 = Conversion factor of DMF from mg/m^3 to ppm from the Bureau of Mines tabulation table for DMF with a MW = 73, 25°C, and 760 mm Hg[2].

Table A.2. Concluded

14. Sample calculation for ppm concentration of gas stream to emission rate in lb/hr.

(Example)

$$\frac{lb}{hr.} = (9.58\ ppm)\ \frac{2.99\ mg}{m^3} \times \frac{798.4\ m^3}{min.} \times \frac{60\ min.}{hr.} \times \frac{1\ kg}{10^6\ mg} \times \frac{2.2\ lb}{kg}$$

$$= \frac{3.019\ lb.\ DMF}{hr}$$

9.58 ppm = DMF concentration level by volume.

$\frac{2.99\ mg}{m^3}$ = Conversion factor for DMF from the Bureau of Mines at standard, temperature, and pressure.

$\frac{798.4\ m^3}{min}$ = Flow in dry standard cubic meters per minute (DSCMM).

$\frac{60\ min.}{hr}$ = Conversion factor of minutes to hours.

$\frac{1\ kg}{10^6\ mg}$ = Conversion factor of milligrams to kilograms.

$\frac{2.2\ lb}{kg}$ = Conversion factor of kilograms to pounds.

$\frac{3.019\ lb}{hr}$ = Mass Emission Rate of DMF from gas stream.