United States
Environmental Protection
Agency

Office of Air Quality
Planning and Standards
Research Triangle Park NC 27711

EMB Report 78-OCM-3
March 1979

Air

EPA

Benzene Organic Chemical Manufacturing

Emission Test Report: Ethylbenzene/Styrene Cos-Mar Carville, Louisiana

SOURCE TEST AT COS-MAR'S

ETHYLBENZENE/STYRENE PLANT

CARVILLE, LOUISIANA

Contract No. 68-02-2812
Work Assignment 11

EPA Technical Manager: Winton Kelly

Prepared for:

U.S. ENVIRONMENTAL PROTECTION AGENCY
Emission Standards and Engineering Division
Emission Measurements Branch
Research Triangle Park, North Carolina 27711

TRW
ENVIRONMENTAL ENGINEERING DIVISION

TABLE OF CONTENTS

Section		Page
1.0	INTRODUCTION	1
2.0	SUMMARY OF RESULTS	2
3.0	PROCESS DESCRIPTION	22
4.0	LOCATION OF SAMPLING POINTS	23
5.0	SAMPLING AND ANALYSIS PROCEDURE	29
APPENDICES		
A.	COMPLETE RESULTS AND CALCULATIONS	36
B.	GAS CHROMATOGRAPH RESULTS	41
C.	LABORATORY RESULTS	63
D.	SAMPLING PROCEDURES	115
E.	FIELD DATA SHEETS	121
F.	TEST LOG	154
G.	PROJECT PARTICIPANTS	157

LIST OF FIGURES

Number		Page
2.1	Benzene Drying Column Vent Equipment	6
2.2	Modified Moisture Train	7
2.3	Caustic Scrubber Equipment	8
2.4	Catalyst Mix Tank Equipment	9
2.5	Benzene/Toluene Column Vacuum Equipment	10
4.1	Benzene Drying Column Vent Equipment	25
4.2	Caustic Scrubber Equipment	26
4.3	Catalyst Mix Tank Equipment	27
4.4	Benzene/Toluene Column Vacuum Equipment	28

LIST OF TABLES

Number		Page
2.1	Results of Gas Sampling Analysis - Test Point #1	11
2.2	Results of Gas Sampling Analysis - Test Point #2	12
2.3	Summary of Results Species Anaylsis - Organic Condensate at Points 1 and 2	13
2.4	Results of Gas Sampling Analysis - Test Point #4	14
2.5	Results of Gas Sampling Analysis - Test Point #5	15
2.6	Summary of Results Caustic Scrubber Liquid Analysis (Point #6)	16
2.7	Results of Gas Sampling Analysis - Test Point #7	17
2.8	Results of Gas Sampling Analysis - Test Point #8	18
2.9	Results of Gas Sampling Analysis - Test Point #9	19
2.10	Results of Gas Sampling Analysis - Test Point #10. . . .	20
2.11	Gas Flow Calculations for Locations 5, 7, and 10	21

1.0 INTRODUCTION

Under the Clean Air Act, The U.S. Environmental Protection Agency (EPA) is required to establish National Emission Standards for Hazardous Pollutants for emissions that have been found to cause adverse health effects. Benzene has been listed as a hazardous pollutant and studies have been initiated to develop background information. The test program at this facility was conducted to collect emission data from ethylbenzene-styrene production for these studies.

Testing was conducted at the Cos-Mar, Carville, Louisiana No. 2 Ethylbenzene-Styrene plant during June 19-30 and July 10-14, 1978, By TRW Environmental Engineering Division personnel under contract to EPA. Testing was coordinated and observed by a representative of Monsanto Research Corporation, also under contract to EPA.

The purpose of testing was to obtain data before and after control devices (if present) for total organics and specifically, benzene from the following systems:

- Benzene Drying Column Vent Equipment
- Alkylate Degasser Vent Equipment
- Catalyst Mix Tank Equipment
- Benzene/Toluene Column Vent Equipment

The number of locations sampled, a system description, summary of specific test methods, sample point locations, and a results presentation are given separately in Section 2 of this report for each of the above systems. General test methods are presented in Section 5. Detailed sample location descriptions are included in Section 4. Complete data summaries, sample calculations, and field data are included in appendices A through G.

2.0 SUMMARY OF RESULTS

2.1 BENZENE DRYING COLUMN EQUIPMENT

The benzene drying column vent system is illustrated in Figure 2.1. A condenser is used to further remove organics from the vent streams from the column reflux condenser and reflux decanter. The exit stream from this condenser is routed to the plant flare system. Sampling was conducted before and after this condenser at Points 1 and 2 as indicated in Figure 2.1.

Gas samples were collected simultaneously into flexible plastic bags (Tedlar) at each location. The system pressure (80 psig) was used to fill the bags. Samples were extracted through existing side-tap valves on the piping. During initial sampling attempts, condensate was observed in the sample bags. In an attempt to avoid this problem, a condenser-knockout system was added prior to the sample bag. This system consisted of the equipment normally used for moisture determination operated in an ice bath (see Figure 2.2). This modification prevented the appearance of condensate in the sample bags.

A two-phase liquid was observed in the condenser train after sampling. The lower phase was water and was used for calculation of the stream moisture content. The top phase represented condensed organics and, possibly, liquid entrainment from the stream sampled. It was observed that liquids were entrained in the flowing streams at both points. It is not possible to predict how much of the collected condensate is attributable to trapped entrained liquids and how much was due to condensation.

This liquid was recovered and analyzed. However, no attempt was made to combine these results with the vapor sample results to obtain total stream organic content.

Analyses were conducted on the bag samples to determine nonaromatics as C_1 - C_6 (species) and aromatic compounds, specifically, benzene, toluene, xylene, ethylbenzene, and styrene.

An orifice flow meter was located near Point 2. This meter was to be used for flow data, but the presence of entrained liquids in the stream resulted in erratic differential pressure levels and prevented the measurement of flow rates.

The results of gas sampling are presented in Tables 2.1 and 2.2. As discussed previously, these data represent the vapor phase compounds present after a condenser (i.e., impingers) and are potentially less than the concentrations existing in the streams. This would be due to the difference between the source and the final condenser train temperature.

The vapor sampling results are presented for C_1 - C_6 nonaromatic compounds and the indicated aromatics on the basis of benzene equivalents and as the specified compound. Two results are presented for C4 because two defined peaks were present with retention times near that of butane. Additional studies were not performed to identify these compounds specifically.

The results presented for total hydrocarbons by total HC analyzer are not representative of true concentrations. Because of the high organic concentration, the detector of the instrument was saturated. In other words, the concentration was beyond the analyzer range, and all results represent the upper limit measurable. A dilution apparatus was not available; therefore, the sample concentration could not be reduced to a level where valid results could be obtained on a total HC analyzer. The total hydrocarbons by summation of the individual species results should represent the total organics concentration in each stream.

On Run 2-2, the results for C_5 and C_6 are significatly different than the results for the other two runs. Analysis records were rechecked to comfirm the results. No reason is known for the apparently different results. The total organics in the condensate are presented in Table 2.3.

2.2 ALKYLATE DEGASSER VENT EQUIPMENT

The alkylate degasser vent equipment is illustrated in Figure 2.3. The vent stream from the degasser is first scrubbed with a polyethylbenzene solution and then is routed to a caustic scrubber along with a vent from other equipment. During the test period, there was no flow from the other equipment (Test Point 3); therefore, no measurements were performed at that location. After caustic scrubbing, the vent stream is routed to the plant flare system. The caustic solution charge to the scrubber vessel is on a batchwise basis. During sampling, no fresh caustic was added.

Gas samples were collected from the streams before and after the caustic scrubber. Grab samples of the caustic liquid were also collected during gas stream testing. The grab samples of caustic liquid were analyzed for

Na^+ and Cl^- and the results are listed in Table 2.6. Integrated samples were collected in flexible bags for organic compound analysis and inert gas analysis. In addition, samples were collected from the gas stream using a condenser train for moisture content determination. Finally, gas samples were extracted using the procedures given in Section 5 for HCl determination. The flow rate at the scrubber outlet was measured using a vane anemometer attached to the outlet of the vent to atmosphere. (Note: For sampling purposes, the scrubber outlet stream was not routed to the flare system. Instead, it was bypassed through an existing vent to atmosphere.) The inert gas analysis can be used to estimate the inlet flow rate using a nitrogen balance.

The results of gas stream analysis are summarized in Tables 2.4 and 2.5. The results of caustic liquid analysis are presented in Table 2.6.

At Point 4, there are significant differences in the results for C_4, C_5, benzene,and ethylbenzene between the two runs. Also, at Point 5, there are significant differences in C_1, C_4's,and benzene. The analysis records were rechecked to verify the results. One reason for the differences may be due to the fact that the two runs were separated by about two weeks.

2.3 CATALYST MIX TANK EQUIPMENT

The catalyst mix tank vent equipment is illustrated in Figure 2.4. The equipment included is the catalyst storage vessel and the mix tank where catalyst is dissolved in a polyethlybenzene solution. The vent gasses are essentially nitrogen purge streams that are used to inert the system. The vent stream is scrubbed with fresh polyethylbenzene solution prior to discharge to the atmosphere.

Samples were collected for organic species analysis and to determine HCl content of the vent stream. The vent flow rate was determined using a vane anemometer.

Sampling was conducted during catalyst mixing only, which is a batch process activated on an as-needed basis.

The results of testing are summarized in Table 2.7.

2.4 BENZENE-TOLUENE COLUMN VACUUM EQUIPMENT

The vacuum equipment serving the benzene-toluene separation column is illustrated in Figure 2.5. The vent stream from the reflux condenser and accumulator is first passed through a brine chilled-condenser to remove organics prior to the steam ejector. The ejector exit stream is passed

through a vacuum condenser to a hotwell. The hotwell vent stream is then passed through a final brine-chilled condenser prior to exhaust to the atmosphere.

Samples were collected from the noncondensable stream (Point 8) prior to the ejector for organic species analysis. Sampling for moisture content was attempted but was not successful because of the vacuum present at this location.

Samples were collected for organic species analysis, moisture content, and inert gas analysis at the hotwell vent before and after (Points 9 and 10, respectively) the final condenser. Flow rate measurements were performed using a vane anemometer at the vent to the atmosphere (Point 10). Because of the low flow rate and low pressure drop across the condenser, it was not possible to sample simutaneously at Points 9 and 10. Therefore, these were sampled sequentially.

The results of sampling are summarized in Tables 2.8 through 2.10. There were significant differences in the results for C_3, C_4, and C_5 between runs at Points 8, 9, and 10. The analysis records were checked to verify the results. One reason for the differences may be that the runs were sampled on different days.

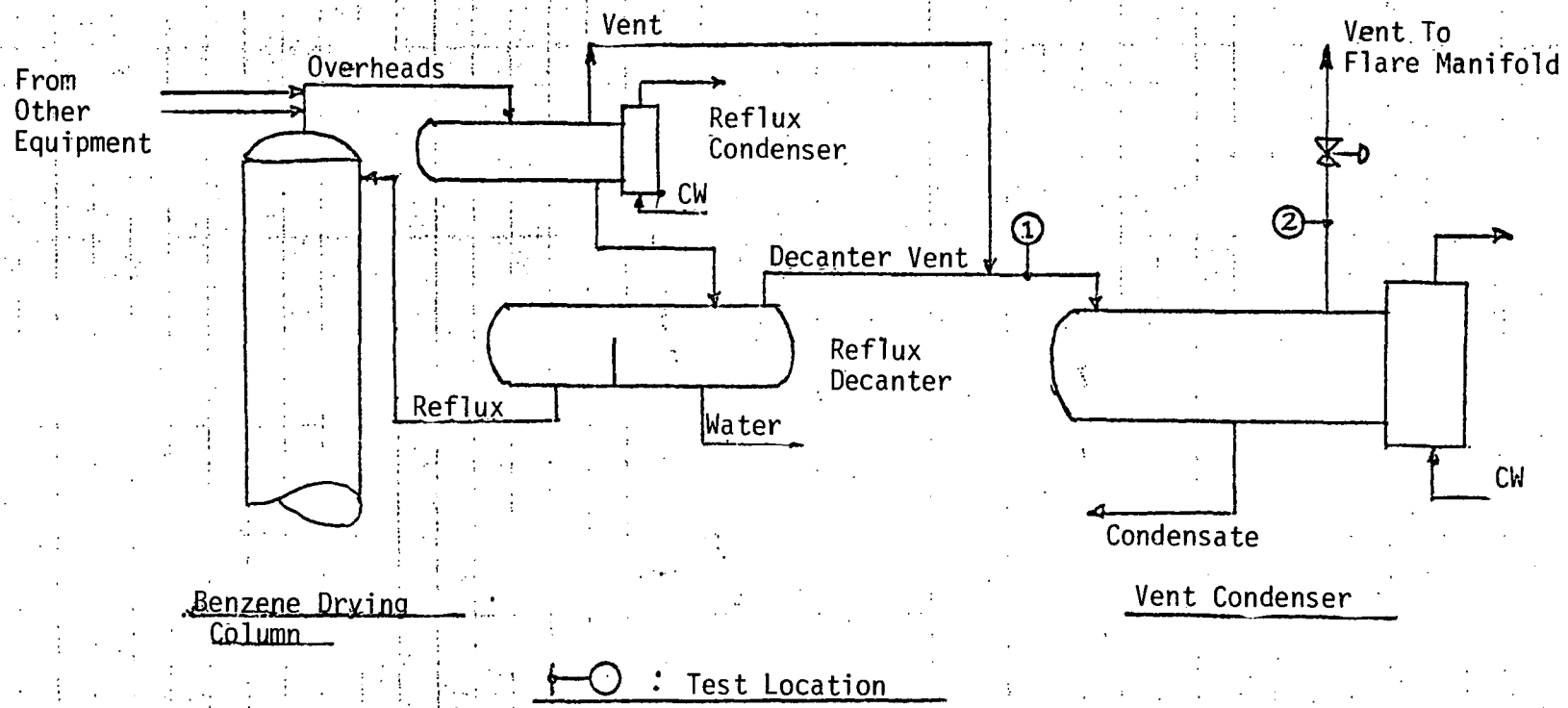

FIGURE 2.1. Benzene Drying Column Vent Equipment.

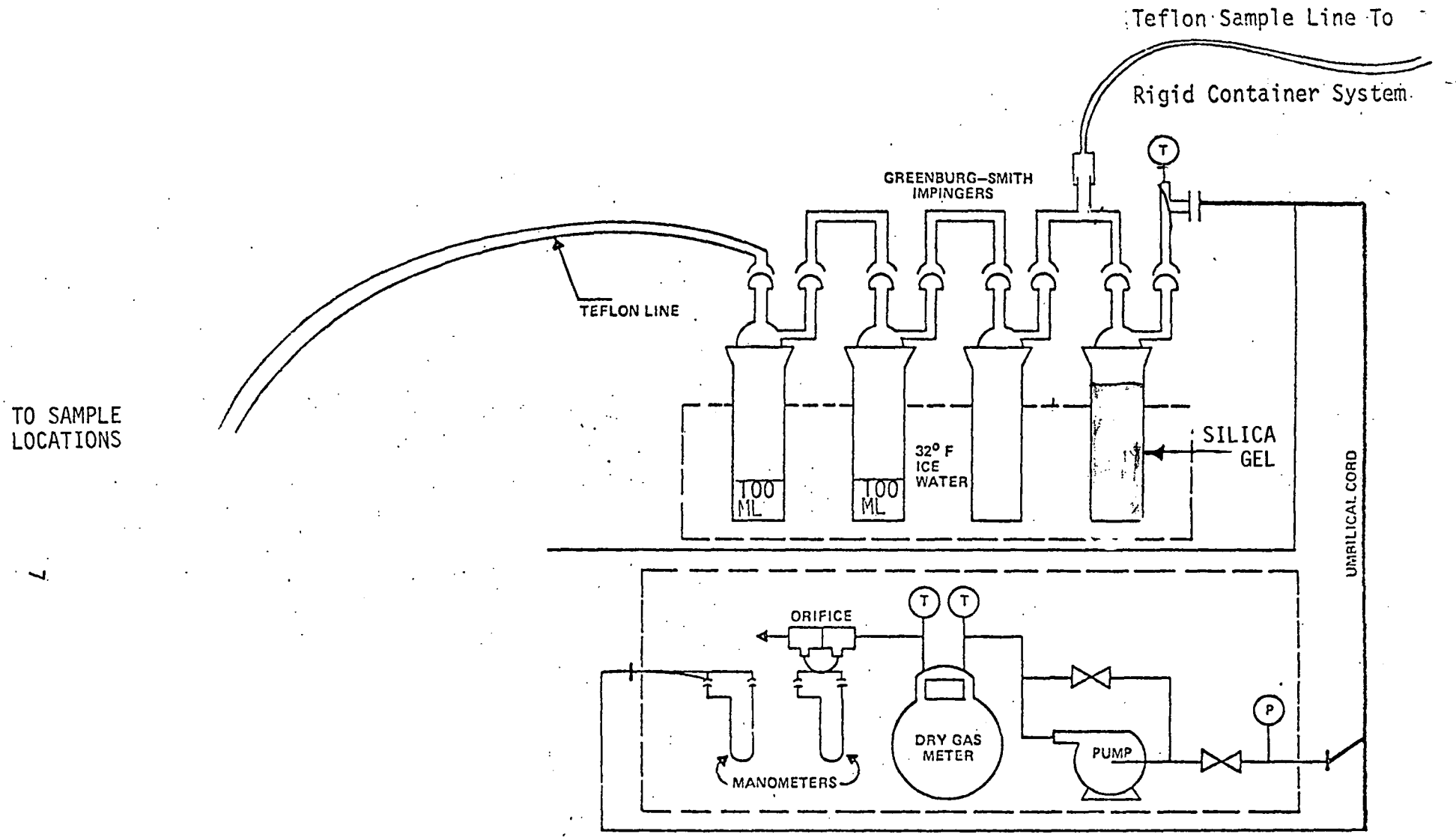

FIGURE 2.2. Modified Moisture Train.

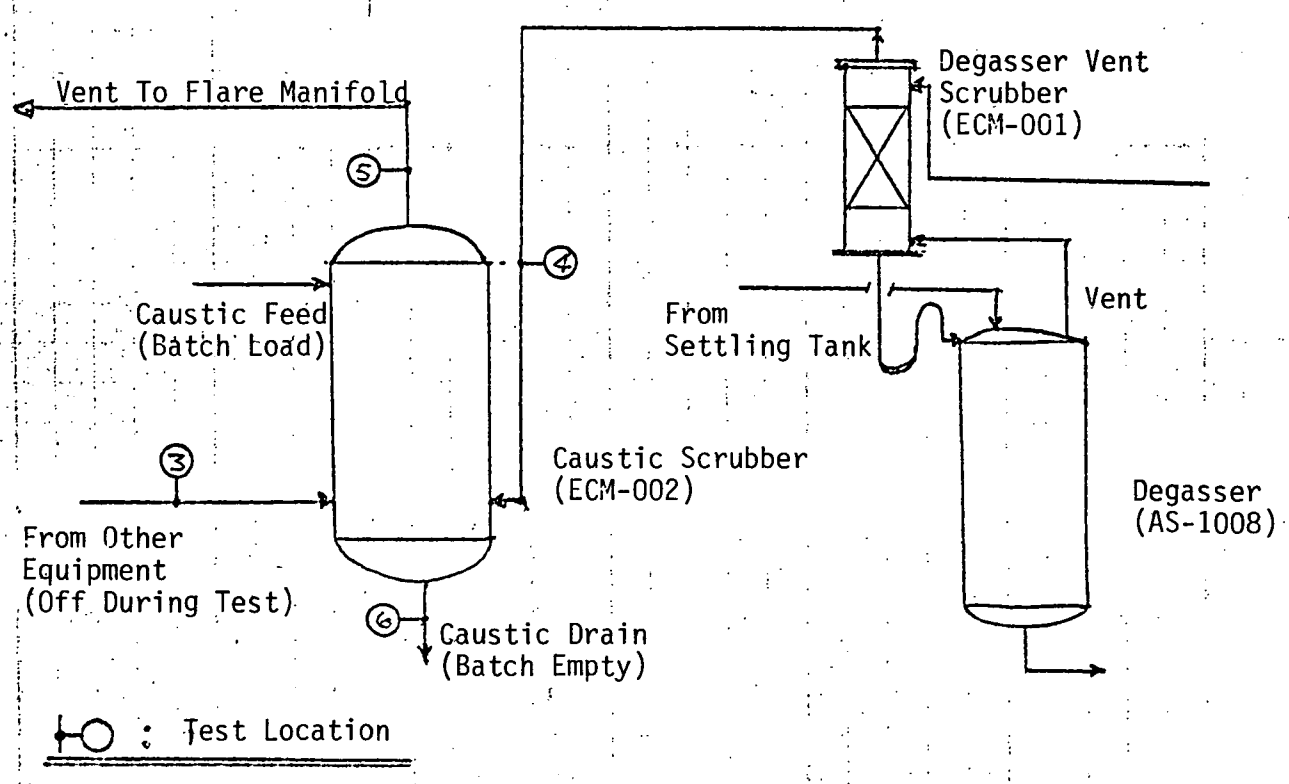

Figure 2.3. Caustic scrubber equipment.

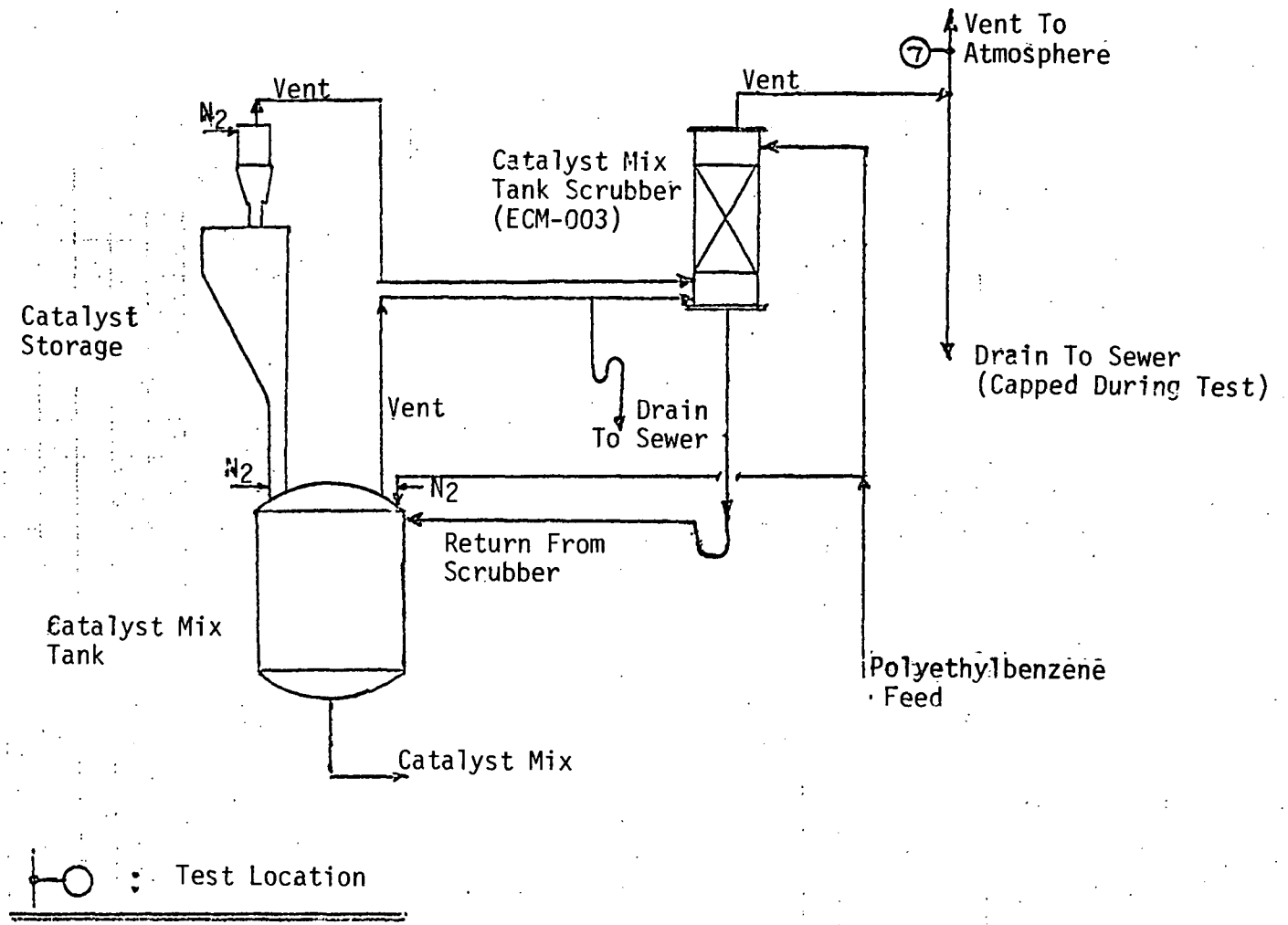

Figure 2.4. Catalyst mix tank equipment.

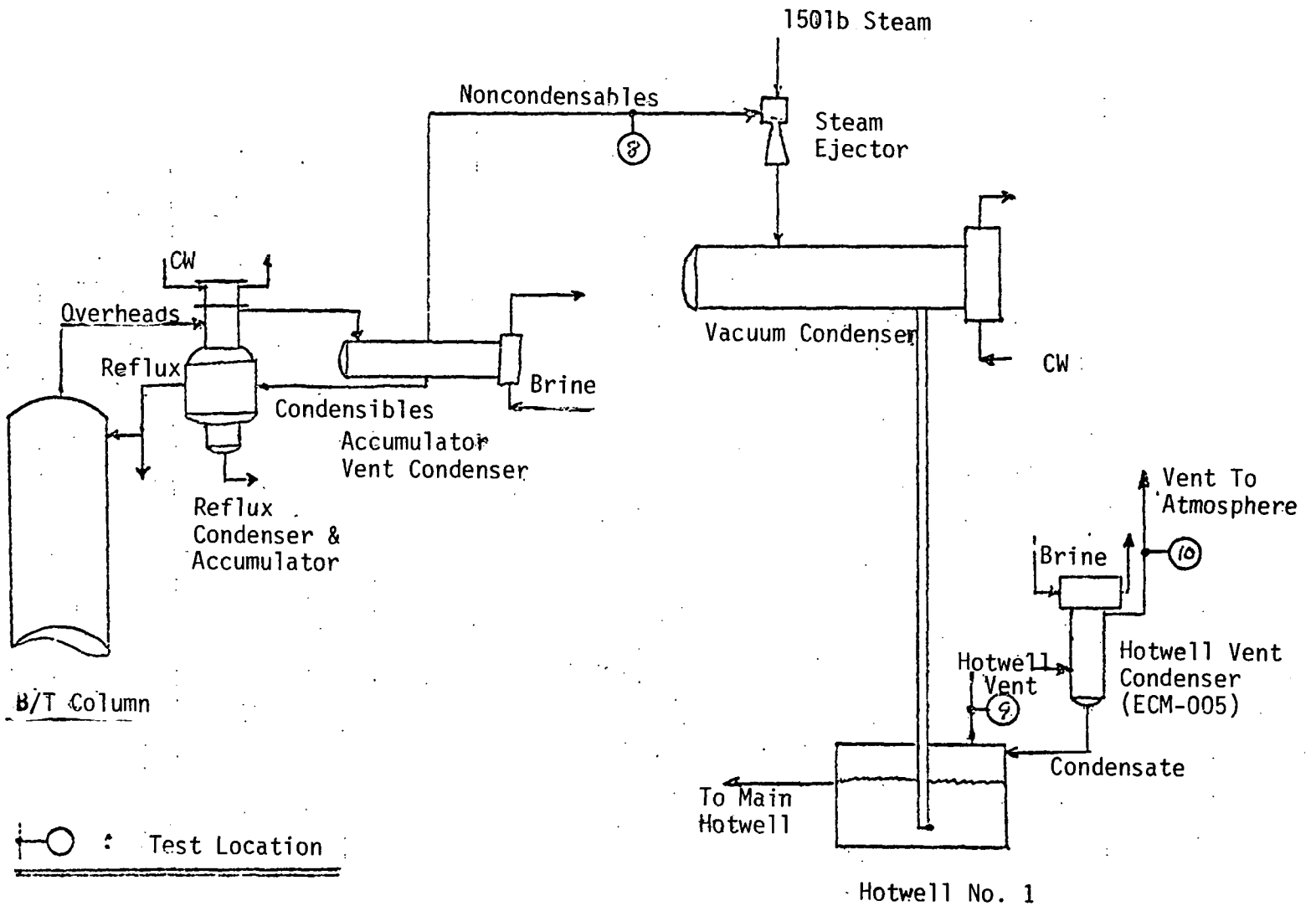

Figure 2.5. Benzene/toluene column vacuum equipment.

RUN NO. DATE TIME	1A 7/13/78 1045-1055		1B 7/13/78 1203-1213		1C 7/13/78 1437-1447	
SPECIES ANALYSIS	ppmv as compound	ppmv as benzene	ppmv as compound	ppmv as benzene	ppmv as compound	ppmv as benzene
C-1	11,025	2,613	8,925	2,155	7,350	1,742
C-1						
C-2	92,828	41,257	94,160	41,849	77,040	34,240
C-2						
C-3	3,740	2,413	3,857	2,488	3,390	2,187
C-3						
C-4	348,970	266,389	381,957	291,570	347,230	265,061
C-4	840,306	641,455	854,196	652,058	774,332	591,093
C-5	9,552	9,552	7,671	7,671	9,408	9,408
C-5						
C-6	23,808	28,564	30,087	36,097	42,645	51,164
C-6						
BENZENE	28,185	28,185	13,529	13,529	28,185	28,185
ETHYLBENZENE			18.71	12.86		
TOTAL HYDROCARBONS BY:						
SPECIES SUMMATION	1,358,414	1,020,428	1,394,401	1,047,389.86	1,289,580	983,080
TOTAL HC ANALYZER	--	n/m	--	n/m	--	n/m
INERTS AND FLOW DATA						
H_2O, % by volume	0	0	0	0	0	0
N_2, % by volume						
O_2, % by volume						
CO_2, % by volume						
Flow rate, scfm,* dry						
HCl, ppmv		n/m	n/m		n/m	
TOTAL						
n/m = not measured * = 20°C atm., wet						

Table 2.1. Results of Gas Sampling Analysis-Test Point #1
Vent Condenser Inlet

RUN NO. DATE TIME	2-1 7/13/78 1045-1055		2-2 7/13/78 1203-1213		2-3 7/13/78 1437-1447	
SPECIES ANALYSIS	ppmv as compound	ppmv as benzene	ppmv as compound	ppmv as benzene	ppmv as compound	ppmv as benzene
C-1	73,500	17,417	78,750	18,661	68,250	16,173
C-1						
C-2	194,027	86,234	178,809	79,750	155,982	69,325
C-2						
C-3	2,104	1,357	2,992	1,885	2,571	1,659
C-3						
C-4	149,377	114,028	164,936	125,905	147,574	112,652
C-4	291,677	222,654	307,302	234,582	281,260	214,702
C-5	2,316	2,316	50,657	50,657	2,460	2,461
C-5						
C-6	17,660	21,188	746,935	896,143	37,085	44,493
C-6						
BENZENE	16,911	16,911	23,675	23,675	23,675	23,675
ETHYLBENZENE						
TOTAL HYDROCARBONS BY:						
SPECIES SUMMATION	747,572	482,105	1,554,056	1,430,979	578,857	485,140
TOTAL HC ANALYZER	--	n/m	--	n/m	--	n/m
INERTS AND FLOW DATA						
H_2O, % by volume N_2, % by volume O_2, % by volume CO_2, % by volume Flow rate, scfm,* dry HCl, ppmv TOTAL	n/m	n/m	n/m	n/m	n/m	n/m
n/m = not measured * = 20°C atm., wet						

Table 2.2 Results of Gas Sampling Analysis- Test Point #2
Vent Condenser Inlet

LOCATION	CONDENSER INLET (POINT 1)			CONDENSER OUTLET (POINT 2)		
RUN NO.	1	2	3	1	2	3
COMPOUND		WEIGHT %			WEIGHT %	
C_5	9.7	8.3	12.9			
BENZENE	90.3	91.7	87.1		(INSUFFICIENT SAMPLE)	
TOLUENE	<0.1	<0.1	<0.1			
ETHYLBENZENE	<0.1	<0.1	<0.1			
STYRENE	<0.1	<0.1	<0.1			
VOLUME OF CONDENSATE (ml)	95	92.5	82	3	1.5	1.5
GAS VOLUME SAMPLED (liters)	10.0	10.0	10.0	10.0	10.0	10.0

Table 2.3. Summary of Results of Species Analysis- Organic Condensate at Points 1 and 2.

RUN NO. DATE TIME	4-1 6/28/78 1045-1100		4-2 7/11/78 1031-1046		AVERAGE	
SPECIES ANALYSIS	ppmv as compound	ppmv as benzene	ppmv as compound	ppmv as benzene	ppmv as compound	ppmv as benzene
C-1	8,099	1,919	8,050	1,908	8,075	1,914
C-1						
C-2	8,300	3,689	11,355	5,047	9,828	4,382
C-2						
C-3	--	--	--	--	--	--
C-3						
C-4	504	385	5,546	4,234	3,025	2,310
C-4	3,454	2,637	64,646	49,348	34,050	25,993
C-5	5,970	5,970	4,713	4,713	5,342	5,342
C-5						
C-6	252,188	302,565	64,527	77,417	158,358	189,991
C-6						
BENZENE	59,601	59,601	14,374	14,374	36,988	36,988
ETHYLBENZENE						
TOTAL HYDROCARBONS BY:						
SPECIES SUMMATION	338,116	376,766	173,211	157,041	255,666	266,920
TOTAL HC ANALYZER	--	n/m	--	n/m	--	n/m
INERTS AND FLOW DATA						
H_2O, % by volume	19.69		22.77		21.23	
N_2, % by volume	42.6		42.6		42.6	
O_2, % by volume	7.12		7.78		7.45	
CO_2, % by volume	0		0		0	
Flow rate, scfm,*dry						
HCl, ppmv	53.0		53.7		53.4	
TOTAL	69.41		73.15		71.28	

n/m = not measured
* = 20°C atm., wet

Table 2.4. Results of Gas Sampling Analysis - Test Point #4
Caustic Scrubber Inlet

RUN NO. DATE TIME	5-1 6/28/78 1045 - 1100		5-2 7/11/78 1031 - 1046		AVERAGE	
SPECIES ANALYSIS	ppmv as compound	ppmv as benzene	ppmv as compound	ppmv as benzene	ppmv as compound	ppmv as benzene
C-1	288	68	3,325	788	1,806	428
C-1						
C-2	4,427	1,968	4,367	1,941	4,397	1,955
C-2						
C-3	--	--	--	--	--	--
C-3						
C-4	300	229	2,377	1,814	1,338	1,022
C-4	1,956	1,493	8,715	6,653	5,336	4,073
C-5	3,881	3,881	2.062	2,062	2,972	2,972
C-5						
C-6	48,012	57,603	42,284	50,731	45,148	54,167
C-6						
BENZENE	56,670	56,670	9,856	9,856	33,263	33,263
ETHYLBENZENE						
TOTAL HYDROCARBONS BY:						
SPECIES SUMMATION	115,534	121,912	72,986	73,845	94,260	97,880
TOTAL HC ANALYZER	n/m	n/m	n/m	n/m	n/m	n/m
INERTS AND FLOW DATA						
H_2O, % by volume	17.3		18.2		17.75	
N_2, % by volume	43.2		n/m		43.2	
O_2, % by volume	3.08		n/m		3.08	
CO_2, % by volume						
Flow rate, scfm*	176.1		176.2		176.2	
HCl, ppmv	0		0		0	
TOTAL	63.58		--		64.03	

n/m = not measured
* = 20°C atm., wet

Table 2.5. Results of Gas Sampling Analysis - Test Point #5
Caustic Scrubber Inlet

RUN NO.	1	2	3	4 [a]
DATE/TIME	6/28/78	6/28/78	6/28/78	6/28/78
COMPOUND (ORGANICS)				BLANK RUN
TOTAL Na^+,mg/ml	161	159	[b]Run	0.03
TOTAL Cl^--ppm by weight	34,000			

[a]Run 4 was used as a blank and calculated into the results.
[b]Insufficient sample collection.

TABLE 2.6. Summary of Results of Caustic Scrubber Liquid Analysis Test Point 6.

RUN NO. DATE TIME	7-1 6/21/78 1005-1020		7-2 6/21/78 1030-1050		7-3 6/22/78 1051-1111	
SPECIES ANALYSIS	ppmv as compound	ppmv as benzene	ppmv as compound	ppmv as benzene	ppmv as compound	ppmv as benzene
C-1	49.4	11.7	27.8	6.59	17.0	4.03
C-1						
C-2	7.2	3.2	7.0	3.11	4.6	2.04
C-2	60.1	26.7	65.5	29.11	43.7	19.42
C-3	2.5	1.6	1.2	.77	2.3	1.48
C-3						
C-4	.70	.53	.3	.23		
C-4						
C-5						
C-5						
C-6						
C-6						
BENZENE	33.2	33.2	57.2	57.2	7.0	7.0
ETHYLBENZENE						
TOTAL HYDROCARBONS BY:						
SPECIES SUMMATION	153.1	76.93	159.0	97.01	74.6	33.97
TOTAL HC ANALYZER						
INERTS AND FLOW DATA						
H_2O, % by volume	n/m		n/m		n/m	
N_2, % by volume						
O_2, % by volume						
CO_2, % by volume						
Flow rate, scfm*	7.4		7.0		6.6	
HCl, ppmv	70.4		74.2		68.7	
TOTAL						
n/m = not measured * = 20°C atm., wet						

Table 2.7. Results of Gas Sampling Analysis - Test Point #7
Catalyst Mix Tank Vent

RUN NO. DATE TIME	8-1 7/13/78 1202-1213		8-2 7/13/78 1630-1631		8-3 7/13/78 1654-1655	
SPECIES ANALYSIS	ppmv as compound	ppmv as benzene	ppmv as compound	ppmv as benzene	ppmv as compound	ppmv as benzene
C-1	78,750	18,661	78,750	18,661	115,500	27,370
C-1						
C-2	34,240	15,218	45,683	20,290	50,409	22,404
C-2	6,848	3,044	7,609	3,323	9,987	4,439
C-3	18,701	12,065	7,692	4,931	22,675	14,629
C-3						
C-4	15,626	11,928	25,653	20,277	32,466	24,783
C-4			108	83	174	132
C-5	6,513	6,513	4,523	4,523	5,138	5,138
C-5						
C-6			14,438	17,322	103,341	123,984
C-6						
BENZENE	54,114	54,114	62,006	62,006	36,076	36,076
ETHYLBENZENE	------	------	------	------	------	------
TOTAL HYDROCARBONS BY:						
SPECIES SUMMATION	214,792	121,543	246,462	151,416	375,766	258,955
TOTAL HC ANALYZER						
INERTS AND FLOW DATA						
H_2O, % by volume	n/m		n/m		n/m	
N_2, % by volume						
O_2, % by volume						
CO_2, % by volume						
Flow rate, scfm,* dry	n/m		n/m		n/m	
HCl, ppmv						
TOTAL						
n/m = not measured * = 20°C atm., wet						

Table 2.8. Results of Gas Sampling Analysis - Test Point #8
Noncondensables to Steam Ejector

RUN NO. DATE TIME	9-1 6/22/78 1631-1646		9-2 6/23/78 0950-1005		9-3 6/26/78 1058-1115	
SPECIES ANALYSIS	ppmv as compound	ppmv as benzene	ppmv as compound	ppmv as benzene	ppmv as compound	ppmv as benzene
C-1	34,528	8,182	30,163	7,148	34,630	8,206
C-1						
C-2	45,756	20,336	39,840	17,707	37,840	16,818
C-2	14,536	6,460	11,952	5,312	8,632	3,836
C-3	2,390	1,542	17,630	11,374	22,766	14,688
C-3						
C-4	33,585	25,637	26,046	19,882	39,196	29,921
C-4						
C-5	16,000	16,000	10,880	10,880	9,355	9,355
C-5						
C-6	85,245	102,273	63,377	76,037		
C-6						
BENZENE	27,245	27,245	30,439	30,439	24,427	24,427
ETHYLBENZENE						
TOTAL HYDROCARBONS BY:						
SPECIES SUMMATION	259,285	207,675	230,327	178,779	176,846	107,251
TOTAL HC ANALYZER						
INERTS AND FLOW DATA						
H_2O, % by volume	28.41		20.95		57.12	
N_2, % by volume	29.0		20.6			
O_2, % by volume	6.25		2.68			
CO_2, % by volume	21.45		25.2			
Flow rate, scfm,*dry	n/m		n/m		n/m	
HCl, ppmv						
TOTAL	85.11		69.43			

n/m = not measured
* = 20°C atm., wet

Table 2.9 Results of Gas Sampling Analysis - Test Point #9
Inlet of Hotwell Vent Condenser

RUN NO.	AVERAGE FT/MIN	T_s	AREA ANEMOMETER (F^2)	FLOW ACFM	FLOW SCFM 20°C, 1 atm	FLOW DSCFM
5-1	2,123	95	.0873	185.3	176.1	145.7
5-2	2,083	84	.0873	181.8	176.2	144.2
10-1	137.0	80	.0873	12.0	11.6	9.6
10-2	86.7	70	.0873	7.6	7.6	6.4
10-3	99.3	75	.0873	8.7	8.7	7.1
7-1	87.2	85	.0873	7.6	7.4	
7-2	82.4	85	.0873	7.2	7.0	
7-3	78.4	85	.0873	6.8	6.6	

Table 2.11. Gas Flow Calculations Test Points 5, 7, 10.

RUN NO. DATE TIME	10-1 6/22/78 1631-1646		10-2 6/26/78 0920-0935		10-3 6/26/78 1015-1040	
SPECIES ANALYSIS	ppmv as compound	ppmv as benzene	ppmv as compound	ppmv as benzene	ppmv as compound	ppmv as benzene
C-1	37,667	8,926	29,002	6,824	26,880	6,370
C-1						
C-2	46,849	20,822	39,176	17,412	29,216	12,985
C-2	13,998	6,221	10,624	4,722	7,968	3,541
C-3	2,410	1,555	17,630	11,374	16,126	10,404
C-3						
C-4	36,049	27,518	25,507	19,471	24,547	18,738
C-4						
C-5	15,543	15,543	4,960	4,960	5,748	5,748
C-5						
C-6	37,374	44,840	73,242	87,873	No Data	No Data
C-6						
BENZENE	21,608	21,608	32,694	32,694	No Data	No Data
ETHYLBENZENE						
TOTAL HYDROCARBONS BY:						
SPECIES SUMMATION	211,498	147,033	232,835	185,330	110,485	57,786
TOTAL HC ANALYZER						
INERTS AND FLOW DATA						
H_2O, % by volume	16.07		17.82		19.1	
N_2, % by volume	19.7		35.3		n/m	
O_2, % by volume	5.54		8.12		n/m	
CO_2, % by volume	18		19.5		n/m	
Flow rate, scfm *	11.6		7.6		8.7	
HCl, ppmv						
TOTAL	59.31		80.74		76.89	

n/m = not measured
* = 20°C atm., wet

Table 2.10 Results of Gas Sampling Analysis - Test Point #9 - Outlet from Hotwell Vent Condenser

3.0 PROCESS DESCRIPTION

The Cos-Mar plant has two integrated ethylbenzene/styrene units producing ethylbenzene by benzene alkylation and styrene by ethylbenzene dehydrogenation. Both units use the conventional process technology described in available literature. The testing was performed on the No. 2 unit, which had a rated capacity of $700(10)^6$ lb/yr styrene. During all periods of actual testing, the No. 2 unit was operating between 90 and 100 percent of its capacity.

4.0 LOCATION OF SAMPLING POINTS

The locations from which samples were collected in each system tested have been identified in Chapter 2. In this section, the physical configuration of each location is described and the general stream characteristics are discussed. The location identification numbers correspond to those referenced throughout this report.

4.1 BENZENE DRYING COLUMN VENT EQUIPMENT (Points 1 and 2 on Figure 2.1)

Both points on the benzene drying column were at elevated pressure. Point 1 was approximately 90 PSIG and Point 2 was 63 PSIG. All pipe was schedule 80 pipe. The pressure of the stream was used to push the sample throught the sampling apparatus. No pump was needed. As can be seen from Figure 4.1, the plant had installed a flow measuring orifice in the pipe before Point 2. This orifice was ineffective due to the entrained liquid discussed earlier.

Prior to sampling, the residual liquid in both Points 1 and 2 was purged for a minute or two to purge accumulated liquids from the sample taps. The sample line was then connected and the sample was taken.

4.2 CAUSTIC SCRUBBER EQUIPMENT (Points 4, 5, and 6 on Figure 2.3)

Points 4 and 5 represent the inlet and outlet of the caustic scrubber. Both Points 4 and 5 were under slight positive pressure. Normally, the scrubber outlet stream is routed to the plant flare system; however, for testing, this stream was diverted through an existing vent to atmosphere. A sampling line was connected directly to Point 4 while it was inserted into the 2-inch diameter hole for Point 5 (Figure 4.2). Point 6 was a liquid sample point.

4.3 CATALYST MIX TANK EQUIPMENT
(Point 7 on Figure 2.4)

Point 7 was the vent for the catalyst mix tank. The vent was at the 70-foot level and is normally exhausted 5 feet in the air from the platform. At TRW's request, the vent was manipulated so the vent end was accessible to the samplers on the platform. The pipe was 4 inches in diameter and was sampled by inserting the sampling line into the open pipe (Figure 4.3). Before sampling could occur, the line below (drain to sewer) had to be closed to force the flow up the vent pipe.

4.4 BENZENE/TOLUENE COLUMN VACUUM EQUIPMENT
(Points 3, 9, 10 on Figure 2.5)

Point 8 was on the noncondensable line and was normally under a vacuum of 27 inches of mercury. An existing valve was used to extract the sample.

Points 9 and 10 were at essentially barometric pressure. An existing valve was used to extract a sample at Point 9, and the sample line was inserted into the open pipe at Point 10. See Figure 4.4 for the equipment setup at Points 8, 9, and 10.

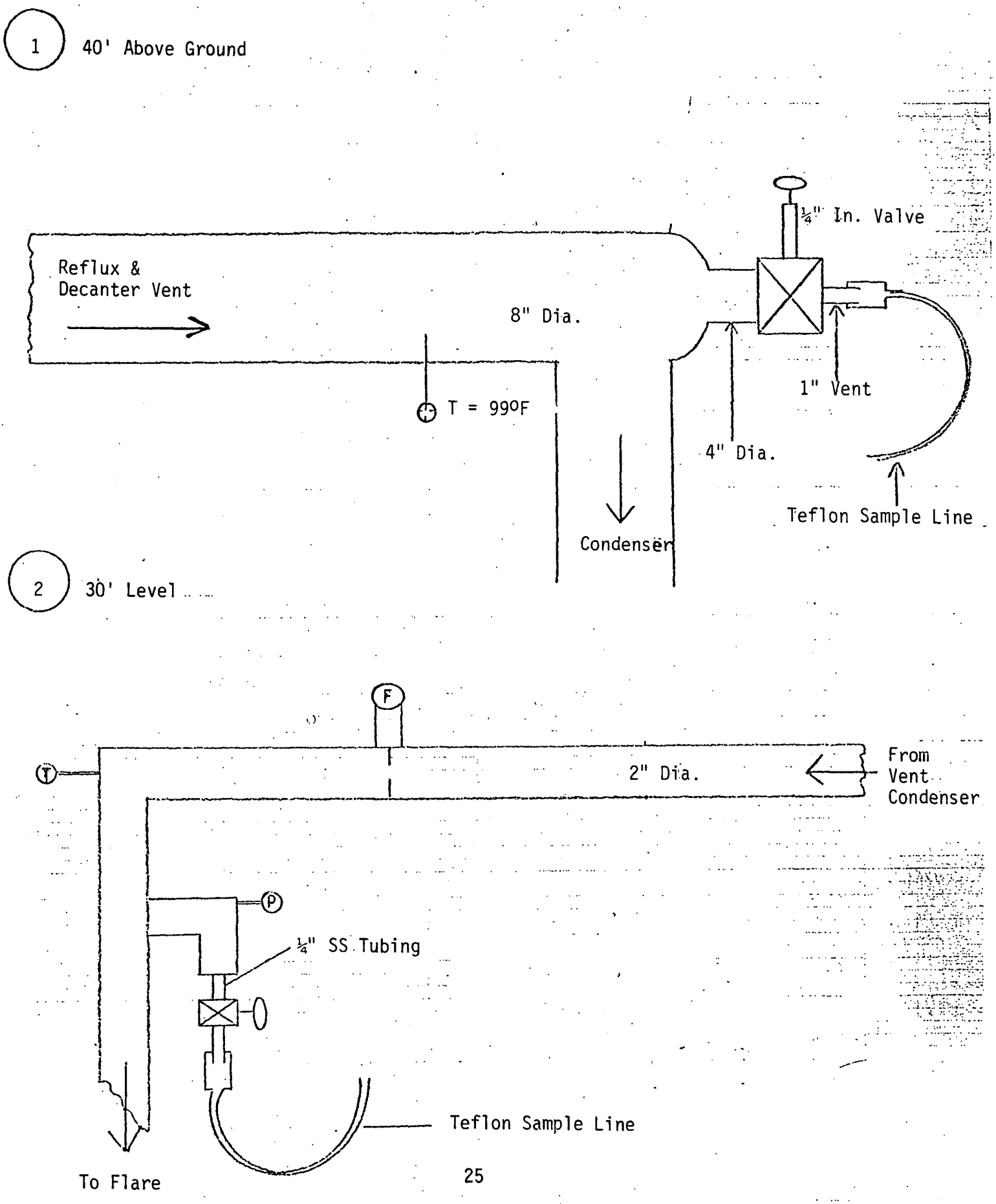

FIGURE 4.1. Benzene drying column vent equipment

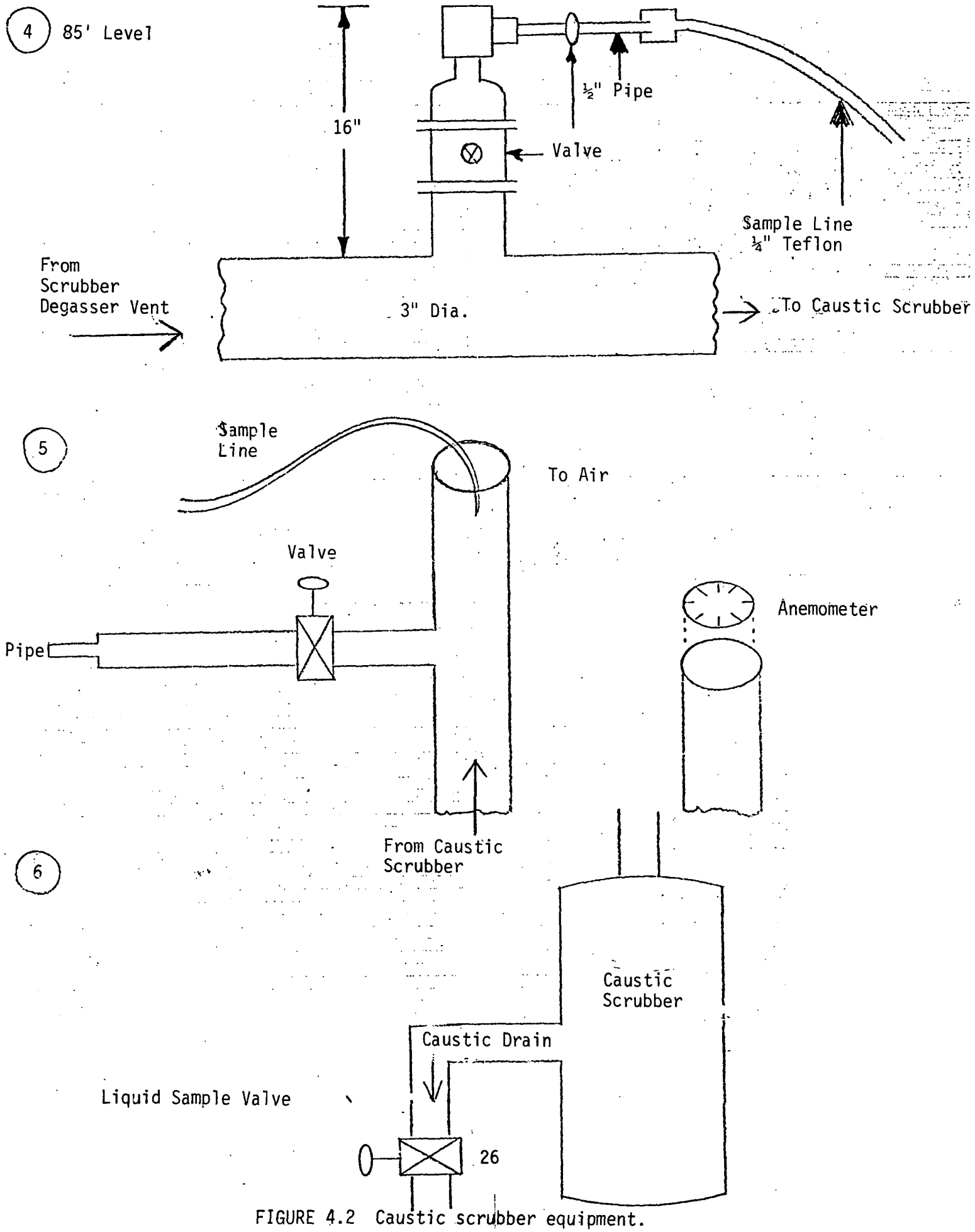

FIGURE 4.2 Caustic scrubber equipment.

7

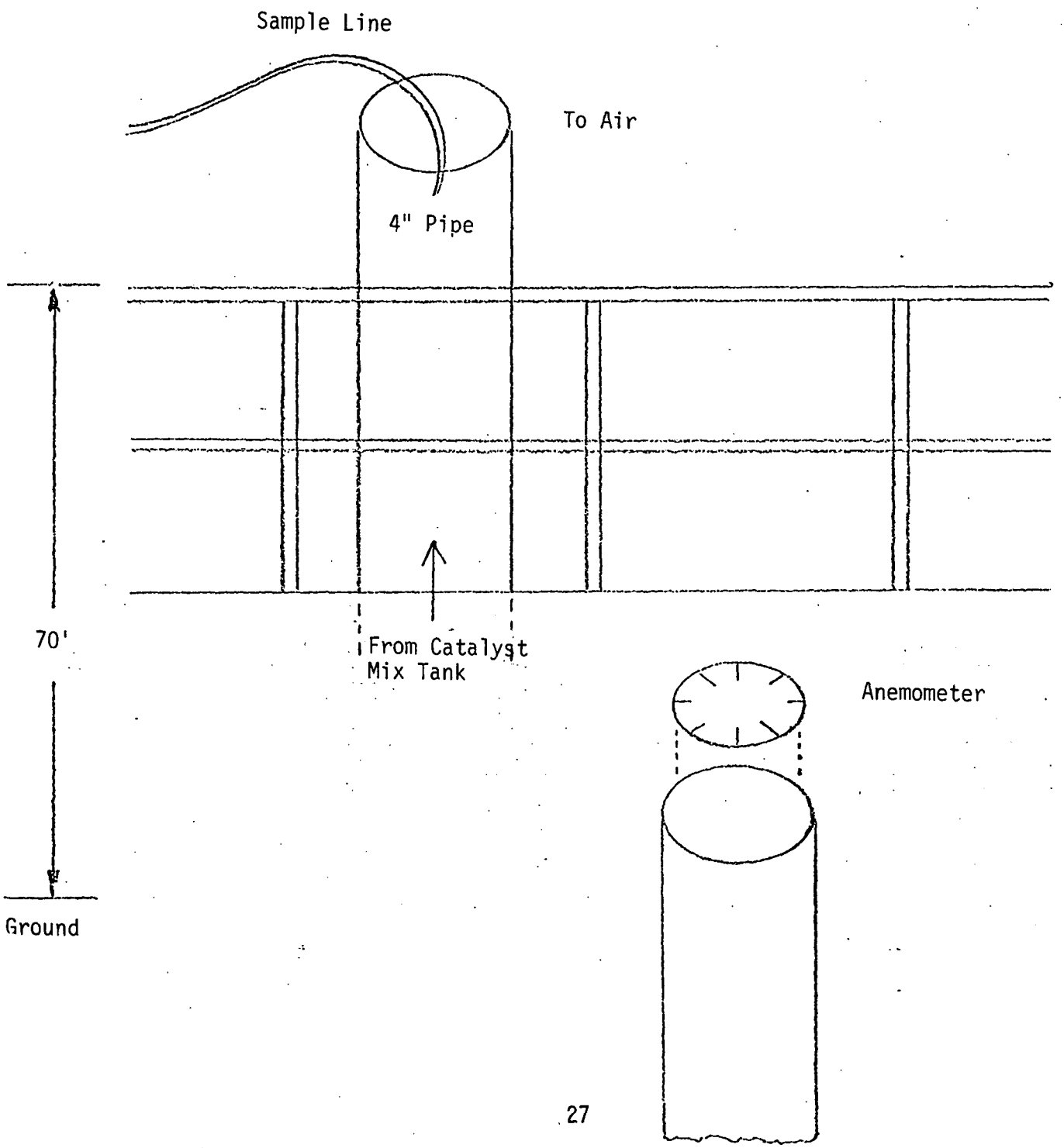

FIGURE 4.3. Catalyst mix tank equipment.

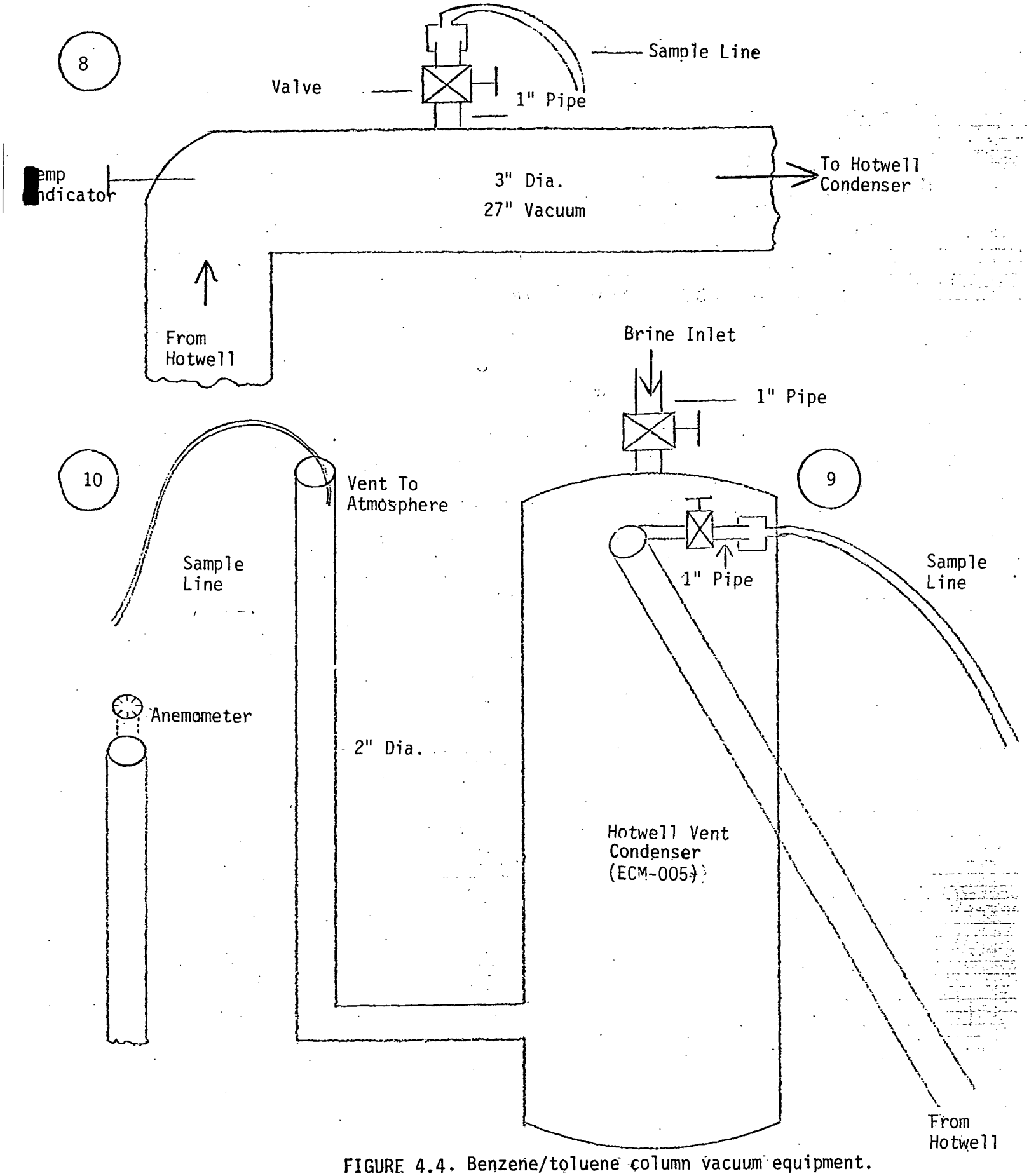

FIGURE 4.4. Benzene/toluene column vacuum equipment.

5.0 SAMPLING AND ANALYSIS PROCEDURE

5.1 BAG SAMPLING AND ORGANIC SPECIES ANALYSIS

The sampling system used for collection of a gas sample into a flexible container is shown in Figure 5.1. In all cases the flexible bag was placed inside a rigidly sealed container. The methods used to fill the bags depended on the pressure of the source gas. At Points 1 and 2, bags were filled by source pressure. At Points 4, 5, 7, 9, and 10, an explosion-proof pump was used to evacuate the rigid container to about 20" Hg vacuum. At Point 8, the rigid container was evacuated to approximately 29" Hg vacuum prior to sampling. The container was evacuated and leak checked before being placed at the test site. Once at the test site, the Teflon sampling lines were connected to the sample points, and the values were opened slightly to produce the desired sampling rate (2 liters per minute). Once a sufficient sample was extracted, the container was removed to the laboratory where it was immediately given to the analyst for processing on the gas chromatograph. Sampling rates were set based on flow valve setting calibrations prior to testing. In some cases, the variability in source pressure (absolute) rigid container flow restriction or imprecision of initial flow settings prevented continuation of sampling for the desired interval. Because of these variations, the duration of actual sampling varies from run to run.

In all tests except those at Points 1 and 2, the sample line was connected directly to the valve or open pipe that was to be sampled. At Points 1 and 2, the bag sampling systems were connected to the outlet of a condenser train where a side stream was removed.

The bag was run on four separate gas chromotagraphs;

1) Benzene and higher molecular weight hydrocarbons.
   -Dual FID Shimadzu GC Mini 1 with 5 percent OV-101 and Bentone 34 - 100/120 mesh
2) Total hydrocarbons
   -AID Portable FID GC with no column
3) C_1 - C_6 (Low molecular weight HC).
   -Dual FID Shimadzu GC Mini 1 with a poropak Q column.
4) Stationary Gases - O_2, N_2, CO_2, CO
   -Shimadzu 3BT Dual Thermal Conductivity with a Chromosorb 102 and molecular seive 5x columns.

The gases were run on these instruments consecutively and the results were recorded on a linear recorder with a integrator. In all cases, the analysis was done within 4 hours of sampling.

The audit gases were supplied by EPA and were the only standards available during the first week of testing. After the first week, standards for benzene and toluene were shipped to the site. As can be seen from the audit gas report, the concentrations of the audit gases and the standards were very close. The ethylbenzene and styrene standards were not available during the test period. Liquid samples were used to determine the retention time. This provided information as to the presence of ethylbenzene and styrene but was not definitive as to the amount.

5.2 MOISTURE

A condenser train (Figure 5.2) was used to obtain moisture results. The procedures used are described in EPA Method 4 (40CFR60 Appendix B) except that larger impingers were used, followed by a silica gel absorbent. Concurrent with collection of the water in the samples, organics were condensed as evidenced by the formation of a lighter liquid layer over the water in the impingers. The two liquid layers were separated, with the water phase being used for moisture content in the source stream and the organic layer being retained for analysis. At Sample Locations 4, 5, 7, 8, 9, and 10 the organics collected were analyzed and reported in Appendix C, but are not reported in the summary of results because the organics were included in the integrated bag sample results.

At Points 1 and 2, the bag samples were extracted after the condenser, and thus the collected organic condensate is a portion of the sample. The contribution of the liquids is summarized in Chapter 2.

5.3 HYDROGEN CHLORIDE

HCl was determined at Points 4, 5, and 7 using 1N NaOH as a collection media and a silver nitrate/potassium thiocyonate titration analysis. The complete procedure is included in Appendix E. During collection of the sample, using a modified EPA Method 6 train, organics were condensed. Analysis for HCl was performed on the water fraction after separation of the phases. No attempt was made to analyze the organic layer for HCl. To determine if dissolved organics in the water would interfere with HCl determination, benzene was added to blank solutions and analyzed. No interference was observed.

5.4 ORGANIC LIQUID SAMPLE ANALYSIS

The samples were run on a Shimadzu 6AM gas chromatograph equipped with dual-column FID with a two-meter glass column packed with 3-percent OV-101 on 80/100 mesh Gas Chrom R. A linear integrating recorder was used to record data.

Standards of the aromatics of interest were run in the concentration range of 1 percent, 10 percent, and 50 percent in pentane. Each concentration is run at an appropriate range and sensitivity of .32V and 10^3 for the 50 percent. The resulting integrated area for each standard in each concentration range was obtained from the chart recorder. The integrated area for each aromatic of interest for each sample was obtained. A linear relationship between area and concentration is assumed for each concentration range (0.1 to 4 percent), (4 to 20 percent), (20 to 100 percent) and the following relationship used to calculate the unknown concentration:

$$\text{Concentration of unknown (\%)} = \frac{\text{Area of Unk x Conc. of Std.}}{\text{Area of Std.}}$$

The samples were stored for approximately four months prior to analysis. A long sample holding time and room temperature storage introduces several uncertainties into the analysis for aromatic compounds.

Aromatics are only slightly soluble in water, so aqueous samples held in nongas-tight containers at ambient temperatures are subject to possible losses. Similar problems are possible in the nonaqueous samples since losses of components are a function of their vapor pressures at ambient conditions. Thus, losses are more pronounced in the lower boiling constituents, making relative concentrations change in the total sample.

Chemical changes, especially in unsaturated compounds like styrene, can result in oxidation. This can further affect relative concentrations since the oxidation products are not extracted as efficiently in extraction steps.

Samples such as those from Point 8 containing less than 5 milliliters are particularly susceptible to headspace losses because the large gas-to-liquid ratio in the container allows saturation of a larger gas volume with vapor. This could change the relative concentrations in a small liquid volume.

5.5 CAUSTIC SOLUTION SAMPLE ANALYSIS

The liquid collected at Point 6 was analyzed by the procedure described above for organics content.

Total sodium and chloride were determined using atomic absorbtion.

5.6 VOLUMETRIC FLOW RATE

A Rochester G-694 vane anemometer was used to determine the velocity of the vent streams at Points 5, 7, and 10. Since the pipes were smaller in diameter than the anemometer, an expansion adaptor was fabricated. (The area of the anemometer face was used to calculate volumetric flow rate.) The calibration data show that the length of the expansion section was not enough to have fully developed flow at the anemometer; therefore, a correction was used. The anemometer was calibrated using this configuration. The calibration apparatus and results are presented in Figure 5.6.1. The gas flow calculations are presented in Appendix A.

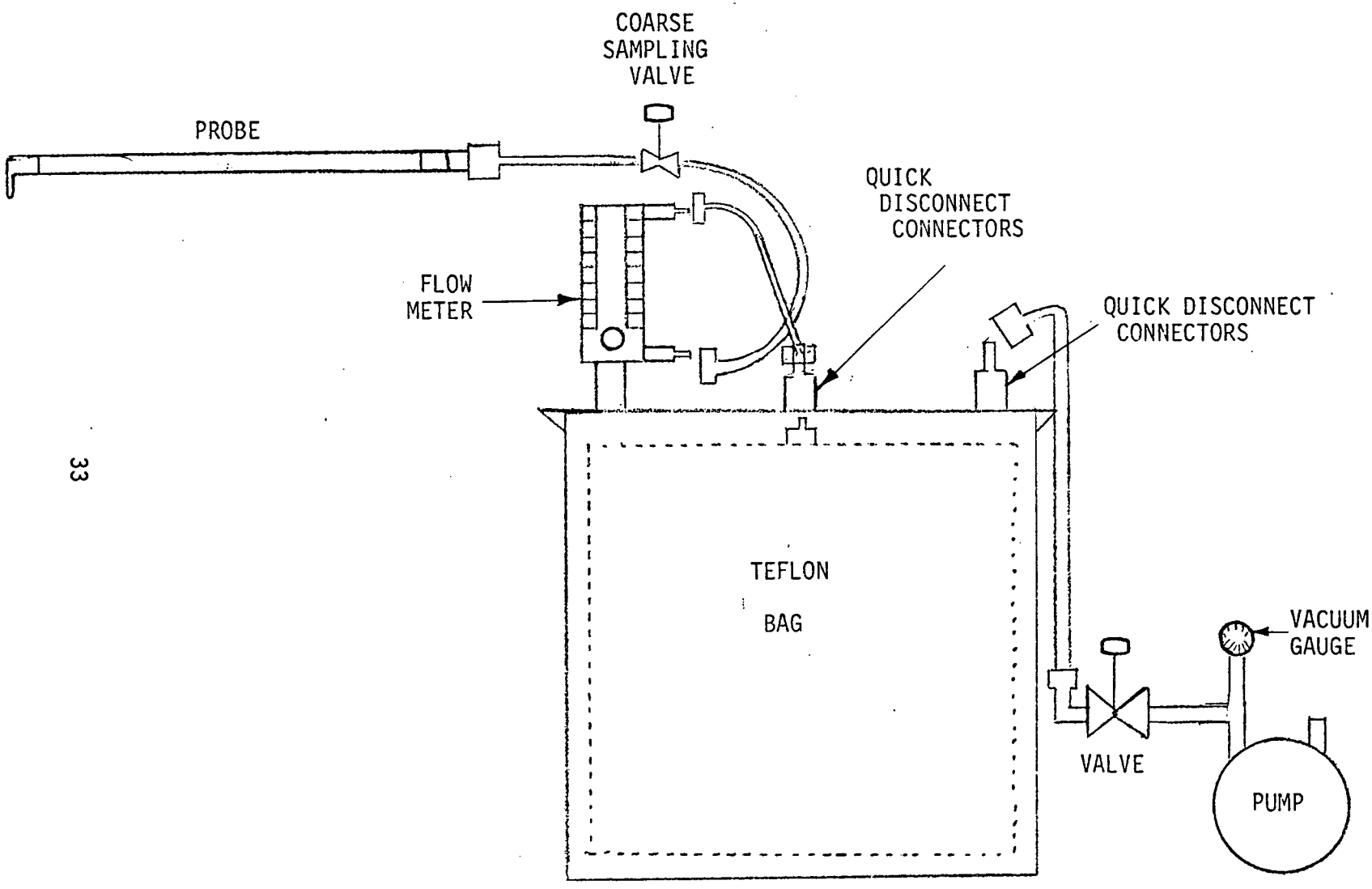

FIGURE 5.1. Modified gas sampling apparatus.

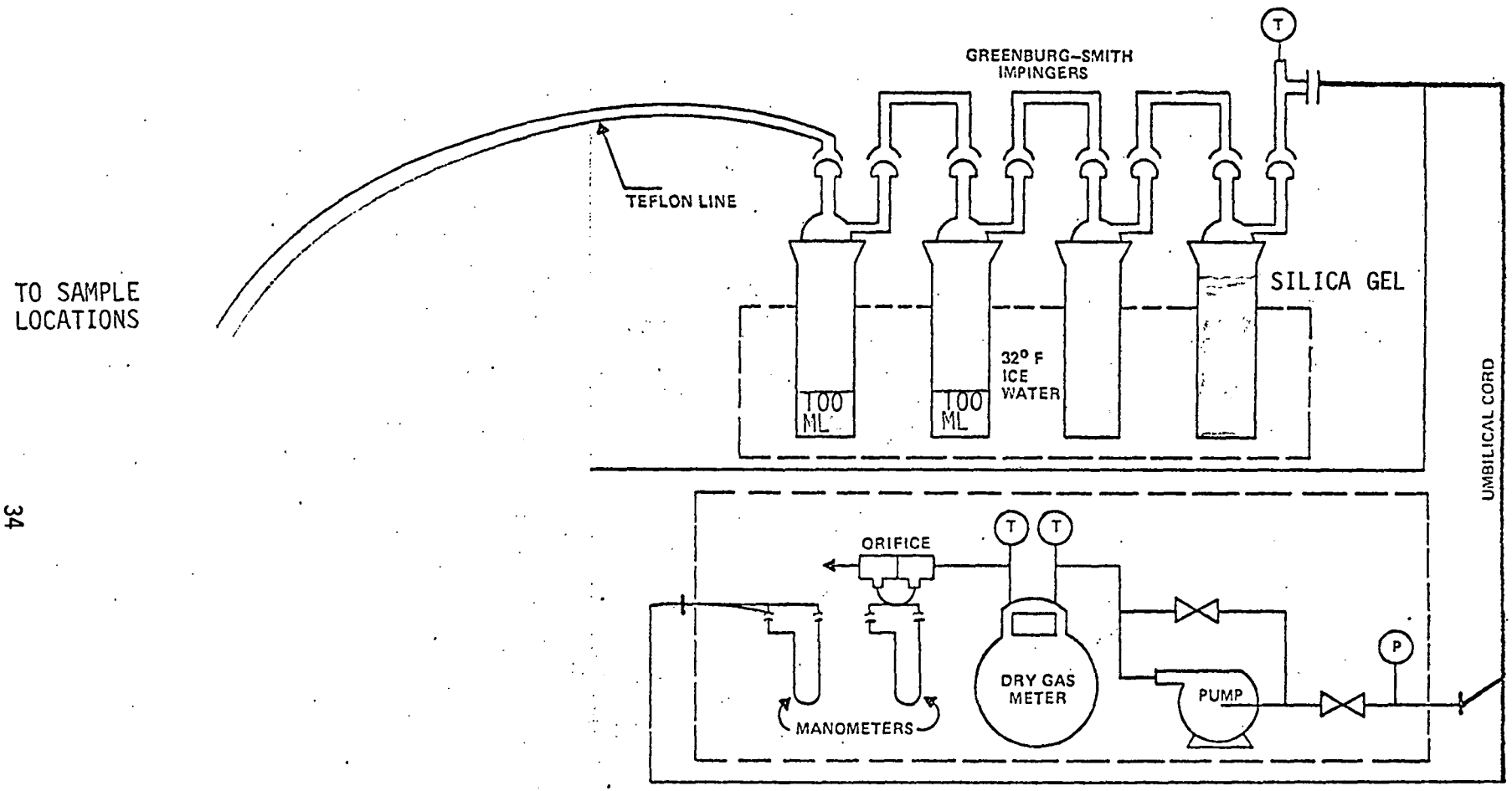

FIGURE 5.2. Moisture train

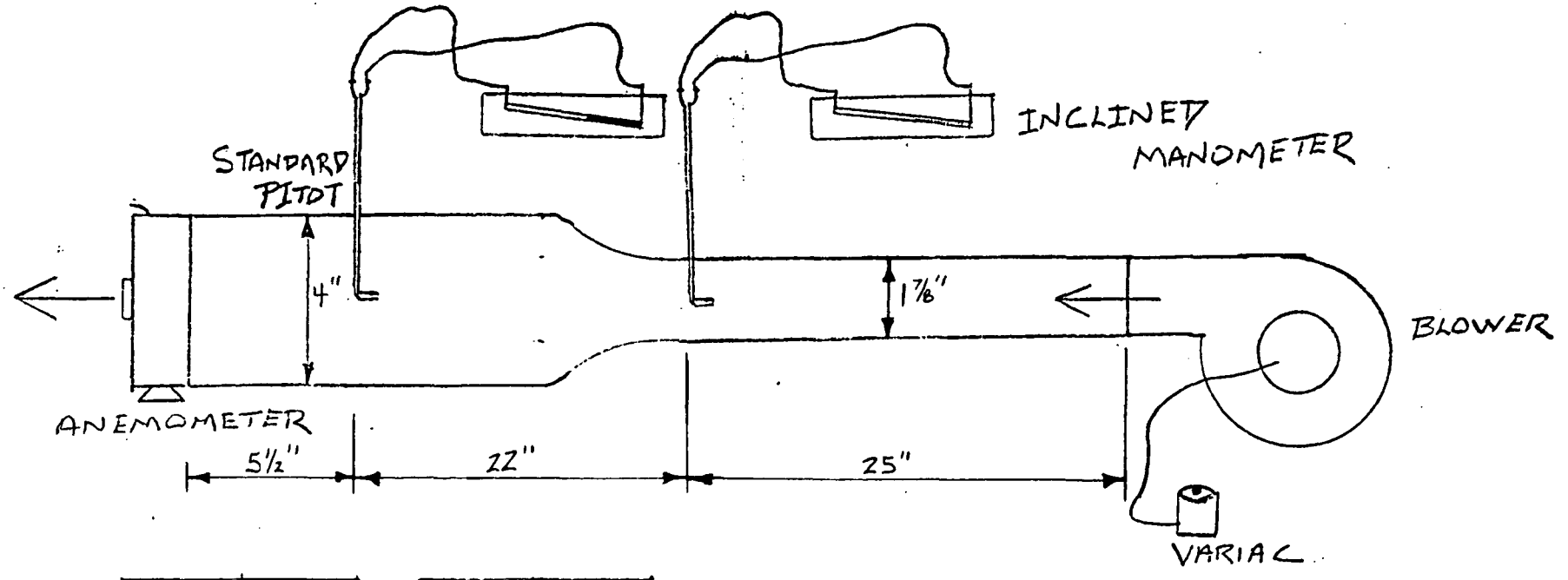

FT/MIN[a]	CORRECTION
100	0
200	+12
300	+6
400	-2
500	-8
600	-14
700	-20
800	-27
900	-34
1000	-40

FT/MIN[a]	CORRECTION
1100	-56
1200	-68
1300	-80
1400	-94
1500	-107
1600	-120
1700	-132
1800	-146
1900	-160
2000	-172

FIGURE 5.3. Anemometer Calibration Apparatus With Correction Results.

[a]Ft/min Adjusted from Standard Pitot Readings.

See Anemometer check with calculations of 1 7/8" Reading and 4" reading to the Anemometer Flows. (Appendix A)