United States
Environmental Protection
Agency

Office of Air Quality
Planning and Standards
Research Triangle Park NC 27711

EMB Report 79-IBR-2
August 1979

Air

EPA

Industrial Boilers

Emission Test Report Rickenbacker Air Force Base Columbus, Ohio

Volume I: Summary of Results

PEDCo ENVIRONMENTAL, INC.
11499 CHESTER ROAD
CINCINNATI, OHIO 45246
(513) 782-4700
TELEX (513) 782-4807

CONTINUOUS SULFUR DIOXIDE MONITORING OF THE INDUSTRIAL BOILER SYSTEM AT RICKENBACKER AIR FORCE BASE, COLUMBUS, OHIO

VOLUME I

by

PEDCo Environmental, Inc.
11499 Chester Road
Cincinnati, Ohio 45246

Contract No. 68-02-2811
Work Assignment No. 12
PN 3333-L

Technical Manager

Winton Kelly
Emission Measurement Branch

U.S. ENVIRONMENTAL PROTECTION AGENCY
EMISSION STANDARDS AND ENGINEERING DIVISION, OAQPS
RESEARCH TRIANGLE PARK, NORTH CAROLINA 27711

September 1980

BRANCH OFFICES

DALLAS, TEXAS
KANSAS CITY, MISSOURI
COLUMBUS, OHIO
DURHAM, NORTH CAROLINA

CHESTER TOWERS

DISCLAIMER

This report has been reviewed by the Emission Measurement Branch Emission Standards and Engineering Division, Office of Air Quality Planning and Standards, U.S. Environmental Protection Agency, and approved for publication. Approval does not signify that the contents necessarily reflect the views and policies of the U.S. Environmental Protection Agency, nor does mention of trade names or commercial products constitute endorsement or recommendation for use.

CONTENTS

	Page
Figures	iv
Tables	v
Acknowledgment	vii
1.0 Introduction	1-1
2.0 Summary of Results	2-1
3.0 Results	3-1
3.1 Performance specification tests	3-1
3.2 Continuous sulfur dioxide data	3-17
3.3 Data capture and loss	3-26
3.4 Quality assurance	3-33
4.0 Process Description	4-1
4.1 Physical plant	4-1
4.2 Background information	4-5
4.3 Process control during test	4-5
5.0 Continuous Emission Monitoring System Description	5-1
5.1 Sampling interface	5-1
5.2 SO_2 monitor	5-6
5.3 O_2 monitor	5-6
5.4 Recorders	5-7
5.5 Calibration system	5-7
6.0 Procedures and Calculations	6-1
6.1 Continuous SO_2 data computations	6-1
6.2 Performance specification testing	6-5
6.3 Determination of factors accounting for data capture and loss periods	6-13
6.4 Quality assurance	6-15
6.5 Determination of CEM output in the field	6-17
Appendix 1-Hour data listings, and data frequency distributions	A-1

FIGURES

Number		Page
4-1	Photographs of Central Heat Plant and FGD System at Rickenbacker Air Force Base	4-4
4-2	R-C/Bahco Scrubbing System Flow Diagram	4-6
5-1	Sampling Locations after Modifications	5-2
5-2	Flow Diagram of Dupont 460 SO_2 Analyzer with Thermox WDG III O_2 Analyzer	5-3
5-3	Wiring Schematic for Blowback Assembly	5-4
5-4	Photographs of Probe Placement after Modification	5-5
6-1	Sample Data Sheet and Equations for the Determination of Calibration Error	6-7
6-2	Sample Data Sheet and Equations for Determination of System Response Time	6-9
6-3	Sample Data Sheet and Equations for Determination of 2-hour Zero and Calibration Drift	6-10
6-4	Sample Data Sheet and Equations for Determination of 24-hour zero and Calibration Drift	6-12
6-5	Sample Data Sheet and Equations for Determination of System Relative Accuracy	6-14

TABLES

Number		Page
3-1	Summary of SO_2 Analyzer Compliance	3-2
3-2	Summary of O_2 Analyzer Compliance	3-3
3-3	Results of SO_2 Tank Analyses	3-5
3-4	Results of O_2 Tank Analyses	3-6
3-5	Calibration Error at Outlet SO_2	3-7
3-6	Calibration Error at Inlet SO_2 Analyzer	3-8
3-7	Calibration Error at O_2 Analyzer	3-9
3-8	Zero and Calibration Drift at SO_2 Analzyer (2-Hour)	3-11
3-9	Zero and Calibration Drift at O_2 Analyzer (2-Hour)	3-12
3-10	Zero and Calibration Drift at SO_2 Analyzer (24-Hour)	3-13
3-11	Zero and Calibration Drift at O_2 Analyzer (24-Hour)	3-14
3-12	Test Results for Low-Rangle (Outlet) SO_2 Monitor Response Time	3-15
3-13	Test Results for O_2 Monitor Response Time	3-16
3-14	Relative Accuracy of Outlet SO_2 Analyzer	3-18
3-15	Relative Accuracy of Inlet SO_2 Analyzer	3-19
3-16	Relative Accuracy of Outlet O_2 Analyzer	3-20
3-17	Relative Accuracy of Inlet O_2 Analyzer	3-21

TABLES (continued)

		Page
3-18	Summary of Results Using 1-Hour and 24-Hour Averages, January 1 to March 7, 1979	3-23
3-19	Summary of Results Using 1-Hour and 24-Hour Averages, March 8 to April 3, 1979	3-24
3-20	Daily Data Capture and Loss	3-27
3-21	Summary of Process and CEM Operations During Test	3-31
3-22	Maintenance Record of Monitor Components	3-32
3-23	Relative Accuracy of Inlet SO_2 Analyzer	3-34
3-24	Relative Accuracy of Outlet SO_2 Analyzer	3-35
3-25	Relative Accuracy of O_2 Analyzer	3-36
3-26	Inlet Moisture Tests Using Reference Method 4	3-38
3-27	Outlet Moisture Tests Using Reference Method 4	3-38
4-1	Process Information for Rickenbacker Air Force Base	4-2

ACKNOWLEDGMENT

This report was prepared for the Emission Measurement Branch, Emission Standards and Engineering Division, Office of Air Quality Planning and Standards, U.S. Environmental Protection Agency. Mr. Winton Kelly was the Technical Manager. PEDCo Environmental, Inc., appreciates the direction and review of procedures and data that he provided.

Mr. William G. DeWees serves as PEDCo's Project Director and Mr. Anthony S. Wisbith as Project Manager. Mr. Thomas J. Wey supervised field operations and data analysis and was the principal author of the report. Mr. Stephen J. Howie and Mr. Mike Eckstein provided technical support and analysis.

SECTION 1

INTRODUCTION

PEDCo has been contracted by the U.S. Environmental Protection Agency to collect continuous sulfur dioxide (SO_2) emission and removal efficiency data from the flue gas desulfurization (FGD) system serving the central heat plant's industrial boiler system at Rickenbacker Air Force Base (RAFB), near Columbus, Ohio.

Because the continuous emission monitoring system (CEM) used gas monitors to collect the data, performance specification (P/S) tests were conducted at the beginning of data collection to ensure equivalence to manual reference tests. Additional reference testing was performed throughout the test period to provide quality assurance.

Records of boiler, FGD system, and CEM performance were kept to account for data loss and excursions from normal operations, and to provide information regarding operating parameters for correlation with data.

Volume I of this report presents the results of all tests performed and provides background information concerning the process, equipment, and procedures relevant to the tests. Volume II provides detailed listings, instrument calibration logs, field test data, and process logs relevant to the results presented in Volume I.

SECTION 2

SUMMARY OF RESULTS

Continuous SO_2 data were collected from January 22, 1979 to April 4, 1979, with intermittent data losses caused by CEM and process downtime. Data were obtained for 18 or more hours per day on 42 days and showed an average inlet emission rate of 6.7 lb $SO_2/10^6$ Btu (daily standard deviation of 10.3 percent), an average outlet emission rate of 2.2 lb $SO_2/10^6$ Btu (standard deviation of 28.8 percent) and an average SO_2 removal efficiency of 65.8 percent (standard deviation of 17.5 percent).

The FGD system operated normally 91.4 percent of the time during the test period (1604.5 hours of normal operation during 1755.25 total hours from 0600, January 22, to 0914, April 4). The CEM operability was 77.1 percent (1238.75 hours of complete data capture during the 1604.5 hours available). Because of numerous combined boiler/FGD outages and CEM failures exceeding 6 h per 24 h operating day, 32 days of potential data (18 or more hours of normal FGD operation) were excluded from final averages.

Initial P/S tests demonstrated that the CEM complied with U.S. Environmental Protection Agency (EPA) standards of performance* except for the O_2 monitor inlet and outlet test of system

---

* Performance Specifications 2 and 3, Federal Register, Vol. 44, No. 197, October 10, 1979.

relative accuracy, which yielded results of 1.81 and 1.65 percent, whereas standards place the allowable limit for each at 0.5 percent. Outlet SO_2 monitor relative accuracy yielded 22.0 percent with an allowable limit of 20 percent.

The data collected at Rickenbacker demonstrates that this scrubber is not as efficient as had been previously expected. Pluggage of the FGD system's secondary stage and slurry lines were originally thought to be responsible for the low removal efficiency. Even after the scrubber module was inspected and corrective maintenance was performed, the SO_2 removal efficiency remained unchanged. Throughout the remaining portion of the testing program operational controls of the FGD system were under constant adjustment. Among these were weir heights and slurry feed rates. All attempts to improve the removal efficiency throughout this period proved unsuccessful.

SECTION 3

RESULTS

3.1 PERFORMANCE SPECIFICATION TESTS

Complete P/S tests were performed at the beginning of the test period to ensure equivalence of CEM data to data from manual reference method tests. Tables 3-1 and 3-2 summarize results of the initial P/S tests.

3.1.1 P/S Test Results

Sampling Locations--

Both inlet and outlet CEM and manual reference method sampling points were chosen to be representative of the process streams tested and achieve equivalence between manual method and CEM samples. This was achieved in all cases by choosing sampling points centrally located in the ducts at the furthest accessible points downstream from possible process interferences. Inlet and outlet manual method samples were drawn from points adjacent in the stacks (Figure 5-1).

Conditioning Period--

The period starting 0000, January 15, 1979, and ending 2400, January 21, 1979, was the conditioning period for the CEM. During this period the CEM was operated in the same manner as it

TABLE 3-1. SUMMARY OF SO_2 ANALYZER COMPLIANCE

	Inlet	Outlet	Specification	Table reference
Accuracy	10.1	22.3[a]	≤20%	6-14, 6-15
Calibration error: high	2.4%	1.2%	≤ 5%	6-7, 6-8
Calibration error: midpoint	1.07%	1.8%	≤ 5%	6-7, 6-8
Zero drift (2)	0.22%	0.22%	≤ 2%	6-12
Zero drift (24)	0%	0%	≤ 2%	6-10
Calibration drift (2)	2.23%	2.23%	≤ 2%	6-12
Calibration drift (24)		0.31	≤ 2.5%	6-10
Response time A	16.7 s	41.3 s	≤ 10 min	6-5
Operational test period	OK	OK	≥ 168 h	

[a] See Table 3-14, footnote d, Deletion of Last Data Point.

TABLE 3-2. SUMMARY OF O_2 ANALYZER COMPLIANCE

	Inlet	Outlet	Specification	Table reference
Accuracy	1.81%	1.65%	$\leq$ 0.5%	6-16, 6-17
Calibration error: high	0.34%	0.34%	$\leq$ 5%	6-9
Calibration error: midpoint	0.23%	0.23%	$\leq$ 5%	6-9
Zero drift (2)	0.01	0.01	$\leq$ 0.4%	6-13
Zero drift (24)	0.0%	0.0%	$\leq$ 0.5%	6-11
Calibration drift (2)	0.05	0.05	$\leq$ 0.4%	6-13
Calibration drift (24)	0.05%	0.05%	$\leq$ 0.5%	6-11
Response time A		73 s	$\leq$ 10 min	6-6
Operational test period	OK	OK	168 h	

was during the following test period, with no maintenance, repairs, replacements, or adjustments other than specified as routine and required by operation and maintenance manuals or the manufacturers' representatives.

Operational Test Period--

The CEM was operated from the end of the conditioning period, 0000, January 22, 1979, through April 4, 1979, with no maintenance, repairs, replacement, or adjustements not clearly routine or required as specified by the manufacturers. During this period all test data for initial and quality assurance tests and all CEM emissions data were collected.

Calibration Gas Certification--

The SO_2 and O_2 calibration gases were certified by PEDCo using EPA Method 6 and 3. Results of the analyses are summarized in Tables 3-3 and 3-4.

Calibration Error--

Calibration error tests were performed January 29. The SO_2 monitor met the error limitation of less than 5 percent on both operating ranges, and the O_2 monitor met the same limitation on its single range. Tables 3-5 and 3-6 present the test results for the low- and high-range (outlet and inlet) SO_2 monitor calibration error; the test results for O_2 monitor calibration error are presented in Table 3-7.

TABLE 3-3. RESULTS OF SO_2 TANK ANALYSES
(ppm SO_2)[2]

Reference Method 6 analysis	Vendor analysis
SO_2 inlet midrange gas	
No. 1 2089	
No. 2 2260	
No. 3 2438	
Average 2260	2500
SO_2 outlet midrange gas	
EPA Audit Gas 226	226
SO_2 inlet span gas	
No. 1 4007	
No. 2 4070	
No. 3 4013	
Average 4030	4500
SO_2 outlet span gas	
No. 1 431	
No. 2 423	
No. 3 437	
Average 430	500

TABLE 3-4. RESULTS OF O_2 TANK ANALYSES
(percentage of O_2)

Reference Method 3 analysis		Vendor analysis
O_2 tank A		
No. 1	2.0	
No. 2	2.0	
No. 3	2.0	
Average	2.0	2.0
O_2 tank B		
No. 1	16.8	
No. 2	16.8	
No. 3	16.8	
Average	16.8	17.0
O_2 tank C		
No. 1	12.0	
No. 2	12.0	
No. 3	12.0	
Average	12.0	12.0

TABLE 3-5. CALIBRATION ERROR AT OUTLET SO_2[a]
(ppm of SO_2)

Run	Concentration	Reading	Difference
1	0	0	0
2	226	205	21
3	430	420	10
4	226	215	11
5	0	0	0
6	430	420	10
7	226	217.5	8.5
8	0	0	0
9	430	420	10
10	226	219.5	6.5
11	0	0	0
12	226	217.5	8.5
13	430	427.5	2.5
14	0	0	0
15	430	422.5	7.5

		Mid	High
Mean difference	=	11.1 ppm	8 ppm
CI_{95}	=	7.15 ppm	4.05 ppm
Calibration error	=	1.8%	1.2%

[a] Calibration gas concentration: mid = 226 ppm, high = 430 ppm.

TABLE 3-6. CALIBRATION ERROR AT INLET SO_2 ANALYZER[a]
(ppm of SO_2)

Run	Concentration	Reading	Difference
1	2260	2260	0
2	4030	4050	-20
3	0	0	0
4	4030	4075	-45
5	2260	2275	-15
6	0	0	0
7	4030	4100	-70
8	2260	2266	-26
9	0	0	0
10	4030	4125	-95
11	0	0	0
12	2260	2300	-40
13	4030	4150	-120
14	0	0	0
15	2260	2315	-55

		Mid	High
Mean difference	=	-27.2 ppm	-70 ppm
CI_{95}	=	26.5 ppm	49.1 ppm
Calibration error	=	1.07%	2.4%

[a] Calibration gas concentration: mid = 2260 ppm, high = 4030 ppm.

TABLE 3-7. CALIBRATION ERROR AT O_2 ANALYZER
(percentage of O_2)

Run	Concentration	Reading	Difference
1	0	0	0
2	12	12	0
3	20.9	20.8	0.1
4	0	0	0
5	20.9	20.8	0.1
6	12	12	0
7	0	0	0
8	20.9	20.8	0.1
9	12	11.7	0.3
10	0	0	0
11	20.9	20.7	0.2
12	12	12	0
13	20.9	20.5	0.4
14	0	0	0
15	12	12	0

		Mid	High
Mean difference	=	0.06%	0.18%
CI_{95}	=	0.17%	0.16%
Calibration error	=	0.23%	0.34%

2-Hour Zero and Calibration Drift--

The 2-hour drift tests of the SO_2 and O_2 monitors were performed January 29 through February 28. The results of the SO_2 monitor drift tests are presented in Table 3-8, showing both within the allowable limit of 2 percent of span for both zero and calibration drift. The O_2 monitor drift test results, presented in Table 3-9, were within the allowable limit of 0.4 percent O_2 for zero and calibration drift.

24-Hour Zero and Calibration Drift--

The 24-hour drift tests were performed from January 30 through February 5. Table 3-10 presents the results of the SO_2 monitor 24-hour tests; the data show compliance with the 2 percent zero and 2.5 percent calibration drift. Table 3-11 presents results of O_2 monitor 24-hour zero and calibration drift tests; the data show compliance with the 0.5 percent limit for O_2 monitor zero and calibration drift.

CEM Response Time--

The instrument and system response times for DuPont 460 and Thermox WDG III gas monitors have been shown by previous testing to be well within the 15 minute specification. Verification of this was obtained by tests performed January 28, showing the average response time in all cases to be less than 1 minute. Table 3-12 presents results of the SO_2 monitor tests. Table 3-13 shows test results of the O_2 monitor.

TABLE 3-8. ZERO AND CALIBRATION DRIFT AT SO_2 ANALYZER (2 HOUR)
(percentage of scale)

Data set		Time		Zero rdg		Zero drift	Span reading		Span drift	Calib. drift
No.	Date	Begin	End	Init. A	Fin. B	C=B-A	Init. D	Fin. E	F=E-D	G=E-C
1	1/29	1015	1215	0.5	0.8	0.3	86.0	84.5	1.5	1.2
2		1215	1415	0.8	0.8	0	84.5	84.9	0.4	0.4
3		1415	1615	0.8	0.8	0	84.9	84.9	0	0
4	1/30	0900	1100	0.5	0.8	0.3	91.5	87.5	-4.0	-4.8
5		1100	1400	0.8	0	-0.8	87.5	87.0	-0.5	-1.3
6		1400	1600	0	0	0	87.0	86.5	-0.5	-0.5
7		1600	1800	0	0	0	86.5	87.0	0.5	0.5
8	1/31	0900	1115	0	0.3	0.3	88.5	85	-3.5	-3.8
9		1115	1315	0.3	0.3	0	85.0	84.5	-0.5	-0.5
10		1315	1515	0.3	0.1	-0.2	84.5	84.2	-0.3	-0.3
11	2/1	0945	1145	0.2	0.3	0.1	86.0	82.5	-3.5	-3.6
12		1145	1345	0.2	0	-0.2	82.5	81.0	-1.5	-1.7
13	2/3	1500	1700	0.3	0	-0.3	88.5	85.0	-3.5	-3.8
14	2/4	1335	1535	0.2	0.3	0.1	86.5	86.5	0	0.1
15		1535	1750	0.3	0.3	0	86.5	86.7	0.2	0.2
Arithmetic mean (Eq. 6-1)				-0.07						-1.17
CI_{95} (Eq. 6-2)				0.15						1.06
			Zero drift	0.22%					Calibration drift	2.23%

TABLE 3-9. ZERO AND CALIBRATION DRIFT AT O_2 ANALYZER (2 HOUR)
(percentage of scale)

Data set		Time		Zero rdg		Zero drift	Span reading		Span drift	Calib. drift
No.	Date	Begin	End	Init. A	Fin. B	C=B-A	Init. D	Fin. E	F=E-D	G=E-C
1	2/22	1040	1240	0	0	0	83.6	83.6	0	0
2		1240	1440	0	0	0	83.6	83.8	0.2	0.2
3		1440	1640	0	0	0	83.8	83.8	0	0
4	2/23	0900	1100	0	0	0	83.6	83.7	0.1	0.1
5	2/25	1200	1400	0	0	0	83.5	83.5	0	0
6		1400	1600	0	0	0	83.5	83.6	0.1	0.1
7	2/26	0915	1115	0	0	0	83.6	83.5	-0.1	-0.1
8		1115	1315	0	0	0	83.5	83.6	0.1	0.1
9		1315	1515	0	0	0	83.6	84.0	0.4	0.4
10		1515	1715	0	0	0	84.0	83.8	-0.2	-0.2
11	2/27	0945	1145	0	0	0	83.6	83.0	-0.6	-0.6
12		1145	1345	0	0	0	83.0	83.6	0.6	0.6
13		1345	1545	0	0.2	0.2	83.6	83.8	0.2	0
14		1545	1745	0.2	0	-0.2	83.8	83.6	-0.2	-0.4
15	2/28	0850	1050	0	0	0	84.0	83.6	0.4	0.4

Arithmetic mean (Eq. 6-1)	0.00		0.04
CI_{95} (Eq. 6-2)	0.04%		0.17%
Zero drift	0.01% O_2	Calibration drift	0.05% O_2

TABLE 3-10. ZERO AND CALIBRATION DRIFT AT SO_2 ANALYZER (24-HOUR)

No.	Reading scale		Recorder reading, % scale		Drift, ppm		
	Date	Time	Zero	Span	Zero	Span	Calibration
1	1/30/79	0930	0	86.0			
2	1/31/79	0950	0	88.0	0	-2.0	-2.0
3	2/1/79	0930	0.2	87.0	0.2	1.0	-2.0
4	2/2/79	0925	0.5	83.5	-0.3	3.5	3.0
5	2/3/79	0940	0.3	82.5	.2	1.0	1.0
6	2/4/79	0930	0	84.5	0	-2.0	-2.0
7	2/5/79	0935	0	87.0	0	-2.5	-2.5

7-day zero drift
Mean = 0.17 ppm
CI_{95} = 1.67%
24-hr drift = 0%

7-day calibration drift
Mean = -0.83 ppm
CI_{95} = -0.49%
24-hr drift = 0.31%

TABLE 3-11. ZERO AND CALIBRATION DRIFT AT O_2 ANALYZER (24-HOUR)
(percentage of oxygen)

No.	Reading		Recorder reading, % scale		Drift, % scale		
	Date	Time	Zero	Span	Zero	Span	Calibration
1	2/22/79	1125	0	83.6			
2	2/25/79	1130	0	83.6	0	0	0
3	2/26/79	1125	0	83.6	0	0	0
4	2/27/79	1125	0	83.6	0	0	0
5	2/28/79	1130	0	83.6	0	0	0
6	3/1/79	1125	0	83.5	0	0.1	0.1
7	3/2/79	1125	0	83.6	0	-0.1	-0.1

9-day zero drift
Mean = 0.0
CI_{95} = 0.0
24-hr drift = 0.0

9-day calibration drift
Mean = 0.0
CI_{95} = 0.05%
24-hr drift = 0.05%

TABLE 3-12. TEST RESULTS FOR LOW-RANGE (OUTLET) SO_2 MONITOR RESPONSE TIME[a] (seconds)

Test No.	Upscale	Downscale
1	39	41
2	42	43
3	46	40
Average	A = 42.3	B = 41.3

System response time (slower of A and B) = 41.3

C = (A - B) = 1.0 (must be less than 15% of average or 5 seconds, whichever is less)

[a] Tests run on January 28, with span gas concentration of 430 ppm SO_2.

TEST RESULTS FOR HIGH-RANGE (INLET) SO_2 MONITOR RESPONSE TIME[a] (seconds)

Test No.	Upscale	Downscale
1	18	20
2	17	19
3	15	18
Average	A = 16.7	B = 19

System response time (slower of A and B) = 16.7

C = (A - B) = 2.3 (must be less than 15% of average or 5 seconds, whichever is less)

[a] Tests run on January 28, with span gas concentration of 4030 ppm SO_2.

TABLE 3-13. TEST RESULTS FOR O_2 MONITOR RESPONSE TIME[a] (seconds)

Test No.	Upscale	Downscale
1	75	73
2	71	70
3	79	76
Average	A = 75	B = 73

System response time (slower of A and B) = 73

C = (A - B) = 2.0 (must be less than 15% of average or 5 seconds, whichever is less)

[a] Tests run on January 28, with span gas concentration of 20.95% O_2.

System Relative Accuracy--

Nine outlet SO_2 relative accuracy tests were performed on January 31 and February 1. Results showed relative accuracy of 22.3 percent, failing to meet the specified limit of 20 percent. By dropping the results of test no. 9 from calculations because of faulty manual method test probe, 11.3 percent was achieved.

Nine inlet SO_2 relative accuracy tests were performed on February 2 through February 4. Results showed relative accuracy of 10.0 percent, complying with the specified limit of 20 percent.

Both inlet and outlet O_2 relative accuracy test results failed to meet the specified limit of 0.5 percent yielding results of 1.81 and 1.65 percent.

Tables 3-14 through 3-17 present results of the CEM relative accuracy tests.

3.2 CONTINUOUS SULFUR DIOXIDE DATA

3.2.1 Data Listings

15-Minute Readings--

Computer printouts list complete 15-minute readings showing the wet basis FGD inlet and outlet SO_2 and O_2 concentrations, the moisture content of each gas stream tested, and the corrected (dry basis) inlet and outlet SO_2 and O_2 values. Inlet and outlet emission rates (lb $SO_2/10^6$ Btu) and FGD system efficiencies are calculated and listed on an hourly basis. These listings are presented in Appendix A.

TABLE 3-14. RELATIVE ACCURACY OF OUTLET SO_2 ANALYZER
(ppm of SO_2)

Run	Date	Reference method, ppm dry	Analyzer ppm wet[a,b]	Analyzer ppm dry[c]	Difference
1	1/31/79	618	577	635	17
1	1/31/79	814	618	680	-134
3	1/31/79	468	540	595	127
4	1/31/79	437	512	564	127
5	1/31/79	617	577	635	18
6	1/31/79	662	613	675	13
7	1/31/79	612	512	564	-48
8	2/1/79	725	614	675	-50
9	2/1/79	383	600	659	276[d]

Mean reference method = 593 ppm
Mean difference = 38.4 ppm
CI_{95} = 93.6 ppm
Accuracy = 22.3%

[a] Mean moisture = 9.05.

[b] Analyzer reading = 15 minute averages.

[c] Analyzer, dry = (analyzer wet) x $\frac{100}{100 - (\text{mean moisture})}$

[d] Deletion of last data point yields:

Mean reference method = 619 ppm
Mean difference = 8.8 ppm
CI_{95} = 61.1 ppm
Accuracy = 11.3%

TABLE 3-15. RELATIVE ACCURACY OF INLET SO_2 ANALYZER
(ppm of SO_2)

Run	Date	Reference method, ppm dry	Analyzer ppm wet[a,b]	Analyzer ppm dry[c]	Difference
1	2/2/79	1430	1459	1508	78
2	2/2/79	1145	1279	1322	177
3	2/2/79	1142	1355	1400	258
4	2/3/79	1338	1226	1267	-71
5	2/3/79	1267	1276	1319	52
6	2/4/79	1294	1263	1306	12
7	2/4/79	1459	1314	1358	-101
8	2/4/79	1583	1574	1626	43
9	2/4/79	1608	1574	1626	18

Mean reference method = 1363 ppm
Mean difference = $S(\bar{x})$ = 37.3
CI_{95} = 86.0
Accuracy = 10.1

[a] Mean moisture = 3.23%.

[b] Analyzer readings are 15-minute averages.

[c] Analyzer, dry = (analyzer wet) x $\frac{100}{100 - (\text{mean moisture})}$

TABLE 3-16. RELATIVE ACCURACY OF OUTLET O_2 ANALYZER
(percentge of O_2)

Test	Date	Method 3 % dry	Analyzer ppm wet[a,b]	Analyzer ppm dry[c]	Difference
1	2/19/79	17.0	16.4	18.1	1.1
2	2/19/79	17.6	16.5	18.2	0.6
3	2/19/79	16.8	16.4	18.1	1.3
4	2/19/79	15.9	16.1	17.8	1.9
5	2/19/79	16.0	16.2	17.9	1.9
6	2/19/79	16.9	16.4	18.1	1.2
7	2/19/79	16.7	16.4	18.1	1.4
8	2/19/79	17.0	16.8	18.6	1.6
9	2/19/79	17.3	16.3	18.0	0.7

Mean difference = 1.3%
CI_{95} = .35%
Accuracy = 1.65%

[a] Mean moisture = 9.5%.

[b] Analyzer reading = 15 minute average.

[c] Analyzer, dry = (analyzer, wet) x $\frac{100}{100 - (\text{mean moisture})}$

TABLE 3-17. RELATIVE ACCURACY OF INLET O_2 ANALYZER
(percentge of O_2)

Test	Date	Method 3 % dry	Analyzer ppm wet[a,b]	Analyzer ppm dry[c]	Difference
1	2/11/79	12.0	13.1	13.5	1.5
2	2/11/79	11.6	12.7	13.2	1.6
3	2/13/79	10.0	12.2	12.6	2.6
4	2/13/79	11.5	11.5	11.9	0.4
5	2/13/79	11.2	12.3	12.7	1.5
6	2/13/79	11.2	12.2	12.6	1.4
7	2/13/79	11.7	12.4	12.8	1.1
8	2/13/79	12.1	12.6	13.1	1.0
9	2/13/79	12.4	11.7	12.1	-0.3

Mean difference = 1.20 %
CI_{95} = .61%
Accuracy = 1.81%

[a] Mean moisture = 3.5%.

[b] Analyzer reading = 15 minute averages.

[c] Analyzer, dry = (analyzer wet) x $\frac{100}{100 - (\text{mean moisture})}$

1-Hour Averages--

The 1-hour averages of inlet and outlet emission rates and FGD efficiency were averaged for two periods: January 24 to March 7 and March 8 to April 3. The total averages for the two periods were calculated from available hourly values for days when data were collected for 18 or more hours and are presented in Tables 3-18 and 3-19. Daily hourly listings are presented with the appendix included in this volume.

24 Hour Averages--

The 24-hour (daily) averages of inlet and outlet emission rates and FGD system efficiency were also calculated for the two periods and are presented in Tables 3-18 and 3-19. As with the 1-hour averages, data were included only for days that met the minimum data capture requirement of 18 hours.

Frequency Distributions--

Histograms were plotted and demonstrate the variability of 1-hour and 24-hour data. These are presented in the appendix included in this volume.

3.2.2 Omitted Data

There were three basic reasons that data periods did not appear in the above listings or calculations.

Absence of Data Caused by Process Shutdown or CEM Failure--

During these occurrences no data were available for listing. During occurrences where only one parameter (inlet or outlet readings) was omitted, the other, if available, was listed.

TABLE 3-18. SUMMARY OF RESULTS USING 1-HOUR AND 24-HOUR AVERAGES, JANUARY 1 TO MARCH 7, 1979

30 OPERATING DAYS
SUMMARY OF RESULTS
USING 1-HOUR AVERAGES

LOCATION: RICKENBACKER AFB 1979
DATE: 1-22-79

	LOAD	E_{IN}	E_{OUT}	EFF
# AVERAGES	720.	691.	599.	592.
% OF DATA	100.	96.	83.	82.
MINIMUM	0.	4.445	1.145	26.270
MAXIMUM	0.	8.642	5.014	83.661
MEAN	0.	6.240	2.571	58.783
STD.DEV.	0.	.595	.665	9.979
% STD.DEV.	0.	9.529	25.862	16.975

30-DAY REMOVAL EFICIENCY USING

$(MEAN)_{30}^{1}$ E_{IN}, E_{OUT} : 58.801%

NOTE: $(MEAN)_{X}^{Y}$ IS DEFINED AS:

THE MEAN FOR X DAYS USING Y-HOUR AVERAGES

30 OPERATING DAYS
SUMMARY OF RESULTS
USING 24-HOUR AVERAGES

LOCATION: RICKENBACKER AFB 1979
DATE: 1-22-79

DATE	LOAD	E_{IN}	E_{OUT}	EFF
1-24-79	0.	6.281	######	#####
1-25-79	0.	5.467	2.881	48.1
1-26-79	0.	6.273	2.698	56.6
1-27-79	0.	6.485	1.877	70.6
1-28-79	0.	6.016	1.958	67.6
1-29-79	0.	6.201	2.463	60.2
1-30-79	0.	6.158	2.642	57.0
1-31-79	0.	6.228	2.686	56.9
2- 1-79	0.	6.298	3.213	49.0
2- 2-79	0.	6.253	3.377	46.1
2- 3-79	0.	6.278	2.931	52.5
2- 4-79	0.	6.399	3.344	47.5
2- 5-79	0.	6.931	3.560	48.8
2- 6-79	0.	6.790	3.121	54.0
2- 7-79	0.	6.372	2.719	57.2
2- 8-79	0.	5.916	2.740	53.6
2- 9-79	0.	6.419	2.711	57.8
2-10-79	0.	6.342	3.095	51.4
2-11-79	0.	5.781	######	#####
2-12-79	0.	5.822	######	#####
2-16-79	0.	6.911	2.459	64.4
2-17-79	0.	6.873	######	#####
2-18-79	0.	6.665	2.081	68.5
2-19-79	0.	6.938	2.279	66.8
2-25-79	0.	5.625	2.543	54.7
3- 1-79	0.	5.379	2.016	62.4
3- 2-79	0.	5.712	1.768	68.9
3- 3-79	0.	6.172	1.717	72.2
3- 4-79	0.	6.138	1.873	69.5
3- 7-79	0.	6.112	1.936	68.3
# AVERAGES	30.	30.	26.	26.
% OF DATA	97.	97.	84.	84.
MINIMUM	0.	5.379	1.717	46.117
MAXIMUM	0.	6.938	3.560	72.191
MEAN	0.	6.241	2.563	58.864
STD.DEV.	0.	.416	.540	8.200
% STD.DEV.	#####	6.673	21.083	13.930

30-DAY REMOVAL EFICIENCY USING

$(MEAN)_{30}^{24}$ E_{IN}, E_{OUT} : 58.927%

NOTE: $(MEAN)_{X}^{Y}$ IS DEFINED AS:

THE MEAN FOR X DAYS USING Y-HOUR AVERAGES

TABLE 3-19. SUMMARY OF RESULTS USING 1-HOUR AND 24-HOUR AVERAGES, MARCH 8 TO APRIL 3, 1979

25 OPERATING DAYS
SUMMARY OF RESULTS
USING 1-HOUR AVERAGES

LOCATION: RICKENBACKER AFB 1979
DATE: 3- 8-79

	LOAD	E IN	E OUT	EFF
# AVERAGES	601.	549.	415.	369.
% OF DATA	100.	92.	69.	62.
MINIMUM	0.	5.714	.413	57.530
MAXIMUM	0.	11.287	3.012	96.140
MEAN	0.	7.249	1.680	77.032
STD.DEV.	0.	.747	.454	7.585
% STD.DEV.	0.	10.301	27.050	9.847

30-DAY REMOVAL EFICIENCY USING

$(MEAN)_{30}^{1}$ E IN , E OUT : 76.8241

NOTE: $(MEAN)_{X}^{Y}$ IS DEFINED AS:

THE MEAN FOR X DAYS USING Y-HOUR AVERAGES

25 OPERATING DAYS
SUMMARY OF RESULTS
USING 24-HOUR AVERAGES

LOCATION: RICKENBACKER AFB 1979
DATE: 3- 8-79

DATE	LOAD	E IN	E OUT	EFF
3- 8-79	0.	6.626	######	#####
3- 9-79	0.	6.816	######	#####
3-10-79	0.	6.717	######	#####
3-11-79	0.	6.685	2.176	67.1
3-12-79	0.	6.876	######	#####
3-13-79	0.	######	1.633	#####
3-14-79	0.	######	2.035	#####
3-15-79	0.	7.304	1.534	77.7
3-16-79	0.	8.213	1.286	82.9
3-17-79	0.	7.665	1.561	79.6
3-18-79	0.	7.736	1.793	76.8
3-19-79	0.	7.524	1.548	79.4
3-20-79	0.	7.926	1.651	79.1
3-21-79	0.	7.858	1.493	81.0
3-22-79	0.	7.628	1.420	81.4
3-23-79	0.	7.680	1.908	74.7
3-24-79	0.	7.004	2.349	66.6
3-25-79	0.	6.974	######	#####
3-26-79	0.	6.330	######	#####
3-27-79	0.	6.152	2.159	64.9
3-30-79	0.	7.615	######	#####
3-31-79	0.	7.439	1.155	84.2
4- 1-79	0.	7.011	1.591	77.3
4- 2-79	0.	7.236	1.447	80.0
4- 3-79	0.	7.666	1.561	79.3
# AVERAGES	25.	23.	18.	16.
% OF DATA	81.	74.	58.	52.
MINIMUM	0.	6.152	1.155	64.895
MAXIMUM	0.	8.213	2.349	84.243
MEAN	0.	7.247	1.683	77.001
STD.DEV.	0.	.543	.323	5.845
% STD.DEV.	#####	7.487	19.216	7.591

30-DAY REMOVAL EFICIENCY USING

$(MEAN)_{30}^{24}$ E IN , E OUT : 76.7731

NOTE: $(MEAN)_{X}^{Y}$ IS DEFINED AS:

THE MEAN FOR X DAYS USING Y-HOUR AVERAGES

These instances were caused by periods of CEM sampling interface failing in the case of the affected parameter, but continuing to operate in the case of the unaffected parameter. FGD efficiency data could not be calculated in such cases.

Unrepresentative Process Operation--

During periods when the FGD system was being operated in a manner that did not reflect normal operational process control, data were not included in the data listings. Where available, they are listed in Appendix A, but were not used in calculations concerning 1-hour and 24-hour averages of FGD performance.

Failure to Obtain a Sufficient Data Base for Computation--

At least two 15-minute readings per hour were necessary for an hourly reading to be computed in the initial data listing, and at least eighteen 1-hour averages of a parameter were needed for data to be included into the summaries of 1-hour and 24-hour results.

3.2.3 Process Operations Affecting SO_2 Emission Rates

Inlet Emission Rates--

Inlet SO_2 emission rates were affected primarily by the sulfur content of the coal burned. Peabody Coal Company and Yancy Minerals supplied the coal through the end of the test. The data collected can be viewed as representative of a mixture of coals from both vendors.

Outlet Emission Rates--

Outlet SO_2 rates reflect FGD system efficiency, which varied according to the limestone feed rate. Section 4 describes the FGD process and control practices.

3.3 DATA CAPTURE AND LOSS

Table 3-20 lists the daily hours of data capture and loss from January 22 to April 4, 1979, and Table 3-21 summarizes process and CEM operations. The performance of the FGD system and CEM affected data capture and are described below.

3.3.1 FGD System Performance

Total operating data showed that FGD system availability, reliability, utilization, and operability were all 92.8 percent; however, 140.5 hours (8.0 percent of the total FGD system operating time) was not regarded as representative of normal process control and was excluded from the data base.

3.3.2 CEM Performance

CEM Operability--

Total data from January 22 to April 4, 1979 show that CEM inlet operability was 94.3 percent, outlet operability was 79.7 percent and total system operability (concurrent operation of inlet and outlet monitors) was 76.0 percent.

CEM Downtime--

A breakdown of the causes for inlet and outlet data losses due to CEM failures is shown in Table 3-22.

TABLE 3-20. DAILY DATA CAPTURE AND LOSS
(hours except as indicated)

Data day No.	Date in 1980	Normal process operation	Process downtime (abnormal operation)	Inlet data capture	Outlet data capture	Efficiency data capture	O_2 monitor downtime	SO_2 monitor downtime	Sampling interface downtime
	1-22	4	14	4	4	4	0	0	0
	1-23	8.5	15.5	24	0	0	0	0	24
	1-24	24	0	24	8.25	8.25	0	3.75	15.75
1	1-25	24	0	24	24	24	0	0	0
2	1-26	24	0	22	22	22	2	2	0
3	1-27	24	0	21	21	21	0	3	0
4	1-28	24	0	24	24	24	0	0	0
5	1-29	24	0	23	23	23	1	1	0
6	1-30	24	0	24	24	24	0	0	0
7	1-31	24	0	24	24	24	0	0	0
8	2-1	24	0	20	20	20	4	0	0
9	2-2	24	0	24	24	24	0	0	0
10	2-3	24	0	18	23	18	1	6	0
11	2-4	24	0	23	24	23	0	1	0
12	2-5	24	0	24	24	24	0	0	0
13	2-6	24	0	24	24	24	0	0	0
14	2-7	23	1	23	23	23	0	0	0
15	2-8	24	0	24	24	24	0	0	0
16	2-9	24	0	24	24	24	0	0	0
17	2-10	24	0	24	24	24	0	0	0

(continued)

TABLE 3-20 (continued)

Data day No.	Date in 1980	Normal process operation	Process downtime (abnormal operation)	Inlet data capture	Outlet data capture	Efficiency data capture	O_2 monitor downtime	SO_2 monitor downtime	Sampling interface downtime
	2-11	24	0	24	15.5	15.5	0	0	0
	2-12	24	0	24	13	13	0	0	10
	2-13	24	0	24	9	9	0	0	15
	2-14	24	0	24	14	14	0	0	10
	2-15	12	12	12	12	12	0	0	0
18	2-16	24	0	23	23	23	0	1	0
	2-17	24	0	10	10	10	0	0	14
19	2-18	24	0	24	20	20	0	0	4
20	2-19	24	0	24	21	21	0	3	0
	2-20	14	10	12	9	9	0	3	0
	2-21	0	24	0	0	0	0	0	0
	2-22	6	18	6	6	6	0	0	0
	2-23	24	0	12.5	12.5	12.5	11.5	0	0
	2-24	24	0	5	5	5	19	0	0
21	2-25	24	0	24	24	24	0	0	0
	2-26	24	0	17	17	17	7	0	0
	2-27	8	16	8	8	8	0	0	0
	2-28	8	16	8	8	8	0	0	0
	2-29	0	24	0	0	0	0	0	0
22	3-1	24	0	21	21	21	2	3	0
23	3-2	24	0	24	24	24	0	0	0

(continued)

TABLE 3-20 (continued)

Data day No.	Date in 1980	Normal process operation	Process downtime (abnormal operation)	Inlet data capture	Outlet data capture	Efficiency data capture	O_2 monitor downtime	SO_2 monitor downtime	Sampling interface downtime
24	3-3	24	0	24	24	24	0	0	0
25	3-4	24	0	24	24	24	0	0	0
	3-5	24	0	24	13	13	0	0	11
	3-6	24	0	24	10	10	0	0	14
26	3-7	24	0	24	24	24	0	0	0
	3-8	24	0	24	4	4	0	0	20
	3-9	24	0	24	0	0	0	0	24
	3-10	24	0	24	24	24	0	0	0
27	3-11	24	0	24	24	24	0	0	0
	3-12	14	0	24	10	10	0	0	14
	3-13	24	0	16	24	16	0	0	0
	3-14	24	0	14	24	14	0	0	0
28	3-15	24	0	24	24	24	0	0	0
29	3-16	24	0	24	24	24	0	0	0
30	3-17	24	0	24	24	24	0	0	0
31	3-18	24	0	24	24	24	0	0	0
32	3-19	24	0	24	24	24	0	0	0
33	3-20	24	0	24	24	24	0	0	0
34	3-21	24	0	24	24	24	0	0	0
35	3-22	24	0	24	23	23	0	0	0
36	3-23	24	0	24	22	22	0	0	2

(continued)

TABLE 3-20 (continued)

Data day No.	Date in 1980	Normal process operation	Process downtime (abnormal operation)	Inlet data capture	Outlet data capture	Efficiency data capture	O_2 monitor downtime	SO_2 monitor downtime	Sampling interface downtime
37	3-24	24	0	24	19	19	0	0	0
	3-25	24	0	24	0	0	0	10	14
	3-26	24	0	24	15	15	0	0	9
38	3-27	24	0	24	24	24	0	0	0
	3-28	24	0	17	17	17	0	7	0
	3-29	24	0	16	16	16	0	8	0
	3-30	24	0	24	14	14	0	0	10
39	3-31	24	0	24	19	19	0	0	5
40	4-1	24	0	24	24	24	0	0	0
41	4-2	24	0	24	24	24	0	0	0
42	4-3	24	0	24	22	27	0	2	0
	4-4	9	0	9	9	9	0	0	0

TABLE 3-21. SUMMARY OF PROCESS AND CEM OPERATIONS DURING TEST

Parameter	Hours
Total time in operating period	1755.25
Total boiler operating time	1755.25
Total FGD system operating time	1604.5
Total time of representative FGD system operation	1604.5
Total inlet data capture time	1535.5
Total outlet data capture time	1298.25
Total efficiency data capture time	1238.25
O_2 monitor downtime	47.5
SO_2 monitor downtime	54.75
Inlet sampling interface downtime	0
Outlet sampling interface downtime	240.25
Simultaneous downtime of inlet and outlet sampling interface	0
FGE system downtime	150.5
Boiler downtime	0
Total time of unrepresentative FGD system operation	0

TABLE 3-22. MAINTENANCE RECORD OF MONITOR COMPONENTS

Component	Failure	Data hours	Subtotal
460 SO_2	Vacuum loss	9	
	Aspirator installation	1.5	
	Cell windows	2	
	Balston filter	4	16.5
WDG III	Plugging	3.5	3.5
Recorder	Writing gear	57	57
Sample interface	Plugging	173	
	Leaking	1.5	174.5
Miscellaneous	Air supply	17	
	Power failure	6	
	Routine calibration	14	37
Total			288.5

CEM Problems--

The only apparently unsolvable problem that occured with CEM operations was the recurrence of outlet probe filter pluggage. The remedy for the problem was replacement of probe filters when they showed signs of plugging, but this was generally an unsatisfactory solution because pluggage frequently occurred at night, when CEM operators were not present. Large periods of data loss in excess of 6 hours per 24-hour day resulted. Two major factors contributed to the high incidence of this problem:

1. High mist carryover from the FGD process through the test period. This was evidenced by a very obvious rainout downwind of the stack and heavy accumulations of wet slurry on the outlet probe.

2. Oil in the probe filter blowback air supply. This was noticed regularly during the test period, and probably contributed to the unusually high incidence of probe pluggage.

3.4 QUALITY ASSURANCE

A quality assurance (QA) program was performed to support the reliability of the data between initial P/S testing and completion of data collection. In addition to the records of CEM operation summarized in Subsection 3.3, manual methods tests for system relative accuracy and CEM moisture values.

3.4.1 System Relative Accuracy Tests

System relative accuracy tests were performed at the completion of the test period. The results of the QA system relative accuracy tests are presented in Tables 3-23 to 3-25.

TABLE 3-23. RELATIVE ACCURACY OF INLET SO_2 ANALYZER
(ppm of SO_2)

Run	Date	Reference method	Analyzer ppm wet[a,b]	Analyzer ppm dry[c]	Difference
1	3/30/79	859	803	821	-38
2	3/30/79	741	695	711	-30
3	3/30/79	781	840	860	79
4	3/30/79	734	742	759	25

Mean reference method = 779 ppm
Mean difference = 9 ppm
CI_{95} = 86.6 ppm
Accuracy = 12.3%

[a] Mean moisture = 2.2%.

[b] Analyzer reading = 15 minute interval.

[c] Analyzer, dry (analyzer, wet) x $\frac{100}{100 - (\text{mean moisture})}$

TABLE 3-24. RELATIVE ACCURACY OF OUTLET SO_2 ANALYZER
(ppm of SO_2)

Run	Date	Reference method	Analyzer ppm wet[a,b]	Analyzer ppm dry[c]	Difference
1	4/3/79	190	169	182	-8
2	4/3/79	160	177	191	31
3	4/3/79	205	183	197	-8
4	4/3/79	255	251	271	16

Mean reference method = 202.5 ppm
Mean difference = 7.8 ppm
CI_{95} = 30.5 ppm
Accuracy - 18.9%

[a] Mean moisture = 2.2%.

[b] Analyzer reading = 15 minute interval.

[c] Analyzer, dry = (analyzer, wet) x $\frac{100}{100 = (\text{mean moisture})}$

TABLE 3-25. RELATIVE ACCURACY OF O_2 ANALYZER
(percentge of O_2)

Test	Date	Method 3 % dry	Analyzer ppm wet[a,b]	Analyzer ppm dry[c]	Difference
1	4/3/79	15.9	15.2	15.5	-0.4
2	4/3/79	15.3	15.3	15.6	-0.3
3	4/3/79	15.5	15.7	16.0	-0.5
4	4/3/79	12.7	13.8	14.1	-1.4
5	4/3/79	16.4	16.3	16.6	0.2
6	4/3/79	15.0	15.3	15.6	-0.6

Mean difference = -0.5%
CI_{95} = 0.57%
Accuracy = 1.07%

[a] Mean moisture = 2.2%.

[b] Analyzer reading = 15 minute averages.

[c] Analyzer, dry = (analyzer, wet) x $\frac{100}{100 - (\text{mean moisture})}$

3.4.2 CEM Sample Moisture Determination

The CEM moisture values used in calculations were determined from manual tests and checked to ensure that they did not exceed the lowest dewpoint before analysis in the O_2 and SO_2 monitors. The values are presented in Tables 3-26 and 3-27.

TABLE 3-26. INLET MOISTURE TESTS USING REFERENCE METHOD 4 (percentage of moisture)

Date	Test 1	Test 2	Test 3	Average
2/4/79	2.7	3.8	3.9	3.5
2/4/79	2.9	3.1	3.1	3.0
2/4/79	2.7	3.4	3.6	3.2
2/10/79	3.6	3.6	3.4	3.5
3/22/79	2.8	1.8	1.1	1.9
3/30/79	2.4	2.5	1.6	2.2

TABLE 3-27. OUTLET MOISTURE TESTS USING REFERENCE METHOD 4 (percentage of moisture)

Date	Test 1	Test 2	Test 3	Average
1/31/79	7.8	8.6	10.8	9.1
2/1/79	9.9	8.4	8.7	9.0
2/10/79	7.9	9.8	10.9	9.5
3/21/79	4.2	9.3	7.7	7.1
4/5/79	3.4	2.7	2.5	2.9

SECTION 4

PROCESS DESCRIPTION

4.1 PHYSICAL PLANT

Table 4-1 lists process information.

4.1.1 Boiler System

The boiler system consists of six industrial-size boilers designed to supply high-temperature water for building and water heating at the base. The five older boilers are rated at 30 x 10^6 Btu/h, and the newer boiler is rated at 60 x 10^6 Btu/h. The boilers are stoker fired, with coal spread on under-air-flow perforated grates and burned at a typical ash bed depth of 3 to 5 inches. Grates are mechanically rotated in all but the oldest operating boiler to remove ash to the pneumatic disposal system. Ash must be removed manually from the grate of the oldest unit in operation.

4.1.2 FGD System

The FGD system consists of a mechanical collector, Swedish Bahco scrubber tower, lime storage and handling system, clarifier (thickener), booster fan, sludge disposal pond, and associated duct work, pumps, and controls.

Untreated flue gas from the individual boilers enters a common header equipped with a bypass stack and is fed through a mechanical collector where primary particulate removal takes

TABLE 4-1. PROCESS INFORMATION FOR RICKENBACKER AIR FORCE BASE

Installation name	Rickenbacker Air Force Base (Rickenbacker Air National Guard Base)
Installation location	Columbus, Ohio
Fuel characteristics	Coal (3.6% sulfur)
Total rating	55,000 scfm
Number of separate FGD units	1
Number of boilers	6
Source capacity	210×10^6 Btu/h
Control system vendor	Research-Cottrell/Bahco
Control process	Limestone or lime scrubbing
Type of FGD system	Retrofit
Startup date	March 1976
Control system status	Operational
SO_2 removal efficiencies	90%+ design with lime operation; lower with limestone operation
Particulate removal efficiency	98% design
Water makeup	Open loop
Sludge or byproduct disposal	Unstabilized $CaSO_3/SO_4$ sludge to lined pond

place. The mechanical collector has a design removal efficiency of 70 percent and was installed primarily to reduce wear on the booster fan, which is located immediately downstream. Figure 4-1 is a series of photographs of the FGD system. The fan introduces the partially cleaned flue gas into the scrubbing tower where SO_2 removal takes place.

The scrubber is a vertical tower consisting of two inverted venturi scrubbing stages. Untreated gas is introduced into the first stage, where it is diverted downward to impinge on the liquid slurry surface of the mill. The gas then rises through the first stage venturi, where it intimately mixes with the slurry droplets now entrained in it. The partially scrubbed gas is then diverted downward onto the liquid slurry surface in the second stage pan, and the process is repeated. The treated gas is then directed upward into a cyclonic mist eliminator where entrained slurry droplets are removed, and then emitted through a stub stack to the atmosphere.

The reagent for the scrubbing system is normally a fine mesh limestone although pebble lime slurry was utilized as reagent for initial testing conducted by Research Cottrell. The limestone is mixed with water and added directly to the slurry in the dissolving tank.

The spent scrubbing solution is discharged to the thickener where waste solids settle out. Thickener overflow is returned to the mixing tank. Underflow from the thickener is discharged to a 5-acre Hypalon-lined disposal pond located approximately

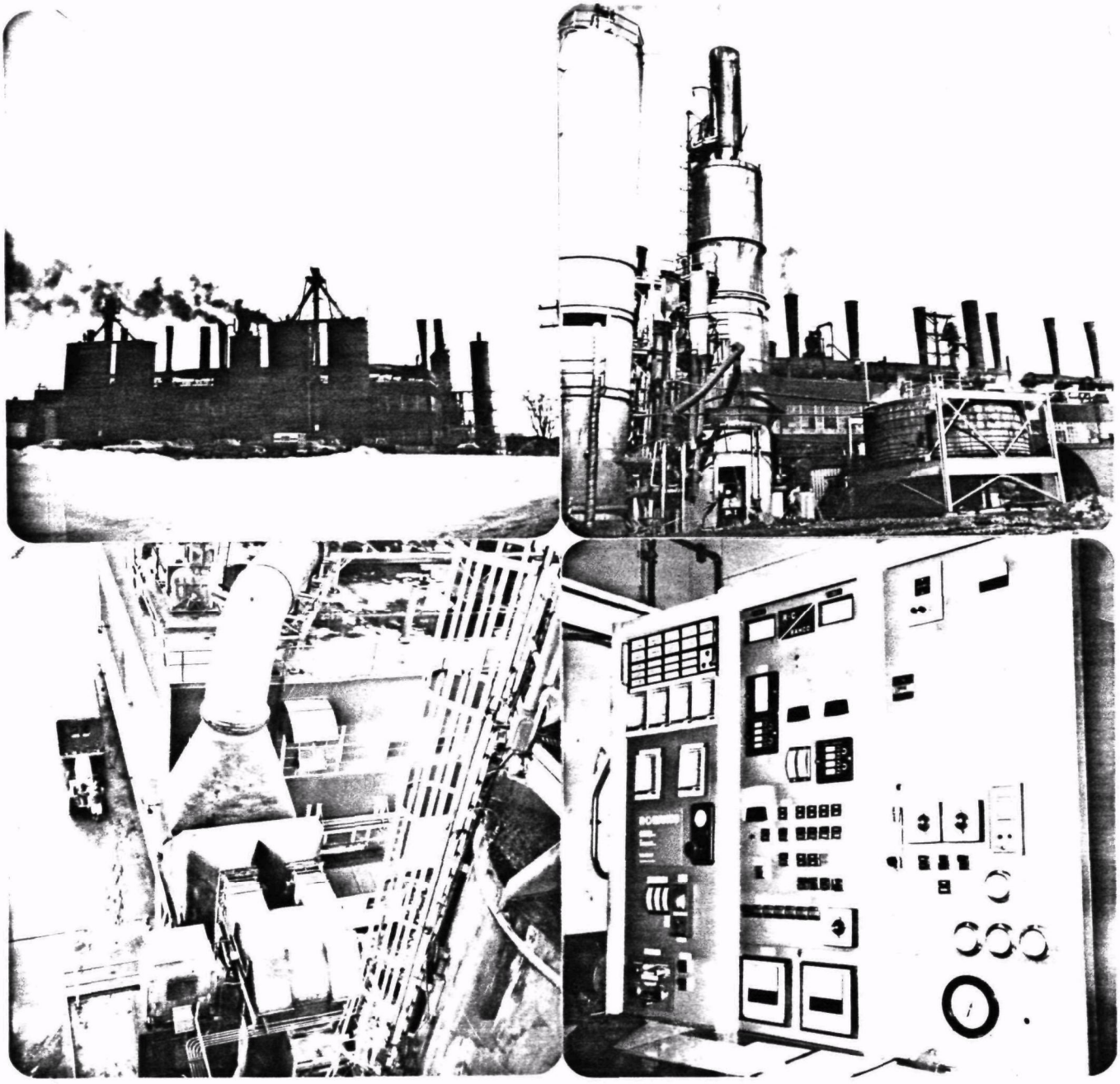

UPPER LEFT: CENTRAL HEAT PLANT
LOWER LEFT: MECHANICAL COLLECTOR AND FORCED-DRAFT FAN

UPPER RIGHT: REAR VIEW OF R-C/BAHCO FGD UNIT
LOWER RIGHT: FGD CONTROL PANEL

Figure 4-1. Photographs of central heat plant and FGD system at Rickenbacker Air Force Base.

400 feet from the FGD system. Figure 4-2 is a flow diagram of the Research-Cottrell (R-R)/Bahco scrubbing system.

4.2 BACKGROUND INFORMATION

4.2.1 Boiler System

Seven stoker-fired boilers, each rated at 31 x 10^6 Btu/h capacity were originally installed between 1954 and 1956. In June 1977, a new stoker-fired boiler rated at 60 x 10^6 Btu/h came into service to replace two of the older units, which have now been demolished.

4.2.2 FGD System

The FGD system was retrofitted to the boiler system and was placed in service in March 1976. It was manufactured by A.B. Bahco Ventilation of Enkoping, Sweden, and installed by Research-Cottrell. Following initial testing using lime as a scrubbing reagent, it has operated mainly on cheaper, less reactive limestone, because such operation was sufficient to meet local requirements for SO_2 removal.

4.3 PROCESS CONTROL DURING TEST

4.3.1 Boiler System

During the test the boiler system was operated in normal fashion. Generally, three to five boilers were sufficient to meet heat demand during the period, with the remainder on standby status.

Coal for firing was loaded through underground transfer chutes from the reserve coal pile or coal delivery trucks.

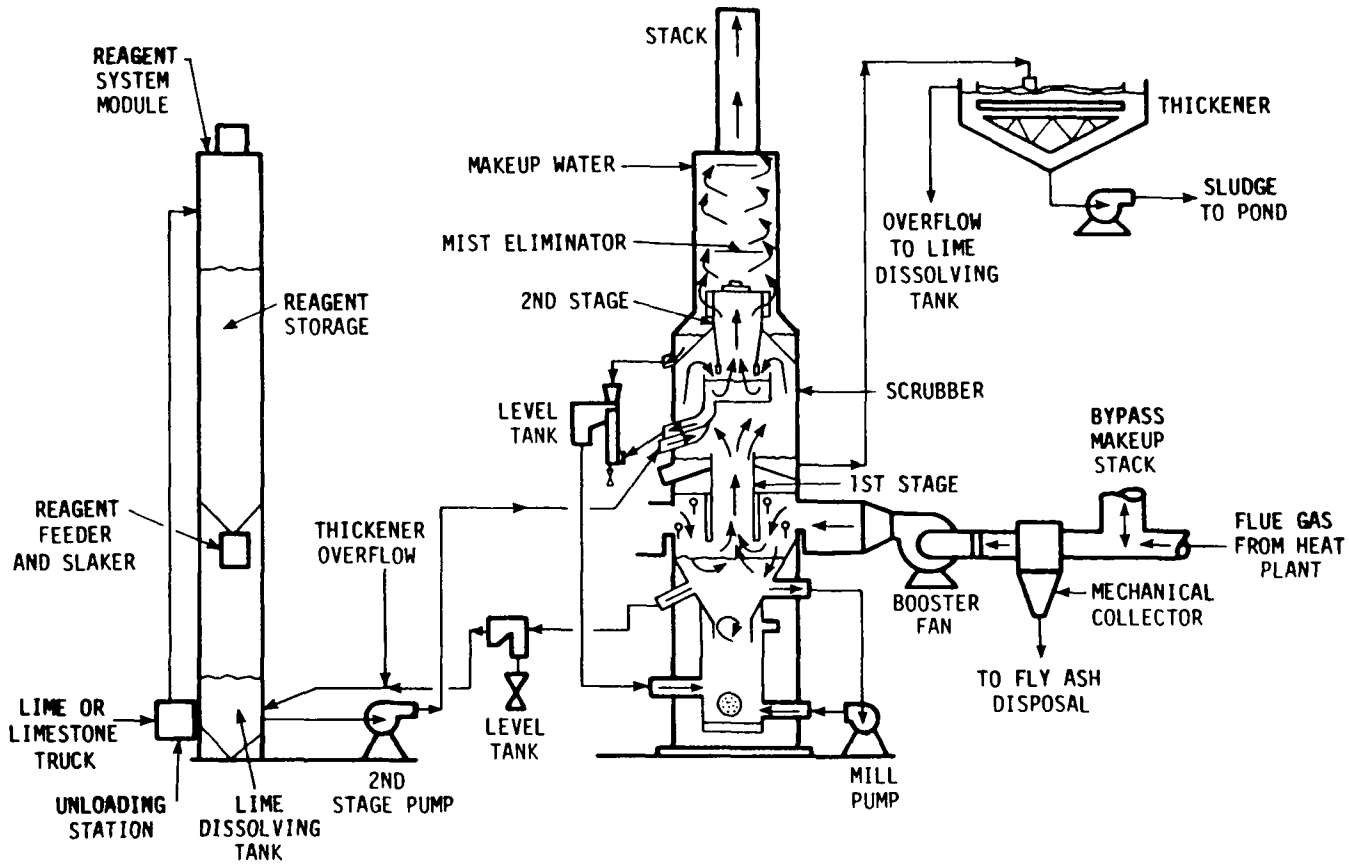

Figure 4-2 . R-C/Bahco scrubbing system flow diagram.

The coal was transferred to silos, before loading to the gravity hoppers at the boiler stokers.

4.3.2 FGD System

During the test period, the limestone feed rate from storage to the slaker and adjustment of pressure drop across scrubber stages were the only significant controls having an effect on SO_2 removal efficiency.

SECTION 5

CONTINUOUS EMISSION MONITORING SYSTEM DESCRIPTION

The CEM consisted of an SO_2 monitoring system permanently installed at the plant with an O_2 monitor temporarily installed for the purpose of the test. Additional changes made to the existing system included repositioning the inlet and outlet probes to ensure sampling from centroid cross sectional areas of the ducts, installation of recorders with greater data resolution than existing equipment, and installation of a calibration gas delivery system. Figure 5-1 shows sampling locations in regards to FGD process, and Figure 5-2 is a simplified schematic of the CEM. This section describes the CEM components.

5.1 SAMPLING INTERFACE

The monitoring system utilized a DuPont 460 instrument system to provide the extractive sample from both sampling locations. Sample gas was pulled through a stainless steel mesh filter screen inside the duct through a heated probe equipped with a blowback system, and into a heated teflon sample line. Figure 5-3 is a wiring schematic of probe blowback system and Figure 5-4 is a series of photographs showing sample probes after repositioning. The samples were then drawn to the monitor, which was located in the FGD systemcontrol room at ground level.

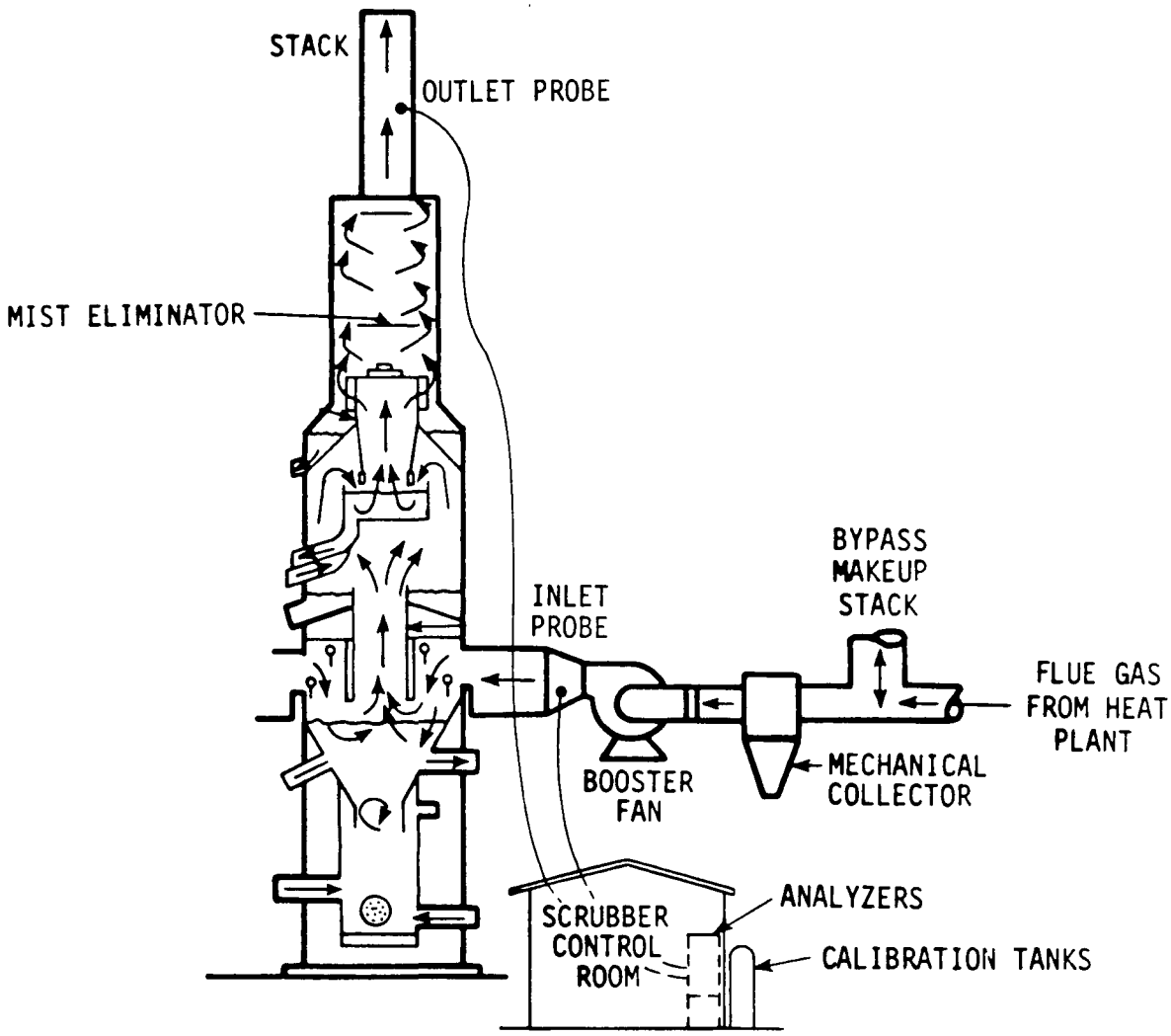

Figure 5-1. Sampling locations after modifications.

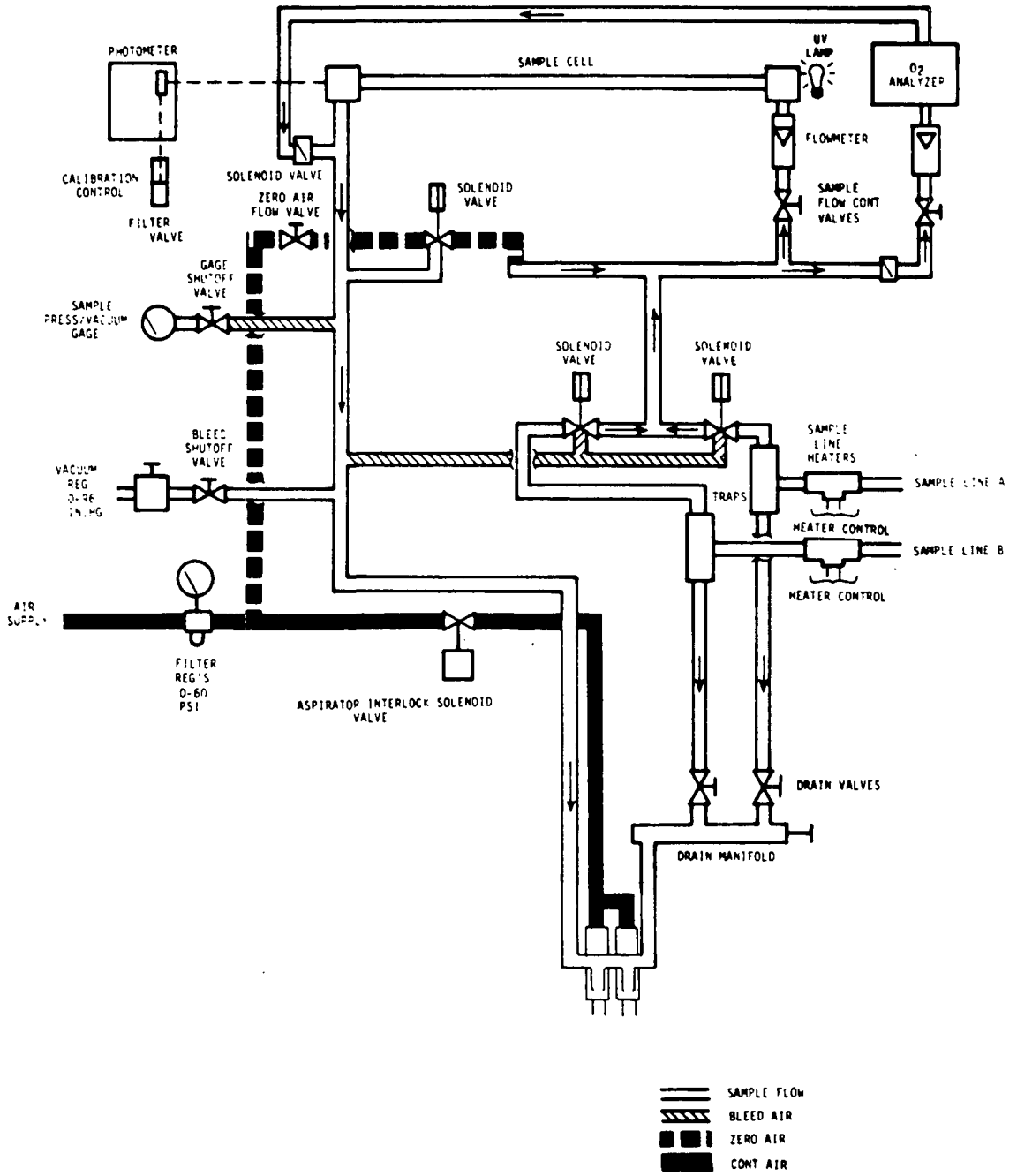

Figure 5-2. Flow diagram of Dupont 460 SO_2 analyzer with Thermox WDG III O_2 analyzer.

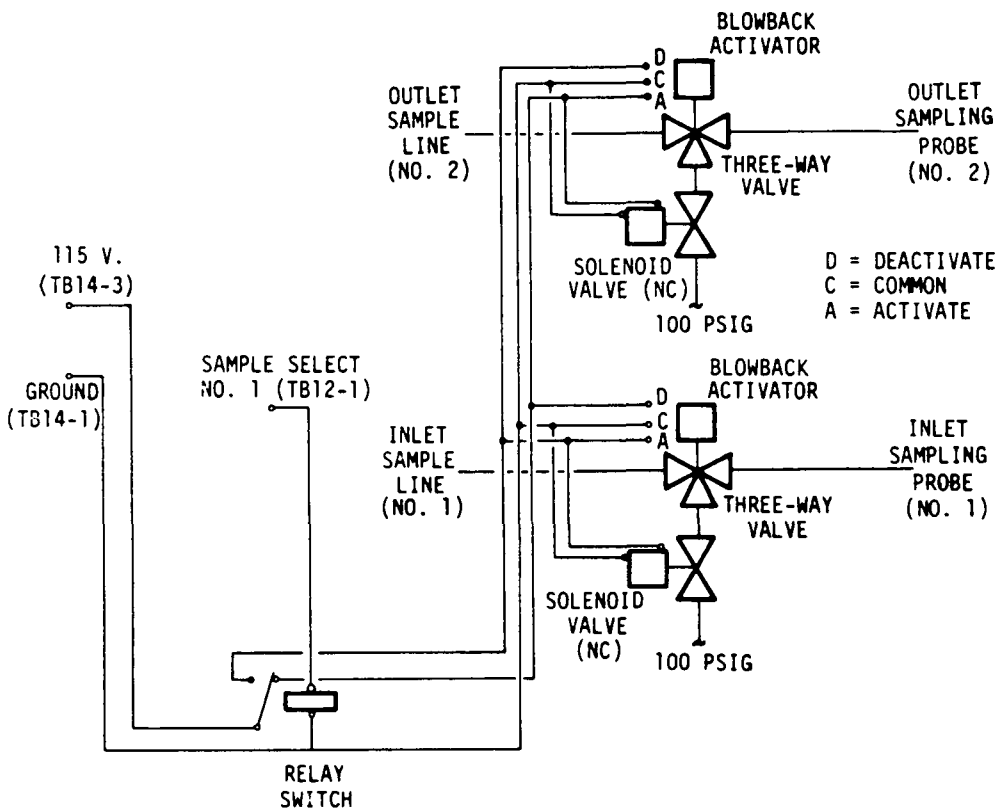

Figure 5-3. Wiring schematic for blowback assembly.

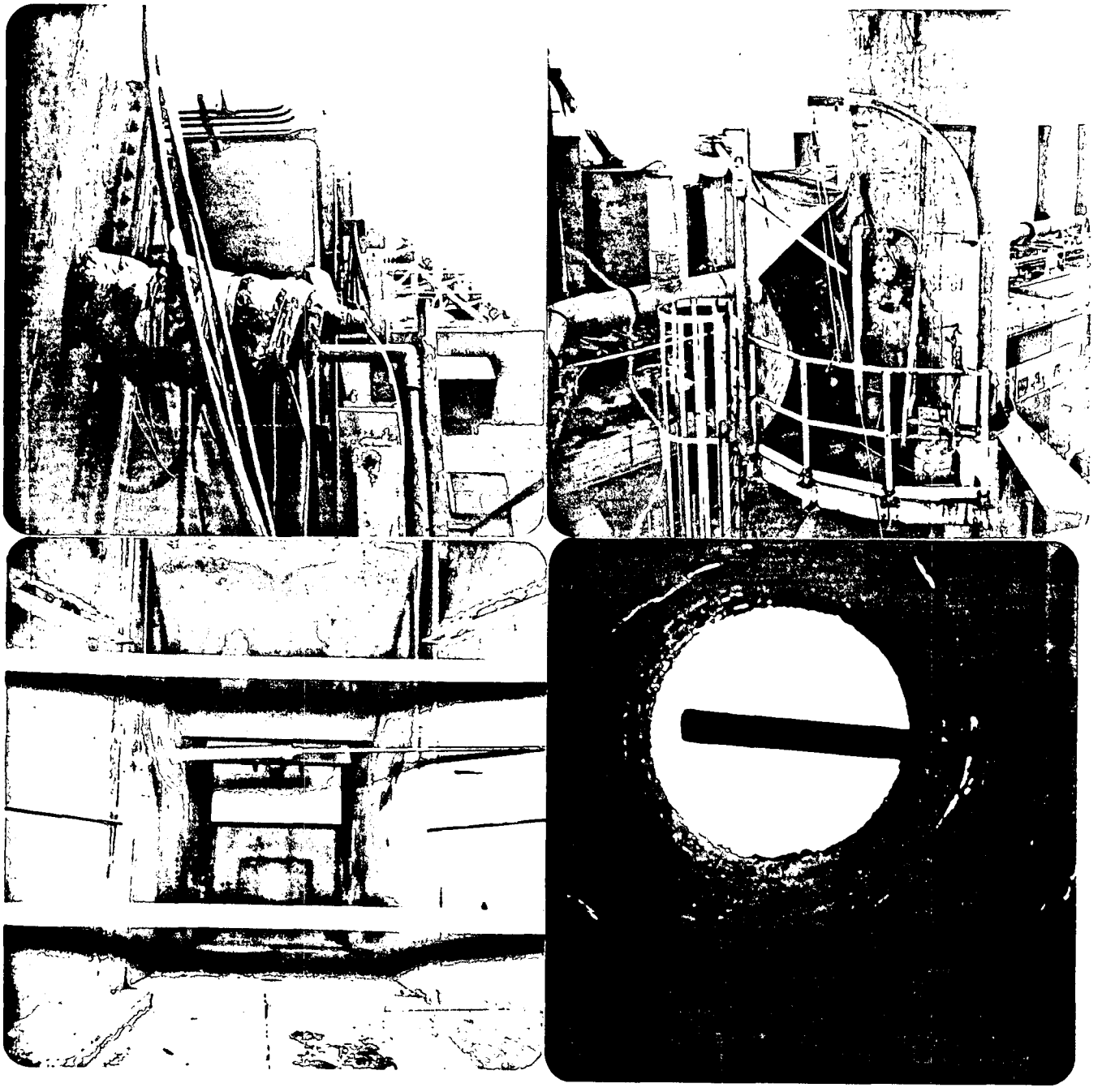

UPPER LEFT: EXTERNAL VIEW OF INLET PROBE (INSULATED)
LOWER LEFT: INTERNAL VIEW OF INLET PROBE

UPPER RIGHT: OUTLET PROBE SHELTER
LOWER RIGHT: INTERNAL VIEW OF OUTLET PROBE

Figure 5-4 Photographs of probe placement after modification.

The differentiation between sampling the two different sample gas streams was controlled automatically on a 10-minute cycle by the DuPont unit. A sidestream sample for the oxygen monitor was taken from the unit in a flow fashion parallel to the SO_2 analysis cell. The sample dewpoint was controlled by temperature-constant mist knockout traps upstream from SO_2 and O_2 analysis. The dewpoint of SO_2 samples were held at a maximum of approximately 120°F and 5 in. Hg vacuum; O_2 sample dewpoints were held at a maximum of 68°F and 5 in. Hg vacuum.

5.2 SO_2 MONITOR

The SO_2 monitor was a DuPont 460 analyzer, which measures SO_2 by ultraviolet spectrophotometry. This is accomplished by drawing a sample into a windowed cell, passing ultraviolet light through the sample, and measuring the photometric output obtained in a wavelength specific to SO_2 absorption. Inlet and outlet samples are differentiated by electronic track and hold circuits that are actuated by the timing mechanism that controls the sample flow. An automatic zeroing system operated on the sample cycle, correcting for fluctuations and drift every 10 minutes.

5.3 O_2 MONITOR

The O_2 monitor was a Thermox WDG III analyzer, which measures O_2 by electrochemical means across a heated zirconium oxide cell. Sample gas flow was provided by the DuPont 460 unit. The inlet and outlet sample streams were differentiated by the occurrence of a purge function in the 10-minute cycle, which showed as an off-scale spike on the recorder chart.

5.4 RECORDERS

Leeds and Northrup Speedomax recorders were used to collect the data for the SO_2 and O_2 monitors. A dual-point recorder was used for the SO_2 data; a single-point recorder, for the O_2 data. The recorders were located in the FGD system control room with the analyzers. Time-marked charts were used to simplify data reduction.

5.5 CALIBRATION SYSTEM

A calibration system was used that included certified calibration gas cylinders and a valving system to facilitate introduction of gases to the CEM sampling interface. Zero, midscale (50% scale), and span (90% scale) gas concentrations were provided for the ranges used in analysis (0 to 500 ppm SO2, 0 to 5000 ppm SO_2, and 0 to 25% O_2).

SECTION 6

PROCEDURES AND CALCULATIONS

6.1 CONTINUOUS SO_2 DATA COMPUTATIONS

Sulfur dioxide data computation was performed with a Hewlett-Packard 3000 computer system. Raw data were loaded into the program, and complete listing of emission rates and scrubber efficiencies were printed out for the entire test period.

6.1.1 Activities Before Computer Run

Keypunch Card Preparation--

Raw data were reduced and transcribed onto load sheets for keypunching onto computer cards. Additional cards were prepared to identify the data listings by location and date and to provide comments explaining cause and duration of data loss.

Comment cards were prepared by reference to CEM operator's logs and strip charts. Raw data load sheets, containing 15-minute listings of SO_2 and O_2 data and moisture, calibration data, and boiler information were prepared in the following manner:

1. The SO_2 and O_2 data were determined by processing raw strip charts through the use of a data digitizing device, which converted recorder deflections to digital values. The operation was manually performed, with readings for inlet and outlet SO_2 and O_2 being obtained and transcribed on a 15-minute basis.

2. Moisture determinations for each parameter were entered on the basis of availability of test data. Separate determinations were entered for inlet and outlet SO_2 and O_2. Separate determinations were also made for SO_2 and O_2 analysis, because the O_2 monitor operated with an ambient temperature sample line, which tended to remove some moisture.

3. Changes in monitor calibration caused by 24-hour drift were compensated for by entering span gas readings for each parameter on a 6-hour basis. These readings were interpolated from calibration information.

4. Boiler heat rates were taken from plant operating records, which contained summarized heat production rates in terms of 10^6 Btu/h. These were calculated by plant personnel as a determination from total boiler pressure and temperature differentials. The values were transcribed onto the load sheets on an hourly basis.

Other Computer Entries--

Calibration entries and boiler heat units were entered into the program before data runs to differentiate the computation from runs of other data using different values. Calibration entries needed were assays of the span gases used to obtain the readings keypunched with the data. The boiler heat unit entry signalled the proper heading for the listing of heat rates to be 10^6 Btu/h.

6.1.2 Computation and Listing of Data

Data computation was performed once the cards were loaded into the program, and listings were produced. Separate listings were produced for 15-minute SO_2 and O_2 readings; 1-hour average inlet emission rate (Ein), outlet emission rate (Eout), and removal efficiency (Eff); and 24-hour average Ein, Eout, and Eff. Listings also included total averages for 1-hour and 24-hour Ein, Eout, and Eff.

15 Minute Listings--

Complete 15-minute listings were prepared from the information loaded on the cards. These listings presented the following information:

1. Heading, identifying the source and date on each page of listings.

2. Raw CEM data, corrected for calibration, but on a wet basis, presented on a 15-minute basis.

3. Moisture data for each gas stream in percent H_2O, presented on a 15-minute basis.

4. Corrected CEM data, calculated by multiplying raw data by the quantity 100/(100-M), where M equals the moisture percent.

5. Average Ein, Eout, and Eff, calculated on an hourly basis from average corrected SO_2 and O_2 data. The following equaitons were used:

$$\text{lb } SO_2/10^6 \text{ Btu} = (\text{ppm } SO_{2\,dry})(9820)(1.64 \times 10^{-7}) \times \frac{(20.95)}{(20.95 - \%\, O_2 dry)} \qquad \text{(Eq. 6-1)}$$

where 9820 = bituminous coal factor for dscf/10^6 Btu, utilizing excess air factor

1.64×10^{-7} = conversion of ppm SO_2 to lb SO_2/dscf

$\frac{20.95}{(20.95 - \%\, O_2 dry)}$ = excess air factor

$$Eff = \frac{Ein - Eout}{Ein} \times 100 \qquad \text{(Eq. 6-2)}$$

Two data points per hour were needed for a calculation to be performed. Equation 6-1 was used to calculate Ein and Eout, and Equation 6-2 was used to calculate Eff.

6. Boiler information, printed in 10^6 Btu/h on an hourly average basis.

7. Comments, printed as entered in the appropriate locations to identify data loss periods.

8. Data loss periods, signified by repetition of previous listed number, or with the printing of ### symbols.

1-Hour and 24-Hour Listings and Averages--

Hourly averages of Ein, Eout, and Eff and boiler heat rates were obtained from calculations performed during computation of 15-minute listings. These were compiled to form hourly and daily listings of data on a 1-hour and 24-hour averaging basis. Each listing was summarized in a brief statistical format that listed the data quantity base, minimum and maximum values, mean, and standard deviation for each parameter. Total test averages were grouped into time periods determined by a 30 day limitation on data averaging. The individual listing and averaging procedures are described below:

1. Hourly listings were compiled for each 24-hour calendar day with statistical determinations performed for each parameter that had an occurrence of 75 percent or greater (eighteen 1-hour averages per 24-hour day). For each parameter that met the 75 percent data capture condition, the hourly and daily averages were stored for future computation.

2. The total hourly averages from periods of 75 percent data per day were run through statistical determinations for each parameter. These computations were performed for the groupings determined by the 30-day data computation limitation. For determination of 30-day data, data days were included that listed 18 or more hours of data capture for any parameter (excluding heat rates), even if FGD efficiency was not determined during a particular day.

3. The 24-hour listings and averages were performed for the 30-day data groupings described above. All data representing 18 or more hours of data capture per day of Ein, Eout, or Eff were listed. Statistical determinations were performed on the 30-day data groupings independently and presented following each listing.

6.2 PERFORMANCE SPECIFICATION TESTING

The P/S test procedures and calculations were in accordance with guidelines specified by Performance Specifications 2 and 3 in the Federal Register, Vol. 44, No. 197, October 10, 1979. Manual Methods 3 and 6 were performed to complete system relative accuracy tests. In addition to the procedures outlined below pertaining to the performance of these tests, procedures were needed to ascertain CEM outputs correctly. The procedures and calculations employed for determining CEM outputs in the field are outlined in Section 6.5.

6.2.1 Calibration Gas Certification

All SO_2 and O_2 calibration gases were traceable to NBS standards. The procedures for establishing traceability are outlined below.

Sulfur Dioxide Calibration Gas Certification--

The SO_2 calibration gases were supplied with certificates of analysis from the vendors establishing that the gases were analyzed by an acceptable instrument technique using calibration with NBS standards.

Oxygen Calibration Gas Certification--

The O_2 midrange (12%) was analyzed by ORSAT (EPA Method 3) and found to have a value within 5 percent of the vendor's tag value. The tag value was thus certified as acceptable. Ambient air was used as an O_2 span value calibration gas and needed no certification testing to establish its oxygen concentration.

6.2.2 Conditioning Period

The conditioning period was noted as beginning once the complete CEM, as described in Section 5, was determined to be fully operational. After 168 hours of continuous operation without modification or maintenance except as specified as routine and/or necessary by the CEM analyzer manufacturers, the period was deemed successfully completed.

6.2.3 Operational Test Period

Because of the extensive nature of the P/S testing (involving two complete sets of tests) and the short period of data acquistion (spanning less than 2 months), no distinct period of 168 hours was set aside, and the entire period of data acquisition was involved in operation testing. The QA testing was in providing continuity between initial and final P/S testing. The P/S tests procedures followed during this period are outlined below.

Calibration Error--

Both operational ranges of the SO_2 monitor and the single operational range of the O_2 monitor were involved in this test. Calibration values of midrange and span gases were used as determined in Section 6.2.2. The individual checks were performed by running zero, midrange, and span gases in random order through the monitors until five complete sets (15 data points) for each operating range were obtained. Figure 6-1 presents a sample data sheet and the equations used to determine calibration error.

Run no.	Calibration gas concentration, ppm	Measurement system reading, ppm	Arithmetic differences, ppm	
	A	B	A-B	
			Mid	High
1				
2				
3				
4				
5				
6				
7				
8				
9				
10				
11				
12				
13				
14				
15				
Arithmetic Mean ▪				
Confidence Interval ▪				
Calibration Error ▪				

Arithmetic Mean (AM) $= \frac{\Sigma x}{n}$

95% Confidence Interval (CI_{95}) $= \frac{t_{0.975}}{n\sqrt{n-1}} \sqrt{n\Sigma(x^2) - (\Sigma x)^2}$

Calibration Error $= \frac{|AM| + CI_{95}}{RV}$

where
x = arithmetic difference, ppm
n = number of data points
RV = calibration gas concentration, ppm
$t_{0.975}$ = t value as shown below

n^a	$t_{0.975}$	n^a	$t_{0.975}$	n^a	$t_{0.975}$
2	12.706	7	2.447	12	2.201
3	4.303	8	2.365	13	2.179
4	3.182	9	2.306	14	2.160
5	2.776	10	2.262	15	2.145
6	2.571	11	2.228	16	2.131

[a] Values are already corrected for n-1 degrees of freedom; use n equal to the number of individual values.

Figure 6-1. Sample data sheet and equations for the determination of calibration error.

System Response Time--

Both SO_2 operating ranges and the single O_2 operating range were checked for response time. The procedure entailed the alternating introduction of zero and span gases into the system and the recording of elapsed time between introduction and a stable reading. During the tests, gases were introduced to the sampling interface at the probe mountings, so that the response time included any lag caused by the sample line length. Gas flow rates during these tests were consistent with normal sampling procedures. Three sets of zero-to-span and span-to-zero checks were performed for each parameter. Response from either span or zero calibration gas to flue gas was not used because of minute-to-minute variability of flue gas readings, leading to inconsistent results. Figure 6-2 presents a sample data sheet and the equations used to determine system response time.

2-Hour Zero and Calibration Drift--

Both SO_2 operating ranges and the single O_2 operating range were tested to determine 2-hour drift. The strategy was to introduce consecutively zero and span gas at 2-hour intervals until 15 sets of data were obtained. Figure 6-3 presents a sample data sheet and the equations used.

24-Hour Zero and Calibration Drift--

Both SO_2 operating ranges and the single O_2 operating range were tested to determine 24-hour drift. Initial readings were

Date_____ High-level = _____ ppm

Test Run	Upscale, min	Downscale, min
1		
2		
3		
Average	A =	B =

System Response Time (slower of A and B) = _____ min.

Average $= \frac{\Sigma x}{n}$

$\frac{|A-B|}{(\text{Slower of A and B})} \times 100 \leq 15\%$; otherwise retesting is required.

where x = individual response, minutes
n = number of test runs (3)

Figure 6-2. Sample data sheet and equations for determination of system response time.

Data set no.	Date	Time		Zero Rdg		Zero drift	Hi-level Rdg		Span drift	Calib. drift
		Begin	End	Init. A	Fin. B	C=B-A	Init. D	Fin. E	F=E-D	G=F-C
1										
2										
3										
4										
5										
6										
7										
8										
9										
10										
11										
12										
13										
14										
15										
Arithmetic Mean										
Confidence Interval										
Zero Drift							Calibration drift			

Arithmetic Mean (AM) $= \frac{\Sigma x}{n}$

95% Confidence Interval (CI_{95}) $= \frac{t_{0.975}}{\sqrt{n-1}} \sqrt{n\Sigma(x^2) - (\Sigma x)^2}$

Zero or Calibration Drift (SO_2 monitor) $= \frac{|AM| + CI_{95}}{RV} \times 100$

Zero or Calibration Drift (O_2 monitor) $= (|AM| + CI_{95}) \times 0.25$

where
x = individual drift, %
n = number of data points (15)
Zero RV = total scale, % (100)
Calibration RV = calibration gas assay multiplied by 100 and divided by the range, ppm
$t_{0.975}$ = t value as shown below
0.25 = conversion of % scale to % O_2

n[a]	$t_{0.975}$	n[a]	$t_{0.975}$	n[a]	$t_{0.975}$
2	12.706	7	2.447	12	2.201
3	4.303	8	2.365	13	2.179
4	3.182	9	2.306	14	2.160
5	2.776	10	2.262	15	2.145
6	2.571	11	2.228	16	2.131

[a] Values are already corrected for n-1 degrees of freedom; use n equal to the number of individual values.

Figure 6-3. Sample data sheet and equations for determination of 2-hour zero and calibration drift.

obtained for each 24-hour period by calibrating each instrument and recording the zero and span readings after calibration. Final readings were obtained by recording the precalibration zero and span readings on the following day. A complete set of data for 24-hour drift determination consisted of seven consecutive 24-hour drift determinations. Figure 6-4 presents a sample data sheet and the equations used.

System Relative Accuracy--

System relative accuracy tests consisted of comparing CEM and reference method determined parts per million SO and O_2 concentrations.

The CEM determinations were obtained by utilizing integrated averages of monitor output. Reference method determinations were obtained using Methods 6 and 3 for SO_2 and O_2. Moisture determinations were performed to enable comparison of CEM and reference method results on a dry basis. Guidelines provided by Performance Specification 2 in the Federal Register, Vol. 44, No. 197, October 10, 1979, were followed.

1. Reference Method 6 samples were collected in an integrated sampling train from a probe situated in the same cross-sectional centroidal area (<5% stack diameter) as the CEM probe tip. Reference Method 3 bag samples were collected from the same sampling point.

2. Nine conccurrent Reference Method 3 and 6 tests were performed to complete each set of system relative accuracy data. At any given sampling site (inlet or outlet of FGD system), no more than one test per hour was allowed. The tests were performed when the CEM was in the normal data collecting mode, without interference from 2-hour drift, calibration error, response

Data set no.	Date	Time Begin	Time End	Zero Rdg Init. A	Zero Rdg Fin. B	Zero drift C=B-A	Hi-level Rdg Init. D	Hi-level Rdg Fin. E	Span drift F=E-D	Calib. drift G=F-C
1										
2										
3										
4										
5										
6										
7										
Arithmetic Mean										
Confidence Interval										
					Zero drift				Calibration drift	

$$\text{Arithmetic Mean (AM)} = \frac{\Sigma x}{n}$$

$$\text{95\% Confidence Interval } (CI_{95}) = \frac{t_{0.975}}{\sqrt{n-1}} \sqrt{n\Sigma(x^2) - (\Sigma x)^2}$$

$$\text{Zero or Calibration Drift } (SO_2 \text{ monitor}) = \frac{|AM| + CI_{95}}{RV} \times 100$$

$$\text{Zero or Calibration Drift } (O_2 \text{ monitor}) = (|AM| + CI_{95}) \times 0.25$$

where
x = individual drift, %
n = number of data points (7)
Zero RV = total scale, % (100)
Calibration RV = calibration gas assay multiplied by 100 and divided by the range, ppm
$t_{0.975}$ = t value as shown below
0.25 = conversion of % scale to % O_2

n[a]	$t_{0.975}$	n[a]	$t_{0.975}$	n[a]	$t_{0.975}$
2	12.706	7	2.447	12	2.201
3	4.303	8	2.365	13	2.179
4	3.182	9	2.306	14	2.160
5	2.776	10	2.262	15	2.145
6	2.571	11	2.228	16	2.131

[a] Values are already corrected for n-1 degrees of freedom; use n equal to the number of individual values.

Figure 6-4. Sample data sheet and equations for determination of 24-hour zero and calibration drift.

time, or 24-hour calibration tests. Samples were synchronized with CEM 10-minute sampling cycles to allow three separate CEM measurements to be averaged for each test.

3. The CEM data were determined from recorded strip charts in terms of SO_2 and O_2 concentration on a wet basis. Three readings of each were averaged for each test. Reference moisture data were used (after correction for CEM dewpoint) to convert CEM SO_2 and O_2 readings to a dry basis. Emission rates in terms of lb $SO_2/10^6$ Btu were then determined by Equation 6-1. The CEM and reference method data and calculated emission rates were recorded, and correlations were determined on data sheets. Figure 6-5 presents a sample data sheet and the equations used to determine system relative accuracy.

6.3 DETERMINATION OF FACTORS ACCOUNTING FOR DATA CAPTURE AND LOSS PERIODS

6.3.1 FGD Determinations

Operability, reliability, availability, and utilization represent different facets of FGD system operations, including excursions, in terms of percentages. The calculations used to determine them are presented below:

1. $$\text{Operability} = \frac{\text{hours FGD operated}}{\text{hours boiler operated}} \times 100$$

2. $$\text{Reliability} = \frac{\text{hours FGD operated}}{\text{hours called on to operate}} \times 100$$

3. $$\text{Availability} = \frac{\text{hours FGD capable of operation}}{\text{hours in period}} \times 100$$

4. $$\text{Utilization} = \frac{\text{hours FGD operated}}{\text{hours in period}} \times 100$$

For data capture, only normal operations were considered, and FGD excursions were excluded. Operability as determined by this limitation is calculated as follows:

$$\text{Normal operability} = \text{operability} - \left[\frac{\text{(hours of excursions)}}{\text{(boiler hours)}} \times 100 \right]$$

Run no.	Date and time	SO_2			O_2		SO_2		
		RM	M	Diff	RM	M	RM	M	Diff
		ppm			%		mass/GCV		
1									
2									
3									
4									
5									
6									
7									
8									
9									
10									
11									
12									
Average									
Confidence Interval									
Accuracy									

RM - reference method result; M - monitoring system result; and mass/GVC - mass per gross caloric value, lb/10^6 Btu.

Average (A) $= \frac{\Sigma x}{n}$

95% Confidence Interval (CI_{95}) $= \frac{t_{0.975}}{\sqrt{n-1}} \sqrt{n\Sigma(x^2) - (\Sigma x)^2}$

Accuracy $= \frac{|A| + CI_{95}}{RV} \times 100$

where
x = individual result
n = number of data points
RV = average of reference method results
$t_{0.975}$ = t value as shown below

n^a	$t_{0.975}$	n^a	$t_{0.975}$	n^a	$t_{0.975}$
2	12.706	7	2.447	12	2.201
3	4.303	8	2.365	13	2.179
4	3.182	9	2.306	14	2.160
5	2.776	10	2.262	15	2.145
6	2.571	11	2.228	16	2.131

[a] Values are already corrected for n-1 degrees of freedom; use n equal to the number of individual values.

Figure 6-5. Sample data sheet and equations for determination of system relative accuracy.

6.3.2 CEM Operability Determinations

Inlet operability represents the capability of the CEM inlet sampling system to gather data. The determination includes data capture during periods of excursions and is calculated as follows:

$$\text{CEM inlet operability} = \frac{\text{(hours of inlet data)}}{\text{(hours FGD operated)}} \times 100$$

Outlet operability represents the capability of the CEM outlet sampling system to gather data. The determination does not consider FGD operation during excursions and is calculated as follows:

$$\text{CEM outlet operability} = \frac{\text{(hours of outlet data)}}{\text{(FGD hours - hours of excursions}} \times 100$$

6.4 QUALITY ASSURANCE

The QA procedures were designed to provide the most consistency with P/S procedures that was practicable. The system relative accuracy tests were performed in the same manner as in P/S testing.

Moisture determinations were performed in the same manner as during P/S testing and, because of the wet gas CEM analysis system, provided a vital data parameter for final data listings. The QA tests are described below.

6.4.1 System Relative Accuracy Tests

The system relative accuracy tests were performed by virtually the same test procedures outlined in Subsection 6.2.3.

6.4.2 Moisture Determinations

Manual Method 6 test moisture data gathered during P/S and QA testing provided the base for moisture determinations. Providing accurate values for use in correcting CEM data required assaying the mositure at the point of analysis; thus, removal of moisture between extraction from stack and analysis had to be accounted for. This was done according to the following equations:

$$\text{percent moisture} = \text{lowest of A or B} \qquad \text{(Eq. 6-3)}$$

where A = stack moisture, percent

B = dewpoint moisture, percent

$$\text{percent dewpoint moisture} = \frac{\text{partial pressure of } H_2O \text{ a+t}}{\text{pressure of system}} \times 100 \qquad \text{(Eq. 6-4)}$$

where t = lowest temperature of interface before analysis point

pressure of system = 25 in. Hg

Equations 6-3 and 6-4 had to be applied to each monitor as well as to each gas stream, because the monitor configuration resulted in different lowest-point temperatures in the O_2 and SO_2 sampling interfaces. In all cases the lowest calculated moisture value was reported. The lowest temperature of the O_2 monitor interface was room temperature (68°F) because unheated lines were used to transfer sample gas to the O_2 monitor. The lowest temperature of the SO_2 monitor interface was measured on

a daily basis at the mist knockout traps provided with the DuPont 460 system and generally exceeded 100°F. System pressure was assumed to be 25 in. Hg for determining partial pressure of moisture, based on 5 in. Hg vacuum and 30 in. Hg average atmospheric pressure.

6.5 DETERMINATION OF CEM OUTPUT IN THE FIELD

The values used to convert raw data to final output readings in terms of emission rates had to be determined in the field to provide data for performance specificaiton and QA. It was important that the field values be accurately determined and reflect the values transcribed for the final listings (Subsection 6.1) in order that field test data reflect the quality of the final data listings. The procedures used for reducing CEM data in the field are outlined below:

6.5.1 Reading of Raw Strip Charts

Scale deflection percentages were read from strip charts and used without conversion to parts per million of SO_2 or percentages of O_2 for system response and drift tests. For calibration error and system relative accuracy tests, conversion of scale deflections to parts per million of SO_2 and percentages of O_2 was necessary. The scale deflections (averages of three points for system relative accuracy) were multiplied by the appropriate span gas assay and divided by the last previous span gas reading to make this conversion, as indicated by the following equation:

$$\text{ppm } SO_2 \text{ or } \% \ O_2 = \text{reading, \% of scale} \times \frac{\text{assay of span gas}}{\text{span gas reading, \% of scale}} \qquad \text{(Eq. 6-5)}$$

6.5.2 Determination of Dry Concentrations

Dry SO_2 and O_2 concentrations had to be determined to correlate CEM and manual methods data during system relative accuracy tests. This was accomplished by multiplying raw data values by the factor 100/(100 - M), where M is the appropriate moisture content. The M value for inlet SO_2 and O_2, were determined as discussed in Subsection 6.4.2.

APPENDIX

1-HOUR DATA LISTINGS, AND DATA FREQUENCY DISTRIBUTIONS

DAILY SUMMARY OF RESULTS

LOCATION: RICKENBACKER AFB 1979
DATE: 1-22-79

TIME	LOAD	E IN	E OUT	EFF
0	#####	######	######	#####
100	#####	######	######	#####
200	#####	######	######	#####
300	#####	######	######	#####
400	#####	######	######	#####
500	#####	######	######	#####
600	#####	######	######	#####
700	0.	7.811	3.939	49.6
800	0.	8.015	3.748	53.2
900	0.	8.407	3.638	56.7
1000	0.	######	######	#####
1100	0.	######	######	#####
1200	0.	######	######	#####
1300	0.	######	######	#####
1400	0.	######	######	#####
1500	0.	######	######	#####
1600	0.	######	######	#####
1700	0.	######	######	#####
1800	0.	######	######	#####
1900	0.	######	######	#####
2000	0.	######	######	#####
2100	0.	######	######	#####
2200	0.	######	######	#####
2300	0.	######	######	#####
# AVERAGED	17.	3.	3.	3.
% OF DATA	71.	13.	13.	13.
MINIMUM	0.	7.811	3.638	49.576
MAXIMUM	0.	8.407	3.939	56.720
MEAN	#####	######	######	######
STD.DEV.	#####	######	######	######
% STD.DEV.	#####	######	######	######

24-HOUR REMOVAL EFICIENCY USING

$$\{MEAN\}_1^1 \quad E_{IN}, E_{OUT} \quad : \quad .000\%$$

NOTE: $\{MEAN\}_X^Y$ IS DEFINED AS:

THE MEAN FOR X DAYS USING Y-HOUR AVERAGES

DAILY SUMMARY OF RESULTS

LOCATION: RICKENBACKER AFB 1979
DATE: 1-23-79

TIME	LOAD	E IN	E OUT	EFF
0	0.	######	######	#####
100	0.	######	######	#####
200	0.	######	######	#####
300	0.	######	######	#####
400	0.	######	######	#####
500	0.	######	######	#####
600	0.	######	######	#####
700	0.	######	######	#####
800	0.	######	######	#####
900	0.	######	######	#####
1000	0.	######	######	#####
1100	0.	######	######	#####
1200	0.	######	######	#####
1300	0.	######	######	#####
1400	0.	######	######	#####
1500	0.	######	######	#####
1600	0.	7.364	######	#####
1700	0.	######	######	#####
1800	0.	6.977	######	#####
1900	0.	7.676	######	#####
2000	0.	7.398	######	#####
2100	0.	6.920	######	#####
2200	0.	7.237	######	#####
2300	0.	7.050	######	#####
# AVERAGES	24.	7.	0.	0.
% OF DATA	100.	29.	0.	0.
MINIMUM	0.	6.920	######	######
MAXIMUM	0.	7.676	.000	.000
MEAN	0.	######	######	######
STD.DEV.	0.	######	######	######
% STD.DEV.	#####	######	######	######

24-HOUR REMOVAL EFICIENCY USING

$\{MEAN\}_1^{E_{IN}, E_{OUT}}$: .000%

NOTE: $\{MEAN\}_X^Y$ IS DEFINED AS:

THE MEAN FOR X DAYS USING Y-HOUR AVERAGES

DAILY SUMMARY OF RESULTS

LOCATION: RICKENBACKER AFB 1979
DATE: 1-24-79

TIME	LOAD	E IN	E OUT	EFF
0	0.	7.026	######	#####
100	0.	7.213	######	#####
200	0.	6.392	######	#####
300	0.	6.118	######	#####
400	0.	6.044	######	#####
500	0.	6.203	######	#####
600	0.	6.692	######	#####
700	0.	6.272	######	#####
800	0.	7.443	######	#####
900	0.	8.642	######	#####
1000	0.	7.991	######	#####
1100	0.	7.329	######	#####
1200	0.	######	######	#####
1300	0.	######	######	#####
1400	0.	######	######	#####
1500	0.	######	######	#####
1600	0.	5.520	2.989	45.9
1700	0.	5.329	2.799	47.5
1800	0.	5.292	2.699	49.0
1900	0.	5.257	2.714	48.4
2000	0.	5.287	2.729	48.4
2100	0.	5.362	2.668	50.2
2200	0.	5.059	1.947	61.5
2300	0.	5.148	2.682	47.9
# AVERAGES	24.	20.	8.	8.
# OF DATA	100.	83.	33.	33.
MINIMUM	0.	5.059	1.947	45.857
MAXIMUM	0.	8.642	2.989	61.518
MEAN	0.	6.281	######	######
STD.DEV.	0.	1.045	######	######
% STD.DEV.	#####	16.643	######	######

24-HOUR REMOVAL EFICIENCY USING

$$(MEAN)_1 \; E_{IN} \, , \, E_{OUT} \; : \; ######\%$$

NOTE: $(MEAN)_X^Y$ IS DEFINED AS:

THE MEAN FOR X DAYS USING Y-HOUR AVERAGES

DAILY SUMMARY OF RESULTS

LOCATION: RICKENBACKER AFB 1979
DATE: 1-25-79

TIME	LOAD	E IN	E OUT	EFF
0	0.	5.227	2.766	47.1
100	0.	5.091	2.736	46.3
200	0.	5.263	2.416	54.1
300	0.	5.299	2.265	57.3
400	0.	5.750	2.518	56.2
500	0.	5.196	2.373	54.3
600	0.	5.291	2.428	54.1
700	0.	5.243	2.305	56.0
800	0.	5.374	2.549	52.6
900	0.	5.526	2.366	57.2
1000	0.	5.677	2.580	54.6
1100	0.	5.685	3.276	42.4
1200	0.	5.557	3.592	35.4
1300	0.	5.369	3.298	38.6
1400	0.	5.435	3.393	37.6
1500	0.	5.560	2.642	52.5
1600	0.	5.454	2.956	45.8
1700	0.	5.476	3.080	43.7
1800	0.	5.515	3.119	43.4
1900	0.	5.528	3.048	44.9
2000	0.	5.598	3.027	45.9
2100	0.	5.681	3.123	45.0
2200	0.	5.742	3.284	42.8
2300	0.	5.664	3.043	46.3
# AVERAGES	24.	24.	24.	24.
% OF DATA	100.	100.	100.	100.
MINIMUM	0.	5.091	2.265	35.366
MAXIMUM	0.	5.750	3.598	57.261
MEAN	0.	5.467	2.841	48.082
STD.DEV.	0.	.189	.392	6.558
% STD.DEV.	#####	3.451	13.802	13.640

24-HOUR REMOVAL EFICIENCY USING

$[MEAN]_1^1 \; E_{IN}, E_{OUT}$: 48.032%

NOTE: $[MEAN]_X^Y$ IS DEFINED AS:

THE MEAN FOR X DAYS USING Y-HOUR AVERAGES

DAILY SUMMARY OF RESULTS

LOCATION: RICKENBACKER AFB 1979
DATE: 1-26-79

TIME	LOAD	E IN	E OUT	EFF
0	0.	5.672	3.085	45.6
100	0.	5.645	2.851	49.5
200	0.	5.641	2.738	51.5
300	0.	5.620	2.774	50.6
400	0.	5.535	2.710	51.0
500	0.	5.493	2.507	54.4
600	0.	5.448	2.520	53.7
700	0.	5.670	2.478	56.3
800	0.	5.778	2.608	54.9
900	0.	6.069	2.607	57.0
1000	0.	######	######	#####
1100	0.	######	######	#####
1200	0.	7.025	2.870	59.1
1300	0.	6.859	2.905	57.7
1400	0.	6.935	2.829	59.2
1500	0.	6.785	2.705	60.1
1600	0.	6.783	2.755	59.4
1700	0.	6.810	2.775	59.2
1800	0.	6.725	2.455	63.5
1900	0.	6.928	2.634	62.0
2000	0.	6.604	2.611	60.5
2100	0.	6.729	2.700	59.9
2200	0.	6.618	2.688	59.4
2300	0.	6.639	2.557	61.5
# AVERAGES	24.	22.	22.	22.
% OF DATA	100.	92.	92.	92.
MINIMUM	0.	5.448	2.455	45.609
MAXIMUM	0.	7.025	3.085	63.498
MEAN	0.	6.273	2.698	56.636
STD.DEV.	0.	.595	.155	4.661
% STD.DEV.	#####	9.479	5.737	8.230

24-HOUR REMOVAL EFICIENCY USING

$\{MEAN\}_{E_{IN}, E_{OUT}}$: 56.987%

NOTE: $\{MEAN\}^{Y}_{X}$ IS DEFINED AS:

THE MEAN FOR X DAYS USING Y-HOUR AVERAGES

DAILY SUMMARY OF RESULTS

LOCATION: RICKENBACKER AFB 1979
DATE: 1-27-79

TIME	LOAD	E IN	E OUT	EFF
0	0.	6.988	2.576	63.1
100	0.	6.901	2.153	68.8
200	0.	6.938	2.072	70.1
300	0.	6.923	2.097	69.7
400	0.	7.263	1.680	76.9
500	0.	7.082	1.312	81.5
600	0.	6.855	1.224	82.1
700	0.	6.914	1.275	81.6
800	0.	7.168	1.463	79.6
900	0.	6.987	1.325	81.0
1000	0.	6.945	2.217	68.1
1100	0.	6.951	1.933	72.2
1200	0.	6.643	2.030	69.4
1300	0.	6.836	2.319	66.1
1400	0.	######	######	#####
1500	0.	######	######	#####
1600	0.	######	######	#####
1700	0.	5.514	2.124	61.5
1800	0.	5.592	2.098	62.5
1900	0.	5.794	1.965	66.1
2000	0.	5.535	2.070	62.6
2100	0.	5.493	1.796	67.3
2200	0.	5.461	1.815	66.8
2300	0.	5.400	1.871	65.4
# AVERAGES	24.	21.	21.	21.
% OF DATA	100.	88.	88.	88.
MINIMUM	0.	5.400	1.224	61.470
MAXIMUM	0.	7.263	2.576	82.138
MEAN	0.	6.485	1.877	70.587
STD.DEV.	0.	.698	.373	6.991
% STD.DEV.	#####	10.756	19.849	9.904

24-HOUR REMOVAL EFICIENCY USING

$[MEAN]_1^{E_{IN}, E_{OUT}}$: 71.058%

NOTE: $[MEAN]_X^Y$ IS DEFINED AS:

THE MEAN FOR X DAYS USING Y-HOUR AVERAGES

DAILY SUMMARY OF RESULTS

LOCATION: RICKENBACKER AFB 1979
DATE: 1-28-79

TIME	LOAD	E IN	E OUT	EFF
0	0.	5.298	1.733	67.3
100	0.	5.271	1.628	69.1
200	0.	5.208	1.626	68.8
300	0.	5.129	1.623	68.4
400	0.	5.388	1.554	71.2
500	0.	5.434	1.535	71.8
600	0.	6.572	1.695	74.2
700	0.	6.363	1.689	73.5
800	0.	6.164	1.557	74.7
900	0.	5.861	1.758	70.0
1000	0.	5.853	1.915	67.3
1100	0.	6.051	1.851	69.4
1200	0.	6.004	1.841	69.3
1300	0.	5.901	1.779	69.9
1400	0.	6.334	1.860	70.6
1500	0.	6.353	2.332	63.3
1600	0.	6.536	2.419	63.0
1700	0.	6.360	2.376	62.6
1800	0.	6.418	2.474	61.4
1900	0.	6.404	2.571	59.9
2000	0.	6.320	2.330	63.1
2100	0.	6.378	2.334	63.4
2200	0.	6.445	2.211	65.7
2300	0.	6.344	2.300	63.7
# AVERAGES	24.	24.	24.	24.
% OF DATA	100.	100.	100.	100.
MINIMUM	0.	5.129	1.535	59.860
MAXIMUM	0.	6.572	2.571	74.732
MEAN	0.	6.016	1.958	67.565
STD.DEV.	0.	.475	.347	4.210
% STD.DEV.	#####	7.895	17.706	6.231

24-HOUR REMOVAL EFICIENCY USING

$\{MEAN\}_{1}^{1}$ E , E : 67.454%
IN OUT

NOTE: $\{MEAN\}_{X}^{Y}$ IS DEFINED AS:

THE MEAN FOR X DAYS USING Y-HOUR AVERAGES

DAILY SUMMARY OF RESULTS

LOCATION: RICKENBACKER AFB 1979
DATE: 1-29-79

TIME	LOAD	E IN	E OUT	EFF
0	0.	6.499	2.470	62.0
100	0.	6.390	2.511	60.7
200	0.	6.330	2.483	60.8
300	0.	6.406	2.356	63.2
400	0.	6.396	2.274	64.4
500	0.	6.297	2.206	65.0
600	0.	6.431	2.258	64.9
700	0.	6.637	2.351	64.6
800	0.	6.519	2.242	65.6
900	0.	6.570	2.018	69.3
1000	0.	######	######	#####
1100	0.	5.965	2.409	59.6
1200	0.	6.023	2.366	60.7
1300	0.	5.901	2.558	56.7
1400	0.	5.800	2.550	56.0
1500	0.	5.976	2.453	59.0
1600	0.	5.931	2.467	58.4
1700	0.	5.923	2.271	61.7
1800	0.	6.041	2.441	59.6
1900	0.	6.062	2.561	57.7
2000	0.	5.998	2.739	54.3
2100	0.	6.055	2.849	52.9
2200	0.	6.146	3.029	50.7
2300	0.	6.329	2.784	56.0
# AVERAGES	24.	23.	23.	23.
% OF DATA	100.	96.	96.	96.
MINIMUM	0.	5.800	2.018	50.707
MAXIMUM	0.	6.637	3.029	69.280
MEAN	0.	6.201	2.463	60.168
STD.DEV.	0.	.250	.228	4.497
% STD.DEV.	#####	4.033	9.252	7.475

24-HOUR REMOVAL EFICIENCY USING

$[MEAN]_{IN}^{E}, E_{OUT}$: 60.284%

NOTE: $[MEAN]_{X}^{Y}$ IS DEFINED AS:

THE MEAN FOR X DAYS USING Y-HOUR AVERAGES

DAILY SUMMARY OF RESULTS

LOCATION: RICKENBACKER AFB 1979
DATE: 1-30-79

TIME	LOAD	E IN	E OUT	EFF
0	0.	6.231	2.968	52.4
100	0.	6.167	2.904	52.9
200	0.	5.969	2.775	53.5
300	0.	5.908	2.672	54.8
400	0.	5.696	2.573	54.8
500	0.	5.496	2.469	55.1
600	0.	5.600	2.322	58.5
700	0.	6.110	2.656	56.5
800	0.	5.933	2.880	51.5
900	0.	6.611	2.704	59.1
1000	0.	6.373	2.862	55.1
1100	0.	6.490	2.846	56.2
1200	0.	6.367	2.619	58.9
1300	0.	6.073	2.745	54.8
1400	0.	6.248	2.559	59.0
1500	0.	6.344	2.639	58.4
1600	0.	6.172	2.535	58.9
1700	0.	6.147	2.591	57.9
1800	0.	6.247	2.348	62.4
1900	0.	6.300	2.684	57.4
2000	0.	6.266	2.476	60.5
2100	0.	6.329	2.543	59.8
2200	0.	6.367	2.596	59.2
2300	0.	6.350	2.439	61.6
# AVERAGES	24.	24.	24.	24.
% OF DATA	100.	100.	100.	100.
MINIMUM	0.	5.496	2.322	51.451
MAXIMUM	0.	6.611	2.968	62.405
MEAN	0.	6.158	2.642	57.050
STD.DEV.	0.	.274	.172	2.950
% STD.DEV.	#####	4.448	6.516	5.171

24-HOUR REMOVAL EFICIENCY USING

$(MEAN)_1^1$ E_{IN} , E_{OUT} : 57.101%

NOTE: $(MEAN)_X^Y$ IS DEFINED AS:

THE MEAN FOR X DAYS USING Y-HOUR AVERAGES

DAILY SUMMARY OF RESULTS

LOCATION: RICKENBACKER AFB 1979
DATE: 1-31-79

TIME	LOAD	E IN	E OUT	EFF
0	0.	6.235	2.660	57.3
100	0.	6.258	2.625	58.1
200	0.	6.277	2.677	57.4
300	0.	6.113	2.606	57.4
400	0.	5.981	2.433	59.3
500	0.	6.194	2.436	60.7
600	0.	6.063	2.249	62.9
700	0.	6.294	2.716	56.8
800	0.	6.170	2.693	56.3
900	0.	6.321	2.765	56.3
1000	0.	6.225	2.831	54.5
1100	0.	6.143	2.757	55.1
1200	0.	6.230	2.718	56.4
1300	0.	6.101	2.531	58.5
1400	0.	6.088	2.300	62.2
1500	0.	6.351	2.646	58.3
1600	0.	6.293	3.227	48.7
1700	0.	6.277	2.565	59.1
1800	0.	6.364	2.858	55.1
1900	0.	6.338	2.734	56.9
2000	0.	6.339	2.683	57.7
2100	0.	6.304	2.901	54.0
2200	0.	6.343	3.038	52.1
2300	0.	6.159	2.822	54.2
# AVERAGES	24.	24.	24.	24.
% OF DATA	100.	100.	100.	100.
MINIMUM	0.	5.981	2.249	48.709
MAXIMUM	0.	6.364	3.227	62.902
MEAN	0.	6.228	2.686	56.887
STD.DEV.	0.	.105	.215	3.062
% STD.DEV.	#####	1.686	8.010	5.383

24-HOUR REMOVAL EFICIENCY USING

$[MEAN]^{1}_{1}$ E_{IN} , E_{OUT} : 56.863%

NOTE: $[MEAN]^{Y}_{X}$ IS DEFINED AS:

THE MEAN FOR X DAYS USING Y-HOUR AVERAGES

DAILY SUMMARY OF RESULTS

LOCATION: RICKENBACKER AFB 1979
DATE: 2- 1-79

TIME	LOAD	E IN	E OUT	EFF
0	0.	6.139	3.001	51.1
100	0.	6.135	2.748	55.2
200	0.	6.350	2.961	53.4
300	0.	6.153	3.200	48.0
400	0.	6.261	3.219	48.6
500	0.	6.348	3.128	50.7
600	0.	6.020	3.174	47.3
700	0.	6.279	3.345	46.7
800	0.	6.329	3.427	45.8
900	0.	6.374	3.317	48.0
1000	0.	6.336	3.241	48.9
1100	0.	6.215	3.177	48.9
1200	0.	6.261	3.004	52.0
1300	0.	6.475	3.215	50.3
1400	0.	6.494	3.142	51.6
1500	0.	6.940	3.434	50.5
1600	0.	######	######	#####
1700	0.	######	######	#####
1800	0.	######	######	#####
1900	0.	######	######	#####
2000	0.	5.879	3.184	45.8
2100	0.	6.215	3.140	49.5
2200	0.	6.456	3.529	45.3
2300	0.	6.299	3.676	41.6
# AVERAGES	24.	20.	20.	20.
% OF DATA	100.	83.	83.	83.
MINIMUM	0.	5.879	2.748	41.646
MAXIMUM	0.	6.940	3.676	55.204
MEAN	0.	6.298	3.213	48.969
STD.DEV.	0.	.213	.209	3.106
% STD.DEV.	#####	3.385	6.496	6.343

24-HOUR REMOVAL EFICIENCY USING

$[MEAN]_1^1$ E_{IN} , E_{OUT} : 48.983%

NOTE: $[MEAN]_X^Y$ IS DEFINED AS:

THE MEAN FOR X DAYS USING Y-HOUR AVERAGES

A-7

DAILY SUMMARY OF RESULTS

LOCATION: RICKENBACKER AFB 1979
DATE: 2- 2-79

TIME	LOAD	E IN	E OUT	EFF
0	0.	6.273	4.113	34.4
100	0.	6.296	4.149	34.1
200	0.	6.390	4.209	34.1
300	0.	6.359	4.059	36.2
400	0.	6.307	4.240	32.8
500	0.	6.395	3.653	42.9
600	0.	6.252	4.366	30.2
700	0.	6.485	4.714	27.3
800	0.	6.483	4.168	35.7
900	0.	6.265	2.847	54.6
1000	0.	6.231	2.876	53.8
1100	0.	6.138	2.832	53.9
1200	0.	6.054	2.759	54.4
1300	0.	5.973	2.941	50.8
1400	0.	6.039	2.671	55.8
1500	0.	6.068	2.999	50.6
1600	0.	6.183	2.760	55.4
1700	0.	6.198	2.861	53.8
1800	0.	6.249	2.863	54.2
1900	0.	6.203	3.080	50.3
2000	0.	6.242	2.902	53.5
2100	0.	6.337	3.025	52.3
2200	0.	6.339	2.816	55.6
2300	0.	6.315	3.140	50.3
# AVERAGES	24.	24.	24.	24.
% OF DATA	100.	100.	100.	100.
MINIMUM	0.	5.973	2.671	27.306
MAXIMUM	0.	6.485	4.714	55.781
MEAN	0.	6.253	3.377	46.117
STD.DEV.	0.	.132	.668	9.891
% STD.DEV.	#####	2.114	19.785	21.448

24-HOUR REMOVAL EFICIENCY USING

$[MEAN]_{1}^{1}$ E_{IN} , E_{OUT} : 45.997%

NOTE: $[MEAN]_{X}^{Y}$ IS DEFINED AS:

THE MEAN FOR X DAYS USING Y-HOUR AVERAGES

DAILY SUMMARY OF RESULTS

LOCATION: RICKENBACKER AFB 1979
DATE: 2- 3-79

TIME	LOAD	E IN	E OUT	EFF
0	0.	6.277	2.927	53.4
100	0.	6.336	2.766	56.3
200	0.	6.237	2.707	56.6
300	0.	6.271	2.158	65.6
400	0.	6.206	2.816	54.6
500	0.	6.122	3.167	48.3
600	0.	6.081	3.259	46.4
700	0.	6.234	3.232	48.1
800	0.	6.329	3.316	47.6
900	0.	6.317	3.409	46.0
1000	0.	6.331	3.138	50.4
1100	0.	6.281	3.233	48.5
1200	0.	6.285	2.881	54.2
1300	0.	6.241	2.836	54.6
1400	0.	6.331	2.930	53.7
1500	0.	6.345	2.853	55.0
1600	0.	6.074	2.934	51.7
1700	0.	######	######	#####
1800	0.	6.708	3.125	53.4
1900	0.	######	2.828	#####
2000	0.	######	2.415	#####
2100	0.	######	2.773	#####
2200	0.	######	2.772	#####
2300	0.	######	2.947	#####
# AVERAGES	24.	18.	23.	18.
% OF DATA	100.	75.	96.	75.
MINIMUM	0.	6.074	2.158	46.043
MAXIMUM	0.	6.708	3.409	65.581
MEAN	0.	6.278	2.931	52.474
STD.DEV.	0.	.137	.289	4.753
% STD.DEV.	#####	2.176	9.853	9.059

24-HOUR REMOVAL EFICIENCY USING

$(MEAN)_1^{E_{IN}, E_{OUT}}$: 53.308%

NOTE: $(MEAN)_X^Y$ IS DEFINED AS:

THE MEAN FOR X DAYS USING Y-HOUR AVERAGES

DAILY SUMMARY OF RESULTS

LOCATION: RICKENBACKER AFB 1979
DATE: 2- 4-79

TIME	LOAD	E IN	E OUT	EFF
0	0.	######	3.022	#####
100	0.	6.082	3.151	48.2
200	0.	6.137	3.126	49.1
300	0.	6.161	3.339	45.8
400	0.	6.206	3.362	45.8
500	0.	6.430	3.351	47.9
600	0.	6.396	3.238	49.4
700	0.	6.377	3.305	48.2
800	0.	6.429	3.339	48.1
900	0.	6.300	3.283	47.9
1000	0.	6.377	3.180	50.1
1100	0.	6.141	3.228	47.4
1200	0.	6.087	3.281	46.1
1300	0.	6.079	3.238	46.7
1400	0.	6.300	3.221	48.9
1500	0.	6.295	3.184	49.4
1600	0.	6.473	3.307	48.9
1700	0.	6.484	3.103	52.1
1800	0.	6.630	3.696	44.3
1900	0.	6.633	3.653	44.9
2000	0.	6.667	3.715	44.3
2100	0.	6.860	3.654	46.7
2200	0.	6.847	3.656	46.6
2300	0.	6.788	3.627	46.6
# AVERAGES	24.	23.	24.	23.
% OF DATA	100.	96.	100.	96.
MINIMUM	0.	6.079	3.022	44.252
MAXIMUM	0.	6.860	3.715	52.143
MEAN	0.	6.399	3.344	47.537
STD.DEV.	0.	.245	.208	1.927
% STD.DEV.	#####	3.830	6.210	4.053

24-HOUR REMOVAL EFICIENCY USING

$[MEAN]_1^1$ E_{IN} , E_{OUT} : 47.739%

NOTE: $[MEAN]_X^Y$ IS DEFINED AS:

THE MEAN FOR X DAYS USING Y-HOUR AVERAGES

DAILY SUMMARY OF RESULTS

LOCATION: RICKENBACKER AFB 1979
DATE: 2- 5-79

TIME	LOAD	E IN	E OUT	EFF
0	0.	7.091	3.675	48.2
100	0.	6.820	3.339	51.0
200	0.	6.637	3.299	50.3
300	0.	6.754	3.373	50.1
400	0.	6.851	3.461	49.5
500	0.	6.941	3.493	49.7
600	0.	6.982	3.735	46.5
700	0.	7.174	4.004	44.2
800	0.	7.410	4.120	44.4
900	0.	7.736	4.474	42.2
1000	0.	7.915	4.530	42.8
1100	0.	8.141	4.838	40.6
1200	0.	6.848	3.573	47.8
1300	0.	6.970	3.099	55.5
1400	0.	6.658	3.168	52.4
1500	0.	6.710	3.255	51.5
1600	0.	6.686	3.251	51.4
1700	0.	6.561	3.414	48.0
1800	0.	6.382	3.303	48.3
1900	0.	6.565	3.265	50.3
2000	0.	6.994	3.208	54.1
2100	0.	6.558	3.187	51.4
2200	0.	6.518	3.238	50.3
2300	0.	6.448	3.148	51.2
# AVERAGES	24.	24.	24.	24.
% OF DATA	100.	100.	100.	100.
MINIMUM	0.	6.382	3.099	40.567
MAXIMUM	0.	8.141	4.838	55.536
MEAN	0.	6.931	3.560	48.812
STD.DEV.	0.	.459	.484	3.753
% STD.DEV.	#####	6.621	13.603	7.689

24-HOUR REMOVAL EFICIENCY USING

$$[\text{MEAN}]_1 \; E_{IN}, E_{OUT} : 48.632\%$$

NOTE: $[\text{MEAN}]^{Y}_{X}$ IS DEFINED AS:

THE MEAN FOR X DAYS USING Y-HOUR AVERAGES

DAILY SUMMARY OF RESULTS

LOCATION: RICKENBACKER AFB 1979
DATE: 2- 6-79

TIME	LOAD	E IN	E OUT	EFF
0	0.	6.561	3.215	51.0
100	0.	6.914	3.552	48.6
200	0.	7.052	3.725	47.2
300	0.	7.137	3.916	45.1
400	0.	7.426	3.859	48.0
500	0.	7.652	4.247	44.5
600	0.	6.655	3.163	52.5
700	0.	7.489	3.375	54.9
800	0.	6.922	3.007	56.6
900	0.	6.861	2.600	62.1
1000	0.	6.312	2.731	56.7
1100	0.	6.389	3.028	52.6
1200	0.	6.286	3.615	42.5
1300	0.	6.264	3.165	49.5
1400	0.	6.303	2.669	57.7
1500	0.	6.381	2.846	55.4
1600	0.	6.052	2.731	54.9
1700	0.	6.007	2.725	54.6
1800	0.	6.379	2.706	57.6
1900	0.	6.783	3.044	55.1
2000	0.	6.910	2.707	60.8
2100	0.	7.116	2.717	61.8
2200	0.	7.451	2.816	62.2
2300	0.	7.658	2.755	64.0
# AVERAGES	24.	24.	24.	24.
% OF DATA	100.	100.	100.	100.
MINIMUM	0.	6.007	2.600	42.500
MAXIMUM	0.	7.658	4.247	64.021
MEAN	0.	6.790	3.121	54.000
STD.DEV.	0.	.506	.470	6.017
% STD.DEV.	#####	7.456	15.071	11.142

24-HOUR REMOVAL EFICIENCY USING

$[MEAN]_1^{E_{IN}, E_{OUT}}$: 54.030%

NOTE: $[MEAN]_X^Y$ IS DEFINED AS:

THE MEAN FOR X DAYS USING Y-HOUR AVERAGES

DAILY SUMMARY OF RESULTS

LOCATION: RICKENBACKER AFB 1979
DATE: 2- 7-79

TIME	LOAD	E IN	E OUT	EFF
0	0.	6.047	2.578	57.4
100	0.	5.820	2.649	54.5
200	0.	6.042	2.868	52.5
300	0.	6.176	2.882	53.3
400	0.	6.499	2.832	56.4
500	0.	6.420	2.999	53.3
600	0.	6.629	2.671	59.7
700	0.	6.882	2.943	57.2
800	0.	6.910	3.065	55.6
900	0.	7.332	2.915	60.2
1000	0.	7.300	2.950	59.6
1100	0.	6.023	2.340	61.1
1200	0.	6.783	2.719	59.9
1300	0.	######	######	#####
1400	0.	6.473	2.346	63.8
1500	0.	6.551	2.312	64.7
1600	0.	6.574	2.601	60.4
1700	0.	6.351	2.765	56.5
1800	0.	6.134	2.759	55.0
1900	0.	5.967	2.886	51.6
2000	0.	5.972	2.835	52.5
2100	0.	5.921	2.785	53.0
2200	0.	6.008	2.506	58.3
2300	0.	5.732	2.329	59.4
# AVERAGES	24.	23.	23.	23.
% OF DATA	100.	96.	96.	96.
MINIMUM	0.	5.732	2.312	51.631
MAXIMUM	0.	7.332	3.065	64.712
MEAN	0.	6.372	2.719	57.221
STD.DEV.	0.	.451	.227	3.682
% STD.DEV.	#####	7.078	8.364	6.434

24-HOUR REMOVAL EFICIENCY USING

$[MEAN]_1$ E_{IN} , E_{OUT} : 57.327%

NOTE: $[MEAN]_X^Y$ IS DEFINED AS:

THE MEAN FOR X DAYS USING Y-HOUR AVERAGES

DAILY SUMMARY OF RESULTS

LOCATION: RICKENBACKER AFB 1979
DATE: 2- 8-79

TIME	LOAD	E IN	E OUT	EFF
0	0.	5.569	2.394	57.0
100	0.	5.593	2.066	63.1
200	0.	5.501	2.127	61.3
300	0.	5.820	2.346	59.7
400	0.	5.605	2.511	55.2
500	0.	5.604	2.496	55.5
600	0.	5.715	2.699	52.8
700	0.	5.710	2.626	54.0
800	0.	5.603	2.418	56.8
900	0.	5.421	3.054	43.7
1000	0.	5.418	3.016	44.3
1100	0.	5.444	3.147	42.2
1200	0.	6.026	3.329	44.8
1300	0.	6.069	3.419	43.7
1400	0.	6.321	3.257	48.5
1500	0.	6.189	3.191	48.4
1600	0.	6.154	2.829	54.0
1700	0.	6.058	2.672	55.9
1800	0.	6.049	2.350	61.2
1900	0.	6.438	2.836	55.9
2000	0.	6.751	2.905	57.0
2100	0.	6.257	2.657	57.5
2200	0.	6.279	2.700	57.0
2300	0.	6.394	2.711	57.6
# AVERAGES	24.	24.	24.	24.
% OF DATA	100.	100.	100.	100.
MINIMUM	0.	5.418	2.066	42.201
MAXIMUM	0.	6.751	3.419	63.059
MEAN	0.	5.916	2.748	53.630
STD.DEV.	0.	.379	.371	6.187
% STD.DEV.	#####	6.412	13.526	11.537

24-HOUR REMOVAL EFICIENCY USING

$[MEAN]_{IN}^{E}$, E_{OUT} : 53.692%

NOTE: $[MEAN]_{X}^{Y}$ IS DEFINED AS:

THE MEAN FOR X DAYS USING Y-HOUR AVERAGES

DAILY SUMMARY OF RESULTS

LOCATION: RICKENBACKER AFB 1979
DATE: 2- 9-79

TIME	LOAD	E IN	E OUT	EFF
0	0.	6.277	2.677	57.3
100	0.	6.423	2.685	58.2
200	0.	6.387	2.760	56.8
300	0.	6.270	2.673	57.4
400	0.	6.229	2.616	58.0
500	0.	6.108	2.774	54.6
600	0.	6.353	2.588	59.3
700	0.	6.297	2.834	55.0
800	0.	6.347	3.009	52.6
900	0.	6.335	2.893	54.3
1000	0.	6.349	2.918	54.0
1100	0.	6.341	2.828	55.4
1200	0.	6.353	2.823	55.6
1300	0.	6.588	2.774	57.9
1400	0.	6.847	2.541	62.9
1500	0.	6.409	2.370	63.0
1600	0.	6.358	2.142	66.3
1700	0.	6.040	2.115	65.0
1800	0.	6.322	2.514	60.2
1900	0.	6.452	2.627	59.3
2000	0.	6.533	2.579	60.5
2100	0.	6.887	2.778	59.7
2200	0.	6.940	3.590	48.3
2300	0.	6.602	2.953	55.3
# AVERAGES	24.	24.	24.	24.
% OF DATA	100.	100.	100.	100.
MINIMUM	0.	6.040	2.115	48.273
MAXIMUM	0.	6.940	3.590	66.317
MEAN	0.	6.419	2.711	57.784
STD.DEV.	0.	.222	.293	4.062
% STD.DEV.	#####	3.454	10.790	7.030

24-HOUR REMOVAL EFICIENCY USING

$[MEAN]_1^1 \; E_{IN}, E_{OUT}$: 57.765%

NOTE: $[MEAN]_X^Y$ IS DEFINED AS:

THE MEAN FOR X DAYS USING Y-HOUR AVERAGES

DAILY SUMMARY OF RESULTS

LOCATION: RICKENBACKER AFB 1979
DATE: 2-10-79

TIME	LOAD	E IN	E OUT	EFF
0	0.	6.147	3.226	47.5
100	0.	6.303	3.104	50.8
200	0.	6.244	3.341	46.5
300	0.	6.279	3.224	48.7
400	0.	6.339	3.268	48.4
500	0.	7.037	3.234	54.0
600	0.	6.762	3.215	52.5
700	0.	6.587	3.333	49.4
800	0.	6.692	3.456	48.4
900	0.	6.639	4.687	29.4
1000	0.	6.801	5.014	26.3
1100	0.	6.674	3.408	48.9
1200	0.	6.320	2.932	53.6
1300	0.	6.466	3.033	53.1
1400	0.	6.160	3.015	51.1
1500	0.	5.894	2.723	53.8
1600	0.	5.724	2.653	53.7
1700	0.	5.722	2.744	52.1
1800	0.	5.908	2.365	60.0
1900	0.	6.187	2.404	61.1
2000	0.	6.295	2.585	58.9
2100	0.	6.435	2.429	62.3
2200	0.	6.402	2.447	61.8
2300	0.	6.199	2.441	60.6
# AVERAGES	24.	24.	24.	24.
% OF DATA	100.	100.	100.	100.
MINIMUM	0.	5.722	2.365	26.270
MAXIMUM	0.	7.037	5.014	62.252
MEAN	0.	6.342	3.095	51.364
STD.DEV.	0.	.334	.650	8.731
% STD.DEV.	#####	5.268	21.000	16.999

24-HOUR REMOVAL EFICIENCY USING

$$[\text{MEAN}]_{1}^{1} \; E_{IN}, E_{OUT} : 51.202\%$$

NOTE: $[\text{MEAN}]_{X}^{Y}$ IS DEFINED AS:

THE MEAN FOR X DAYS USING Y-HOUR AVERAGES

DAILY SUMMARY OF RESULTS

LOCATION: RICKENBACKER AFB 1979
DATE: 2-11-79

TIME	LOAD	E IN	E OUT	EFF
0	0.	5.651	2.458	56.5
100	0.	5.885	2.144	63.6
200	0.	6.146	2.201	64.2
300	0.	5.914	2.268	61.7
400	0.	5.708	2.045	64.2
500	0.	5.679	2.176	61.7
600	0.	5.583	2.157	61.4
700	0.	5.907	2.125	64.0
800	0.	5.745	2.340	59.3
900	0.	5.743	2.507	56.3
1000	0.	5.816	2.671	54.1
1100	0.	5.696	2.602	54.3
1200	0.	5.649	2.454	56.6
1300	0.	5.727	2.544	55.6
1400	0.	5.995	2.662	55.6
1500	0.	5.947	2.732	54.1
1600	0.	5.879	2.730	53.6
1700	0.	5.778	######	#####
1800	0.	5.704	######	#####
1900	0.	5.828	######	#####
2000	0.	5.779	######	#####
2100	0.	5.694	######	#####
2200	0.	5.621	######	#####
2300	0.	5.665	######	#####
# AVERAGES	24.	24.	17.	17.
% OF DATA	100.	100.	71.	71.
MINIMUM	0.	5.583	2.045	53.562
MAXIMUM	0.	6.146	2.732	64.181
MEAN	0.	5.781	######	######
STD.DEV.	0.	.139	######	######
% STD.DEV.	#####	2.335	######	######

24-HOUR REMOVAL EFICIENCY USING

$[MEAN]^{1}$ E_{IN} , E_{OUT} : ######%

NOTE: $[MEAN]^{Y}_{X}$ IS DEFINED AS:

THE MEAN FOR X DAYS USING Y-HOUR AVERAGES

DAILY SUMMARY OF RESULTS

LOCATION: RICKENBACKER AFB 1979
DATE: 2-12-79

TIME	LOAD	E IN	E OUT	EFF
0	0.	5.686	######	#####
100	0.	5.544	######	#####
200	0.	5.533	######	#####
300	0.	5.520	######	#####
400	0.	5.441	######	#####
500	0.	5.698	######	#####
600	0.	5.808	######	#####
700	0.	5.719	######	#####
800	0.	5.652	######	#####
900	0.	5.653	######	#####
1000	0.	5.746	######	#####
1100	0.	6.031	3.340	44.6
1200	0.	5.837	3.198	45.2
1300	0.	6.102	3.053	50.0
1400	0.	6.077	3.107	48.9
1500	0.	6.066	2.819	53.5
1600	0.	5.842	2.615	55.2
1700	0.	5.587	2.668	52.2
1800	0.	5.642	2.595	54.0
1900	0.	5.864	2.507	57.3
2000	0.	6.022	2.684	55.4
2100	0.	6.175	2.682	56.6
2200	0.	6.260	2.418	61.4
2300	0.	6.234	2.393	61.6
# AVERAGES	24.	24.	13.	13.
% OF DATA	100.	100.	54.	54.
MINIMUM	0.	5.441	2.393	44.611
MAXIMUM	0.	6.260	3.340	61.617
MEAN	0.	5.822	######	######
STD.DEV.	0.	.244	######	######
% STD.DEV.	#####	4.190	######	######

24-HOUR REMOVAL EFICIENCY USING

$[MEAN]_1$ E_{IN} , E_{OUT} : ######%

NOTE: $[MEAN]^Y_X$ IS DEFINED AS:

THE MEAN FOR X DAYS USING Y-HOUR AVERAGES

DAILY SUMMARY OF RESULTS

LOCATION: RICKENBACKER AFB 1979
DATE: 2-13-79

TIME	LOAD	E IN	E OUT	EFF
0	0.	6.138	2.421	60.6
100	0.	6.208	2.252	63.7
200	0.	6.109	2.129	65.1
300	0.	6.276	2.091	66.7
400	0.	6.190	2.250	63.6
500	0.	6.259	2.180	65.2
600	0.	6.477	2.294	64.6
700	0.	6.640	2.250	66.1
800	0.	6.372	2.241	64.8
900	0.	6.337	2.294	63.8
1000	0.	######	######	#####
1100	0.	######	######	#####
1200	0.	######	######	#####
1300	0.	######	######	#####
1400	0.	######	######	#####
1500	0.	######	######	#####
1600	0.	######	######	#####
1700	0.	######	######	#####
1800	0.	######	######	#####
1900	0.	######	######	#####
2000	0.	######	######	#####
2100	0.	######	######	#####
2200	0.	######	######	#####
2300	0.	######	######	#####
# AVERAGES	24.	10.	10.	10.
% OF DATA	100.	42.	42.	42.
MINIMUM	0.	6.109	2.091	60.560
MAXIMUM	0.	6.640	2.421	66.675
MEAN	0.	######	######	######
STD.DEV.	0.	######	######	######
% STD.DEV.	#####	######	######	######

24-HOUR REMOVAL EFICIENCY USING

$[MEAN]_{1}$ E_{IN} , E_{OUT} : .000%

NOTE: $[MEAN]^{Y}_{X}$ IS DEFINED AS:

THE MEAN FOR X DAYS USING Y-HOUR AVERAGES

DAILY SUMMARY OF RESULTS

LOCATION: RICKENBACKER AFB 1979
DATE: 2-14-79

TIME	LOAD	E IN	E OUT	EFF
0	0.	######	######	#####
100	0.	######	######	#####
200	0.	######	######	#####
300	0.	######	######	#####
400	0.	######	######	#####
500	0.	######	######	#####
600	0.	######	######	#####
700	0.	######	######	#####
800	0.	######	######	#####
900	0.	######	######	#####
1000	0.	######	######	#####
1100	0.	5.613	2.706	51.8
1200	0.	6.519	3.271	49.8
1300	0.	6.812	2.636	61.3
1400	0.	7.255	2.411	66.8
1500	0.	7.371	2.236	69.7
1600	0.	7.128	2.295	67.8
1700	0.	7.854	2.089	73.4
1800	0.	6.002	2.095	65.1
1900	0.	8.916	1.762	80.2
2000	0.	9.939	1.475	85.2
2100	0.	6.598	1.830	72.3
2200	0.	6.757	1.896	71.9
2300	0.	7.008	1.969	71.9
# AVERAGES	24.	13.	13.	13.
% OF DATA	100.	54.	54.	54.
MINIMUM	0.	5.613	1.475	49.827
MAXIMUM	0.	9.939	3.271	85.163
MEAN	0.	######	######	######
STD.DEV.	0.	######	######	######
% STD.DEV.	#####	######	######	######

24-HOUR REMOVAL EFICIENCY USING

$[MEAN]^{1}$ E_{IN} , E_{OUT} : .000%

NOTE: $[MEAN]^{Y}_{X}$ IS DEFINED AS:

THE MEAN FOR X DAYS USING Y-HOUR AVERAGES

DAILY SUMMARY OF RESULTS

LOCATION: RICKENBACKER AFB 1979
DATE: 2-15-79

TIME	LOAD	E IN	E OUT	EFF
0	0.	7.410	1.941	73.8
100	0.	7.309	2.038	72.1
200	0.	7.211	2.211	69.3
300	0.	7.380	1.845	75.0
400	0.	7.236	2.082	71.2
500	0.	7.657	2.706	64.7
600	0.	7.796	2.509	67.8
700	0.	7.632	2.500	67.3
800	0.	######	######	#####
900	0.	######	######	#####
1000	0.	######	######	#####
1100	0.	######	######	#####
1200	0.	######	######	#####
1300	0.	######	######	#####
1400	0.	######	######	#####
1500	0.	######	######	#####
1600	0.	######	######	#####
1700	0.	######	######	#####
1800	0.	######	######	#####
1900	0.	######	######	#####
2000	0.	7.374	2.360	68.0
2100	0.	7.580	2.540	66.5
2200	0.	7.729	2.665	65.5
2300	0.	8.200	2.612	68.2
# AVERAGES	24.	12.	12.	12.
% OF DATA	100.	50.	50.	50.
MINIMUM	0.	7.211	1.845	64.654
MAXIMUM	0.	8.200	2.706	75.007
MEAN	0.	######	######	######
STD.DEV.	0.	######	######	######
% STD.DEV.	#####	######	######	######

24-HOUR REMOVAL EFICIENCY USING

$[MEAN]_{E_{IN}, E_{OUT}}$: .000%

NOTE: $[MEAN]^{Y}_{X}$ IS DEFINED AS:

THE MEAN FOR X DAYS USING Y-HOUR AVERAGES

DAILY SUMMARY OF RESULTS

LOCATION: RICKENBACKER AFB 1979
DATE: 2-16-79

TIME	LOAD	E IN	E OUT	EFF
0	0.	8.621	2.719	68.5
100	0.	8.401	2.957	64.8
200	0.	8.159	3.137	61.6
300	0.	7.790	3.097	60.2
400	0.	8.108	3.116	61.6
500	0.	7.939	3.353	57.8
600	0.	8.093	3.097	61.7
700	0.	7.805	3.482	55.4
800	0.	8.222	3.616	56.0
900	0.	6.913	3.234	53.2
1000	0.	6.740	2.925	56.6
1100	0.	5.988	2.730	54.4
1200	0.	######	######	#####
1300	0.	5.342	2.215	58.5
1400	0.	5.230	2.296	56.1
1500	0.	5.308	2.289	56.9
1600	0.	5.280	2.282	56.8
1700	0.	5.912	1.764	70.2
1800	0.	6.139	1.736	71.7
1900	0.	5.954	1.458	75.5
2000	0.	6.128	1.390	77.3
2100	0.	7.410	1.211	83.7
2200	0.	6.744	1.319	80.4
2300	0.	6.718	1.145	83.0
# AVERAGES	24.	23.	23.	23.
% OF DATA	100.	96.	96.	96.
MINIMUM	0.	5.230	1.145	53.220
MAXIMUM	0.	8.621	3.616	83.661
MEAN	0.	6.911	2.459	64.428
STD.DEV.	0.	1.143	.797	9.783
% STD.DEV.	#####	16.533	32.409	15.184

24-HOUR REMOVAL EFICIENCY USING

$$[MEAN]_1^{E_{IN}, E_{OUT}} : 64.411\%$$

NOTE: $[MEAN]_X^Y$ IS DEFINED AS:

THE MEAN FOR X DAYS USING Y-HOUR AVERAGES

DAILY SUMMARY OF RESULTS

LOCATION: RICKENBACKER AFB 1979
DATE: 2-17-79

TIME	LOAD	E IN	E OUT	EFF
0	0.	6.321	.616	90.3
100	0.	6.319	.598	90.5
200	0.	6.330	.591	90.7
300	0.	6.483	.611	90.6
400	0.	6.719	.655	90.3
500	0.	6.827	.681	90.0
600	0.	6.718	1.211	82.0
700	0.	6.854	1.562	77.2
800	0.	7.159	1.501	79.0
900	0.	7.168	1.194	83.3
1000	0.	7.967	######	#####
1100	0.	7.557	######	#####
1200	0.	7.680	######	#####
1300	0.	7.474	######	#####
1400	0.	7.916	######	#####
1500	0.	7.331	######	#####
1600	0.	7.213	######	#####
1700	0.	6.787	######	#####
1800	0.	6.054	######	#####
1900	0.	6.622	######	#####
2000	0.	7.004	######	#####
2100	0.	6.307	######	#####
2200	0.	6.081	######	#####
2300	0.	6.075	######	#####
# AVERAGES	24.	24.	10.	10.
% OF DATA	100.	100.	42.	42.
MINIMUM	0.	6.054	.591	77.217
MAXIMUM	0.	7.967	1.562	90.667
MEAN	0.	6.873	######	######
STD.DEV.	0.	.579	######	######
% STD.DEV.	#####	8.423	######	######

24-HOUR REMOVAL EFICIENCY USING

$[MEAN]_{IN}^{E}$, E_{OUT} : ######%

NOTE: $[MEAN]_{X}^{Y}$ IS DEFINED AS:

THE MEAN FOR X DAYS USING Y-HOUR AVERAGES

DAILY SUMMARY OF RESULTS

LOCATION: RICKENBACKER AFB 1979
DATE: 2-18-79

TIME	LOAD	E IN	E OUT	EFF
0	0.	6.531	######	#####
100	0.	6.397	######	#####
200	0.	6.465	######	#####
300	0.	6.874	######	#####
400	0.	6.540	2.053	68.6
500	0.	6.566	2.014	69.3
600	0.	6.345	1.940	69.4
700	0.	6.512	1.927	70.4
800	0.	6.994	1.904	72.8
900	0.	6.508	1.883	71.1
1000	0.	6.655	2.283	65.7
1100	0.	6.725	2.624	61.0
1200	0.	6.792	1.895	72.1
1300	0.	6.810	1.771	74.0
1400	0.	6.949	1.614	76.8
1500	0.	6.840	1.703	75.1
1600	0.	7.259	######	#####
1700	0.	7.228	######	#####
1800	0.	6.480	2.167	66.6
1900	0.	6.406	2.309	64.0
2000	0.	6.361	1.986	68.8
2100	0.	6.525	2.136	67.3
2200	0.	6.627	2.391	63.9
2300	0.	6.575	2.866	56.4
# AVERAGES	24.	24.	18.	18.
% OF DATA	100.	100.	75.	75.
MINIMUM	0.	6.345	1.614	56.407
MAXIMUM	0.	7.259	2.866	76.767
MEAN	0.	6.665	2.081	68.508
STD.DEV.	0.	.256	.319	5.104
% STD.DEV.	#####	3.835	15.331	7.450

24-HOUR REMOVAL EFICIENCY USING

$$\{MEAN\}_{1}^{1} \; E_{IN}, E_{OUT} : 68.771\%$$

NOTE: $\{MEAN\}_{X}^{Y}$ IS DEFINED AS:

THE MEAN FOR X DAYS USING Y-HOUR AVERAGES

DAILY SUMMARY OF RESULTS

LOCATION: RICKENBACKER AFB 1979
DATE: 2-19-79

TIME	LOAD	E IN	E OUT	EFF
0	0.	6.550	3.038	53.6
100	0.	6.468	3.470	46.4
200	0.	6.581	3.499	46.8
300	0.	6.945	3.503	49.6
400	0.	6.811	3.363	50.6
500	0.	6.761	3.645	46.1
600	0.	6.682	3.585	46.4
700	0.	6.927	3.431	50.5
800	0.	6.983	######	#####
900	0.	######	######	#####
1000	0.	######	######	#####
1100	0.	6.997	1.465	79.1
1200	0.	6.967	1.504	78.4
1300	0.	7.046	1.652	76.6
1400	0.	6.999	1.714	75.5
1500	0.	7.249	1.596	78.0
1600	0.	7.539	1.527	79.7
1700	0.	7.466	1.629	78.2
1800	0.	6.922	1.573	77.3
1900	0.	7.219	1.538	78.7
2000	0.	7.081	1.556	78.0
2100	0.	7.097	1.545	78.2
2200	0.	6.722	1.518	77.4
2300	0.	6.633	1.513	77.2
# AVERAGES	24.	22.	21.	21.
% OF DATA	100.	92.	88.	88.
MINIMUM	0.	6.468	1.465	46.087
MAXIMUM	0.	7.539	3.645	79.741
MEAN	0.	6.938	2.279	66.769
STD.DEV.	0.	.279	.942	14.612
% STD.DEV.	#####	4.022	41.343	21.885

24-HOUR REMOVAL EFICIENCY USING

$$(\text{MEAN})^{1}_{1} \; E_{IN}, E_{OUT} : 67.149\%$$

NOTE: $(\text{MEAN})^{Y}_{X}$ IS DEFINED AS:

THE MEAN FOR X DAYS USING Y-HOUR AVERAGES

DAILY SUMMARY OF RESULTS

LOCATION: RICKENBACKER AFB 1979
DATE: 2-20-79

TIME	LOAD	E IN	E OUT	EFF
0	0.	6.898	1.668	75.8
100	0.	6.705	1.866	72.2
200	0.	6.629	2.043	69.2
300	0.	6.778	1.979	70.8
400	0.	7.269	2.003	72.4
500	0.	7.395	2.036	72.5
600	0.	7.544	2.051	72.8
700	0.	7.686	2.142	72.1
800	0.	######	######	#####
900	0.	7.310	######	#####
1000	0.	7.182	######	#####
1100	0.	6.289	######	#####
1200	0.	6.289	5.062	19.5
1300	0.	######	######	#####
1400	0.	######	######	#####
1500	0.	######	######	#####
1600	0.	######	######	#####
1700	0.	######	######	#####
1800	0.	######	######	#####
1900	0.	######	######	#####
2000	0.	######	######	#####
2100	0.	######	######	#####
2200	0.	######	######	#####
2300	0.	######	######	#####
# AVERAGES	24.	12.	9.	9.
% OF DATA	100.	50.	38.	38.
MINIMUM	0.	6.289	1.668	19.499
MAXIMUM	0.	7.686	5.062	75.824
MEAN	0.	######	######	######
STD.DEV.	0.	######	######	######
% STD.DEV.	#####	######	######	######

24-HOUR REMOVAL EFICIENCY USING

$[MEAN]^{1}_{1}$ E , E : .000%
IN OUT

NOTE: $[MEAN]^{Y}_{X}$ IS DEFINED AS:

THE MEAN FOR X DAYS USING Y-HOUR AVERAGES

DAILY SUMMARY OF RESULTS

LOCATION: RICKENBACKER AFB 1979
DATE: 2-21-79

TIME	LOAD	E IN	E OUT	EFF
0	0.	######	######	#####
100	0.	######	######	#####
200	0.	######	######	#####
300	0.	######	######	#####
400	0.	######	######	#####
500	0.	######	######	#####
600	0.	######	######	#####
700	0.	######	######	#####
800	0.	######	######	#####
900	0.	######	######	#####
1000	0.	######	######	#####
1100	0.	######	######	#####
1200	0.	######	######	#####
1300	0.	######	######	#####
1400	0.	######	######	#####
1500	0.	######	######	#####
1600	0.	######	######	#####
1700	0.	######	######	#####
1800	0.	######	######	#####
1900	0.	######	######	#####
2000	0.	######	######	#####
2100	0.	######	######	#####
2200	0.	######	######	#####
2300	0.	######	######	#####
# AVERAGES	24.	0.	0.	0.
% OF DATA	100.	0.	0.	0.
MINIMUM	0.	######	######	######
MAXIMUM	0.	.000	.000	.000
MEAN	0.	######	######	######
STD.DEV.	0.	######	######	######
% STD.DEV.	#####	######	######	######

24-HOUR REMOVAL EFICIENCY USING

$$[\text{MEAN}]_1^{E_{IN},\,E_{OUT}} = .000\%$$

NOTE: $[\text{MEAN}]_X^Y$ IS DEFINED AS:

THE MEAN FOR X DAYS USING Y-HOUR AVERAGES

DAILY SUMMARY OF RESULTS

LOCATION: RICKENBACKER AFB 1979
DATE: 2-22-79

TIME	LOAD	E IN	E OUT	EFF
0	0.	######	######	#####
100	0.	######	######	#####
200	0.	######	######	#####
300	0.	######	######	#####
400	0.	######	######	#####
500	0.	######	######	#####
600	0.	######	######	#####
700	0.	######	######	#####
800	0.	######	######	#####
900	0.	######	######	#####
1000	0.	######	######	#####
1100	0.	######	######	#####
1200	0.	######	######	#####
1300	0.	######	######	#####
1400	0.	######	######	#####
1500	0.	######	######	#####
1600	0.	######	######	#####
1700	0.	######	######	#####
1800	0.	5.317	1.823	65.7
1900	0.	5.385	2.212	58.9
2000	0.	5.588	2.449	56.2
2100	0.	5.546	2.088	62.4
2200	0.	5.731	2.248	60.8
2300	0.	5.395	2.086	61.3
# AVERAGES	24.	6.	6.	6.
% OF DATA	100.	25.	25.	25.
MINIMUM	0.	5.317	1.823	56.164
MAXIMUM	0.	5.731	2.449	65.713
MEAN	0.	######	######	######
STD.DEV.	0.	######	######	######
% STD.DEV.	#####	######	######	######

24-HOUR REMOVAL EFICIENCY USING

$(MEAN)_1$ E_{IN} , E_{OUT} : .000%

NOTE: $(MEAN)_X^Y$ IS DEFINED AS:

THE MEAN FOR X DAYS USING Y-HOUR AVERAGES

DAILY SUMMARY OF RESULTS

LOCATION: RICKENBACKER AFB 1979
DATE: 2-23-79

TIME	LOAD	E IN	E OUT	EFF
0	0.	5.702	2.345	58.9
100	0.	5.458	2.318	57.5
200	0.	5.386	2.238	58.5
300	0.	5.394	2.277	57.8
400	0.	5.392	2.220	58.8
500	0.	######	######	#####
600	0.	######	######	#####
700	0.	######	######	#####
800	0.	######	######	#####
900	0.	######	######	#####
1000	0.	5.755	2.341	59.3
1100	0.	5.240	2.115	59.6
1200	0.	5.320	2.068	61.1
1300	0.	5.339	1.895	64.5
1400	0.	5.712	1.420	75.1
1500	0.	5.358	.988	81.6
1600	0.	5.184	1.254	75.8
1700	0.	5.170	1.835	64.5
1800	0.	######	######	#####
1900	0.	######	######	#####
2000	0.	######	######	#####
2100	0.	######	######	#####
2200	0.	######	######	#####
2300	0.	######	######	#####
# AVERAGES	24.	13.	13.	13.
% OF DATA	100.	54.	54.	54.
MINIMUM	0.	5.170	.988	57.534
MAXIMUM	0.	5.755	2.345	81.558
MEAN	0.	######	######	######
STD.DEV.	0.	######	######	######
% STD.DEV.	#####	######	######	######

24-HOUR REMOVAL EFICIENCY USING

$$[MEAN]_{1}^{1} \; E_{IN}, E_{OUT} : .000\%$$

NOTE: $[MEAN]_{X}^{Y}$ IS DEFINED AS:

THE MEAN FOR X DAYS USING Y-HOUR AVERAGES

DAILY SUMMARY OF RESULTS

LOCATION: RICKENBACKER AFB 1979
DATE: 2-24-79

TIME	LOAD	E IN	E OUT	EFF
0	0.	######	######	#####
100	0.	######	######	#####
200	0.	######	######	#####
300	0.	######	######	#####
400	0.	######	######	#####
500	0.	######	######	#####
600	0.	######	######	#####
700	0.	######	######	#####
800	0.	######	######	#####
900	0.	######	######	#####
1000	0.	######	######	#####
1100	0.	######	######	#####
1200	0.	######	######	#####
1300	0.	######	######	#####
1400	0.	######	######	#####
1500	0.	######	######	#####
1600	0.	######	######	#####
1700	0.	######	######	#####
1800	0.	######	######	#####
1900	0.	5.421	2.441	55.0
2000	0.	5.446	2.448	55.1
2100	0.	6.180	2.542	58.9
2200	0.	5.548	2.384	57.0
2300	0.	5.611	2.444	56.4
# AVERAGES	24.	5.	5.	5.
% OF DATA	100.	21.	21.	21.
MINIMUM	0.	5.421	2.384	54.969
MAXIMUM	0.	6.180	2.542	58.866
MEAN	0.	######	######	######
STD.DEV.	0.	######	######	######
% STD.DEV.	#####	######	######	######

24-HOUR REMOVAL EFICIENCY USING

$$[\text{MEAN}]\ \frac{E_{IN}}{E_{OUT}} : .000\%$$

NOTE: $[\text{MEAN}]_X^Y$ IS DEFINED AS:

THE MEAN FOR X DAYS USING Y-HOUR AVERAGES

DAILY SUMMARY OF RESULTS

LOCATION: RICKENBACKER AFB 1979
DATE: 2-25-79

TIME	LOAD	E IN	E OUT	EFF
0	0.	5.253	2.357	55.1
100	0.	5.352	2.221	58.5
200	0.	5.582	2.317	58.5
300	0.	5.323	2.125	60.1
400	0.	5.470	2.259	58.7
500	0.	5.705	2.434	57.3
600	0.	5.479	2.458	55.1
700	0.	5.329	2.462	53.8
800	0.	5.287	2.561	51.6
900	0.	4.876	2.069	57.6
1000	0.	5.328	2.146	59.7
1100	0.	6.628	2.586	61.0
1200	0.	5.946	1.956	67.1
1300	0.	6.497	2.665	59.0
1400	0.	6.114	2.696	55.9
1500	0.	6.327	2.734	56.8
1600	0.	4.445	2.306	48.1
1700	0.	4.882	2.422	50.4
1800	0.	7.002	3.403	51.4
1900	0.	5.497	2.862	47.9
2000	0.	5.645	2.969	47.4
2100	0.	5.787	2.921	49.5
2200	0.	5.914	3.154	46.7
2300	0.	5.325	2.954	44.5
# AVERAGES	24.	24.	24.	24.
% OF DATA	100.	100.	100.	100.
MINIMUM	0.	4.445	1.956	44.520
MAXIMUM	0.	7.002	3.403	67.102
MEAN	0.	5.625	2.543	54.656
STD.DEV.	0.	.585	.364	5.553
% STD.DEV.	#####	10.397	14.323	10.161

24-HOUR REMOVAL EFICIENCY USING

$$\{MEAN\}_1^{\ } E_{IN}, E_{OUT} : 54.785\%$$

NOTE: $\{MEAN\}_X^Y$ IS DEFINED AS:

THE MEAN FOR X DAYS USING Y-HOUR AVERAGES

DAILY SUMMARY OF RESULTS

LOCATION: RICKENBACKER AFB 1979
DATE: 2-26-79

TIME	LOAD	E IN	E OUT	EFF
0	0.	5.675	2.959	47.9
100	0.	5.599	3.262	41.7
200	0.	5.055	2.737	45.9
300	0.	5.519	3.098	43.9
400	0.	5.596	3.050	45.5
500	0.	5.131	2.970	42.1
600	0.	######	######	#####
700	0.	5.560	2.926	47.4
800	0.	6.290	3.430	45.5
900	0.	5.110	2.437	52.3
1000	0.	5.550	2.592	53.3
1100	0.	3.435	1.039	69.7
1200	0.	######	######	#####
1300	0.	7.247	1.313	81.9
1400	0.	######	######	#####
1500	0.	4.570	1.606	64.9
1600	0.	5.020	.971	80.7
1700	0.	5.475	.836	84.7
1800	0.	4.821	.925	80.8
1900	0.	######	######	#####
2000	0.	######	######	#####
2100	0.	######	######	#####
2200	0.	######	######	#####
2300	0.	4.819	.527	89.1
# AVERAGES	24.	17.	17.	17.
% OF DATA	100.	71.	71.	71.
MINIMUM	0.	3.435	.527	41.738
MAXIMUM	0.	7.247	3.430	89.061
MEAN	0.	######	######	######
STD.DEV.	0.	######	######	######
% STD.DEV.	#####	######	######	######

24-HOUR REMOVAL EFICIENCY USING

$$\{MEAN\}_{1}^{1} \; E_{IN}, E_{OUT} : .000\%$$

NOTE: $\{MEAN\}_{X}^{Y}$ IS DEFINED AS:

THE MEAN FOR X DAYS USING Y-HOUR AVERAGES

DAILY SUMMARY OF RESULTS

LOCATION: RICKENBACKER AFB 1979
DATE: 2-27-79

TIME	LOAD	E IN	E OUT	EFF
0	0.	5.066	1.125	77.8
100	0.	5.178	1.623	68.7
200	0.	5.640	1.856	67.1
300	0.	4.644	1.437	69.0
400	0.	5.246	1.662	68.3
500	0.	5.004	1.389	72.2
600	0.	4.936	1.340	72.8
700	0.	5.462	1.499	72.6
800	0.	4.985	2.124	57.4
900	0.	######	######	#####
1000	0.	######	######	#####
1100	0.	######	######	#####
1200	0.	######	######	#####
1300	0.	######	######	#####
1400	0.	######	######	#####
1500	0.	######	######	#####
1600	0.	######	######	#####
1700	0.	######	######	#####
1800	0.	######	######	#####
1900	0.	######	######	#####
2000	0.	######	######	#####
2100	0.	######	######	#####
2200	0.	######	######	#####
2300	0.	######	######	#####
# AVERAGES	24.	9.	9.	9.
% OF DATA	100.	38.	38.	38.
MINIMUM	0.	4.644	1.125	57.392
MAXIMUM	0.	5.640	2.124	77.801
MEAN	0.	######	######	######
STD.DEV.	0.	######	######	######
% STD.DEV.	#####	######	######	######

24-HOUR REMOVAL EFICIENCY USING

$$(\text{MEAN})_{\text{IN}}^{\text{E}} , \text{E}_{\text{OUT}} : \quad .000\%$$

NOTE: $(\text{MEAN})_{X}^{Y}$ IS DEFINED AS:

THE MEAN FOR X DAYS USING Y-HOUR AVERAGES

DAILY SUMMARY OF RESULTS

LOCATION: RICKENBACKER AFB 1979
DATE: 2-28-79

TIME	LOAD	E IN	E OUT	EFF
0	0.	######	######	#####
100	0.	######	######	#####
200	0.	######	######	#####
300	0.	######	######	#####
400	0.	######	######	#####
500	0.	######	######	#####
600	0.	######	######	#####
700	0.	######	######	#####
800	0.	######	######	#####
900	0.	######	######	#####
1000	0.	######	######	#####
1100	0.	######	######	#####
1200	0.	######	######	#####
1300	0.	######	######	#####
1400	0.	######	######	#####
1500	0.	######	######	#####
1600	0.	5.050	2.322	54.0
1700	0.	5.073	2.173	57.2
1800	0.	4.965	2.134	57.0
1900	0.	5.102	2.029	60.2
2000	0.	4.979	2.126	57.3
2100	0.	5.125	2.044	60.1
2200	0.	5.102	1.903	62.7
2300	0.	4.988	1.852	62.9
# AVERAGES	24.	8.	8.	8.
% OF DATA	100.	33.	33.	33.
MINIMUM	0.	4.965	1.852	54.020
MAXIMUM	0.	5.125	2.322	62.862
MEAN	0.	######	######	######
STD.DEV.	0.	######	######	######
% STD.DEV.	#####	######	######	######

24-HOUR REMOVAL EFICIENCY USING

$[MEAN]_1^{E_{IN}, E_{OUT}}$: .000%

NOTE: $[MEAN]_X^Y$ IS DEFINED AS:

THE MEAN FOR X DAYS USING Y-HOUR AVERAGES

DAILY SUMMARY OF RESULTS

LOCATION: RICKENBACKER AFB 1979
DATE: 3- 1-79

TIME	LOAD	E IN	E OUT	EFF
0	0.	5.019	2.238	55.4
100	0.	5.127	2.056	59.9
200	0.	5.076	1.980	61.0
300	0.	5.160	1.972	61.8
400	0.	5.189	2.011	61.2
500	0.	5.041	1.998	60.4
600	0.	5.014	2.118	57.8
700	0.	5.105	2.191	57.1
800	0.	######	######	#####
900	0.	######	######	#####
1000	0.	5.095	2.081	59.2
1100	0.	5.049	1.919	62.0
1200	0.	######	2.042	#####
1300	0.	5.503	1.940	64.8
1400	0.	5.862	2.026	65.4
1500	0.	5.488	1.977	64.0
1600	0.	5.521	1.849	66.5
1700	0.	5.472	1.921	64.9
1800	0.	5.440	1.996	63.3
1900	0.	5.577	2.051	63.2
2000	0.	5.601	1.982	64.6
2100	0.	5.728	2.034	64.5
2200	0.	5.933	2.050	65.4
2300	0.	5.951	1.913	67.9
# AVERAGES	24.	21.	22.	21.
% OF DATA	100.	88.	92.	88.
MINIMUM	0.	5.014	1.849	55.403
MAXIMUM	0.	5.951	2.238	67.850
MEAN	0.	5.379	2.016	62.391
STD.DEV.	0.	.318	.090	3.267
% STD.DEV.	#####	5.908	4.458	5.237

24-HOUR REMOVAL EFICIENCY USING

$(MEAN)_1$ E_{IN} , E_{OUT} : 62.525%

NOTE: $(MEAN)_X^Y$ IS DEFINED AS:

THE MEAN FOR X DAYS USING Y-HOUR AVERAGES

DAILY SUMMARY OF RESULTS

LOCATION: RICKENBACKER AFB 1979
DATE: 3- 2-79

TIME	LOAD	E IN	E OUT	EFF
0	0.	5.703	2.077	63.6
100	0.	5.611	2.050	63.5
200	0.	5.732	2.064	64.0
300	0.	5.647	2.085	63.1
400	0.	5.493	2.145	60.9
500	0.	5.491	2.186	60.2
600	0.	5.532	2.100	62.0
700	0.	5.557	2.132	61.6
800	0.	5.627	2.108	62.5
900	0.	5.667	1.951	65.6
1000	0.	5.655	2.121	62.5
1100	0.	5.425	1.965	63.8
1200	0.	5.560	1.591	71.4
1300	0.	5.579	1.441	74.2
1400	0.	5.564	1.341	75.9
1500	0.	5.619	1.437	74.4
1600	0.	5.676	1.435	74.7
1700	0.	5.949	1.281	78.5
1800	0.	5.919	1.389	76.5
1900	0.	6.076	1.385	77.2
2000	0.	6.058	1.444	76.2
2100	0.	5.969	1.491	75.0
2200	0.	6.027	1.538	74.5
2300	0.	5.943	1.665	72.0
# AVERAGES	24.	24.	24.	24.
% OF DATA	100.	100.	100.	100.
MINIMUM	0.	5.425	1.281	60.190
MAXIMUM	0.	6.076	2.186	78.468
MEAN	0.	5.712	1.768	68.907
STD.DEV.	0.	.199	.333	6.497
% STD.DEV.	####.	3.476	18.836	9.428

24-HOUR REMOVAL EFICIENCY USING

$$(MEAN)_1 \; E_{IN}, E_{OUT} : 69.054\%$$

NOTE: $(MEAN)^{Y}_{X}$ IS DEFINED AS:

THE MEAN FOR X DAYS USING Y-HOUR AVERAGES

DAILY SUMMARY OF RESULTS

LOCATION: RICKENBACKER AFB 1979
DATE: 3- 3-79

TIME	LOAD	E IN	E OUT	EFF
0	0.	6.015	1.683	72.0
100	0.	6.029	1.727	71.4
200	0.	6.040	1.645	72.8
300	0.	6.066	1.718	71.7
400	0.	6.119	1.582	74.1
500	0.	6.145	1.624	73.6
600	0.	5.902	1.652	72.0
700	0.	6.015	1.651	72.5
800	0.	6.050	1.621	73.2
900	0.	5.896	1.650	72.0
1000	0.	5.887	1.638	72.2
1100	0.	6.079	1.640	73.0
1200	0.	6.060	1.665	72.5
1300	0.	6.382	1.727	72.9
1400	0.	6.370	1.648	74.1
1500	0.	6.366	1.701	73.3
1600	0.	6.581	2.008	69.5
1700	0.	6.348	1.815	71.4
1800	0.	6.237	1.781	71.4
1900	0.	6.194	1.846	70.2
2000	0.	6.352	1.851	70.9
2100	0.	6.376	1.770	72.2
2200	0.	6.379	1.806	71.7
2300	0.	6.242	1.754	71.9
# AVERAGES	24.	24.	24.	24.
% OF DATA	100.	100.	100.	100.
MINIMUM	0.	5.887	1.582	69.478
MAXIMUM	0.	6.581	2.008	74.145
MEAN	0.	6.172	1.717	72.191
STD.DEV.	0.	.188	.098	1.127
% STD.DEV.	#####	3.047	5.709	1.561

24-HOUR REMOVAL EFICIENCY USING

$[\text{MEAN}]_1 \; E_{IN}, E_{OUT}$: 72.183%

NOTE: $[\text{MEAN}]^{Y}_{X}$ IS DEFINED AS:

THE MEAN FOR X DAYS USING Y-HOUR AVERAGES

DAILY SUMMARY OF RESULTS

LOCATION: RICKENBACKER AFB 1979
DATE: 3- 4-79

TIME	LOAD	E IN	E OUT	EFF
0	0.	6.047	1.743	71.2
100	0.	6.283	1.700	72.9
200	0.	6.281	1.834	70.8
300	0.	6.316	1.910	69.8
400	0.	6.584	1.854	71.8
500	0.	6.296	2.020	67.9
600	0.	6.259	2.029	67.6
700	0.	6.458	1.980	69.3
800	0.	6.321	1.958	69.0
900	0.	6.419	1.890	70.6
1000	0.	6.284	1.767	71.9
1100	0.	6.341	1.637	74.2
1200	0.	6.058	1.422	76.5
1300	0.	5.927	1.463	75.3
1400	0.	5.745	1.529	73.4
1500	0.	5.724	1.535	73.2
1600	0.	6.049	1.677	72.3
1700	0.	6.145	2.061	66.5
1800	0.	5.941	2.249	62.1
1900	0.	5.998	2.122	64.6
2000	0.	6.034	2.033	66.3
2100	0.	5.872	2.061	64.9
2200	0.	5.919	2.255	61.9
2300	0.	5.999	2.230	62.8
# AVERAGES	24.	24.	24.	24.
% OF DATA	100.	100.	100.	100.
MINIMUM	0.	5.724	1.422	61.898
MAXIMUM	0.	6.584	2.255	76.526
MEAN	0.	6.138	1.873	69.454
STD.DEV.	0.	.227	.247	4.156
% STD.DEV.	#####	3.702	13.161	5.984

24-HOUR REMOVAL EFICIENCY USING

$(MEAN)_1 \; E_{IN}, E_{OUT}$: 69.479%

NOTE: $(MEAN)^Y_X$ IS DEFINED AS:

THE MEAN FOR X DAYS USING Y-HOUR AVERAGES

DAILY SUMMARY OF RESULTS

LOCATION: RICKENBACKER AFB 1979
DATE: 3- 5-79

TIME	LOAD	E IN	E OUT	EFF
0	0.	5.947	2.206	62.9
100	0.	6.149	2.126	65.4
200	0.	5.997	2.315	61.4
300	0.	6.176	2.079	66.3
400	0.	5.942	1.990	66.5
500	0.	5.854	2.014	65.6
600	0.	5.851	2.242	61.7
700	0.	5.865	2.338	60.1
800	0.	5.987	2.426	59.5
900	0.	6.007	2.297	61.8
1000	0.	6.630	2.140	67.7
1100	0.	6.067	2.079	65.7
1200	0.	5.734	2.059	64.1
1300	0.	######	######	#####
1400	0.	######	######	#####
1500	0.	######	######	#####
1600	0.	######	######	#####
1700	0.	######	######	#####
1800	0.	######	######	#####
1900	0.	######	######	#####
2000	0.	######	######	#####
2100	0.	######	######	#####
2200	0.	######	######	#####
2300	0.	######	######	#####
# AVERAGES	24.	13.	13.	13.
% OF DATA	100.	54.	54.	54.
MINIMUM	0.	5.734	1.998	59.485
MAXIMUM	0.	6.630	2.426	67.722
MEAN	0.	######	######	######
STD.DEV.	0.	######	######	######
% STD.DEV.	#####	######	######	######

24-HOUR REMOVAL EFICIENCY USING

$[MEAN]_1^1$ E IN , E OUT : .000%

NOTE: $[MEAN]_X^Y$ IS DEFINED AS:

THE MEAN FOR X DAYS USING Y-HOUR AVERAGES

DAILY SUMMARY OF RESULTS

LOCATION: RICKENBACKER AFB 1979
DATE: 3- 6-79

TIME	LOAD	E IN	E OUT	EFF
0	0.	######	######	#####
100	0.	######	######	#####
200	0.	######	######	#####
300	0.	######	######	#####
400	0.	######	######	#####
500	0.	######	######	#####
600	0.	######	######	#####
700	0.	######	######	#####
800	0.	######	######	#####
900	0.	######	######	#####
1000	0.	######	######	#####
1100	0.	######	######	#####
1200	0.	######	######	#####
1300	0.	######	######	#####
1400	0.	6.042	2.072	65.7
1500	0.	6.137	1.993	67.5
1600	0.	6.326	1.902	69.9
1700	0.	6.220	1.833	70.5
1800	0.	6.090	1.737	71.5
1900	0.	6.099	1.786	70.7
2000	0.	6.020	1.856	69.2
2100	0.	6.216	1.881	69.7
2200	0.	5.861	1.877	68.0
2300	0.	5.790	1.926	66.7
# AVERAGES	24.	10.	10.	10.
% OF DATA	100.	42.	42.	42.
MINIMUM	0.	5.790	1.737	65.702
MAXIMUM	0.	6.326	2.072	71.484
MEAN	0.	######	######	######
STD.DEV.	0.	######	######	######
% STD.DEV.	#####	######	######	######

24-HOUR REMOVAL EFICIENCY USING

$$\{MEAN\}_1 \; E_{IN}, E_{OUT} : .000\%$$

NOTE: $\{MEAN\}_X^Y$ IS DEFINED AS:

THE MEAN FOR X DAYS USING Y-HOUR AVERAGES

DAILY SUMMARY OF RESULTS

LOCATION: RICKENBACKER AFB 1979
DATE: 3- 7-79

TIME	LOAD	E IN	E OUT	EFF
0	0.	5.865	1.849	68.5
100	0.	5.910	1.892	68.0
200	0.	5.888	1.987	66.3
300	0.	5.980	1.977	66.9
400	0.	6.013	2.081	65.4
500	0.	6.284	2.068	67.1
600	0.	5.995	2.048	65.8
700	0.	6.006	2.131	64.5
800	0.	6.343	2.088	67.1
900	0.	5.951	1.967	66.9
1000	0.	6.091	1.965	67.7
1100	0.	######	######	#####
1200	0.	5.981	2.320	61.2
1300	0.	6.114	2.333	61.9
1400	0.	6.326	2.175	65.6
1500	0.	5.896	2.048	65.3
1600	0.	6.225	1.882	69.8
1700	0.	6.322	1.669	73.6
1800	0.	6.203	1.769	71.5
1900	0.	6.133	1.822	70.3
2000	0.	6.324	1.689	73.3
2100	0.	6.349	1.965	69.0
2200	0.	6.256	1.604	74.4
2300	0.	6.131	1.195	80.5
# AVERAGES	24.	23.	23.	23.
% OF DATA	100.	96.	96.	96.
MINIMUM	0.	5.865	1.195	61.210
MAXIMUM	0.	6.349	2.333	80.503
MEAN	0.	6.112	1.936	68.285
STD.DEV.	0.	.167	.247	4.284
% STD.DEV.	#####	2.725	12.739	6.274

24-HOUR REMOVAL EFICIENCY USING

$[MEAN]_1$ E_{IN} , E_{OUT} : 68.330%

NOTE: $[MEAN]^Y_X$ IS DEFINED AS:

THE MEAN FOR X DAYS USING Y-HOUR AVERAGES

30 OPERATING DAYS
SUMMARY OF RESULTS
USING 1-HOUR AVERAGES

LOCATION: RICKENBACKER AFB 1979
DATE: 1-22-79

	LOAD	E_{IN}	E_{OUT}	EFF
# AVERAGES	720.	691.	599.	592.
% OF DATA	100.	96.	83.	82.
MINIMUM	0.	4.445	1.185	26.270
MAXIMUM	0.	8.642	5.014	83.661
MEAN	0.	6.240	2.571	58.783
STD.DEV.	0.	.595	.665	9.979
% STD.DEV.	0.	9.529	25.862	16.975

30-DAY REMOVAL EFICIENCY USING

$$\{MEAN\}_{30}^{1} \; E_{IN} \, , \, E_{OUT} \; : \; 58.801\%$$

NOTE: $\{MEAN\}_{X}^{Y}$ IS DEFINED AS:

THE MEAN FOR X DAYS USING Y-HOUR AVERAGES

30 OPERATING DAYS
SUMMARY OF RESULTS
USING 24-HOUR AVERAGES

LOCATION: RICKENBACKER AFB 1979
DATE: 1-22-79

DATE	LOAD	E IN	E OUT	EFF
1-24-79	0.	6.281	######	#####
1-25-79	0.	5.467	2.841	48.1
1-26-79	0.	6.273	2.698	56.6
1-27-79	0.	6.485	1.877	70.6
1-28-79	0.	6.016	1.958	67.6
1-29-79	0.	6.201	2.463	60.2
1-30-79	0.	6.158	2.642	57.0
1-31-79	0.	6.228	2.686	56.9
2- 1-79	0.	6.298	3.213	49.0
2- 2-79	0.	6.253	3.377	46.1
2- 3-79	0.	6.278	2.931	52.5
2- 4-79	0.	6.399	3.344	47.5
2- 5-79	0.	6.931	3.560	48.8
2- 6-79	0.	6.790	3.121	54.0
2- 7-79	0.	6.372	2.719	57.2
2- 8-79	0.	5.916	2.740	53.6
2- 9-79	0.	6.419	2.711	57.8
2-10-79	0.	6.342	3.095	51.4
2-11-79	0.	5.781	######	#####
2-12-79	0.	5.822	######	#####
2-16-79	0.	6.911	2.459	64.4
2-17-79	0.	6.873	######	#####
2-18-79	0.	6.665	2.081	68.5
2-19-79	0.	6.938	2.279	66.8
2-85-79	0.	5.625	2.543	54.7
3- 1-79	0.	5.379	2.016	62.4
3- 2-79	0.	5.712	1.768	68.9
3- 3-79	0.	6.172	1.717	72.2
3- 4-79	0.	6.138	1.873	69.5
3- 7-79	0.	6.112	1.936	68.3
# AVERAGES	30.	30.	26.	26.
% OF DATA	97.	97.	84.	84.
MINIMUM	0.	5.379	1.717	46.117
MAXIMUM	0.	6.938	3.560	72.191
MEAN	0.	6.241	2.563	58.864
STD.DEV.	0.	.416	.540	8.200
% STD.DEV.	#####	6.673	21.083	13.930

30-DAY REMOVAL EFICIENCY USING

$[\text{MEAN}]_{30}^{24}$ E IN , E OUT : 58.927%

NOTE: $[\text{MEAN}]_{X}^{Y}$ IS DEFINED AS:

THE MEAN FOR X DAYS USING Y-HOUR AVERAGES

FREQUENCY DISTRIBUTION

LOCATION: RICKENBACKER AFB 1979
STARTING DATE: 1-22-79
PARAMETER: 1-HOUR EIN, LB/MMBTU

PARAMETER RANGE	OCCURRENCE FREQUENCY	OCCURRENCE PERCENTAGE	HISTOGRAM
4.400 - 4.910	7.	1.	
4.910 - 5.420	74.	9.	****
5.420 - 5.930	173.	21.	**********
5.930 - 6.440	327.	39.	**********
6.440 - 6.950	144.	17.	*********
6.950 - 7.460	64.	8.	****
7.460 - 7.970	25.	3.	**
7.970 - 8.480	10.	1.	*
8.480 - 8.990	3.	0.	
8.990 - 9.500	0.	0.	

BEYOND MIN/MAX RANGE 2.
TOTAL POPULATION 829.

CUMULATIVE DISTRIBUTION

LOCATION: RICKENBACKER AFB 1979
DATE: 1-22-79
PARAMETER: 1-HOUR EIN, LB/MMBTU

PARAMETER RANGE	OCCURRENCE FREQUENCY	OCCURRENCE PERCENTAGE	HISTOGRAM
4.400 - 4.910	7.	1.	
4.400 - 5.420	81.	10.	*****
4.400 - 5.930	254.	31.	**********
4.400 - 6.440	581.	70.	**********
4.400 - 6.950	725.	87.	**********
4.400 - 7.460	789.	95.	**********
4.400 - 7.970	814.	98.	**********
4.400 - 8.480	824.	99.	**********
4.400 - 8.990	827.	100.	**********
4.400 - 9.500	827.	100.	**********

BEYOND MIN/MAX RANGE 2.
TOTAL POPULATION 829.

FREQUENCY DISTRIBUTION

LOCATION: RICKENBACKER AFB 1979
STARTING DATE: 1-22-79
PARAMETER: 1-HOUR LOG EIN

PARAMETER RANGE	OCCURRENCE FREQUENCY	PERCENTAGE	HISTOGRAM
.640 - .674	3.	0.	
.674 - .708	26.	3.	**
.708 - .742	85.	10.	*****
.742 - .776	157.	19.	*********
.776 - .810	314.	38.	**********
.810 - .844	145.	17.	*********
.844 - .878	64.	8.	****
.878 - .912	26.	3.	**
.912 - .946	6.	1.	
.946 - .980	0.	0.	

BEYOND MIN/MAX RANGE 3.
TOTAL POPULATION 829.

CUMULATIVE DISTRIBUTION

LOCATION: RICKENBACKER AFB 1979
DATE: 1-22-79
PARAMETER: 1-HOUR LOG EIN

PARAMETER RANGE	OCCURRENCE FREQUENCY	PERCENTAGE	HISTOGRAM
.640 - .674	3.	0.	
.640 - .708	29.	3.	**
.640 - .742	114.	14.	*******
.640 - .776	271.	33.	**********
.640 - .810	585.	71.	**********
.640 - .844	730.	88.	**********
.640 - .878	794.	96.	**********
.640 - .912	820.	99.	**********
.640 - .946	826.	100.	**********
.640 - .980	826.	100.	**********

BEYOND MIN/MAX RANGE 3.
TOTAL POPULATION 829.

FREQUENCY DISTRIBUTION

LOCATION: RICKENBACKER AFB 1979
STARTING DATE: 1-22-79
PARAMETER: 1-HOUR EOUT, LB/MMBTU

PARAMETER RANGE	OCCURRENCE FREQUENCY	PERCENTAGE	HISTOGRAM
.400 - .870	8.	1.	*
.870 - 1.340	18.	2.	*
1.340 - 1.810	93.	12.	******
1.810 - 2.280	187.	24.	**********
2.280 - 2.750	211.	27.	**********
2.750 - 3.220	153.	20.	**********
3.220 - 3.690	80.	10.	*****
3.690 - 4.160	13.	2.	*
4.160 - 4.630	7.	1.	
4.630 - 5.100	0.	0.	

BEYOND MIN/MAX RANGE 5.
TOTAL POPULATION 775.

CUMULATIVE DISTRIBUTION

LOCATION: RICKENBACKER AFB 1979
DATE: 1-22-79
PARAMETER: 1-HOUR EOUT, LB/MMBTU

PARAMETER RANGE	OCCURRENCE FREQUENCY	PERCENTAGE	HISTOGRAM
.400 - .870	8.	1.	*
.400 - 1.340	26.	3.	**
.400 - 1.810	119.	15.	********
.400 - 2.280	306.	39.	**********
.400 - 2.750	517.	67.	**********
.400 - 3.220	670.	86.	**********
.400 - 3.690	750.	97.	**********
.400 - 4.160	763.	98.	**********
.400 - 4.630	770.	99.	**********
.400 - 5.100	770.	99.	**********

BEYOND MIN/MAX RANGE 5.
TOTAL POPULATION 775.

FREQUENCY DISTRIBUTION

LOCATION: RICKENBACKER AFB 1979
STARTING DATE: 1-22-79
PARAMETER: 1-HOUR LOG EOUT

PARAMETER RANGE	OCCURRENCE FREQUENCY	PERCENTAGE	HISTOGRAM
-.400 - -.289	0.	0.	
-.289 - -.178	6.	1.	
-.178 - -.067	2.	0.	
-.067 - .044	4.	1.	
.044 - .155	22.	3.	*
.155 - .266	95.	12.	******
.266 - .377	222.	29.	**********
.377 - .488	276.	36.	**********
.488 - .599	131.	17.	********
.599 - .710	0.	0.	

BEYOND MIN/MAX RANGE 17.
TOTAL POPULATION 775.

CUMULATIVE DISTRIBUTION

LOCATION: RICKENBACKER AFB 1979
DATE: 1-22-79
PARAMETER: 1-HOUR LOG EOUT

PARAMETER RANGE	OCCURRENCE FREQUENCY	PERCENTAGE	HISTOGRAM
-.400 - -.289	0.	0.	
-.400 - -.178	6.	1.	
-.400 - -.067	8.	1.	*
-.400 - .044	12.	2.	*
-.400 - .155	34.	4.	**
-.400 - .266	129.	17.	********
-.400 - .377	351.	45.	**********
-.400 - .488	627.	81.	**********
-.400 - .599	758.	98.	**********
-.400 - .710	758.	98.	**********

BEYOND MIN/MAX RANGE 17.
TOTAL POPULATION 775.

FREQUENCY DISTRIBUTION

LOCATION: RICKENBACKER AFB 1979
STARTING DATE: 1-22-79
PARAMETER: 1-HOUR % EFFICIENCY

PARAMETER RANGE	OCCURRENCE FREQUENCY	OCCURRENCE PERCENTAGE	HISTOGRAM
25.000 - 32.000	4.	1.	
32.000 - 39.000	9.	1.	*
39.000 - 46.000	42.	5.	***
46.000 - 53.000	135.	18.	*********
53.000 - 60.000	217.	28.	**********
60.000 - 67.000	169.	22.	**********
67.000 - 74.000	123.	16.	********
74.000 - 81.000	49.	6.	***
81.000 - 88.000	12.	2.	*
88.000 - 95.000	0.	0.	

BEYOND MIN/MAX RANGE 0.
TOTAL POPULATION 768.

CUMULATIVE DISTRIBUTION

LOCATION: RICKENBACKER AFB 1979
DATE: 1-22-79
PARAMETER: 1-HOUR % EFFICIENCY

PARAMETER RANGE	OCCURRENCE FREQUENCY	OCCURRENCE PERCENTAGE	HISTOGRAM
25.000 - 32.000	4.	1.	
25.000 - 39.000	13.	2.	*
25.000 - 46.000	55.	7.	****
25.000 - 53.000	190.	25.	**********
25.000 - 60.000	407.	53.	**********
25.000 - 67.000	576.	75.	**********
25.000 - 74.000	699.	91.	**********
25.000 - 81.000	748.	97.	**********
25.000 - 88.000	760.	99.	**********
25.000 - 95.000	760.	99.	**********

BEYOND MIN/MAX RANGE 0.
TOTAL POPULATION 768.

FREQUENCY DISTRIBUTION

LOCATION: RICKENBACKER AFB 1979
STARTING DATE: 1-22-79
PARAMETER: 1-HOUR LOG(% EFFICIENCY)

PARAMETER RANGE	OCCURRENCE FREQUENCY	PERCENTAGE	HISTOGRAM
1.400 - 1.458	2.	0.	
1.458 - 1.516	3.	0.	
1.516 - 1.574	6.	1.	
1.574 - 1.632	12.	2.	*
1.632 - 1.690	94.	12.	******
1.690 - 1.748	165.	21.	**********
1.748 - 1.806	228.	30.	**********
1.806 - 1.864	178.	23.	**********
1.864 - 1.922	69.	9.	****
1.922 - 1.980	0.	0.	

BEYOND MIN/MAX RANGE 11.
TOTAL POPULATION 768.

CUMULATIVE DISTRIBUTION

LOCATION: RICKENBACKER AFB 1979
DATE: 1-22-79
PARAMETER: 1-HOUR LOG(% EFFICIENCY)

PARAMETER RANGE	OCCURRENCE FREQUENCY	PERCENTAGE	HISTOGRAM
1.400 - 1.458	2.	0.	
1.400 - 1.516	5.	1.	
1.400 - 1.574	11.	1.	*
1.400 - 1.632	23.	3.	*
1.400 - 1.690	117.	15.	********
1.400 - 1.748	282.	37.	**********
1.400 - 1.806	510.	66.	**********
1.400 - 1.864	688.	90.	**********
1.400 - 1.922	757.	99.	**********
1.400 - 1.980	757.	99.	**********

BEYOND MIN/MAX RANGE 11.
TOTAL POPULATION 768.

FREQUENCY DISTRIBUTION

LOCATION: RICKENBACKER AFB 1979
STARTING DATE: 1-22-79
PARAMETER: 1-HOUR 100-% EFFICIENCY

PARAMETER RANGE	OCCURRENCE FREQUENCY	PERCENTAGE	HISTOGRAM
15.000 - 21.000	20.	3.	*
21.000 - 27.000	52.	7.	***
27.000 - 33.000	111.	14.	*******
33.000 - 39.000	143.	19.	*********
39.000 - 45.000	182.	24.	**********
45.000 - 51.000	133.	17.	*********
51.000 - 57.000	94.	12.	******
57.000 - 63.000	13.	2.	*
63.000 - 69.000	7.	1.	
69.000 - 75.000	0.	0.	

BEYOND MIN/MAX RANGE 13.
TOTAL POPULATION 768.

CUMULATIVE DISTRIBUTION

LOCATION: RICKENBACKER AFB 1979
DATE: 1-22-79
PARAMETER: 1-HOUR 100-% EFFICIENCY

PARAMETER RANGE	OCCURRENCE FREQUENCY	PERCENTAGE	HISTOGRAM
15.000 - 21.000	20.	3.	*
15.000 - 27.000	72.	9.	*****
15.000 - 33.000	183.	24.	**********
15.000 - 39.000	326.	42.	**********
15.000 - 45.000	508.	66.	**********
15.000 - 51.000	641.	83.	**********
15.000 - 57.000	735.	96.	**********
15.000 - 63.000	748.	97.	**********
15.000 - 69.000	755.	98.	**********
15.000 - 75.000	755.	98.	**********

BEYOND MIN/MAX RANGE 13.
TOTAL POPULATION 768.

FREQUENCY DISTRIBUTION

LOCATION: RICKENBACKER AFB 1979
STARTING DATE: 1-22-79
PARAMETER: 1-HOUR LOG(100-% EFFICIENCY)

PARAMETER RANGE	OCCURRENCE FREQUENCY	OCCURRENCE PERCENTAGE	HISTOGRAM
.700 - .820	0.	0.	
.820 - .940	0.	0.	
.940 - 1.060	7.	1.	
1.060 - 1.180	1.	0.	
1.180 - 1.300	16.	2.	*
1.300 - 1.420	46.	6.	***
1.420 - 1.540	156.	20.	**********
1.540 - 1.660	313.	41.	**********
1.660 - 1.780	215.	28.	**********
1.780 - 1.900	0.	0.	

BEYOND MIN/MAX RANGE 14.
TOTAL POPULATION 768.

CUMULATIVE DISTRIBUTION

LOCATION: RICKENBACKER AFB 1979
DATE: 1-22-79
PARAMETER: 1-HOUR LOG(100-% EFFICIENCY)

PARAMETER RANGE	OCCURRENCE FREQUENCY	OCCURRENCE PERCENTAGE	HISTOGRAM
.700 - .820	0.	0.	
.700 - .940	0.	0.	
.700 - 1.060	7.	1.	
.700 - 1.180	8.	1.	*
.700 - 1.300	24.	3.	**
.700 - 1.420	70.	9.	*****
.700 - 1.540	226.	29.	**********
.700 - 1.660	539.	70.	**********
.700 - 1.780	754.	98.	**********
.700 - 1.900	754.	98.	**********

BEYOND MIN/MAX RANGE 14.
TOTAL POPULATION 768.

FREQUENCY DISTRIBUTION

LOCATION: RICKENBACKER AFB 1979
STARTING DATE: 1-22-79
PARAMETER: 24-HOUR EIN, LB/MMBTU

PARAMETER RANGE	OCCURRENCE FREQUENCY	PERCENTAGE	HISTOGRAM
4.400 - 4.910	0.	0.	
4.910 - 5.420	1.	3.	**
5.420 - 5.930	6.	20.	**********
5.930 - 6.440	16.	53.	**********
6.440 - 6.950	7.	23.	**********
6.950 - 7.460	0.	0.	
7.460 - 7.970	0.	0.	
7.970 - 8.480	0.	0.	
8.480 - 8.990	0.	0.	
8.990 - 9.500	0.	0.	

BEYOND MIN/MAX RANGE 0.
TOTAL POPULATION 30.

CUMULATIVE DISTRIBUTION

LOCATION: RICKENBACKER AFB 1979
DATE: 1-22-79
PARAMETER: 24-HOUR EIN, LB/MMBTU

PARAMETER RANGE	OCCURRENCE FREQUENCY	PERCENTAGE	HISTOGRAM
4.400 - 4.910	0.	0.	
4.400 - 5.420	1.	3.	**
4.400 - 5.930	7.	23.	**********
4.400 - 6.440	23.	77.	**********
4.400 - 6.950	30.	100.	**********
4.400 - 7.460	30.	100.	**********
4.400 - 7.970	30.	100.	**********
4.400 - 8.480	30.	100.	**********
4.400 - 8.990	30.	100.	**********
4.400 - 9.500	30.	100.	**********

BEYOND MIN/MAX RANGE 0.
TOTAL POPULATION 30.

FREQUENCY DISTRIBUTION

LOCATION: RICKENBACKER AFB 1979
STARTING DATE: 1-22-79
PARAMETER: 24-HOUR LOG EIN

PARAMETER RANGE	OCCURRENCE FREQUENCY	OCCURRENCE PERCENTAGE	HISTOGRAM
.640 - .674	0.	0.	
.674 - .708	0.	0.	
.708 - .742	2.	7.	***
.742 - .776	5.	17.	********
.776 - .810	16.	53.	**********
.810 - .844	7.	23.	**********
.844 - .878	0.	0.	
.878 - .912	0.	0.	
.912 - .946	0.	0.	
.946 - .980	0.	0.	

BEYOND MIN/MAX RANGE 0.
TOTAL POPULATION 30.

CUMULATIVE DISTRIBUTION

LOCATION: RICKENBACKER AFB 1979
DATE: 1-22-79
PARAMETER: 24-HOUR LOG EIN

PARAMETER RANGE	OCCURRENCE FREQUENCY	OCCURRENCE PERCENTAGE	HISTOGRAM
.640 - .674	0.	0.	
.640 - .708	0.	0.	
.640 - .742	2.	7.	***
.640 - .776	7.	23.	**********
.640 - .810	23.	77.	**********
.640 - .844	30.	100.	**********
.640 - .878	30.	100.	**********
.640 - .912	30.	100.	**********
.640 - .946	30.	100.	**********
.640 - .980	30.	100.	**********

BEYOND MIN/MAX RANGE 0.
TOTAL POPULATION 30.

FREQUENCY DISTRIBUTION

LOCATION: RICKENBACKER AFB 1979
STARTING DATE: 1-22-79
PARAMETER: 24-HOUR EOUT, LB/MMBTU

PARAMETER RANGE	OCCURRENCE FREQUENCY	OCCURRENCE PERCENTAGE	HISTOGRAM
.400 - .870	0.	0.	
.870 - 1.340	0.	0.	
1.340 - 1.810	2.	8.	****
1.810 - 2.280	7.	27.	**********
2.280 - 2.750	9.	35.	**********
2.750 - 3.220	5.	19.	**********
3.220 - 3.690	3.	12.	******
3.690 - 4.160	0.	0.	
4.160 - 4.630	0.	0.	
4.630 - 5.100	0.	0.	

BEYOND MIN/MAX RANGE 0.
TOTAL POPULATION 26.

CUMULATIVE DISTRIBUTION

LOCATION: RICKENBACKER AFB 1979
DATE: 1-22-79
PARAMETER: 24-HOUR EOUT, LB/MMBTU

PARAMETER RANGE	OCCURRENCE FREQUENCY	OCCURRENCE PERCENTAGE	HISTOGRAM
.400 - .870	0.	0.	
.400 - 1.340	0.	0.	
.400 - 1.810	2.	8.	****
.400 - 2.280	9.	35.	**********
.400 - 2.750	18.	69.	**********
.400 - 3.220	23.	88.	**********
.400 - 3.690	26.	100.	**********
.400 - 4.160	26.	100.	**********
.400 - 4.630	26.	100.	**********
.400 - 5.100	26.	100.	**********

BEYOND MIN/MAX RANGE 0.
TOTAL POPULATION 26.

FREQUENCY DISTRIBUTION

LOCATION: RICKENBACKER AFB 1979
STARTING DATE: 1-22-79
PARAMETER: 24-HOUR LOG EOUT

PARAMETER RANGE	OCCURRENCE FREQUENCY	OCCURRENCE PERCENTAGE	HISTOGRAM
-.400 - -.289	0.	0.	
-.289 - -.178	0.	0.	
-.178 - -.067	0.	0.	
-.067 - .044	0.	0.	
.044 - .155	0.	0.	
.155 - .266	2.	8.	****
.266 - .377	7.	27.	**********
.377 - .488	11.	42.	**********
.488 - .599	6.	23.	**********
.599 - .710	0.	0.	

BEYOND MIN/MAX RANGE 0.
TOTAL POPULATION 26.

CUMULATIVE DISTRIBUTION

LOCATION: RICKENBACKER AFB 1979
DATE: 1-22-79
PARAMETER: 24-HOUR LOG EOUT

PARAMETER RANGE	OCCURRENCE FREQUENCY	OCCURRENCE PERCENTAGE	HISTOGRAM
-.400 - -.289	0.	0.	
-.400 - -.178	0.	0.	
-.400 - -.067	0.	0.	
-.400 - .044	0.	0.	
-.400 - .155	0.	0.	
-.400 - .266	2.	8.	****
-.400 - .377	9.	35.	**********
-.400 - .488	20.	77.	**********
-.400 - .599	26.	100.	**********
-.400 - .710	26.	100.	**********

BEYOND MIN/MAX RANGE 0.
TOTAL POPULATION 26.

FREQUENCY DISTRIBUTION

LOCATION: RICKENBACKER AFB 1979
STARTING DATE: 1-22-79
PARAMETER: 24-HOUR % EFFICIENCY

PARAMETER RANGE	OCCURRENCE FREQUENCY	OCCURRENCE PERCENTAGE	HISTOGRAM
25.000 - 32.000	0.	0.	
32.000 - 39.000	0.	0.	
39.000 - 46.000	0.	0.	
46.000 - 53.000	7.	27.	**********
53.000 - 60.000	8.	31.	**********
60.000 - 67.000	4.	15.	********
67.000 - 74.000	7.	27.	**********
74.000 - 81.000	0.	0.	
81.000 - 88.000	0.	0.	
88.000 - 95.000	0.	0.	
BEYOND MIN/MAX RANGE	0.		
TOTAL POPULATION	26.		

CUMULATIVE DISTRIBUTION

LOCATION: RICKENBACKER AFB 1979
DATE: 1-22-79
PARAMETER: 24-HOUR % EFFICIENCY

PARAMETER RANGE	OCCURRENCE FREQUENCY	OCCURRENCE PERCENTAGE	HISTOGRAM
25.000 - 32.000	0.	0.	
25.000 - 39.000	0.	0.	
25.000 - 46.000	0.	0.	
25.000 - 53.000	7.	27.	**********
25.000 - 60.000	15.	58.	**********
25.000 - 67.000	19.	73.	**********
25.000 - 74.000	26.	100.	**********
25.000 - 81.000	26.	100.	**********
25.000 - 88.000	26.	100.	**********
25.000 - 95.000	26.	100.	**********
BEYOND MIN/MAX RANGE	0.		
TOTAL POPULATION	26.		

FREQUENCY DISTRIBUTION

LOCATION: RICKENBACKER AFB 1979
STARTING DATE: 1-22-79
PARAMETER: 24-HOUR LOG(% EFFICIENCY)

PARAMETER RANGE	OCCURRENCE FREQUENCY	OCCURRENCE PERCENTAGE	HISTOGRAM
1.400 - 1.458	0.	0.	
1.458 - 1.516	0.	0.	
1.516 - 1.574	0.	0.	
1.574 - 1.632	0.	0.	
1.632 - 1.690	5.	19.	**********
1.690 - 1.748	5.	19.	**********
1.748 - 1.806	7.	27.	**********
1.806 - 1.864	9.	35.	**********
1.864 - 1.922	0.	0.	
1.922 - 1.980	0.	0.	

BEYOND MIN/MAX RANGE 0.
TOTAL POPULATION 26.

CUMULATIVE DISTRIBUTION

LOCATION: RICKENBACKER AFB 1979
DATE: 1-22-79
PARAMETER: 24-HOUR LOG(% EFFICIENCY)

PARAMETER RANGE	OCCURRENCE FREQUENCY	OCCURRENCE PERCENTAGE	HISTOGRAM
1.400 - 1.458	0.	0.	
1.400 - 1.516	0.	0.	
1.400 - 1.574	0.	0.	
1.400 - 1.632	0.	0.	
1.400 - 1.690	5.	19.	**********
1.400 - 1.748	10.	38.	**********
1.400 - 1.806	17.	65.	**********
1.400 - 1.864	26.	100.	**********
1.400 - 1.922	26.	100.	**********
1.400 - 1.980	26.	100.	**********

BEYOND MIN/MAX RANGE 0.
TOTAL POPULATION 26.

FREQUENCY DISTRIBUTION

LOCATION: RICKENBACKER AFB 1979
STARTING DATE: 1-22-79
PARAMETER: 24-HOUR 100-% EFFICIENCY

PARAMETER RANGE	OCCURRENCE FREQUENCY	OCCURRENCE PERCENTAGE	HISTOGRAM
15.000 - 21.000	0.	0.	
21.000 - 27.000	0.	0.	
27.000 - 33.000	7.	27.	**********
33.000 - 39.000	3.	12.	******
39.000 - 45.000	6.	23.	**********
45.000 - 51.000	5.	19.	**********
51.000 - 57.000	5.	19.	**********
57.000 - 63.000	0.	0.	
63.000 - 69.000	0.	0.	
69.000 - 75.000	0.	0.	

BEYOND MIN/MAX RANGE 0.
TOTAL POPULATION 26.

CUMULATIVE DISTRIBUTION

LOCATION: RICKENBACKER AFB 1979
DATE: 1-22-79
PARAMETER: 24-HOUR 100-% EFFICIENCY

PARAMETER RANGE	OCCURRENCE FREQUENCY	OCCURRENCE PERCENTAGE	HISTOGRAM
15.000 - 21.000	0.	0.	
15.000 - 27.000	0.	0.	
15.000 - 33.000	7.	27.	**********
15.000 - 39.000	10.	38.	**********
15.000 - 45.000	16.	62.	**********
15.000 - 51.000	21.	81.	**********
15.000 - 57.000	26.	100.	**********
15.000 - 63.000	26.	100.	**********
15.000 - 69.000	26.	100.	**********
15.000 - 75.000	26.	100.	**********

BEYOND MIN/MAX RANGE 0.
TOTAL POPULATION 26.

FREQUENCY DISTRIBUTION

LOCATION: RICKENBACKER AFB 1979
STARTING DATE: 1-22-79
PARAMETER: 24-HOUR LOG(100-% EFFICIENCY)

PARAMETER RANGE	OCCURRENCE FREQUENCY	PERCENTAGE	HISTOGRAM
.700 - .820	0.	0.	
.820 - .940	0.	0.	
.940 - 1.060	0.	0.	
1.060 - 1.180	0.	0.	
1.180 - 1.300	0.	0.	
1.300 - 1.420	0.	0.	
1.420 - 1.540	8.	31.	**********
1.540 - 1.660	9.	35.	**********
1.660 - 1.780	9.	35.	**********
1.780 - 1.900	0.	0.	

BEYOND MIN/MAX RANGE 0.
TOTAL POPULATION 26.

CUMULATIVE DISTRIBUTION

LOCATION: RICKENBACKER AFB 1979
DATE: 1-22-79
PARAMETER: 24-HOUR LOG(100-% EFFICIENCY)

PARAMETER RANGE	OCCURRENCE FREQUENCY	PERCENTAGE	HISTOGRAM
.700 - .820	0.	0.	
.700 - .940	0.	0.	
.700 - 1.060	0.	0.	
.700 - 1.180	0.	0.	
.700 - 1.300	0.	0.	
.700 - 1.420	0.	0.	
.700 - 1.540	8.	31.	**********
.700 - 1.660	17.	65.	**********
.700 - 1.780	26.	100.	**********
.700 - 1.900	26.	100.	**********

BEYOND MIN/MAX RANGE 0.
TOTAL POPULATION 26.

DAILY SUMMARY OF RESULTS

LOCATION: RICKENBACKER AFB 1979
DATE: 3- 8-79

TIME	LOAD	E IN	E OUT	EFF
0	0.	6.293	1.095	82.6
100	0.	6.127	1.160	81.1
200	0.	6.313	1.090	82.7
300	0.	6.319	.991	84.3
400	0.	6.263	######	#####
500	0.	6.123	######	#####
600	0.	6.156	######	#####
700	0.	6.130	######	#####
800	0.	6.257	######	#####
900	0.	6.596	######	#####
1000	0.	6.288	######	#####
1100	0.	6.360	######	#####
1200	0.	7.195	######	#####
1300	0.	7.210	######	#####
1400	0.	6.803	######	#####
1500	0.	6.940	######	#####
1600	0.	7.329	######	#####
1700	0.	6.904	######	#####
1800	0.	6.719	######	#####
1900	0.	6.579	######	#####
2000	0.	6.880	######	#####
2100	0.	6.748	######	#####
2200	0.	7.205	######	#####
2300	0.	7.285	######	#####
# AVERAGES	24.	24.	4.	4.
% OF DATA	100.	100.	17.	17.
MINIMUM	0.	6.123	.991	81.073
MAXIMUM	0.	7.329	1.160	84.318
MEAN	0.	6.626	######	######
STD.DEV.	0.	.414	######	######
% STD.DEV.	#####	6.255	######	######

24-HOUR REMOVAL EFICIENCY USING

$[MEAN]_1^1$ E_{IN} , E_{OUT} : ######%

NOTE: $[MEAN]_X^Y$ IS DEFINED AS:

THE MEAN FOR X DAYS USING Y-HOUR AVERAGES

DAILY SUMMARY OF RESULTS

LOCATION: RICKENBACKER AFB 1979
DATE: 3- 9-79

TIME	LOAD	E IN	E OUT	EFF
0	0.	6.816	######	#####
100	0.	7.056	######	#####
200	0.	7.389	######	#####
300	0.	6.862	######	#####
400	0.	6.881	######	#####
500	0.	6.645	######	#####
600	0.	6.888	######	#####
700	0.	6.875	######	#####
800	0.	7.067	######	#####
900	0.	7.167	######	#####
1000	0.	7.037	######	#####
1100	0.	6.857	######	#####
1200	0.	6.568	######	#####
1300	0.	6.534	######	#####
1400	0.	6.615	######	#####
1500	0.	6.539	######	#####
1600	0.	6.623	######	#####
1700	0.	6.732	######	#####
1800	0.	6.590	######	#####
1900	0.	6.667	######	#####
2000	0.	6.636	######	#####
2100	0.	6.737	######	#####
2200	0.	6.852	######	#####
2300	0.	6.943	######	#####
# AVERAGES	24.	24.	0.	0.
% OF DATA	100.	100.	0.	0.
MINIMUM	0.	6.534	######	######
MAXIMUM	0.	7.389	.000	.000
MEAN	0.	6.816	######	######
STD.DEV.	0.	.219	######	######
% STD.DEV.	#####	3.207	######	######

24-HOUR REMOVAL EFICIENCY USING

$$[\text{MEAN}]_1 \; E_{IN}, E_{OUT} : \#\#\#\#\#\#\%$$

NOTE: $[\text{MEAN}]^{Y}_{X}$ IS DEFINED AS:

THE MEAN FOR X DAYS USING Y-HOUR AVERAGES

DAILY SUMMARY OF RESULTS

LOCATION: RICKENBACKER AFB 1979
DATE: 3-10-79

TIME	LOAD	E IN	E OUT	EFF
0	0.	7.015	######	#####
100	0.	7.075	######	#####
200	0.	6.949	######	#####
300	0.	6.903	######	#####
400	0.	6.883	######	#####
500	0.	6.895	######	#####
600	0.	6.844	######	#####
700	0.	6.994	######	#####
800	0.	6.890	######	#####
900	0.	7.084	######	#####
1000	0.	######	######	#####
1100	0.	6.994	######	#####
1200	0.	6.558	######	#####
1300	0.	6.388	######	#####
1400	0.	6.568	######	#####
1500	0.	6.482	######	#####
1600	0.	6.226	2.352	62.2
1700	0.	6.317	2.298	63.6
1800	0.	7.512	2.299	69.4
1900	0.	6.126	2.027	66.9
2000	0.	6.162	1.910	69.0
2100	0.	6.325	1.912	69.8
2200	0.	6.449	2.111	67.3
2300	0.	6.395	2.154	66.3
# AVERAGES	25.	24.	8.	8.
% OF DATA	104.	100.	33.	33.
MINIMUM	0.	6.126	1.910	62.226
MAXIMUM	0.	7.512	2.352	69.776
MEAN	0.	6.717	######	######
STD.DEV.	0.	.369	######	######
% STD.DEV.	#####	5.495	######	######

24-HOUR REMOVAL EFICIENCY USING

$[MEAN]_1^1$ E_{IN} , E_{OUT} : #######%

NOTE: $[MEAN]_X^Y$ IS DEFINED AS:

THE MEAN FOR X DAYS USING Y-HOUR AVERAGES

DAILY SUMMARY OF RESULTS

LOCATION: RICKENBACKER AFB 1979
DATE: 3-11-79

TIME	LOAD	E IN	E OUT	EFF
0	0.	6.401	2.127	66.8
100	0.	6.366	2.211	65.3
200	0.	6.459	2.206	65.9
300	0.	6.451	2.163	66.5
400	0.	6.532	2.226	65.9
500	0.	6.412	2.158	66.4
600	0.	6.402	2.101	67.2
700	0.	6.415	2.184	65.9
800	0.	6.359	2.124	66.6
900	0.	6.537	2.186	66.6
1000	0.	6.963	2.407	65.4
1100	0.	6.800	2.364	65.2
1200	0.	6.415	2.229	65.2
1300	0.	11.287	2.280	79.8
1400	0.	6.841	2.430	64.5
1500	0.	6.742	2.624	61.1
1600	0.	6.634	2.455	63.0
1700	0.	6.366	2.070	67.5
1800	0.	6.471	2.075	67.9
1900	0.	6.572	2.106	68.0
2000	0.	6.368	2.121	66.7
2100	0.	6.340	1.719	72.9
2200	0.	6.173	1.738	71.8
2300	0.	6.125	1.919	68.7
# AVERAGES	24.	24.	24.	24.
% OF DATA	100.	100.	100.	100.
MINIMUM	0.	6.125	1.719	61.078
MAXIMUM	0.	11.287	2.624	79.796
MEAN	0.	6.685	2.176	67.113
STD.DEV.	0.	1.000	.204	3.613
% STD.DEV.	#####	14.958	9.382	5.384

24-HOUR REMOVAL EFICIENCY USING

$[MEAN]_1 \; E_{IN} \, , \, E_{OUT}$: 67.450%

NOTE: $[MEAN]^{Y}_{X}$ IS DEFINED AS:

THE MEAN FOR X DAYS USING Y-HOUR AVERAGES

DAILY SUMMARY OF RESULTS

LOCATION: RICKENBACKER AFB 1979
DATE: 3-12-79

TIME	LOAD	E IN	E OUT	EFF
0	0.	6.971	2.013	71.1
100	0.	6.297	1.892	70.0
200	0.	6.273	1.569	75.0
300	0.	6.282	######	#####
400	0.	6.690	######	#####
500	0.	7.359	######	#####
600	0.	7.583	######	#####
700	0.	7.128	######	#####
800	0.	6.800	######	#####
900	0.	6.971	######	#####
1000	0.	5.714	######	#####
1100	0.	6.536	######	#####
1200	0.	6.767	######	#####
1300	0.	7.408	######	#####
1400	0.	######	######	#####
1500	0.	######	######	#####
1600	0.	######	######	#####
1700	0.	5.953	1.561	73.8
1800	0.	6.797	1.920	71.8
1900	0.	7.372	2.117	71.3
2000	0.	7.959	1.988	75.0
2100	0.	6.288	1.682	73.3
2200	0.	6.458	1.824	71.7
2300	0.	8.798	2.480	71.8
# AVERAGES	24.	21.	10.	10.
% OF DATA	100.	88.	42.	42.
MINIMUM	0.	5.714	1.561	69.951
MAXIMUM	0.	8.798	2.480	75.021
MEAN	0.	6.876	######	######
STD.DEV.	0.	.713	######	######
% STD.DEV.	#####	10.364	######	######

24-HOUR REMOVAL EFICIENCY USING

$$[MEAN]_{1}^{1} \; E_{IN}, E_{OUT} : \#\#\#\#\#\#\%$$

NOTE: $[MEAN]_{X}^{Y}$ IS DEFINED AS:

THE MEAN FOR X DAYS USING Y-HOUR AVERAGES

DAILY SUMMARY OF RESULTS

LOCATION: RICKENBACKER AFB 1979
DATE: 3-13-79

TIME	LOAD	E IN	E OUT	EFF
0	0.	6.926	1.795	74.1
100	0.	6.401	1.512	76.4
200	0.	6.896	1.915	72.2
300	0.	7.758	2.307	70.3
400	0.	7.193	2.000	72.2
500	0.	6.951	1.802	74.1
600	0.	6.680	1.679	74.9
700	0.	7.450	2.046	72.5
800	0.	6.927	1.774	74.4
900	0.	6.391	1.626	74.6
1000	0.	6.796	1.388	79.6
1100	0.	7.590	.864	88.6
1200	0.	7.584	.656	91.3
1300	0.	7.501	.779	89.6
1400	0.	7.098	1.743	75.4
1500	0.	7.331	1.915	73.9
1600	0.	######	1.898	#####
1700	0.	######	1.810	#####
1800	0.	######	1.819	#####
1900	0.	######	1.711	#####
2000	0.	######	1.677	#####
2100	0.	######	1.558	#####
2200	0.	######	1.494	#####
2300	0.	######	1.415	#####
# AVERAGES	24.	16.	24.	16.
% OF DATA	100.	67.	100.	67.
MINIMUM	0.	6.391	.656	70.268
MAXIMUM	0.	7.758	2.307	91.344
MEAN	0.	######	1.633	######
STD.DEV.	0.	######	.394	######
% STD.DEV.	#####	######	24.141	######

24-HOUR REMOVAL EFICIENCY USING

$[\text{MEAN}]^{1}_{1}$ E IN , E OUT : ######%

NOTE: $[\text{MEAN}]^{Y}_{X}$ IS DEFINED AS:

THE MEAN FOR X DAYS USING Y-HOUR AVERAGES

DAILY SUMMARY OF RESULTS

LOCATION: RICKENBACKER AFB 1979
DATE: 3-14-79

TIME	LOAD	E IN	E OUT	EFF
0	0.	######	1.623	#####
100	0.	######	1.945	#####
200	0.	######	1.951	#####
300	0.	######	1.919	#####
400	0.	######	1.897	#####
500	0.	######	2.057	#####
600	0.	######	1.983	#####
700	0.	######	2.097	#####
800	0.	######	######	#####
900	0.	######	######	#####
1000	0.	6.401	1.921	70.0
1100	0.	6.237	2.034	67.4
1200	0.	6.296	2.142	66.0
1300	0.	6.528	2.060	68.4
1400	0.	6.417	1.963	69.4
1500	0.	6.409	1.960	69.4
1600	0.	6.771	1.766	73.9
1700	0.	7.018	2.146	69.4
1800	0.	7.069	2.301	67.4
1900	0.	7.032	2.230	68.3
2000	0.	7.162	2.155	69.9
2100	0.	7.084	2.145	69.7
2200	0.	7.035	2.213	68.5
2300	0.	6.828	2.263	66.9
# AVERAGES	24.	14.	22.	14.
% OF DATA	100.	58.	92.	58.
MINIMUM	0.	6.237	1.683	65.971
MAXIMUM	0.	7.162	2.301	73.924
MEAN	0.	######	2.035	######
STD.DEV.	0.	######	.164	######
% STD.DEV.	#####	######	8.054	######

24-HOUR REMOVAL EFICIENCY USING

$$[MEAN]_1^1 \; E_{IN}, E_{OUT} : \#\#\#\#\#\#\%$$

NOTE: $[MEAN]_X^Y$ IS DEFINED AS:

THE MEAN FOR X DAYS USING Y-HOUR AVERAGES

DAILY SUMMARY OF RESULTS

LOCATION: RICKENBACKER AFB 1979
DATE: 3-15-79

TIME	LOAD	E IN	E OUT	EFF
0	0.	6.760	2.266	66.5
100	0.	6.679	2.218	66.8
200	0.	6.531	2.246	65.6
300	0.	6.882	2.138	68.9
400	0.	6.624	2.093	68.4
500	0.	6.617	2.103	68.2
600	0.	6.676	2.111	68.4
700	0.	6.740	2.161	67.9
800	0.	6.895	2.174	68.5
900	0.	6.915	2.230	67.7
1000	0.	6.710	2.184	67.4
1100	0.	6.686	2.125	68.2
1200	0.	6.564	2.075	68.4
1300	0.	6.601	1.944	70.6
1400	0.	6.382	1.517	76.2
1500	0.	7.556	.567	92.5
1600	0.	7.837	.628	92.0
1700	0.	8.078	.622	92.3
1800	0.	8.250	.554	93.3
1900	0.	8.682	.588	93.2
2000	0.	8.589	.550	93.6
2100	0.	8.463	.642	92.4
2200	0.	8.506	.576	93.2
2300	0.	9.071	.512	94.4
# AVERAGES	24.	24.	24.	24.
% OF DATA	100.	100.	100.	100.
MINIMUM	0.	6.382	.512	65.615
MAXIMUM	0.	9.071	2.266	94.359
MEAN	0.	7.304	1.534	77.696
STD.DEV.	0.	.869	.767	12.254
% STD.DEV.	#####	11.893	49.999	15.772

24-HOUR REMOVAL EFICIENCY USING

$[MEAN]_1^1 \; E_{IN}, E_{OUT}$: 78.993%

NOTE: $[MEAN]_X^Y$ IS DEFINED AS:

THE MEAN FOR X DAYS USING Y-HOUR AVERAGES

DAILY SUMMARY OF RESULTS

LOCATION: RICKENBACKER AFB 1979
DATE: 3-16-79

TIME	LOAD	E IN	E OUT	EFF
0	0.	9.169	.488	94.7
100	0.	9.247	.484	94.8
200	0.	9.547	.449	95.3
300	0.	9.499	.482	94.9
400	0.	9.717	.483	95.0
500	0.	10.009	.413	95.9
600	0.	11.037	.426	96.1
700	0.	10.829	.429	96.0
800	0.	9.459	.611	93.5
900	0.	8.036	1.846	77.0
1000	0.	6.858	1.696	75.3
1100	0.	7.190	1.726	76.0
1200	0.	7.052	1.783	74.7
1300	0.	6.921	1.756	74.6
1400	0.	7.096	1.829	74.2
1500	0.	7.482	1.747	76.6
1600	0.	7.304	1.943	73.4
1700	0.	7.225	1.852	74.4
1800	0.	7.053	1.730	75.5
1900	0.	6.883	1.740	74.7
2000	0.	6.944	1.706	75.4
2100	0.	7.128	1.722	75.8
2200	0.	7.651	1.675	78.1
2300	0.	7.785	1.836	76.4
# AVERAGES	24.	24.	24.	24.
% OF DATA	100.	100.	100.	100.
MINIMUM	0.	6.858	.413	73.397
MAXIMUM	0.	11.037	1.943	96.140
MEAN	0.	8.213	1.286	82.856
STD.DEV.	0.	1.370	.646	9.781
% STD.DEV.	#####	16.685	50.234	11.805

24-HOUR REMOVAL EFICIENCY USING

$\{MEAN\}_1^{E_{IN}, E_{OUT}}$: 84.348%

NOTE: $\{MEAN\}_X^Y$ IS DEFINED AS:

THE MEAN FOR X DAYS USING Y-HOUR AVERAGES

DAILY SUMMARY OF RESULTS

LOCATION: RICKENBACKER AFB 1979
DATE: 3-17-79

TIME	LOAD	E IN	E OUT	EFF
0	0.	7.333	2.015	72.5
100	0.	7.707	2.239	70.9
200	0.	8.211	2.241	72.7
300	0.	8.242	2.085	74.7
400	0.	8.263	1.715	79.2
500	0.	8.200	1.454	82.3
600	0.	7.846	1.364	82.6
700	0.	7.940	1.472	81.5
800	0.	7.800	1.822	76.6
900	0.	7.321	1.763	75.9
1000	0.	7.481	1.547	79.3
1100	0.	7.296	1.601	78.1
1200	0.	7.179	1.517	78.9
1300	0.	7.500	1.353	82.0
1400	0.	7.313	1.373	81.2
1500	0.	7.314	1.415	80.7
1600	0.	7.422	1.363	81.6
1700	0.	7.951	1.185	85.1
1800	0.	7.585	1.269	83.3
1900	0.	7.637	1.155	84.9
2000	0.	7.459	1.200	83.9
2100	0.	7.542	1.360	82.0
2200	0.	7.639	1.467	80.8
2300	0.	7.777	1.489	80.8
# AVERAGES	24.	24.	24.	24.
% OF DATA	100.	100.	100.	100.
MINIMUM	0.	7.179	1.155	70.944
MAXIMUM	0.	8.263	2.241	85.101
MEAN	0.	7.665	1.561	79.647
STD.DEV.	0.	.332	.317	3.922
% STD.DEV.	#####	4.329	20.317	4.924

24-HOUR REMOVAL EFICIENCY USING

$[MEAN]_1^{E_{IN}, E_{OUT}}$: 79.635%

NOTE: $[MEAN]_X^Y$ IS DEFINED AS:

THE MEAN FOR X DAYS USING Y-HOUR AVERAGES

DAILY SUMMARY OF RESULTS

LOCATION: RICKENBACKER AFB 1979
DATE: 3-18-79

TIME	LOAD	E IN	E OUT	EFF
0	0.	7.865	1.537	80.5
100	0.	8.133	1.652	79.7
200	0.	7.944	1.760	77.8
300	0.	8.154	1.871	77.1
400	0.	8.398	1.871	77.7
500	0.	8.514	1.825	78.6
600	0.	7.938	1.854	76.6
700	0.	8.026	1.751	78.2
800	0.	7.942	1.721	78.3
900	0.	7.954	1.855	76.7
1000	0.	7.869	1.702	78.4
1100	0.	7.552	1.830	75.8
1200	0.	7.664	1.811	76.4
1300	0.	7.348	1.855	74.7
1400	0.	7.603	1.786	76.5
1500	0.	7.838	1.682	78.5
1600	0.	7.952	1.640	79.4
1700	0.	6.893	1.577	77.1
1800	0.	6.477	1.605	75.2
1900	0.	7.159	2.052	71.3
2000	0.	7.757	2.018	74.0
2100	0.	7.223	1.880	74.0
2200	0.	7.600	1.856	75.6
2300	0.	7.867	2.036	74.1
# AVERAGES	24.	24.	24.	24.
% OF DATA	100.	100.	100.	100.
MINIMUM	0.	6.477	1.537	71.338
MAXIMUM	0.	8.514	2.052	80.457
MEAN	0.	7.736	1.793	76.757
STD.DEV.	0.	.460	.137	2.144
% STD.DEV.	#####	5.943	7.662	2.794

24-HOUR REMOVAL EFICIENCY USING

$[MEAN]_1^1$ E_{IN} , E_{OUT} : 76.825%

NOTE: $[MEAN]_X^Y$ IS DEFINED AS:

THE MEAN FOR X DAYS USING Y-HOUR AVERAGES

DAILY SUMMARY OF RESULTS

LOCATION: RICKENBACKER AFB 1979
DATE: 3-19-79

TIME	LOAD	E IN	E OUT	EFF
0	0.	7.753	1.711	77.9
100	0.	7.904	1.629	79.4
200	0.	7.565	1.527	79.8
300	0.	7.177	1.594	77.8
400	0.	7.475	1.641	78.0
500	0.	7.249	1.527	78.9
600	0.	7.288	1.420	80.5
700	0.	7.130	1.366	80.8
800	0.	7.384	1.486	79.9
900	0.	7.333	1.818	75.2
1000	0.	7.299	1.472	79.8
1100	0.	7.308	1.857	74.6
1200	0.	7.683	1.742	77.3
1300	0.	7.691	1.806	76.5
1400	0.	7.677	1.633	78.7
1500	0.	7.824	1.471	81.2
1600	0.	7.609	1.416	81.4
1700	0.	7.467	1.542	79.3
1800	0.	7.397	1.393	81.2
1900	0.	7.523	1.387	81.6
2000	0.	7.810	1.491	80.9
2100	0.	7.573	1.414	81.3
2200	0.	7.641	1.399	81.7
2300	0.	7.807	1.402	82.0
# AVERAGES	24.	24.	24.	24.
% OF DATA	100.	100.	100.	100.
MINIMUM	0.	7.130	1.366	74.595
MAXIMUM	0.	7.904	1.857	82.044
MEAN	0.	7.524	1.548	79.417
STD.DEV.	0.	.222	.151	2.060
% STD.DEV.	#####	2.950	9.731	2.593

24-HOUR REMOVAL EFICIENCY USING

$(MEAN)_1$ E_{IN} , E_{OUT} : 79.430%

NOTE: $(MEAN)_X^Y$ IS DEFINED AS:

THE MEAN FOR X DAYS USING Y-HOUR AVERAGES

DAILY SUMMARY OF RESULTS

LOCATION: RICKENBACKER AFB 1979
DATE: 3-20-79

TIME	LOAD	E IN	E OUT	EFF
0	0.	8.161	1.528	81.3
100	0.	7.915	1.521	80.8
200	0.	7.947	1.467	81.5
300	0.	8.105	1.451	82.1
400	0.	7.980	1.592	80.1
500	0.	7.808	1.663	78.7
600	0.	7.681	1.596	79.2
700	0.	7.830	1.578	79.8
800	0.	7.901	1.676	78.8
900	0.	7.707	1.659	78.5
1000	0.	8.298	2.124	74.4
1100	0.	7.079	2.100	70.3
1200	0.	7.346	1.474	79.9
1300	0.	8.231	1.471	82.1
1400	0.	7.755	1.556	79.9
1500	0.	8.338	1.697	79.6
1600	0.	8.420	2.182	74.1
1700	0.	8.094	1.811	77.6
1800	0.	7.761	1.686	78.3
1900	0.	8.895	1.737	80.5
2000	0.	7.938	1.477	81.4
2100	0.	7.514	1.537	79.5
2200	0.	7.768	1.569	79.8
2300	0.	7.761	1.475	81.0
# AVERAGES	24.	24.	24.	24.
% OF DATA	100.	100.	100.	100.
MINIMUM	0.	7.079	1.451	70.326
MAXIMUM	0.	8.895	2.182	82.130
MEAN	0.	7.926	1.651	79.139
STD.DEV.	0.	.371	.210	2.749
% STD.DEV.	#####	4.682	12.730	3.474

24-HOUR REMOVAL EFICIENCY USING

$$[\text{MEAN}]_1^1 \; E_{IN}, E_{OUT} : 79.168\%$$

NOTE: $[\text{MEAN}]_X^Y$ IS DEFINED AS:

THE MEAN FOR X DAYS USING Y-HOUR AVERAGES

DAILY SUMMARY OF RESULTS

LOCATION: RICKENBACKER AFB 1979
DATE: 3-21-79

TIME	LOAD	E IN	E OUT	EFF
0	0.	7.961	1.515	81.0
100	0.	7.410	1.650	77.7
200	0.	7.917	1.804	77.2
300	0.	7.678	1.663	78.3
400	0.	7.891	1.777	77.5
500	0.	7.544	1.801	76.1
600	0.	7.837	1.839	76.5
700	0.	8.174	1.871	77.1
800	0.	8.087	1.746	78.4
900	0.	7.856	1.927	75.5
1000	0.	7.930	1.723	78.3
1100	0.	7.985	1.523	80.9
1200	0.	7.484	1.389	81.4
1300	0.	7.854	1.242	84.2
1400	0.	7.682	1.221	84.1
1500	0.	7.691	1.207	84.3
1600	0.	7.806	1.098	85.9
1700	0.	7.803	1.161	85.1
1800	0.	7.938	1.149	85.5
1900	0.	8.025	1.196	85.1
2000	0.	8.667	1.151	86.7
2100	0.	7.926	1.313	83.4
2200	0.	7.630	1.333	82.5
2300	0.	7.817	1.531	80.4
# AVERAGES	24.	24.	24.	24.
% OF DATA	100.	100.	100.	100.
MINIMUM	0.	7.410	1.098	75.473
MAXIMUM	0.	8.667	1.927	86.718
MEAN	0.	7.858	1.493	80.975
STD.DEV.	0.	.253	.278	3.605
% STD.DEV.	#####	3.220	18.604	4.451

24-HOUR REMOVAL EFICIENCY USING

$[MEAN]^{1}_{1}$ E_{IN} , E_{OUT} : 81.002%

NOTE: $[MEAN]^{Y}_{X}$ IS DEFINED AS:

THE MEAN FOR X DAYS USING Y-HOUR AVERAGES

DAILY SUMMARY OF RESULTS

LOCATION: RICKENBACKER AFB 1979
DATE: 3-22-79

TIME	LOAD	E IN	E OUT	EFF
0	0.	7.109	1.408	80.2
100	0.	7.138	1.324	81.5
200	0.	7.273	1.367	81.2
300	0.	7.297	1.284	82.4
400	0.	7.311	1.271	82.6
500	0.	7.524	1.297	82.8
600	0.	7.457	1.300	82.6
700	0.	7.334	1.348	81.6
800	0.	7.596	1.252	83.5
900	0.	7.371	######	#####
1000	0.	7.037	1.659	76.4
1100	0.	7.112	1.402	80.3
1200	0.	7.410	1.141	84.6
1300	0.	7.559	1.214	83.9
1400	0.	7.607	1.342	82.4
1500	0.	8.285	1.386	83.3
1600	0.	8.298	1.385	83.3
1700	0.	8.208	1.573	80.8
1800	0.	7.993	1.488	81.4
1900	0.	8.087	1.692	79.1
2000	0.	8.030	1.855	76.9
2100	0.	8.217	1.598	80.6
2200	0.	8.043	1.489	81.5
2300	0.	7.769	1.581	79.7
# AVERAGES	24.	24.	23.	23.
% OF DATA	100.	100.	96.	96.
MINIMUM	0.	7.037	1.141	76.427
MAXIMUM	0.	8.298	1.855	84.599
MEAN	0.	7.628	1.420	81.409
STD.DEV.	0.	.415	.173	2.047
% STD.DEV.	#####	5.446	12.155	2.514

24-HOUR REMOVAL EFICIENCY USING

$$[\text{MEAN}]_1 \; E_{IN}, E_{OUT} : 81.386\%$$

NOTE: $[\text{MEAN}]_X^Y$ IS DEFINED AS:

THE MEAN FOR X DAYS USING Y-HOUR AVERAGES

DAILY SUMMARY OF RESULTS

LOCATION: RICKENBACKER AFB 1979
DATE: 3-23-79

TIME	LOAD	E IN	E OUT	EFF
0	0.	7.764	1.700	78.1
100	0.	8.015	1.588	80.2
200	0.	7.908	1.533	80.6
300	0.	7.824	1.517	80.6
400	0.	7.988	1.510	81.1
500	0.	8.182	1.625	80.1
600	0.	8.022	1.825	77.2
700	0.	7.953	2.009	74.7
800	0.	8.040	1.897	76.4
900	0.	8.980	######	#####
1000	0.	8.500	######	#####
1100	0.	6.993	2.251	67.8
1200	0.	7.112	2.409	66.1
1300	0.	7.531	2.263	69.9
1400	0.	7.432	2.105	71.7
1500	0.	7.410	2.207	70.2
1600	0.	8.153	2.173	73.3
1700	0.	7.518	2.035	72.9
1800	0.	7.204	2.051	71.5
1900	0.	6.901	1.754	74.6
2000	0.	7.360	1.825	75.2
2100	0.	7.600	1.679	77.9
2200	0.	6.789	1.834	73.0
2300	0.	7.130	2.191	69.3
# AVERAGES	24.	24.	22.	22.
% OF DATA	100.	100.	92.	92.
MINIMUM	0.	6.789	1.510	66.125
MAXIMUM	0.	8.980	2.409	81.102
MEAN	0.	7.680	1.908	74.666
STD.DEV.	0.	.530	.276	4.486
% STD.DEV.	#####	6.903	14.439	6.008

24-HOUR REMOVAL EFICIENCY USING

$[MEAN]_{1}$ E_{IN} , E_{OUT} : 75.150%

NOTE: $[MEAN]^{Y}_{X}$ IS DEFINED AS:

THE MEAN FOR X DAYS USING Y-HOUR AVERAGES

DAILY SUMMARY OF RESULTS

LOCATION: RICKENBACKER AFB 1999
DATE: 3-24-79

TIME	LOAD	E IN	E OUT	EFF
0	0.	7.101	2.047	71.2
100	0.	6.867	1.659	75.8
200	0.	7.113	1.790	74.8
300	0.	7.284	1.890	74.1
400	0.	7.233	1.736	76.0
500	0.	7.067	1.715	75.7
600	0.	6.617	1.996	69.8
700	0.	6.913	1.965	71.6
800	0.	7.573	2.492	67.1
900	0.	6.929	2.505	63.8
1000	0.	6.783	2.690	60.3
1100	0.	6.800	2.815	58.6
1200	0.	6.738	2.673	60.3
1300	0.	6.923	2.653	61.7
1400	0.	7.004	2.671	61.9
1500	0.	7.047	2.713	61.5
1600	0.	7.195	2.825	60.7
1700	0.	7.438	2.780	62.6
1800	0.	7.092	3.012	57.5
1900	0.	7.047	######	#####
2000	0.	6.846	######	#####
2100	0.	6.665	######	#####
2200	0.	6.781	######	#####
2300	0.	7.049	######	#####
# AVERAGES	24.	24.	19.	19.
% OF DATA	100.	100.	79.	79.
MINIMUM	0.	6.617	1.659	57.530
MAXIMUM	0.	7.573	3.012	75.996
MEAN	0.	7.004	2.349	66.590
STD.DEV.	0.	.234	.460	6.634
% STD.DEV.	#####	3.338	19.575	9.962

24-HOUR REMOVAL EFICIENCY USING

$(MEAN)_1$ E_{IN} , E_{OUT} : 66.467%

NOTE: $(MEAN)^Y_X$ IS DEFINED AS:

THE MEAN FOR X DAYS USING Y-HOUR AVERAGES

DAILY SUMMARY OF RESULTS

LOCATION: RICKENBACKER AFB 1979
DATE: 3-25-79

TIME	LOAD	E IN	E OUT	EFF
0	0.	6.914	######	#####
100	0.	6.868	######	#####
200	0.	6.778	######	#####
300	0.	6.979	######	#####
400	0.	7.038	######	#####
500	0.	6.903	######	#####
600	0.	6.719	######	#####
700	0.	6.919	######	#####
800	0.	6.927	######	#####
900	0.	7.263	######	#####
1000	0.	6.897	######	#####
1100	0.	6.510	######	#####
1200	0.	6.857	######	#####
1300	0.	6.317	######	#####
1400	0.	6.472	######	#####
1500	0.	6.724	######	#####
1600	0.	6.647	######	#####
1700	0.	6.814	######	#####
1800	0.	6.730	######	#####
1900	0.	7.230	######	#####
2000	0.	7.316	######	#####
2100	0.	7.702	######	#####
2200	0.	7.681	######	#####
2300	0.	8.182	######	#####
# AVERAGES	24.	24.	0.	0.
% OF DATA	100.	100.	0.	0.
MINIMUM	0.	6.317	######	######
MAXIMUM	0.	8.182	.000	.000
MEAN	0.	6.974	######	######
STD.DEV.	0.	.420	######	######
% STD.DEV.	#####	6.025	######	######

24-HOUR REMOVAL EFICIENCY USING

$[MEAN]_1^1$ E_{IN} , E_{OUT} : ######%

NOTE: $[MEAN]_X^Y$ IS DEFINED AS:

THE MEAN FOR X DAYS USING Y-HOUR AVERAGES

DAILY SUMMARY OF RESULTS

LOCATION: RICKENBACKER AFB 1979
DATE: 3-26-79

TIME	LOAD	E IN	E OUT	EFF
0	0.	6.533	######	#####
100	0.	6.847	######	#####
200	0.	7.096	######	#####
300	0.	6.815	######	#####
400	0.	6.865	######	#####
500	0.	6.952	######	#####
600	0.	6.611	######	#####
700	0.	6.385	######	#####
800	0.	6.553	######	#####
900	0.	6.083	2.174	64.3
1000	0.	5.881	1.844	68.6
1100	0.	6.058	2.064	65.9
1200	0.	5.735	1.705	70.3
1300	0.	5.758	1.832	68.2
1400	0.	5.806	2.021	65.2
1500	0.	5.883	2.205	62.5
1600	0.	6.445	2.500	61.2
1700	0.	6.108	2.249	63.2
1800	0.	5.986	2.192	63.4
1900	0.	6.556	2.355	64.1
2000	0.	6.297	2.596	58.8
2100	0.	6.330	2.554	59.7
2200	0.	6.215	2.448	60.6
2300	0.	6.111	2.442	60.0
# AVERAGED	24.	24.	15.	15.
% OF DATA	100.	100.	63.	63.
MINIMUM	0.	5.735	1.705	58.769
MAXIMUM	0.	7.096	2.596	70.273
MEAN	0.	6.330	######	######
STD.DEV.	0.	.402	######	######
% STD.DEV.	#####	6.357	######	######

24-HOUR REMOVAL EFICIENCY USING

$$\{MEAN\}_{1}^{1} \; E_{IN} \, , \, E_{OUT} \; : \; \#\#\#\#\#\#\%$$

NOTE: $\{MEAN\}_{X}^{Y}$ IS DEFINED AS:

THE MEAN FOR X DAYS USING Y-HOUR AVERAGES

DAILY SUMMARY OF RESULTS

LOCATION: RICKENBACKER AFB 1979
DATE: 3-27-79

TIME	LOAD	E IN	E OUT	EFF
0	0.	6.090	2.214	63.6
100	0.	6.237	2.214	64.5
200	0.	6.104	2.090	65.8
300	0.	6.268	2.060	67.1
400	0.	6.069	2.018	66.7
500	0.	6.247	1.908	69.5
600	0.	6.075	2.002	67.1
700	0.	5.987	2.347	60.8
800	0.	5.855	2.352	59.8
900	0.	5.960	2.409	59.6
1000	0.	6.200	2.523	59.3
1100	0.	6.493	2.487	61.7
1200	0.	6.230	2.108	66.2
1300	0.	6.408	2.094	67.3
1400	0.	6.239	2.419	61.2
1500	0.	6.097	2.230	63.4
1600	0.	6.118	2.324	62.0
1700	0.	6.213	1.992	67.9
1800	0.	5.938	2.042	65.6
1900	0.	6.156	2.086	66.1
2000	0.	6.357	1.974	69.0
2100	0.	6.384	2.096	67.2
2200	0.	5.953	2.040	65.7
2300	0.	5.980	1.775	70.3
# AVERAGES	24.	24.	24.	24.
% OF DATA	100.	100.	100.	100.
MINIMUM	0.	5.855	1.775	59.309
MAXIMUM	0.	6.493	2.523	70.308
MEAN	0.	6.152	2.159	64.895
STD.DEV.	0.	.164	.193	3.249
% STD.DEV.	#####	2.663	8.942	5.006

24-HOUR REMOVAL EFICIENCY USING

$[MEAN]_1^1 \; E_{IN}, E_{OUT}$: 64.916%

NOTE: $[MEAN]_X^Y$ IS DEFINED AS:

THE MEAN FOR X DAYS USING Y-HOUR AVERAGES

DAILY SUMMARY OF RESULTS

LOCATION: RICKENBACKER AFB 1979
DATE: 3-28-79

TIME	LOAD	E IN	E OUT	EFF
0	0.	6.337	1.740	72.5
100	0.	6.053	1.796	70.3
200	0.	6.424	1.762	72.6
300	0.	6.254	1.961	68.6
400	0.	6.400	2.027	68.3
500	0.	6.433	2.059	68.0
600	0.	6.168	1.947	68.4
700	0.	6.304	1.971	68.7
800	0.	6.050	1.949	67.8
900	0.	6.711	1.945	71.0
1000	0.	6.756	2.208	67.3
1100	0.	6.342	1.963	69.1
1200	0.	6.637	1.921	71.1
1300	0.	7.064	1.880	73.4
1400	0.	6.652	1.556	76.6
1500	0.	6.546	1.251	80.9
1600	0.	6.672	1.787	73.2
1700	0.	######	######	#####
1800	0.	######	######	#####
1900	0.	######	######	#####
2000	0.	######	######	#####
2100	0.	######	######	#####
2200	0.	######	######	#####
2300	0.	######	######	#####
# AVERAGES	24.	17.	17.	17.
% OF DATA	100.	71.	71.	71.
MINIMUM	0.	6.050	1.251	67.323
MAXIMUM	0.	7.064	2.208	80.888
MEAN	0.	######	######	######
STD.DEV.	0.	######	######	######
% STD.DEV.	#####	######	######	######

24-HOUR REMOVAL EFICIENCY USING

$$[MEAN]_1^{E_{IN}, E_{OUT}} : .000\%$$

NOTE: $[MEAN]_X^Y$ IS DEFINED AS:

THE MEAN FOR X DAYS USING Y-HOUR AVERAGES

DAILY SUMMARY OF RESULTS

LOCATION: RICKENBACKER AFB 1979
DATE: 3-29-79

TIME	LOAD	E IN	E OUT	EFF
0	0.	######	######	#####
100	0.	######	######	#####
200	0.	######	######	#####
300	0.	######	######	#####
400	0.	######	######	#####
500	0.	######	######	#####
600	0.	######	######	#####
700	0.	######	######	#####
800	0.	6.686	1.769	73.5
900	0.	6.445	1.504	76.7
1000	0.	6.428	1.298	79.8
1100	0.	6.565	1.463	77.7
1200	0.	6.363	1.706	73.2
1300	0.	6.412	1.671	73.9
1400	0.	6.450	1.495	76.8
1500	0.	6.417	1.349	79.0
1600	0.	5.754	1.293	77.5
1700	0.	7.893	1.150	85.4
1800	0.	7.042	1.216	82.7
1900	0.	7.206	1.254	82.6
2000	0.	7.567	1.207	84.1
2100	0.	7.393	1.033	86.0
2200	0.	7.971	.955	88.0
2300	0.	8.151	######	#####
# AVERAGES	24.	16.	15.	15.
% OF DATA	100.	67.	63.	63.
MINIMUM	0.	5.754	.955	73.195
MAXIMUM	0.	8.151	1.769	88.017
MEAN	0.	######	######	######
STD.DEV.	0.	######	######	######
% STD.DEV.	#####	######	######	######

24-HOUR REMOVAL EFICIENCY USING

$$[MEAN]_1 \; E_{IN}, E_{OUT} : .000\%$$

NOTE: $[MEAN]^{Y}_{X}$ IS DEFINED AS:

THE MEAN FOR X DAYS USING Y-HOUR AVERAGES

DAILY SUMMARY OF RESULTS

LOCATION: RICKENBACKER AFB 1979
DATE: 3-30-79

TIME	LOAD	E IN	E OUT	EFF
0	0.	7.092	######	#####
100	0.	8.016	######	#####
200	0.	7.870	######	#####
300	0.	7.263	######	#####
400	0.	7.147	######	#####
500	0.	7.374	######	#####
600	0.	7.788	######	#####
700	0.	8.323	######	#####
800	0.	8.021	######	#####
900	0.	7.360	######	#####
1000	0.	7.765	1.236	84.1
1100	0.	6.742	1.091	83.8
1200	0.	7.031	1.035	85.3
1300	0.	7.790	1.083	86.1
1400	0.	7.458	1.146	84.6
1500	0.	7.181	1.187	83.5
1600	0.	7.961	1.244	84.4
1700	0.	8.049	1.175	85.4
1800	0.	7.596	1.155	84.8
1900	0.	7.720	1.257	83.7
2000	0.	7.500	1.337	82.2
2100	0.	7.681	1.248	83.7
2200	0.	7.990	1.251	84.3
2300	0.	8.033	1.053	86.9
# AVERAGES	24.	24.	14.	14.
% OF DATA	100.	100.	58.	58.
MINIMUM	0.	6.742	1.035	82.167
MAXIMUM	0.	8.323	1.337	86.885
MEAN	0.	7.615	######	######
STD.DEV.	0.	.400	######	######
% STD.DEV.	#####	5.256	######	######

24-HOUR REMOVAL EFICIENCY USING

$(MEAN)_1$ E_{IN} , E_{OUT} : ######%

NOTE: $(MEAN)_X^Y$ IS DEFINED AS:

THE MEAN FOR X DAYS USING Y-HOUR AVERAGES

DAILY SUMMARY OF RESULTS

LOCATION: RICKENBACKER AFB 1979
DATE: 3-31-79

TIME	LOAD	E IN	E OUT	EFF
0	0.	7.519	.957	87.3
100	0.	7.684	.927	87.9
200	0.	7.993	######	#####
300	0.	7.674	######	#####
400	0.	7.955	######	#####
500	0.	7.693	######	#####
600	0.	7.704	######	#####
700	0.	7.571	1.133	85.0
800	0.	7.459	1.216	83.7
900	0.	7.665	1.215	84.1
1000	0.	7.194	1.099	84.7
1100	0.	7.131	1.276	82.1
1200	0.	7.128	1.095	84.6
1300	0.	7.180	1.078	85.0
1400	0.	7.544	1.113	85.3
1500	0.	7.244	1.164	83.9
1600	0.	7.373	1.121	84.8
1700	0.	7.284	1.190	83.7
1800	0.	7.346	1.170	84.1
1900	0.	7.320	1.152	84.3
2000	0.	7.048	1.229	82.6
2100	0.	7.268	1.242	82.9
2200	0.	7.269	1.231	83.1
2300	0.	7.293	1.347	81.5
# AVERAGES	24.	24.	19.	19.
% OF DATA	100.	100.	79.	79.
MINIMUM	0.	7.048	.927	81.537
MAXIMUM	0.	7.993	1.347	87.941
MEAN	0.	7.439	1.155	84.243
STD.DEV.	0.	.260	.102	1.570
% STD.DEV.	#####	3.489	8.812	1.864

24-HOUR REMOVAL EFICIENCY USING

$[MEAN]_{1}^{1} \; E_{IN}, E_{OUT}$: 84.469%

NOTE: $[MEAN]_{X}^{Y}$ IS DEFINED AS:

THE MEAN FOR X DAYS USING Y-HOUR AVERAGES

DAILY SUMMARY OF RESULTS

LOCATION: RICKENBACKER AFB 1979
DATE: 4- 1-79

TIME	LOAD	E IN	E OUT	EFF
0	0.	7.114	1.584	77.7
100	0.	6.758	1.797	73.4
200	0.	6.853	2.028	70.4
300	0.	6.943	2.181	68.6
400	0.	7.254	2.235	69.2
500	0.	7.486	1.753	76.6
600	0.	6.732	1.725	74.4
700	0.	6.740	1.660	75.4
800	0.	6.905	1.439	79.2
900	0.	7.107	1.540	78.3
1000	0.	6.837	1.560	77.2
1100	0.	6.940	1.493	78.5
1200	0.	6.759	1.572	76.7
1300	0.	6.859	1.696	75.3
1400	0.	6.839	1.811	73.5
1500	0.	7.085	1.794	74.7
1600	0.	7.447	1.998	73.2
1700	0.	7.199	1.589	77.9
1800	0.	7.180	1.124	84.3
1900	0.	7.036	1.077	84.7
2000	0.	6.774	1.048	84.5
2100	0.	7.192	1.025	85.8
2200	0.	7.287	1.217	83.3
2300	0.	6.940	1.234	82.2
# AVERAGES	24.	24.	24.	24.
% OF DATA	100.	100.	100.	100.
MINIMUM	0.	6.732	1.025	68.593
MAXIMUM	0.	7.486	2.235	85.752
MEAN	0.	7.011	1.591	77.291
STD.DEV.	0.	.223	.343	4.908
% STD.DEV.	#####	3.178	21.585	6.350

24-HOUR REMOVAL EFICIENCY USING

$[MEAN]_1 \; E_{IN}, E_{OUT}$: 77.310%

NOTE: $[MEAN]^{Y}_{X}$ IS DEFINED AS:

THE MEAN FOR X DAYS USING Y-HOUR AVERAGES

DAILY SUMMARY OF RESULTS

LOCATION: RICKENBACKER AFB 1979
DATE: 4- 2-79

TIME	LOAD	E IN	E OUT	EFF
0	0.	6.999	1.480	78.9
100	0.	7.377	1.306	82.3
200	0.	7.102	1.384	80.5
300	0.	7.233	1.381	80.9
400	0.	7.275	1.376	81.1
500	0.	7.216	1.348	81.3
600	0.	6.991	1.265	81.9
700	0.	6.858	1.404	79.5
800	0.	6.814	1.690	75.2
900	0.	6.853	1.563	77.2
1000	0.	7.459	1.578	78.8
1100	0.	7.077	1.566	77.9
1200	0.	6.645	1.411	78.8
1300	0.	6.804	1.421	79.1
1400	0.	6.769	1.238	81.7
1500	0.	7.018	1.399	80.1
1600	0.	7.198	1.395	80.6
1700	0.	7.837	1.360	82.6
1800	0.	7.560	1.439	81.0
1900	0.	7.367	1.390	81.1
2000	0.	7.793	1.528	80.4
2100	0.	7.882	1.511	80.8
2200	0.	7.732	1.610	79.2
2300	0.	7.800	1.692	78.3
# AVERAGES	24.	24.	24.	24.
% OF DATA	100.	100.	100.	100.
MINIMUM	0.	6.645	1.238	75.199
MAXIMUM	0.	7.882	1.692	82.645
MEAN	0.	7.236	1.447	79.969
STD.DEV.	0.	.377	.122	1.749
% STD.DEV.	#####	5.215	8.414	2.187

24-HOUR REMOVAL EFICIENCY USING

$[MEAN]_1^1 \; E_{IN}, E_{OUT}$: 79.999%

NOTE: $[MEAN]_X^Y$ IS DEFINED AS:

THE MEAN FOR X DAYS USING Y-HOUR AVERAGES

DAILY SUMMARY OF RESULTS

LOCATION: RICKENBACKER AFB 1979
DATE: 4- 3-79

TIME	LOAD	E IN	E OUT	EFF
0	0.	7.835	1.668	78.7
100	0.	7.887	1.708	78.3
200	0.	7.754	1.919	75.3
300	0.	7.349	2.063	71.9
400	0.	7.534	1.721	77.2
500	0.	7.506	1.676	77.7
600	0.	7.136	1.861	73.9
700	0.	7.149	1.998	72.1
800	0.	7.428	2.384	67.9
900	0.	8.931	######	#####
1000	0.	7.611	######	#####
1100	0.	8.695	1.409	83.8
1200	0.	7.433	1.436	80.7
1300	0.	7.192	1.438	80.0
1400	0.	7.516	1.430	81.0
1500	0.	7.175	1.495	79.2
1600	0.	7.943	1.333	83.2
1700	0.	7.737	1.550	80.0
1800	0.	7.760	1.358	82.5
1900	0.	7.531	.998	86.8
2000	0.	8.416	.948	88.7
2100	0.	8.269	1.328	83.9
2200	0.	7.206	1.314	81.8
2300	0.	6.985	1.318	81.2
# AVERAGES	24.	24.	22.	22.
% OF DATA	100.	100.	92.	92.
MINIMUM	0.	6.985	.948	67.909
MAXIMUM	0.	8.931	2.384	88.734
MEAN	0.	7.666	1.561	79.346
STD.DEV.	0.	.500	.341	4.964
% STD.DEV.	#####	6.524	21.868	6.257

24-HOUR REMOVAL EFICIENCY USING

$$\{MEAN\}_{1}^{1} \; E_{IN} \, , \, E_{OUT} \; : \; 79.633\%$$

NOTE: $\{MEAN\}_{X}^{Y}$ IS DEFINED AS:

THE MEAN FOR X DAYS USING Y-HOUR AVERAGES

DAILY SUMMARY OF RESULTS

LOCATION: RICKENBACKER AFB 1979
DATE: 4- 4-79

TIME	LOAD	E IN	E OUT	EFF
0	0.	7.003	1.332	81.0
100	0.	7.053	1.303	81.5
200	0.	7.255	1.114	84.6
300	0.	7.523	1.091	85.5
400	0.	7.896	.996	87.4
500	0.	7.968	1.303	83.7
600	0.	7.957	1.462	81.6
700	0.	7.433	1.402	81.1
800	0.	7.770	1.467	81.1
900	#####	######	######	#####
1000	#####	######	######	#####
1100	#####	######	######	#####
1200	#####	######	######	#####
1300	#####	######	######	#####
1400	#####	######	######	#####
1500	#####	######	######	#####
1600	#####	######	######	#####
1700	#####	######	######	#####
1800	#####	######	######	#####
1900	#####	######	######	#####
2000	#####	######	######	#####
2100	#####	######	######	#####
2200	#####	######	######	#####
2300	#####	######	######	#####
# AVERAGES	9.	9.	9.	9.
# OF DATA	38.	38.	38.	38.
MINIMUM	0.	7.003	.996	80.974
MAXIMUM	0.	7.968	1.467	87.389
MEAN	#####	######	######	######
STD.DEV.	#####	######	######	######
% STD.DEV.	#####	######	######	######

24-HOUR REMOVAL EFICIENCY USING

$$[MEAN]_1^1 \; E_{IN}, E_{OUT} : .000\%$$

NOTE: $[MEAN]_X^Y$ IS DEFINED AS:

THE MEAN FOR X DAYS USING Y-HOUR AVERAGES

25 OPERATING DAYS
SUMMARY OF RESULTS
USING 1-HOUR AVERAGES

LOCATION: RICKENBACKER AFB 1979
DATE: 3- 8-79

	LOAD	E IN	E OUT	EFF
# AVERAGES	601.	549.	415.	369.
% OF DATA	100.	92.	69.	62.
MINIMUM	0.	5.714	.413	57.530
MAXIMUM	0.	11.287	3.012	96.140
MEAN	0.	7.249	1.680	77.032
STD.DEV.	0.	.747	.454	7.565
% STD.DEV.	0.	10.301	27.050	9.847

30-DAY REMOVAL EFICIENCY USING

$[MEAN]_{30}^{1}$ E_{IN} , E_{OUT} : 76.824%

NOTE: $[MEAN]_{X}^{Y}$ IS DEFINED AS:

THE MEAN FOR X DAYS USING Y-HOUR AVERAGES

25 OPERATING DAYS
SUMMARY OF RESULTS
USING 24-HOUR AVERAGES

LOCATION: RICKENBACKER AFB 1979
DATE: 3- 8-79

DATE	LOAD	E IN	E OUT	EFF
3- 8-79	0.	6.626	######	#####
3- 9-79	0.	6.816	######	#####
3-10-79	0.	6.717	######	#####
3-11-79	0.	6.685	2.176	67.1
3-12-79	0.	6.876	######	#####
3-13-79	0.	######	1.633	#####
3-14-79	0.	######	2.035	#####
3-15-79	0.	7.304	1.534	77.7
3-16-79	0.	8.213	1.286	82.9
3-17-79	0.	7.665	1.561	79.6
3-18-79	0.	7.736	1.793	76.8
3-19-79	0.	7.524	1.548	79.4
3-20-79	0.	7.926	1.651	79.1
3-21-79	0.	7.858	1.493	81.0
3-22-79	0.	7.628	1.420	81.4
3-23-79	0.	7.680	1.908	74.7
3-24-79	0.	7.004	2.349	66.6
3-25-79	0.	6.974	######	#####
3-26-79	0.	6.330	######	#####
3-27-79	0.	6.152	2.159	64.9
3-30-79	0.	7.615	######	#####
3-31-79	0.	7.439	1.155	84.2
4- 1-79	0.	7.011	1.591	77.3
4- 2-79	0.	7.236	1.447	80.0
4- 3-79	0.	7.666	1.561	79.3
# AVERAGES	25.	23.	18.	16.
% OF DATA	81.	74.	58.	52.
MINIMUM	0.	6.152	1.155	64.895
MAXIMUM	0.	8.213	2.349	84.243
MEAN	0.	7.247	1.683	77.001
STD.DEV.	0.	.543	.323	5.845
% STD.DEV.	#####	7.487	19.216	7.591

30-DAY REMOVAL EFICIENCY USING

$(MEAN)_{30}^{24}$ E IN , E OUT : 76.773%

NOTE: $(MEAN)_{X}^{Y}$ IS DEFINED AS:

THE MEAN FOR X DAYS USING Y-HOUR AVERAGES

FREQUENCY DISTRIBUTION

LOCATION: RICKENBACKER AFB 1979
STARTING DATE: 3- 8-79
PARAMETER: 1-HOUR EIN, LB/MMBTU

PARAMETER RANGE	OCCURRENCE FREQUENCY	OCCURRENCE PERCENTAGE	HISTOGRAM
4.400 - 4.910	0.	0.	
4.910 - 5.420	0.	0.	
5.420 - 5.930	8.	1.	*
5.930 - 6.440	89.	14.	*******
6.440 - 6.950	148.	24.	**********
6.950 - 7.460	162.	26.	**********
7.460 - 7.970	142.	23.	**********
7.970 - 8.480	50.	8.	****
8.480 - 8.990	11.	2.	*
8.990 - 9.500	0.	0.	

BEYOND MIN/MAX RANGE 11.
TOTAL POPULATION 621.

CUMULATIVE DISTRIBUTION

LOCATION: RICKENBACKER AFB 1979
DATE: 3- 8-79
PARAMETER: 1-HOUR EIN, LB/MMBTU

PARAMETER RANGE	OCCURRENCE FREQUENCY	OCCURRENCE PERCENTAGE	HISTOGRAM
4.400 - 4.910	0.	0.	
4.400 - 5.420	0.	0.	
4.400 - 5.930	8.	1.	*
4.400 - 6.440	97.	16.	********
4.400 - 6.950	245.	39.	**********
4.400 - 7.460	407.	66.	**********
4.400 - 7.970	549.	88.	**********
4.400 - 8.480	599.	96.	**********
4.400 - 8.990	610.	98.	**********
4.400 - 9.500	610.	98.	**********

BEYOND MIN/MAX RANGE 11.
TOTAL POPULATION 621.

FREQUENCY DISTRIBUTION

LOCATION: RICKENBACKER AFB 1979
STARTING DATE: 3- 8-79
PARAMETER: 1-HOUR LOG EIN

PARAMETER RANGE	OCCURRENCE FREQUENCY	PERCENTAGE	HISTOGRAM
.640 - .674	0.	0.	
.674 - .708	0.	0.	
.708 - .742	0.	0.	
.742 - .776	12.	2.	*
.776 - .810	90.	14.	*******
.810 - .844	149.	24.	**********
.844 - .878	180.	29.	**********
.878 - .912	147.	24.	**********
.912 - .946	29.	5.	**
.946 - .980	0.	0.	

BEYOND MIN/MAX RANGE 14.
TOTAL POPULATION 621.

CUMULATIVE DISTRIBUTION

LOCATION: RICKENBACKER AFB 1979
DATE: 3- 8-79
PARAMETER: 1-HOUR LOG EIN

PARAMETER RANGE	OCCURRENCE FREQUENCY	PERCENTAGE	HISTOGRAM
.640 - .674	0.	0.	
.640 - .708	0.	0.	
.640 - .742	0.	0.	
.640 - .776	12.	2.	*
.640 - .810	102.	16.	********
.640 - .844	251.	40.	**********
.640 - .878	431.	69.	**********
.640 - .912	578.	93.	**********
.640 - .946	607.	98.	**********
.640 - .980	607.	98.	**********

BEYOND MIN/MAX RANGE 14.
TOTAL POPULATION 621.

FREQUENCY DISTRIBUTION

LOCATION: RICKENBACKER AFB 1979
STARTING DATE: 3- 8-79
PARAMETER: 1-HOUR EOUT, LB/MMBTU

PARAMETER RANGE	OCCURRENCE FREQUENCY	PERCENTAGE	HISTOGRAM
.400 - .870	21.	4.	**
.870 - 1.340	88.	17.	*********
1.340 - 1.810	200.	39.	**********
1.810 - 2.280	160.	32.	**********
2.280 - 2.750	34.	7.	***
2.750 - 3.220	4.	1.	
3.220 - 3.690	0.	0.	
3.690 - 4.160	0.	0.	
4.160 - 4.630	0.	0.	
4.630 - 5.100	0.	0.	

BEYOND MIN/MAX RANGE 0.
TOTAL POPULATION 507.

CUMULATIVE DISTRIBUTION

LOCATION: RICKENBACKER AFB 1979
DATE: 3- 8-79
PARAMETER: 1-HOUR EOUT, LB/MMBTU

PARAMETER RANGE	OCCURRENCE FREQUENCY	PERCENTAGE	HISTOGRAM
.400 - .870	21.	4.	**
.400 - 1.340	109.	21.	**********
.400 - 1.810	309.	61.	**********
.400 - 2.280	469.	93.	**********
.400 - 2.750	503.	99.	**********
.400 - 3.220	507.	100.	**********
.400 - 3.690	507.	100.	**********
.400 - 4.160	507.	100.	**********
.400 - 4.630	507.	100.	**********
.400 - 5.100	507.	100.	**********

BEYOND MIN/MAX RANGE 0.
TOTAL POPULATION 507.

FREQUENCY DISTRIBUTION

LOCATION: RICKENBACKER AFB 1979
STARTING DATE: 3- 8-79
PARAMETER: 1-HOUR LOG EOUT

PARAMETER RANGE	OCCURRENCE FREQUENCY	PERCENTAGE	HISTOGRAM
-.400 - -.289	9.	2.	*
-.289 - -.178	10.	2.	*
-.178 - -.067	1.	0.	
-.067 - .044	23.	5.	**
.044 - .155	106.	21.	**********
.155 - .266	177.	35.	**********
.266 - .377	154.	30.	**********
.377 - .488	27.	5.	***
.488 - .599	0.	0.	
.599 - .710	0.	0.	

BEYOND MIN/MAX RANGE 0.
TOTAL POPULATION 507.

CUMULATIVE DISTRIBUTION

LOCATION: RICKENBACKER AFB 1979
DATE: 3- 8-79
PARAMETER: 1-HOUR LOG EOUT

PARAMETER RANGE	OCCURRENCE FREQUENCY	PERCENTAGE	HISTOGRAM
-.400 - -.289	9.	2.	*
-.400 - -.178	19.	4.	**
-.400 - -.067	20.	4.	**
-.400 - .044	43.	8.	****
-.400 - .155	149.	29.	**********
-.400 - .266	326.	64.	**********
-.400 - .377	480.	95.	**********
-.400 - .488	507.	100.	**********
-.400 - .599	507.	100.	**********
-.400 - .710	507.	100.	**********

BEYOND MIN/MAX RANGE 0.
TOTAL POPULATION 507.

FREQUENCY DISTRIBUTION

LOCATION: RICKENBACKER AFB 1979
STARTING DATE: 3- 8-79
PARAMETER: 1-HOUR % EFFICIENCY

PARAMETER RANGE	OCCURRENCE FREQUENCY	PERCENTAGE	HISTOGRAM
25.000 - 32.000	0.	0.	
32.000 - 39.000	0.	0.	
39.000 - 46.000	0.	0.	
46.000 - 53.000	0.	0.	
53.000 - 60.000	7.	1.	*
60.000 - 67.000	57.	12.	******
67.000 - 74.000	107.	22.	**********
74.000 - 81.000	177.	36.	**********
81.000 - 88.000	120.	24.	**********
88.000 - 95.000	0.	0.	

BEYOND MIN/MAX RANGE 23.
TOTAL POPULATION 491.

CUMULATIVE DISTRIBUTION

LOCATION: RICKENBACKER AFB 1979
DATE: 3- 8-79
PARAMETER: 1-HOUR % EFFICIENCY

PARAMETER RANGE	OCCURRENCE FREQUENCY	PERCENTAGE	HISTOGRAM
25.000 - 32.000	0.	0.	
25.000 - 39.000	0.	0.	
25.000 - 46.000	0.	0.	
25.000 - 53.000	0.	0.	
25.000 - 60.000	7.	1.	*
25.000 - 67.000	64.	13.	*******
25.000 - 74.000	171.	35.	**********
25.000 - 81.000	348.	71.	**********
25.000 - 88.000	468.	95.	**********
25.000 - 95.000	468.	95.	**********

BEYOND MIN/MAX RANGE 23.
TOTAL POPULATION 491.

FREQUENCY DISTRIBUTION

LOCATION: RICKENBACKER AFB 1979
STARTING DATE: 3- 8-79
PARAMETER: 1-HOUR LOG(% EFFICIENCY)

PARAMETER RANGE	OCCURRENCE FREQUENCY	PERCENTAGE	HISTOGRAM
1.400 - 1.458	0.	0.	
1.458 - 1.516	0.	0.	
1.516 - 1.574	0.	0.	
1.574 - 1.632	0.	0.	
1.632 - 1.690	0.	0.	
1.690 - 1.748	0.	0.	
1.748 - 1.806	31.	6.	***
1.806 - 1.864	123.	25.	**********
1.864 - 1.922	260.	53.	**********
1.922 - 1.980	0.	0.	

BEYOND MIN/MAX RANGE 77.
TOTAL POPULATION 491.

CUMULATIVE DISTRIBUTION

LOCATION: RICKENBACKER AFB 1979
DATE: 3- 8-79
PARAMETER: 1-HOUR LOG(% EFFICIENCY)

PARAMETER RANGE	OCCURRENCE FREQUENCY	PERCENTAGE	HISTOGRAM
1.400 - 1.458	0.	0.	
1.400 - 1.516	0.	0.	
1.400 - 1.574	0.	0.	
1.400 - 1.632	0.	0.	
1.400 - 1.690	0.	0.	
1.400 - 1.748	0.	0.	
1.400 - 1.806	31.	6.	***
1.400 - 1.864	154.	31.	**********
1.400 - 1.922	414.	84.	**********
1.400 - 1.980	414.	84.	**********

BEYOND MIN/MAX RANGE 77.
TOTAL POPULATION 491.

FREQUENCY DISTRIBUTION

LOCATION: RICKENBACKER AFB 1979
STARTING DATE: 3- 8-79
PARAMETER: 1-HOUR 100-% EFFICIENCY

PARAMETER RANGE	OCCURRENCE FREQUENCY	OCCURRENCE PERCENTAGE	HISTOGRAM
15.000 - 21.000	161.	33.	**********
21.000 - 27.000	133.	27.	**********
27.000 - 33.000	90.	18.	*********
33.000 - 39.000	51.	10.	*****
39.000 - 45.000	13.	3.	*
45.000 - 51.000	0.	0.	
51.000 - 57.000	0.	0.	
57.000 - 63.000	0.	0.	
63.000 - 69.000	0.	0.	
69.000 - 75.000	0.	0.	
BEYOND MIN/MAX RANGE	43.		
TOTAL POPULATION	491.		

CUMULATIVE DISTRIBUTION

LOCATION: RICKENBACKER AFB 1979
DATE: 3- 8-79
PARAMETER: 1-HOUR 100-% EFFICIENCY

PARAMETER RANGE	OCCURRENCE FREQUENCY	OCCURRENCE PERCENTAGE	HISTOGRAM
15.000 - 21.000	161.	33.	**********
15.000 - 27.000	294.	60.	**********
15.000 - 33.000	384.	78.	**********
15.000 - 39.000	435.	89.	**********
15.000 - 45.000	448.	91.	**********
15.000 - 51.000	448.	91.	**********
15.000 - 57.000	448.	91.	**********
15.000 - 63.000	448.	91.	**********
15.000 - 69.000	448.	91.	**********
15.000 - 75.000	448.	91.	**********
BEYOND MIN/MAX RANGE	43.		
TOTAL POPULATION	491.		

FREQUENCY DISTRIBUTION

LOCATION: RICKENBACKER AFB 1979
STARTING DATE: 3- 8-79
PARAMETER: 1-HOUR LOG(100-% EFFICIENCY)

PARAMETER RANGE	OCCURRENCE FREQUENCY	PERCENTAGE	HISTOGRAM
.700 - .820	6.	1.	*
.820 - .940	8.	2.	*
.940 - 1.060	3.	1.	
1.060 - 1.180	23.	5.	**
1.180 - 1.300	131.	27.	**********
1.300 - 1.420	151.	31.	**********
1.420 - 1.540	125.	25.	**********
1.540 - 1.660	39.	8.	****
1.660 - 1.780	0.	0.	
1.780 - 1.900	0.	0.	

BEYOND MIN/MAX RANGE 5.
TOTAL POPULATION 491.

CUMULATIVE DISTRIBUTION

LOCATION: RICKENBACKER AFB 1979
DATE: 3- 8-79
PARAMETER: 1-HOUR LOG(100-% EFFICIENCY)

PARAMETER RANGE	OCCURRENCE FREQUENCY	PERCENTAGE	HISTOGRAM
.700 - .820	6.	1.	*
.700 - .940	14.	3.	*
.700 - 1.060	17.	3.	**
.700 - 1.180	40.	8.	****
.700 - 1.300	171.	35.	**********
.700 - 1.420	322.	66.	**********
.700 - 1.540	447.	91.	**********
.700 - 1.660	486.	99.	**********
.700 - 1.780	486.	99.	**********
.700 - 1.900	486.	99.	**********

BEYOND MIN/MAX RANGE 5.
TOTAL POPULATION 491.

FREQUENCY DISTRIBUTION

LOCATION: RICKENBACKER AFB 1979
STARTING DATE: 3- 8-79
PARAMETER: 24-HOUR EIN, LB/MMBTU

PARAMETER RANGE	OCCURRENCE FREQUENCY	OCCURRENCE PERCENTAGE	HISTOGRAM
4.400 - 4.910	0.	0.	
4.910 - 5.420	0.	0.	
5.420 - 5.930	0.	0.	
5.930 - 6.440	2.	9.	****
6.440 - 6.950	5.	22.	**********
6.950 - 7.460	6.	26.	**********
7.460 - 7.970	9.	39.	**********
7.970 - 8.480	1.	4.	**
8.480 - 8.990	0.	0.	
8.990 - 9.500	0.	0.	

BEYOND MIN/MAX RANGE 0.
TOTAL POPULATION 23.

CUMULATIVE DISTRIBUTION

LOCATION: RICKENBACKER AFB 1979
DATE: 3- 8-79
PARAMETER: 24-HOUR EIN, LB/MMBTU

PARAMETER RANGE	OCCURRENCE FREQUENCY	OCCURRENCE PERCENTAGE	HISTOGRAM
4.400 - 4.910	0.	0.	
4.400 - 5.420	0.	0.	
4.400 - 5.930	0.	0.	
4.400 - 6.440	2.	9.	****
4.400 - 6.950	7.	30.	**********
4.400 - 7.460	13.	57.	**********
4.400 - 7.970	22.	96.	**********
4.400 - 8.480	23.	100.	**********
4.400 - 8.990	23.	100.	**********
4.400 - 9.500	23.	100.	**********

BEYOND MIN/MAX RANGE 0.
TOTAL POPULATION 23.

FREQUENCY DISTRIBUTION

LOCATION: RICKENBACKER AFB 1979
STARTING DATE: 3- 8-79
PARAMETER: 24-HOUR LOG EIN

PARAMETER RANGE	OCCURRENCE FREQUENCY	PERCENTAGE	HISTOGRAM
.640 - .674	0.	0.	
.674 - .708	0.	0.	
.708 - .742	0.	0.	
.742 - .776	0.	0.	
.776 - .810	2.	9.	****
.810 - .844	6.	26.	**********
.844 - .878	6.	26.	**********
.878 - .912	8.	35.	**********
.912 - .946	1.	4.	**
.946 - .980	0.	0.	

BEYOND MIN/MAX RANGE 0.
TOTAL POPULATION 23.

CUMULATIVE DISTRIBUTION

LOCATION: RICKENBACKER AFB 1979
DATE: 3- 8-79
PARAMETER: 24-HOUR LOG EIN

PARAMETER RANGE	OCCURRENCE FREQUENCY	PERCENTAGE	HISTOGRAM
.640 - .674	0.	0.	
.640 - .708	0.	0.	
.640 - .742	0.	0.	
.640 - .776	0.	0.	
.640 - .810	2.	9.	****
.640 - .844	8.	35.	**********
.640 - .878	14.	61.	**********
.640 - .912	22.	96.	**********
.640 - .946	23.	100.	**********
.640 - .980	23.	100.	**********

BEYOND MIN/MAX RANGE 0.
TOTAL POPULATION 23.

FREQUENCY DISTRIBUTION

LOCATION: RICKENBACKER AFB 1979
STARTING DATE: 3- 8-79
PARAMETER: 24-HOUR EOUT, LB/MMBTU

PARAMETER RANGE	OCCURRENCE FREQUENCY	PERCENTAGE	HISTOGRAM
.400 - .870	0.	0.	
.870 - 1.340	2.	11.	******
1.340 - 1.810	11.	61.	**********
1.810 - 2.280	4.	22.	**********
2.280 - 2.750	1.	6.	***
2.750 - 3.220	0.	0.	
3.220 - 3.690	0.	0.	
3.690 - 4.160	0.	0.	
4.160 - 4.630	0.	0.	
4.630 - 5.100	0.	0.	

BEYOND MIN/MAX RANGE 0.
TOTAL POPULATION 18.

CUMULATIVE DISTRIBUTION

LOCATION: RICKENBACKER AFB 1979
DATE: 3- 8-79
PARAMETER: 24-HOUR EOUT, LB/MMBTU

PARAMETER RANGE	OCCURRENCE FREQUENCY	PERCENTAGE	HISTOGRAM
.400 - .870	0.	0.	
.400 - 1.340	2.	11.	******
.400 - 1.810	13.	72.	**********
.400 - 2.280	17.	94.	**********
.400 - 2.750	18.	100.	**********
.400 - 3.220	18.	100.	**********
.400 - 3.690	18.	100.	**********
.400 - 4.160	18.	100.	**********
.400 - 4.630	18.	100.	**********
.400 - 5.100	18.	100.	**********

BEYOND MIN/MAX RANGE 0.
TOTAL POPULATION 18.

FREQUENCY DISTRIBUTION

LOCATION: RICKENBACKER AFB 1979
STARTING DATE: 3- 8-79
PARAMETER: 24-HOUR LOG EOUT

PARAMETER RANGE	OCCURRENCE FREQUENCY	OCCURRENCE PERCENTAGE	HISTOGRAM
-.400 - -.289	0.	0.	
-.289 - -.178	0.	0.	
-.178 - -.067	0.	0.	
-.067 - .044	0.	0.	
.044 - .155	3.	17.	********
.155 - .266	10.	56.	**********
.266 - .377	5.	28.	**********
.377 - .488	0.	0.	
.488 - .599	0.	0.	
.599 - .710	0.	0.	
BEYOND MIN/MAX RANGE	0.		
TOTAL POPULATION	18.		

CUMULATIVE DISTRIBUTION

LOCATION: RICKENBACKER AFB 1979
DATE: 3- 8-79
PARAMETER: 24-HOUR LOG EOUT

PARAMETER RANGE	OCCURRENCE FREQUENCY	OCCURRENCE PERCENTAGE	HISTOGRAM
-.400 - -.289	0.	0.	
-.400 - -.178	0.	0.	
-.400 - -.067	0.	0.	
-.400 - .044	0.	0.	
-.400 - .155	3.	17.	********
-.400 - .266	13.	72.	**********
-.400 - .377	18.	100.	**********
-.400 - .488	18.	100.	**********
-.400 - .599	18.	100.	**********
-.400 - .710	18.	100.	**********
BEYOND MIN/MAX RANGE	0.		
TOTAL POPULATION	18.		

FREQUENCY DISTRIBUTION

LOCATION: RICKENBACKER AFB 1979
STARTING DATE: 3- 8-79
PARAMETER: 24-HOUR % EFFICIENCY

PARAMETER RANGE	OCCURRENCE FREQUENCY	OCCURRENCE PERCENTAGE	HISTOGRAM
25.000 - 32.000	0.	0.	
32.000 - 39.000	0.	0.	
39.000 - 46.000	0.	0.	
46.000 - 53.000	0.	0.	
53.000 - 60.000	0.	0.	
60.000 - 67.000	2.	13.	******
67.000 - 74.000	1.	6.	***
74.000 - 81.000	10.	63.	**********
81.000 - 88.000	3.	19.	*********
88.000 - 95.000	0.	0.	
BEYOND MIN/MAX RANGE	0.		
TOTAL POPULATION	16.		

CUMULATIVE DISTRIBUTION

LOCATION: RICKENBACKER AFB 1979
DATE: 3- 8-79
PARAMETER: 24-HOUR % EFFICIENCY

PARAMETER RANGE	OCCURRENCE FREQUENCY	OCCURRENCE PERCENTAGE	HISTOGRAM
25.000 - 32.000	0.	0.	
25.000 - 39.000	0.	0.	
25.000 - 46.000	0.	0.	
25.000 - 53.000	0.	0.	
25.000 - 60.000	0.	0.	
25.000 - 67.000	2.	13.	******
25.000 - 74.000	3.	19.	*********
25.000 - 81.000	13.	81.	**********
25.000 - 88.000	16.	100.	**********
25.000 - 95.000	16.	100.	**********
BEYOND MIN/MAX RANGE	0.		
TOTAL POPULATION	16.		

FREQUENCY DISTRIBUTION

LOCATION: RICKENBACKER AFB 1979
STARTING DATE: 3- 8-79
PARAMETER: 24-HOUR LOG(% EFFICIENCY)

PARAMETER RANGE	OCCURRENCE FREQUENCY	PERCENTAGE	HISTOGRAM
1.400 - 1.458	0.	0.	
1.458 - 1.516	0.	0.	
1.516 - 1.574	0.	0.	
1.574 - 1.632	0.	0.	
1.632 - 1.690	0.	0.	
1.690 - 1.748	0.	0.	
1.748 - 1.806	0.	0.	
1.806 - 1.864	3.	19.	*********
1.864 - 1.922	12.	75.	**********
1.922 - 1.980	0.	0.	

BEYOND MIN/MAX RANGE 1.
TOTAL POPULATION 16.

CUMULATIVE DISTRIBUTION

LOCATION: RICKENBACKER AFB 1979
DATE: 3- 8-79
PARAMETER: 24-HOUR LOG(% EFFICIENCY)

PARAMETER RANGE	OCCURRENCE FREQUENCY	PERCENTAGE	HISTOGRAM
1.400 - 1.458	0.	0.	
1.400 - 1.516	0.	0.	
1.400 - 1.574	0.	0.	
1.400 - 1.632	0.	0.	
1.400 - 1.690	0.	0.	
1.400 - 1.748	0.	0.	
1.400 - 1.806	0.	0.	
1.400 - 1.864	3.	19.	*********
1.400 - 1.922	15.	94.	**********
1.400 - 1.980	15.	94.	**********

BEYOND MIN/MAX RANGE 1.
TOTAL POPULATION 16.

FREQUENCY DISTRIBUTION

LOCATION: RICKENBACKER AFB 1979
STARTING DATE: 3- 8-79
PARAMETER: 24-HOUR 100-% EFFICIENCY

PARAMETER RANGE	OCCURRENCE FREQUENCY	OCCURRENCE PERCENTAGE	HISTOGRAM
15.000 - 21.000	9.	56.	**********
21.000 - 27.000	4.	25.	**********
27.000 - 33.000	1.	6.	***
33.000 - 39.000	2.	13.	******
39.000 - 45.000	0.	0.	
45.000 - 51.000	0.	0.	
51.000 - 57.000	0.	0.	
57.000 - 63.000	0.	0.	
63.000 - 69.000	0.	0.	
69.000 - 75.000	0.	0.	

BEYOND MIN/MAX RANGE 0.
TOTAL POPULATION 16.

CUMULATIVE DISTRIBUTION

LOCATION: RICKENBACKER AFB 1979
DATE: 3- 8-79
PARAMETER: 24-HOUR 100-% EFFICIENCY

PARAMETER RANGE	OCCURRENCE FREQUENCY	OCCURRENCE PERCENTAGE	HISTOGRAM
15.000 - 21.000	9.	56.	**********
15.000 - 27.000	13.	81.	**********
15.000 - 33.000	14.	88.	**********
15.000 - 39.000	16.	100.	**********
15.000 - 45.000	16.	100.	**********
15.000 - 51.000	16.	100.	**********
15.000 - 57.000	16.	100.	**********
15.000 - 63.000	16.	100.	**********
15.000 - 69.000	16.	100.	**********
15.000 - 75.000	16.	100.	**********

BEYOND MIN/MAX RANGE 0.
TOTAL POPULATION 16.

FREQUENCY DISTRIBUTION

LOCATION: RICKENBACKER AFB 1979
STARTING DATE: 3- 8-79
PARAMETER: 24-HOUR LOG(100-% EFFICIENCY)

PARAMETER RANGE	OCCURRENCE FREQUENCY	OCCURRENCE PERCENTAGE	HISTOGRAM
.700 - .820	0.	0.	
.820 - .940	0.	0.	
.940 - 1.060	0.	0.	
1.060 - 1.180	0.	0.	
1.180 - 1.300	4.	25.	**********
1.300 - 1.420	9.	56.	**********
1.420 - 1.540	2.	13.	******
1.540 - 1.660	1.	6.	***
1.660 - 1.780	0.	0.	
1.780 - 1.900	0.	0.	
BEYOND MIN/MAX RANGE	0.		
TOTAL POPULATION	16.		

CUMULATIVE DISTRIBUTION

LOCATION: RICKENBACKER AFB 1979
DATE: 3- 8-79
PARAMETER: 24-HOUR LOG(100-% EFFICIENCY)

PARAMETER RANGE	OCCURRENCE FREQUENCY	OCCURRENCE PERCENTAGE	HISTOGRAM
.700 - .820	0.	0.	
.700 - .940	0.	0.	
.700 - 1.060	0.	0.	
.700 - 1.180	0.	0.	
.700 - 1.300	4.	25.	**********
.700 - 1.420	13.	81.	**********
.700 - 1.540	15.	94.	**********
.700 - 1.660	16.	100.	**********
.700 - 1.780	16.	100.	**********
.700 - 1.900	16.	100.	**********
BEYOND MIN/MAX RANGE	0.		
TOTAL POPULATION	16.		

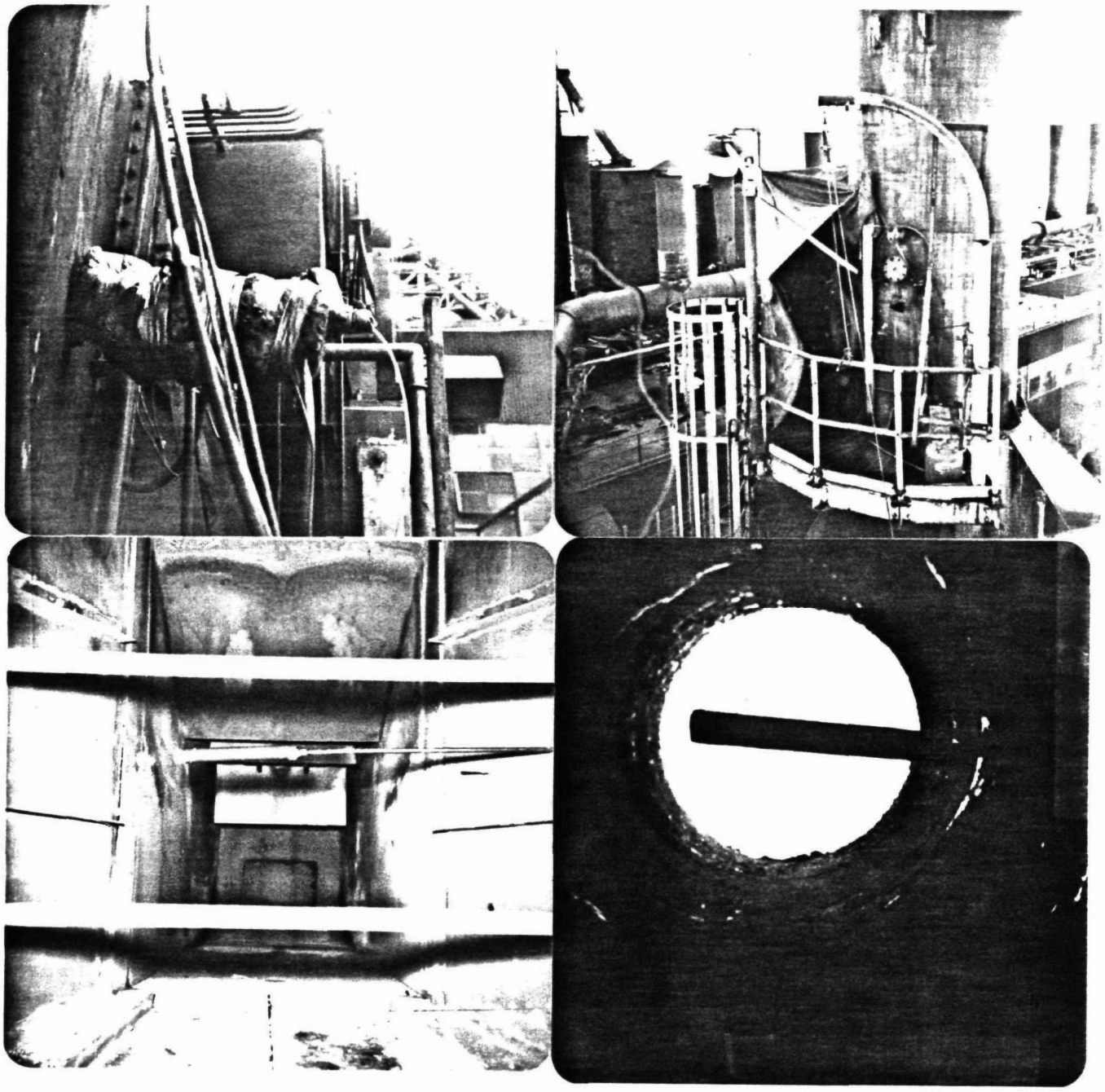

UPPER LEFT: EXTERNAL VIEW OF INLET PROBE (INSULATED)
LOWER LEFT: INTERNAL VIEW OF INLET PROBE

UPPER RIGHT: OUTLET PROBE SHELTER
LOWER RIGHT: INTERNAL VIEW OF OUTLET PROBE

Figure 5-4 Photographs of probe placement after modification.