United States
Environmental Protection
Agency

Environmental Monitoring Systems
Laboratory
Research Triangle Park NC 27711

Research and Development

EPA/600/4-77/027b August 1988

EPA

Quality Assurance Handbook for Air Pollution Measurement Systems: Volume III. Stationary Sources Specific Methods

Section 3.16

Volume III
Table of Contents

Section		Pages	Date
	Purpose and Overview of the Quality Assurance Handbook	3	1-04-85
3 0	General Aspects of Quality Assurance for Stationary Source Emissions Testing Programs		
3.0.1	Planning the Test Program	12	5-01-79
3.0.2	General Factors Involved in Stationary Source Testing	9	5-01-79
3.0.3	Chain-of-Custody Procedure for Source Sampling	7	5-01-79
3.0.4	Procedure for NBS-Traceable Certification of Compressed Gas Working Standards Used for Calibration and Audit of Continuous Source Emission Monitoring (Revised Traceability Protocol No. 1	14	6-09-87
3 0 5	Specific Procedures to Assess Accuracy of Reference Methods Used for SPNSS	58	9-23-85
3 0 6	Specific Procedures to Assess Accuracy of Reference Methods Used for NESHAP	14	9-23-85
3 0 7	Calculation and Interpretation of Accuracy for Continuous Emission Monitoring Systems (CEMS)	14	11-05-85
3 0 8	Audit Materials Available from U.S.E.P.A.	7	11-04-85
3 0 9	Continuous Emission Monitoring Systems (CEMS) Good Operating Practices	47	6-01-86
3 0 10	Guideline for Developing Quality Control Procedures for Gaseous Continuous Emission Monitoring Systems	11	11 26-85
3 1	Method 2 Determination of Stack Gas Velocity and Volumetric Flow Rate		
3 1 1	Procurement of Apparatus and Supplies	15	1 15-80
3 1 2	Calibration of Apparatus	21	1 15-80
3 1 3	Presampling Operations	7	1-15-80
3 1.4	On-Site Measurements	12	1 15-80
3.1.5	Postsampling Operations	3	1-15-80
3.1.6	Calculations	4	1-15-80
3 1 7	Maintenance	1	1 15-80
3 1.8	Auditing Procedure	5	1 15-80
3 1 9	Recommended Standards for Establishing Traceability	1	1-15-80
3.1.10	Reference Method	11	1-15-80
3.1 11	References	2	1 15-80
3 1 12	Data Forms	8	1 15-80
3 2	Method 3 Determination of Carbon Dioxide, Oxygen Excess Air and Dry Molecular Weight		
3.2.1	Procurement of Apparatus and Supplies	15	1 15-80
3.2.2	Calibration of Apparatus	4	1 15-80
3.2.3	Presampling Operations	6	1 15-80

Table of Contents (continued)

Section		Pages	Date
3.2.4	On-Site Measurements	12	1-15-80
3.2.5	Postsampling Operations	2	1-15-80
3.2.6	Calculations	3	1-15-80
3.2.7	Maintenance	1	1-15-80
3.2.8	Auditing Procedure	5	1-15-80
3.2.9	Recommended Standards for Establishing Traceability	1	1-15-80
3.2.10	Reference Method	3	1-15-80
3.2.11	References	1	1-15-80
3.2.12	Data Forms	6	1-15-80
3.3	Method 4—Determination of Moisture in Stack Gases		
3.3.1	Procurement of Apparatus and Supplies	9	1-15-80
3.3.2	Calibration of Apparatus	19	1-15-80
3.3.3	Presampling Operations	7	1-15-80
3.3.4	On-Site Measurements	10	1-15-80
3.3.5	Postsampling Operations	4	1-15-80
3.3.6	Calculations	8	1-15-80
3.3.7	Maintenance	3	1-15-80
3.3.8	Auditing Procedure	4	1-15-80
3.3.9	Recommended Standards for Establishing Traceability	1	1-15-80
3.3.10	Reference Method	5	1-15-80
3.3.11	References	1	1-15-80
3.3.12	Data Forms	14	1-15-80
3.4	Method 5—Determination of Particulate Emissions from Stationary Sources		
3.4.1	Procurement of Apparatus and Supplies	15	1-15-80
3.4.2	Calibration of Apparatus	22	1-15-80
3.4.3	Presampling Operations	20	1-15-80
3.4.4	On-Site Measurements	19	1-15-80
3.4.5	Postsampling Operations	15	1-15-80
3.4.6	Calculations	10	1-15-80
3.4.7	Maintenance	3	1-15-80
3.4.8	Auditing Procedure	7	1-15-80
3.4.9	Recommended Standards for Establishing Traceability	1	1-15-80
3.4.10	Reference Method	6	1-15-80
3.4.11	References	2	1-15-80
3.4.12	Data Forms	21	1-15-80
3.5	Method 6—Determination of Sulfur Dioxide Emissions from Stationary Sources		
3.5.1	Procurement of Apparatus and Supplies	6	5-01-79
3.5.2	Calibration of Apparatus	6	5-01-79
3.5.3	Presampling Operations	3	5-01-79
3.5.4	On-Site Measurements	7	5-01-79
3.5.5	Postsampling Operations	7	5-01-79
3.5.6	Calculations	2	5-01-79
3.5.7	Maintenance	1	5-01-79
3.5.8	Auditing Procedure	6	9-23-85
3.5.9	Recommended Standards for Establishing Traceability	1	5-01-79
3.5.10	Reference Method	4	5-01-79
3.5.11	References	1	5-01-79

Table of Contents (continued)

Section		Pages	Date
3.5.12	Data Forms	13	5-01-79
3.6	Method 7—Determination of Nitrogen Oxide Emissions from Stationary Sources		
3.6.1	Procurement of Apparatus and Supplies	5	5-01-79
3.6.2	Calibration of Apparatus	5	5-01-79
3.6.3	Presampling Operations	5	5-01-79
3.6.4	On-Site Measurements	8	5-01-79
3.6.5	Postsampling Operations	5	5-01-79
3.6.6	Calculations	4	5-01-79
3.6.7	Maintenance	1	5-01-79
3.6.8	Auditing Procedure	6	9-23-85
3.6.9	Recommended Standards for Establishing Traceability	1	5-01-79
3.6.10	Reference Method	5	5-01-79
3.6.11	References	1	5-01-79
3.6.12	Data Forms	13	5-01-79
3.7	Method 8—Determination of Sulfuric Mist and Sulfur Dioxide Emissions from Stationary Sources		
3.7.1	Procurement of Apparatus and Supplies	7	5-01-79
3.7.2	Calibration of Apparatus	10	5-01-79
3.7.3	Presampling Operations	4	5-01-79
3.7.4	On-Site Measurements	10	5-01-79
3.7.5	Postsampling Operations	9	5-01-79
3.7.6	Calculations	6	5-01-79
3.7.7	Maintenance	2	5-01-79
3.7.8	Auditing Procedure	3	5-01-79
3.7.9	Recommended Standards for Establishing Traceability	1	5-01-79
3.7.10	Reference Method	5	5-01-79
3.7.11	References	1	5-01-79
3.7.12	Data Forms	17	5-01-79
3.8	Method 10—Determination of Carbon Monoxide Emissions from Stationary Sources		
3.8.1	Procurement of Apparatus and Supplies	13	1-04-82
3.8.2	Calibration of Apparatus	18	1-04-82
3.8.3	Presampling Operations	6	1-04-82
3.8.4	On-Site Measurements	12	1-04-82
3.8.5	Postsampling Operations	5	1-04-82
3.8.6	Calculations	3	1-04-82
3.8.7	Maintenance	2	1-04-82
3.8.8	Auditing Procedure	7	1-04-82
3.8.9	Recommended Standards for Establishing Traceability	7	1-04-82
3.8.10	Reference Method	3	1-04-82
3.8.11	References	2	1-04-82
3.8.12	Data Forms	11	1-04-82
3.9	Method 13B—Determination of Total Fluoride Emissions from Stationary Sources (Specific-Ion Electrode Method)		

Table of Contents (continued)

Section		Pages	Date
3.9.1	Procurement of Apparatus and Supplies	20	1-04-82
3.9.2	Calibration of Apparatus	25	1-04-82
3.9.3	Presampling Operations	6	1-04-82
3.9.4	On-Site Measurements	21	1-04-82
3.9.5	Postsampling Operations	19	1-04-82
3.9.6	Calculations	7	1-04-82
3.9.7	Maintenance	3	1-04-82
3.9.8	Auditing Procedure	8	1-04-82
3.9.9	Recommended Standards for Establishing Traceability	1	1-04-82
3.9.10	Reference Method	2	1-04-82
3.9.11	References	1	1-04-82
3.9.12	Data Forms	22	1-04-82
3.10	Method 13A—Determination of Total Fluoride Emissions from Stationary Sources (SPADNS Zirconium Lake Method)		
3.10.1	Procurement of Apparatus and Supplies	13	1-04-82
3.10.2	Calibration of Apparatus	5	1-04-82
3.10.3	Presampling Operations	3	1-04-82
3.10.4	On-Site Measurements	3	1-04-82
3.10.5	Postsampling Operations	18	1-04-82
3.10.6	Calculations	7	1-04-82
3.10.7	Maintenance	2	1-04-82
3.10.8	Auditing Procedure	1	1-04-82
3.10.9	Recommended Standards for Establishing Traceability	1	1-04-82
3.10.10	Reference Method	5	1-04-82
3.10.11	References	1	1-04-82
3.10.12	Data Forms	6	1-04-82
3.11	Method 17—Determination of Particulate Emissions from Stationary Sources (In-Stack Filtration Method)		
3.11.1	Procurement of Apparatus and Supplies	9	1-04-82
3.11.2	Calibration of Apparatus	2	1-04-82
3.11.3	Presampling Operations	3	1-04-82
3.11.4	On-Site Measurements	6	1-04-82
3.11.5	Postsampling Operations	1	1-04-82
3.11.6	Calculations	1	1-04-82
3.11.7	Maintenance	2	1-04-82
3.11.8	Auditing Procedure	2	1-04-82
3.11.9	Recommended Standards for Establishing Traceability	1	1-04-82
3.11.10	Reference Method	11	1-04-82
3.11.11	References	1	1-04-82
3.11.12	Data Forms	1	1-04-82
3.12	Method 9—Visible Determination of the Opacity Emissions from Stationary Sources		
3.12.1	Certification and Training of Observers	5	4-20-83
3.12.2	Procurement of Apparatus and Supplies	2	4-20-83
3.12.3	Preobservation Operations	2	4-20-83
3.12.4	On-Site Field Observations	18	4-20-83
3.12.5	Postobservation Operations	2	4-20-83

Table of Contents (continued)

Section		Pages	Date
3.12.6	Calculations	7	4-20-83
3.12.7	Auditing Procedure	2	4-20-83
3.12.8	Reference Method	5	4-20-83
3.12.9	References and Bibliography	1	4-20-83
3.12.10	Data Forms	9	4-20-83
3.13	Methods 6A and 6B—Determinations of Sulfur Dioxide, Moisture, and Carbon Dioxide Emissions from Fossil Fuel Combustion Sources		
3.13.1	Procurement of Apparatus and Supplies	18	7-01-86
3.13.2	Calibration of Apparatus	14	7-01-86
3.13.3	Presampling Operations	6	7-01-86
3.13.4	On-Site Measurements	25	7-01-86
3.13.5	Postsampling Operations	15	7-01-86
3.13.6	Calculations	9	7-01-86
3.13.7	Maintenance	3	7-01-86
3.13.8	Auditing Procedure	11	7-01-86
3.13.9	Recommended Standards for Establishing Traceability	1	7-01-86
3.13.10	Reference Method	5	7-01-86
3.13.11	References	2	7-01-86
3.13.12	Data Forms	18	7-01-86
3.14	Method 7A—Determination of Nitrogen Oxide Emissions from Stationary Sources (Grab Sampling—Ion Chromatographic Method)		
3.14.1	Procurement of Apparatus and Supplies	10	7-01-86
3.14.2	Calibration of Apparatus	14	7-01-86
3.14.3	Presampling Operations	6	7-01-86
3.14.4	On-Site Measurements	7	7-01-86
3.14.5	Postsampling Operations	11	7-01-86
3.14.6	Calculations	6	7-01-86
3.14.7	Maintenance	2	7-01-86
3.14.8	Auditing Procedure	6	7-01-86
3.14.9	Recommended Standards for Establishing Traceability	1	7-01-86
3.14.10	Reference Method	3	7-01-86
3.14.11	References	2	7-01-86
3.14.12	Data Forms	12	7-01-86
3.15	Method 7D—Determination of Nitrogen Oxide Emissions from Stationary Sources (Alkaline-Permanganate—Ion Chromatographic Method)		
3.15.1	Procurement of Apparatus and Supplies	18	7-01-86
3.15.2	Calibration of Apparatus	20	7-01-86
3.15.3	Presampling Operations	6	7-01-86
3.15.4	On-Site Measurements	10	7-01-86
3.15.5	Postsampling Operations	13	7-01-86
3.15.6	Calculations	5	7-01-86
3.15.7	Maintenance	3	7-01-86
3.15.8	Auditing Procedure	6	7-01-86
3.15.9	Recommended Standards for Establishing Traceability	1	7-01-86

Table of Contents (continued)

Section		Pages	Date
3.15.10	Reference Method	9	7-01-86
3.15.11	References	2	7-01-86
3.15.12	Data Forms	11	7-01-86
3.16	Method 18—Measurement of Gaseous Organic Compound Emissions by Gas Chromatography		
3.16.1	Procurement of Apparatus and Supplies	16	6-30-88
3.16.2	Calibration of Apparatus	15	6-30-88
3.16.3	Presampling Operations	44	6-30-88
3.16.4	On-Site Measurements	33	6-30-88
3.16.5	Postsampling Operations	39	6-30-88
3.16.6	Calculations	6	6-30-88
3.16.7	Maintenance	3	6-30-88
3.16.8	Auditing Procedure	8	6-30-88
3.16.9	Recommended Standards for Establishing Traceability	1	6-30-88
3.16.10	Reference Methods	22	6-30-88
3.16.11	References	5	6-30-88
3.16.12	Data Forms	21	6-30-88

Section 3.16

METHOD 18 -- MEASUREMENT OF GASEOUS ORGANIC COMPOUND EMISSIONS BY GAS CHROMATOGRAPHY

OUTLINE

Section	Documentation	Number of Pages
SUMMARY	3.16	3
METHOD HIGHLIGHTS	3.16	19
METHOD DESCRIPTION		
1. PROCUREMENT OF APPARATUS AND SUPPLIES	3.16.1	16
2. CALIBRATION OF APPARATUS	3.16.2	15
3. PRESAMPLING OPERATIONS	3.16.3	44
4. ON-SITE MEASUREMENTS	3.16.4	33
5. POSTSAMPLING OPERATIONS	3.16.5	39
6. CALCULATIONS	3.16.6	6
7. MAINTENANCE	3.16.7	3
8. AUDITING PROCEDURE	3.16.8	8
9. RECOMMENDED STANDARDS FOR ESTABLISHING TRACEABILITY	3.16.9	1
10. REFERENCE METHODS	3.16.10	22
11. REFERENCES	3.16.11	5
12. DATA FORMS	3.16.12	21

To assist the Handbook user in applying Section 3.16 to particular sampling and analytical techniques, the following table provides a quick cross reference to each of the subsections dealing with each of the sampling and analytical approaches.

CROSS REFERENCES TO SUBSECTIONS RELATED TO SAMPLING APPROACHES

Activity	All Methods	Flask Sampling	Rigid Container Sampling	Direct Bag Sampling	Direct Interface Sampling	Dilution Interface Sampling	Adsorption Tube Sampling
Procurementof equipment							
Sampling	1.1p1*	1.1p3	1.1p4	1.1p4	1.1p6	1.1p7	1.1p3
Analytical	1.2p8	1.2p8	1.2p8	1.2p8	1.2p8	1.2p8	1.2p8
Reagents	1.3p9	1.3p9	1.3p9	1.3p9	1.3p9	1.3p9	1.3p9
Calibration							
Sampling equipment	2.1p1	2.1p1	2.1p1	2.1p1	2.1p1	2.2p9	2.1p1
Presampling operations							
Survey measurements	3.1p1	3.1p1	3.1p1	3.1p1	3.1p1	3.1p1	3.1p1
Survey preparations	3.2p1	3.2p8	3.2 p9	3.2p9	N/A	N/A	3.2p10
Sample collection	3.3p10	3.3p11	3.3p12	3.3p12	N/A	N/A	3.3p12
Sample analysis	3.4p13	3.4p17	3.4p18	3.4p18	N/A	N/A	3.4p19
Interpretation of data	3.4p19	3.4p19	3.4p19	3.4p19	3.4p19	3.4p19	3.4p19
Preparation for test:							
equipment	3.5p21	3.5p28	3.5p28	3.5p28	3.5p29	3.5p29	3.5p28
reagents	3.6p30	3.6p30	3.6p30	3.6p30	3.6p30	3.6p30	3.6p30
Packing equipment	3.7p32	3.7p32	3.7p32	3.7p32	3.7p32	3.7p32	3.7p32
On-site Measurements							
Sampling	4.3p2	N/A	4.3p2	4.3p9	4.3p13	4.3p14	4.3p17
Postsampling Operations							
Prepartion of calibration standards	5.1p1	5.1p1	5.1p1	5.1p1	5.1p1	5.1p1	5.1p12
Audit sample analysis	5.2p22	N/A	5.2p22	5.2p22	5.2p22	5.2p22	5.2p22
Sample analysis	5.3p22	N/A	5.3p22	5.2p22	5.2p23	5.2p25	5.2p26
Calculations							
Emission calculations	6.0p1	6.1p1	6.1p1	6.1p1	6.1p1	6.1p1	6.2p2
Auditing Procedures							
Performance audits	8.1p1	N/A	8.1p4	8.1p4	8.1p4	8.1p5	8.1p5
System audits	8.2p5	N/A	8.2p5	8.2p5	8.2p5	8.2p5	8.2p5

* "1.1p1" - Means that the procurement of the sampling equipment is dicussed in Section 3.16.1.1 beginning on page 1 of Section 3.16.1.

SUMMARY

Method 18 is a generic method for measuring gaseous organic compounds. The method is based on separating the major gaseous organic components of a gas mixture with a gas chromatograph (GC) and measuring the separated components with a suitable detector. The gas samples are analyzed immediately as taken from the stack or within a set period of time after being collected in a Tedlar bag or on an adsorption tube.

To identify and quantify the major components, the retention times of each separated component are compared with those of known compounds under identical conditions. Therefore, the analyst must identify approximate concentrations of the organic emission components beforehand. With this information, the analyst can then prepare or purchase commercially available standard mixtures to calibrate the GC under physical conditions identical to those that will be used for the samples. The analyst must also have some presurvey information concerning interferences arising from other compounds present and indicating the need for sample dilution to avoid detector saturation, gas stream filtration to eliminate particulate matter, and prevention of sample loss in moisture condensation in the sampling apparatus.

This method is structured to analyze approximately 90 percent of the total gaseous organics emitted from an industrial source. It does not include techniques to identify and measure trace amounts of organic compounds, such as those found in building air and fugitive emission sources.

This method will not determine compounds that 1) are polymeric (high molecular weight), 2) polymerize before analysis, or 3) have very low vapor pressures at stack or instrument conditions.

The range of this method is from about 1 part per million (ppm)* to the upper limit governed by GC detector saturation or column overloading. The upper limit can be extended by diluting the stack gases with an inert gas or by using smaller gas sampling loops. The sensitivity limit for a compound is defined as the minimum detectable concentration of that compound, or the concentration that produces a signal-to-noise ratio of three to one. The minimum detectable concentration and limit of quantitation are determined during the presurvey calibration for each compound.

The method descriptions given herein are based on the method[1,2] promulgated October 8, 1983, and on corrections and additions published on May 30, 1984 (Section 3.16.10). Revisions to the method were promulgated February 19, 1987 and these are also described.[3] Blank forms for recording data are provided in the Method Highlights and in Section 3.3.12 for the convenience of Handbook users.

*Note: Selective detectors may allow detection and quantitation of far smaller concentrations of certain types of gaseous organic compounds.

METHOD HIGHLIGHTS

Section 3.16 describes procedures and specifications for determining gaseous organic compounds from stationary sources. A gas sample is extracted from the stack at a rate proportional to the stack velocity using one of four techniques: (1) integrated bag sampling, (2) direct interface sampling, (3) dilution interface sampling, and (4) adsorption tube sampling. For the first three techniques, the sample or diluted sample is introduced directly into the sample loop of the gas chromatograph (GC). The measured sample is then carried into the GC column with a carrier gas where the organic compounds are separated. The organic compounds then are each measured quantitatively by the GC detector. The qualitative analysis is made by comparing the retention times (from injection to detection) of known standards to the retention times of the sample compounds. Once sample compounds are identified, quantitative analysis is made by comparing the detector response for the sample compound to a known quantity of corresponding standard. Gas samples collected on adsorption tubes are desorbed from the adsorption media using a solvent. A measured volume of the desorption solution is injected into a heated injection port where the mixture vaporizes and is carried into the GC column with a carrier gas. The sample is separated into the individual components, then qualitatively and quantitatively analyzed in the same manner as a gas sample.

Because of the number of different combinations of sampling, sample preparation, calibration procedures, GC column materials and operating procedures, and GC detectors covered under this method, a set of tables (appearing at the end of the Method Highlights section) has been developed to assist the tester in selecting and the test observer in approving an acceptable sampling and analytical technique. The compounds listed in these tables were selected based on their current status as either presently regulated or being evaluated for future regulations by EPA and state and local agencies. Table A lists selected organic compounds for Method 18 and provides the user with: (1) the Chemical Abstracts (CA) name, any synonyms, the chemical formula, the Chemical Abstracts Service (CAS) number; (2) method classification and corresponding references for more information; and (3) whether EPA currently has an audit cylinder for this compound.[4]

For a given compound, the sampling and analytical techniques described in Tables B, C, D and E are classified in Table A (Status of Selected Organic Compounds for Method 18 Sampling and Analysis Techniques) into one of five classes as follows:

1. Reference (R). This is a method promulgated by EPA as the compliance test method for one or more EPA emission regulations.
2. Tentative (T). This is a method where EPA method development is completed and documented, but the method has not been promulgated.
3. Development (D). This is a method currently under development by EPA.
4. Other (O). This is a method developed and documented by an organization other than EPA.
5. None (N). This is a method that has not been developed or validated but should work based on experience with similar situations.

Table B shows all the sampling techniques described in Method 18. For each compound, each of the allowed sampling techniques is rated either: (1) recommended, (2) acceptable, (3) theoretical, (4) not recommended, or (5) unknown. The rating codes for sampling are based on the extent of method validation. A particular sampling technique is rated based on current EPA methodology. Where EPA methodology does not exist, methodology provided by organizations other than the EPA is used for rating. As an example on how to use Table B, the rating for benzene is "T" for direct interface, "R-12" for Tedlar bags, and "A-9,13" with carbon disul-

fide for adsorbent tubes. This means that for sampling, there is no documented experience with the direct interface method, but in theory it could be valid; a Tedlar bag is recommended as a sampling technique and Reference 12 provides further description; and charcoal tubes using carbon disulfide as the desorption liquid are acceptable and References 9 and 13 provide further description.

Before a final sampling technique is selected, the source tester will need to consider the general strengths and weaknesses of each technique in addition to the guidance provided in Table B. The strengths and weaknesses for the sampling techniques described in Method 18 are as follows:

Direct Interface or Dilution Interface

Strengths:
1. Can immediately determine if analysis is successful.
2. Samples collected are in a form that approximates the form in stack emissions and minimizes the time for degradation through polymerization, condensation, etc.
3. No loss or alteration in compounds due to sampling since a sample collection media (bag or adsorbent) is not used.
4. Method of choice for steady state sources when duct temperature is below 100°C and organic concentrations are suitable for the GC detector.

Weaknesses:
1. GC must be located at the sampling site.
2. A GC equipped with a flame ionization detector (FID) cannot be operated at a sampling site if the presence of the H_2 flame will be hazardous.
3. Cannot sample proportionally or obtain a time integrated sample.
4. Because results represent only instantaneous values, they are not totally indicative of non-steady state processes.

Tedlar Bag

Strengths:
1. Samples collected are in a form that approximates the form in stack emissions.
2. Samples may be returned to the laboratory for GC analysis.
3. Multiple analyses, if necessary, may be performed on each collected sample.
4. Samples can be collected proportionally.

Weaknesses:
1. Unless protected, Tedlar bags are awkward and bulky for shipping back to the laboratory. Caution must be taken to prevent bag leaks.
2. Stability of compound(s) of interest in Tedlar bags with time must be known. (Maximum permissible storage time(s) must be known or determined, and must not be exceeded.)
3. Polar compounds generally should not be collected due to bag adsorption. There are some exceptions (i.e., ethylene oxide).
4. Samples may not be collected when the concentration of any component present is within explosive limits.

Adsorbent Tubes

Strengths:
1. Samples collected are compact and easy to return to the laboratory for analysis.
2. Samples may be returned to the laboratory for GC analysis.
3. Sample storage time generally can be extended to a week by keeping

samples at $0^{o}C$. However, the migration of the collected compound(s) through the charcoal to the backup portion may be a problem.

Weaknesses:
1. Quantitative recovery percentage of each organic compound from the adsorbent material must be known.
2. Breakthrough sample gas volume for organic compounds as present in the source matrix must be known for the adsorbent material.
3. Any effect of moisture (in the stack gas) on the adsorbent material collection capacity must be known. Moisture in the sample above 2 to 3 percent may severely reduce the adsorptive capacity.
4. Generally, samples can be collected conveniently only at a constant rate.
5. Samples must be returned to the lab for analysis.

Table C lists the recommended GC detectors commonly used with Method 18. For each compound, each GC detector is rated either: R - recommended, A - acceptable, T - theoretical, N - not recommended, or U - unknown. A particular GC detector is rated based on current EPA methodology. Where EPA methodology does not exist, methodology provided by organizations other than the EPA is used for rating. As an example on how to use Table C, the rating for benzene is "R-4,12" for a flame ionization detector (FID), "N" for an electron capture detector (ECD), "T-38" for a photoionization detector (PID), and "N" for an electrolytic conductivity detector (ELCD). This means an FID is recommended as the GC detector and References 4 and 12 provide further description, an ECD and an ELCD are not recommended, and there is no documented experience with a PID for benzene, but its use is theoretically possible based on the ionization potential found in Reference 38.

Table D presents information on packed columns suitable for GC analysis of the selected compounds. Items covered include column type and conditions, Kovats Retention Indices (KRI's), if available, and associated literature references. The recommended column appears first, the others are acceptable. Specifically, any column or condition that meets the Method 18 criteria for peak resolution is considered acceptable. A particular GC column is recommended based on current EPA methodology; where EPA methodology does not exist, methodology provided by organizations other than the EPA is used for rating. Kovats Retention Indices were previously used to identify unknown compounds by comparison of the measured KRI(s) for a compound to catalogued KRI's for the various columns. In performing Method 18, KRI's can be useful in selecting a GC column which will effectively separate two (or more) target compounds and/or interferents in an air sample. In Table D, the first number shown for each compound refers to the literature reference for the column and column conditions suggested for the recommended sampling method (when available); the letter(s) associated with this number cross-references the List of Referenced Columns following Table D. Listed next for each compound are the columns and conditions suggested for sampling methods with an acceptable rating; additional references are provided for columns used for analysis of the selected compounds under laboratory conditions. Supplementary references provide KRI's (in parentheses) for certain compounds. As an example of how to use Table D, the entry for benzene is "12-s, t; 9-k; 13-u; 4-p; 39-d(658), e(557), i(1039), h(1104), v(963)." This means that the column described in citations s and t in the Table D List of Referenced Columns was specified in the method described in Reference 12; the column described in citation k in the List of Referenced Columns was specified in the method described in Reference 9; the column described in citation u in the List was specified in the method described in Reference 13; the column described in citation p in the List was specified in the method described in Reference 4; and

the columns described in citations d, e, i, h, and v in the List were specified in the method described in Reference 39. The KRI's for each column under the conditions given in the List are shown in parentheses.

The user should be aware that interfering compounds may exist in source samples. Some method development work, using the required presurvey sample, may be necessary to optimize separation of the compounds of interest from the interfering compounds present in a source sample. As discussed later in Section 3.16.5, any column that will provide an acceptable resolution of the compounds can be used. Only packed columns are described in Table D since these are more commonly available to source test analysts than capillary columns. However, capillary columns are permitted in Method 18 for analysis.

Table E shows the GC calibration preference for each compound based on the technique used for sampling. Where appropriate, the source of calibration standards is also shown. For each compound, the calibration technique shown is rated either: (1) recommended, (2) acceptable, (3) theoretical, (4) not recommended, or (5) unknown. A particular calibration technique is rated based on current EPA methodology. Where EPA methodology does not exist, methodology provided by organizations other than the EPA is used for rating. As an example on how to use Table E, the rating for benzene is "R-12 (1806)" for gas cylinders, "N" for gas injection into a Tedlar bag, "A-12" for liquid injection into a Tedlar bag, "R-9,13" for preparation of the standard in desorption liquid, and "T" for preparation of the standard on an adsorption tube followed by desorption. This means that gas cylinders assayed and certified against National Bureau of Standards (NBS) gaseous Standard Reference Material (SRM) 1806 using EPA Traceability Protocol No. 1 (Reference 5) are recommended as the calibration standard for direct interface and Tedlar bag samples with Reference 12 providing further information on the source of the calibration standard; preparation of calibration standards by gas injection into a Tedlar bag is not recommended; preparation of calibration standards by liquid injection into a Tedlar bag is acceptable and Reference 12 provides further information; preparation of calibration standards in the desorption liquid is the recommended procedure for use with the adsorption tube methods described in References 9 and 13; and preparation of calibration standards on adsorption tubes followed by desorption is theoretically valid for use with adsorption tube samples.

Because the number of organic compounds of interest to EPA and state and local agencies is increasing, and since EPA plans to conduct methods development and validation studies for many of the organic compounds identified here as well as for additional compounds identified in the future, the Method Highlights portion of Section 3.16 will be updated every two or three years. As with all other revisions of Volume III of the Quality Assurance Handbook, those individuals whose names are in the Record Distribution System will automatically receive the updated Method Highlights section.

For compounds not currently listed in the tables, Figure 0.1 may be used as a general guide in selecting appropriate sampling techniques. However, any technique used must meet the criteria described in detail in the subsequent sections.

The Method Description (Sections 3.16.1 to 3.16.9) is based on the detailed specifications in the Reference Method (Section 3.16.10) promulgated by EPA on October 18, 1983 and corrections and revisions promulgated February 19, 1987.[1,2,3]

1. Procurement of Apparatus and Supplies

Section 3.16.1 gives specifications, criteria, and design features for the

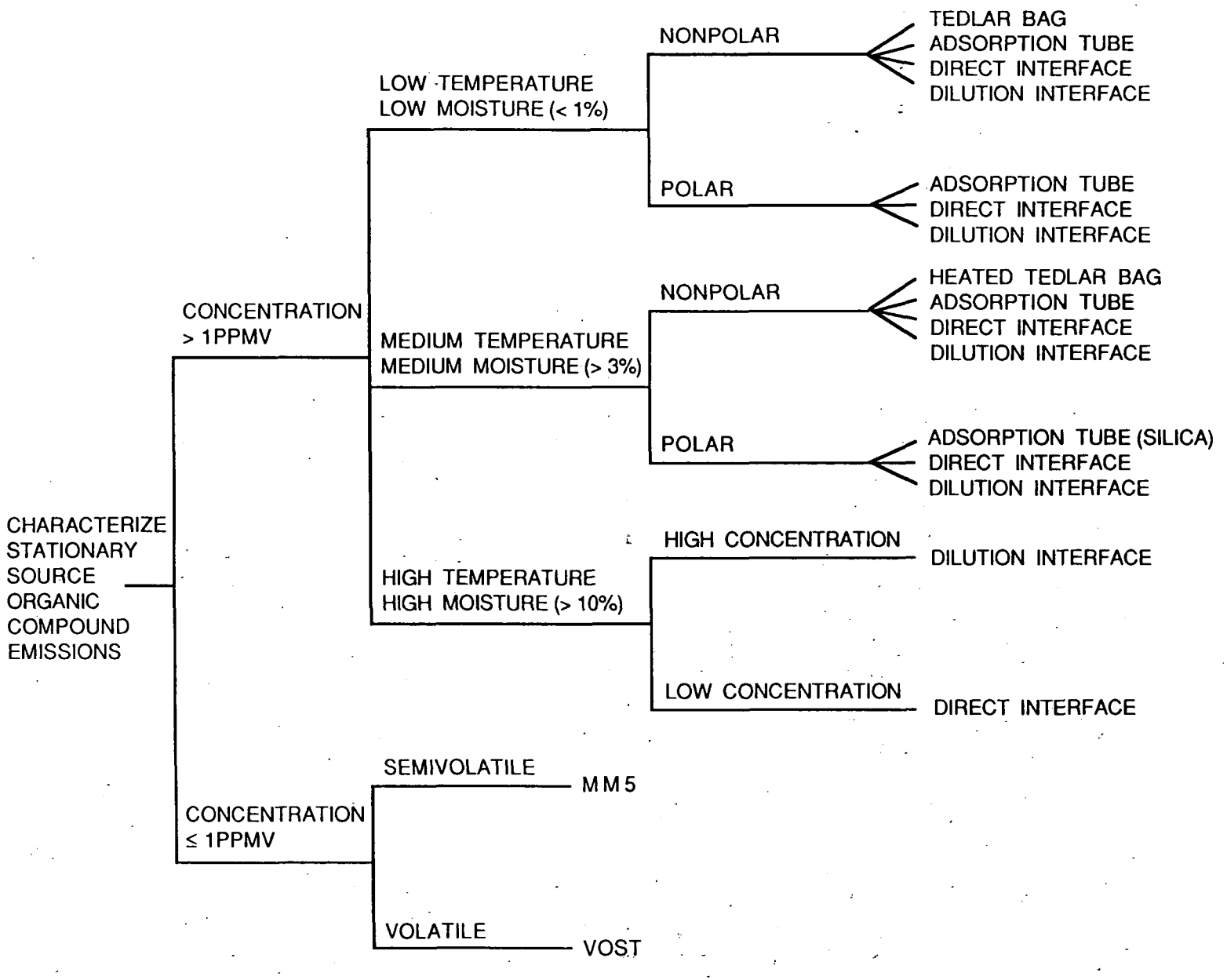

Figure 0.1. General scheme for selection of appropriate sampling techniques.

required equipment and materials. The sampling apparatus for Method 18 is divided according to the different sampling approaches. This section can be used as a guide for procurement and initial checks of equipment and supplies. The activity matrix (Table 1.1) at the end of the section is a summary of the details given in the text and can be used as a quick reference.

2. Presampling Preparations

Section 3.16.2 describes the required calibration procedures for the Method 18 sampling equipment. Section 3.16.3 describes the presampling operations and the acquisition of supplies and equipment needed for the sampling. Preliminary survey sampling is discussed, including a description of classes of organic compounds and the presurvey sampling techniques that are generally used to obtain a sample for evaluation purposes. The presurvey sampling and analytical methods are then described. Finally, how to select the proper sampling and analytical equipment based on the presurvey data is discussed. The preliminary survey and presampling preparation forms (Figures 3.2 and 3.5 of Section 3.16.3) can be used as equipment checklists. Suggestions for packing the equipment and supplies for shipping are given to help minimize breakage and reduce contamination.

Activity matrices for the calibration of equipment and the presampling operations (Tables 2.1 and 3.1) summarize the activities detailed in the text.

3. On-Site Measurements

Section 3.16.4 describes several sampling techniques. The use of the presurvey sample analyses and the sampling matrix tables (Tables A through E) provides the user with the required information to select the proper sampling technique. A checklist (Figure 4.8) is an easy reference for field personnel to use in all sampling activities. Sampling and analyses using the direct interface and the dilution interface methods are both conducted on-site; however, to provide for greater consistency of presentation, the analytical procedures are presented in the Posttest Operations Section with those for the other sampling techniques.

4. Posttest Operations

Section 3.16.5 describes the analytical procedures and the posttest activities for checking the equipment. The initial analytical procedure of sample preparation is shown based on the sampling technique used and includes the procedures for preparation of the calibration standards. The second procedure discussed is the method of introducing a known volume of sample into the GC and this is followed by a discussion of GC operations. The detailed analytical procedures can be removed for use as an easy reference in the laboratory. An activity matrix (Table 5.1) summarizes the postsampling operations.

Section 3.16.6 describes calculations, nomenclature, and significant digits for the data reduction. A programmed calculator is recommended to reduce calculation errors.

Section 3.16.7 recommends routine and preventive maintenance programs. The programs are not required, but their use should reduce equipment downtime.

5. Auditing Procedures

Section 3.16.8 describes performance and system audits. Performance audits for both the analytical phase and the data processing are described. A checklist

(Figure 8.2) outlines a system audit.

Section 3.16.9 lists the primary standards to which the working standards or calibration standards should be traceable.

6. References

Section 3.16.10 contains the promulgated Method; Section 3.16.11 contains the references used throughout this text; and Section 3.16.12 lists all the data forms in Section 3.16 and contains copies of blank data forms for those shown completed in the text. These may be removed from the Handbook, copied, and used in performing the method. Each form has a subtitle [e.g., M18-2.5 (Figure 2.5)] to assist the user in locating the same completed form in the text. Several checklists are not completed in the text and and therefore not reproduced in this section.

TABLE A. STATUS OF SELECTED ORGANIC COMPOUNDS FOR METHOD 18 SAMPLING AND ANALYSIS TECHNIQUES

Chemical Abstracts Name	Synonyms	Formula	CAS No.	Method Class	EPA Audit Cylinder(ppm)*
Alcohols					
Methanol	Methyl Alcohol	CH_4O	(67-56-1)	O-6	30-80
Ethanol	Ethyl Alcohol	C_2H_6O	(64-17-5)	O-7	No
Isopropyl Alcohol	2-Propanol	C_3H_8O	(67-63-0)	O-7	No
n-Propyl Alcohol	1-Propanol	C_3H_8O	(71-23-8)	O-8	No
n-Butyl Alcohol	1-Butanol	$C_4H_{10}O$	(71-36-3)	O-8	No
Alkanes					
Cyclohexane		C_6H_{12}	(110-82-7)	O-9	80-200
Hexane		C_6H_{14}	(110-54-3)	O-9	20-90,1000-3000
Alkenes					
Ethylene	Ethene	C_2H_4	(74-85-1)	N	5-20,300-700
Propylene	Propene	C_3H_6	(115-07-1)	N	5-20,300-700
Dienes					
1,3-Butadiene	Butadiene	C_4H_6	(106-99-0)	D-10	5-60
Hexachlorocyclopentadiene	Perchlorocyclopentadiene	C_5Cl_6	(77-47-4)	O-11	No
Aromatic					
Benzene	Benzol	C_6H_6	(71-43-2)	T-12	5-20,60-400
Mesitylene	1,3,5-Trimethylbenzene	C_9H_{12}	(108-67-8)	N	No
Ethylbenzene		C_8H_{10}	(100-41-4)	O-13	No
Cumene	1-Methylethylbenzene	C_9H_{12}	(98-82-8)	O-13	No
Xylene (m-,o-,p-)	Dimethylbenzene	C_8H_{10}	(1330-20-7)	O-13	5-20,300-700
Toluene	Methylbenzene	C_7H_8	(108-88-3)	O-9,13	5-20,100-700
Styrene	Ethenylbenzene	C_8H_8	(100-42-5)	O-13	No
2-Naphthylamine	2-Naphthylenamine	$C_{10}H_9N$	(91-59-8)	O-14	No
Ketones					
Acetone	2-Propanone	C_3H_6O	(67-64-1)	O-15	No
Methyl Ethyl Ketone	2-Butanone	C_4H_8O	(78-93-3)	O-16	30-80
Methyl Isobutyl Ketone	4-Methyl-2-pentanone	$C_6H_{12}O$	(108-10-1)	O-15	5-20
Epoxides					
Ethylene Oxide	Epoxy Ethane	C_2H_4O	(75-21-8)	O-17	5-20
Propylene Oxide	1,2-Epoxy Propane	C_3H_6O	(75-56-9)	O-18	5-20,75-200
Sulfides					
bis(2-Chloroethyl) Sulfide	Mustard Gas	$C_4H_8Cl_2S$	(505-60-2)	N	No

TABLE A. (Continued)

Chemical Abstracts Name	Synonyms	Formula	CAS No.	Method Class	EPA Audit Cylinder(ppm)*
		Halogenated			
Ethylidene Chloride	1,1-Dichloroethane	$C_2H_4Cl_2$	(5-34-3)	O-19	No
Ethylene Dibromide	1,2-Dibromoethane	$C_2H_4Br_2$	(106-93-4)	O-20	5-20,50-300
Ethylene Dichloride	1,2-Dichloroethane	$C_2H_4C_{12}$	(107-06-2)	T-21	5-20,100-600
Propylene Dichloride	1,2-Dichloropropane	$C_3H_6Cl_2$	(78-87-5)	O-22	3-20,300-700
1,1,1-Trichloroethane	Methylchloroform	$C_2H_3Cl_3$	(71-55-6)	T-21	5-20
Bromodichloromethane		$CHBrCl_2$	(75-27-4)	N	No
Chlorodibromomethane		$CHBr_2Cl$	(124-48-1)	N	No
Chloroform	Trichloromethane	$CHCl_3$	(67-66-3)	T-23	5-20,300-700
Carbon Tetrachloride	Tetrachloromethane	CCl_4	(56-23-5)	T-23	5-20
Dichlorodifluoromethane	Freon 12	CCl_2F_2	(75-71-8)	O-24	No
Methyl Bromide	Bromomethane	CH_3Br	(74-83-9)	O-25	No
Methyl Chloride	Chloromethane	CH_3Cl	(74-87-3)	O-26	No
Methylene Chloride	Dichloromethane	CH_2Cl_2	(75-09-2)	T-27	1-20
Tetrachloroethylene	Perchloroethylene	C_2Cl_4	(127-18-4)	T-21	5-20,300-700
Bromoform	Tribromomethane	$CHBr_3$	(75-25-2)	O-19	No
Trichloroethylene	Trichloroethene	C_2HCl_3	(79-01-6)	T-21	5-20,100-600
Trichlorotrifluoroethane	Freon 113	$C_2Cl_3F_3$	(76-13-1)	T-21	5-20
Vinylidene Chloride	1,1-Dichloroethene	$C_2H_2Cl_2$	(75-35-4)	O-28	5-20,100-600
Ethyl Chloride	Chloroethane	C_2H_5Cl	(75-00-3)	O-29	No
Chlorobenzene	Monochlorobenzene	C_6H_5Cl	(108-90-7)	O-19	5-20
Vinyl Chloride	Chloroethylene	C_2H_3Cl	(75-01-4)	R-30	5-30
1,2-Dibromo-3-chloropropane	DBCP	$C_3H_5Br_2Cl$	(96-12-8)	O-37	No

Method Classification Code
- R = Reference - EPA promulgated method.
- T = Tentative - EPA method development complete; EPA reference available.
- D = Development - EPA method currently under development.
- O = Other - Method development completed by organizations other than EPA; reference available.
- N = None - No reference available; recommendation based on experience.

The codes in the method classification column describe the current status of a sampling and analysis method for each selected compound. For example, the method classification code for benzene is: T-12. This means the current method for benzene is a tenative EPA method with development complete and the reference for the method is citation number 12 in Section 3.16.11.

* The availability of EPA audit cylinders is shown in this column where:

( ) = Audit cylinders for this particular compound are available from EPA in the concentration ranges indicated (Reference 4).

No = Audit cylinders for this particular compound are not available from EPA. The source tester must obtain audit gas cylinders from commercial gas vendors certified by independent analysis to be within 5 percent of the concentration claimed by the vendor.

TABLE B. METHOD 18 SAMPLING TECHNIQUES FOR SELECTED ORGANIC COMPOUNDS

Selected Compounds	Direct Interface	Tedlar Bag*	Adsorbent Tubes and Desorption Liquid: Charcoal*	Other **	Desorption Liquid***
Alcohols					
Methanol	T	N	N	A-6; Silica Gel	Distilled Water
Ethanol	T	N	T-7	-	1% 2-Butanol in CS_2
Isopropyl Alcohol	T	N	T-7	-	1% 2-Butanol in CS_2
n-Propyl Alcohol	T	N	T-8	-	Carbon Disulfide
n-Butyl Alcohol	T	N	T-8	-	Carbon Disulfide
Alkanes					
Cyclohexane	T	U	T-9	-	Carbon Disulfide
Hexane	T	U	T-9	-	Carbon Disulfide
Alkenes					
Ethylene	T	N	U	U	U
Propylene	T	U	U	U	U
Dienes					
1,3-Butadiene	T	A-10	A-41	U	Carbon Disulfide
Hexachlorocyclopentadiene	T	U	N	A-11; Porapak	Hexane
Aromatic					
Benzene	T	R-12	T-9,13	-	Carbon Disulfide
Mesitylene	T	U	U	-	U
Ethylbenzene	T	U	T-13	-	Carbon Disulfide
Cumene	T	U	T-13	-	Carbon Disulfide
Xylene (m-,o-,p-)	T	U	T-13	-	Carbon Disulfide
Toluene	T	U	T-9,13	-	Carbon Disulfide
Styrene	T	U	T-13	-	Carbon Disulfide
2-Napthylamine	T	U	T-14	-	Carbon Disulfide
Ketones					
Acetone	T	N	T-15	-	Carbon Disulfide
Methyl Ethyl Ketone	T	N	N	A-16; Ambersorb	Carbon Disulfide
Methyl Isobutyl Ketone	T	N	T-15	-	Carbon Disulfide
Epoxides					
Ethylene Oxide	T	A	T-17	-	99:1 Benzene:CS_2
Propylene Oxide	T	U	T-18	-	Carbon Disulfide
Sulfides					
bis(2-Chloroethyl) Sulfide	T	U	U	U	U

(continued)

TABLE B. (Continued)

Selected Compounds	Direct Interface	Tedlar Bag*	Adsorbent Tubes and Desorption Liquid: Charcoal*	Other **	Desorption Liquid***
Halogenated					
Ethylidene Chloride	T	U	T-19	-	Carbon Disulfide
Ethylene Dibromide	T	N-31	T-20	-	99:1 Benzene:MeOH
Ethylene Dichloride	T	R-21	T-19	-	Carbon Disulfide
Propylene Dichloride	T	U	T-22	-	15% Acetone in Cyclohexane
1,1,1-Trichloroethane	T	R-21	T-19	-	Carbon Disulfide
Bromodichloromethane	T	U	U	-	U
Chlorodibromomethane	T	U	U	-	U
Chloroform	T	R-23	T-19	-	Carbon Disulfide
Carbon Tetrachloride	T	R-23	T-19	-	Carbon Disulfide
Dichlorodifluoromethane	T	U	T-24	-	Methylene Chloride
Methyl Bromide	T	U	T-25	-	Carbon Disulfide
Methyl Chloride	T	U	T-26	-	Methanol
Methylene Chloride	T	R-27	T-32	-	Carbon Disulfide
Tetrachloroethylene	T	R-21	T-33	-	Carbon Disulfide
Bromoform	T	U	T-19	-	Carbon Disulfide
Trichloroethylene	T	R-21	T-34	-	Carbon Disulfide
Trichlorotrifluoroethane	T	R-21	T-35	-	Carbon Disulfide
Vinylidene Chloride	T	U	T-28	-	Carbon Disulfide
Ethyl Chloride	T	U	T-29	-	Carbon Disulfide
Chlorobenzene	T	U	T-19	-	Carbon Disulfide
Vinyl Chloride	T	R-30	T-36	-	Carbon Disulfide
1,2-Dibromo-3-chloropropane	T	U	T-37	-	Carbon Disulfide

Rating Code

R = Recommended. Based on actual source tests experience (sampling and analysis) this method is valid and is the method of choice among Method 18 users.

A = Acceptable. Based on actual source tests or similar source test experience (sampling and analysis), this method is valid. The tester must evaluate for specific test.

T = Theoretical. Method has no documented experience, but in theory could be valid.

N = Not Recommended. Based on actual source tests or similar source test experience and/or theory, this method is invalid.

U = Unknown. Method has no documented experience and the theoretical aspects of sampling by this method are inconclusive. The tester must demonstrate that this sampling method is valid.

The rating codes for sampling are based on the extent of method validation. For example, the rating code for benzene is: T; R-12; A-9,13. This means that direct interface is theoretically possible for benzene, but no documented experience has been found; Tedlar bags are the recommended sampling method for benzene by the tenative EPA method referenced in citation 12 in Section 3.16.11; and sampling with charcoal adsorption tubes is acceptable following the two methods referenced in citations 9 and 13 in Section 3.16.11.

* = If condensibles exist, use the procedure described in Section 3.16.4.

** = Solid sorbents other than charcoal recommended.

*** = The recommended desorption solution is given in this column. Analyst should consult the appropriate reference for details.

TABLE C. GC DETECTORS FOR SELECTED ORGANIC COMPOUNDS BY METHOD 18

Selected Compounds	Gas Chromatograph Detector *			
	FID	ECD	PID	ELCD
Alcohols				
Methanol	R-4,6	N	T-38	N
Ethanol	R-7	N	T-38	N
Isopropyl Alcohol	R-7	N	T-38	N
n-Propyl Alcohol	R-8	N	T-38	N
n-Butyl Alcohol	R-8	N	T-38	N
Alkanes				
Cyclohexane	R-4,9	N	T-38	N
Hexane	R-4,9	N	T-38	N
Alkenes				
Ethylene	A-4	N	T-38	N
Propylene	A-4	N	T-38	N
Dienes				
1,3-Butadiene	R-4,10,41	N	T-38	N
Hexachlorocyclopentadiene	R-11	T	U	T
Aromatic				
Benzene	R-4,12	N	T-38	N
Mesitylene	T	N	T-38	N
Ethylbenzene	R-13	N	T-38	N
Cumene	R-13	N	T-38	N
Xylene (o-,m-,p-)	R-4,13	N	T-38	N
Toluene	R-4,9,13	N	T-38	N
Styrene	R-13	N	T-38	N
2-Napthylamine	R-14	N	U	N
Ketones				
Acetone	R-15	N	T-38	N
Methyl Ethyl Ketone	R-4,16	N	T-38	N
Methyl Isobutyl Ketone	R-4,15	N	T-38	N
Epoxides				
Ethylene Oxide	R-4,17	N	T-38	N
Propylene Oxide	R-4,18	N	T-38	N
Sulfides				
bis(2-Chloroethyl) Sulfide	U	U	U	U

(continued)

TABLE C. (Continued)

Selected Compounds	Gas Chromatograph Detector *			
	FID	ECD	PID	ELCD
Halogenated				
Ethylidene Chloride	R-19	T	U	T
Ethylene Dibromide	A-4	R-20	U	T
Ethylene Dichloride	R-4,21	T	T-38	T
Propylene Dichloride	A-4	T	T-38	R-22
1,1,1-Trichloroethane	R-4,21	T	U	T
Bromodichloromethane	U	T	U	T
Chlorodibromomethane	U	T	U	T
Chloroform	R-4,23	T	T-38	A-23
Carbon Tetrachloride	R-4,23	T	T-38	A-23
Dichlorodifluoromethane	R-24	T	N-38	T
Methyl Bromide	R-25	T	T-38	T
Methyl Chloride	R-26	T	T-38	T
Methylene Chloride	R-4,27,32	T	T-38	T
Tetrachloroethylene	R-4,21	T	T-38	T
Bromoform	R-19	T	T-38	T
Trichloroethylene	R-4,21	T	T-38	T
Trichlorotrifluoroethane	R-4,21	T	N-38	T
Vinylidene Chloride	R-4,28	T	T-38	T
Ethyl Chloride	R-29	T	T-38	T
Chlorobenzene	R-4,19	T	T-38	T
Vinyl Chloride	R-4,30	T	T-38	T
1,2-Dibromo-3-chloropropane	U	R-37	U	T

Rating Code

R = Recommended. Based on actual source tests experience (sampling and analysis) this method is valid an is the method of choice among Method 18 users.

A = Acceptable. Based on actual source tests or similar source test experience (sampling and analysis), this method is valid. The tester must evaluate for specific test.

T = Theoretical. Method has no documented experience, but in theory could be valid.

N = Not Recommended. Based on actual source tests or similar source test experience and/or theory, this method is invalid.

U = Unknown. Method has no documented experience and the heoretical aspects are not conclusive. The tester must demonstrate that this detection method is valid.

The rating codes for GC detectors are based on the detector specified in the method that is referenced. For example, the rating code for benzene is: R-4,12; N; T-38; N. This means that the FID is recommended for detection of benzene by both references 4 and 12 cited in Section 3.16.11; the ECD and the ELCD are not recommended for benzene; and detection of benzene with a PID is theoretically possible based on the ionization potential found in reference 38.

* The following abreviations are used for the gas chromatography detectors:

FID = Flame Ionization Detector
ELCD = Electroconductivity Detector (Hall Detector)
ECD = Electron Capture Detector
PID = Photoionization Detector (with lamps up to 11.7 electron volts)

TABLE D. PACKED COLUMNS SUITABLE FOR ANALYSIS OF SELECTED ORGANIC COMPOUNDS BY GAS CHROMATOGRAPHY

Selected Compounds	Column Reference, Type and Conditions, and Kovats Retention Indices*
Alcohols	
Methanol	6-a; 4-b, c; 39-d(370), e(331), f(426)
Ethanol	7-g
Isopropyl Alcohol	7-g; 39-d(477), e(396), f(576), h(1047), i(1046)
n-Propyl Alcohol	8-j; 39-e(387), f(533)
n-Butyl Alcohol	8-j; 39-d(649)
Alkanes	
Cyclohexane	9-k; 4-l; 39-d(667), e(511), f(619)
Hexane	9-k; 4-m; 39-d(600), e(600), f(600)
Alkenes	
Ethylene	4-n
Propylene	4-n
Dienes	
1,3-Butadiene	10-o; 4-p, q, 41-nnn
Hexachlorocyclopentadiene	11-r
Aromatic	
Benzene	12-s, t; 9-k; 13-u; 4-p; 39-d(658), e(557), i(1039), h(1104), v(963)
Mesitylene	
Ethylbenzene	13-u; 4-d(869), e(573), i(1281)
Cumene	13-u; 4-i(1318)
Xylene (o-,m-,p-)	13-w; 4-x; 39-d(m = 876, p = 877, o = 900), i(m = 1297, p = 1312, o = 1353)
Toluene	9-k; 13-w; 4-p; 39-d(761), h(1136), i(1201), v(1060)
Styrene	13-w; 39-i(1419)
2-Napthylamine	14-y
Ketones	
Acetone	15-z; 4-e(380), f(636), h(1009), h(1091)
Methyl Ethyl Ketone	16-aa; 4-bb; 39-d(579), e(476), f(644), h(1087), i(1158), v(927)
Methyl Isobutyl Ketone	15-z; 4-cc; 39-d(722)
Epoxides	
Ethylene Oxide	17-dd; 4-ee; 40-mmm
Propylene Oxide	18-ff; 4-ee
Sufides	
bis(2-Chloroethyl) Sulfide	

(continued)

TABLE D. (Continued)

Selected Compounds	Column Reference, Type and Conditions, and Kovats Retention Indices*
	Halogenated
Ethylidene Chloride	19-gg; 39-d(565), e(427), f(604), h(940), i(994), v(896)
Ethylene Dibromide	20-hh; 4-(hhh)
Ethylene Dichloride	21-ii; 19-jj; 4-l; 39-d(636), e(460), f(666), h(1131), i(1205), v(1078)
Propylene Dichloride	22-kk; 4-(vv)
1,1,1-Trichloroethane	21-ii; 19-jj; 4-oo; 39-e(568), v(897)
Bromodichloromethane	
Chlorodibromomethane	
Chloroform	23-ll; 19-mm; 4-iii; 39-d(606), e(443), f(625), h(1022), i(1090), v(1025)
Carbon Tetrachloride	23-ll; 19-nn; 4-oo; 39-d(665), e(502), f(553), h(897), i(938), v(893)
Dichlorodifluoromethane	24-pp
Methyl Bromide	25-qq
Methyl Chloride	26-rr
Methylene Chloride	27-ss,lll; 32-tt; 4-oo; 39-d(516), h(956), i(1013), v(934)
Tetrachloroethylene	21-ii; 33-uu; 4-vv; 39-d(813), e(574), f(736), h(1056), i(1105), v(1039)
Bromoform	19-ww
Trichloroethylene	21-ii; 34-xx; 4-l; 39-d(695), e(546), f(665), h(1009), i(1068), v(1004)
Trichlorotrifluoroethane	21-ii; 35-yy; 4-oo
Vinylidene Chloride	28-zz; 4-jjj; 39-h(760), i(792), v(738)
Ethyl Chloride	29-ll
Chlorobenzene	19-bbb; 4-kkk; 39-d(842), h(1347)
Vinyl Chloride	30-ccc, ddd; 36-eee; 4-fff
1,2-Dibromo-3-chloropropane	37-ggg

* The GC column references, column types and conditions, and Kovats Retention Indices (if available) are shown in this column. The first reference shown for each compound is for the column and conditions suggested for the recommended sampling method (when available), followed by the column and conditions suggested for sampling methods with an acceptable rating. Additional references are given when available for columns used for analysis of the selected compound under laboratory conditions. Some additional references provide Kovats Retention Indices for selected compounds. For example, the reference code for benzene is: 12-s, t; 9-k; 13-u; 4-p; 39-d(658), e(557), i(1039), h(1104), v(963). This means that for benzene the columns described in citations s and t in the List of Referenced Columns (following Table D) were specified in the method described in citation 12 in Section 3.16.11; the column described in citation k in the List of Referenced Columns was specified in the method described in citation 9 in Section 3.16.11; the column described in citation u was specified in the method descibed in citation 13 in Section 3.16.11; the column described in citation p was specified in the method described in citation 4 in Section 3.16.11; and the columns described in citations d, e, i, h,and v were specified in the method described in citation 39 in Section 3.16.11. Where available, the Kovats Retention Indices for each of the columns under the conditions given in their respective references are given in parentheses.

Note: Any column or conditions that meet the Method 18 criteria for peak resolution are considered acceptable.

APPENDIX I to TABLE D.

LIST OF REFERENCED COLUMNS WITH SUGGESTED OPERATING CONDITIONS

(a). 60/80 mesh Tenax, operated isothermally at 80°C.
(b). Chromasorb 101, operated isothermally at 50°C.
(c). 0.2% Carbowax 1500/0.1% SP-2100 on Carbopack C, operated isothermally at 60°C.
(d). 20% SP-2100/0.1% Carbowax 1500 on 100/200 mesh Supelcoport, operated isothermally at 70°C.
(e). Carbopak C-HT 80/100 mesh, operated isothermally at 90°C.
(f). Porapak T 80/100 mesh, operated isothermally at 140°C.
(g). 0.2% Carbowax 1500 on 60/80 mesh Carbopack C, temperature programmed from 65° to 70°C.
(h). 15% tetracyanoethylated pentaerythritol on 60/80 mesh Chromasorb P-AW, operated isothermally at 80°C.
(i). 15% tetracyanoethylated pentaerythritol on 60/80 mesh Chromasorb P-AW, operated isothermally at 100°C.
(j). 10% SP-1000 on 80/100 mesh Chromasorb WHP, temperature programmed from 75°C.
(k). 20% SP-2100 on 80/100 mesh Supelcoport, operated isothermally at 40° or 70°C or temperature programmed from 50°C, depending on other analytes of interest. See referenced method for details.
(l). 10% OV-101 on Chromasorb WHP, operated isothermally at 100°C.
(m). 10% OV-101 on Chromasorb WHP, operated isothermally at 60° or 100°C.
(n). Durapak n-octane on Porasil C, operated isothermally at 30°C.
(o). 1% SP-1000 on Carbopack B, operated isothermally at 55°C for 12 minutes.
(p). 10% OV-101 on Chromasorb WHP, operated isothermally at 60°C.
(q). 0.1% SP-1000 on Carbopack C, operated isothermally at 90°C.
(r). 3% OV-1 on 100/120 Gas Chrom Q, operated isothermally at 135°C.
(s). For benzene in the presence of aliphatics, 10% 1,2,3-tris (2-cyanoethoxy) propane (TCEP) on 80/100 Chromasorb P AW.
(t). For benzene with separation of xylene isomers, 5% SP-1200/1.75% Bentone 34 on 100/120 mesh Supelcoport, operated isothermally at 75°C.
(u). 10% OV-275 on 100/120 mesh Chromasorb W-AW, operated isothermally at 50°C or temperature programmed starting at 50°C for 3 minutes followed by 15°C/min increase to 200°C.
(v). 10% FFAP on 80/100 Acid-washed Chromasorb W, operated isothermally at 125°C.
(w). 10% OV-275 on 100/120 mesh Chromasorb W-AW, operated isothermally at 50° or 100°C or temperature programmed starting at 50°C for 3 minutes followed by 15°C/min increase to 200°C.
(x). For meta-xylene, 10% OV-101 on Chromasorb WHP, operated isotheramlly at 60°, 120°, or 140°C.
(y). 3% OV-225 on 80/100 mesh Supelcoport, operated isothermally at 163°C.
(z). 10% SP-2100/0.1% Carbowax 1500 on 100/120 mesh Supelcoport, temperature programmed from 50° to 170°C at 10°C/min.
(aa). 20% SP-2100/0.1% Carbowax 1500 on 100/120 mesh Supelcoport, operated isothermally between 55° and 75°C.
(bb). Chromasorb 101, operated isothermally at 180°C.
(cc). 0.1% SP-1000 on Carbopack C, operated isothermally at 180°C.
(dd). 50/80 mesh Porapak Q, operated isothermally at 135°C.

(continued)

APPENDIX I to TABLE D. (Continued)

(ee). 80/100 mesh Porapak QS, operated isothermally at 150°C.
(ff). 50/80 mesh Porapak Q, operated isothermally at 145°C.
(gg). 10% SP-1000 on 80/100 mesh Supelcoport, operated isothermally at 50°C.
(hh). 3% OV-210 on 80/100 mesh Gas Chrom Q, operated isothermally at 50°C.
(ii). 20% SP-2100/0.1% Carbowax 1500 on 100/200 mesh Supelcoport, operated isothermally at 100°C.
(jj). 10% SP-1000 on 80/100 mesh Supelcoport, operated isothermally at 70°C.
(kk). 3% Carbowax 1500 on 60/80 mesh Chromasorb WHP, operated isothermally at 50°C.
(ll). 1% SP-1000 on Carbopack B, operated isothermally at 120°C.
(mm). 10% SP-1000 on 80/100 mesh Supelcoport, operated isothermally at 75°C.
(nn). 10% SP-1000 on 80/100 mesh Supelcoport, operated isothermally at 60°C.
(oo). 10% SP-1000 on 80/100 mesh Supelcoport, operated isothermally at 100°C.
(pp). 80/100 mesh Chromasorb 102, operated isothermally at 110°C.
(qq). 10% FFAP on 100/120 mesh Chromasorb WHP, operated isothermally at 65°C.
(rr). 80/100 mesh Chromasorb 102, operated isothermally at 100°C.
(ss). 5% OV-101 on 80/100 Chromasorb WAP, operated isothermally at 35°C.
(tt). 10% SP-1000 on 80/100 mesh Supelcoport, operated isothermally between 60° and 90°C.
(uu). 10% OV-101 on 100/120 mesh Supelcoport, operated isothermally at 90°C.
(vv). 10% OV-101 on Chromasorb WHP, operated isothermally at 50° or 100°C.
(ww). 10% SP-1000 on 80/100 mesh Supelcoport, operated isothermally at 130°C.
(xx). 10% OV-101 on 100/120 mesh Supelcoport, operated isothermally at 70°C.
(yy). 50/80 mesh Porapak Q, operated isothermally at 150°C.
(zz). 100/120 mesh Durapack OPN in silanized glass, operated isothermally at 65°C.
(aaa). 10% FFAP on 100/120 mesh Chromasorb WHP, operated isothermally at 110°C.
(bbb). 10% SP-1000 on 80/100 mesh Supelcoport, operated isothermally at 105°C.
(ccc). 80/100 mesh Chromasorb 102, operated isothermally at 100°C.
(ddd). For sources where acetaldehyde is present, use column cited in (ccc) followed by a column of 20% GE SF-96 on 60/80 mesh Chromasorb P AW or 80/100 mesh Porapak T connected in series, operated isothermally at 120°C.
(eee). 10% SE-30 on 80/100 Chromasorb W, operated isothermally at 60°C.
(fff). 0.4% Carbowax on Carbopack C, operated isothermally at 50°C.
(ggg). 1.5 OV-17 plus 1.95% OV-210.
(hhh). 5% OV-101 on Chromasorb WHP, operated isothermally at 60°C.
(iii). 10% OV-101 on Chromasorb WHP, operated isothermally at 50° or 100°C.
(jjj). 10% OV-101 on Chromasorb WHP, operated isothermally at 100°C or 10% SP-2100 on Supelcoport, operated isothermally at 100°C.
(kkk). 10% SP-1000 on 80/100 mesh Supelcoport, operated isothermally at 150°C.
(lll). 1% SP-1000 on 60/80 mesh Carbopack, temperature programmed starting at 40°C for 3 minutes, followed by 8°C/min increase to 200°C.
(mmm). 15% FFAP on Anakrom A.
(nnn). 10% FFAP on 80/100 mesh Chromosorb W AW-DMCS, operated isothermally at 52°C.

TABLE E. RECOMMENDED CALIBRATION TECHNIQUES FOR SELECTED ORGANIC COMPOUNDS BY METHOD 18

	Methods for Direct Interface and Tedlar Bag Samples			Methods for Adsorption Tube Samples	
Selected Compounds	Gas Cylinders	Gas Injection into Tedlar Bag	Liquid Injection into Tedlar Bag	Prepare Standard in Desorption Liquid	Prepare Standard on Tube and Desorb
Alcohols					
Methanol	T-4	N	U	R-6	T
Ethanol	U	N	U	R-7	T
Isopropyl Alcohol	U	N	U	R-7	T
n-Propyl Alcohol	U	N	U	R-8	T
n-Butyl Alcohol	U	N	U	R-8	T
Alkanes					
Cyclohexane	T-4	N	U	R-9	T
Hexane	T-4	N	U	R-9	T
Alkenes					
Ethylene	T-4	U	N	U	U
Propylene	T-4	U	N	U	U
Dienes					
1,3-Butadiene	A-10	R-10	N	R-41	U
Hexachlorocyclopentadiene	U	N	U	R-11	T
Aromatics					
Benzene	R-12(SRM 1806)	N	A-12	R-9,13	T
Mesitylene	U	N	U	U	U
Ethylbenzene	U	N	U	R-13	T
Cumene	U	N	U	R-13	T
Xylene (m-,o-,p-)	T-4	N	U	R-13	T
Toluene	T-4	N	U	R-9,13	T
Styrene	U	N	U	R-13	T
2-Napthylamine	U	U	U	R-14	T
Ketones					
Acetone	U	N	U	R-15	T
Methyl Ethyl Ketone	T-4	N	U	R-16	T
Methyl Isobutyl Ketone	T-4	N	U	R-15	T
Epoxides					
Ethylene Oxide	T-4	U	N	R-17	T
Propylene Oxide	T-4	U	N	R-18	T
Sulfides					
bis(2-Chloroethyl) Sulfide	U	U	U	U	U

(continued)

TABLE E. (Continued)

Selected Compounds	Methods for Direct Interface and Tedlar Bag Samples			Methods for Adsorption Tube Samples	
	Gas Cylinders	Gas Injection into Tedlar Bag	Liquid Injection into Tedlar Bag	Prepare Standard in Desorption Liquid	Prepare Standard on Tube and Desorb
Halogenated					
Ethylidene Chloride	U	N	U	R-19	T
Ethylene Dibromide	T-4	N	N-31	R-20	T
Ethylene Dichloride	R-21	N	A-21	R-19	T
Propylene Dichloride	T-4	N	U	R-22	T
1,1,1-Trichloroethane	R-21	N	A-21	R-19	T
Bromodichloromethane	U	U	U	U	U
Chlorodibromomethane	U	U	U	U	U
Chloroform	R-23	N	A-23	R-19	T
Carbon Tetrachloride	R-23	N	A-23	R-19	T
Dichlorodifluoromethane	U	U	N	R-24	T
Methyl Bromide	U	U	N	R-25	T
Methyl Chloride	U	U	N	R-26	T
Methylene Chloride	R-21	N	A-21	R-32	T
Tetrachloroethylene	R-21(SRM 1809)	N	A-21	R-33	T
Bromoform	U	N	U	R-19	T
Trichloroethylene	R-21	N	A-21	R-34	T
Trichlorotrifluoroethane	R-21	N	A-21	R-35	T
Vinylidene Chloride	T-4	N	U	R-28	T
Ethyl Chloride	U	N	U	R-29	T
Chlorobenzene	T-4	N	U	R-19	T
Vinyl Chloride	R-30	A-30	N	R-36	T
1,2-Dibromo-3-chloropropane	U	N	U	R-37	T

Rating Code

R = Recommended. Based on actual source test experience (sampling and analysis) this method is valid and is the method of choice among Method 18 users.

A = Acceptable. Based on actual source tests or similar source test experience (sampling and analysis), this method is valid. The tester must evaluate for specific test.

T = Theoretical. Method has no documented sampling and analysis experience, but in theory could be valid.

N = Not Recommended. Based on actual source tests or similar source test experience and/or theory, this method is invalid.

U = Unknown. Method has no documented experience and the theoretical aspects are not conclusive. The tester must demonstrate that this calibration method is valid.

The rating codes for calibration procedures are based on procedures specified in applicable sampling and/or analytical methods. For example, the rating code for benzene is: R-12(SRM 1806); N; A-12; R-9,13; T. This means that for benzene, the recommended calibration procedure for direct interface and Tedlar bag samples involves the use of gas cylinders with the procedures described in citation 12 in Section 3.16.11 and Standard Reference Material 1806 (available from the National Bureau of Standards, Gaithersburg, MD); calibration standards for benzene prepared by gas injection into Tedlar bags is not recommended; calibration standards prepared by liquid injection into Tedlar bags is acceptable following the procedures described in citation 12 in Section 3.16.11; preparation of calibration standards in desorption liquid is the recommended procedure for the adsorption tube methods described in citations 9 and 13 in Section 3.16.11; preparation of calibration standards on adsorption tubes followed by desorption is theoretically valid for use with adsorption tube samples.

1.0 PROCUREMENT OF APPARATUS AND SUPPLIES

For Method 18, a number of different sampling and analytical procedures are considered acceptable for the identification and measurement of the majority of gaseous organic compounds emitted from industrial sources. Persons attempting to apply these procedures are advised to consult the tables presented in the Method Highlights Section. The Method Highlights Section is intended to provide guidance, based on current EPA methodology, for selection of the most suitable sampling and analytical protocols for organic compounds of interest to Federal, State, and local agencies. For situations where EPA methodology is not applicable, guidance for selection of sampling and analytical protocols based on methodology from other reputable organizations is provided. Once a suitable sampling and analytical protocol has been selected, then procurement of the necessary apparatus and supplies can begin.

A number of the sampling and analytical methodologies covered by Method 18 are common to both presurvey sampling and analysis and final sampling and analysis. Presurvey sample collection can employ either glass sampling flasks (not employed for final sampling), Tedlar bags, or adsorption tubes. Apparatus to determine the moisture content, temperature, and static pressure of the source emissions may be required during presurvey sampling if this information is not available from plant personnel. Method 18 also describes several different calibration techniques for use depending on the available calibration materials and the sampling and analytical techniques used. Confirmation of target compounds in presurvey samples may require analysis by means other than GC alone, such as GC/mass spectrometry (GC/MS) or GC/infrared spectrometry (GC/IR). For the final sampling, in addition to Tedlar bags and adsorption tubes, direct interface sampling and dilution interface sampling are described. Analysis of the final samples utilizes the procedures developed and optimized during presurvey sample analysis.

The descriptions of the apparatus and supplies that follow apply to items needed for both presurvey and final sampling and analysis, except as noted. As described above, all of the following equipment may not be required. The following procedures and descriptions are only provided as guidance to the tester and are not requirements of the method. Table 1.1 at the end of this section contains a summary of quality assurance activities for procurement and acceptance of apparatus and supplies.

1.1 Sampling

Guidance for the selection of a suitable sampling technique for a particular compound can be found in Table B of the Method Highlights Section.

1.1.1 *All Sampling Procedures* - The following apparatus will be required for all presurvey and final sampling procedures. Use of alternative equipment requires the approval of the Administrator.

Sampling System Check - Because of the number of sampling systems, volatile organic compounds, and process operating conditions, the exact criteria for checking the sampling system can only be determined using the presurvey sampling data. Upon receipt of all the components to construct the sampling system, the system should be assembled and checked over the intended range of use (i.e., sample flow rate, duct temperatures).

Sampling Probe - The sampling probe should (1) be constructed of stainless steel, Pyrex glass, or Teflon tubing, (2) exhibit an outside diameter (OD) of 6.4 mm, (3) be enlarged at the duct end to contain a glass wool plug, and (4) possess a heating system capable of maintaining the sample temperature at 0° to 3°C above duct temperature. The expanded section of the probe must be packed with glass wool prior to sampling. The probe outlet must have a fitting suitable for attachment to the sample line. A probe approximately 1.1 m (4 ft) long is usually sufficient; the exact length can be determined during the preliminary survey. The selected probe material should be nonreactive toward with the sample gas constituents so that it will not bias the analysis, as well as appropriate to withstand the duct temperature.

Upon receiving a new probe, visually check it for adherence to specifications (i.e., the length and composition ordered). Check for breaks, cracks, and leaks. Leak check the probe and check the probe heating system during the sampling system check described above. The probe should be able to maintain the required temperature at the desired flow rate and remain leak free.

Sample Line and Connecting Tubing - The sample line is generally 6.4-mm OD Teflon tubing. Sample lines will require heat-tracing to prevent condensation of sample constituents during sampling at some sources. The sample temperature must be maintained at 0°C to 3°C above the source temperature. The capacity of the heating system should be sufficient for its intended use. Upon receipt or during the system check, the sample line should be checked to ensure that it is leak free and will maintain the desired temperature at the desired flow rate. It should be noted that heat-traced sample lines require a significant amount of electrical current to maintain the higher temperature levels. The electrical requirements and the weight of the heat-traced line should be taken into account when designing the sample train.

Quick Connects - For connections on the sample lines, gas sampling valve, the pump unit, cylinders, sample bags, and calibration gas bags, quick connects or the equivalent are needed. When the connects come into contact with the sample gas, they should be constructed of stainless steel. It is also useful to have self-sealing quick connects on the sampling bags. The quick connects can be leak checked during the system check.

Barometer - A mercury, aneroid, or other barometer capable of measuring atmospheric pressure to within 2.5 mm (0.1 in.) Hg may be used; however, in many cases the absolute barometric pressure can be obtained from a nearby weather service station. If the elevation of the sampling point is higher than that of the weather station, the reported barometric pressure is reduced at a rate of 2.5 mm Hg/30 m (0.1 in. Hg/100 ft) of elevation difference; if the sampling point is lower than the weather station, the pressure is increased at the same rate. Note: The barometric pressure from the weather service station should not be corrected to sea level.

Check the field barometer against a mercury-in-glass barometer (or its equivalent). If the field barometer cannot be adjusted to agree with the mercury-in-glass barometer, it is not acceptable and should be repaired or replaced.

Moisture Determination - A moisture determination may be required. Two techniques can generally be used: (1) Method 4 or (2) wet bulb/dry bulb thermometers. If Method 4 is used, the tester should refer to Section 3.3 of this Handbook. If the wet bulb/dry bulb thermometers are used, both thermometers should

be accurate to within 1°C. Upon receipt, the thermometers should be checked against a mercury-in-glass thermometer to ensure that they are reading properly.

Flow Rate Determination - The flow rate in the duct may have to be determined for some emission standards. If the flow rate is to be determined, the tester should refer to Section 3.1 of this Handbook and meet the requirements and follow the procedures of this method.

1.1.2 *Glass Sampling Flask Sampling Technique* - The following apparatus and reagents will be required for the collection of samples (presurvey only) using glass sampling flasks. Use of alternative equipment requires the approval of the Administrator.

Purged or Evacuated Glass Sampling Flasks - Presurvey samples can be collected in precleaned double ended glass sampling flasks possessing minimum capacities of 250 ml. Teflon stopcocks, without grease, are preferred. Upon receipt, flasks should be checked to ensure that they are not broken. Flasks must be cleaned prior to use. The cleaning procedures are described later in Subsection 3.2. If the flasks do not meet these requirements, replace or reclean.

1.1.3 *Tedlar Bag/Evacuated Container and Adsorption Tube Sampling* - The following apparatus will be required for the collection of presurvey or final samples using adsorption tubes or Tedlar bags housed in evacuable containers. If the apparatus are purchased separately, each item should be checked individually as described below. Following this, all components should be assembled, as they will be used in the field and then checked using the following procedures:

1. Assemble the sample train as described in Subsection 4.3.1.
2. Leak check the train as described in Subsection 4.3.1.
3. Attach a primary gas test meter to the inlet of the sample train and pull the desired flow rate through the sample train for the typical sample run time. The measured volume should be within 10% of the calculated volume or rate. If the system does not meet these requirements, replace or repair and then recalibrate.

Tedlar Bags (For Sampling and to Prepare Gaseous Calibration Standards)- Bags used to collect field samples and prepare gaseous calibration standards must be constructed of a suitable material, be leak free, and have the proper fittings. Typically, self-sealing quick disconnects are used on the sample bags. Tedlar is the material of choice for the sample bags, however other materials may be used successfully. If the sample bags are constructed by the tester, they are generally double-sealed. The exact bags to be used in the field test or for making calibration standards must pass three criteria as follows:

1. Bags must pass the leak check as described in Subsection 4.3.1.
2. The organic components that are to be collected in the bags should be placed in a bag at about the same concentration for which it will be used, and the organic concentration in the bag determined as soon as possible after this. The organics should then remain in the bag for a period equal to the time anticipated between field sampling and analysis. The concentration, upon reanalysis, must be within 10% of the original concentration.
3. Next, the bag should be emptied and refilled with zero air or nitrogen. It should be allowed to sit for at least 2 hours and then be reanalyzed; the concentration of the organic(s) in the bag must be

less than 10% of the original concentration.
If the bags do not pass the leak check, they must be reconstructed. If they do not pass the second and third criteria, a different material of construction or a different sampling technique must be used. If the bags do not meet these requirements, replace, use an alternative technique or use a different sampling technique.

Rigid Leak-Proof Container - Rigid leak-proof containers must be of the proper size to fit the bags and are generally made of rigid plastic. However, the material of construction is typically not important since the container does not come into contact with the sample gas. Containers usually have a clear top or window in them to check that the bag does not overfill during testing. The top of the container must have connections to attach the sample probe to the outside and the sample bag to the inside. A connection for the sample pump must also be available on the container. Upon receipt or construction of the container, assemble the system as it will be used in the field and then leak check it at the maximum vacuum anticipated. Inflate a bag to the degree it will be filled in the field and check that the bag can be removed after it has been filled to allow external heating. If the bag system is designed to keep the bag at a specified temperature, then the heating system must be checked as described below in Subsection 1.1.6. If the container does not meet these requirements, modify, repair, or replace it.

Pump - For the indirect sampling technique (pump after the bag or charcoal tube), any pump of proper capacity can be used. If the pump is to be used for a direct sampling technique (pump in the sample line), the pump internals must be leakless and made of stainless steel or, preferably, Teflon. Upon receipt, check for proper specifications. If the pump does not meet the specifications, repair or replace it.

Flowmeter - The flowmeter must be of the proper flow rate range. Upon receipt, check the specifications and then calibrate as described in Subsection 2.1.3. If the flowmeter does not meet the requirements, replace or recalibrate it.

Adsorption Tube - An absorption tube must (1) be of adequate capacity, (2) contain the proper adsorption material, and (3) consist of a primary and secondary section. The selection of the proper type and size of adsorption tube should be based on previous experience (including the literature and tables in the Method Highlights) or laboratory evaluation. The selection and/or evaluation of the proper adsorption tube is described in detail in Subsection 3.4. The criteria shown in Subsection 3.4 must be met or the tubes must be replaced or modified.

Personnel Sampling Pump - A personnel sampling pump can be used for collecting adsorbent tube samples. It must sample at or be adjustable to the proper flow rate range. Upon receipt, check the specifications and calibrate as described in Subsection 2.1.4. If it does not meet the specifications, replace or calibrate it.

1.1.4 *Direct Pump Sampling Procedure* - The direct pump sampling procedure will require the same apparatus described in Section 1.1.3 for bag and adsorption tube sampling. The only difference is that the pump internals must be constructed of materials that will not interfere in the analysis (i.e., Teflon or stainless steel) and the rigid container does not have to be leak free. The system should be assembled, leak checked and then the flow rate checked as described above. If the

system does not meet the criteria, then it must be replaced or repaired and then leak checked and recalibrated.

1.1.5 *Explosion Risk Bag Sampling Procedure* - The following apparatus, in addition to the apparatus described in Subsection 1.1.3, will be required for collection of bag samples in areas where there is any possibility of explosion. These procedures assume that the sample gas collected is not above the lower explosive limit. If it is, a complete safety plan should be developed and reviewed by the plant and tester. **This Handbook will not attempt to describe the procedures used to collect explosive gases.**

The major concern in most areas having an explosion potential is that no open flames or non-intrinsically safe electrical equipment be used. The first approach to sampling in these areas is to remove the electrial systems (i.e., pumps) to an area that is not explosive. This can be accomplished by running the vacuum line from an area that is not explosive to the sample bag or charcoal tube in the explosive area. The vacuum line can be run up to 200 to 300 feet with no problems. Sampling is then conducted in the normal manner.

Another approach described in Method 18 uses a steel canister to provide the vacuum source. This approach is difficult and can still be hazardous because it involves handling a steel container, and possibly a stainless steel probe, in an explosive area. Another alternative is the use of an intrinsically safe pump, such as a personnel sampling pump, with adsorption tubes or Tedlar bags housed in evacuable containers. Any system that is purchased or constructed must be leakless, be able to control the flow rate properly, and meet all plant safety requirements.

1.1.6 *Heated Bag Sampling Procedure* - This procedure must be used in the event that condensation is observed in the bag and/or sample line during testing or if the sample bag retains more than 10% of the sample concentration based on the post-test sample bag retention check. The apparatus described below will be required, in addition to the apparatus described in Subsection 1.1.3. Both the sample line and container must be heated to maintain the bag at a specified temperature (i.e., 0°C to 3°C above source temperature). The sampling system is checked in the manner described above, except that the heating system must also be considered; check procedures should consider use of the system at ambient temperatures less than the laboratory temperature (including wind chill factors). The entire surface of the sample probe and the sample bag must be maintained at the specified temperature. A possible alternative to maintaining the bag at the specified temperature is the addition of external heating with heat lamps prior to analysis. The exact system that will be suitable for any given source should be determined prior to testing, if possible. The operation and checks of heated sampling systems are described in Subsection 4.3. If the system does not meet all the criteria, use a different approach or repair the system and recalibrate.

Heated Bag Sample Container - The heated bag sample container must be capable of maintaining the entire bag at the specified temperature. If an electrical source is used to heat the container, the tester must be aware of the additional explosion potential that is created. One check on the system can be made with a thermocouple in the sample cavity; this check of the system will not, however, demonstrate that all the surfaces are maintained at the required temperature. All external surfaces of the container should be well insulated. A visual check of the system should reveal if the system appears to be sufficiently insulated. If the system allows the bag to have cooler surfaces, the posttest

retention check on the bag will probably fail.

Heated Sample Lines and Probe - The sample probe and sample line must also be capable of maintaining the specified temperature. They should also not have any cooler surfaces. These can be checked by pulling the desired flow rate through them and then checking the temperature in the line and/or probe with a thermocouple. Proper insulation is necessary to maintain the temperature throughout the entire length. If the temperature cannot be maintained, replace or repair the line and/or probe and then recheck.

1.1.7 *Prefilled Tedlar Bag Sampling Procedure* - This procedure is an alternative to the heated bag sampling procedure. The following apparatus and reagents are required for this procedure, in addition to the apparatus described in Subsections 1.1.3 and 1.1.4. The prefilled bag sampling system is used to dilute the concentration of the condensibles below saturation. This system can also be used to dilute the gases to below the lower explosive limit. The major difference between the prefilled bag sampling system and the other bag sampling systems is that the volume of diluent gas added to the sample bag and the volume of gas sampled must be accurately measured. The dilution must be accounted for in the calculation of the measured gas concentration. Therefore, the diluent gas must be added with a calibrated dry gas meter or a calibrated flowmeter; then, during sample collection, the gas collected must be accurately measured using a flowmeter or a metered pump. To obtain the required accuracy, the flowmeter and pump are placed in the sample line prior to the sample bag. Since condensation may occur, the flowmeter and pump must be housed in a heated box. This system is checked in the same manner as a dilution system (see Subsection 1.1.9). The check for the prefilled system is described in Subsection 4.3.4.

Heated Flowmeter - A calibrated heated flowmeter is required to accurately determine the volume of gas sampled. The flowmeter should be housed in a heated box that will maintain the specified temperature. The flowmeter should be calibrated as described above in Subsection 2.1.3. If the criteria are not met, replace or repair and then recalibrate. A metering type pump may be used to replace the flow rate meter and the pump.

Positive Displacement Teflon-Lined Pump - A positive displacement pump lined with Teflon or constructed of stainless steel, of proper capacity and contained in a heated box is required. A Teflon-coated diaphram-type pump that can withstand 120°C and delivers 1.5 liters/minute is typically used. Upon receipt, check the pump for capacity and then conduct a leak check on the pump. The pump must be leak free at all vacuum settings. The heating system will be checked during the sampling system check. If the pump is not of the correct capacity and not leak free, then replace or repair it.

Heated Box for Flowmeter and Pump - The flowmeter and pump must be contained in a heated box to maintain the proper temperature. Construct the box such that the temperature can be controlled and monitored. After construction, check the system to ensure that it will maintain the desired temperature(s). If it will not maintain the temperature(s), repair the unit.

1.1.8 *Direct Interface Sampling Procedure* - A heated probe, heated sample line, heated gas sampling valve, needle valve, and charcoal adsorber are required for direct interface sampling. The required apparatus and reagents pertaining to the

gas chromatograph are described below in Subsection 1.2. After the individual components are checked as shown below, the sampling system should be assembed as shown in Subsection 4.3.6 and checked using the following procedures:

1. Turn on the heating system and adjust to the maximum temperature at which it is to be used.
2. Connect the inlet to the sampling probe. After the heating system has stabilized at the temperature setting, turn on the pump and evacuate to about 10 in. of H_2O. The system must be leak free; no flow should be observed from the charcoal adsorber system. If the system is not leak free, repair the system.
3. After the system has been shown to be leak free, adjust the needle valve until the flow rate that will be used in the field is obtained. The temperature at the discharge of the heated sample valve should be at the set temperature. Insert a thermocouple into the inlet of the probe to insure that the first several feet of the probe and line are properly heated. If the set temperature is not obtained, repair the system or use the temperature obtained for a recalibration of the temperature setting.

Heated Probe and Sample Lines - The sample probe and sample line must be equipped with a heating system and insulation. All of the interior surfaces must be maintained at the temperature setting. Although all the interior surfaces can not be easily checked, installing proper insulation and following the system check shown above should be sufficient to determine the adequacy of the probe and sample line heating system.

Heated Gas Sampling Valve - A heated sampling valve (which includes the sample loops) is required to maintain the sample injected into the GC at the desired temperature. The sample valve and loop are generally enclosed in an oven in which the temperature can be controlled and monitored. Upon receipt, check the temperature controller.

Charcoal Adsorber - The charcoal adsorber is required to remove the organics from the excess flow through the system. Since the charcoal adsorber is used only for tester safety, there are no requirements on the adsorber. However, since the charcoal will be spent with time, the tester should change it periodically. Alternatively, the flow can be vented at a safe distance away from any personnel.

1.1.9 *Dilution Interface Sampling Procedure* - In addition to the apparatus described in Subsection 1.1.8, dilution pumps, flowmeters and valves which are contained in a heated box, and diluent gases are required for the dilution interface system. The calibration of the dilution system is described in Subsection 2.2. The individual components should be checked as shown below and then the system should be calibrated as described in Subsection 2.2. If the system does not meet the calibration requirements, it should be replaced, or repaired and recalibrated.

Dilution Pumps - Two Model A-150 Komhyr Teflon positive displacement-type pumps, or equivalent models capable of delivering 150 cc/minute, are required. Alternatively, calibrated flowmeters can be used in conjunction with Teflon-coated diaphram pumps. Upon receipt calibrate the pumps or flowmeter and pump as described in Subsection 2.1. If the pumps do not meet the calibration requirements, replace or repair and then recalibrate.

Flowmeters - Two flowmeters are required to measure the diluent gas, at a rate of about 1350 cc/minute. Upon receipt, the flowmeters should be calibrated as described in Subsection 2.1. If the flowmeters do not meet the calibration critera, replace or repair and then recalibrate.

Diluent Gas - Diluent gas in cylinders fitted with regulators are required for sample dilution. Nitrogen or hydrocarbon-free air can be used depending on the nature of the source gases. Alternatively, ambient air can be cleaned and dried with charcoal and silica gel. The organics in the dilutent gas must be below the detection limit.

Heated Box for Sample Dilution System - The pumps and control valves must be housed in a heated box to control and monitor the temperature. After construction or receipt, check the temperature control system. If the box cannot maintain the desired temperature, replace or repair and recheck.

1.2 Sample Analysis

The analysis of Method 18 samples requires the use of a gas chromatograph (GC) regardless of the technique used for either presurvey or final sampling. Guidance for the selection of suitable GC detectors is provided in Table C in the Method Highlights Section. As a starting point for the analysis of the presurvey sample, Table D in the Method Highlights Section provides guidance for the selection of a suitable packed GC column. Any interferences with the GC analysis may be source-specific, so the most suitable analytical system must be established using the presurvey samples. The following apparatus will be required for the GC analysis.

1.2.1 *Gas Chromatograph* - A GC equipped with a suitable detector as specified in Table C in the Method Highlights Section. The GC shall be equipped with a temperature-controlled sample loop and valve assembly for analysis of gas samples or a temperature-controlled injection port for analysis of liquid samples from adsorption tubes. Use of alternative techniques for introducing samples into the GC requires the approval of the Administrator. The GC should be equipped with a temperature-controlled oven, while a temperature-programmable oven may also be required for some analyzers. Method 18 may be used to quantify gaseous organic compounds at concentrations ranging from about 1 part-per-million (ppm) to the upper range governed by detector saturation or column overloading. For the combination of GC options chosen, the lower limit of quantitation, as defined by Knoll[42], for the target organic compounds should be less than the emission limit for the particular source being tested.

1.2.2 *GC Column* - Guidance for the selection of the appropriate GC column is provided in Table D in the Method Highlights Section. The columns listed in Appendix I to Table D have been found to work for analysis of the corresponding organic compounds under certain conditions. Since interfering compounds may be source-specific, Method 18 permits the use of any GC column, provided the following precision and accuracy are achieved:

Precision: Duplicate analyses within 5 percent of their mean value.
Accuracy: Analysis results of an audit sample within 10 percent of the prepared value.

In addition, resolution of interfering compounds from target compounds should be achieved. For determining whether acceptable resolution has been achieved, follow the procedures described in Appendix C "Quality Assurance Procedures", Procedure 1 "Determination of Adequate Chromatographic Peak Resolution."[43]

1.2.3 *Recorder* - A linear strip chart recorder is required, as a minimum, to record the GC detector output. Alternatively, an electronic integrator may be used and is generally recommended.

1.2.4 *Recorder or Electronic Integrator Paper* - Consult operator's manual or manufacturer for correct type.

1.2.5 *Regulators* - Gas cylinder regulators will be required for use of the gas cylinders described in Subsections 1.3.1, 1.3.2, and 1.3.3. Consult with suppliers of gas cylinders to determine the proper type of regulator required.

1.2.6 *Tubing and Fittings* - Tubing and fittings will be required to connect the gas cylinder regulators to the GC.

1.3 Reagents and Glassware

The exact reagents and glassware required depend on the sampling procedure chosen, the calibration techniques to be used, and the particular requirements of the GC system.

1.3.1 *GC Carrier Gas* - The carrier gas selected must be hydrocarbon-free. The type of carrier gas depends on the type of GC detector and GC column being used. Consult the GC operator's manual, the GC manufacturer, and/or the column manufacturer for recommendations on the optimum carrier gas for a particular application.

1.3.2 *Auxillary GC Gases* - Certain GC detectors will require auxillary gases for proper operation. Consult the GC operator's manual or the GC manufacturer for recommendations on a particular application.

1.3.3 *Calibration Gases* - These include cylinder gases containing known concentrations of target organic compounds for preparation of GC calibration standards, direct use as GC calibration standards, or calibration of a dilution interface system. If gases are not available in the required concentrations for GC calibration, procure the reagents and glassware described in Subsections 1.3.4 through 1.3.7.

1.3.4 *Zero Gas* - Hydrocarbon-free air or nitrogen, for preparing gaseous calibration standards from calibration gas cylinders or liquid organic compounds.

1.3.5 *Liquid Organic Compounds* - Pure or high purity liquid (occasionally gaseous) samples of all the organics for which calibration standards will be prepared.

1.3.6 *Syringes* - Calibrated, gas tight 500-, 10-, and 1.0-microliter sizes with maximum accuracy, for preparing gaseous calibration standards, for preparing adsorption tube standards, and for injection of liquid standards and samples into the GC. Other size gas tight syringes may be appropriate.

1.3.7 *Midget Impinger/Hot Plate Assembly* - To prepare gaseous standards in Tedlar bags from liquid organic compounds requires a midget impinger equipped with a septum and a tee on the inlet stem and a boiling water bath on a hot plate. A dry gas meter, previously described in Subsection 1.1.1, is also required.

1.3.8 *Screw Top Septum Vials* - For preparation of adsorption tube standards and samples, 7-ml amber screw top septum vials with Teflon-lined septa are required.

1.3.9 *Desorption Liquid* - For preparation of adsorption tube standards and samples, desorption liquid is required. For the correct desorption liquid, refer to the appropriate NIOSH method for the target compound(s) referenced in Table B in the Method Highlights Section.

Table 1.1. ACTIVITY MATRIX FOR PROCUREMENT OF APPARATUS AND SUPPLIES

Apparatus	Acceptance limits	Frequency and method of measurement	Action if requirements are not met
All Sampling Procedures			
Sampling system check	Maintain proper flow rate and temperature	Upon receipt, conduct check in specified subsection	Repair or return to manufacturer
Sampling probe	Proper material of construction and capable of maintaining proper temperature	Visually check and then run heating system checkout	Repair or return to manufacturer
Sample line and connecting tubing	Constructed of Teflon and capable of maintaining proper temperature	Visually check and then run heating system checkout	Repair or return to manufacturer
Quick connects	Stainless steel construction and leak free	Visually check and conduct leak check	Repair or return to manufacturer
Barometer	Capable of measuring atmospheric pressure to within 2.5 mm (0.1 in.) Hg	Check against mercury in-glass barometer or equivalent (Sec. 3.5.2)	Determine correction factor, or reject
Moisture determination	See Section 3.3 of this Handbook	Same as in Section 3.3	Same as Sec. 3.3
Flow rate determination	See Section 3.1 of this Handbook	Same as in Section 3.1	Same as Sec. 3.1
Glass Sampling Flask Technique			
Purged or evacuated sampling flasks	Double ended glass flask with Teflon stopcocks	Visually check upon receipt	Return to manufacturer

(Continued)

Table 1.1 (Continued)

Apparatus	Acceptance limits	Frequency and method of measurement	Action if requirements are not met
Evacuated Container and Adsorption Tube Sampling			
Tedlar bag	Constructed of material in which organics remain stable and are not retained; leak free	Upon receipt, leak check and conduct stability and retention check	Return to manfacturer, change material, or use different sampling technique
Rigid leak-proof container	Leak free and of proper size	Upon receipt, visually check and then conduct leak check	Repair or return manufacturer
Pump	Leak free and of proper capacity	Visually check and then conduct leak check and flow rate check	Repair or return to manufacturer
Flowmeter	Proper flow rate range and calibrated	Upon receipt, check specifications, check visually, then calibrate	Return to manufacturer or repair and then recalibrate
Adsorption tube	Proper material, adequate capacity, and consisting of a primary and secondary section	Conduct laboratory evaluation or consult literature	Replace or make modification and recheck
Personnel sampling pump	Proper flow rate range and calibrated	Upon receipt, check specifications, then calibrate	Return to manufacturer or repair and then recalibrate

(Continued)

Table 1.1 (Continued)

Apparatus	Acceptance limits	Frequency and method of measurement	Action if requirements are not met
Direct Pump Sampling			
Pump	Stainless steel or Teflon-lined, proper capacity, leak free, and heated	Visually check, then conduct leak check, flow rate check, and system heating check	Return to manufacturer or repair and recalibrate
Flowmeter	Proper flow rate range, leak free, and heated	Visually check, then conduct leak check, flow rate check, and heating check	Return to manufacturer or repair and recalibrate
Explosion Risk Bag Sampling			
Nonexplosive vacuum source	Proper flow rate capacity and intrinsically safe	Check with plant safety rules and check flow rate capacity	Return to manufacturer or repair and recheck
Heated Bag Sampling			
Sampling bag	Same as above	Same as above	Same as above
Heated bag container	Leak free, adequate capacity, and heat system capable of maintaining proper temperature	Visually check, then conduct leak check and heating check	Return to manufacturer or repair and recheck
Heated sample lines and probe	Constructed of Teflon and/or stainless steel	Visually check, then conduct heating check	Return to manufacturer or repair and recheck
Prefilled Bag Sampling			
Heated flowmeter (Continued)	Same as above	Same as above	Same as above

Table 1.1 (Continued)

Apparatus	Acceptance limits	Frequency and method of measurement	Action if requirements are not met
Stainless steel or Teflon-lined pump	Same as above	Same as above	Same as above
Heated box for flowmeter and pump	Proper flow rate range and capacity; heating system capable of maintaining the proper temperature	Visually check, then conduct leak check, flow rate check, and heating check	Return to manufacturer or repair and recheck
<u>Direct Interface Sampling</u>			
Heated probe, pump and sample lines	Same as above	Same as above	Same as above
Heated GC sample valve	Proper valve and heating system; consult owner's manual	Visually check, then conduct check of heating	Return to manufacturer or repair and recheck
<u>Dilution Interface Sampling</u>			
Stainless steel or Teflon-lined pump	Same as above	Same as above	Same as above
Dilution pump	Teflon-lined metering pump with capacity of 150 cc/min	Visually check, then calibrate	Return to manufacturer or repair and recalibrate
Flowmeters	Proper flow rate range and calibrated	Visually check, then calibrate	Return to manufacturer or repair and recalibrate
Diluent gas	Hyrocarbon-free air, nitrogen, or dry cleaned air	Visually check cylinder; check cylinder pressure; run a blank to monitor impurities	Return to manufacturer

(Continued)

Table 1.1 (Continued)

Apparatus	Acceptance limits	Frequency and method of measurement	Action if requirements are not met
Heated box for sample dilution system	Heating system with temperature controller and monitor	Conduct heating check	Return to manufacturer or repair and recheck
Sample Analysis			
Gas chromatograph	Suitable detector, precision of ± 5%, and accuracy of ± 10%	Refer to Table C in Method Highlights then check GC with applicable organics	Return to manufacturer or repair and recheck
GC column	Adequate peak resolution	Upon receipt, use procedure described in 40 CFR 60, App. C or Method 625	Return to manufacturer or change conditions and recheck
Strip chart recorder or electronic integrator	See owner's manual	Upon receipt, check as recommended by manufacturer	Repair or return to manufacturer
Regulators	Proper CGA fittings and pressure control	Upon receipt, attach to cylinder and leak check	Return to manufacturer or repair or replace fitting and recheck
Reagents and Glassware			
GC carrier gas	As specified by GC owners manual and hydrocarbon-free	Visually check upon receipt; check cylinder pressure	Return to manufacturer
Auxillary gas	As specified by owners manual	Visually check upon receipt; check cylinder pressure	Return to manufacturer
Calibration gas	Proper compounds and known concentration in proper range	Upon receipt, check cylinder tag and certification; check cylinder pressure	Return to manufacturer or remake or rename

(Continued)

Table 1.1 (Continued)

Apparatus	Acceptance limits	Frequency and method of measurement	Action if requirements are not met
Zero gas	Hydrocarbon-free air or nitrogen	Visually check upon receipt; check cylinder pressure	Return to manufacturer

2.0 CALIBRATION OF APPARATUS

Calibration of the apparatus is one of the most important functions in maintaining data quality. The detailed calibration procedures included in this section were designed for the sampling equipment specified in Method 18 and described in the previous section. The calibration of the analytical equipment is described in the section detailing the analytical procedures, Section 3.16.5. Table 2.1 at the end of this section summarizes the quality assurance functions for the calibrations addressed in this section. All calibrations including the analytical equipment should be recorded on standardized forms and retained in a calibration log book.

2.1 Metering Systems

2.1.1 *Wet Test Meter* - The wet test meter must be calibrated and have the proper capacity. For Method 18, the wet test meter should have a capacity of about 1 L/min. No upper limit is placed on the capacity; however, the wet test meter dial should make at least one complete revolution at the specified flow rate for each of the three independent calibrations.

Wet test meters are calibrated by the manufacturers to an accuracy of ± 2%. Calibration of the wet test meter must be checked upon receipt and yearly thereafter. A liquid positive displacement technique can be used to verify and adjust, if necessary, the accuracy of the wet test meter to ± 2%. This technique is described in Sections 3.5.2, 3.8.2, and 3.15.2 of the Handbook.

2.1.2 *Dry Gas Meter* - A dry gas meter is required for gas and liquid injection calibrations, to prefill bags prior to sampling using the prefilled bag dilution technique, and/or to calibrate the flow rate meters. For Method 18, the dry gas meter is the same size or smaller than the dry gas meter typically used for Method 6. The meter must have an accuracy of ± 3% for the flow rate and sample volume used. Calibration of the dry gas meter must be conducted initially upon receipt, quarterly when utilized to make laboratory calibration standards, and following each field test series for field use. The calibration procedures are described in Section 3.5.2 of this Handbook.

2.1.3 *Flow Rate Meter(s)* - Flow rate meters are needed for (1) sampling and (2) making calibration standards. Since they are used to determine flow rate and for total volume determinations, the flow rate meter(s) selected must have an accuracy of ± 3% for the flow rate and total sample volume for which they are used. Acceptable flow rate meters include rotameters, critical orifices, mass flowmeters, and dry gas meters. If data from the flow rate meter is used only as an indicator of the flow rate and is not used in any of the emission calculations, then the accuracy of ± 3% does not apply. While it is desirable to calibrate the gas flowmeter with the cylinder gas to be measured, the quantity available and cost may preclude it. The error introduced by using the diluent gas for calibration in place of the actual gas to be measured is insignificant for gas mixtures of up to 1,000 to 2,000 ppm.

Initial Calibration - The flow metering system should be calibrated when first purchased and at any time the posttest calibration yields a calibration factor that does not agree within 5% of the pretest calibration factor. A

calibrated wet test meter, calibrated dry gas meter, or a properly sized bubble meter should be used to calibrate the metering system.

The flow rate meter should be calibrated in the following manner before its initial use in the field.

1. Leak check the flow rate meter and pump as follows:
   a. Temporarily attach a suitable rotameter (e.g., 0-40 cm^3/min) to the outlet of flow rate system. The pump should be placed either before or after the flow rate meter based on where it will be used. Place a vacuum gauge at the inlet to the drying tube.
   b. Plug the flow rate system inlet. Evacuate to a pressure at least equal to the lowest pressure that will be encountered during use. If the system usually operates at or near atmospheric conditions, then pull a vacuum of 25 mm (1 in.) Hg.
   c. Note the flow rate as indicated by the rotameter.
   d. A leak of $\leq$0.02 L/min must be recorded or leaks > 0.02 L/min must be eliminated.
2. Attach the wet test meter, bubble meter, or calibrated dry gas meter to the inlet of the flow rate metering system.
3. Run the pump for 15 minutes with the flow rate set at the midrange flow to allow the pump to warm up and to permit the interior surface of the wet test meter to become wet.
4. Collect the information required in the forms provided {Figure 2.1A (English units) or 2.1B (metric units) when calibrating a dry gas meter , rotameter, or mass flow meter, and Figure 2.2A (English units) or 2.2B (metric units) when calibrating a critical orifice} using sample volumes equivalent to at least five revolutions of the dry test meter. Three independent runs must be made.
   a. For critical orifices, runs will be conducted at the single flow rate of the orifice meter. The runs should be at three different vacuums that are greater than one half an atmosphere (i.e., 18, 19 and 20 in. Hg.). This is to demonstrate that the orifice yields the same flowrate at all critical vacuums.
   b. For rotameters, mass flow meters, and dry gas meters, runs will be conducted at three different flow rates over the range to be used (top, middle, and bottom of range).
5. Calculate the Y_i for each run for the dry gas meter, rotameter and mass flowmeter or calculate the K' for the critical orifice as shown on the data forms. Adjust and recalibrate or reject the dry gas meter, rotameter, or mass flow meter if one or more values of Y_i fall outside the interval $Y \pm 0.03Y$, where Y is the average for three runs. Otherwise, the Y (calibration factor) is acceptable and is to be used for future checks and subsequent test runs. The K' should be within 3% of the average for all three runs. If this is not true, reject the orifice or repeat the calibration until acceptable results are obtained. The completed form should be forwarded to the supervisor for approval, and then filed in the calibration log book.

Posttest Calibration Check - After each field test series, conduct a calibration check as described above in Subsection 2.1 concerning the initial calibration with the following exceptions:

Date 1/11/88 Calibrated by ATM Meter system no. RO-16 Primary meter no. SWTM-1
Barometric pressure, P_m = 29.96 in. Hg Ambient temperature 69 °F
Type of primary meter: wet test X, dry gas _____, or bubble meter _____
Type of flowmeter calibrated: rotameter X, dry gas meter _____, or mass flowmeter _____

Primary meter readings					Flowmeter readings							
Initial reading (V_{pi}),[a] ft^3	Final reading (V_{pf}),[a] ft^3	Initial temp, °F (t_{pi}) °F	Final temp, °F (t_{pf}) °F	Press drop (D_p)[c] in. H_2O	Initial reading (V_{si}),[b] ft^3 or ft^3/min	Final reading (V_{sf})[b] ft^3 or ft^3/min	Initial temp (t_{si}) °F	Final temp (t_{sf}) °F	Press drop (D_s),[c] in. H_2O	Time min (θ),[d] min	Calibration factors (Y_i),[e]	Calibration factors (Y)
0	0.7066	69	69	-2	0.0177	0.0177	69	69	0	40	0.993	—
0	0.7068	70	70	-2	0.0353	0.0353	70	70	0	20	0.996	—
0	1.0604	70	76	-2	0.0530	0.0530	70	70	0	20	0.995	0.995

[a] Volume passing through the meter using the initial and final readings; requires a minimum of at least five revolutions of the meter.
[b] Volume passing through the meter using the initial and final readings or the indicated flow rate using the initial and final flow rate setting.
[c] Pressure drop through the meter used to calculate the meter pressure.
[d] The time it takes to complete the calibration run.
[e] With Y defined as the average ratio of volumes for the primary meter compared to the flowmeter calibrated, $Y_i = Y \pm 0.03Y$ for the calibration and $Y_i = Y \pm 0.05Y$ for the posttest checks; thus:

For calibration of the dry gas meter:

$$Y_i = \frac{(V_{pf} - V_{pi})[(t_{si} + t_{sf})/2 + 460°F][P_m + (D_p/13.6)]}{(V_{sf} - V_{si})\ [(t_{pi} + t_{pf})/2 + 460°F][P_m + (D_s/13.6)]} \text{(Eq.2-1)}, Y = \frac{Y_1 + Y_2 + Y_3}{3} = \text{———(Eq.2-2)}$$

For calibration of the rotameter and mass flowmeter:

$$Y_i = \frac{(V_{pf} - V_{pi})[(t_{si} + t_{sf})/2 + 460°F][P_m + (D_p/13.6)]}{[(V_{sf} + V_{si})/2]\theta[(t_{pi} + t_{pf})/2 + 460°F][P_m + (D_s/13.6)]} \text{(Eq. 2-3)}, Y = \frac{Y_1 + Y_2 + Y_3}{3} = \text{———(Eq.2-4)}$$

Figure 2.1A. Flowmeter calibration data form (English units).

Date 1/11/88 Calibrated by ATM Meter system no. RO-16 Primary meter no. SWTM-1
Barometric pressure, P_m = 761 mm Hg Ambient temperature 20.5 °C
Type of primary meter: wet test X, dry gas _____, or bubble meter _____
Type of flowmeter calibrated: rotameter X, dry gas meter _____, or mass flowmeter _____

Primary meter readings					Flowmeter readings							
Initial reading (V_{pi}),[a] m^3	Final reading (V_{pf}),[a] ~~m^3~~ ℓ	Initial temp, °F (t_{pi}) °C	Final temp, °F (t_{pf}) °C	Pres drop (D_p)[c] mm H_2O	Initial reading (V_{si}),[b] m^3 or m^3/min	Final reading (V_{sf})[b] m^3 or m^3/min	Initial temp (t_{si}) °C	Final temp (t_{sf}) °C	Press drop (D_s),[c] mm H_2O	Time min (θ)[d] min	Calibration factors (Y_i),[e]	Calibration factors (Y)
0	20.13	20.5	20.5	-130	0.5	0.5	20.5	20.5	0	40.0	0.994	—
0	20.16	20.6	20.5	-130	1.0	1.0	20.6	20.6	0	20.0	0.996	—
0	30.26	20.6	20.6	-130	1.5	1.5	20.6	20.6	0	20.0	0.997	0.996

[a] Volume passing through the meter using the initial and final readings and requires a minimum of at least five revolutions of the meter.
[b] Volume passing through the meter using the initial and final readings or the indicated flow rate using the initial and final flow rate setting.
[c] Pressure drop through the meter used to calculate the meter pressure.
[d] The time it takes to complete the calibration run.
[e] With Y defined as the average ratio of volumes for the primary meter compared to the flowmeter calibrated, $Y_i = Y \pm 0.03Y$ for the calibration and $Y_i = Y \pm 0.05Y$ for the posttest checks; thus,

For calibration of the dry gas meter:

$$Y_i = \frac{(V_{pf} - V_{pi})[(t_{si} + t_{sf})/2 + 273°K][P_m + (D_p/13.6)]}{(V_{sf} - V_{si})\ [(t_{pi} + t_{pf})/2 + 273°K][P_m + (D_s/13.6)]} \text{ (Eq. 2-5)}, \quad Y = \frac{Y_1 + Y_2 + Y_3}{3} = \text{——} \text{ (Eq. 2-6)}$$

For calibration of the rotameter and mass flowmeter:

$$Y_i = \frac{(V_{pf} - V_{pi})[(t_{si} + t_{sf})/2 + 273°K][P_m + (D_p/13.6)]}{[(V_{sf} + V_{si})/2]\theta[(t_{pi} + t_{pf})/2 + 273°K][P_m + (D_s/13.6)]} \text{ (Eq. 2-7)}, \quad Y = \frac{Y_1 + Y_2 + Y_3}{3} = \text{——} \text{ (Eq. 2-8)}$$

Figure 2.1B. Flowmeter calibration data form (metric units).

Date 1/11/88 Calibrated by ATM Meter system no. CO-12 Primary meter no. SWTM-1
Barometric pressure, P_m = 29.96 in. Hg Ambient temperature 67 °F
Type of primary meter: wet test X, dry gas _____, or bubble meter _____
Type of critical orifice: capillary glass X, needle or tubing _____, or adjustable _____

Primary meter readings					Critical orifice readings						
Initial reading (V_{pi}),[a] ft^3	Final reading (V_{pf}),[a] ft^3	Initial temp, °F (t_{pi}) °F	Final temp, °F (t_{pf}) °F	Pres drop (D_p) in. H_2O	Initial setting[b] ft^3 or ft^3/min	Final setting[b] ft^3 or ft^3/min	Press drop[c] in. Hg	Time min (0),[d] min	Calculated flow rate [$Q_{(std)}$][e] ft^3/min	Calibration factor[e] (K'_i)	Calibration factor[e] (K')
0	0.773	69	69	-2	fixed	N/A	19	20	0.0386	0.0296	—
0	0.773	70	70	-2	fixed	N/A	20	20	0.0386	0.0296	—
0	0.773	70	70	-2	fixed	N/A	21	20	0.0386	0.0296	0.0296

[a] Volume passing through the meter using the initial and final readings and requires a minimum of at least five revolutions of the meter.
[b] Volume passing through the orifice using the initial and final readings or the indicated flow rate using the initial and final flow rate setting (for variable setting orifice only).
[c] Pressure drop through the meter used to calculate the meter pressure.
[d] The time it takes to complete the calibration run.
[e] With K' defined as the average orifice calibration factor based on the volumes of the primary test meter, $K'_i = K' \pm 0.03K'$ for the calibration and $K'_i = K' \pm 0.05K'$ for the posttest checks: thus,

Flow rate of the primary meter at standard conditions:

$$Vp_{(std)} = \frac{17.71(V_{pf} - V_{pi})(P_m + D_p/13.6)}{[(t_{pi} + t_{pf})/2 + 460°F]} \text{ (Eq. 2-9)}, \quad Q_{(std)} = \frac{Vp_{(std)}}{0} = _____ \text{ (Eq. 2-10)}$$

For determination of the K' for the critical orifice:

$$K'_i = \frac{Vp_{(std)}\,[(t_{pi} + t_{pf})/2 + 460°F]^{1/2}}{P_{bar}\;\;0} \text{ (Eq. 2-11)}, \;\&\; K' = \frac{K'_1 + K'_2 + K'_3}{3} = _____ \text{ (Eq. 2-12)}$$

Figure 2.2A. Critical orifice calibration data form (English units).

Date 1/11/88 Calibrated by ATM Meter system no. CO-12 Primary meter no. SWTM-1
Barometric pressure, P_m = 761 mm Hg Ambient temperature 20.5 °C
Type of primary meter: wet test X, dry gas _____, or bubble meter _____
Type of critical orifice: capillary glass X, needle or tubing _____, or adjustable _____

Primary meter readings					Critical orifice readings						
Initial reading (V_{pi}),[a] L	Final reading (V_{pf}),[a] L	Initial temp, °F (t_{pi}) °C	Final temp, °F (t_{pf}) °C	Pres drop (D_p) mm H_2O	Initial setting[b] L or L/min	Final setting[b] L or L/min	Press drop[c] mm Hg	Time min (θ),[d] min	Calculated flow rate [$Q_{(std)}$][e] L/min	Calibration factor[e] (K'_i)	(K')
0	22.12	20.5	20.5	-130	fixed	N/A	480	20	1.092	0.0246	—
0	22.13	20.6	20.6	-130	fixed	N/A	510	20	1.093	0.0246	—
0	22.12	20.6	20.6	-130	fixed	N/A	530	20	1.092	0.0246	

[a] Volume passing through the meter using the initial and final readings and requires a minimum of at least five revolutions of the meter.
[b] Volume passing through the orifice using the initial and final readings or the indicated flow rate using the initial and final flow rate setting (for variable setting orifice only).
[c] Pressure drop through the meter used to calculate the meter pressure.
[d] The time it takes to complete the calibration run.
[e] With K' defined as the average orifice calibration factor based on the volumes of the primary test meter, $K'_i = K' \pm 0.03K'$ for the calibration and $K'_i = K' \pm 0.05K'$ for the posttest checks; thus,

Flow rate of the primary meter at standard conditions:

$$Vp_{(std)} = \frac{0.3858(V_{pf} - V_{pi})(P_m + D_p/13.6)}{[(t_{pi} + t_{pf})/2 + 273°C]} \text{ (Eq. 2-13)}, \quad Q_{(std)} = \frac{Vp_{(std)}}{\theta} = _____ \text{ (Eq. 2-14)}$$

For determination of the K' for the critical orifice:

$$K'_i = \frac{Vp_{(std)}\,[(t_{pi} + t_{pf})/2 + 273°C]^{1/2}}{P_{bar}\ \theta} \text{ (Eq. 2-15)}, \ \& \ K' = \frac{K'_1 + K'_2 + K'_3}{3} = _____ \text{ (Eq. 2-16)}$$

Figure 2.2B. Critical orifice calibration data form (metric units).

1. The leak check is not conducted because a leak may have been corrected that was present during testing.
2. Three or more revolutions of the dry gas meter may be used.
3. Only two runs need be conducted at the average flow rate during the test.
4. Record the calibration check data on the appropriate posttest calibration check data form, Figure 2.2A (English units) or Figure 2.2B (metric units).
5. If the posttest Y or K' factor agrees within 5% of the pretest factor, the flow meter is acceptable. If the factor does not agree due to a leak, correct the leak and recalibrate the flow rate device. The reported results should then be calculated using both the factor obtained with the leak and the factor obtained without the leak. If the flowmeter does not pass the calibration check, the metering system must be recalibrated as described above for the initial calibration. Either calculate the emission results for the test report using both factors or consult with the Administrator.

2.1.4 *Personnel Sampling Pump* - Personnel sampling pumps are used to collect samples using adsorption tubes. They should be calibrated before and after the field trip using a soap bubble meter as follows:

1. Set up the calibration apparatus as shown in Figure 2.3.
2. Check the pump battery with a voltmeter to assure adequate voltage; charge, if necessary.
3. Turn the pump on and moisten the inner surface of the soap bubble meter with soap solution; draw bubbles upward until they travel the entire length of the bubble meter without breaking.
4. Adjust the pump to desired nominal flow rate. Check the manometer; the pressure drop should not exceed 25mm Hg (13 in.) water.
5. Start a soap bubble and measure the time with a stopwatch that it takes to traverse at least 500 ml. Repeat at least twice more. Average the results and calculate the flow rate by dividing the calibration volume by the average time.
6. Record the following data:
   a. volume measured
   b. elapsed time
   c. pressure drop
   d. air temperature
   e. atmospheric pressure
   f. serial number and model of the pump
   g. date and name of operator
7. If the pump used for sample collection uses a rotameter, the calibrated flow rate must be adjusted for the ambient pressure and temperature during sampling:

$$V_{corr} = Q\ \theta (P_c\ T_s\ /\ P_s\ T_c)^{0.5}$$

Equation 2-17

where

V = Corrected sample volume, liters,
Q = Indicated flow rate, liters/min,
θ = Sampling time, min,
P_c = Pressure during calibration, mm Hg,
P_s = Pressure during sampling, mm Hg,

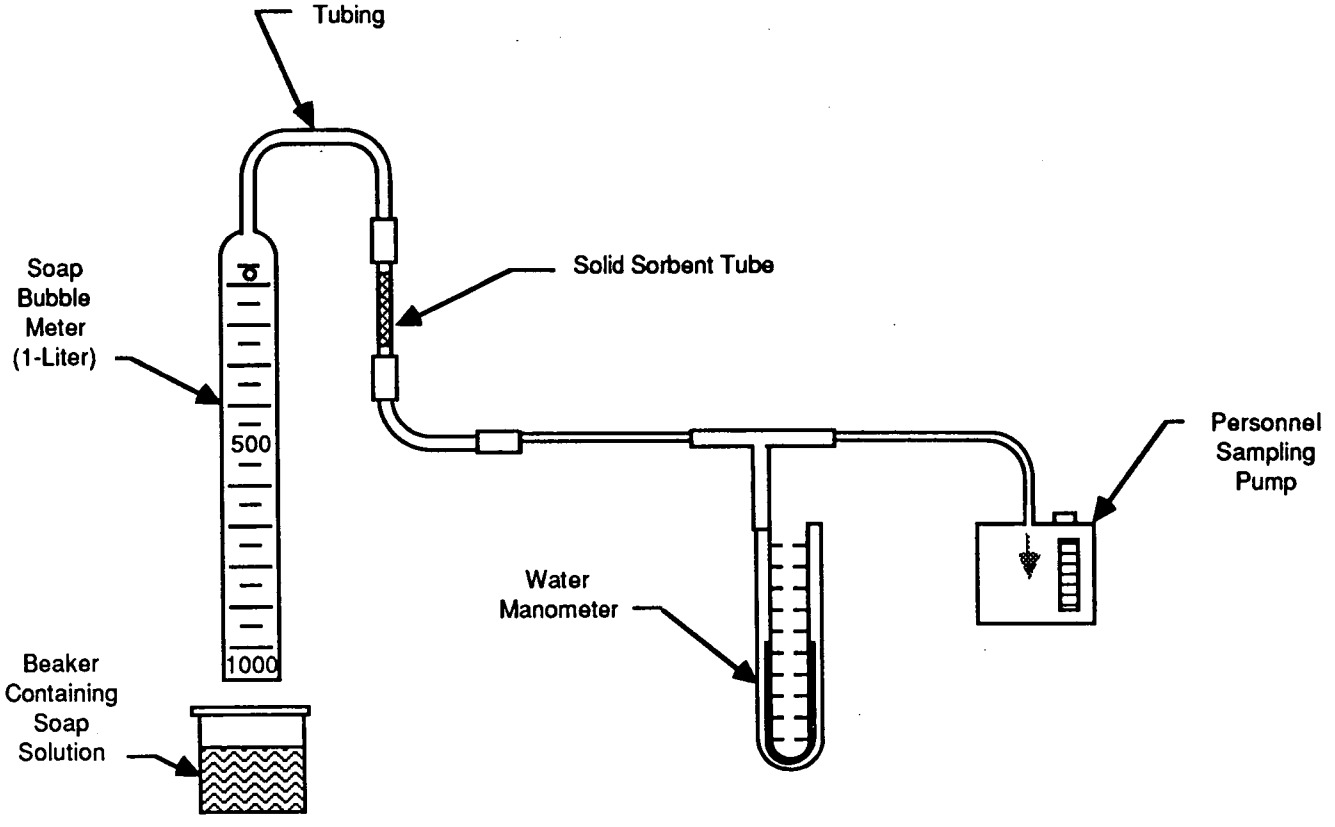

Figure 2.3. Personnel pump calibration apparatus.

T_c = Temperature during calibration, °K, and
T_s = Temperature of sample gas, °K.

2.2 Dilution System

2.2.1 *Dynamic Dilution System* - A dynamic dilution system may be required for (1) preparation of low concentration standards from high concentration standards or (2) for measuring high concentrations of organic emissions. The dynamic dilution system must be initially calibrated in the laboratory and then checked during each use. To prepare the diluted calibration samples, calibrated rotameters are normally used to meter both the high concentration calibration gas and the diluent gas. Other types of flowmeters and commercially available dilution systems can also be used provided they meet the performance criteria described below.

The following steps should be used to conduct the laboratory calibration of the dynamic dilution system:

1. Assemble the dilution system (see Figure 2.4) as a unit using a calibrated rotameter or mass flow meter for the calibration or stack gas in combination with a calibrated rotameter, mass flowmeter or dry gas meter for the diluent gas. It is recommended for dilutions up to 20 to 1 that a single dilution system be used. For dilutions greater than 20 to 1, a double dilution system should be used. It is also recommended that the system be assembled as a unit and not be disassembled between uses. The rotameters should be calibrated for the range in which they will be used following the calibration procedures described above.
2. Leak check the system by plugging the inlet line to both rotameters, placing the dilution system discharge line in a container of water, and turning on the sample pump. The system is leakless if no bubbles are released from the discharge line.
3. The dilution system can be calibrated over the range that it will be used, however, if the exact dilution to be used is known, it is better to conduct a triple calibration at the desired dilution setting. Attach the dilution system to the diluent and calibration gases. Set the flowmeters to the desired rate and fill the bag with sufficient gas for GC analysis. Be careful not to overfill the bag and cause the bag to apply additional pressure on the dilution system. Record the flow rates of both flowmeters, and the laboratory temperature and atmospheric pressure on the dynamic dilution calibration form, Figure 2.5 or an equivalent form.
4. Analyze the diluted calibration gas and a calibration gas that is in the same range as the diluted gas. The two gases must agree within 10% for the calibration point to be acceptable. Repeat the calibration runs until acceptable results are obtained at all desired settings.

2.2.2 *Static Dilution System* - The static dilution system can be used for (1) the bag sampling technique and (2) for preparation of low concentration calibration gases from high concentration cylinder gases. The dilution method for the bag sampling technique is used to reduce the concentration of organics or water vapor in a gas sample below the condensation point or for safe handling, below the lower explosive limit. Static dilution involves filling a bag with a diluent gas using a calibrated dry gas meter or mass flowmeter and using a syringe or a rotameter to add the calibration gas or a sample of stack gases to make a lower concentration calibration or sample gas.

The following steps should be used to calibrate a static dilution system in the laboratory before use:

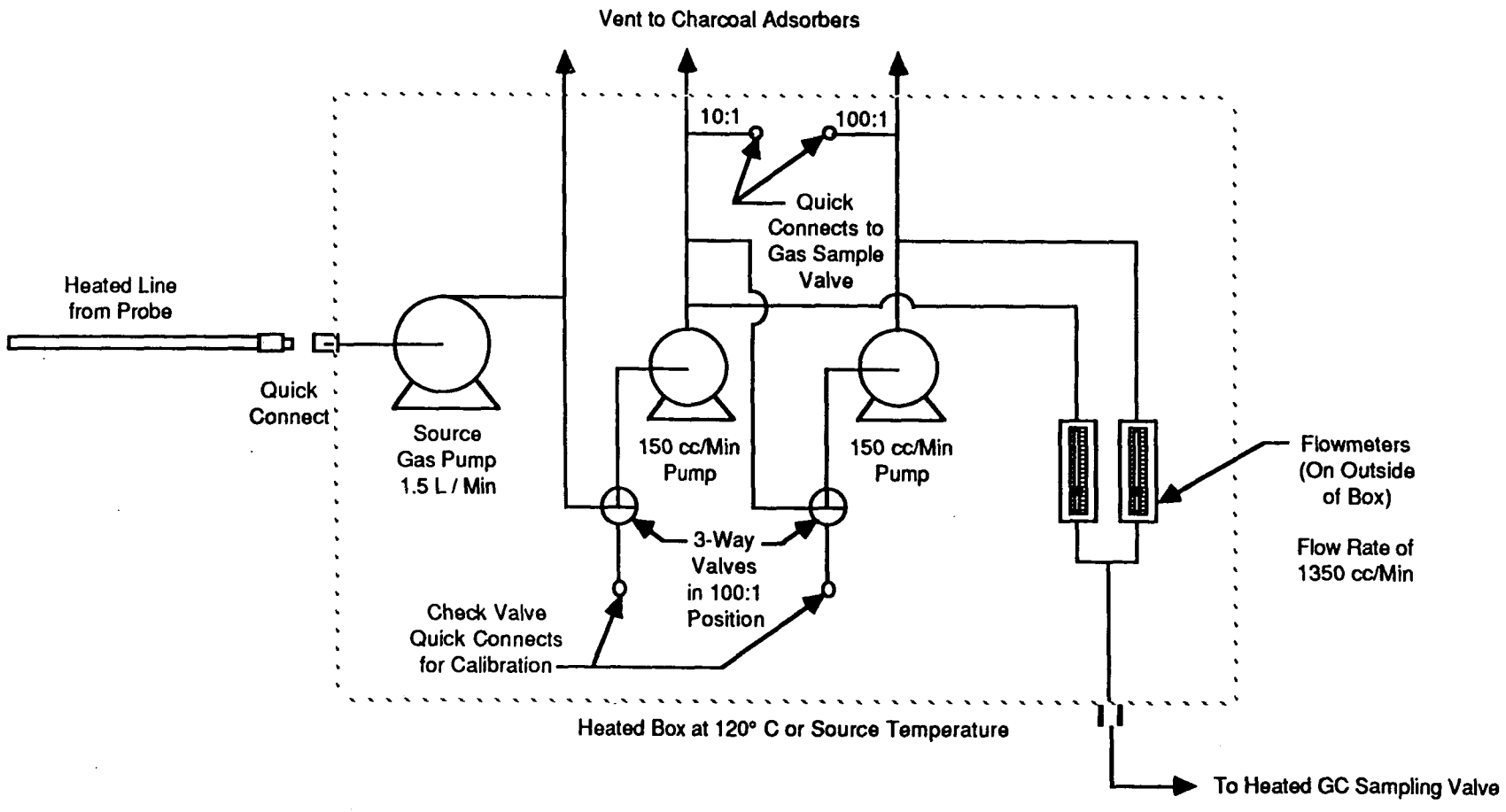

Figure 2.4. Schematic of heated box required for dilution of samples.

Date 2/19/88
Source flowmeter number D-1
Stage 1 flowmeter number E-6
Stage 2 flowmeter number N/A
Barometric press 761 mm (in.) Hg
Organic compound Perchloroethylene
Certified concentration 2210 ppmv($\bar{X}$)

Calibrated by J.D. Goodrich
Date source meter calibrated 1/28/88
Date stage 1 meter calibrated 1/28/88
Date stage 2 meter calibrated N/A
Heated box temperature 120 °C (°F)
Leak check for total system OK
Date of calibration curve 2/19/88

STAGE 1	RUN 1	RUN 2	RUN 3
Emission gas flowmeter reading, ml/min (q_{c1})	150	150	150
Diluent gas flowmeter reading, ml/min (q_{d1})	1000	1000	1000
Dilution ratio	7.667	7.667	7.667
Injection time, 24h	1031	1112	1148
Distance to peak, cm	N/A	N/A	N/A
Chart speed, cm/min	N/A	N/A	N/A
Retention time, min	3.53	3.54	3.56
Attenuation factor	4	4	4
Peak area or units	3050	2900	3000
Peak area X attenuation factor	12,200	11,600	12,000
Measured concentration,[a] ppmv	291.8	277.5	287.1
Calculated concentration,[b] ppmv (C_s)	288	288	288
Percent difference,[c] %	-1.3	+3.8	+0.3

STAGE 2 (if applicable)	RUN 1	RUN2	RUN3
Emission gas flowmeter reading, ml/min (q_{c2})	N/A	N/A	N/A
Diluent gas flowmeter reading, ml/min (q_{d2})			
Dilution ratio			
Injection time, 24h			
Distance to peak, cm			
Chart speed, cm/min			
Retention time, min			
Attenuation factor			
Peak area or units			
Peak area X attenuation factor			
Measured concentration,[a] ppmv			
Calculated concentration,[d] ppmv			
Percent difference,[c] %			

[a] See Figure 5.1 for calculation.

[b] $$C_s = \frac{10^6 \times (\bar{X} \times q_c)}{q_c + q_d}$$ = Calculated concentration for single stage

[c] $$\text{Percent Difference} = \frac{\text{Calculated Concentration} - \text{Measured Concentration}}{\text{Measured Concentration}} \times 100\%$$

[d] $$C_s = 10^6 \times \bar{X} \left[\frac{q_{c1}}{(q_{c1} + q_{d1})}\right] \times \left[\frac{q_{c2}}{(q_{c2} + q_{d2})}\right]$$ = Calculated conc. for two stage

Figure 2.5. Dynamic dilution data form.

1. Assemble the static dilution system (see Figure 4.3) and leak check the system by plugging inlet to the dilution system, placing the discharge line in a container of water, and pulling a vacuum of about 1 in. of Hg. The system is leakless if no bubbles are released from the discharge line. If the system is not leakless, find the leak and correct it.
2. Calculate as the amount of diluent gas needed to obtain the desired dilution or calibration gas concentration. Meter the desired amount of gas into the bag. If the purpose of the static dilution is to prepare a lower concentration of calibration gas, the calibration gas should be added to the bag using a gas tight syringe. Record the data on the static dilution system data form, Figure 2.6 or similar form. If the purpose of the static dilution system is to collect a diluted stack sample, the calculated amount of diluent gas is added to the bag and the stack gas is metered into the bag from the stack. To calibrate this system, the calculated amount of diluent gas should be metered into the bag and then a calibration gas should be metered into the bag with the flowmeter that is to be used in the field. Record the data on the static dilution system data form, Figure 2.6 or similar data form.
3. Analyze the diluted calibration gas and analyze a different calibration gas that is in the range of the diluted calibration gas. The two gases must agree within 10% of each other for the system to be acceptable.

2.3 Thermometer

The thermometers(s) on the metering systems and the sample probes and lines should be initially compared with a mercury-in-glass thermometer that meets ASTM E-1 No. 63C or 63F specifications:

1. Place the thermometer to be calibrated and the mercury-in-glass thermometer in a bath of boiling water. Compare the readings after the bath stabilizes and then record on the calibration data form, Figure 2.7 or equivalent.
2. Allow both thermometers to come to room temperature. Compare the readings after the thermometers stabilize.
3. The thermometer is acceptable if the values agree within 3°C (5.4°F) at both points.
4. Prior to each field trip, compare the temperature reading of the mercury-in-glass thermometer at room temperature with that of the thermometer that is part of the metering system. If the values are not within 6°C (10.8°F) of each other, replace or recalibrate the meter thermometer.

2.4 Barometer

The field barometer should be adjusted initially and before each test series to agree within 2.54 mm (-0.1 in.) Hg with a mercury-in-glass barometer or with the pressure value reported from a nearby National Weather Service Station and corrected for elevation. The tester should be aware that the National Weather Service readings are normally corrected to sea level; uncorrected readings should be obtained. The correction for the elevation difference between the weather station and the sampling point should be applied at a rate of -2.5 mm Hg/30 m (-0.1 in. Hg/100 ft) elevation increase, or vice versa for elevation decrease.

Date	2/19/88	Calibrated by	J.D. Goodrich
Source flowmeter number	D-1	Date source meter calibrated	1/28/88
Dry gas meter number	DM-17	Date dry gas meter calibrated	1/18/88
Ambient temperature	20.5 °C (°F)	Dry gas meter calib factor (Y)	1.003
Barometric press	761 mm (in.) Hg	Leak check for total system	OK
Organic compound	Perchloroethylene	Vacuum during leak check	10 in. Hg
Certified concen, (X)	2210 ppmv	Date of calibration curve	2/29/88

	RUN 1	RUN 2	RUN 3
Initial dry gas meter reading, L (ft^3)	131.621	132.400	133.285
Final dry gas meter reading, L (ft^3)	132.316	133.161	133.996
Volume of diluent gas metered, L (ft^3)	19.680	21.548	20.133
Gas metered X calibration factor (Y), $\{V_2\}$	19.739	21.613	20.193
Flowmeter sampling rate, L/min (cfm)	0.152	0.152	0.152
Sampling time, min	20	20	20
Sampling rate X sample time, L (ft^3), $\{V_1\}$	3.04	3.04	3.04
Dilution ratio	7.493	8.110	7.642
Injection time, 24h	14:31	15:03	15:35
Distance to peak, cm	28.3	28.6	28.5
Chart speed, cm/min	10	10	10
Retention time, min	2.83	2.86	2.85
Attenuation factor	4	4	4
Peak area or units	3050	2821.5	3040
Peak area X attenuation factor	12200	11286	12160
Measured concentration,[a] ppmv	291.8	270	290.9
Calculated concentration,[b] ppmv, $\{C_s\}$	295	273	289
Percent difference,[c] %	-1.1	-1.8	+0.3

[a] See Figure 5.1 for calculation.

[b] Calculated concentration $(C_s) = \dfrac{\bar{X}\,(V_1)}{(V_1 + V_2)} = _____$ ppmv

[c] Percent difference, $\%d = \dfrac{\text{Measured concent} - \text{Calculated concent}}{\text{Measured concentration}} \times 100 = ____$ %

The percent difference must be less than 10 % absolute.

Figure 2.6. Static dilution data form.

Date	Reference thermometer type	Calibrated thermometer type	use	no.	Measured values: Ambient temperature refer[a]	calibr[b]	differ[c]	Boiling water refer[a]	calibr[b]	differ[c]	Calibrator's initials
1/28/88	ASTM 68F	Thermo-Couple	stack	TM-12	69°F	71°F	+2°F	212°F	213°F	+1°F	ATM
1/28/88	ASTM 68F	thermo-Couple	heater box	B-2	69°F	70°F	+1°F	212°F	211°F	-1°F	ATM

[a] Temperature reading of the reference thermometer in °C or °F.
[b] Temperature reading of the thermometer being calibrated in °C or °F.
[c] Difference between the reference thermometer and the calibrated thermometer. This difference must be less than 3°C (5.4°F) for than initial calibration and 6°C (10.4°F) for the calibration check.

Figure 2.7. Thermometer calibration form.

Table 2.1. ACTIVITY MATRIX FOR CALIBRATION OF EQUIPMENT

Apparatus	Acceptance limits	Frequency and method of measurement	Action if requirements are not met
Wet test meter	Capacity of about 2 L/min and accuracy within 1%	Calibrate initially, then yearly by liquid displacement	Adjust until specs are met, or return to vendor
Dry gas meter, mass flow meter, and rotameters	$Y_i = Y \pm 0.03Y$ at a point greater than the flow rate range to be used	Calibrate vs. wet, dry, or bubble meter upon receipt and after each test	Repair and then recalibrate, or replace
Critical orifice	$K'_i = K \pm 0.03K'$	Calibrate vs. wet, dry, or bubble meter upon receipt and after each test	Repair and then recalibrate, or replace
Dilution system	Measured value for diluted and undiluted calibration gas must agree within 10%	Calibrate upon receipt and prior to each field test using calibration gases	Correct problem and rerun calibration
Thermometers	Within 3°C (5.4°F) of true value	Calibrate initially as a separate component with mercury-in-glass thermometer; check before each test against mercury-in-glass thermometer	Adjust or replace
Barometer	Within 2.5 mm (0.1 in.) Hg of mercury-in-glass barometer or weather station value	Calibrate initially using mercury-in-glass barometer; check before and after each test	Adjust to agree with certified barometer

3.0 PRESAMPLING OPERATIONS

This section addresses two major areas of presampling operations for Method 18: (1) preparation for, performance of, and interpretation of results for the preliminary survey and (2) preparation for the final sampling. This section describes the preliminary survey as it applies to Method 18; for additional general information on preliminary surveys, see Section 3.0 of this Handbook. The quality assurance activities for the preliminary survey activities and the presampling activities for final testing are summarized in Tables 3.1 and 3.2, respectively, at the end of this section.

3.1 Preliminary Survey Measurements

The preliminary survey measurements are needed to properly design the final emission test sampling and analysis protocol. The primary objective of the preliminary survey is to collect a preliminary survey sample for determining which sampling procedure is most appropriate and for developing the optimum analytical procedures. Using the preliminary survey sample, estimates of the source concentration are made and the major organic components in the gas stream are identified. Also, any compounds that may interfere with the quantitation of the target analyte(s) are identified and the appropriate changes in the analytical procedures are made. Other measurements made during the preliminary survey include sampling site dimensions and gas stream properties. The preliminary survey is also used to obtain a description of the process being sampled, to determine sampling logistics, and, when possible, to collect bulk process samples and use emission screening techniques. Use the data form shown in Figure 3.1 to record the preliminary survey information.

3.2 Preliminary Survey Preparation

This section addresses the equipment and preparatory activities needed to conduct the preliminary survey. Figure 3.2 can serve as an equipment checklist, packing list, and/or equipment status form for the preliminary survey.

3.2.1 *Measurement of Flue Gas Properties* - The apparatus that may be required to supplement information obtained from plant personnel during the preliminary survey concerning the moisture level, temperature, and static pressure of the source should be prepared for the preliminary survey as follows:

Barometer - The field barometer should be compared with a mercury-in-glass barometer or with a National Weather Service Station (see Subsection 2.4) reading prior to each field test.

Wet Bulb/Dry Bulb Thermometers - It is recommended that for sources with stack temperatures at or below 59°C, wet bulb/dry bulb thermometers be used to determine stack gas moisture content. The thermometers should be compared with a mercury-in-glass thermometer at room temperature prior to each field trip. The wet bulb/dry bulb measurement may also be used, with the prior approval of the Administrator, to determine stack gas moisture for sources where the stack temperature exceeds 59°C.

Method 4 Equipment - For sources with stack temperatures above 59°C, Method 4 equipment is recommended to determine stack gas moisture content. Prepare the

I. Name of company _____ Date _____
Address _____
_____
Contacts _____ Phone _____
_____ _____
Process to be sampled _____
_____
_____
Duct or vent to be sampled _____
_____

II. Process description _____
_____
_____
_____
_____
Raw material _____
_____
Products _____
_____
Operating cycle
Check: Batch _____ Continuous _____ Cyclic _____
Timing of batch or cycle _____
Best time to test _____

III. Sampling site
A. Description
Site description _____
Duct shape and size _____
Material _____
Wall thickness _____ inches
Upstream distance _____ inches _____ diameter
Downstream distance _____ inches _____ diameter
Size of port _____
Size of access area _____
Hazards _____ Ambient temp _____ °F

B. Properties of gas stream
Temperature _____ °C _____ °F, Data source _____
Velocity _____, Data source _____
Static pressure _____ inches H_2O, Data source _____
Moisture content _____ %, Data source _____
Particulate content _____, Data source _____
Gaseous components

		Hydrocarbons (ppm)	Toxics/Acids (ppm)	
N_2	_____ %			
O_2	_____ %	_____	H_2S	_____
CO	_____ %	_____	HCl	_____
CO_2	_____ %	_____	HF	_____
SO_2	_____ %	_____	Other	_____

Figure 3.1. Preliminary survey data sheet.

(Continued)

Figure 3.1 (Continued)

Hydrocarbon components

_____ _____ ppm
_____ _____ ppm
_____ _____ ppm
_____ _____ ppm
_____ _____ ppm
_____ _____ ppm

C. Sampling considerations
Location to set up GC_____
_____
Special hazards to be considered_____
_____
Power available at duct_____
Power available for GC_____
Plant safety requirements_____
_____
Vehicle traffic rules_____
_____
Plant entry requirements_____
_____
Security agreements_____
_____
Potential problems_____
_____
Safety equipment (glasses, hard hats, shoes, etc.) _____
_____

D. Site diagrams. (Attach additional sheets if required).

IV. On-site collection of preliminary survey samples

A. Evacuated flasks
Flasks have been cleaned, heated in furnace and purged with nitrogen?_____
Flask evacuated to the capacity of pump?_____
Filter end of probe placed at center of stack, probe purged and sampled collected into flask until flask is at stack pressure?_____
Stopcocks closed and taped?_____
Duct temperature and pressure recorded?_____

B. Purged flasks
Flasks cleaned and purged with nitrogen?_____
Filter end of probe placed into stack, sample purged for 2 to 5 min and then stopcocks closed?_____
Stopcocks taped to prevent leakage?_____
Duct temperature and pressure recorded?_____
Stability and adsorption checks conducted?_____

(Continued)

Figure 3.1 (Continued)

C. Flexible bags
Bags have been blanked checked and leak checked?_____
Sampling system leak checked?_____
Filter end of probe placed into center of stack and sample obtained at a proportional rate for appropriate amount of time?_____
Duct temperature, barometric pressure, ambient temperature, flow rate, static pressure, and initial and final sampling time recorded?_____
Analysis performed within 2 hr?_____
Stability and adsorption checks conducted?_____

D. Adsorption tubes
Proper adsorption tube(s) selected based on the likely analytes?_____
Probe or adsorption tube placed into center of stack and sample obtained at a constant rate with a calibrated system for appropriate time based on the expected concentrations of analytes?_____
Total sample time and sample flow rate (or the number of pump strokes), the barometric pressure, and ambient temperature recorded?_____
Water vapor was less than 2% or measures were taken to protect or increase the adsorption capacity of the adsorption tube(s)?_____

E. Quality assurance performance audit samples
Quality assurance audit samples collected in the same manner as the emission samples?_____

F. Bulk samples and screening techniques
Bulk emission sample(s) collected?_____
Bulk liquid sample(s) collected?_____
Detector tubes or other screening techniques used?_____

Apparatus check	Acceptable		Quantity Required	Ready		Loaded and Packed	
	Yes	No		Yes	No	Yes	No
Moisture Determination *W Bulb/D Bulb*_____ *Checked* *Barometer* *Calibrated** *Method 4* *Probe, heated & leak checked* *Impingers* *Meter system calibrated**							
Velocity Determination *Pitot Tube* *Number*_____ *Length*_____ *Pressure Gauge* *Manometer*_____ *Other*_____ *Stack Thermometer* *Calibrated*_____							
Evacuated Flask *Evacuated Flasks* *Number*_____ *Cleaned* *Oven heated* *N_2 purged* *Probes* *Number*_____ *Cleaned* *Glass wool* *Suction bulb* *Pump*							
Purged Flask *Flask* *Number*_____ *Cleaned* *Oven heated* *N_2 purged*							

*Most significant items/parameters to be checked.

Figure 3.2. Preliminary survey preparations.

(Continued)

Figure 3.2 (Continued)

Apparatus check	Acceptable		Quantity Required	Ready		Loaded and Packed	
	Yes	No		Yes	No	Yes	No
Purged Flask (continued)							
Probe							
*Number*_____							
Cleaned							
Glass wool							
Vacuum Source							
*Pump*_____							
*Squeeze bulb*_____							
Bag Sampling							
Probe Liner							
*S steel*_____							
*Glass*_____							
*Teflon tube*_____							
*Length*_____							
Meter System							
*Flowmeter**_____							
*Pump*_____							
*Evacuated can*_____							
Charcoal tube							
Sample line							
Tedlar Bags							
*Number*_____							
Blank checked							
*Leak checked**							
Heated Box							
*Number*_____							
Heat checked							
Adsorption Tube							
Probe							
*Heated*_____							
Checked							
*Nonheated*_____							
*Glass*_____							
*S steel*_____							
Filter							
Sample Line							
*Type*_____							
*Length*_____							
*Checked**							

*Most significant items/parameters to be checked.

(Continued)

Figure 3.2 (Continued)

Apparatus check	Acceptable		Quantity Required	Ready		Loaded and Packed	
	Yes	No		Yes	No	Yes	No
Adsorption Tube (continued)							
Pump and Meters							
Pump							
*Orifice*_____							
*Calibrated**							
*Rotameter*_____							
*Calibrated**							
Timer							
Adsorption Tubes							
*Type*_____							
Bulk Samples							
20-ml Jars							
Cleaned							

*Most significant items/parameters to be checked.

equipment for sampling following the procedures described in Section 3.3.3 of this Handbook. Method 4 equipment may also be used to determine the stack gas moisture for sources where the stack temperature is at or below 59°C.

S-Type Pitot Tube and Differential Pressure Gauge - Prepare the S-type pitot tube and the differential pressure gauge for sampling following the procedures described in Section 3.1.3 of this Handbook.

3.2.2 *Glass Flask Sampling* - The apparatus and reagents required for the collection of preliminary survey samples using glass sampling flasks are prepared as described below. Alternative equipment found suitable may be used subject to the approval of the Administrator.

Probe - If a heated probe is to be used for sampling, then the probe's heating system should be checked to see that it is operating properly. The probe should be cleaned internally by brushing first with tap water, then with deionized distilled water, and finally with acetone. Allow the probe to air dry. The probe should be sealed at the inlet end and checked for leaks by applying a vacuum of 380 mm (15 in.) Hg. See Subsection 1.0 for leak check procedure. The probe is considered leak free under these conditions if no loss of vacuum is seen after one minute. Any leaks detected should be corrected or the probe should be rejected. If the probe has an external sheath, the integrity of the seal between the sheath and the probe liner should be checked to ensure ambient air does not dilute the gas sample.

Teflon Tubing - Prepare sections of tubing for connections between the probe and each flask (or bag or tube) that constitutes a preliminary survey sample collection device. Clean the tubing using the procedure described above for the probe.

Quick Connects - The quick connects should be new or cleaned according to the manufacturer's recommendations. Leak check the quick connects as described in Subsection 1.0.

Glass Sampling Flasks - Prepare the glass sampling flasks for collecting preliminary survey samples as follows: Remove the stopcocks from both ends of the flasks, and wipe the parts to remove any grease. Clean the stopcocks, barrels, and receivers with chloroform. Clean all glass parts with a soap solution, then rinse with tap water followed by deionized distilled water. Place the flasks in a cool glass annealing furnace and heat the furnace to 550°C. Maintain the flasks in the oven at this temperature for one hour. After one hour, shut off and open the furnace to allow the flasks to cool. Return the Teflon stopcocks to the glass flasks (if glass stopcocks are used, apply a light coating of vacuum grease to the stopcocks before returning to the flasks.) With both stopcocks open, purge each assembled flask with high purity nitrogen for 2 to 5 minutes. Close off the outlet stopcock followed by the inlet stopcock to maintain a slight positive nitrogen pressure in the flask. Secure the stopcocks with tape to prevent them from opening accidentally.

High-Vacuum Pump - A high-vacuum pump will be required for preliminary survey sample collection using the evacuated flask procedure. Check the operation of the pump prior to going to the field as follows: Check for minimum pump vacuum of 75 mm (3 in.) Hg absolute by attaching a Hg-filled U-tube manometer to the pump inlet

and turning on the pump. If the minimum vacuum cannot be reached, then repair or replace the pump.

Rubber Suction Bulb - A rubber suction bulb will be required for preliminary survey sample collection using the purged flask procedure. The rubber suction bulb should be checked for proper operation prior to going to the field as follows: Attach the bulb to a water manometer, or equivalent, and squeeze the bulb until a vacuum of at least 250 mm (10 in.) H_2O is reached. Repair or replace the squeeze bulb if sufficient vacuum cannot be developed.

3.2.3 *Flexible Bag Procedure* - A flexible bag of Tedlar or aluminized Mylar can be used to collect preliminary survey samples. If it is anticipated that Tedlar bags will be selected as the final sampling method, then it is recommended that the preliminary survey sample be collected using a Tedlar bag. In addition to the apparatus described in Subsection 3.2.2 for the glass flasks (with the exception of the flasks and the high-vacuum pump) the apparatus listed below will be required and should be prepared as follows:

Tedlar or Aluminized Mylar Bags - Prepare new bags for preliminary survey sampling by leak checking the bags before going to the field. The bags should also be checked for contamination by filling with hydrocarbon-free air or nitrogen during the leak check. The bags are checked as follows: Connect a water manometer, or equivalent, using a tee connector, between the check valve quick connect on the bag and a pressure source (or hydrocarbon-free air or nitrogen for conducting the contamination check). Pressurize the bag to 5 to 10 cm (2 to 4 in.) H_2O. Loss of pressure over a 30-second period indicates a leak. Alternatively, leave the bag pressurized overnight: a deflated bag the following day is indicative of a leak. Reject or repair any bags with leaks. After the hydrocarbon-free air or nitrogen has remained in the bag for 24 hours, analyze the bag contents using a GC with a flame ionization detector on the most sensitive setting. The bag should be rejected if any organic compounds are detected. If any organic compounds are detected, the bags may be used if they are not the compounds to be sampled and analyzed.

Rigid Leak-Proof Containers - Rigid containers can be used with the bags for collecting preliminary survey samples. The rigid containers used to contain the Tedlar bags during sampling should be checked for leaks prior to going to the field. The container should be leak checked with the bag in place as follows: Using a tee connector, connect a water manometer or equivalent, between a pressure source and the container outlet. Pressurize the container to 5 to 10 cm (2 to 4 in.) Hg. Any loss of pressure after 30 seconds indicates a leak. Reject or repair the rigid container if a leak is indicated.

Direct Pump Sampling System - A direct pump sampling system can be used in place of the rigid containers for collecting preliminary survey samples. If this method is selected, then the system should be assembled and leak checked prior to going to the field as follows: Assemble the system (see Figure 4.5). Bypass the Tedlar bag and its protective container by attaching the vacuum line directly after the rotameter using the quick connects on the sample and vacuum lines. Plug the probe inlet and turn on the vacuum pump. If the system is leak free, the rotameter should eventually indicate no flow. Alternatively, the sample line that is attached to the sample bag can be placed in water. If bubbling stops, then the system is leak free.

Needle Valve and Rotameter - Prior to each field trip or at any sign of erratic behavior, the flow control valve and the rotameter should be cleaned according to the maintenance procedure recommended by the manufacturer.

3.2.4 *Adsorption Tube Sampling* - The adsorption tube sampling procedure can also be used to collect the preliminary survey sample. If it is anticipated that adsorption tubes will be selected as the final sampling method, then it is recommended that the preliminary survey samples be collected using tubes containing each potential type of adsorbent. In addition to the apparatus described in Section 3.2.1 for the glass flasks (with the exception of the flasks and a high-vacuum pump) the apparatus listed below will be required and should be prepared as follows:

Adsorption Tubes - Check to see that the proper type of tube has been obtained for collecting the target organic compounds. Refer to Table B in the Methods Highlights Section to determine the proper adsorption material. Check to see that the supply of adsorption tubes is sufficient to conduct the emission test, including field blanks and desorption efficiency determinations.

Personnel Sampling Pump - A personnel sampling pump is used to collect the adsorption tube samples. The pump should be calibrated following the procedures described in Subsection 2.1.4.

Extraction Solvents - An extraction solvent will be required to prepare the preliminary survey adsorption tube sample(s) for analysis. Refer to Table B in the Methods Highlights Section to determine the proper extraction solvent.

3.3 Preliminary Survey Sample Collection

The preliminary survey sample collection includes flue gas or duct moisture and velocity determinations in addition to collection of actual flue gas or duct samples.

3.3.1 *Preliminary Survey Moisture Determination* - If the moisture content of the flue gas in the duct to be tested cannot be obtained from the plant personnel, it is determined using either wet bulb/dry bulb thermometers or Method 4 sampling apparatus, depending on the flue gas temperature. If the flue gas temperature cannot be obtained from plant personnel, then determine the flue gas temperature using a calibrated thermocouple, thermometer, or equivalent temperature measuring device.

Wet Bulb/Dry Bulb Procedure - For flue gas streams at or below 59°C, the moisture content of the flue gas should be determined using wet bulb/dry bulb thermometers and the partial pressure equation shown below. Obtain the wet bulb/dry bulb temperatures as follows:

1. Moisten the wet bulb thermometer wick with deionized distilled water.
2. Insert the thermometers into the flue gas stream and monitor the wet bulb temperature.
3. When the wet bulb temperature has stabilized, record both the wet bulb and dry bulb thermometer temperatures.
4. Calculate the flue gas moisture content using the equations below.

$$w_2 = \frac{10^{(6.6911-(3144/(Tw+390.86)))}}{P_b + (P_s/13.6)}$$ Equation 3-1

$$\%H_2O = w_2 - (0.000367 \times (T_d - T_w) \times (1+(T_w-32)/1571)) \times 100$$ Equation 3-2

where

w_2 = Calculated constant, saturation % H_2O at T_w,
T_w = Wet bulb temperature, °F,
T_d = Dry bulb temperature, °F,
P_b = Barometric pressure, in. Hg, and
P_s = Static pressure of duct, in. H_2O.

Method 4 Moisture Procedure - Follow the procedure for Method 4 described in Section 3.3 of this Handbook.

Method 2 Velocity Procedure - Follow the procedure for Method 2 described in Section 3.1 of this Handbook to determine the flue gas or duct velocity at the sampling point. If the velocity varies by more than 10% during the projected sample run time, then proportional sampling will be required as described in Subsection 4.0. Because of the small size of some ducts, Methods 2A, 2C, or 2D may have to be used. Follow the criteria and procedures described in the applicable method.

3.3.2 *Collection of Samples with Glass Sampling Flasks* - Using the precleaned glass sampling flasks, preliminary survey samples are collected using the evacuated flask procedure or the purged flask procedure.

Evacuated Flask Procedure - Collect preliminary survey samples using the evacuated flask procedure as follows:

1. Using a high-vacuum pump which is connected to one stopcock while the other stopcock remains closed, evacuate each precleaned flask to the capacity of the pump. A mercury manometer can be connected between the pump and the flask using a tee connector to indicate when the maximum vacuum is achieved. At this point, record the vacuum, and close off the stopcock leading to the pump.
2. Remove the tubing leading to the pump and attach a glass tee (6-mm outside diameter, or equivalent) to the flask inlet with a short piece of Teflon tubing.
3. Connect the end of the sampling probe to the glass tee using a short length of Teflon tubing. The tubing must be of sufficient length to reach the sampling point at the centroid of or no closer than 1 meter to the duct wall.
4. Connect the rubber suction bulb to the third leg of the tee with a piece of Teflon tubing or suitable flexible tubing.
5. Place a plug of glass wool in the probe inlet, enlarged to approximately 12-mm outside diameter, to serve as a filter to remove particulate matter.
6. Place the inlet (filtered) end of the probe at the sampling point and purge the probe and sample line by repeatedly squeezing the rubber suction bulb until at least 7 air changes of the probe and sample line have occurred.

7. After the probe and the sample line are completely purged, leave the squeeze bulb in place, and open the inlet stopcock of the sampling flask
8. Leave the inlet stopcock open until the pressure in the sampling flask. reaches the duct pressure. This should take about 15 seconds. Close the inlet stopcock.
9. Remove the probe from the duct and disconnect the glass tee from the flask.
10. Tape the stopcocks closed and label the flask with the plant name, date, and sampling location, time, and sampling personnel.
11. Immediately after sampling, determine the flue gas temperature with a calibrated thermocouple, thermometer, or equivalent temperature measuring device, and determine the static pressure of the duct and the velocity over a period of time equal to the predicted sample run time following the procedures described in Section 3.1 in this Handbook.

Purged Flask Procedure - Collect preliminary survey samples using the purged flask procedure as follows:

1. Connect the small end of the sampling probe, of sufficient length to reach the centroid of the duct to be sampled, to the inlet stopcock of a precleaned glass sampling flask a sufficient length of Teflon tubing.
2. Connect the rubber suction bulb to the other stopcock with a piece of Teflon tubing or suitable flexible tubing.
3. Place a plug of glass wool in the probe inlet, enlarged to approximately 12-mm OD, to serve as a filter to remove particulate matter.
4. Place the inlet (filtered) end of the probe at the centroid of or no closer than 1 meter to the duct wall.
5. Purge the probe, sample line, and sample flask by repeatedly squeezing the rubber suction bulb until approximately 7 air changes of the system have occurred.
6. After the probe, sample line, and flask are completely purged, close off the stopcock near the suction bulb, and then close off the stopcock connected to the probe.
7. Remove the probe from the duct, and disconnect both the probe and the suction bulb from the flask.
8. Tape the stopcocks closed and label the flask with the plant name, date, and sampling location, time, and sampling personnel.
9. Immediately after sampling, determine the flue gas temperature with a calibrated thermocouple, thermometer, or equivalent temperature measuring device, and determine the static pressure of the duct and the velocity over a period of time equal to the predicted sample run time following the procedures described in Section 3.1 in this Handbook.

3.3.3 *Flexible Bag Procedure* - The flexible bags used to collect preliminary survey samples must be leak checked and demonstrated to be free of contamination following the procedure described in Subsection 3.2.2. The preliminary survey sample collection using flexible bags can be conducted at a constant rate following the procedure described in Subsection 4.3 for the evacuated container sampling procedure, the direct pump sampling procedure, or, in explosive areas, the explosion risk area sampling procedure. The flue gas or duct velocity and other process parameters should be determined for designing the final sampling procedures.

3.3.4 *Adsorption Tube Procedure* - The adsorption tubes used to collect the preliminary survey sample(s) should contain the adsorbent specified in Table B of the Method Highlights Section for the target analyte(s). The sampling time or total sample volume for the adsorption tube should be calculated based on expected concentration(s) of the volatile organic(s) present and the recommended capacity of the adsorption media. Refer to the appropriate reference given in Table B to determine the recommended sample volume taking into consideration the amount of adsorbent to be used. For compounds not referenced in Table B, use a reference for a compound with similar chemical characteristics. If the target analytes require different adsorption media, then it is recommended that preliminary survey samples be collected using each type of adsorbent. In the case where the compound is unlike any other documented compounds, use two adsorption tubes connected in series. Once a recommended volume is established, it is recommended that two additional samples be collected with sample volumes one half and twice the recommended volume. The procedure for collecting preliminary survey adsorption tube samples is as follows:

1. Open the adsorption tube, and connect the primary tube section (large section of adsorbent) to the sampling probe using a minimum length of Teflon tubing or other nonreactive tubing.
2. Connect the outlet (backup section) of the tube to the next tube in series, if additional adsorption capacity is required.
3. Connect the outlet of the last tube to the inlet of the calibrated personnel sampling pump using a sufficient length of tubing.
4. Insert the probe into the stack or duct and turn on the pump. Maintain the adsorption tubes in a vertical position during sampling to prevent channeling. Sample the gas stream for the time required to obtain the optimal volume determined from the referenced method.
5. Immediately after sampling is completed, disconnect the tubes from the tubing and seal the tube ends with teflon tape and plastic caps. Label the tubes and store each tube in a screw cap culture tube or similar container to protect them during shipment.
6. Record the total sampling time, the sample flow rate, the barometric pressure, and the ambient temperature.

3.4 Preliminary Survey Sample Analysis and Interpretation

With the exception of the analysis of the glass sampling flasks, the analysis of preliminary survey samples should follow the procedures described in Subsection 5.0. The analysis of the glass sampling flasks are described below (see Subsection 3.4.2). The analysis of preliminary survey samples is used to optimize the analytical procedures and select the most appropriate sampling technique for final sampling. Using Table C the Method Highlights Section, choose appropriate GC detector(s). Based on the sampling technique(s) used to collect the preliminary sample, choose a GC column from the selections listed in Table D of the Method Highlights Section; the technical service department of column manufacturers or plant laboratory personnel may also be consulted for additional suggestions on column type(s). For glass flask samples and Tedlar or Mylar bag samples, use calibration gas cylinders or calibration standards prepared in Tedlar bags. For adsorption tube samples, prepare the calibration standards directly in the desorption liquid(s) or on adsorption tube material(s) used to collect the samples.

3.4.1 *Calibration Standards for Preliminary Survey Samples* - Prepare a minimum of three calibration standards for each compound of interest. The standards should

cover a linear range for the particular GC detector, with the lowest standard and the highest standard bracketing and a midrange standard approximating the expected sample concentration. To estimate the sample concentration, prepare a preliminary survey sample and perform a single analysis of the sample following the procedure in the appropriate subsections below. During this sample analysis, determine if adequate resolution has been achieved for each peak with a peak area greater than 5% of the total chromatographic peak area (excluding the desorption solvent peak) using one of the procedures described in Subsection 3.4.1. Adequate resolution of sample peaks will only be necessary in the chromatographic region(s) where the target compound(s) are expected to elute. The GC analysis conditions and/or column can be changed to achieve adequate resolution. The use of two different columns may be necessary to ensure accurate identification of the gases. For analysis of more than one target compound in very complex sample matrices, more than one analysis using different GC conditions and/or columns may be required to achieve adequate resolution for all target compounds.

For analysis of flask samples or bag samples, (1) use cylinder gases directly (if available) or by dilution following the procedures described in Subsection 5.1.1 and 5.1.2, respectively, or (2) prepare standards in Tedlar bags following the procedure described in Subsection 5.1.3 for gaseous materials or the procedure described in Subsection 5.1.4 for liquid materials. For analysis of adsorption tube samples, prepare calibration standards following the procedure described in Subsection 5.1.6. Data forms should be used for recording calibration standard preparation and analysis data (see Figures 5.4, 5.6, 5.8, and 5.9) and preliminary survey sample analysis data (see Figure 5.1).

The gaseous calibration standards for bag samples must be injected into the GC using a gas sampling valve equipped with a stainless steel or Teflon sample loop following the procedures described in Subsection 5.1 appropriate for the particular type of gaseous standard used. Liquid calibration standards for adsorption tube analysis must be injected into a heated sample injection port following the procedure described in Subsection 5.1.6. The gaseous standards for glass flask samples can be injected into the GC using either a gas sample valve, following the appropriate procedure in Subsection 5.1 for the particular gaseous standard used, or a heated injection port using a gas tight syringe following the procedure described below; the same injection procedure used for the standards must be used for the flask samples.

The procedure for injecting gaseous calibration standards using a gas tight syringe is as follows:

1. Attach a GC septum to a piece of Teflon tubing and attach the tubing to the outlet of the calibration gas cylinder regulators or the Tedlar bags containing the calibration gases.
2. Insert the needle of the syringe through the septum, and repeatedly purge the syringe by repeatedly filling and emptying the syringe 7 times.
3. After purging the syringe, fill the syringe past the mark corresponding to the desired amount to be injected, and withdraw the syringe from the septum. Stick the needle into a rubber stopper or a thick septum to prevent dilution of the standard by ambient air.
4. Immediately before injecting the standard, remove the needle from the stopper or septum, adjust the syringe to the desired volume, and inject the standard into the heated injection port on the GC. Note the time of injection on the strip chart and/or actuate the electronic integrator.
5. Repeat the injection of the standard until the peak areas from consecutive injections agree within 5% of their average value.

Perform initial tests using the calibration standards to determine the optimum GC conditions to minimize analysis time while still maintaining sufficient resolution. Sufficient resolution can be determined following the procedure described by Knoll[42] or in EPA Method 625[44] where the baseline to valley height between two adjacent peaks must be less than 25% of the sum of the two peak heights (see Figure 3.3).

Analyze the calibration standards, starting with the lowest concentrations first. Repeat each standard analysis until two consecutive injections give individual area counts within 5% of their average. Multiply the average of the response for the two acceptable consecutive injections of each standard by the detector attenuation to determine the calibration area value for each standard. Record the retention time for each compound and the calibration area for each standard. Record the detector settings, the recorder/integrator attenuation for each standard, the chart speed, the GC temperature settings, the column parameters (type and length), and the carrier gas flow rate. Plot the concentration of the standards on the abscissa (x-axis) and the calibration area for each standard on the ordinate. Perform a regression analysis, and draw the least squares line on the plot. It is recommended, but not required for preliminary survey sample analysis, that the validity of the calibration curve be checked using the audit procedures described in Section 8.0. The audit sample may be analyzed at this time in lieu of analysis during the final sample analysis with the prior approval of the Administrator.

If positive identification of a target compound cannot be made by comparison of the compound retention time to the retention time of one of the standards, then use of a different type of column may be helpful. If positive identification still cannot be achieved, then GC/mass spectrometry (GC/MS) or GC/infrared (GC/IR) techniques should be used, with GC/MS recommended. In addition, any compounds, not identified as target compounds, with peak areas greater than 5% of the total chromatographable peak area (excluding the solvent peak area for adsorption tubes) should be identified by comparison to known standards or by using GC/MS.

3.4.2 *Glass Flask Preliminary Sample Analysis* - Since glass sampling flasks are only used for preliminary survey samples, the analysis of the flasks is described in this section. Glass sampling flasks require some pressurization prior to analysis to withdraw the sample.

Using the ideal gas law, the amount of dilution of the sample that results from pressurization can be estimated with enough accuracy to permit interpretation of the preliminary survey sample results. The procedure for pressurizing a flask is as follows:

1. Note if any condensation has collected in the flask. If it has, heat the flask to the flue gas or duct temperature with an oven, heating tape, or a heat lamp. Note: The pressurization of sealed glass containers by heating is an inherently hazardous process. The use of a protective shield to protect personnel from flying glass in the event of an explosion is highly recommended. In addition, the flask should be wrapped in cloth or other cushioning media during these operations.
2. Connect one end of the flask to a mercury manometer, open the stopcock, and determine the initial pressure of the flask (P_i). Record P_i and the initial absolute flask temperature (T_i) in °R or °K.
3. Connect the other end of the flask to a source of hydrocarbon-free nitrogen or air, and open the stopcock. Slowly pressurize the flask to a maximum of 15 psig, and close the stopcock. Determine the final pressure of the flask (P_f) and the final absolute temperature of the flask (T_i).

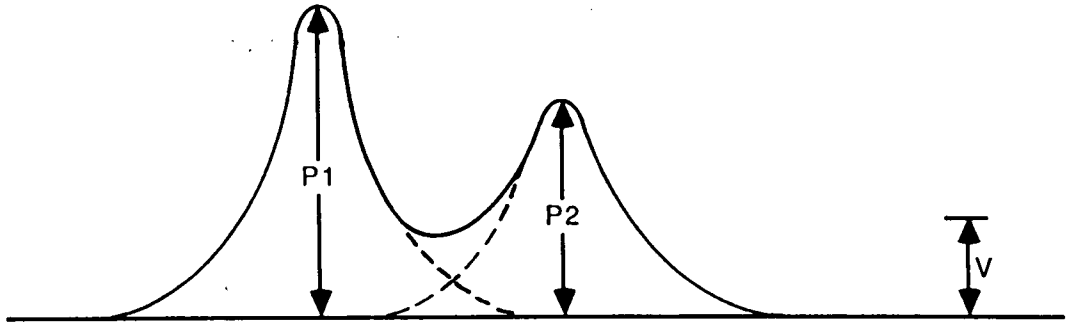

$$V < \frac{P_1 + P_2}{4}$$

Figure 3.3. Diagram showing EPA Method 625 criterion for adequate resolution of overlapping compounds with similar mass spectra.

Note: The pressurization of sealed glass containers is an inherently hazardous process. The use of a protective shield to protect personnel from flying glass in the event of an explosion is highly recommended. In addition, the flask should be wrapped in cloth or other cushioning media during these operations.

4. Calculate the first dilution factor (D_1) using the following formula:

$$D_1 = \frac{P_f \times T_i}{T_f \times P_i} \qquad \text{Equation 3-2}$$

5. Allow the flask to equilibrate for 10 minutes. Note if any condensation has formed. If condensation has formed in the flask and the flask did not initially required heating, heat the flask to a temperature sufficient to vaporize the condensate. If the condensate cannot be vaporized or if the flask was already heated and more condensate formed during pressurization, the sample cannot be analyzed accurately.
6. Close the stopcocks and disconnect the manometer and dilution gas.

Analyze the contents of a pressurized flask using a sample introduced into the GC via a gas sampling valve by the following procedure:

1. Connect the sample flask to the injection valve with the valve in the load position.
2. Open the stopcock connected to the valve, and allow the gas sample to flow through the sample loop at 100 ml/min for 30 seconds (determined with a rotameter connected to the outlet of the sample loop) or purge with 5 times the sample loop volume, whichever is less. Close the stopcock, and allow the sample loop to return to ambient pressure.
3. Actuate the sample valve to inject the sample and record the injection time.
4. Examine the chromatogram and determine if adequate resolution has been achieved between individual target compound peaks and between target compound peaks and any interfering compound peak with an area greater than 5% of the total area of all peaks (excluding the desorption solvent peak) using the procedure described in Subsection 3.4.1.
5. Determine the retention time for each peak by dividing the distance of the peak maximum from the injection point by the chart speed.
6. Repeat the analysis, and determine the peak area and retention time for each target compound identified during the second analysis. Although not required for the preliminary survey sample analysis, the peak areas for each target compound from consecutive injections should agree within 5% of the average peak area. The retention times between the two injections should agree within 0.5 seconds or 1% of the adjusted retention time (compound retention time minus the time of elution of unretained peaks), whichever is greater.

Analyze the contents of a pressurized flask using a sample introduced into the GC via a gas tight syringe and a heated injection port sample by the following procedure:

1. Attach a GC septum to one of the stopcocks on the glass flask. (Note: Glass sampling flasks can be purchased with an integral septum port.)
2 Insert the needle of the syringe through the septum, and purge the syringe by repeatedly filling and emptying the syringe 7 times.
3. After purging the syringe, fill the syringe past the mark corresponding to the desired amount to be injected, and withdraw the syringe from the

septum. Stick the needle into a rubber stopper or a thick septum to prevent dilution of the standard by ambient air.

4. Immediately before injecting the sample, remove the needle from the stopper or septum, adjust the syringe down to the desired volume, and inject the sample into the heated injection port on the GC. Note the injection time on the strip chart and/or actuate the electronic integrator.
5. Determine the retention time for each peak by dividing the distance of the peak maximum from the injection point by the chart speed.
6. Repeat the analysis, and determine the retention times for each peak for the second analysis. The retention times of successive injections should agree within 0.5 seconds or within 1% of the mean of the adjusted retention times, whichever is greater.

3.4.3 *Analysis of Preliminary Survey Bag Samples* - Follow the procedures described in Subsection 5.3.1 for the analysis of bag samples. To assess the stability of the gas sample in Tedlar bags, perform a second analysis after a time period equalling the period between sample collection and the first analysis. If the concentration of the sample collected in a Tedlar bag decreases by more than 10% between the first and second analysis, then an accepted sampling method other than Tedlar bags should be considered.

Perform a retention check on the bag sample by successively evacuating the bag and refilling it with hydrocarbon-free air or nitrogen one or more times. Analyze the bag contents for the target compound(s), allow the gas to sit in the bag overnight, and reanalyze bag contents for the target compound(s). If any target compound is detected in the bag at a concentration greater than 5% of the original concentration, then an accepted sampling method other than Tedlar bags should be considered.

3.4.5 *Analysis of Preliminary Survey Adsorption Tube Samples* - Follow the procedures described in Subsection 5.3.4 for the analysis of adsorption tube samples. A minimum desorption efficiency of 50% must be obtained. If 50% desorption efficiency cannot be achieved using the referenced procedures from Table B in the Method Highlights Section, then try longer desorption times, more vigorous desorption techniques and/or other desorption solvents. If 50% desorption efficiency still cannot be accomplished, then an accepted sampling method other than adsorption tubes should be considered.

3.4.6 *Interpretation of Preliminary Survey Results* - To select the most suitable sampling and analytical method for the final field test, the results of the preliminary survey must be properly interpreted. The major points to consider are (1) the sampling location, (2) the parameters of the process being tested, (3) the flue gas moisture and temperature and the flue or duct static pressure, (4) stability of the gas sample in bags, (5) the desorption efficiency of the target compounds from adsorption tubes, and (6) the resolving capability, precision, accuracy, and speed of the GC analysis. Thus, flue gas or duct parameters and components present determine which sampling and analytical methodologies will be the most appropriate.

Sampling Location - The hazards associated with the sampling location will influence the type of sampling methodology which can be used. In explosion risk areas where use of pumps, heated probes, or a GC with a flame ionization detector (FID) would be prohibited, the explosion risk area sampling procedure can be used safely. Close attention must be paid to maintaining the proper sampling rate when

using the evacuated canister as a vacuum source. It may be possible at certain hazardous locations, to locate the collection device (bag or adsorption tube) in the explosion risk area near the source and operate the sampling pump a safe distance away. Also, intrinsically safe personnel sampling pumps could be used in certain hazardous areas provided the required sampling rate can be maintained. Hazardous sampling locations may not be suitable for direct or dilution interface sampling when using an electrically-heated probe and sample line.

Other physical factors concerning the sampling location will also influence which sampling method is most suitable. These factors will be site-specific and are beyond the scope of this Handbook.

Process Parameters - The particular process parameters pertaining to the generation of the organic emissions and the effect the operation has on the emission levels will influence which sampling technique will be most suitable. In the case of a continuous process where emission levels are constant, each of the Method 18 sampling techniques should be suitable with regard to the process parameters. For processes operating in a batch or cyclic mode, the bag or adsorption tube integrated sampling techniques may be more suitable compared to the interface techniques where grab samples are analyzed.

Flue Gas or Duct Conditions - The flue gas or duct moisture and temperature will have a major influence on selecting the most suitable sampling technique. High moisture will affect both bag samples and adsorption tube samples. For situations where moisture may be a problem, the interface techniques are recommended provided the 5% criteria for consecutive injections, described in Subsections 5.3.2 and 5.3.4, can be met. Condensation in bag samples may result in the target organic compounds being absorbed into the condensate, or, at extremely high concentrations, being the condensate itself. The heated bag sampling technique may be suitable provided on-site analysis is conducted when it is not practical to keep the bags heated until analysis at the base laboratory. Condensation may also be avoided by using a diluted bag sample collected by prefilling the bag with a known quantity of hydrocarbon-free air or nitrogen prior to sampling and accurately metering the gas sample into the bag during sampling.

Moisture reduces the adsorptive capacity of certain types of adsorbents (primarily charcoal). For sampling with adsorption tubes at sources with moisture above 3%, a silica gel tube may be inserted in front of the primary adsorption tube; otherwise, two or more adsorption tubes connected in series should be used. The first tube becomes a sacrificial tube and should be positioned vertically during sampling. A disadvantage of this approach is that the additional tubes will also require analysis. Alternatively, a moisture knock-out jar can be used in front of the adsorption tube. As varying amounts of the organic emissions will also condense (the amount of each organic removed from the gas stream will largely depend on the individual compound's volatility and solubility characteristics), the liquid collected must be retained for analysis. Accurate quantitation of various organics in the condensed liquid(s) may involve several steps and is generally problematic.

The flue gas temperature may also dictate which sampling technique can be used due to limitations of the sampling equipment.

Bag Sample Stability and Target Compound Retention - If on-site analysis of bag samples is not feasible and the samples are returned to the base laboratory for analysis, then the stability of the gas sample in the bag will be a factor and should be determined. While the stability of organics in bags has been demonstra-

ted in numerous laboratory evaluations, an actual source sample could contain other unknown components which may affect sample stability. If the preliminary survey sample analysis indicates that the gas sample is not stable, then one of the alternative sampling procedures should be used. The check should be conducted at an elevated temperature if the bag is to be heated during sampling.

The retention of the target compounds by the Tedlar bag should also be checked. This check will indicate any sample loss not determined by the stability check. If the retention of a target compound by the Tedlar bag is unacceptably high, then the bag sampling technique is not suitable for that target compound and one of the alternative sampling procedures should be used. Heating of the bag during sampling and analysis may reduce the retention.

Adsorption Tube Desorption Efficiency - The desorption efficiency determined for the adsorption tubes must be >50%. If >50% desorption efficiency cannot be achieved with the referenced procedure, then more vigorous desorption techniques and/or solvents should be evaluated. The desorption efficiency, as determined by the procedures described in Subsection 5.1.6, will not indicate if the gas sample matrix will affect the desorption of the target compounds. If acceptable desorption efficiency cannot be achieved, then one of the alternative sampling procedures should be used. Also, the adsorption efficiency must be greater than 90%. The breakthrough volume must not be exceeded.

Calibration Standards and GC Analysis - The availability of calibration standards may dictate which sampling technique can be used. The GC analysis may also dictate which sampling technique will be the most suitable. For accurate analysis, adequate resolution must be achieved between target compounds and between any interfering compounds and target compounds. During preliminary survey sample analysis, acceptable resolution may not be achievable on a gas sample but may be accomplished with the adsorption tube sample, or vice versa. Thus, the sampling technique which gives acceptable resolution during sample analysis must be selected. In some situations where analysis of more than one target compound is required, two or more analyses of the same sample under different GC conditions and/or with different columns may be necessary to achieve adequate resolution.

Acceptable accuracy, as demonstrated by audit sample analysis, must also be achieved for sample analysis by either gas or liquid injection. Again the sampling technique that gives acceptable accuracy during sample analysis must be selected. The sampling technique that gives acceptable precision, as demonstrated by consecutive replicate injections, must be selected. Minimizing the analysis time is particularly important for the interface techniques. As discussed above, the precision limits may be hard to achieve with the interface techniques with a long analysis time under variable or cyclic emission conditions.

3.5 Apparatus Check and Calibration

Figure 3.4 summarizes the pretest apparatus checks and calibration and can be used as a pretest operations checklist. Figure 3.5 can serve as an equipment packing list and status report form.

3.5.1 *Probe* - If a heated probe is required for the selected sampling procedure, then the probe's heating system should be checked to see that it is operating properly. The probe should be cleaned internally by brushing first with tap water, then with deionized distilled water, and finally with acetone. Allow the probe to air dry, then the probe should be heated and purged with air or nitrogen. The

Date _____ Calibrated by _____

Check Sampling Technique To Be Used

Direct Bag ____, Dilution Bag ____, Direct Interface ____, Dilution Interface ____, or Adsorption Tube ____.

Sampling Checks (Check only applicable methods)

Velocity and Water Vapor Content

Pitot tube dimension specifications checked?___yes ___no (specification of Method 2, Handbook Section 3.1)

Differential pressure gauge pretest calibration acceptable? ___yes ___no ___N/A (specifications of Method 2, Handbook Section 3.2)

Stack temperature sensor calibrated against a reference thermometer?* ___yes ___no (within 5°F of reference thermometer)

Barometer pretest field barometer reading correct? ___yes ___no (within 2.5 mm (0.1 in.) Hg of the mercury-in-glass barometer)

Wet bulb/dry bulb thermometers accuracy acceptable? ___yes ___no (within 1°F of true value, manufacturer's specifications)

Method 4 sampling equipment acceptable?* ___yes ___no (Handbook Section 3.3, PRE TEST SAMPLING CHECKS, Method 4, Figure 2.5)

Direct Bag

Pretest calibration of flowmeter acceptable? ___yes ___no (within 10 percent of 0.5 liter/min for single check)

For heated box system, pretest calibration of the temperature sensor in the box is acceptable? ___yes ___no ___N/A (within 5 percent of reference value at temperature of expected use)

Dilution Bag

Pretest calibration of flowmeter acceptable? ___yes ___no (within 3 percent of wet test meter)

Pretest calibration factor of dry gas meter acceptable? ___yes ___no (within 2 percent of wet test meter) _____

*Most significant items/parameters to be checked.

(Continued)

Figure 3.4. Pretest sampling checks.

Figure 3.4 (Continued)

Direct Interface and Dilution Interface

Pretest calibration of stack temperature sensor acceptable?* ___yes ___no (within 2°F of reference value)

Pretest calibration of probe and heated sample line temperature sensor acceptable?* ___yes ___no (within 2°F of reference value)

For dilution interface only, pretest calibration of dilution system acceptable?* ___yes ___no (within 10 percent of expected dilution factor)

Pretest calibration of gas chromatograph acceptable?*___yes ___no (specifications shown in POSTSAMPLING OPERATIONS CHECKLIST, Figure 5.10)

Adsorption Tubes

Pretest calibration of limiting orifice acceptable?*___yes ___no (compared to bubble meter)

*Most significant items/parameters to be checked.

Apparatus check	Acceptable		Quantity Required	Ready		Loaded and Packed	
	Yes	No		Yes	No	Yes	No
Moisture Determination							
*W Bulb/D Bulb*_____							
Checked							
Barometer							
*Calibrated**							
*Method 4*_____							
Probe, heated & leak checked							
Impingers							
*Meter system calibrated**							
Velocity Determination							
Pitot Tube							
*Number*_____							
*Length*_____							
Pressure Gauge							
*Manometer*_____							
*Other*_____							
Stack Thermometer							
*Calibrated*_____							
Bag Sampling							
Probe Liner							
*S steel*_____							
*Glass*_____							
*Teflon tube*_____							
*Length*_____							
Meter System							
*Flowmeter**_____							
*Pump*_____							
*Evacuated can*_____							
Charcoal tube							
Sample line							
Tedlar Bags							
Number							
Blank checked							
Heated Box							
Number							
Heat checked							

*Most significant items/parameters to be checked.

Figure 3.5. Pretest preparations.

Figure 3.5 (Continued)

Apparatus check	Acceptable		Quantity Required	Ready		Loaded and Packed	
	Yes	No		Yes	No	Yes	No
Bag Sampling (continued)							
Dilution							
Inert gas							
Meter							
Gas Chromatograph							
*On-site*_____							
(check below)							
*N/A*_____							
Direct or Dilution Interface							
Probe Liner							
*Glass*_____							
*S steel*_____							
*Teflon*_____							
Heated Line							
*Length*_____							
Heat checked							
Temperature Sensors							
Stack							
Probe							
*Calibrated**							
Sample Pump							
Dilution System							
*Dilution pumps*_____							
*Flowmeters*_____							
Dilution gas							
Heated box							
Dilution factor							
*checked**							
Gas Chromatograph							
(shown below)							
Adsorption Tube							
Probe							
*Heated*_____							
Checked							
*Nonheated*_____							
*Glass*_____							
*S steel*_____							
*Filter*_____							

*Most significant items/parameters to be checked.

Figure 3.5 (Continued)

Apparatus Check	Acceptable		Quantity Required	Ready		Loaded and Packed	
	Yes	No		Yes	No	Yes	No
Adsorption Tube (continued)							
Sample Line							
*Type*_____							
*Length*_____							
*Checked**							
Pump and Meters							
Pump							
*Orifice*_____							
*Calibrated**							
*Rotameter*_____							
*Calibrated**							
Timer							
Adsorption Tubes							
*Type*_____							
Gas Chromatograph							
Cylinder Standards							
*Analyte*_____							
*PPM*_____							
*PPM*_____							
Regulators							
*Bags*_____							
*Size*_____							
*Dilution system*____							
*Calibrated**							
*Diluent gas*_____							
Bag Standards							
*Analyte*_____							
Syringes							
Impinger/hot							
*plate assembly*_____							
Gas meter							
N_2 gas							
Regulator							
Bags							
*Size*_____							
Other Gases							
*Fuel*_____							
*Carrier*_____							
*Zero*_____							
Columns							
*Type*_____							

*Most significant items/parameters to be checked.

Figure 3.5 (Continued)

Apparatus Check	Acceptable		Quantity Required	Ready		Loaded and Packed	
	Yes	No		Yes	No	Yes	No
Gas Chromatograph Type_____ Temp/con oven_____							
Bulk Samples *Bottles* *Type*_____ *Size*_____							

*Most significant items/parameters to be checked.

probe should be sealed at the inlet end and checked for leaks by applying a vacuum of 10 in. H_2O. See Subsection 1.0 for the probe leak check procedure. The probe is considered leakfree under these conditions if no loss of vacuum is seen after one minute. Any leaks should be corrected or the probe should be rejected. If the probe has an external sheath, the integrity of the seal between the sheath and the probe liner should be checked to ensure ambient air does not dilute the gas sample.

3.5.2 *Teflon Tubing* - Prepare enough sections of tubing for connecting the probe to bag or tube samples.

3.5.3 *Quick Connects or Equivalent* - The quick connects, or their equivalents, should be new or cleaned according to the manufacturer's recommendations. Leak check the quick connects as described in Subsection 1.0.

3.5.4 *Barometer* - The field barometer should be compared with the mercury-in-glass barometer or with a National Weather Service Station reading prior to each field test.

3.5.5 *Wet Bulb/Dry Bulb Thermometers* - For sources with stack temperatures below 59°C where wet bulb/dry bulb thermometers will be used to determine stack gas moisture content, the thermometers should be compared with the mercury-in-glass thermometer at room temperature prior to each field trip.

3.5.6 *Method 4 Equipment* - Where Method 4 will be used to determine stack gas moisture content, prepare the equipment for sampling following the procedures described in Section 3.3.3 of this Handbook.

3.5.7 *S-type Pitot Tube and Differential Pressure Gauge* - Prepare the S-type pitot tube and the differential pressure gauge for sampling following the procedures described in Section 3.1.3 of this Handbook.

3.5.8 *Sampling Pump* - Check the sampling pump for delivery rate and leaks before going to the field as follows: Attach a 0 to 5 liter/minute rotameter to the outlet of the pump and turn on the pump. Check the flow rate indicated by the rotameter. Reject or repair the pump if the flow rate is not at least 1 liter/minute. If the flow is adequate, then conduct a leak check by plugging the inlet of the pump. If the pump is leak free then the rotameter should eventually indicate no flow. Repair or replace the pump if a leak is indicated.

3.5.9 *Tedlar Bags* - Prepare new Tedlar bags for sampling by leak checking the bags before going to the field. The bags should also be checked for contamination by filling with hydrocarbon-free air or nitrogen during the leak check. The bags are checked as follows: Connect a water manometer, or equivalent, using a tee connector between the check valve quick connect on the bag and a pressure source (or hydrocarbon-free air or nitrogen for conducting the contamination check). Pressurize the bag to 5 to 10 cm (2 to 4 in.) H_2O and disconnect the quick connect. Loss of pressure over a 10 minute period indicates a leak. Alternatively, leave the bag pressurized overnight; a deflated bag the following day is indicative of a leak. Reject or repair any bags with leaks. After the hydrocarbon-free air or nitrogen has remained in the bag for 24 hours, analyze the bag contents using a GC with a flame ionization detector on the most sensitive setting. The bag should be rejected if any organic compounds are detected that may interfere with the analysis of any of the target compound(s).

3.5.10 *Rigid Leak-Proof Containers* - The rigid containers used to contain the Tedlar bags during sampling should be checked for leaks prior to going to the field. The container should be leak checked with the bag in place as follows: Connect a water manometer, or equivalent, using a tee connector between a pressure source and the container outlet. Pressurize the container to 5 to 10 cm (2 to 4 in.) Hg. Any loss of pressure after 10 minutes indicates a leak. Reject or repair the rigid container if a leak is indicated.

3.5.11 *Direct Pump Sampling System* - If the direct pump sampling system is selected, then the system should be assembled and leak checked prior to going to the field as follows: Assemble the system (see Figure 4.5). Attach a vacuum line and a rotameter to the inlet quick connect. Plug the probe inlet and turn on the vacuum pump. If the system is leakfree up to the pump, the rotameter should eventually indicate no flow. An alternate procedure to leak check the system up to the male inlet check valve quick connect is as follows: Connect a water manometer, or equivalent, using a tee connector between a pressure source and the inlet end of the probe. Pressurize the system to 5 to 10 cm (2 to 4 in.) Hg. Any loss of pressure after 30 seconds indicates a leak. Reject or repair the sampling system if a leak is indicated. Check to see if the pump is contaminating the sampling system by filling a second contamination-free Tedlar bag with hydrocarbon-free air or nitrogen, and with the system assembled pull the hydrocarbon-free air or nitrogen from the second Tedlar bag into the first Tedlar bag using the pump. Analyze the first bag contents using a GC with a flame ionization detector on the most sensitive setting. The pump should be rejected or repaired, cleaned, and checked again if any organic compounds are detected that may interfere with the analysis of any of the target compound(s).

3.5.12 *Needle Valve and Rotameter* - Prior to each field trip or at sign of erratic behavior, the flow control valve and the rotameter should be cleaned according to the maintenance procedure recommended by the manufacturer.

3.5.13 *Teflon Probe* - For bag sampling in an explosion risk area, prepare a new Teflon probe or clean a used Teflon probe following the procedure described in Subsection 3.5.1. Leak check the Teflon probe as follows: Attach a mercury manometer, with a tee connector, and a vacuum pump to the outlet of the probe. Plug the inlet end of the probe and apply a vacuum of 10 in. H_2O. The probe is considered leak free under these conditions if no loss of vacuum is seen after one minute. Any leaks should be corrected or the probe should be rejected.

3.5.14 *Explosion Risk Area Sampling System* - The explosion risk area sampling system should be leak checked as follows: Evacuate the steel drum. Assemble the system (see Figure 4.6), with the pinch clamp open, the sample bag leak checked and evacuated, and directional needle valve closed. Attach a mercury manometer to the inlet of the Teflon probe. Open the needle valve. The rotameter should eventually indicate no flow. Once there is no flow, note the manometer reading. The system is considered leak free under these conditions if no loss of vacuum is seen after one minute. Any leaks should be corrected or the system should be rejected. It is recommended that an explosion-proof pump be used in the explosion risk area or a regular pump be used outside the risk area. Follow the procedures described for these pumps.

3.5.15 *Heated Bag Sample Container and Sample Lines* - If other modified bag sampling techniques are selected due to condensation observed during sampling, heated

bag sample containers and sample lines will be required. The heating systems of this equipment should be checked prior to going to the field to see that they are operating properly. The sample lines should be cleaned following the procedure described for the sampling probe in Subsection 3.5.1. The heated sampling system should be assembled and leak checked prior to going to the field as follows: Assemble the system (see Figure 4.5). Attach a vacuum pump and a rotameter to the inlet quick connect. Plug the probe inlet and turn on the vacuum pump. If the system is leak free, the rotameter should eventually indicate no flow. An alternate procedure to leak check the system up to the female outlet check valve quick connect on the bag container is as follows: Connect a water manometer, or equivalent, using a tee connector between a pressure source and the inlet end of the probe. Pressurize the system to 5 to 10 cm (2 to 4 in.) Hg. Any loss of pressure after 30 seconds indicates a leak. Reject or repair the sampling system if a leak is indicated.

3.5.16 *Direct Interface Sampling System* - The heating system of the sampling probe should be checked prior to going to the field if heating is required to maintain the gas sample above the duct temperature and/or to prevent condensation. The probe should also be cleaned and leak checked following the procedures described in Subsection 3.5.1. If the probe has an external sheath, the integrity of the seal between the sheath and the probe liner should be checked to ensure ambient air does not dilute the gas sample. The sample line should be cleaned following the procedure described for the sampling probe in Subsection 3.5.1. The heating system of the sample line should be checked before going to the field to see that it is operating properly. The direct interface sampling system should be assembled and leak checked prior to going to the field as follows: Assemble the system (see Figure 4.5). Switch the gas sampling valve to the inject position, and plug the outlet from the sample valve. Connect a water manometer, or equivalent, using a tee connector between a pressure source and the inlet end of the probe. Pressurize the system to 5 to 10 cm (2 to 4 in.) Hg. Any loss of pressure after 30 seconds indicates a leak. Reject or repair the sampling system if a leak is indicated.

3.5.17 *Dilution Interface Sampling System* - The equipment required for dilution interface sampling is the same as required for direct interface sampling, with the addition of a heated dilution system and a larger heated sample pump. The heating systems should be checked to see that they are operating properly. Prior to each field trip or at sign of erratic behavior, all flowmeters should be cleaned according to the maintenance procedure recommended by the manufacturer. The flowmeters should also be calibrated following the procedures described in Subsection 2.1.3. The dilution interface sampling system should also be checked for leaks as follows: Assemble the system (see Figure 4.6). Connect a water manometer, or equivalent, using a tee connector between a pressure source and the inlet end of the probe. Plug the three outlet vents to the charcoal adsorbers and the outlet of the two flowmeters. Pressurize the system to 5 to 10 cm (2 to 4 in.) Hg. Any loss of pressure after 30 seconds indicates a leak. Reject or repair the system if a leak is indicated. It is advisable to verify the operation of the dilution system prior to going to the field following the procedures described in Subsections 4.3.7 and 5.3.3.

3.5.18 *Gas Chromatography System* - Refer to Table C in the Method Highlights Section to ensure that the proper detector has been selected for the target organic compounds. Prior to taking the gas chromatography system to the field, check that all systems are operating properly. Consult the operator's manual for procedures

to verify that the equipment is operating properly. Check to see that all cylinder gas regulators, connections, and tubing are functioning properly and are leak free. This is particularly important when using hydrogen and oxygen. Consult with the regulator manufacturer for procedures on checking pressure regulators. Connections and tubing can be checked for leaks by pressurizing with the gas and wetting with a soap solution or other commercially available solutions. Any bubbles forming on the connections indicate a leak. Tighten or replace any leaking connections. An alternative leak check procedure for carrier gas is as follows: Plug the outlet of the analytical column. Pressurize the tubing and connections. Turn off the cylinder valve and note pressure on the regulator gauge and, if equipped, the GC pressure gauge. Any loss of pressure indicates a leak. Locate the leak using a soap solution or work backwards through the carrier gas flow path disconnecting each component and plugging the carrier gas flow until the leak is located. a similar check should be made of the gas sampling valve, sample loop, and connections.

It is advisable to take to the field an adequate supply of spare parts, septums, different size sample loops, extra analytical columns, and other related equipment that may fail or deteriorate during the emission test. The generation of response factors for each target organic compound, relative to a single organic compound, should be confirmed in the laboratory prior to going to the field. The confirmation procedure involving preparation and analysis of calibration standards containing multiple organic compounds is described in Section 5.1.6.

3.6 Reagents and Equipment

The following reagents and equipment may be required to conduct the emission test depending on the sampling method selected. These materials are generally acquired from commercial vendors. Certification of purity and/or analysis should be obtained for adsorption tubes, calibration and zero gases, and liquid organic compounds.

3.6.1 *Charcoal Adsorber* - Check to see that the supply of charcoal adsorbent is sufficient to last for the entire field test period.

3.6.2 *Adsorption Tubes* - If adsorption tube sampling is to be conducted, check to see that the proper type of tube has been obtained for collecting the target organic compounds. Refer to Table B in the Methods Highlights Section to determine the proper adsorption material. Check to see that the supply of adsorption tubes is sufficient to conduct the emission test, including field blanks and for desorption efficiency determinations.

3.6.4 *GC Carrier Gas* - Check the GC operator's manual and the GC column manufacturer to see that the GC carrier gas type and grade are compatible with the GC and the column. Check to see that the supply of carrier gas is sufficient to last the entire field test period.

3.6.4 *Auxiliary GC Gases* - Check to see if the proper type and grade of auxiliary gases required by the GC detector have been obtained. Consult with the GC detector manufacturer to determine the proper type and grade of auxiliary gases required. Check to see that the supply of auxiliary gases is sufficient to last the entire field test period.

3.6.5 *Calibration Gases* - Check to see if the correct calibration gases in the required range have been obtained. If available, commercial cylinder gases may be

used if their concentrations have been certified by direct analysis; cylinder gases with tighter tolerances on their concentrations are preferred. Check to see that the supply of calibration gases is sufficient to last the entire field test period.

3.6.6 *Calibration Gas Dilution System* - Prior to each field trip or at the sign of erratic behavior, any flow control valves or rotameters used in the dilution system should be cleaned according to the maintenance procedure recommended by the manufacturer. The rotameters or other metering devices used with a single-stage or two-stage dilution system should be calibrated prior to going to the field following the procedures described in Subsection 2.2. It is advisable to check the dilution ratio of the dilution system prior to going to the field following the procedures described in Subsections 4.3.7 and 5.3.3.

3.6.7 *Zero Gas* - Check to see that the zero gas meets the requirements for being hydrocarbon-free (less than 0.1 ppm_v of organic material as propane or carbon equivalent). Check to see that the supply of zero gas is sufficient to last the entire field test period.

3.6.8 *Audit Gases* - Check to see that the required audit gases in the proper range have been acquired. Consult Table A in the Method Highlights Section for audit gases available from the EPA for the target organic compounds. The availability and ranges of audit gases can be determined by contacting:

Environmental Protection Agency
Environmental Monitoring Systems Laboratory
Quality Assurance Division (MD-77B)
Research Triangle Park, North Carolina 27711
Attention: Audit Cylinder Gas Coordinator

For audit gases obtained from a commercial gas manufacturer, check that the manufacturer has (1) certified the gas in a manner similar to the procedure described in 40 CFR Part 61, Appendix B, Method 106, Section 5.2.3.1 and (2) obtained an independent analysis of the audit cylinder that verifies that the audit gas concentration is within 5% of the manufacturer's stated concentration.

3.6.9 *Organic Compounds for Preparing Gaseous Standards* - If gaseous standards are to be prepared in the field, check to see if the organic compounds to be used are at least 99.9% pure or, if less than 99.9%, of known purity necessary to calculate the gaseous standard concentration. Record the manufacturer's lot number for each standard compound.

3.6.10 *Equipment for Preparing Gaseous Standards by Liquid or Gas Injection*- Confirm that the Tedlar bags to contain the gaseous standards have been leak checked following the procedures described in Subsection 3.5.9. Check to see that the syringes selected are gas-tight, cover the range needed (1.0- to 10-microliters for liquids and 0.5 ml for gases), and are accurate to within 1%. Confirm that the dry gas meter and temperature gauge have been calibrated following the procedures described in Subsection 2.0. Clean the midget impinger assembly with detergent and tap water, and then rinse with deionized distilled water. Check the system for leaks as follows: Assemble the appropriate system for preparing standards (see Figure 5.5 for gaseous materials or Figure 5.6 for liquid materials). Fit the injection port with a new septum. Fill the Tedlar bag and pressurize the system to 5 to 10 cm (2 to 4 in.) Hg. Any loss of pressure after 10 minutes indicates a

leak. Reject or repair the system if a leak is indicated.

3.7 Packing Equipment for Shipment

The packing techniques described in this section are not requirements, but are suggestions based on previous field experience. The type of packaging for equipment going to the field depends on the mode of transportation. Typically, packing equipment for transport by a common carrier will require the greatest degree of effort to ensure the equipment arrives on-site in its original condition. When possible, delicate equipment should be packed in the original shipping containers. For convenience, label all containers with the contents for easy identification in the field. The most common mode of packing will be in a van or trailer, where the equipment will remain during transport. More sophisticated test firms have trailers or trucks dedicated to the type of sampling being conducted. These units are often designed to allow the test equipment and instruments to remain set up during transport. This approach minimizes the time and effort required to set up before and breakdown after a test. A dedicated test vehicle provides a working environment that greatly enhances the quality of work that can be performed.

3.7.1 *Probe* - Pack the probe in a rigid case protected by polyurethane foam, polyethylene bubble-pack, or other suitable packing material. Seal the inlet and outlet of the probe with tape or other suitable material. Protect any protruding glass ends from breakage by insertion into rigid plastic pipe lined with foam or other packing material.

3.7.2 *Teflon Tubing, Sample Lines, and Vacuum Lines* - All tubing, sample lines, and vacuum lines should be coiled and secured with tape. Coils should be large enough not to crimp tubing or excessively strain the heat sheath. Seal all openings with tape.

3.7.3 *Quick Connects, Flow Control Valves and other Connectors* - All connectors, valves, and other small parts should be packed in small parts cabinets, trays with divided compartments, or storage chests with labeled drawers to provide quick and easy access to the desired part.

3.7.4 *Barometer* - The field barometer should be packed in a rigid container, securely mounted in rigid foam. The barometer case should be packed in a larger box designated to contain delicate or fragile equipment.

3.7.5 *Thermometers and Thermocouple Readouts* - Thermometers and thermocouple readouts should be packed in the original carrying case, if possible. Glass thermometers should be packed in a rigid tube to prevent breakage. These items, in their smaller packing, should also be packed in a larger box designated to contain delicate or fragile equipment.

3.7.6 *Method 4 Equipment* - Method 4 equipment should be packed following the procedures recommended in Section 3.3.3 of this Handbook.

3.7.7 *S-type Pitot Tube and Differential Pressure Gauge* - The S-type pitot tube, when not mounted on the sampling probe, should packed in a rigid case and wrapped with polyurethane foam, polyethylene bubble-pack, or other suitable type of packing material. Seal all openings with tape or other suitable material. The differential pressure gauge, if not part of a meter box, should be mounted in a rigid

housing. The gauge should be wrapped with polyurethane foam, polyethylene bubble-pack, or other suitable material, and packed in a larger box designated for delicate and fragile equipment.

3.7.8 *Glassware* - All glassware should be packed in the original shipping containers, if available, and stored together in a larger rigid container marked "Fragile! Glass." Otherwise, wrap the glassware with polyurethane foam, polyethylene bubble-pack, or other suitable material, and pack in a rigid foam-lined container marked "Fragile! Glass."

3.7.9 *Tedlar Bags* - Preferably, transport the Tedlar bags to the field in individual rigid containers used for sampling. If this is not possible, pack the bags, individually, in corrugated cardboard boxes with the connectors secured such that they do not contact and puncture the bags.

3.7.10 *Sampling Pumps* - Sampling pumps, if not mounted in a rigid housing suitable for transport, should be packed in a rigid foam-lined container.

3.7.11 *Dilution Interface System* - The dilution interface system should be built into in a rigid container suitable for shipment.

3.7.12 *Gas Chromatograph System* - The gas chromatograph and ancillary systems should be packed in the original shipping container for transport. Although it is not recommended, the GC can be transported with out additional packaging in a van or trailer provided the GC is secured properly against movement and other equipment is not packed in a manner where it could fall on the instrument. For transport in dedicated test vehicles, the instruments should be mounted in shock absorbing devices. All gas lines and analytical columns should be capped to prevent contamination and/or oxidation during shipment.

3.7.13 *Gas Cylinders* - All gas cylinders should be transported with their protective cylinder heads securely attached. The cylinders should be secured horizontally so that they do not roll together or vertically in a specially designed cylinder rack. Be aware of and adhere to all Federal, State, and local regulations involving the transport of compressed and flammable gases, particularly through tunnels.

3.7.14 *Liquid Organic Compounds* - Liquid organic compounds should be shipped with the container top sealed with electricians tape and stored in a sealed plastic bag. Packed each container in its original shipping box, if available. Otherwise, wrap each container individually with polyurethane foam, polyethylene bubble-pack, or other suitable material and place in a box designated for chemicals.

3.7.15 *Dry Gas Meters* - Dry gas meters not housed in a rigid meter box suitable for transport should be wrapped with polyurethane foam, polyethylene bubble-pack, or other suitable material, and packed in a larger box designated for delicate or fragile equipment.

Table 3.1. ACTIVITY MATRIX FOR PRELIMINARY SURVEY SAMPLING AND ANALYSIS

Characteristic	Acceptance limits	Frequency and method of measurement	Action if requirements are not met
Apparatus Check			
Barometer	Within 2.5 mm (0.1 in.) Hg of mercury-in-glass barometer	Before each field trip	Repair or replace
Wet bulb/dry bulb thermometers	Within 1°C (2°F) of a mercury-in-glass thermometer	As above	Replace
Method 4 equipment	See Section 3.3.3 of this Handbook	Same as Section 3.3.3	Same as Section 3.3.3
S-type pitot tube and differential pressure	See Section 3.1.3 of this Handbook	Same as Section 3.1.3	Same as Section 3.1.3
Probe	1. Clean; glass liner, stainless steel, or Teflon inert to organics	Before each field trip following the procedures described in Subsection 3.5.1	Repeat cleaning
	2. Heating properly if equipped with heating system	As above	Repair or replace
	3. Leak free	As above	As above
Teflon tubing	New and unused	As above	Obtain new tubing
Quick connects	New or clean	As above	Clean according to manufacturer's recommendation
Glass flasks	Clean	As above	Repeat cleaning of flasks
High-vacuum pump	Vacuum of 75 mm (3 in.) Hg absolute	As above	Repair or replace
Tedlar or aluminized Mylar bags	Leak free; no loss of pressure after 30 seconds	Prior to each test pressurize to 5 to 10 cm (2 to 4 in.) H_2O	As above

(Continued)

Table 3.1 (Continued)

Characteristic	Acceptance limits	Frequency and method of measurement	Action if requirements are not met
Apparatus Check			
Rigid containers	Leak free; no loss of pressure after 30 seconds	Prior to each test pressurize to 5 to 10 cm (2 to 4 in.) H_2O	Repair or replace
Direct pump sampling system	Leak free; no loss of pressure after 30 seconds	As above	As above
Needle valve and rotameter	Clean	Prior to each trip or at the sign of erratic behavior	Clean following manufacturer's recommendations
Adsorption Tube Procedure			
Adsorption tubes	Proper type of adsorption material	Before each field trip	Replace with proper type
Personnel sampling pump	Calibrated	As above	Repair or replace
Extraction solvent	Proper type of extraction solvent	Prior to extraction of tubes for analysis	Replace with proper type
Teflon tubing	New and unused	Before each field trip	Obtain new tubing
On-site Measurements and Sampling			
Wet bulb/dry bulb measurement	1. Wet bulb wick moistened	Prior to each measurement	Moisten
	2. Wet bulb temperature stabilized	During measurement	Allow to stabilize
	3. Record wet bulb and dry bulb temperature	Immediately after wet bulb temperature stabilizes	Repeat measurement

(Continued)

Table 3.1 (Continued)

Characteristic	Acceptance limits	Frequency and method of measurement	Action if requirements are not met
On-site Measurements and Sampling			
Evacuated glass flask sampling	1. Flask evacuated to pump capacity	Prior to sample collection	Evacuate flask
	2. Assemble; no leakage	Before sample collection, visually and physically inspect all connections	Check for leaks; repair system; repeat test
	3. System purged up to flask inlet	Immediately prior to sampling	Purge system up to flask inlet
	4. Stopcocks closed and taped; flask labeled	Immediately after sampling	Close and tape stopcock; label flask
	5. Flue gas temperature and static pressure determined	Immediately after sampling	Determine flue gas temperature and static pressure
Purged glass flask sampling	1. Assemble; no leakage	Before sample collection, visually and physically inspect all connections	Check for leaks; repair system; repeat test
	3. Entire system purged for 2 minutes	Immediately prior to sampling	Purge entire system for 2 minutes
	3. Stopcocks closed and taped; flask labeled	Immediately after sampling	Close and tape stopcock; label flask
	4. Flue gas temperature and static pressure determined	Immediately after sampling	Determine flue gas temperature and static pressure

(Continued)

Table 3.1 (Continued)

Characteristic	Acceptance limits	Frequency and method of measurement	Action if requirements are not met
On-site Measurements and Sampling			
Flexible bag sampling procedure	1. Assemble using Figure 4.4; no leakage	Before sample collection, visually and physically inspect all connections	Check for leaks; repair system; repeat test
	2. Flow rate set to 0.5 lpm; purge system up to bag inlet	Immediately prior to sampling	Set flow rate Purge system up to flask inlet
	3. Flue gas temperature and static pressure determined	Immediately after sampling	Determine flue gas temperature and static pressure
	4. Bag labeled and protected from sunlight	Immediately after sampling	Label bag and protect from sunlight
Adsorption tube sampling procedure	1. Assemble using Figure 4.9; no leakage	Before sample collection, visually and physically inspect all connections	Check for leaks; repair system; repeat test
	2. Tubes capped, labeled and stored	Immediately after to sampling	Cap, label and store tubes
	3. Flue gas temperature and static pressure determined	Immediately after sampling	Determine flue gas temperature and static press.
Preliminary Survey Sample Analysis			
Calibration standards	1. Minimum of three standards prepared for each analyte	Prior to sample analysis	Prepare three standards for each analyte
	2. Sufficient peak resolution achieved (valley height <25% of the sum of the 2 peak heights)	During multiple component standard analysis	Vary GC operating conditions and/or change column type

(Continued)

Table 3.1 (Continued)

Characteristic	Acceptance limits	Frequency and method of measurement	Action if requirements are not met
Preliminary Survey Sample Analysis			
Calibration standards	3. Response for consecutive replicate injections of each standard agree within 5% of their average response	During calibration standard analysis	Repeat injections
	4. Calibration curve generated	After calibration standard analysis	Perform regression analysis and plot curve
	5. Audit sample (optional) analysis results within 10% of true value	As above	Repeat audit; remake and reanalyze standards
Glass flask sample analysis	1. Condensation in sample flask	Before sample analysis	Heat flask to flue gas or duct temperature
	2. Flask not pressurized	As above	Pressurize flask
	3. Condensation in pressurized flask after 10 minute equilibration	As above	Heat flask to vaporize condensate; if flask already heated, release pressure and repressurize
	4. Adequate resolution between peaks achieved for peaks >5% of total area	During sample analysis	Vary GC operating conditions and/or change column type
	5. Retention times of consecutive injections determined and agree within 0.5 seconds or 1%	After sample analysis	Repeat analysis

(Continued)

Table 3.1 (Continued)

Characteristic	Acceptance limits	Frequency and method of measurement	Action if requirements are not met
Preliminary Survey Sample Analysis			
Flexible bag samples	1. Response for consecutive replicate injections of each sample agree within 5% of their average response	During sample analysis	Repeat analysis; diagnose GC problem
	2. Stability of bag samples acceptable (second analysis conducted an equal number of days corresponding to the the time elapsed between sample collection and first analysis within 10%)	After second analysis	Consider one of the alternate sampling methods
Adsorption tube samples	1. Samples desorbed for period specified in referenced method	Before sample analysis	Check referenced method; desorb for specified period
	2. Response for consecutive replicate injections of each sample agree within 5% of their average response	During sample analysis	Repeat analysis; diagnose GC problem
	3. Desorption efficiency >50%	After sample analysis	Evaluate more vigorous desorption techniques; Consider one of the alternative sampling methods

Table 3.2. ACTIVITY MATRIX FOR PRESAMPLING PREPARATION

Characteristic	Acceptance limits	Frequency and method of measurement	Action if requirements are not met
Apparatus Check Barometer	Within 2.5 mm (0.1 in.) Hg of mercury-in-glass barometer	Before each field trip	Repair or replace
Wet bulb/dry bulb thermometers	Within 1°C (2°F) of a mercury-in-glass thermometer	As above	Replace
Method 4 equipment	See Section 3.3.3 of this Handbook	Same as Section 3.3.3	Same as Section 3.3.3
S-type pitot tube and differential pressure	See Section 3.1.3 of this Handbook	Same as Section 3.1.3	Same as Section 3.1.3
Probe	1. Clean; glass liner, stainless steel, or Teflon inert to organics	Prior to each trip follow the cleaning procedure described in Subsection 3.5.1	Repeat cleaning
	2. Heating properly if equipped with heating system	Prior to each trip	Repair or replace
	3. Leak free	As above	As above
Teflon tubing	New and unused	As above	Obtain new tubing
Quick connects	New or clean	As above	Clean according to manufacturer's recommendation
Sampling pump	Leak free; adequate delivery ($\geq$ 1 Lpm)	Prior to each trip check with a rotameter	Repair or replace
Tedlar bags	Leak free; no loss of pressure after 10 minutes	Prior to each test pressurize to 5 to 10 cm (2 to 4 in.) H_2O	As above
Rigid containers	Leak free; no loss of pressure after 30 seconds	Prior to each test pressurize to 5 to 10 cm (2 to 4 in.) H_2O	As above

(Continued)

Table 3.2 (Continued)

Characteristic	Acceptance limits	Frequency and method of measurement	Action if requirements are not met
Apparatus Check			
Direct pump sampling system	Leakfree; no loss of pressure after 30 seconds	Prior to each test pressurize to 5 to 10 cm (2 to 4 in.) H_2O	As above
Needle valve and rotameter	Clean	Prior to each trip or at the sign of erratic behavior	Clean following manufacturer's recommendations
Explosion risk area sampling system	Leakfree (no vacuum loss after 1 minute)	Prior to each trip	Repair or replace
Heated bag sampling container	1. Leakfree; no loss of pressure after 30 seconds	Prior to each test pressurize to 5 to 10 cm (2 to 4 in.) H_2O	As above
	2. Heating properly	As above	As above
Direct interface sampling system	1. Heating properly	As above	As above
	2. Leakfree (no flow at rotameter with probe plugged)	As above	As above
Dilution interface sampling system	1. Heating properly	As above	As above
	2. Flowmeters calibrated	Calibrate prior to each test against a bubble meter or spirometer	Calibrate
	3. Leakfree; no loss of pressure after 30 seconds	Prior to each test pressurize to 5 to 10 cm (2 to 4 in.) H_2O	
Gas chromatograph equipment	Leakfree, operational, and sufficient spare parts for the duration of the field test	Prior to field test check system for leaks, access operational condition, and inventory spare parts	Consult the operator's manual

(Continued)

Table 3.2 (Continued)

Characteristic	Acceptance limits	Frequency and method of measurement	Action if requirements are not met
Reagents and Equipment			
Charcoal adsorber	Sufficient supply	Check supply prior to each field test	Procure more adsorbent
Adsorption tubes	Proper adsorbent, tube size, and quantity for test	Prior to field test refer to Method Highlights Section and preliminary survey results	Procure proper adsorbent, tube size, and quantity
Gas chromatograph carrier gas	Carrier gas compatible to GC and column; sufficient quantity for test	Prior to field test refer to operator's manual or consult with manufacturer	Procure compatible carrier gas in sufficient quantity
Auxiliary GC gases	Proper type and grade for GC detector; sufficient quantity for test	Prior to field test refer to operator's manual or consult with manufacturer	Procure proper type and grade of gases in sufficient quantity
Calibration gases	Proper component(s) and range; sufficient quantity for any on-site calibrations	Prior to field test refer to the preliminary survey results	Obtain gases with the proper components in the necessary range and quantity
Calibration gas dilution system	1. Rotameters clean and calibrated	Prior to field test examine and calibrate following procedures in Subsection 2.2	Clean and calibrate
	2. Dilution ratio known (optional)	Prior to field test establish the ratio following the procedures in Section 5.0	Check dilution ratio prior to analysis (required)
Zero gas	Hydrocarbon-free (<0.1 ppm_v as propane or carbon equivalent); sufficient supply for test	Analyze or consult manufacturer	Procure hydrocarbon-free gas in sufficient quantity for test

(Continued)

Table 3.2 (Continued)

Characteristic	Acceptance limits	Frequency and method of measurement	Action if requirements are not met
Audit gases	Required audit gases in proper range	Prior to field test contact EPA or vendor (see Subsection 3.6.8)	Acquire required audit gas(es)
Organic compounds for preparing gaseous standards	Target compound(s) 99.9% pure or of known purity	Prior to field test contact manufacturer or vendor	Procure 99.9% pure compound(s) or compound(s) of known purity
Equipment for preparing gaseous standards	See Subsection 3.6.10	See Subsection 3.6.10	See Subsection 3.6.10
Packing Equipment for Shipment			
Probe	Protect with suitable packing material	Prior to each shipment	Repack
Teflon tubing, sampling lines, and vacuum lines	Coiled and taped; openings taped	As above	Coil and tape
Quick connects, flow control valves, and other connectors	Stored organized in containers	As above	Repack
Barometer	Packed in rigid foam in a rigid container	As above	As above
Thermometers and thermocouple readouts	Packed in original container, if possible, or rigid container	As above	As above
Method 4 equipment	See Section 3.3.3 of this Handbook	As above	See Section 3.3.3 of this Handbook
S-type pitot tube and differential pressure gauge	See Section 3.1.3 of this Handbook	As above	See Section 3.1.3 of this Handbook

(Continued)

Table 3.2 (Continued)

Characteristic	Acceptance limits	Frequency and method of measurement	Action if requirements are not met
Packaging Equipment for Shipment			
Glassware	Packed in original shipping containers, if available, or suitable packing material and marked "Fragile"	Prior to each shipment	Repack
Tedlar bags	Packed in rigid sampling containers, if possible, or packed individually in corrugated boxes with connectors secured	As above	As above
Sampling pumps and dry gas meters	Mounted in a rigid housing or packed in rigid foam-lined containers	As above	As above
Dilution interface system	Built into a rigid container suitable for shipment	As above	Rebuild into rigid container or pack in suitable material
Gas chromatograph system	Packed in original shipping container, secured properly in van or trailer, or mounted in a designated test vehicle	As above	Repack
Gas cylinders	Protective heads on, secured in van or trailer; transported in compliance with Federal, state, and local regulations	As above	Repack; check Federal, state, and local regulations concerning transport of compressed gases
Liquid organic compounds	Top sealed and packed in original shipping container	As above	Tape and repack

4.0 ON-SITE MEASUREMENTS

On-site activities include transporting the equipment to the test site, unpacking and assembling the sampling and/or analytical equipment, then conducting the sampling and/or analysis for the predetermined organic compound(s). The quality assurance activities for the on-site measurements are summarized in Table 4.1 at the end of this section. Copies of all field data forms mentioned in this section are in Subsection 3.16.12. The on-site measurements checklist, Figure 4.10 at the end of this section, provides the tester with a quick method for checking requirements during sampling.

4.1 Transportation of Equipment to the Sampling Site

The most efficient means of transporting the equipment from ground level to the sampling site (often above ground level) should be decided during the preliminary survey or by prior correspondence. Care should be taken to prevent damage to the equipment or injury to test personnel during the moving. A clean "laboratory" type area free of excessive dust and organic compounds should be located and designated for preparing the sampling systems and conducting sample recovery and analysis, if applicable.

4.2 Preliminary Measurements and Setup

Method 18 strongly recommends that a preliminary survey and/or laboratory evaluation be conducted prior to sampling and analysis. Unless adequate prior knowledge of the source or information is available, the presurvey procedures described in Subsection 3.0 on presampling operations should be followed to select an acceptable sampling and analytical approach.

The accuracy of the sampling system(s) following handling and transportation to the sampling site is determined using a cylinder gas audit. The integrity of the system(s) is confirmed after setup by conducting the individual system check described below for the applicable sampling method. Preliminary measurements will always include determining the stack dimensions and the flue gas moisture. Other measurements which may be made depending upon the requirements of the applicable regulations and the source operations include a flow rate determination, velocity check, and stack gas temperature range measurement.

One of the primary concerns for any organic sampling program must be safety. The tester should always question the facility representative concerning general plant safety requirements and safety in regard to sampling at the selected sampling site. Every sampling and analysis protocol should address the safety considerations involved in performing the protocol. Because there are numerous safety considerations involved in organic sampling, it is beyond the scope of this Handbook to discuss each one in detail. However, it cannot be over-emphasized that the tester must always be aware of the safety hazards.

4.3 Sampling

The following subsections discuss the procedures for each Method 18 sampling technique. At this point, the tester has selected the proper sampling technique and checked the selected sampling system. If this has not been accomplished, the user should refer to Subsection 3.0 prior to conducting the field test.

Because of the complexity in sampling organic compounds from the variety of potential source types, only the more common problems are addressed for each sampling method. Recommended quality assurance/control checks and procedures are provided to assess the suitability of the sampling technique for the samples to be collected. Because of the relative compactness of the equipment and the low cost of many of the sampling techniques, the tester may be able to utilize two different sampling techniques at the same time with little additional effort. The samples from the backup or secondary technique are not analyzed if the primary technique proves satisfactory. For example, the tester might easily run an adsorption tube system as a backup to an evacuated bag system. At some facilities, it may be necessary to conduct two techniques simply to accurately measure all the organic compounds of interest. The tester should always be aware that a change in process operations such as raw materials, moisture content, operation mode, and temperature can render a previously acceptable sampling technique unacceptable.

The specific sampling system descriptions are provided below.

4.3.1 *Evacuated Container Sampling (Heated and Unheated)* - In this procedure, sample bags are filled by evacuating the rigid air-tight containers that hold them. The suitability of the bags for sampling should have been confirmed by permeation and retention checks using the specific organic compounds of interest during the presurvey operations. The means of transporting the bags to the laboratory for analysis within the specified time should also have been determined. Delays in shipping and/or analysis can result in significant changes in concentration for many compounds.

On-site sampling includes the following steps:

1. Conducting preliminary measurements and setup.
2. Preparation and setup of sampling system.
3. Preparation of the probe.
4. Connection of electrical service and leak check of sampling system.
5. Insertion of probe into duct and sealing of port.
6. Purging of sampling system.
7. Proportional sampling.
8. Recording data.
9. Recovering sample and transportion to laboratory.

Preliminary Measurements and Setup - The sampling site should be checked to ensure that adequate electrical service is available. The stack dimensions are measured and recorded on a data sheet similar to the ones shown in Figures 4.1, 4.2 and 4.3. The moisture content of the flue gas is used to correct the measured concentrations to a dry basis. It is typically measured prior to sampling using wet bulb/dry bulb thermometers or Method 4 (see Subsection 3.2); the determination should be performed at a time when process operations are like they will be during final sampling. If the process utilizes and emits ambient air, a sling psychrometer may be used to measure the moisture content of the ambient air in the area of process air uptake. The moisture content value is also used to confirm that the sampling approach selected is acceptable.

Prior to final sampling, the tester must determine if the final results are to be presented on a concentration basis or a mass emission basis. If they will be presented only on a concentration basis, only the concentrations of the specified organics and the stack gas moisture content must be measured. If the mass emission rate of any compound is to be presented, the flow rate of the stack gas using a velocity traverse must also be determined. In this case, although not required by Method 18, it is preferable that the sampling location be selected in accordance

Plant Rubber Chem Co.
City Plastic, NC
Operator Anna Carver
Date 2/26/88
Run number RC-1
Stack dia, mm (in.) 6 in.

Sample box number N/A
Pitot tube (C_p) 0.84
Static press 0 mm (in.) H_2O

Flowmeter calib. (Y) 0.996
Container type: bag X
syringe
canister -
Container volume, 30 liters
Container number R6-6
Average (ΔP) 0.5 ~~mm~~ (in.) H_2O
Initial flowmeter setting 1.02
Average stack temp 64 ~~°C~~ (°F)
Barometric press 767 mm ~~(in.)~~ Hg

Dilution system: (dynamic)
emission flowsetting N/A
diluent flowsetting N/A
Dilution system: (static)
emission flowsetting N/A
Final leak check 0 m^3/min (cfm)
Vacuum during leak check 10 mm (in.) H_2O
Sampling point location center of duct

Sampling time, min	Clock time, 24 h	Velocity head mm (in.) H_2O, (ΔP)	Flowmeter setting L/min (~~ft^3/min~~)	Temperature readings: stack ~~°C~~ (°F)	probe °C (°F)	sample line °C (°F)	flowmeter box °C (°F)	container °C (°F)
0	09:47	0.50	0.152	64	N/A	N/A	N/A	N/A
5		0.58	0.167	64				
10		0.52	0.155	64				
15		0.54	0.158	64				
20		0.56	0.160	64				
25		0.58	0.167	64				
30		0.58	0.167	64				
35		0.52	0.155	64				
40		0.50	0.152	64				
45		0.48	0.149	64				
50		0.46	0.146	64				
55		0.46	0.146	64				
60	10:47	0.46	0.146	64				
Total 60		Avg 0.52	Avg 0.155	Avg 64	Avg	Avg	Avg	Avg

Figure 4.1. Field sampling data form for container sampling.

Plant Rubber Chem Co.
City Plastic, NC
Operator Anne Carver
Date 1/26/88
Run number RC-1 → RC-12
Stack dia, mm (in.) 6 in.

Meter box number N/A
Stack temp 180 ~~°C~~ (°F)
Static press 0 mm (in.) H_2O

Barometric press 767 mm ~~(in.)~~ Hg
Initial probe setting ____ °C (°F)
Sampling rate 0.152 L/min (cfm)
Sampling point location
center of duct
Dilution system:
source flowrate 0.152 L/min (cfm)
diluent flowrate 1007 L/min (cfm)
diluent flowrate N/A L/min (cfm)
Dilution ratio 7.625

Sample loop volume 1.0 ml
Sample loop temp 210 ~~°C~~ (°F)
Column temperature:
initial Constant/ 100 °C/min
program rate N/A / °C/min
final — / 100 °C/min
Carrier gas flow 33 ml/min
Dilution system check OK 7.2%
Final leak check OK
Vacuum @ check 10 ~~mm~~ (in.) H_2O

Time of injection 24 h	Injection number	Flowmeter(s) settings source ml/min	diluent ml/min	diluent ml/min	Temperature readings stack ~~°C~~ (°F)	probe ~~°C~~ (°F)	sample line ~~°C~~ (°F)	injection port ~~°C~~ (°F)
1016	RC-1	152	1007	N/A	180	180	180	210
1026	RC-2	152	1007		178	180	180	210
1037	RC-3	152	1007		177	181	179	210
1047	RC-4	152	1007		179	180	182	211
1101	RC-5	152	1007		181	179	184	210
1116	RC-6	152	1007		179	182	184	212
1130	RC-7	152	1007		180	185	181	211
1141	RC-8	152	1007		179	184	183	210
1201	RC-9	152	1007		180	183	181	210
1216	RC-10	152	1007		180	183	181	211
1227	RC-11	152	1007		181	180	180	210
1240	RC-12	152	1007		182	183	184	210

Figure 4.2. Field sampling data form for direct interface sampling.

Plant Rubber Chem Co.
City Plastic, ND
Operator Anna Carver
Date 1/26/88
Run number RC-1
Stack dia, mm (in.) 6 in.
Meter box number DM-12
Pitot tube (C_p) 0.84
Static press 0 mm (in.) H_2O

Flowmeter calib. (Y) 1.12 l/min
Adsorption tube type:
charcoal tube X
silica gel
other
Adsorption tube number RC-1
Average (ΔP) 0.4 mm (in.) H_2O
Initial flowmeter setting 1.12
Average stack temp 70 °C (°F)
Barometric press 29.65 mm (in.) Hg

Dilution system: (dynamic)
emission flowsetting N/A
diluent flowsetting N/A
Dilution system: (static)
emission flowsetting N/A
Final leak check 0 m^3/min (cfm)
Vacuum during leak check 10 mm (in.) H_2O
Sampling point location center of duct

Sampling time, min	Clock time, 24 h	Velocity head ~~mm~~ (in.) H_2O, (ΔP)	Flowmeter setting L/min (~~ft^3/min~~)	Temperature readings: stack ~~°C~~ (°F)	probe, line ~~°C~~ (°F)	adsorp. tube ~~°C~~ (°F)	meter ~~°C~~ (°F)	Vacuum ~~mm~~ (in.) Hg
0	1222	0.4	1.12	68	68	48	48	19
5		0.4	1.12	68	68	48	48	19
10		0.4	1.12	69	69	49	49	19
15		0.4	1.12	69	69	49	49	19
20		0.4	1.12	70	70	50	50	19
25		0.4	1.12	70	70	50	50	19
30		0.4	1.12	71	71	50	50	19
35		0.4	1.12	72	72	50	50	19
40		0.4	1.12	72	72	51	50	19
45		0.4	1.12	72	72	51	50	19
50		0.4	1.12	72	72	51	51	19
55		0.4	1.12	73	73	51	51	19
60	1322	0.4	1.12	72	72	52	52	19
Total 60		Avg 0.4	Avg 1.12	Avg 71	Avg 71	Avg 50	Avg 50	Avg 19

Figure 4.3. Field sampling data form for adsorption tube sampling

with Method 1. If this is impractical, it should be selected to minimize flow disturbances. The number and locations of sampling points for the velocity traverse are selected according to Method 1 (see Section 3.0.1 of this Handbook); the traverse is conducted according to Method 2 (see Section 3.1 of this Handbook). Note: The Method 18 sampling will be conducted at a single point.

Method 18 requires that samples be collected proportionally, meaning that the sampling rate must be kept proportional to the stack gas velocity at the sampling point during the sampling period. If the process has a steady state flow (constant), then the flow rate does not have to be varied during sampling. The majority of sources of organic emissions are of this type because they use constant rate fans. If the tester can confirm from the facility that the source of interest has a steady state flow (e.g., it uses a constant rate fan), then sampling can be conducted at a constant rate and no concurrent velocity measurements need to be made. If it is not known whether the process is steady state or if it is not steady state, then velocity measurements (the velocity head) must be made at the point to be sampled. This can be done during the preliminary survey or before final sampling, but should be done when the process operations are like they will be during the final sampling. The average velocity head (pitot reading) and range of fluctuation is determined and then utilized to establish the proper flow rate settings during sampling. If it is found that the process is not steady state, then the velocity head must be monitored during sampling to maintain a constant proportion between the sample flow rate and the flow rate in the duct.

Select a total sampling time greater than or equal to the minimum total sampling time specified in the applicable emission standard. The number of minutes between readings while sampling should be an integer. It is desirable for the time between readings to be such that the flow rate does not change more than 20% during this period.

If it was determined from the literature or the preliminary survey laboratory work that the sampling system must be heated during sample collection and analysis, the average stack temperature is used as the reference temperature for the initial heating of the system and should be determined. Then, the stack temperature at the sampling point is measured and recorded during sampling to adjust the heating system just above the stack temperature or the dew point. In addition, the use of a heated sampling system typically requires that the analysis be conducted on-site since it is not practical to maintain the sample bag at elevated temperatures for long periods of time.

Sampling System Preparation - Prepare the probe and sampling train in the laboratory area (see Figure 4.4). First, place a loosely packed filter of glass wool in the end of the probe. Attach a sample bag that has been previously leak checked to the sample container lid. Seal the inlet to the probe and the sample container lid to the container body. Transport the container and probe to the sampling site.

Proportional Sampling - Sampling must be conducted at a rate in constant proportion to the stack gas flow at the sampling point. Thus, for a steady state operation, the sampling flow rate is not varied during the run. For a non-steady state process, the sampling flow rate is varied in proportion to the changing velocity. The velocity is monitored by measuring the velocity head (ΔP) which is linearly related to the square of the velocity. A recommended method for determining proportional sampling rates is as follows:

1. Conduct a single point velocity check as previously specified, and determine the average velocity head (ΔP_{avg}) to be sampled.

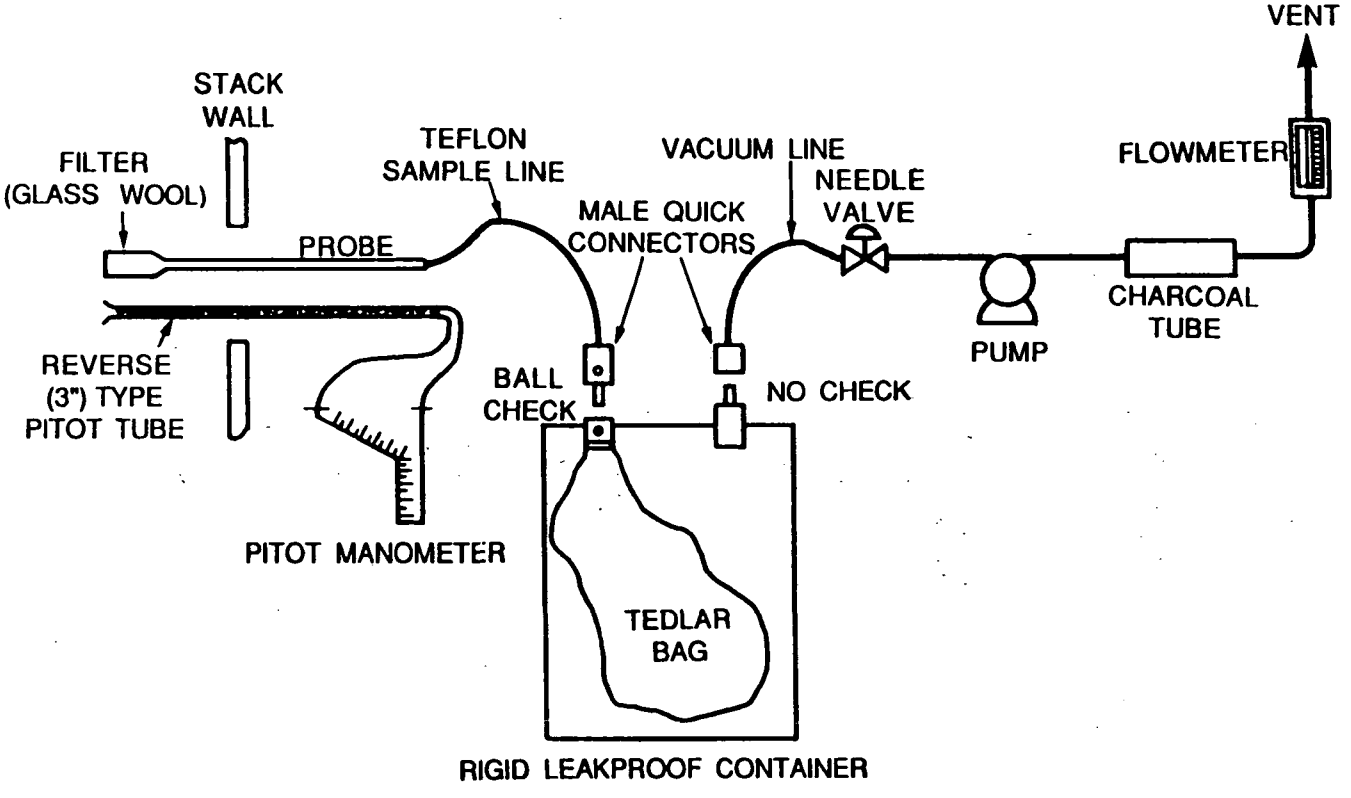

Figure 4.4. Integrated bag sampling system.

2. The average sampling flow rate for the test is determined prior to the start of the run. Typically, the average sampling flow rate is about 0.5 L/min which will yield approximately 30 liters of sample. The flow rate chosen in the laboratory should fill the bag to about three fourths of its capacity during the sample run. The average flow rate chosen is then assigned to the average velocity head measured.
3. The flow rate to be used during sampling when the velocity head varies from the average is calculated using the following equation.

$$Q_s = Q_m \left(\frac{\Delta P}{\Delta P_{avg}}\right)^{1/2} \qquad \text{Equation 4-1}$$

where

Q_m = Average sampling rate, L/min (ft^3/min),
Q_s = Calculated sampling rate, L/min (ft^3/min),
ΔP = Actual velocity head, mm (in.) H_2O, and
ΔP_{avg} = Average velocity head, mm (in.) H_2O.

4. Determine the rotameter setting for the sampling rate (Q_s) from the rotameter calibration curve, and adjust the rotameter accordingly.

Using this procedure will provide for the correct sampling rate and the proper filling of the sample bag. Follow the procedure below to obtain an integrated sample.

1. If a heating system is required, turn on the heating system and set at average stack temperature determined from the pretest measurements.
2. Leak check the sampling train just prior to sampling by connecting a U-tube, inclined manometer, or equivalent at the probe inlet and pulling a vacuum of $\geq$ 10 in. H_2O. Close the needle valve and then turn the pump off. The vacuum should remain stable for at least 30 seconds. If a leak is found, repair before proceeding; if not, slowly release the vacuum gauge. This leak check is optional.
3. If the system is being heated, wait for it to come to the proper temperature. Place the probe in the stack at the sampling point: centroid of the stack or no closer to the walls than 1 meter. Seal the sampling port to prevent dilution of the stack gas by inleakage of ambient air.
4. Disconnect the flexible bag. Purge the system by turning on the pump and drawing at least 5 times the sampling system volume through the train, or purge for 10 minutes, whichever is greater.
5. Adjust the flow rate to the proper setting based on the velocity pressure (during the purging, for non-steady state processes).
6. Connect the flexible bag to the sampling train (the connections should ensure a leakfree system), and begin sampling. The rate must remain proportional to the stack gas velocity for the total sampling time specified by the standard of performance for the industry being sampled.
7. Record all data required (5 minute intervals, miniumum) on the field sampling data form (see Figure 4.1). The flow rate and sample train heating system should be adjusted after every pitot and temperature reading to the correct level.
8. Disconnect and seal the flexible bag upon completion of sampling. Take care not to dilute the contents with ambient air.
9. Label each bag clearly and uniquely to identify it with its corresponding data form and/or run. If the system is a heated system, the sample bag must

be maintained at the stack temperature through sample analysis.

Sample Recovery and Transport to Laboratory - Sample recovery should be performed so as to prevent contamination of the bag sample and maintain sample integrity. The bag should remain leakfree, protected from direct sunlight, maintained at a temperature that will prevent condensation of any of the gases, and stored in a safe place to prevent damage or tampering prior to analysis. It is recommended that bag samples be analyzed within two hours of sample collection, however, many of the organic compounds are stable enough to allow a few days prior to analysis. Upon completion of the testing and sample recovery, all the data forms should be checked for completeness and the sample bags reexamined for proper identification.

Common Problems - The most common problems encountered with bag sampling techniques are (1) adsorption of the gases on the bag, (2) permeation of the gases through the bag, (3) reaction of gases in the bag, (4) condensation of the gases or water vapor in the bag, and (5) leaks developing in the bag during testing, transport, and/or analysis. As described previously in Subsection 3.0, the bags must be checked for stability and retention of the compound in the bag. If the compound's concentration significantly diminishes between the time the sample run is completed and the time of analysis, then the bag technique will have to be modified or rejected. One modification that can be used to reduce both retention and/or condensation is addition of a heating system. Heating is generally applied during sample collection and maintained through analysis. However, heating may increase the permeation rate. Another option is the use of heat lamps applied to the sample bags after sample collection and during sample analysis. Two other techniques that have been used to prevent condensation are (1) addition of a knockout trap to remove water vapor and heavy organics from the sample stream, and (2) use of sorbents such as Tenax to remove the high boiling point organics. The tester must demonstrate that the organic compound(s) of interest are not removed. Alternatively, sample and/or water vapor condensation may be reduced by the use of the prefilled bag technique. The prefilling of the bag lowers the concentration of the organic and/or water vapor, thereby eliminating condensation.

If the gases are reacting in the bag, then the bag material can be changed, the time between sample collection and analysis reduced, or a different technique used such as direct interface sampling. Methods to reduce bag leak problems are proper construction of the sample bags, conducting additional runs, using a backup sample collection technique such as an another bag sampling system or an adsorption tube sampling system, and care with handling the sampling bags. Also, steel canisters can be used in place of the bags. If the organic compounds are stable with time, the use of steel canisters may better ensure the safety of the sample especially if the samples must be air freighted to the laboratory for analysis.

4.3.2 *Direct Pump Sampling* - Direct pump sampling is conducted in a manner similar to evacuated container sampling, with the exception that the needle valve and the pump are located between the probe and sample bag and the sample exposed surfaces of both must be constructed of stainless steel, Teflon or other material not affected by the stack gas (see Figure 4.5). Due to the additional likelihood that sample may be lost in the needle valve and pump, it is recommended that the probe, sample line, needle valve, and pump be heated. If it has or can be shown that this not a concern, then the heating may be eliminated. All precautions, procedures, data forms and criteria from Subsection 4.3.1 above can be applied. Ensure that the system has been adequately purged before attaching the bag and sampling.

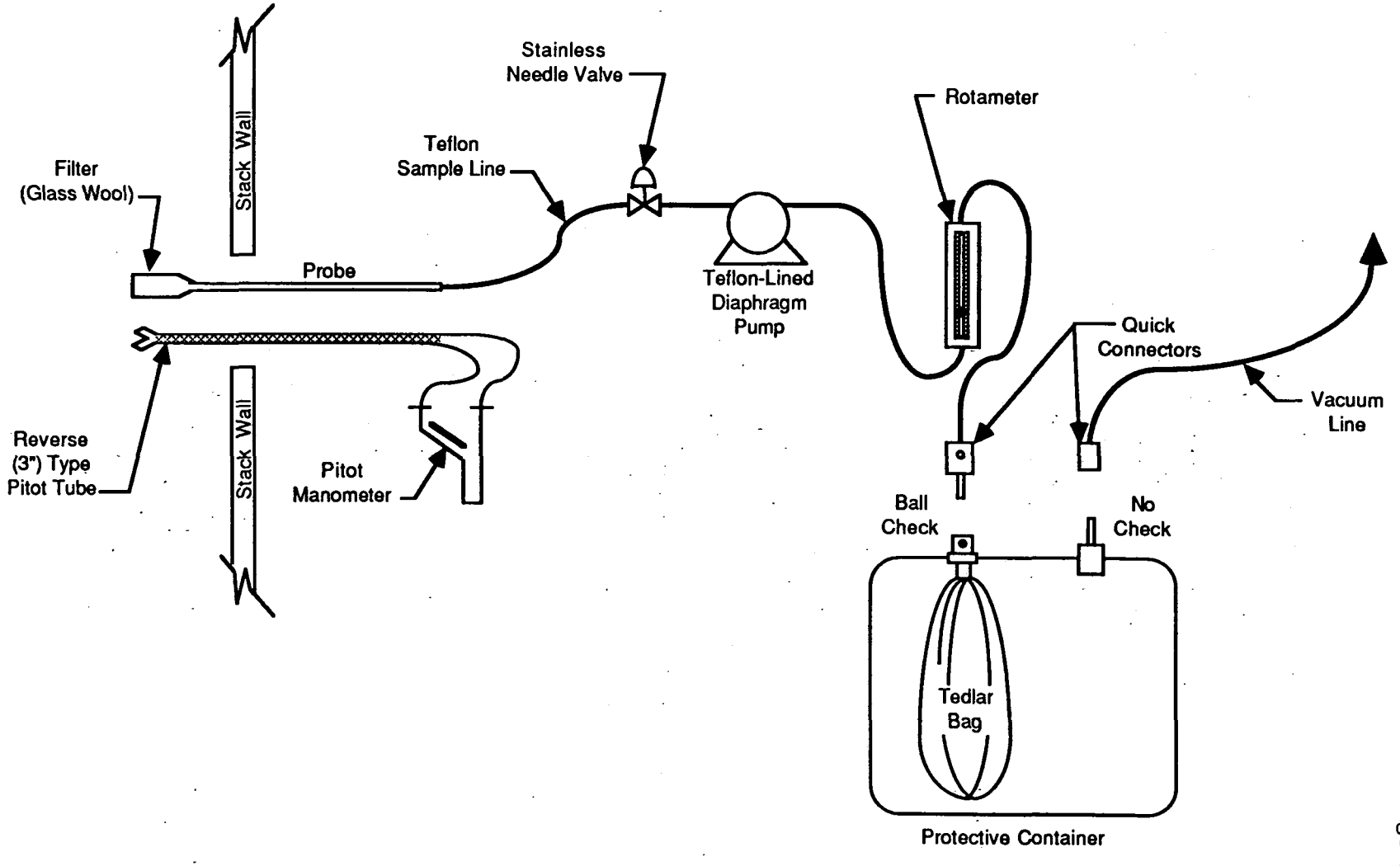

Figure 4.5. Direct pump sampling system.

4.3.3 *Explosion Risk Area Bag Sampling* - Explosion risk area bag sampling is also similar to evacuated container sampling. The major difference is that no electrical components can be used in the explosion risk area. As previously mentioned in Subsection 1.0, the first option of the tester is to locate the electrical equipment (e.g., the pump) outside the explosion risk area and run a long flexible line to the container. If that option is not possible, an evacuated steel container may be used as shown in Figure 4.6. This option may involve a potential spark hazard and must be checked though the plant safety officer. No electrical heating of the system will likely be allowed. If an evacuated steel container is used, the leak check can be conducted outside the explosion risk area and the probe can be purged with a hand squeeze pump. The tester may wish to consider an alternative method of sampling such as adsorption tubes and an intrinsically safe personnel sampling pump or the syringe method. **The primary concern must be safety in an explosion risk area and all operations must be outlined in writing and cleared through the Plant Safety Officer**. The same criteria as described above for suitability of the bag will apply and must be met.

4.3.4 *Prefilled Bag Sampling* - The prefilled bag sampling technique is similar to the heated direct pump sampling method. The major difference is that the sample bag is prefilled with a known volume of nitrogen, hydrocarbon-free air, or cleaned, dried ambient air prior to sampling and the volume of gas sampled must be accurately determined (see Figure 4.5). When using a flowmeter or metering pump, the maximum dilution that should be attempted is 10 to 1. Alternatively, a heated, gas tight syringe may be used to collect the gas at the source and inject it into the sample bag. A heated, gas tight syringe can be used for dilutions of 5 to 1 when the dilution is performed in the syringe and 50 to 1 when performed in the bag. The use of a heated, gas tight syringe should follow the procedures shown below in Subsection 4.3.5. Both techniques should be verified in the laboratory using higher concentrations of calibration gases and must be within 10% of the calculated value. The technique is verified in the field by diluting the audit gases in the same manner as the stack gases (see Subsection 8.0 for auditing procedures).

Following are the recommended steps to conduct prefilled bag sampling:

1. The sampling should be conducted proportionally as described above in Subsection 4.3.1. Calculation of the average sampling rate vs. the average P will be the same with the exception that the volume of the prefilled inert gas must be taken into account.
2. The suitability of the prefilled bag sampling technique should have been checked in the laboratory. This would include calculating the dilution factor required to obtain an acceptable sample concentration.
3. In the laboratory area, fill the sample bag (previously leak checked) with the calculated volume of inert gas. Because of the potential for leaks, bags should be filled the same day they are used. The inert gas volume must be determined with a calibrated dry gas meter or mass flowmeter. The bag should be sealed and taken to the sampling site.
4. At the sampling site, the sampling system is leak checked without the sampling bag attached. Turn on the heating system and heat the system to the stack temperature. Connect a U-tube H_2O manometer or equivalent to the inlet of the probe. After the system comes to the desired temperature, turn on the pump and pull a vacuum of about 10 in. of H_2O. Turn off the needle valve and shut off the pump. If there is no noticeable leak within 30 seconds, then the system is leak free.
5. Place the probe in the stack at the sampling point (centroid or no less

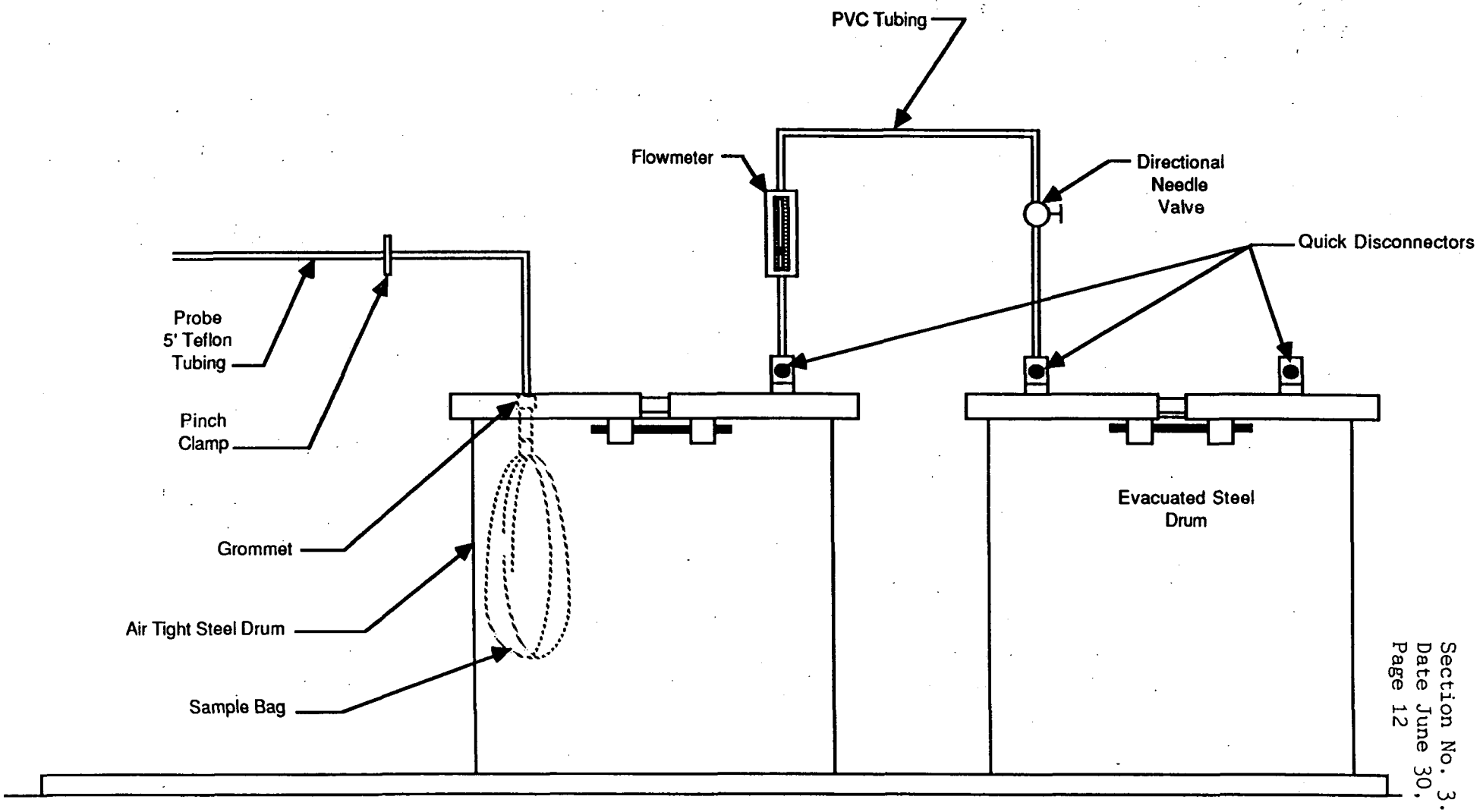

Figure 4.6. Explosion risk area sampling system option using an evacuated steel container.

than 1 meter from the wall) and seal the port so there will be no inleakage of ambient air. Turn on the pump and purge the system for 10 minutes. During the time that the system is purging, determine and set the proper flow rate based on the ΔP.

6. Turn off the pump and attach the sample bag. Compare the heating system
7. The sampling will be conducted proportionally. The stack temperature and heating system temperature should be monitored and recorded. Record the data on the sampling data form (Figure 4.1).
8. At the conclusion of the run, turn off the pump and remove the probe from the duct. Remove the bag and seal it.
9. Conduct a final leak check. The system should pass the leak check; if it does not pass, repeat the run.

4.3.5 *Heated Syringe Sampling* - The heated syringe technique can be used with the prior approval of the Administrator. This technique should only be used when other techniques are impractical. The heated syringe technique requires on-site analysis with three syringes collected and analyzed for each run. The requirements for the use of the syringes are the same as for the bag with regard to the reaction of the gases with time and the retention of the gases in the syringe.

Following are the procedures recommended for the syringe sampling technique:

1. If heating is required, then the syringe must be encased in material that has a high density to maintain the proper temperature. Alternatively, an external heating system can be used that keeps the syringe at the proper temperature until just before use and to which the syringe can be immediately returned.
2. The access port should be extremely small to prevent inleakage of ambient air. The port may be covered with Teflon or other nonreactive material that will allow the syringe to penetrate the material for sampling.
3. For the direct injection method (no dilution), place the syringe needle into the stack and fill and discharge the full volume that will be sampled three times. Then, draw the emission sample into the syringe, immediately seal the syringe and return to the heating system, if applicable. The second and third syringes are sampled at equal time intervals spanning the required sample (run) time. The syringe samples must not be taken one immediately after another.
4. For the diluted syringe method, the inert gas is introduced into the syringe three times and discharged. Following this, the proper volume of inert gas is pulled into the syringe. The syringe is then placed into the duct and the proper volume of stack gas is added. Immediately remove the syringe needle from the duct, seal the syringe, and return to the heating system, if applicable.
5. For the bag diluted syringe method, the bag should be prefilled with the proper volume of inert gas. The sampling is conducted as described above and the sample injected into the bag through a septum.
6. Record the data on a field sampling data form (can adapt Figure 4.1).
7. Since the method requires a proportional sample to be collected, the velocity head (ΔP) should be recorded at about the same time that each sample is collected. The concentrations can then be mathematically corrected to provide an integrated value. If the process is a constant source operation (less than 10% change in flow over the sampling period), it is not necessary to correct the measured values.

4.3.6 *Direct Interface Sampling* - The direct interface procedure can be used provided that the moisture content of the stack gas does not interfere with the analysis procedure, the physical requirements of the equipment can be met at the site, and the source gas concentration is low enough that detector saturation is not a problem. Adhere to all safety requirements when using this method. Because of the amount of time the GC takes to resolve the organic compounds prior to their analysis, the GC can only typically make three analyses in a one-hour period. Therefore, the number of injections in the direct interface method is greatly limited by the resolution time. At least three injections must be conducted per sample run.

Following are the procedures recommended for extracting a sample from the stack, transporting the sample through a heated sample line, and introducing it to the heated sample loop and the GC. The analysis of the sample is described in Subsection 5.0.

1. Assemble the system as shown Figure 4.7, making all connections tight.
2. Turn on the sampling system heaters. Set the heaters to maintain the stack temperature as indicated by the stack thermocouple. If this temperature is above the safe operating temperature of the Teflon components, adjust the heating system to maintain a temperature adequate to prevent condensation of water and organic compounds.
3. Turn on the sampling pumps and set the flow rate at the proper setting. Typically 1 L/min is used.
4. After the system reaches the same temperature as the stack, connect a U-tube H_2O manometer or eqivalent to the inlet of the probe. Pull a vacuum of about 10 in. of H_2O, and shut off the needle valve and then the pump. The vacuum should remain stable for 30 seconds. If the system leaks, repair and then recheck the system.
5. Calibrate the system as described in Subsection 5.0. Repeat until duplicate analyses are within 5% of their mean value (Subsection 5.0).
6. Conduct the analyses of the two audit samples as described in Subsection 8.1. The results must agree within 10% of the true value (or greater, if specified on the cylinder). If the results do not agree, repair the system and repeat the analyses until agreement is met or until approval is given by the representative of the Administrator.
7. After the audit has been successfully completed, place the inlet of the probe at the centroid of the duct, or at a point no closer to the walls than 1 meter, and draw stack gas into the probe, heated line, and sample loop. Purge the system for a least 10 minutes.
8. Record the field sampling data on a form such as Figure 4.2.
9. Conduct the analysis of the sample as described in Subsection 5.0. Record the data on the applicable data form (Figure 5.1, Subsection 5.0). Ensure that the probe and sample lines are maintained at 0°C to 3°C above the stack temperature (or a temperature which prevents condensation).
10. Conduct the posttest calibration as described in Subsection 5.0.

4.3.7 *Dilution Interface Sampling* - Source samples that contain a high concentration of organic materials may require dilution prior to analysis to prevent saturating the GC detector. The apparatus required for this direct interface procedure is basically the same as described above, except a dilution system is added between the heated sample line and the gas sampling valve. The apparatus is arranged so that either a 10:1 or 100:1 dilution of the source gas can be directed to the chromatograph. The description of the apparatus is presented in Subsection

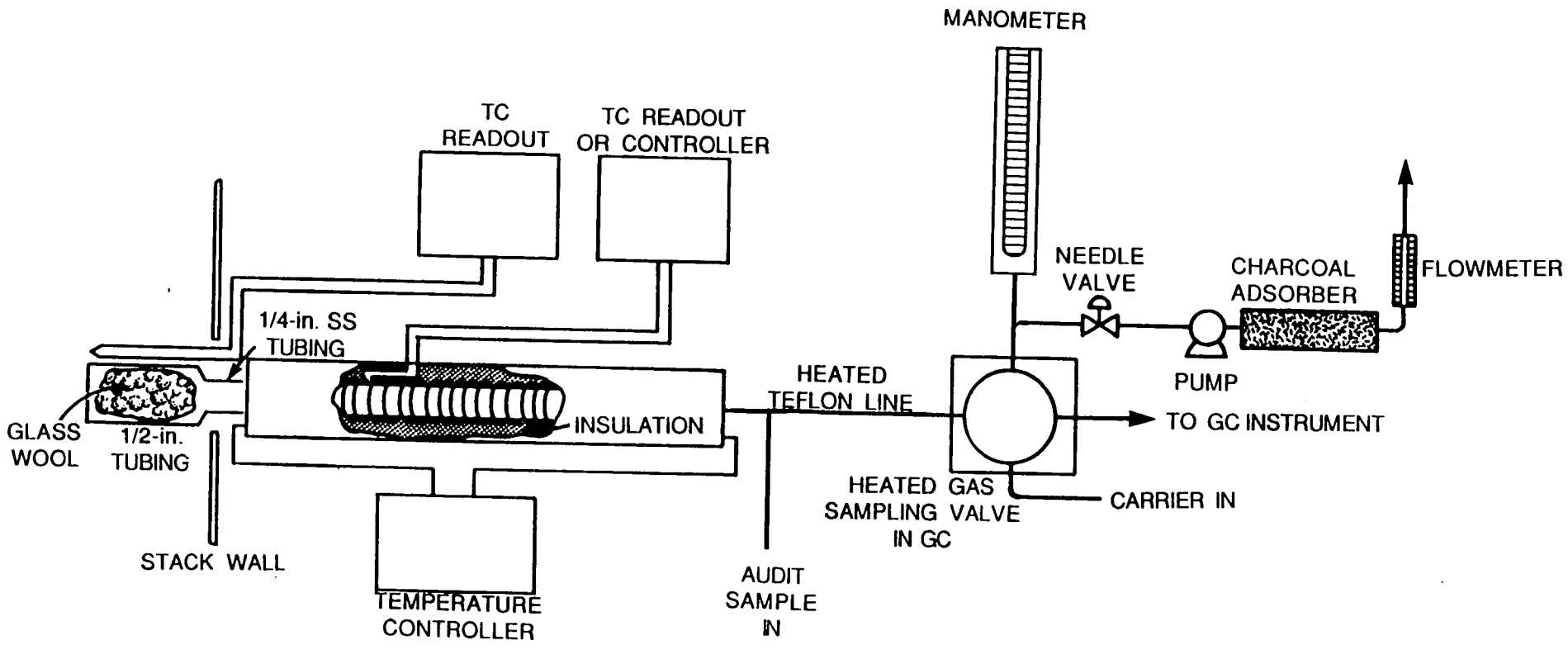

Figure 4.7. Direct interface sampling system.

1.1.9 and the pretest calibration of the apparatus is presented in Subsection 2.2.1.

Following are the procedures recommended for extracting a sample from the stack, diluting the gas to the proper level, transporting the sample through a heated sample line, and introducing it to the heated sample loop and the GC. The analysis of the sample is described in Subsection 5.0.

1. Assemble the apparatus by connecting the heated box, as shown in Figure 4.8, between the heated sample line from the probe and the gas sampling valve on the chromatograph. Vent the source gas from the gas sampling valve directly to the charcoal filter, eliminating the pump and rotameter.
2. Measure the stack temperature, and adjust all heating units to a temperature 0°C to 3°C above this temperature. If the temperature is above the safe operating temperature of the Teflon components, adjust the heating to maintain a temperature high enough to prevent condensation of water and organic compounds.
3. After the heaters have come to the proper temperature, connect a U-tube H_2O manometer or eqivalent to the inlet of the probe. Turn on the pump and pull a vacuum of about 10 in. of H_2O. Shut off the needle valve and then turn off the pump. The vacuum reading should remain stable for 30 seconds. If a leak is present, repair and then recheck the system.
4. Verify operation of the dilution system by introducing a calibration gas at the inlet of the probe. The diluted calibration gas should be within 10% of the calculated value. If the results for the diluted calibration gas are not within 10% of the expected values, determine whether the GC and/or the dilution system is in error. If the analyses are not within acceptable limits because of the dilution system, correct it to provide the proper dilution factors. Make this correction by diluting a high concentration standard gas mixture to adjust the dilution ratio as required.
5. Verify the GC operation using a low concentration standard by diverting the gas into the sample loop and bypassing the dilution system as described in Subsection 5.1. If these analyses are not within acceptable limits, correct the GC by recalibration, etc.
6. Conduct the analyses of the two audit samples as described in Subsection 8.1 using either the dilution system or directly connect the gas sampling valve as required. The results must agree within 10% of the true value or greater value if specified on the cylinder. If the results do not agree, repair the system and repeat the analyses until agreement is met or until approval is given by the representative of the Administrator.
7. After the dilution system and GC operations are properly verified and the audit successfully completed, place the probe at the centroid of the duct or at a point no closer to the walls than 1 meter, and purge the sampling system for at least 10 minutes at the proper flow rate. Conduct the analysis of the sample as described in Subsection 5.0. Record the field and analytical data on the applicable data forms (Figures 4.2 and 5.1). Ensure that the probe, dilution system, and sample lines are maintained at 0°C to 3°C above the stack temperature (or a temperature which prevents condensation).
8. Conduct the posttest calibration and verification of the dilution system as described in Subsection 5.0.

If the dilution system is used for bag sampling, the procedures for verifying operation of the dilution system will be the same as shown above. The diluted calibration gas will be collected in a bag and then verified. Also the audit samples will be collected in a bag and analyzed. Acceptable results must be

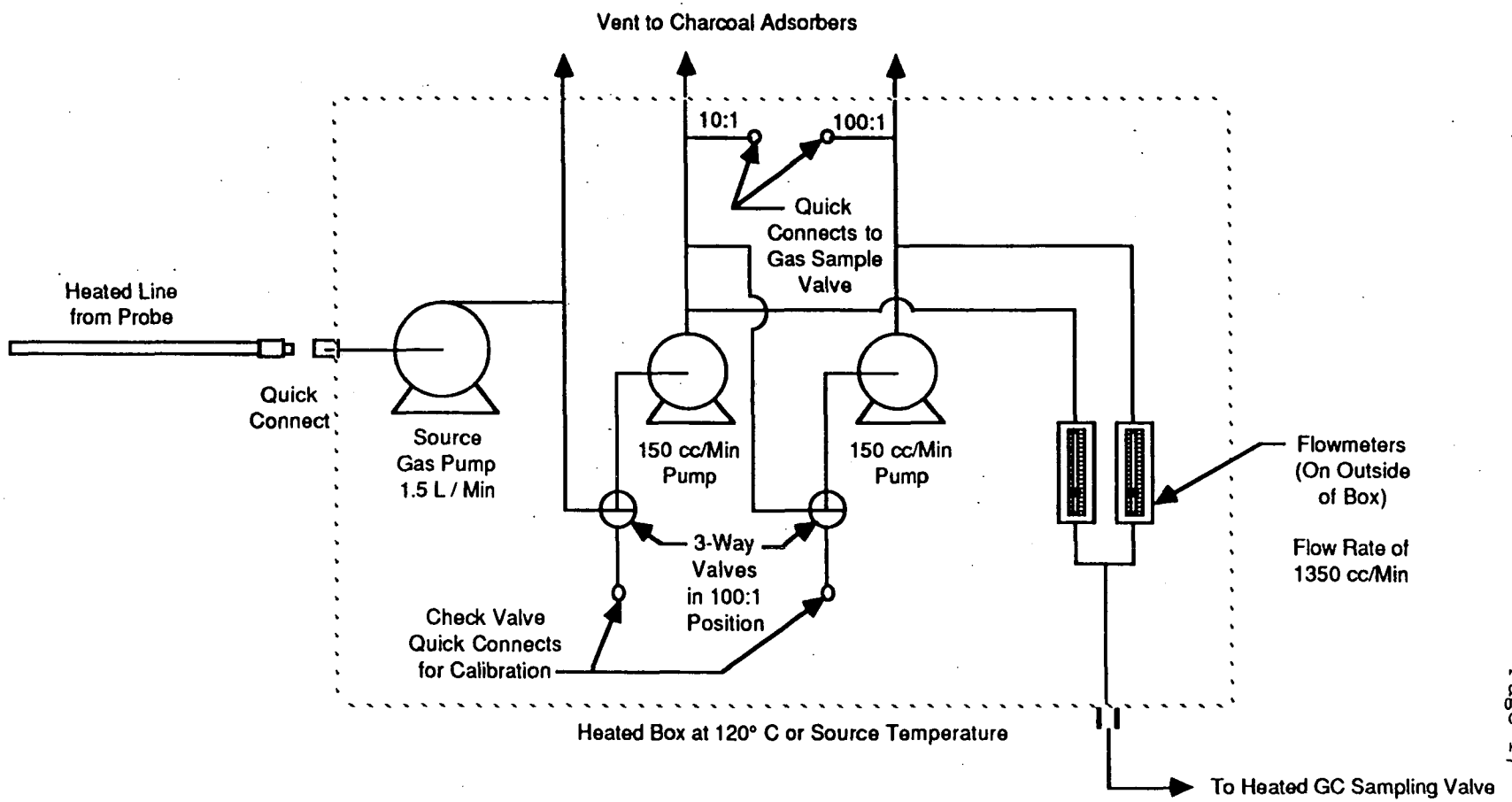

Figure 4.8. Schematic diagram of the heated box required for dilution interface sampling.

obtained for the audit samples prior to analysis of the field samples.

4.3.8 *Adsorption Tube Sampling* - Adsorption tube sampling can be used for those organics specified in the Method Highlights Section, Table B, and for other compounds as specified in the National Institute of Occupational Safety and Health (NIOSH) methods. The selection and use of adsorption tubes must be validated in the laboratory as discussed in Subsections 3.3 and 3.4 or through the use of the literature. This check will include selecting the proper adsorption material, and then checking the capacity, breakthrough volume, adsorption efficiency, and desorption efficiency. The adsorption efficiency can be greatly affected by the presence of water vapor and other organics in, and temperature of the stack gas. If sampling is conducted for more than one organic compound, the adsorption and desorption efficiency checks must consider each. Because changes in process and control equipment conditions can greatly affect all of the parameters stated above, it is recommended as a standard operating procedure that more than one adsorption tube be used. The first tube is analyzed as described in Subsection 5.0. If no problems are found, then the second tube can be discarded. If problems with the first tube's adsorption efficiency are discovered, then the primary section of the second tube can still be analyzed and the results included with those of the primary portion of the first tube.

Following are the recommended procedures for adsorption tube sampling:

1. The sampling system is assembled as shown in Figure 4.9. The adsorption tube(s) must be maintained in a vertical direction for sampling. This is done to prevent channeling of the gases along the side of a tube. It is recommended that the sampling probe be eliminated when possible. If a sample probe is used, it should be cleaned prior to its initial use with the extraction solvent. Teflon tubing should be used for the probe and sample line.
2. Just prior to sampling, break off the ends of the adsorption tubes to provide an opening at least one-half of the internal diameter. Audit samples must be collected on the adsorption tubes during the test program as described in Subsection 8.0. Since on-site analysis is typically not conducted when using adsorption tubes, it is recommended that two samples be collected from each of the two audit cylinders. This allows the tester a second chance to obtain the proper value for each audit cylinder.
3. Prior to sampling and the collection of the audit samples, the sampling system must be leak checked by connecting a U-tube H_2O manometer or equivalent to the inlet of the sample probe or adsorption tube. Turn the pump on and pull a vacuum of about 10 in. of H_2O. Shut off the needle valve and then turn off the pump. The vacuum must remain stable for 30 seconds. If a leak is present, repair and recheck the system.
4. If the flow rate in the duct varies by more than 10% during the sampling period, the sample should be collected proportionally. The proportional sampling procedures will be the same as described for the bag sampling. The only difference is that instead of using the volume of the bag as the limiting factor to determine the average sampling rate, the breakthrough volume is the limiting factor. If the source is a constant rate source (less than a 10% change in flow rate for the sampling period), the samples can be collected at a constant rate.
5. Prepare the field blank just prior to sampling. The field blank will be handled in be same manner as the field samples and should be from the same lot as the other adsorption tubes.
6. The flow rate meter must have been calibrated in the laboratory prior to

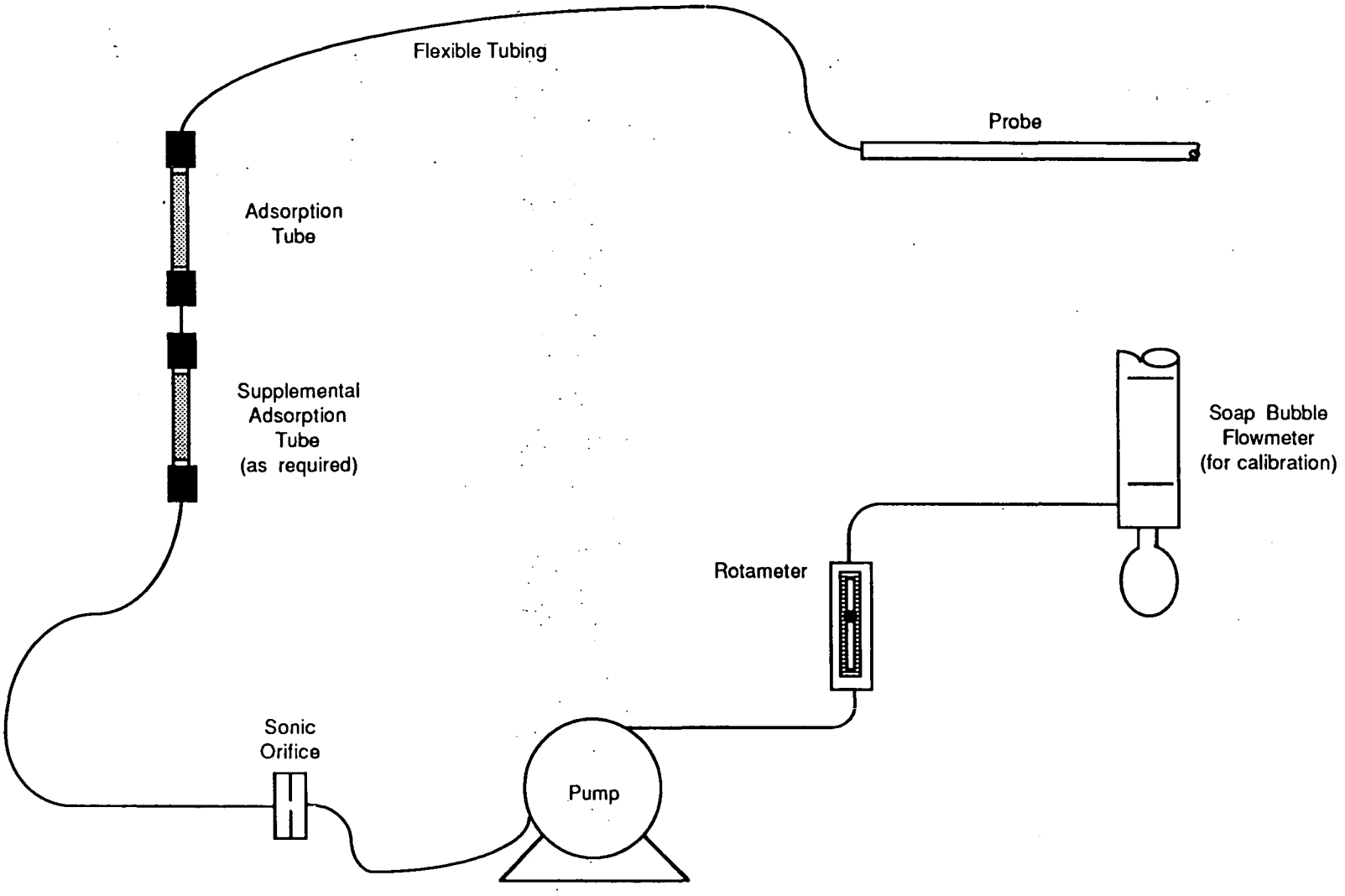

Figure 4.9. Adsorption tube sampling system.

the field trip as described in Subsection 2.1. The volume of sample collected must be accurately known for adsorption tube sampling.

7. The sample run time must be equal to or greater than that specified by the applicable regulation. During each sample run, the data should be recorded on the sample data form (Figure 4.3 or equivalent).
8. At the conclusion of each run, conduct another leak check as described above. If the system does not pass the leak check, the run should be rejected, the leak located and repaired, and another run conducted.
9. After completing a successful leak check, remove the adsorption tube from the holder and seal both ends with plastic caps. The tubes should be packed lightly with padding to minimize the chance of breakage. If the samples are to be held for an extended period of time, they should be kept cool to reduce the amount of migration of the organic from the primary section to the secondary section. Note: Pack the tubes separately from bulk samples to avoid possible contamination.
10. It is recommended, that at the conclusion of the test, the sample probe (if used) be rinsed into a 20-ml glass scintillation vial with about 5 to 10 ml of the desorption solvent. This sample will be analyzed as a check on the loss of the organic in the probe during sampling. If more than 10% of the total sample collected in the adsorption tubes is present in the probe, the samples should be rejected or the sample catch adjusted to account for the loss. Alternatively, the probe can be rinsed after each run and the rinse added to the desorption solvent prior to analysis.
11. At the conclusion of the test program, check all samples to ensure that they are uniquely identified and check all data sheets to ensure that all data has been recorded.

WATER VAPOR CONTENT

Method 4

Reference Method conducted in proper manner _____ (Handbook Section 3.3, Method 4, Figure 4.1)

Wet Bulb/Dry Bulb

Temperature readings taken when stabilized _____
WB Temp °C (°F)_____ DB Temp °C (°F) _____

DIRECT OR DILUTION BAG SAMPLING

Apparatus

Pitot tube: Type S _____ Other _____, Properly attached _____
Pressure gauge: Manometer _____ Other _____, Sensitivity _____
Probe liner: Borosilicate _____ Stainless steel _____ Teflon _____
Clean _____, Probe heater (if applicable) on _____ Glass wool filter (if applicable) in place _____ Stainless steel or Teflon unions used to connect to sample line _____
Sample line: Teflon _____, Cleaned _____, Heated (if applicable) _____
Bag: Tedlar _____ Other _____, Blank checked _____, Leak checked _____
Reactivity check _____, Retention check _____
Flowmeter: Proper range _____, Heated (if applicable) _____, Calibrated _____
Pump: Teflon coated diaphram _____, Positive displacement pump _____, Evacuated canister _____, Personnel pump _____
Heated box with temperature control system: Maintained at proper temperature _____
Charcoal adsorption tube to adsorb organic vapors: Sufficent capacity _____
Dilution equipment: N_2 gas _____, Hydrocarbon-free air _____, Cleaned and dried ambient air _____, Dry gas meter _____
Barometer: Mercury _____, Aneroid _____, Other _____
Stack and ambient temperature: Thermometer _____, Thermocouple _____, Calibrated _____

Procedures

Recent calibration (if applicable): Pitot tube _____, Flowmeter _____, Positive displacement pump* _____, Dry gas meter* _____, Thermometer _____, Thermocouple _____, Barometer _____
Sampling technique: Indirect bag _____, Direct bag ____, Explosion risk bag _____, Dilution bag _____, Heated syringe _____, Adsorption tube _____, Proportional rate _____, Constant rate _____, Direct interface _____, Dilution interface _____

*Most significant items/parameters to be checked.

Figure 4.10. On-site measurements checklist.

Figure 4.10 (Continued)

Filter end of probe (if applicable) and pitot tube placed at centroid of duct (or no closer than 1 meter to stack wall) and sample purged through the probe and sample lines* _____
Vacuum line attached to sample bag and system evacuated until the flowmeter indicates no flow (leakless)* _____
Heated box (if applicable) same temperature as duct* _____
Velocity pressure recorded and sample flow set _____
Proportional rate sampling maintained during run* _____
Stack temperature, barometric pressure, ambient temperature, velocity pressure at regular intervals, sampling flow rate at regular intervals, and initial and final sampling times recorded* _____
At conclusion of run, pump shut off, sample line and vacuum line disconnected and valve on bag closed _____
Heated box (if applicable) maintained at same temperature as duct until analysis conducted _____
No condensation visible in bag* _____
Sample bag and its container protected from the sunlight _____
Audit gases collected in bags using sampling system* _____
Explosive area bag sampling: (with following expections same as above) _____
Pump is replaced with an evacuated canister or sufficient additional line is added between the sample bag container and the pump to remove the pump from the explosive area _____
Audit gases collected in bags using sampling system* _____
Prefilled bag: Proportional rate _____ Constant rate _____
Dilution factor determined to prevent condensation* _____
Proper amount of inert gas metered into bag through a properly calibrated dry gas meter* _____
Filter end of probe (if applicable) and pitot tube placed at centroid of duct (or no closer than 1 meter to stack wall) and sample purged through the heated probe, heated sample line, and heated flowmeter or positive displacement pump* _____
Leak checked and partially filled bag attached to sample line _____
Stack temperature, barometric pressure, ambient temperature, velocity pressure at regular intervals, sampling rate at regular intervals, and initial and final sampling times recorded* _____
Probe, sample line, and properly calibrated flowmeter or positive displacement pump maintained at the stack temperature* _____
Sampling conducted at the predetermined rate, proportionally or constant for entire run* _____
No condensation visible in probe, sample lines, or bag* _____
At conclusion of run, pump shut off, sample line disconnected and valve on bag closed _____
Sample bag and its container protected from sunlight _____
Audit gases collected in bags using dilution system* _____

Sample Recovery and Analysis

(As described in "Postsampling operations checklist," Figure 5.10)

*Most significant items/parameters to be checked.

Figure 4.10 (Continued)

DIRECT AND DILUTION INTERFACE

Apparatus

Probe: Stainless steel _____, Glass _____, Teflon _____, Heated system (if applicable) _____, Checked _____
Heated sample line: Checked* _____
Thermocouple readout devise for stack and sample line: Checked* _____
Heated gas sample valve: Checked* _____
Leakless Teflon-coated diaphram pump: Checked* _____
Flowmeter: Suitable range _____
Charcoal adsorber to adsorb organic vapors _____
Gas chromatograph and calibration standards (as shown in "Postsampling operations checklist," Figure 5.10)* _____

For dilution interface sampling only:
Dilution pump: Positive displacement pump or calibrated flowmeter with Teflon-coated diaphram pump checked* _____
Valves: Two three-way attached to dilution system _____
Flowmeters: Two to measure dilution gas, checked* _____
Heated box: Capable of maintaining 120°C and contains three pumps, three-way valves, and connections, checked* _____
Diluent gas and regulators: N_2 gas ____, Hydrocarbon-free air ____, Cleaned air _, Checked _____

Procedures

All gas chromatograph procedures shown in "Postsampling operations checklist" (Figure 5.10)
Recent calibration: Thermocouples _____, Flowmeter _____, Dilution system (for dilution system only)* _____
Filter end of heated probe placed at centroid of duct (or no closer than 1 meter to stack wall), probe and sample line heat turned on and maintained at a temperature of 0°C to 3°C above the source temperature while purging stack gas _____
Gas chromatograph calibrated while sample line purged* _____
After calibration, performance audit conducted and acceptable* _____
Sample line attached to GC and sample analyzed after thorough flushing* _____
With probe removed from stack for 5 min, ambient air or cleaned air analysis is less than 5% of the emission results* _____
Probe placed back in duct and duplicate analysis of next calibration conducted until acceptable agreement obtained* _____
All samples, calibration mixtures, and audits are analyzed at the same pressure through the sample loop* _____

Sample Analysis

(As shown in "Postsampling operations checklist," Figure 5.10)

*Most significant items/parameters to be checked.

Figure 4.10 (Continued)

If a dilution system is used, check the following:
With the sample probe, sample line, and dilution box heating systems on, probe and source thermocouple inserted into stack and all heating systems adjusted to a temperature of 0°C to 3°C above the stack temperature _____
The dilution system's dilution factor is verified with a high concentration gas of known concentration (within 10%) _____
The gas chromatograph operation verified by diverting a low concentration gas into sample loop _____
The same dilution setting used throughout the run _____
The analysis criteria is the same shown as for the direct interface and in the "Postsampling operations checklist," Figure 5.10

ADSORPTION TUBES

Apparatus

Probe: Stainless steel _____, Glass _____, Teflon _____, Heated system and filter (if applicable) _____
Silica gel tube or extra adsorption tube used prior to adsorption tube when moisture content is greater than 3 percent _____
Leakless sample pump calibrated with limiting (sonic) orifice or flowmeter _____
Rotameter to detect changes in flow _____
Adsorption tube: Charcoal (800/200 mg), Silica gel (1040/260 mg) _____
Stopwatch to accurately measure sample time _____

Procedures

Recent calibration of pump and flowmeter with bubble meter _____
Extreme care is taken to ensure that no sample is lost in the probe or sample line prior to the adsorption tube _____
Pretest leak check is acceptable (no flow indicated on meter) _____
Total sample time, sample flow rate, barometric pressure, and ambient temperature recorded _____
Total sample volume commensurate with expected concentration and recommended sample loading factors _____
Silica gel tube or extra adsorption tube used prior to adsorption tube when moisture content is greater than 3 percent _____
Posttest leak check and volume rate meter check is acceptable (no flow indicated on meter, posttest calculated flow rate within 5 percent of pretest flow rate)

Sample Analysis

(As shown in the "Postsampling operations checklist," Figure 5.10)

*Most significant items/parameters to be checked.

Table 4.1. ACTIVITY MATRIX FOR ON-SITE MEASUREMENTS

Characteristic	Acceptance limits	Frequency and method of measurement	Action if requirements are not met
Preliminary determinations and measurements	If final results on concentration basis, determine the moisture content of stack gas	Once each field test; use wet bulb/dry bulb thermometer, Method 4, or sling psychrometer	Complete
	If final results on emission rate basis, determine moisture content and flow rate of stack gas	See above for moisture content; for flow rate, once each field test using Method 1 location, if possible, and Method 2 procedures	Complete
	If process has $\geq$10% variation in ΔP_{ave}, sampling must be conducted proportionally	Determine before test by measuring ΔP_{ave} and range of fluctuation; if required, use ΔP_{ave} and ΔP measured during sampling to vary sampling flow rate to sample proportionally	Complete or repeat sampling
	If preliminary survey or information showed a heating system necessary for sampling, determine stack gas temperature, T_s	Prior to and during sampling	Complete or repeat sampling
	Determine stack dimensions	Prior to sampling, using tape measure	Complete
	Select sampling time $\geq$ minimum total sampling time in applicable emission standard; number or minutes between readings should be an integer	Prior to sampling	Complete

(Continued)

Table 4.1 (Continued)

Characteristic	Acceptance limits	Frequency and method of measurement	Action if requirements are not met
Evacuated container sampling	1. Assemble system using Fig. 4.4; no leakage	Before sample collection, visually and physically inspect all connections	Check for leaks, repair system; repeat check
	2. Minimum vacuum of 10 in. of H_2O; stable for 30 s	Before sample collection; use a H_2O-filled U-tube manometer or equivalent	Check system for leaks; check pump, joints, and valves for source of leak; repair and recheck
	3. Heating system, if used, between 0° and 3°C above T_s	Confirm prior to and monitor during sampling using temperature sensor(s)	Adjust heating system
	4. Locate probe tip at centroid of stack or no closer than 1 meter to walls of stack	Prior to sampling; determine using stack dimensions	Reposition
	5. Purge probe and sample system, 5 times system volume or 10 minutes, whichever is greater	Before sample collection; with bag unattached, turn on pump	Repeat purge
	6. Sample proporionally based on ΔP_{ave} and monitored ΔP	Throughout sampling	Repeat test
Direct pump sampling	1. Assemble system using Fig. 4.5; sample exposed components of Teflon, stainless steel, etc; no leakage	Before sample collection, visually and physically inspect all equipment and connections	Check for leaks, repair system; replace inappropriate components

(Continued)

Table 4.1 (Continued)

Characteristic	Acceptance limits	Frequency and method of measurement	Action if requirements are not met
Direct pump sampling (cont)	2. Follow steps 2-6 for evacuated bag sampling	As above	As above
Explosion risk area bag sampling	1. Assemble system, Figure 4.6 is one option; no electrical components in explosion risk area; no leakage	As above	As above
	2. Leak check as above outside explosion risk area	As above	As above
	3. Purge probe with a hand squeeze pump changing volume at least 5 times	As above	As above
	4. Follow steps 4 and 6 for evacuated bag sampling	As above	As above
	5. Clear all operations in writing through Plant Safety Officer	Prior to working in explosion risk area	Complete
Prefilled bag sampling	1. Assemble system using Fig. 4.5; need calibrated flowmeter in-line	As above for evacuated bag sampling	As above for evacuated bag sampling
	2. Calculate acceptable dilution factor	Prior to sampling	Complete
	3. Leak check bag	Prior to filling	Repair or replace

(Continued)

Table 4.1 (Continued)

Characteristic	Acceptance limits	Frequency and method of measurement	Action if requirements are not met
Prefilled bag sampling (cont)	4. Fill bag with known volume of inert gas	Prior to sampling; use calibrated dry gas meter or mass flow-meter	Complete
	5. Leak check system at stack temperature, minimum vacuum of 10 in. of H_2O, stable for 30 s	Before sample collection without bag attached; use U-tube H_2O-filled manometer or equivalent	Locate leak, repair or replace components, and recheck
	6. Follow steps 3-6 for evacuated bag sampling	As above	As above
	7. Determine volume of gas sampled accurately	During sample collection; use flowmeter or metering pump (max. dilution 10 to 1) or heated syringe, (see below (max. dilution 50 to 1)	Complete
Heated syringe sampling - direct injection	1. Check syringes for compound retention and reaction	See Subsection 1.0	Complete
	2. Seal port to prevent inleakage of ambient air	Visually check	Reseal and re check
	3. Place needle in stack at sample point, pull and discharge sample volume three times	Prior to sampling	Complete

(Continued)

Table 4.1 (Continued)

Characteristic	Acceptance limits	Frequency and method of measurement	Action if requirements are not met
Heated syringe sampling - direct injection (cont)	4. Seal after pulling sample volume, return to heating system, if necessary; monitor heating system temperature	For each sample collection; use temperature sensor	Complete
	5. Choose sample volumes to sample proportionally; monitor ΔP, if necessary (>10% change in flow over sampling period)	During sample collection; use pitot tube	Repeat sampling
	6. Take second and third syringe samples at equal time intervals spanning the required sampling time in applicable emission standard	During field test	Repeat sampling
Heated syringe sampling - dilution method	1. Follow same steps as for heated syringe - direct injection, except prefill bag (see steps 2-4 in prefilled bag sampling) and inject gas in heated syringe through bag septum	As above	As above

(Continued)

Table 4.1 (Continued)

Characteristic	Acceptance limits	Frequency and method of measurement	Action if requirements are not met
Direct interface sampling	1. Assemble system using Fig. 4.7; no leakage	Before sample collection visually and physically inspect all connections	Check for leaks; repair system; repeat check
	2. Heating system between 0° and 3°C above T_s	Confirm prior to and monitor during sampling using temperature sensors	Adjust
	3. Set flow rate at 1 L/min	Prior to sampling	Complete
	4. Leak check system at stack temperature at minimum vacuum of 10 in. of H_2O; stable for 30 s	During sampling; use a U-tube H_2O manometer or equivalent	Check system for for leaks; repair and recheck
	5. Calibrate system; duplicate analyses within 5% of their mean	See Subsection 5.0	Identify problems; recalibrate and check
	6. Analyze audit cylinders; results within 10% of true value	See Subsection 8.0	Reject samples and rerun test
	7. Follow steps 4 and 5 of evacuated bag sampling	As above	As above
	8. Analyze samples and conduct posttest calibration	See Subsection 5.0	Complete

(Continued)

Table 4.1 (Continued)

Characteristic	Acceptance limits	Frequency and method of measurement	Action if requirements are not met
Dilution interface sampling	1. Follow all steps for direct interface sampling with addition of steps below	As above	As above
	2. Assemble with dilution system in line, see Figure 4.8	As above	As above
	3. If Teflon components cannot withstand stack temperature, heating system should be set to prevent condensation	Prior to and during sampling	Adjust
	4. Verify dilution system to within 10% of expected value	Prior to sampling; use a calibration gas	Pinpoint problem to dilution system or GC; repair and recheck; adjust dilution, if necessary
Adsorption tube sampling	1. Assemble system using Figure 4.9	Before sample collection, visually and physically check all connections	Check for leaks, repair, and recheck
	2. Break off ends of adsorption tubes; maintain in vertical position for sampling	Just prior to sampling; during sampling	Complete and check
	3. Follow step 4 for direct interface for leak check	As above	As above

(Continued)

Table 4.1 (Continued)

Characteristic	Acceptance limits	Frequency and method of measurement	Action if requirements are not met
Adsorption tube sampling (cont)	4. Conduct sampling proportionally, if the flow rate varies more than 10%	During sampling	Repeat test
	5. Determine sampling time, ≥ requirement of applicable emission standard	Prior to sampling	Complete
	6. Run field blanks	Once each set of samples	Complete
	7. Perform posttest leak check as above	As above	Reject sample, rerun test
Sample recovery	1. If applicable, remove samples from sampling system	Following sampling	Complete
	2. Protect bag samples from sunlight and maintain at a temperature which will prevent condensation	Following sampling	Complete
	3. Analyze bag samples within two hours of sampling	Following sampling	Complete
	4. For adsorption tube samples, perform at least one probe rinse with desorption solvent to confirm that ≤10% of sample is collected in probe	Following sampling; analyze sample with GC	Adjust sample values to account for probe catch

(Continued)

Table 4.1 (Continued)

Characteristic	Acceptance Limits	Frequency and method of measurement	requirements are not met
Sample logistics	Properly label all bags, containers, tubes, etc.	Visually check each sample	Complete the labeling
	Record all data on forms in Figs. 4.1, 4.2, and 4.3 and 5.1	As above	Complete the data records

5.0 POSTSAMPLING OPERATIONS

The postsampling operations for Method 18 include preparation of calibration standards appropriate for the sampling technique used, determination of desorption efficiency and collection efficiency for adsorption tubes (if used), adsorption tube sample preparation, sample analysis, and determination of acceptable resolution and precision. See Subsection 3.1.5 for postsampling operations related to velocity determinations and Subsection 3.3.5 for postsampling operations related to determination of the flue gas or duct moisture. Figure 5.10 at the end of this section provides a checklist for monitoring the postsampling operations. Table 5.1 at the end of the section summarizes the quality assurance activities associated with the postsampling operations.

5.1 Preparation of Calibration Standards

Calibration standards are to be prepared prior to sample analysis following the procedures described in the following subsections. Refer to Table E in the Method Highlights Section for recommendations on the procedures suitable for selected compounds. Note that there are two basic types of standards, gaseous or liquid; the type prepared depends on the type of sample collected. Gaseous calibration standards will be needed prior to the analysis of preliminary survey samples collected in glass flasks or bags, and final samples collected in bags or by direct and dilution interface sampling. There are three techniques for preparing gaseous standards, depending on availability and the chemical characteristics of the standard compound(s); gas cylinder standards may also be used directly, if the proper concentration ranges are available. Liquid calibration standards are required for the analysis of adsorption tube samples from the preliminary survey and/or the final sampling, as well as to determine the desorption efficiency; there are two techniques for preparing liquid calibration standards. The concentrations of the calibration standards should bracket the expected concentrations of the target compound(s) at the source being tested. Specific procedures for preparing and analyzing each type of standard are described below.

For each target compound, a minimum of three different standard concentrations are required to calibrate the GC. An exception to this requirement involves developing relative response factors for each compound to be tested as compared to a single organic compound. Once in the field, the GC is calibrated for all target compounds using the single organic. The validity of this procedure must be first be proven in the laboratory prior to the test. To save time, multiple component standards can be prepared and analyzed provided the elution order of the components is known.

It is recommended that the linearity of the calibration curve be checked comparing the actual concentration of the calibration standards to the concentration of the standards calculated using the standard peak areas and the linear regression equation. The recommended criteria for linearity is for the calculated concentration for each standard be within 7% of the actual concentration.

After establishing the GC calibration curve, an analysis of the audit cylinder is performed as described in Subsection 8.1. For an instrument drift check, a second analysis of the calibration standards and generation of a second calibration curve is required following sample analysis. The area values for the first and second analyses of each standard must be within 5% of their average. If this criterion cannot be met, then the sample values obtained using the first and second calibration curves should be averaged. In addition, if reporting such

average values for the samples is warranted, an additional analysis of the audit cylinder should be performed. The average of the audit values obtained using the two calibration curves should be reported.

5.1.1 *Commercial Gas Cylinder Mixtures* - Commercial gas cylinder mixtures can be used provided that the cylinders have been certified by direct analysis and the proper concentrations for the emission test can be obtained. Calibrate the GC using gas cylinders by the following procedure:

1. Secure the three cylinders near the GC and remove their protective caps. Attach an appropriate regulator that is equipped with a flow control valve to the lowest concentration standard.
2. For preliminary survey sample analysis, establish the proper GC conditions based on the referenced conditions in Table D in the Method Highlights Section, previous experience, or possibly, if the plant being tested has a laboratory, the laboratory personnel. For final sample analysis, establish the optimum GC conditions determined during the preliminary survey sample analysis.
3. Attach a quick connect or equivalent, compatible to the connection on the Tedlar bag or the interface sample line, to the gas sampling valve on the GC.
4. Connect a length of Teflon tubing to the flow control valve on the regulator and connect the other end, using a compatible connector, to the gas sample valve.
5. With the gas sampling valve in the load position and the flow control valve open, open the valve on the cylinder and adjust the pressure regulator to deliver a flow of 100cc/min through the sample loop, determined by a rotameter or other flow sensing device on the loop outlet.
6. Allow the sample loop to be flushed for 30 seconds, then turn off the flow control valve.
7. Allow the sample loop to return to the same pressure that will be experienced during sample analysis, determined with a manometer or equivalent connected to a tee on the outlet of the loop, and immediately switch the valve to the inject position.
8. Note the time of the injection on the strip chart recorder and/or actuate the electronic integrator. Also, record the standard concentration, detector attenuation factor, chart speed, sample loop temperature, column temperature and identity, and the carrier gas type and flow rate on the data form shown in Figure 5.1. It is also recommended that the same information be recorded directly on the chromatogram. Record the operating parameters for the particular detector being used.
9. After the analysis, determine the retention time of each standard component and determine the peak area. Repeat the injection of the first cylinder gas standard until the area counts from two consecutive injections are within 5 percent of their average.
10. Multiply the average area count of the consecutive injections by the attenuation factor to get the calibration area value for that standard concentration. **NOTE: Attenuation factors which affect the plot traced, but not the area count returned by an electronic integrator <u>should not</u> be multiplied by the average area count. Observe the effect of attenuation changes made at the console of a specific electronic integrator to determine the appropriate course of action.**

Analysis of Method 18 Field Samples

Date: 2/2/88 Analyst: J. Goodrich Plant: Rubber Chem Co.
Location: Plastic, NC Sample Type: Tedlar bags
Type of Calibration Standard: Liquid into Bags Target Compound: Perchloroethylene
Number of Standards: 3 Date Prepared: 2/2/88 Prepared By: A. Carver

GC Used: HP 5890 Column Used: Porapak T 6' x 1/8" SS
Carrier Gas Used: N_2 Carrier Gas Flow Rate: 30 ml/min
Column Temperatures, Initial: 50°C Program Rate: — Final: 50°C
Sample Loop Volume: 1 ml Loop Temperature: 120°C Inject. Port Temp.: N/A
Detector Temp.: 200°C Auxiliary Gases: H_2 15 psi ; Air 40 psi

Calibration Data	Standard 1	Standard 2	Standard 3
First analysis/second analysis			
Standard concentration (C_{act})	10.0	30.0	100
Flow rate through loop (ml/min)	200/200	200/200	200/200
Liquid injection volume (tubes)	NA/NA	NA/NA	NA/NA
Injection time (24-hr clock)	14:00		
Chart speed (cm/min)	10/10	10/10	10/10
Detector attenuation	2/2	2/2	2/2
Peak retention time (min)	2.83/2.82	2.82/2.84	2.83/2.82
Peak retention time range (min)	0.01	0.02	0.01
Peak area	218/208	614/628	/2103
Peak area x attenuation factor	436/416	1228/1256	/4206
Average peak area value (Y)	426	1242	4182
Percent deviation from average	2.3	1.1	0.6
Calculated concentration (C_{std})	10.2	29.7	100
% deviation from actual ($\%D_{act}$)	2.0	-1.0	0

Linear regression equation; slope (m): 41.80 y-intercept (b): -0.81

Sample Analysis Data	Sample 1	Sample 2	Sample 3
First analysis/second analysis			
Sample identification	RC-1	RC-2	RC-3
Interface dilution factor	NA	NA	NA
Flow rate through loop (ml/min)	200/200	200/200	200/200
Liquid injection volume (tubes)	NA/NA	NA/NA	NA/NA
Injection time (24-hr clock)	15:26/15:49	16:15/16:43	17:20/17:46
Chart speed (cm/min)	10/10	10/10	10/10
Detector attenuation	2/2	2/2	2/2
Peak retention time	2.82/2.83	2.81/2.83	2.80/2.80
Peak retention time range	0.01	0.02	0
Peak area	804/838	1066/1074	909/917
Peak area x atten. factor (A_1/A_2)	1608/1676	2132/2148	1818/1834
Average peak area value (Y)	1642	2140	1826
% deviation from average ($\%D_{avg}$)	2.1	0.4	0.4
Calculated concentration (C_s)	39.3	51.2	43.7

$$C_{std} \text{ or } C_s = \frac{(Y - b)}{m} \qquad \%D_{avg} = \left| \frac{A_1 - Y}{Y} \right| \times 100\% \qquad \%D_{act} = \frac{C_{std} - C_{act}}{C_{act}} \times 100\%$$

Figure 5.1. Data form for analysis of Method 18 field samples.

11. Repeat the procedure for the other standard concentrations, with the highest concentration analyzed last.
12. Prepare a plot with the standard concentration (C_s) along the abscissa (x-axis) versus the corresponding calibration area value along the ordinate (y-axis). Perform a regression analysis to calculate the slope and the y-intercept. Draw the least squares line on the plot.

5.1.2 *Preparation and Analysis of Gaseous Standards from High Concentration Cylinders* - Gaseous standards can be prepared from high concentration cylinder gases by dilution with hydrocarbon-free gas and collection of the diluted gas mixture in a Tedlar bag (10 liters or larger). A single-stage dilution system is used for dilutions up to about 20-fold. For greater dilutions, a two-stage dilution system should be used. It is recommended that a check of the dilution system be made by analyzing a low concentration cylinder standard that is in the range of one of the standards prepared by dilution. Prepare the gaseous standards, by the dilution technique, using the procedures that follow:

1. Assemble the single-stage dilution system, as shown in Figure 5.2 and/or the two-stage dilution system, as shown in Figure 5.3, using rotameters (flowmeters) calibrated following the procedures described in Subsection 2.1.3. (More precise dilutions may be possible if the dilution system utilizes mass flow controllers and mass flowmeters in place of the rotameters.)
2. Connect the primary flowmeters on the single-stage system to the calibration gas mixture and the diluent gas (hydrocarbon-free). On the two-stage system, connect the secondary flowmeters to the two diluent gas cylinders.
3. Connect a leakfree evacuated Tedlar bag fitted with a quick connect or equivalent, compatible to the connection on the actual sample bags or the interface sample line, to the tee connector on the single-stage system or following the second stage of the two-stage system.
4. Open the gas cylinders, adjust all the pressure regulators to the same pressure, and adjust the gas flows to achieve the desired dilution ratio using the flow control valves. On the two-stage system, adjust the needle valve on the high concentration waste outlet so that 90% of the high concentration gas is wasted and 10% goes to the second stage. **NOTE: Divert high concentration waste to a fume hood or pass it through an appropriate adsorption media to protect personnel from exposure to harmful concentrations of organic vapors.**
5. Take periodic readings of the pressure difference between the first and second stages of the two-stage system, as indicated by a water manometer or equivalent, to correct the flow reading from the first stage to the second stage. If the flow rates of the two stages can be balanced so that the pressures are equal, then no correction will be necessary.
6. Disconnect the Tedlar bag from the dilution system before the bag is totally full, and turn off the gases. Label the bag to indicate the contents, the time and data when it was prepared, the identity of the high concentration gas cylinder, and the dilution ratio(s) used.
7. Record the ambient temperature, the flow meter readings, the barometric pressure, and the average first stage pressure on the data form shown in Figure 5.4.
8. Calculate the concentration (C_s), in ppm_v, of the component in the final gas mixture by the following formulas for single-stage and two-stage dilution.

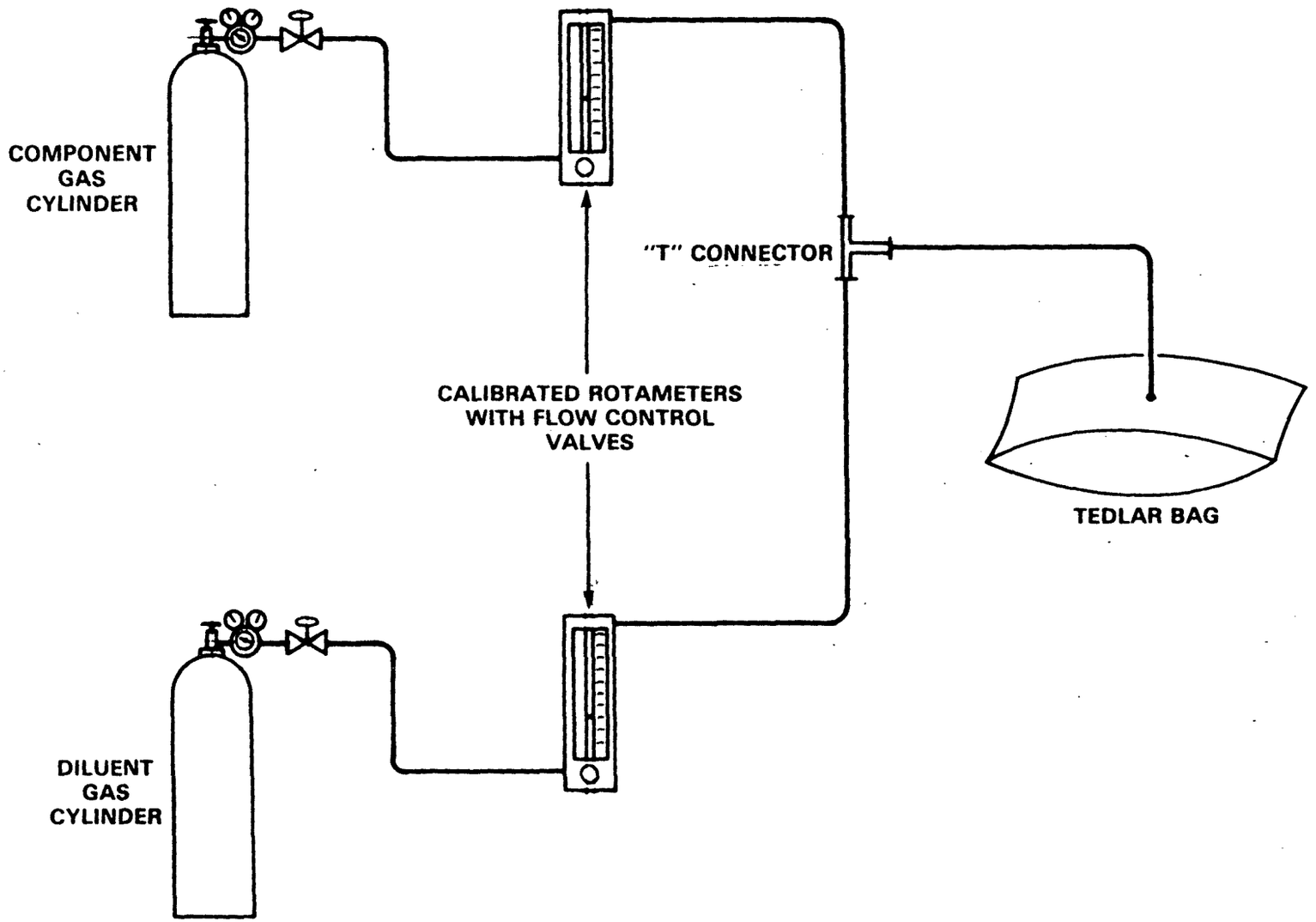

Figure 5.2. Single-stage calibration gas dilution system.

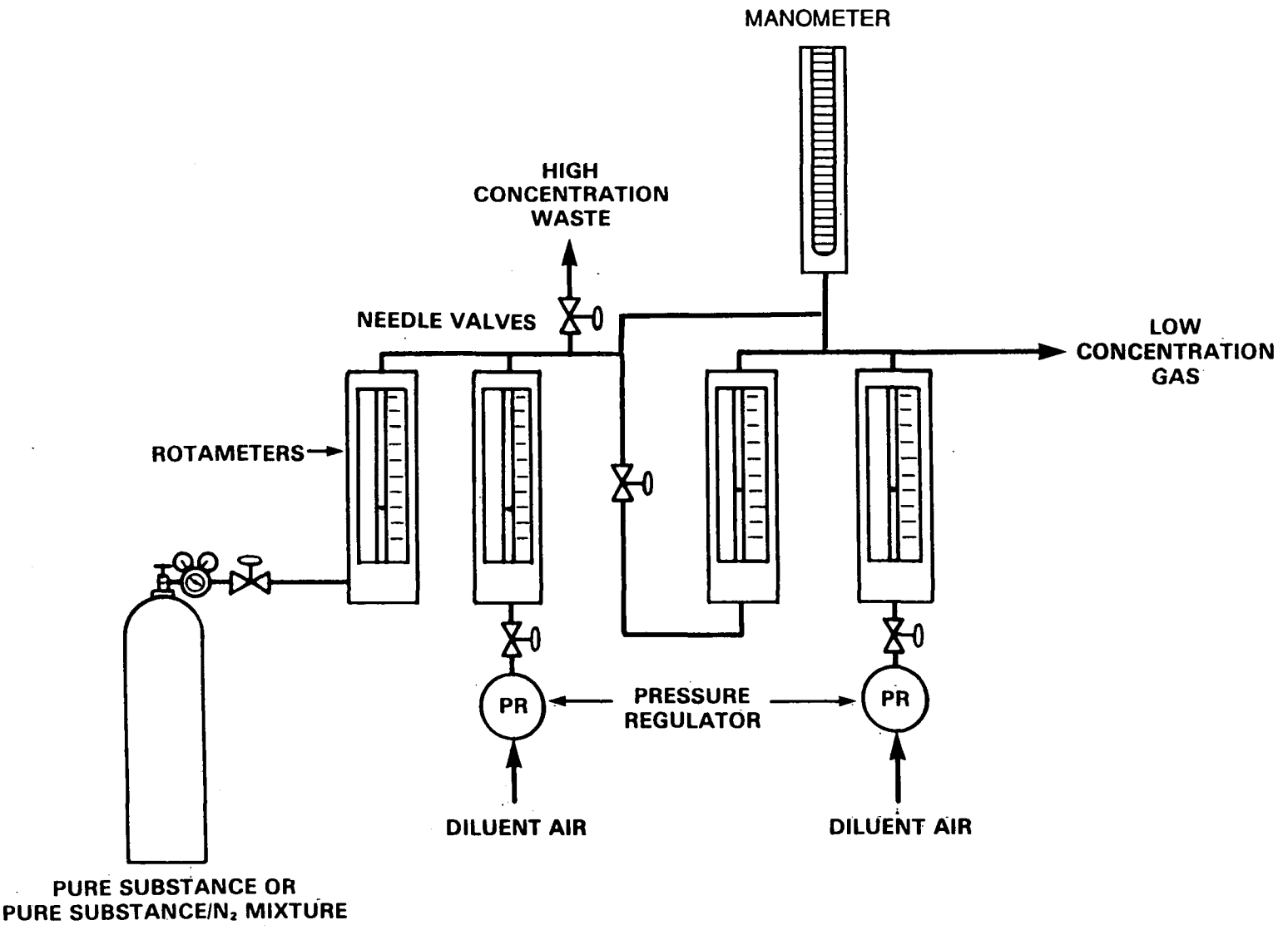

Figure 5.3. Two-stage calibration gas dilution system.

Preparation of Standards by Dilution of Gas Cylinder Standards

Date: 2/26/88 Preparer: J. Goodrich Purpose: Instrument check

Cylinder Component: Perchloroethylene Source: NBS-SRM
Component Concentration (X): 900 ppm_v Certification Date: 1/12/88

Stage 1	Mixture 1	Mixture 2	Mixture 3
Standard gas flowmeter reading	5	5	5
Diluent gas flowmeter reading	40	40	40
Laboratory temperature (°K)	293	293	293
Barometric pressure (P_b) (mm Hg)	760	760	760
Flow rate of cylinder gas (q_{c1}) at standard conditions (ml/min)	5	5	5
Flow rate of diluent gas (q_{d1}) at standard conditions (ml/min)	40	40	40
Calculated concentration (C_s)			100

$$C_s = \frac{(X \times q_{c1})}{q_{c1} + q_{d1}}$$

Stage 2 (if used)	Mixture 1	Mixture 2	Mixture 3
Standard gas flowmeter reading from stage 1	10	27	N/A
Diluent gas flowmeter reading into stage 2	90	63	
Average differential pressure (P_d) between stage 1 and 2 (mm H_2O)	0	0	
Flow rate of diluted gas ($q_{c2\ actual}$) at standard conditions to stage 2 (ml/min)	10	30	
Flow rate of diluted gas ($q_{c2\ corr}$) at corrected standard conditions to stage 2 (ml/min)	10	30	
Flow rate of diluent gas (q_{d2}) at standard conditions to stage 2 (ml/min)	90	60	
Calculated concentration (C_s)	10.0	30.0	

$$q_{c2\ corr} = q_{c2\ actual} \times \frac{P_d + P_b}{P_b}$$

$$C_s = X \times \frac{q_{c1}}{(q_{c1} + q_{d1})} \times \frac{q_{c2\ corr}}{(q_{c2\ corr} + q_{d2})}$$

Figure 5.4. Calibration standard preparation data form for diluted gas cylinders.

For single-stage dilution:

$$C_s = \frac{(X \times q_c)}{q_c + q_d} \qquad \text{Equation 5-1}$$

where

X = Mole or volume fraction of the organic in the calibration gas that was diluted, ppm_v,
q_c = Flow rate of the calibration gas that was diluted, and
q_d = Diluent gas flow rate.

For two-stage dilution:

$$q_{c2\ corr} = q_{c2\ actual} \times \frac{P_d + P_b}{P_b} \qquad \text{Equation 5-2}$$

where

$q_{c2\ corr}$ = Corrected flow rate from the first stage to the second stage,
$q_{c2\ actual}$ = Actual flow rate from the first stage to the second stage,
P_d = Average differential pressure between the first and second stage, mm or in. H_2O, and
P_b = Barometric pressure, mm or in. H_2O.

and

$$C_s = X \times \frac{q_{c1}}{(q_{c1} + q_{d1})} \times \frac{q_{c2\ corr}}{(q_{c2\ corr} + q_{d2})} \qquad \text{Equation 5-3}$$

where

X = Mole or volume fraction of the organic in the calibration gas that was diluted,
q_{c1} = Flow rate of the calibration gas diluted in the first stage,
q_{d1} = Flow rate of the diluent gas in the first stage, and
q_{d2} = Flow rate of the diluent gas in the second stage.

9. Prepare two more calibration standards from the high concentration cylinder gas sufficient to bracket the expected concentration in the source samples.
10. Analyze the calibration standards following the procedures described in Subsection 5.1.1 for commercial gas cylinder mixtures. Use a pump on the outlet side of the sample loop to flush the standards through the loop at 100 cc/min for 30 seconds. Using a manometer connected to a tee on the outlet of the sample loop, make certain that the sample loop pressure during analysis of the calibration standards is equal to the loop pressure during actual sample analysis.
11. Once the calibration curve is established, it is recommended, if available, that an undiluted cylinder standard in the range of the standard curve be analyzed to verify the dilution ratio. Analyze the cylinder and calculate the sample area value by multiplying the peak area by the attenuation

factor. Use the slope and the y-intercept derived from the linear regression equation and the sample area value to calculate the cylinder concentration (C_s) by the following formula:

$$C_s = \frac{Y - b}{S} \qquad \text{Equation 5-4}$$

where

Y = Sample peak area, area counts,
b = y-intercept of the calibration curve, area counts, and
S = Slope of the calibration curve, area counts/ppm_v.

The calculated concentration of the undiluted cylinder standard, based on the analysis and the calibration curve generated from the diluted standards, should be within 10% of the true value of the undiluted cylinder. If this criteria cannot be met, then the GC calibration should be checked, the diluted sample may be outside the calibration range, or there is a problem with the dilution system used to prepare the standards (e.g. the rotameters are out of calibration, etc.). Identify the problem and correct it, or use one of the other approaches for preparing calibration standards.

5.1.3 *Preparation of Calibration Standards by Direct Gas Injection* - This procedure is applicable to organic compounds that exist entirely as a gas at ambient conditions. The standards are prepared by direct injection of a known quantity of a "pure" gas standard into a 10-liter Tedlar bag containing 5.0 liters of hydrocarbon-free air or nitrogen. If there is more than one target compound then multiple component standards can be prepared by this method provided the relative elution pattern for the compounds is known for the GC column being used. The following procedures are used to prepare standards by direct gas injection:

1. Evacuate a previously leak checked, leakfree 10-liter Tedlar bag (also checked for zero retention) equipped with a quick connect or equivalent compatible to the connection on the Tedlar bag or the interface sample line and preferably fitted with a septum-capped tee at the bag inlet (see Figure 5.5).
2. Fit a septum to the outlet of the gas cylinder containing the standard component.
3. Meter 5.0 liters of hydrocarbon-free air or nitrogen into the bag at a rate of 0.5 liter/min using a dry gas meter that has been calibrated in a manner consistent with the procedure described in Subsection 2.1.2. At the start, record dry gas meter pressure and temperature.
4. While the bag is filling, fill and purge a 0.5-ml gas-tight syringe with the standard gas by withdrawing the gas from the cylinder through the septum. Repeat the fill and purge of the syringe seven times before finally filling the syringe and capping the needle with a GC septum. Allow the syringe temperature to equilibrate with the ambient temperature.
5. Immediately before injecting the gas into the bag through the septum, remove the septum cap, and adjust the syringe to the desired volume by expelling the excess gas. The syringe should now be at ambient pressure. Inject the gas into the bag through the septum (through the side of the bag if it has not been fitted with a septum), withdraw the syringe, and immediately cover any resulting hole with a piece of masking tape or the equivalent.

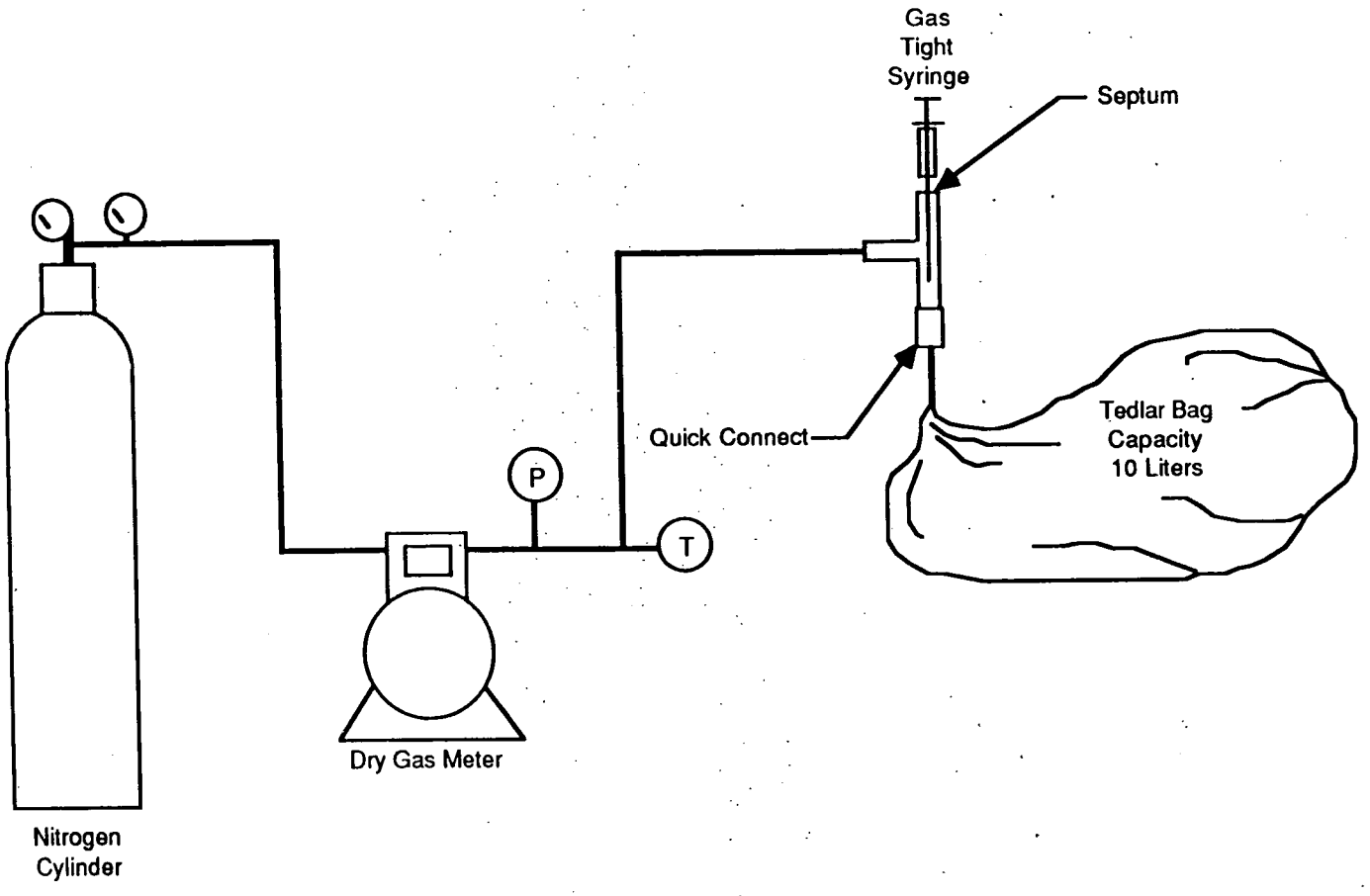

Figure 5.5. Apparatus for preparation of calibration standards by direct gas injection.

6. Record the final dry gas meter temperature and pressure, turn off the dilution gas, and disconnect the Tedlar bag; record the ambient temperature and pressure on a data form such as the one shown in Figure 5.6.
7. Place the bag on a smooth surface, and alternatively depress opposite sides of the bag 50 times to mix the gases in the bag.
8. Calculate the organic standard concentration in the bag (C_s) in ppm_v using the following formula.

$$C_s = \frac{G_v \times 10^6 \times \dfrac{293 \times P_s}{T_s \times 760}}{V_m \times Y \times \dfrac{293 \times P_m}{T_m \times 760} \times 10^3} = \frac{G_v \times 10^3 \times \dfrac{P_s \times T_m}{T_s \times P_m}}{V_m \times Y} \qquad \text{Equation 5-5}$$

where

G_v = Gas volume of organic compound injected into the Tedlar bag, ml,
10^6 = Conversion to ppm_v, ul/liter,
P_s = Absolute pressure of syringe before injection, mm Hg,
T_s = Absolute temperature of the syringe before injection, °K,
V_m = Gas volume indicated by dry gas meter, liters,
Y = Dry gas meter correction factor, dimensionless,
P_m = Average absolute pressure of the dry gas meter, mm Hg,
T_m = Average absolute temperature of dry gas meter, °K, and
10^3 = Conversion factor, ml/L.

Note: The syringe pressure and absolute temperature should equal the barometric pressure and the absolute ambient temperature.

9. Prepare two more calibration standards sufficient to bracket the expected concentration in the source samples.
10. Analyze the calibration standards following the procedures described in Subsection 5.1.1 for commercial gas cylinder mixtures. Use a pump on the outlet side of the sample loop to flush the standards through the loop at 100 cc/min for 30 seconds. Using a manometer connected to a tee on the outlet of the sample loop, make certain that the sample loop pressure during analysis of the calibration standards is equal to the loop pressure during actual sample analysis.

5.1.4 *Preparation of Calibration Standards by Liquid Injection* - This procedure is used to prepare gaseous standards in Tedlar bags from liquid organic compounds. The liquid compounds used must be 99.9% mole pure or the purity must be known to calculate the gaseous standard concentrations. If there is more than one target compound, then multiple component standards can be prepared by this method provided the relative elution pattern for the compounds is known for the GC column being used. Use the procedure that follows to prepare standards by this technique.

1. Assemble the equipment shown in Figure 5.7 using a dry gas meter calibrated following the procedure described in Subsection 2.1.2 and a water manometer for the pressure gauge. All connections should be glass, Teflon, brass or stainless steel with quick connects or equivalent, compatible to the con-

Preparation of Standards in Tedlar Bags by Gas and Liquid Injection

Date: 2/26/88 Preparer: J. Goodrich Purpose: Calibration during field test

Organic Compound: Perchloroethylene Gas: ____ or Liquid: ✓
Compound Source: Fisher Compound Purity (P): 99+% Compound Mole Weight (M): 165.83

Gas Injection	Mixture 1	Mixture 2	Mixture 3
Bag number or identification	N/A	N/A	N/A
Dry gas meter calibration factor (Y)			
Final gas meter reading, liters			
Initial gas meter reading, liters			
Volume metered (V_m), liters			
Ambient temperature, °C			
Average gas meter temperature, °C			
Absolute gas meter temp. (T_m), °K			
Barometric pressure (P_b), mm Hg			
Average gas meter pressure, mm Hg			
Absolute gas meter press. (P_m), mm Hg			
Gas volume injected (G_v), ml			
Syringe temperature (T_s), °K			
Absolute syringe pressure (P_s), mm Hg			
Calculated concentration (C_s)			

$$C_s = = \frac{G_v \times 10^3 \times \frac{P_s \times T_m}{T_s \times P_m}}{V_m \times Y}$$

$$C_{s\ corr.} = \frac{C_{s\ calc.}}{P} \times 100\%$$

Liquid Injection	Mixture 1	Mixture 2	Mixture 3
Bag number or identification	S-1	S-2	S-3
Dry gas meter calibration factor (Y)	0.9430	0.9430	0.9430
Final gas meter reading liters	31.90	38.90	74.52
Initial gas meter reading, liters	14.62	31.90	38.90
Volume metered (V_m), liters	17.28	7.00	35.62
Average gas meter temperature, °C	28	28	28
Absolute gas meter temp. (T_m), °K	301	301	303
Barometric pressure (P_b), mm Hg	758.4	758.4	758.4
Average gas meter pressure, mm Hg	1.5	1.4	1.9
Absolute gas meter press. (P_m), mm Hg	759.9	759.8	760.3
Liquid organic density (p), ug/ml	1.623	1.623	1.623
Liquid volume injected (L_v), ul	2.00	2.00	2.00
Calculated concentration (C_s)	29.7	73.4	14.5

$$C_s = 6.24 \times 10^4 \times \frac{L_v \times p \times T_m}{M \times V_m \times Y \times P_m}$$

$$C_{s\ corr.} = \frac{C_{s\ calc.}}{P} \times 100\%$$

Figure 5.6. Calibration data form for preparation of standards in Tedlar bags by gas and liquid injection.

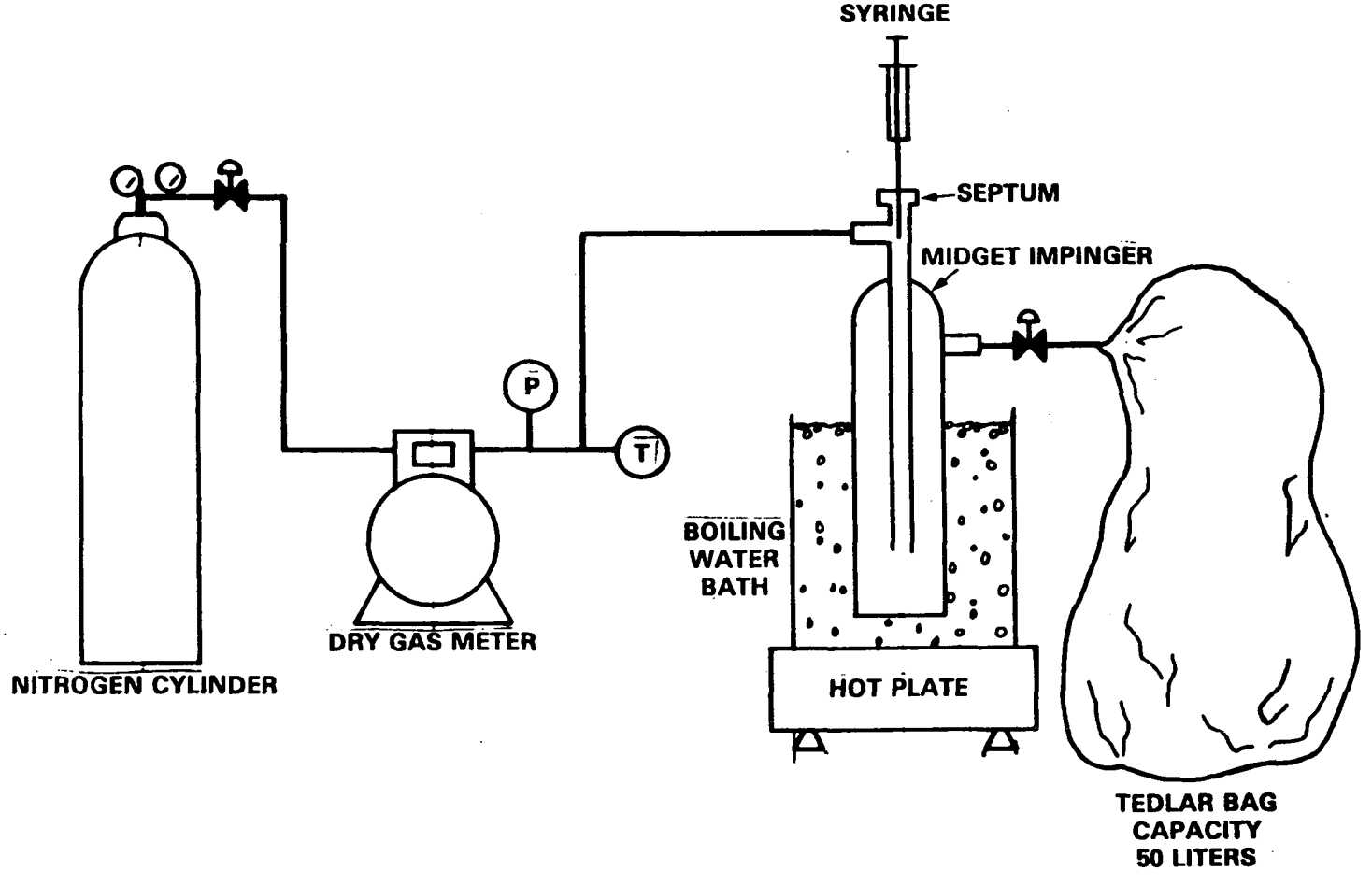

Figure 5.7. Apparatus for preparation of calibration standards by liquid injection.

nection on the Tedlar bag or the interface sample line, for connection to the Tedlar bag.

2. Allow the liquid organic compound to come to ambient temperature, and determine the density of the liquid by weighing the liquid in a tare-weighed ground-glass stoppered 25-ml volumetric flask or ground-glass stoppered specific gravity bottle. Calculate the density in terms of g/ml. As an alternative, use a literature value of the density of the liquid at 20 °C.
3. Leak check the system by pressurizing it to 5 to 10 cm (2 to 4 in.) H_2O and shutting off the diluent gas supply. The system is leakfree if there is no change in the pressure after 30 seconds. If the leak check is good, release the pressure. If the system fails the leak check, locate the leak using a soap solution and repair the leak.
4. Connect a quick connect or equivalent, compatible to the connection on the Tedlar bag or the interface sample line, to a leakfree uncontaminated 50-liter Tedlar bag. Evacuate the bag.
5. Turn on the hot plate and bring the water to a boil.
6. Connect the bag to the impinger outlet.
7. Record the initial meter reading and temperature. Open the diluent supply valve, and adjust the flow rate to about 3 liters/minute so that the bag will fill in about 15 minutes. Record the meter pressure and temperature and the barometric pressure at the start on a form such as the one shown in Figure 5.5.
8. Use a clean 1.0- or 10-microliter syringe with a needle of sufficient length to inject the liquid below the air inlet branch of the tee on the midget impinger.
9. Fill the syringe to the desired volume with the organic liquid, and inject the liquid by inserting the needle through the septum until the needle is below the air inlet. Depress the syringe plunger completely over a period of about 10 seconds and withdraw the needle. **NOTE: When dispensing liquid from a syringe, take care to account for the volume of liquid present in the syringe needle. In general, the potential error resulting from the volume of the needle is most conveniently avoided by ensuring that the needle volume is completely full of liquid upon filling the syringe and dispensing from it. If air pockets exist in the syringe after filling, this will be almost impossible.**
10. When the bag is almost filled, record the water manometer pressure. Turn off the diluent gas supply, and disconnect the bag. To equilibrate the contents in the bag, either set the bag aside for an hour or massage the bag by alternately depressing opposite sides of the bag 50 times.
11. Record the final meter reading and temperature. Calculate the concentration of the calibration standard (C_s) in the bag in ppm_v using the following formula.

$$C_s = \frac{\frac{L_v}{M} \times p \times 24.055 \times 10^6}{V_m \times Y \times \frac{293 \times P_m}{T_m \times 760} \times 10^3} = 6.24 \times 10^4 \times \frac{L_v \times p \times T_m}{M \times V_m \times Y \times P_m} \qquad \text{Equation 5-6}$$

where

V_m = Gas volume indicated by dry gas meter, liters,
L_v = Volume of liquid organic injected, μl,
M = Molecular weight of the organic compound, g/g-mole,
ρ = Organic liquid density, g/ml,
24.055 = Ideal molar gas volume at 293 °K and 760 mm Hg, liters/g-mole,
10^6 = Conversion to ppm_v, μl/liter,
10^3 = Conversion factor, μl/ml, and
Y = Conversion factor for dry gas meter.

12. When using a liquid standard that is not 99.9% pure, use the following formula to correct the calculated concentration of the calibration standard ($C_{s\ corr}$) in ppm_v.

$$C_{s\ corr} = \frac{C_{s\ calc}}{100\%} \times P \qquad \text{Equation 5-7}$$

where

$C_{s\ corr}$ = Corrected calibration standard concentration, ppm_v,
$C_{s\ calc}$ = Calculated calibration standard concentration (C_s), ppm_v, and
P = Purity of liquid organic compound, percent.

13. Prepare two more calibration standards sufficient to bracket the expected concentration in the source samples.
14. Analyze the calibration standards following the procedures described in Subsection 5.1.1 for commercial gas cylinder mixtures. Use a pump on the outlet side of the sample loop to flush the standards through the loop at 100 cc/min for 30 seconds. Make certain that the sample loop pressure during analysis of the calibration standards is equal to the loop pressure during actual sample analysis.

An alternative procedure, subject to the approval of the Administrator, for preparing gaseous standards from liquid organics substitutes a heated GC injection port for the midget impinger setup and, due to the high back pressure of the injection port, a calibrated mass flowmeter for the dry gas meter.

5.1.5 *Development of Relative Response Factors and Relative Retention Factors*- For emission tests where on-site GC analysis involving more than one organic compound will be conducted, the development and use of relative response factors and relative retention times is recommended. In the laboratory, gaseous calibration standards are prepared for each target organic compound and analyzed by one of the techniques described in the previous subsections. Choose one of the target compounds or prepare and generate another calibration curve for a different organic compound to be used to calculate the relative response factors and retention times. The compound selected should exhibit a retention time comparable to the other target compounds, should be stable, and/or easy to prepare and use in the field. This procedure must be verified in the laboratory prior to field testing.

The relative response factors are calculated by dividing the slopes of the target compound calibration curve by the slope of the selected organic calibration curve. The y-intercept from the regression equation is ignored in calculating the relative response factors. It should be noted that a very large y-intercept

(greater than 5% of the slope) for any compound may adversely affect the validity of this calibration technique. During analysis of field samples, the selected organic compound can be used to calibrate the GC detector response and column performance. The response factor determined in the field for the selected organic is used to calculate the field response factors for the other target compounds using the relative response factors determined previously in the laboratory. The same approach is used to predict the retention times of target compounds in the field using the selected compound retention time determined in the field and the relative retention times for the target compounds determined in the laboratory. Use the following procedures to develop relative response factors and relative retention times.

1. Generate, at the minimum, a three-point calibration curve for each target organic compound using gaseous standards following the procedures described in the preceding subsections. Record the retention time of each compound.
2. Select one of the target compounds, preferably with a retention time between the other target compounds, or generate another calibration curve, with a minimum of three points, for a non-target organic compound with a comparable retention time. Select the standard compound to be used in the field based primarily on the ease of use. Determine the retention time of the selected compound (if not already determined). Measure the carrier gas flow rate using a bubble-type flowmeter or other suitable flowmeter.
3. Inject a sample of the diluent gas, and determine the retention time of the unretained diluent peak. This is needed to calculate the relative retention by the following formula:

$$r_{x/s} = \frac{(t_{Rxi} - t_{Mi})}{(t_{Rsi} - t_{Mi})} \qquad \text{Equation 5-8}$$

where

$r_{x/s}$ = Relative retention time based on adjusted retention volumes of the target compounds and the selected compound, cc/cc,
t_{Rxi} = Initial retention time of compound x, seconds,
t_{Mi} = Initial retention time of unretained diluent gas peak, seconds, and
t_{Rsi} = Initial retention time of selected organic compound, seconds.

4. Calculate the relative response factor for each target compound relative to the compound selected in step 2 using the following formula.

$$F_{Rx} = \frac{m_s}{m_x} \qquad \text{Equation 5-9}$$

where

F_{Rx} = Relative response factor for compound x, dimensionless,
m_s = Slope from the calibration curve regression equation for the selected organic compound, area counts/ppm_v, and
m_x = Slope from the calibration curve regression equation for compound x, area counts/ppm_v.

5. To verify that the relative response factors are correct, simulate the transportation of the GC to the field by turning off the detector, the GC oven and the carrier gas flow overnight or longer. After the simulated period has elapsed, turn on the GC, the carrier gas, and the detector, and establish the analytical conditions that were used to generate the relative response factors. Measure the carrier gas flow rate.
6. Recalibrate the GC by generating a three-point calibration curve using the selected organic compound, analyze each of the target compound calibration standards, and a diluent gas sample. Calculate the concentration of each target compound using the relative response factor for the compound and the slope from the new calibration curve determined for the selected organic compound with the following formula.

$$C_x = \frac{Y_x}{m_{std}} \times F_{Rx} \qquad \text{Equation 5-10}$$

where

C_x = Calculated concentration of compound x calibration standard, ppm_v,
Y_x = Detector response for compound x calibration standard, area counts,
m_{std} = Slope from new calibration curve generated for selected organic standard compound, area counts/ppm_v, and
F_{Rx} = Relative response factor for compound x, dimensionless.

The calculated value for each target compound using the compound's relative response factor must be within 5% of the actual standard concentration for this technique to be used for that compound.

7. Determine the predicted retention times for the target compounds using their relative retention times and the retention time determined for the selected organic compound using the following formula:

$$r_{Txf} = ((r_{Tsf} - t_{Mf}) \times r_{x/s}) + t_{Mf} \qquad \text{Equation 5-11}$$

where

r_{Txf} = Calculated retention time for compound x using the relative retention time factor, seconds,
r_{Tsf} = Measured retention for selected organic compound during second analysis, seconds, and
t_{Mf} = Measured retention time of unretained diluent gas peak during second analysis, seconds.

The calculated retention time for the target compounds should agree within one second or 2%, whichever is greater, of the actual retention time seen for the target compounds during the second analysis.

8. Record all data on a form such as the one shown in Figure 5.8.

5.1.6 *Calibration Standards for Adsorption Tube Samples* - The calibration standards necessary for the analysis of adsorption tube samples differ from the standards described in the previous subsections in that the adsorption tube standards are liquid rather than gaseous. The liquid standards can be prepared directly in the desorption solvent following the procedures described in the methods referenced in Table F or, subject to the approval of the Administrator, on blank adsorp-

Development of Relative Response Factors and Relative Retention Factors

Date: 2/26/88 Preparer: J. Goodrich Purpose: Use commercially available mixes
Target Compound: Perchloroethylene Type of Standard: Liquid in Bag
Surrogate Compound: Isobutene Type of Standard: Gas Cylinder

Target Compound Calibration Data	Standard 1	Standard 2	Standard 3
First analysis/verify analysis			
Standard concentration	9.85 ppm	51.7	
Flow rate through loop (ml/min)	200/200	200/200	200/200
Liquid injection volume (tubes)	NA/NA	NA/NA	NA/NA
Injection time (24-hr clock)	14:00/14:31	15:03/15:40	14:18/14:56
Chart speed	10 cm/min/10	10/10	10/10
Detector attenuation	2/2	2/2	2/2
Peak retention time (t_{Rxi}/t_{Rxf})	2.43/2.45	2.44/2.45	2.44/2.42
Peak retention time range	0.02	0.03	0.02
Peak area	373/346	1912/1963	3652/3666
Peak area x atten. factor (Y_i/Y_x)	746/692	3824/3924	7304/7332
Verification analysis conc. (C_x)	9.24	52.4	97.1
Percent deviation from actual	-6.2%	+1.4	-1.4
Calculated retention time (r_{Txf})	2.42	2.42	2.42
Percent deviation from actual	-0.6%	0.6%	0.6%

Linear regression equation; slope (m_x): 73.98 y-intercept (b): 10.96

Surrogate Calibration Data	Standard 1	Standard 2	Standard 3
First analysis/second analysis			
Standard concentration	10.0 ppm	30.0 ppm	100 ppm
Flow rate through loop (ml/min)	200/200	200/200	200/200
Liquid injection volume (tubes)	NA/NA	NA/NA	NA/NA
Injection time (24-hr clock)	14:01/14:26	14:59/15:12	15:47/16:09
Chart speed	10 cm/min/10	10/10	10/10
Detector attenuation	1/1	1/1	2/2
Peak retention time (t_{Rsi}/t_{Rsf})	3.26/3.28	3.27/3.28	3.27/3.26
Peak retention time range	0.02	0.01	0.01
Peak area	963/969	2766/2794	4716/4752
Peak area x attenuation factor	963/969	2766/2794	9432/9504

Linear regression equation; slope (m_s): 94.39 (m_f): 95.10 y-intercept (b): -18.09

Nonretained peak retention time (t_{Mi}/t_{Mf}): 0.41 / 0.43

Relative Response Factor (F_{Rx}): 1.27 Relative Retention Factor ($r_{x/s}$): 0.7

$$F_{Rx} = \frac{m_s}{m_x} \qquad r_{x/s} = \frac{(t_{Rxi} - t_{Mi})}{(t_{Rsi} - t_{Mi})} \qquad C_x = \frac{Y_x}{m_{std}} \times F_{Rx}$$

$$r_{Txf} = ((r_{Tsf} - t_{Mf}) \times r_{x/s}) + t_{Mf}$$

Figure 5.8. Data form for development of relative response and relative retention factors.

tion tubes and then desorbed. Both methods require similar preparation and analysis of standards and desorption efficiency samples, but the way the calibration curve is generated is different.

For calibration standards prepared directly in the desorption solvent, the standards are used to generate the calibration curve, and the desorption efficiency is determined separately. The calculated desorption efficiency is then used to correct the analytical results for the emission test samples. The disadvantage of this method is that the desorption efficiency may not be constant for each level. This can result from a constant amount of analyte being retained by the adsorbent, instead of an amount proportional to the total amount of analyte on the adsorbent. When using the desorption efficiency to correct each analytical result, the analyst must use the desorption efficiency determined for the concentration level closest to that of the sample.

For calibration standards prepared on absorbent material, the desorbed solutions are used to generate the calibration curve. By this procedure, the desorption efficiency is already taken into account when calculating the organic compound catch of the adsorption tube samples. Liquid calibration standards must also be prepared to calibrate the GC to determine if the desorption efficiency is greater than 50%. The advantage of this method is that both level-dependent or absolute amounts of organic compounds not desorbed from the adsorbent are automatically taken into consideration.

For maximum accuracy, preparation of standards directly in the desorption liquid or on adsorbent will require the preparation of a relatively large volume of a high concentration working standard from which the calibration standards are prepared. The working standard should be 100 times more concentrated than the highest concentration calibration standard. Three levels of calibration standards should be prepared to bracket the expected concentration of the liquid resulting from desorption of actual samples. The concentration of the sample desorption liquid will depend on the catch weight of the target organic compound(s) and the amount of desorption liquid used (1.0 ml per 100 mg of adsorbent material). The catch weight will in turn depend on the sample volume of flue or duct gas drawn through the tubes and the concentration of the emission source. Use the following formula to estimate the concentration (C_s), in ug/ml, of the midrange liquid standard that will be approximately equal to the actual samples:

$$C_s = \frac{V_{pred} \times C_c \times M}{24.055 \times L_d} \qquad \text{Equation 5-12}$$

where

V_{pred} = Predicted gas sample volume, liters,
C_c = Concentration of the organic compound at the source, ppm_v (ug-moles/g-mole),
M = Molecular weight of organic compound, ug/ug-mole,
24.055 = Ideal molar gas volume at 293 °K and 760 mm Hg, liters/g-mole, and
L_d = Volume of desorption liquid, ml.

The preliminary survey sample results should be used to calculate the required calibration standard concentrations.

To prepare adsorption tube standards, use the procedure described in the referenced method or the alternative procedure, subject to the prior approval of the Administrator. Regardless of which type of calibration standard is selected, use the following procedures to prepare the standards:

1. Prepare a working standard for each organic compound by weighing each compound into an individual tare-weighed ground-glass stoppered 250-ml volumetric flask. Dissolve the compound in the proper desorption solvent specified by the referenced method in Table E of the Method Highlights Section. Dilute the solution to volume. Refrigerate the working standard when not being used.
2. Using a clean microliter syringe, transfer the required amount of working standard to a vial equipped with a Teflon-lined septum top, and add sufficient desorption solvent to achieve a final volume equal to the volume of desorption solvent required for actual samples. Cap the vial with the top, shake the vial to mix the contents. **NOTE: When dispensing liquid from a syringe, take care to account for the volume of liquid present in the syringe needle. In general, the potential error resulting from the volume of the needle is most conveniently avoided by ensuring that the needle volume is completely full of liquid upon filling the syringe and dispensing from it. If air pockets exist in the syringe after filling, this will be almost impossible.**
3. Establish the optimum GC conditions determined during the analysis of the preliminary survey samples.
4. Select a suitably sized injection syringe (5- or 10-ul), and flush the syringe with acetone (or some other suitable solvent if acetone is the standard component) to clean the syringe.
5. Flush the syringe with standard solution by withdrawing a syringe full of the solution from the septum vial, and dispensing the solution into a beaker containing charcoal adsorbent.
6. Refill the syringe with standard solution, withdraw the syringe from the vial, and wipe the syringe needle with a laboratory tissue.
7. Adjust the syringe volume down to the desired amount (see NOTE under Step 2), and inject into the GC. Note the time of the injection on the strip chart recorder and/or actuate the electronic integrator. Also, record the standard concentration, detector attenuation factor, chart speed, injection port temperature, column temperature and identity, and the carrier gas type and flow rate on the form shown in Figure 5.9. It is also recommended that the same information be recorded directly on the chromatogram. Record the operating parameters for the particular detector being used.
8. After the analysis, determine the retention time of the standard component and determine the peak area. Repeat the injection of the first liquid standard until the area count from two consecutive injections yield area counts within 5 percent of their average.
9. Multiply the average area count of the consecutive injections by the attenuation factor to get the calibration area value for that standard concentration.
10. Repeat the procedure for the other standard concentrations.
11. Prepare a plot with the standard concentration (C_s) along the abscissa (x-axis) versus the corresponding calibration area values along the ordinate (y-axis). Perform a regression analysis to calculate the slope and the y-intercept. Draw the least squares line on the plot.

To determine the desorption efficiency for the target organic compound(s) requires spiking the target organic compound(s) onto the absorbent material and desorbing the compound(s) using the same procedures that will be used for actual samples; the desorption solution is then analyzed. The spikes should be prepared at three levels in the range of the source samples. The following procedures are used to determine the desorption efficiency:

1. Place an amount of adsorbent material equivalent to the amount used for actual tube samples in a vial with a Teflon-lined septum cap. Prepare ten vials (three sets of triplicates and one blank).
2. Using a clean microliter syringe, aliquot from the working standard solution, in triplicate into each set of vials, an amount of spike equal to each level of calibration standard.
3. Cap each vial immediately after spiking, and allow the vials to sit undisturbed for the 30 minutes.
4. To desorb the spiked organic compound(s), dispense the appropriate volume of desorbent solvent and treat the vials as specified by the referenced method (Table E). Prepare a blank vial containing adsorbent and desorption solvent only.
5. Analyze the desorption solutions following steps 4 through 8 used above for the calibration standards. Record the data on the form shown in Figure 5.9.
6. Multiply the average area count of the consecutive injections by the attenuation factor to get the area value for that sample. **NOTE: Attenuation factors which affect the plot traced, but not the area count returned by an electronic integrator <u>should not</u> be multiplied by the average area count. Observe the effect of attenuation changes made at the console of a specific electronic integrator to determine the appropriate course of action.**
7. If the desorption solutions are to be used to generate the calibration curve, then plot the expected standard solution concentrations on the abscissa (x-axis) and corresponding area value on the ordinate (y-axis). Perform a regression analysis and draw the least squares line on the plot. **NOTE: If the desorption efficiencies of the selected solvent vary with concentration for any of the organics to be analyzed, the relationship between the expected standard solution concentrations and the corresponding area value will not be strictly linear. Evaluate the linearity of the resulting plot using control samples, and obtain the prior approval of the Administrator before utilizing a least squares line generated from such data.**
8. Calculate the desorption efficiency (DE), in percent, for each level of spike using the calibration area for the corresponding standard prepared directly in the desorption solvent using the following formula:

$$DE = \frac{A_s - A_b}{A_c} \times 100\% \qquad \text{Equation 5-13}$$

where

A_s = Average area value for desorption carried out at given concentration level, area counts,
A_d = Average area value for desorption carried out on blank sample, area counts, and
A_c = Average calibration area value for the corresponding standard level prepared directly in the desorption solvent, area counts.

The desorption efficiency achieved at each level must be greater than 50% for the adsorption tube sampling and analytical method to be acceptable. If adsorption tubes have become the only remaining sampling option, and the 50% criteria cannot

Preparation of Liquid Standards and Desorption Efficiency Samples

Date: 2/23/88 Preparer: J. Goodrich Purpose: Instrument / DE Check

Organic Compound: Perchloroethylene Gas: ____ or Liquid: ✓
Compound Source: Fisher Compound Purity (P): 99+ % Compound Mole Weight (M): 165.83
Adsorbent Material: Activated carbon Batch No: 120 Desorption Solvent: CH_2Cl_2

Standards in Solvent	Mixture 1	Mixture 2	Mixture 3
Desorption solvent volume (V_s), ml	4.00	4.00	4.00
Compound spike amount (V_o), ul	4.00	8.00	12.00
Organic compound density (p), ug/ul	1.623	1.623	1.623
Standard concentration (C_s), ug/ml	1.62	3.25	6.49

Standards on Adsorbent	Mixture 1	Mixture 2	Mixture 3	Blank
Adsorbent amount, g	0.800	0.800	0.800	0.800
Compound spike amount (V_o), ul	4.00	8.00	12.00	0
Organic compound density (p), ug/ul	1.623	1.623	1.623	1.623
Desorption solvent volume (V_s), ml	4.00	4.00	4.00	4.00
Desorption time, min.	30	30	30	30
Standard concentration (C_s), ug/ml	1.62	3.25	6.49	0

GC Operating Conditions	
Injection port temperature, °C	150
Carrier gas flow rate, ml/min	15
Column temperature:	
Initial, °C	70 (3 min)
Program rate, °C/min	30
Final, °C	100 (3 min)

Chromatographic Results	Mixture 1	Mixture 2	Mixture 3	Blank
Injection time, 24-hr clock	14:26	15:04	15:57	16:40
Distance to peak, cm	47.6	47.3	47.3	47.4
Chart speed, cm/min	10	10	10	10
Retention time, min	4.76	4.73	4.73	4.74
Attenuation factor	2	2	2	2
Standards in desorption solvent:				
Peak area (A_c), area counts	303	701	1090	0
Standards and blank from adsorbent material:				
Peak area (A_s and A_b), area counts	251	544	837	0

Desorption Efficiency Calculation	Mixture 1	Mixture 2	Mixture 3
Desorption Efficiency (DE), %	82.8	77.6	76.8

$$C_s = \frac{V_o \times p \times P}{V_s \times 100\%} \qquad DE = \frac{A_s - A_b}{A_c} \times 100\%$$

Figure 5.9. Data form for preparation of liquid standards and desorption efficiency samples for adsorption tube analysis.

be met, then, subject to the prior approval of the Administrator, explore more vigorous desorption techniques such as longer desorption times, sonification of the vials during desorption, and/or other desorption solvents.

5.2 Audit Sample Analysis

After analysis of the calibration standards, and generation of a calibration curve, conduct the analysis of the audit cylinder(s). Audit samples should be introduced into the GC by the same procedure used for the calibration standards. If possible, the audit sample should be introduced into the probe for the direct and dilution interface techniques. The audit sample analysis must agree within 10% of the actual concentration of the audit sample before sample analysis can begin. If the audit criteria is not met, first try recalibrating the GC with the existing standards, and then reanalyze the audit sample(s). If the 10% criteria still cannot be met, remake the standards, recalibrate the GC, and reanalyze the audit sample until the criteria is met or a representative of the Administrator decides differently.

5.3 Sample Analysis

After the GC has been calibrated and the analysis of the audit sample(s) has been conducted successfully, the samples can be analyzed. Use the same procedures for sample analysis that were used to analyze the calibration standards. Record the GC conditions and the analytical data on the form provided in Figure 5.1. The following subsections describe the procedures for analyzing Tedlar bag samples, direct and dilution interface samples, adsorption tube samples, and heated syringe samples.

5.3.1 *Analysis of Bag Samples* - The following procedures are to be used to analyze emission samples collected in Tedlar bags using a GC calibrated with gaseous calibration standards prepared following one or more of the procedures described in Subsection 5.1.

1. Attach a quick connect, or similar connecting device that is compatible with the connection on the Tedlar bag to the gas sampling valve on the GC. Attach a manometer connected to a tee on the outlet of the sample loop.
2. With the gas sampling valve in the load position, attach the first Tedlar bag sample to the valve. Use a pump on the outlet side of the sample loop to flush the sample through the loop at 100 cc/min for 30 seconds.
3. Turn off the pump, allow the sample loop to return to the same pressure used during calibration standard analysis, and immediately switch the valve to the inject position.
4. Note the time of the injection on the strip chart recorder and/or actuate the electronic integrator. Also, record the sample identity, detector attenuation factor, chart speed, sample loop temperature, column temperature and identity, and the carrier gas type and flow rate on a data form such as Figure 5.1. It is also recommended that the same information be recorded directly on the chromatogram. Record the operating parameters for the particular detector being used.
5. Examine the chromatogram to ensure that adequate resolution is being achieved for the major components of the sample. If adequate resolution is not being achieved, vary the GC conditions until resolution is achieved, and reanalyze the standards to recalibrate the GC at the new conditions.
6. After conducting the analysis with acceptable peak resolution, determine the retention time of the sample components and compare them to the reten-

tion times for the standard compounds. To qualitatively identify an individual sample component as a target compound, the retention time for the component must match within 0.5 seconds or 1%, whichever is greater, of the retention time of the target compound determined with the calibration standards.

7. Repeat the injection of the first sample until the area count for each identified target compound from two consecutive injections give area counts within 5 percent of their average.
8. Multiply the average area count of the consecutive injections by the attenuation factor to get the area value for that sample, and record the area value on the data form provided in Figure 5.1. **NOTE: When dispensing liquid from a syringe, take care to account for the volume of liquid present in the syringe needle. In general, the potential error resulting from the volume of the needle is most conveniently avoided by ensuring that the needle volume is completely full of liquid upon filling the syringe and dispensing from it. If air pockets exist in the syringe after filling, this will be almost impossible.**
9. Repeat the procedure for the other two samples collected at the same sampling location.
10. Immediately following the analysis of the last sample, reanalyze the calibration standards, and compare the area values for each standard to the corresponding area values from the first calibration analysis. If the individual area values are within 5% of their mean value, use the mean values to generate a final calibration curve for determining the sample concentrations. If the individual values are not within 5% of their mean values, generate a calibration curve using the results of the second analysis of the calibration standards, and report the sample results compared to both standard curves.

Determine the bag sample water content by measuring the temperature and the barometric pressure near the bag. Use water saturation vapor pressure chart, assuming the relative humidity of the bag to be 100% unless a lower value is known, to determine the water vapor content as a decimal figure (% divided by 100). If the bag has been heated during sampling, the flue gas or duct moisture content should be determined using Method 4.

5.3.2 *Analysis of Direct Interface Samples* - Prior to analysis of the direct interface sample, the GC should be calibrated using a set of gaseous standards prepared by one of the techniques described in Subsection 5.1 and a successful analysis of an audit sample should be completed. If possible, the audit samples should be introduced directly into the probe. Otherwise, the audit samples are introduced into the sample line immediately following the probe. The calibration is done by disconnecting the sample line coming from the probe, from the gas sampling valve sample loop inlet, and connecting the calibration standards to the loop for analysis. During the analysis of the calibration standards and the audit sample(s), make certain that the sample loop pressure immediately prior to the injection of the standards is at the same pressure that will be used for sample analysis. To analyze the direct interface samples after GC calibration, use the following procedures:

1. Reconnect the sample line to the inlet of the gas sample loop, switch the valve to the load position, and turn on the sampling pump. Adjust the sampling rate to at least 100 cc/minute, and, for the first sample, purge the sample line long enough to flush the sample loop and the preceding volume of tubing a minimum of 7 times.

2. After purging the sampling system and the sample loop, decrease the sample flow using the needle valve downstream of the loop until the loop pressure, measured by a water manometer connected to a tee at the outlet of loop, is equal to the pressure used during calibration.
3. Once the loop is at the correct pressure, immediately switch the sample valve to the inject position. Note the time of the injection on the strip chart recorder and/or actuate the electronic integrator. The flow through the sample line can be returned to 100cc/min after sample injection, and, after the unretained compounds are detected, the gas sample valve can be switched back to the load position. The system will then be ready to inject the second sample as soon as the first analysis is completed.
4. Record the sample identity, detector attenuation factor, chart speed, sample loop temperature, column temperature and identity, and the carrier gas type and flow rate on a form such as Figure 5.1. It is also recommended that the same information be recorded directly on the chromatogram. Record the operating parameters for the particular detector being used.
5. Examine the chromatogram to ensure that adequate resolution is being achieved for the major components of the sample. If adequate resolution is not being achieved, vary the GC conditions until resolution is achieved, and reanalyze the standards to recalibrate the GC at the new conditions.
6. Immediately after the first analysis is complete, repeat steps 2 and 3 to begin the analysis of the second sample.
7. After conducting the analysis of the first sample with acceptable peak resolution, determine the retention time of the sample components and compare them to the retention times for the standard compounds. To qualitatively identify an individual sample component as a target compound, the retention time for the component must match, within 0.5 seconds or 1%, whichever is greater, the retention time of the target compound determined with the calibration standards.
8. At the completion of the analysis of the second sample, determine if the area counts for the two consecutive injections give area counts within 5 percent of their average. If this criterion cannot be met due to the length of the analysis, and the emissions are known to vary because of a cyclic or batch process, then the analysis results can still be used with the prior approval of the Administrator.
9. Analyze a minimum of three samples collected by direct interface to constitute an emissions test.
10. Immediately following the analysis of the last sample, reanalyze the calibration standards, and compare the area values for each standard to the corresponding area values from the first calibration analysis. If the individual area values are within 5% of their mean value, use the mean values to generate a final calibration curve to determine the sample concentrations. If the individual values are not within 5% of their mean values, generate a calibration curve using the results of the second analysis of the calibration standards, and report the sample results compared to both standard curves.

5.3.3 *Analysis of Dilution Interface Samples* - For the analysis of dilution interface samples, the procedures described for direct interface sampling in Subsection 5.3.2 should be followed, with the addition of a check of the dilution system.

Prior to any sample analysis, the GC must first be calibrated, followed by the dilution system check and an analysis of the audit sample(s). The audit sample(s) are introduced preferably into the inlet to the dilution system or directly into the gas sampling valve. Use the following procedures to conduct the check of the dilution system:

1. Heat the dilution system to the desired temperature (0° to 3°C above the source temperature) or, if the dilution system components can not tolerate that temperature, to a temperature high enough to prevent condensation.
2. Adjust the dilution system to achieve the desired dilution rate, and introduce a high concentration target gas into the inlet of the dilution system. After dilution through the stage(s) to be used for actual samples, the target gas should be at a concentration that is within the calibration range.
3. Purge the gas sample loop with diluted high concentration target gas at a rate of 100 cc/min for 1 minute, adjust the loop pressure measured by a water manometer connected to a tee at the outlet of the loop, to the loop pressure that was used during calibration and will be used during sample analysis. The procedure for pressure adjustment for the sample loop will vary with the type of dilution system that is used. In general, the loop pressure can be lowered by reducing the flow into the loop and raised by restricting the flow from the loop.
4. After achieving the proper loop pressure, immediately switch the gas sample valve to the inject position.
5. Note the time of the injection on the strip chart recorder and/or actuate the electronic integrator. Also, record the sample identity, detector attenuation factor, chart speed, sample loop temperature, column temperature and identity, and the carrier gas type and flow rate on a form such as Figure 5.1. It is also recommended that the same information be recorded directly on the chromatogram. Record the operating parameters for the particular detector being used.
6. Determine the peak area and retention time for the target compound used for the dilution check, and calculate the area value using the detector attenuation. Compare the retention time to the retention time of the target compound calibration standard. The retention times should agree within 0.5 seconds or 1%, whichever is greater. If the retention times do not agree, identify the problem and repeat the dilution check.
7. Calculate the concentration of the dilution check gas (C_d) using the following formula.

$$C_d = \frac{Y - b}{S} \times d \qquad \text{Equation 5-14}$$

where

Y = Dilution check target compound peak area, area counts,
b = y-intercept of the calibration curve, area counts,
S = Slope of the calibration curve, area counts/ppm_v, and
d = Dilution rate of the dilution system, dimensionless.

8. If the calculated value for the dilution check gas is not within 10% of the actual dilution check gas, then determine if the GC or the dilution system is in error. Check the calibration of the GC by analyzing one of the calibration samples directly bypassing the dilution system. If the GC is properly calibrated, then adjust the dilution system, and repeat the analysis of the dilution check gas until the calculated results are within 10% of the actual concentration.

Once the dilution system and the GC are operating properly, analyze the audit sample(s). Upon completion of a successful audit, the system is ready to analyze samples following the procedures described in Subsection 5.3.2. To load the sample from the dilution system may not require a pump on the outlet of the sample loop, but calibration of the GC using standards prepared in Tedlar bags will require a pump. The system should be configured so that the pump can be taken off line when it is not needed.

5.3.4 *Analysis of Adsorption Tube Samples* - Prior to the analysis of adsorption tube samples, the target compounds adsorbed on the adsorption material must be desorbed. The procedures found to give acceptable desorption efficiencies determined in Subsection 5.1.4 should be used. The procedures for the analysis of the sample desorption solutions are the same as those used for the standards. During sample analysis, the sample collection efficiency must be determined. Use the following procedures to determine the collection efficiency:

1. Desorb the primary and backup sections of the tubes separately using the procedures found to give acceptable (50%) desorption efficiency for the spiked adsorption material. Use the same final volume of desorption solution for the samples as was used for the standard solutions. If more than one adsorption tube was used in series per test run, delay desorbing the additional tubes until the analysis of the primary and backup section of the first tube is complete, and the collection efficiency for the first tube determined. Select the samples from the sampling run when the flue gas or duct moisture was the highest and, if known, when the target compound concentrations were the highest and analyze them first.
2. Calibrate the GC using standards prepared directly in desorption solvent or prepared on adsorbent and desorbed.
3. Select a suitably sized injection syringe (5- or 10-μl), and flush the syringe with acetone (or some other suitable solvent if acetone is a target compound) to clean the syringe.
4. Flush the syringe with the desorption solution from the tube's backup section by withdrawing a syringe full of the solution from the septum vial, and dispensing the solution into a beaker containing charcoal adsorbent.
5. Refill the syringe with the backup section desorption solution, withdraw the syringe from the vial, and wipe the syringe needle with a laboratory tissue.
6. Adjust the syringe volume down to the amount used for injecting standards and inject the sample into the GC. Note the time of the injection on the strip chart recorder and/or actuate the electronic integrator. Also, record the sample identity, detector attenuation factor, chart speed, injection port temperature, column temperature and identity, and the carrier gas type and flow rate on the data form shown in Figure 5.1. It is also recommended that the same information be recorded directly on the chromato-

gram. Record the operating parameters for the particular detector being used.

7. After the analysis, determine the retention time of the major sample components, and compare these retention times to the retention times determined for the target compounds during analysis of the standards. To qualitatively identify an individual sample component as a target compound, the retention time for the component must match, within 0.5 seconds or 1%, whichever is greater, the retention time of the target compound determined with the calibration standards. Determine the peak area for each target compound identified in the sample.
8. Repeat the injection of the first sample until the area counts for each identified target compound from two consecutive injections are within 5 percent of their average.
9. Multiply the average area count of the consecutive injections by the attenuation factor to get the area value for that sample.
10. Next analyze the desorption solution from the primary section of the same adsorption tube following steps 4 through 9 above.
11. For each target compound, calculate the total weight (W), in ug, present in each section, taking into account the desorption efficiency using the formula below.

$$W_p \text{ or } W_b = \frac{(Y - b)}{S} \times \frac{1}{DE} \qquad \text{Equation 5-15}$$

where

Y = Average value for the target compound in the section (primary or backup), area counts,
b = y-intercept from the three-point calibration curve for the target compound, area counts,
S = Slope from the three-point calibration curve for the target compound, area/ug, and
DE = Desorption efficiency (if standards prepared directly in desorption solvent are used for calibration).

12. Determine the percent of the total catch found in the primary section for each target compound identified using the following formula.

$$E_{cx} = \frac{m_{px}}{(m_{px} + m_{bx})} \times 100\% \qquad \text{Equation 5-16}$$

where

E_{cx} = Collection efficiency of the primary section for target compound x, percent,
m_{px} = Catch of compound x in the primary section, ug, and
m_{bx} = Catch of compound x in the backup section, ug.

If the collection efficiency for the primary section for each target compound identified is $\geq$ 90%, then the collection efficiency for that compound is acceptable. If the collection efficiency for all the target compounds identified in the sample is acceptable, then the analysis of any additional tubes used in series behind the first tube will not be necessary. Proceed with the analysis of the other adsorption tube samples.

12. If the collection efficiency for any identified target compound is not acceptable, then analyze the second tube (if used) connected in series and determine the collection efficiency for that tube using the steps described above. If the second tube does not exhibit acceptable collection and a third tube was used, analyze the third tube. If acceptable collection efficiency cannot be demonstrated for the sampling system, then the emission test using adsorption tubes will not be acceptable.
13. Immediately following the analysis of the last sample, reanalyze the calibration standards, and compare the area values for each standard to the corresponding area values from the first calibration analysis. If the individual area values are within 5% of their mean value, use the mean values to generate a final calibration curve for determining the sample concentrations. If the individual values are not within 5% of their mean values, generate a calibration curve using the results of the second analysis of the calibration standards, and report the sample results compared to both standard curves.

5.3.5 *Analysis of Heated Syringe Gas Samples by Direct Injection* - For the analysis of samples collected in heated syringes, the GC will have to be equipped with an injection septum fitted to the gas sampling valve sample loop inlet. Calibrate the GC following one of the procedures described in Subsection 5.1 for gaseous calibration standards. Analyze the heated syringe samples by the following procedures:

1. Attach a GC septum to a quick connect, or equivalent, compatible with the connector on the gas sampling valve, and attach this connector to the gas sampling valve.
2. Insert the needle of the heated syringe through the septum, and purge the sample loop by injecting a volume of the gas sample at least ten times greater than the sample loop volume.
3. Allow the sample loop pressure, measured by a water manometer connected to a tee on the outlet of the sample loop, to reach the same loop pressure seen during analysis of the calibration standards, and immediately switch the gas sample valve to the inject position.
4. Note the time of the injection on the strip chart recorder and/or actuate the electronic integrator. Also, record the sample identity, detector attenuation factor, chart speed, sample loop temperature and volume, column temperature and identity, and the carrier gas type and flow rate on a form such as Figure 5.1. It is also recommended that the same information be recorded directly on the chromatogram. Record the operating parameters for the particular detector being used.
5. Examine the chromatogram to ensure that adequate resolution is being achieved for the major components of the sample. If adequate resolution is not being achieved, vary the GC conditions until resolution is achieved, and reanalyze the standards to recalibrate the GC at the new conditions.

6. After conducting the analysis with acceptable peak resolution, determine the retention time of the sample components and compare them to the retention times for the standard compounds. To qualitatively identify an individual sample component as a target compound, the retention time for the component must match, within 0.5 seconds or 1%, whichever is greater, the retention time of the target compound determined with the calibration standards.
7. Repeat the injection of the first sample until the area counts for each identified target compound from two consecutive injections are within 5 percent of their average.
8. Multiply the average area count of the consecutive injections by the attenuation factor to get the area value for that sample.
9. Repeat the procedure for the other two samples collected at the same sampling location.
10. Immediately following the analysis of the last sample, reanalyze the calibration standards, and compare the area values for each standard to the corresponding area values from the first calibration analysis. If the individual area values are within 5% of their mean value, use the mean values to generate a final calibration curve for determining the sample concentrations. If the individual values are not within 5% of their mean values, generate a calibration curve using the results of the second analysis of the calibration standards, and report the sample results compared to both standard curves.

Date_____ Plant Name _____ Sampling Location _____

Checks for Analysis of All Calibration Standards

A minimum of three concentration levels used for each target compound? ____ yes ____ no. (The concentration used should bracket the expected concentrations of the actual field samples.)

Proper GC conditions established prior to standard analysis? ____ yes ____ no. (For initial conditions use analytical conditions found to be acceptable during preliminary survey sample analysis.)

Individual peak areas for consecutive injections within 5% of their mean for each target compound? ____ yes ____ no. (Repeat analysis of standards until 5% criteria is met.)

Second analysis of standards after sample analysis completed? ____ yes ___ no.

Peak areas for repeat analysis of each standard within 5% of their mean peak area? ____ yes ____ no. (If no, then report sample results compared to both standard curves.)

Checks for Calibrations using Commercial Cylinder Gases

Vendor concentration verified by direct analysis? _____ yes _____ no.

Sample loop purged for 30 seconds at 100 ml/min prior to injection of calibration standards? ____ yes ____ no.

Checks for Preparation and Use of Calibration Standards Prepared by Dilution

Dilution system flowmeters calibrated? _____ yes ____ no. (Calibrate following procedure described in Subsection 2.1.3.)

Sample loop purged for 30 seconds at 100 ml/min prior to injection of calibration standards? ____ yes ____ no.

Dilution ratio for dilution system verified? ____ yes ____ no. (Analysis of low concentration cylinder gas after establishing calibration curve recommended to verify dilution procedure, but not required since audit sample will also verify dilution ratio.)

Figure 5.10. Postsampling operations checklist.

Figure 5.10 (Continued)

Checks for Preparation and Use of Calibration Standards by Direct Injection of Gaseous Compounds or Liquid Injection

Tedlar bag used to contain prepared standard leak and contamination free? yes ____ no ____.

Dry gas meter used to fill bag calibrated? ____ yes ____ no. (Calibrate meter following procedure described in Subsection 2.1.2.)

Organic standard material used for injection 99.9% pure? ____ yes ____ no. (If no, then determine purity and use to correct calculated calibration standard concentration.)

Prepared standard allowed to equilibrate prior to injection? ____ yes ____ no. (Massage bag by alternately depressing opposite ends 50 times.)

Sample loop purged for 30 seconds at 100 ml/min prior to injection of calibration standards? ____ yes ____ no.

Development of Relative Response Factors and Retention Times

Suitable target organic or surrogate compound selected? ____ yes ____ no. (Select compound that is stable, easy to prepare in the field, and has a retention time similar to the target organic compounds.)

Relative response factors and retention times verified in the laboratory prior to actual field use? ____ yes ____ no. (If no, verify following the procedure described in Subsection 5.1.4.)

Checks for Preparation, Use, and Determination of Desorption Efficiency for Adsorption Tube Standards

Organic standard material used for injection 99.9% pure? ____ yes ____ no. (If no, then determine purity and use to correct calculated calibration standard concentration.)

Correct adsorbent material and desorption solvent selected? ____ yes ____ no. (Refer to Table B in Method Highlights Section for proper adsorbent material and desorption solvent.)

Desorption efficiency determined for adsorbent to be used for field sampling? ____ yes ____ no. (If no, follow the procedure described in Subsection 5.1.5.)

Figure 5.10 (Continued)

Checks for All GC Analysis of Field Samples

Check type of carrier gas used: helium ____, nitrogen ____, other _____

Carrier gas flow rate and pressure set correctly? ____ yes ____ no. (Carrier gas flow rate and pressure set according to conditions developed during presurvey sample analysis and within limitations of the GC as specified by GC manufacturer.)

Oxygen and hydrogen flow rate and pressure for FID correct? ____ yes ____ no (Oxygen and hydrogen gas flow rate and pressure for FID set according to conditions developed during presurvey sample analysis and within limitations of the GC as specified by GC manufacturer.)

Individual peak areas for consecutive injections within 5% of their mean for each target compound? ____ yes ____ no. (Repeat analysis of standards until 5% criteria is met.)

Audit sample analyzed and results within 10% of actual value? ____ yes ___ no. (If no, recalibrate GC and/or reanalyze audit sample.)

Checks Type of Standard Used for Tedlar Bag Sample Analysis

Gas cylinders ____, dilution of gas cylinders ____, direct gas injection ____, direct liquid injection ____, and/or relative response factors and retention times ____.

Checks For GC Analysis Of Tedlar Bag Samples

Sample loop purged for 30 sec. at 100 ml/min prior to injection of calibration standards? ____ yes ____ no.

Stability of gas sample in Tedlar bag determined? ____ yes ____ no. (Determine stability by conducting a second analysis after the first at a time period equal to the time between collection and the first analysis. The change in concentration between the first and second analysis should be less than 10%.)

Retention of target compounds in Tedlar bag determined? ____ yes ____ no. (If no, then follow the procedure described in Subsection 5.3.1.)

Check GC Interface Technique Used

Direct Interface __, 10:1 Dilution Interface __, 100:1 Dilution Interface __.

Figure 5.10 (Continued)

Checks For Suitability of GC Interface Technique

Analytical interference due to moisture content of source gas? ____ yes ___ no. (Moisture in the source gas must not interfere with analysis in regard to peak resolution according to EPA Method 625 criterion where the baseline-to-valley height between adjacent peaks is less than 25% of the sum of the two adjacent peaks.)

Physical requirements for equipment met on-site? ____ yes ____ no. (The physical requirements for the equipment include sheltered environment, "clean", uninterrupted power source suited for equipment, and adherence to safety aspects related to explosion risk areas.)

Source gas concentration below level of GC detector saturation? ___yes ___ no. (Concentrations delivered to the detector can be reduced by using smaller gas sample loops and/or dilution interface.)

Sampling systems purged with 7 changes of system volume prior to sample analysis? ____ yes ____no.

Check Type(s) of Standards Used for Interface Techniques

Gas cylinders ____, dilution of gas cylinders ____, direct gas injection ____, direct liquid injection ____, and/or relative response factors and retention times ____.

Checks For Dilution Interface Analytical Apparatus

Dilution rate verified (within 10%) by introducing high concentration gas through dilution system and analyzing diluted gas? ____ yes ____ no. (If dilution rate not verified, then first check calibration of GC by reanalyzing a calibration standard and then adjust dilution system to give desired ratio).

Sampling systems purged with 7 changes of system volume prior to sample analysis? ____ yes ____no.

Check Type of Standard Used for Adsorption Tube Analysis

Prepared directly in desorption solvent ____, and/or prepared on adsorbent and desorbed ____.

Checks for GC Analysis of Adsorption Tube Samples

Desorption procedure used identical to procedure used to determine the desorption efficiency? ____ yes ____ no.

Figure 5.10 (Continued)

Collection efficiency determined for adsorption tubes used for actual field sampling? ____ yes ____ no. (If no, then determine collection efficiency following the procedures described in Subsection 5.3.4.)

Check Type of Standard Used for Analysis of Heated Syringe Samples

Gas cylinders ____, dilution of gas cylinders ____, direct gas injection ____, direct liquid injection ____, and/or relative response factors and retention times ____.

Table 5.1. ACTIVITY MATRIX FOR SAMPLE ANALYSIS

Characteristic	Acceptance limits	Frequency and method of measurement	Action if requirements are not met
Calibration Standards			
All calibrations	1) Standard analysis performed under same GC conditions to be used for samples	Before analysis of calibration standards determine sample analysis conditions	Reanalyze standards under conditions to be used for samples
	2) Three-point (minimum) calibration curve generated for each target compound	Before analysis acquire or prepare standards for each target compound at three levels	Acquire or prepare standards at at three levels to bracket samples
	3) Sufficient amount of each standard to recalibrate after samples are analyzed	Prior to initial calibration and sample analysis, determine amount needed	Acquire or prepare enough standards
Commercial gas cylinder mixtures	Certified by direct analysis (within 5% of manufacturer's value); three levels bracketing samples	Prior to use, check if independent analysis conducted and acceptable and standards will bracket samples	Procure certified gas cylinders in proper range
Gas standards from high concentration gas cylinders	Dilution ratio of dilution system verified (optional) with calculated value using calibration curve within 10% of actual conc.	Prior to sample analysis; calibration curve from standards verified by analysis of an undiluted sample	Identify and correct problems with dilution system, and remake, reanalyze, and reverify standards
Standards prepared by direct gas injection	Gas injected 99.9% pure, or calculated standard concentration corrected for gas impurity	When calculating standard concentration, determine purity of gas standard	Use pure gas or determine purity
Standards prepared by liquid injection	Liquid injected 99.9% pure, or calculated standard corrected for liquid impurity	When calculating standard concentration, determine purity of liquid standard	Use pure liquid or determine purity

(Continued)

Table 5.1 (Continued)

Characteristic	Acceptance limits	Frequency and method of measurement	Action if requirements are not met
Calibration Standards			
Relative response factors and relative retention times	Proper target or surrogate standard selected for on-site calibration; method verified (calculated results within 10% of actual concentration)	When selecting standard choose stable, easy to prepare standard with retention time near or between target compounds; verfied following procedures described in Subsection 5.1.5	Select different target or surrogate compound; if procedure cannot be verified use calibration standard for each target compound
Standards prepared for adsorption tube samples	1) Liquid injected 99.9% pure, or calculated standard corrected for	When calculating standard concentration, determine purity of liquid standard	Use pure liquid or determine purity
	2) Acceptable desorption efficiency for target compounds on adsorbent material (>50%)	During calibration standard analysis determine desorption efficiency for each target compound (see Subsection 5.1.5)	Try longer desorption times, more vigorous desorption conditions, and/or other desorbents
Audit sample analysis	Analytical result for audit sample within 10% of actual concentration	After initial calibration and prior to sample analysis, analyze audit sample	Reanalyze audit sample, if not acceptable, remake and reanalyze standards
Sample Analysis			
All samples	1) Audit sample analysis within 10% of actual conc.	Prior to sample analysis, analyze audit sample	Analyze audit sample
	2) Sample analysis conditions the same as conditions used for analysis of standards	Prior to sample analysis check that analytical conditions are the same as those used for standard analysis	Establish the same analytical conditions used during analysis of standards

(Continued)

Table 5.1 (Continued)

Characteristic	Acceptance limits	Frequency and method of measurement	Action if requirements are not met
Sample Analysis			
All samples	3) Retention times for target compounds identified in sample within 0.5 seconds or 1% of standards	After analysis, determine retention times for major components in sample and compare to standard retention times	Qualitative identification requires retentimes within 0.5 seconds or 1%; repeat analysis
	4) Area counts for consecutive injections of samples within 5% of their average for each target compound identified in sample	After second analysis of a sample, calculate average area for first and second analysis and percent difference of single analysis from the average	Repeat sample injections until consecutive injections are achieved meeting the 5% criteria for each target compound
	5) All three samples constituting a test analyzed together	During sample analysis	Analyze remaining samples
	6) After sample analysis, repeat analysis of standards; area counts for each standard analysis within 5% of their mean	After analysis of last sample repeat standard analysis; calculate mean area counts and percent difference for each standard	Report sample results using both curves, if 5% criteria not met
Bag samples	1) Bag sample moisture content determined	During analysis using vapor pressure chart assuming 100% or known value for relative humidity	Measure ambient pressure and temperature near bag
	2) Stability check conducted on bag content (<10% change between first and second analysis)	Second analysis conducted *n* days after first analysis where *n* equals the number of days between sample collection and first analysis	Conduct stability check and if criteria not met then correct sample results with approval of Administrator

(Continued)

Table 5.1 (Continued)

Characteristic	Acceptance limits	Frequency and method of measurement	Action if requirements are not met
Sample Analysis			
Direct interface samples	Two consecutive injections give area counts within 5% of their mean	After second analysis, calculate average area counts and percent difference	Due to cyclic or batch processes and analysis time, emission levels may vary; use results with the prior approval of the Administrator
Dilution interface samples	1) Dilution ratio verified (results from analysis of high concentration standard through dilution system within 10% of actual concentration	Prior to sample analysis analyze high concentration gas introduced through dilution system	Identify problem; recalibrate GC or adjust dilution system and repeat analysis of high concentration gas
	2) Two consecutive injections give area counts within 5% of their mean	After second analysis, calculate average area counts and percent difference	Due to cyclic or batch processes and analysis time, emission levels may vary; use results with the prior approval of the Administrator
Adsorption tube samples	Collection efficiency determined for adsorption tubes (90% of each target compound identified caught on primary section)	Desorb and analyze primary and backup sections separately	Analyze additional tube(s) if used as backups to first tube; if criteria cannot be met, test is not valid

6.0 CALCULATIONS

Calculation errors due to procedural or mathematical mistakes can be a part of total system error. Therefore, it is recommended that each set of calculations be repeated or spotchecked, preferably by a team member other than the one who performed the original calculations. If a difference greater than typical round-off error is detected, the calculations should be checked step-by-step until the source of error is found and corrected. A computer program is advantageous in reducing calculation errors. If a standardized computer program is used, the original data entered should be included in the printout so it can be reviewed; if differences are observed, a new computer run should be made. Table 6.1 at the end of this section summarizes the quality assurance activities for calculations.

Calculations should be carried out to at least one extra decimal figure beyond that of the acquired data and should be rounded off after final calculation to two significant digits for each run or sample. All rounding of numbers should be performed in accordance with the ASTM 380-76 procedures. All calculations should then be recorded on a calculation form such as the ones in Figures 6.1 and 6.2 for analysis by gas or liquid injection, respectively.

6.1 Calculations for GC Analysis Using Gas Injection

The same equation can be used to calculate the concentration of each organic in Method 18 samples whenever the sampling technique used yields a gaseous sample which can be injected into the GC. These techniques are: (1) the integrated bag sampling technique, (2) the heated bag sampling technique, (3) the prefilled bag sampling technique, (4) the direct interface sampling technique, and (5) the dilution interface sampling technique. This equation is used to calculate the sample concentration (C_c) in ppm on a dry basis as follows:

$$C_c = \frac{C_s \; P_r \; T_i \; F_r \; K}{P_i \; T_r \; (1 - B_{ws}/K)} \qquad \text{Equation 6-1}$$

where

C_s = Concentration of organic from calibration curve, ppm,
P_r = Reference pressure, the barometric pressure or absolute sample loop pressure recorded during calibration, mm Hg,
T_i = Sample loop temperature at time of sample analysis, °K,
P_i = Barometric or absolute sample loop pressure at time of sample analysis, mm Hg,
T_r = Reference temperature, the temperature of the sample loop recorded during calibration, °K,
B_{ws} = Water vapor content of the stack gas, proportion by volume,
F_r = Relative response factor, if applicable (see Subsection 5.1.5), and
K = Dilution factor (applicable only for dilution interface and prefilled bag sampling; for a 10 to 1 dilution, K = 10).

6.2 Calculations for GC Analysis by Liquid Injection

For Method 18, liquid injection GC analyses are used in conjunction with the adsorption tube sampling procedure. The same general equations are typically used to calculate the concentration of each organic in a sample collected on an adsorption tube. However, the tester is referred to the National Institute of Occupational Health and Safety (NIOSH) method (see Table B in the Method Highlights Section) for specifics on calculations for particular organics. The general equations are shown below.

6.2.1 *Sample Volume Corrected to Standard Conditions on a Dry Basis* - The corrected sample volume ($V_{std,dry}$) is calculated as shown.

$$V_{std,dry} = \frac{T_{std}\ P_{bar}\ V_m}{P_{std}\ T_s\ (1 - B_{ws}/K)^*} = 0.3858\ \frac{P_{bar}\ V_m}{T_s\ (1 - B_{ws}/K)^*}$$

Equation 6-2

where

T_{std}/P_{std} = 0.3858 °K/mm Hg,
V_m = Sample volume measured, L,
P_{bar} = Barometric pressure during sampling, mm Hg,
T_s = Temperature of sample gas, °K,
B_{ws} = Water vapor of stack gas, proportion by volume, and
K = Dilution factor, if applicable.

***Note: Only apply this correction if a dessicant is not used.**

6.2.2 *Desorption Efficiency* - Desorption efficiency (DE) for recovery of a specific compound using a certain solvent from an adsorption tube is calculated using the following equation.

$$DE = \frac{Q_r - B}{Q_a}$$

Equation 6-3

where

Q_r = Average peak area for spiked tubes,
Q_a = Average peak area for spiked solutions, and
B = Average peak area for media blanks.

6.3.3 *Concentration of Organic in Sample* - The concentration (C) of the organic in the sample in milligrams per dry standard cubic meter or micrograms per dry standard liter (mg/dscm or ug/dsL) is calculated using the following equation.

$$C = \frac{(W_f + W_b - B_f - B_b)K}{V_{std} \times DE}$$ Equation 6-4

where

W_p = Mass of organic found in primary sorbent section, ug,
W_b = Mass of organic found in backup sorbent section, ug,
B_p = Mass of organic found in primary section of average media blank, ug,
B_b = Mass of organic found in backup section of average media blank, ug,
K = Dilution factor, if applicable (for a 10 to 1 dilution, K = 10),
$V_{std,dry}$ = Sample volume corrected to standard conditions and a dry basis, L, and
DE = Desorption efficiency, decimal value.

6.2.4 *Conversion to ppm* - To convert the concentration in milligrams per dry standard cubic meter (micrograms per dry standard liter) to ppm, the following equation can be used.

$$C_{ppm} = \frac{24.055 \text{ (dsL/g-mole gas)} \times C}{MW}$$ Equation 6-5

where

C = Concentration of organic, ug/dsL or mg/dscm, and
MW = Molecular weight of organic, ug/ug-mole.

SAMPLE CONCENTRATION

C_s = 190 ppm, P_r = 753.8 mm Hg, T_i = 370.0 °K,
P_i = 754.5 mm Hg, T_r = 370.0 °K, B_{ws} = 0.02,
K^* = NA, F_r^* = NA

$$C_c = \frac{C_s \; P_r \; T_i \; F_r \; K}{P_i \; T_r \; (1 - B_{ws}/K)^*} = 194 \text{ ppm} \qquad \text{Equation 6-1}$$

*If applicable.

Figure 6.1. Calculation form for GC analysis by gas injection.

SAMPLE VOLUME, DRY BASIS AT STANDARD CONDITIONS

V_m = 25.2 L, P_{bar} = 754.5 mm Hg,

T_s = 300.0 °K, B_{ws}* = 0.02, K* = NA.

$$V_{std,dry} = 0.3858 \frac{P_{bar} V_m}{T_s (1 - B_{ws}/K)^*} = 25.0 \text{ L}$$ Equation 6-2

*If applicable.

DESORPTION EFFICIENCY

Q_r = 879, Q_a = 956, B = 0

$$DE = (Q_r - B)/Q_a = 0.92$$ Equation 6-3

SAMPLE CONCENTRATION

W_p = 876.0 ug, W_b = 120.0 ug, B_p = 0 ug,

B_b = 0 ug, V_{std} = 25.0 L, DE = 0.92,

K* = NA.

$$C = \frac{(W_p + W_b - B_p - B_b)K}{V_{std} \times DE} = 38.6 \text{ mg/dscm or ug/dsL}$$ Equation 6-4

CONVERSION TO PPM

C = ___. mg/dscm or ug/dsL, MW = 54.1 ug/ug-mole,

$$C_{ppm} = \frac{24.055 \text{ (dsL/g-mole gas)} \times C}{MW} = 17.2 \text{ ppm}$$ Equation 6-5

Figure 6.2. Calculation form for GC analysis by liquid injection.

Table 6.1. ACTIVITY MATRIX FOR CALCULATION CHECKS

Characteristic	Acceptance limits	Frequency and method of measurement	Action if requirements are not met
Analysis data form	All data and calcutions are shown	Visually check	Complete the missing data
Calculations	Difference between check and original calculations should not exceed round-off error	Repeat all calculations starting with raw data for hand calculations; check all raw data input for computer calculations; hand calculate one sample per test	Indicate errors on calculation form, Figure 6.1 or 6.2

7.0 MAINTENANCE

The normal use of emission-testing equipment subjects it to corrosive gases, extremes in temperature, vibration, and shock. Keeping the equipment in good operating order over an extended period of time requires knowledge of the equipment and a program of routine maintenance which is performed quarterly or after 2830 L (100 ft^3) of operation, whichever is greater. In addition to the quarterly maintenance, a yearly cleaning of pumps and metering systems is recommended. Maintenance procedures for the various components are summarized in Table 7.1 at the end of the section. The following procedures are not required, but are recommended to increase the reliability of the equipment.

7.1 Pump

Several types of pumps may be used to perform Method 18; the two most common are the fiber vane pump with in-line oiler and the diaphragm pump. The fiber vane pump requires a periodic check of the oiler jar. Its contents should be translucent; the oil should be changed if not translucent. Use the oil specified by the manufacturer. If none is specified, use SAE-10 nondetergent oil. Whenever a fiber vane pump starts to run erratically or during the yearly disassembly, the head should be removed and the fiber vanes changed. Erratic operation of a diaphragm pump is normally due to either a bad diaphragm (causing leakage) or to malfunctions of the valves, which should be cleaned annually by complete disassembly.

7.2 Dry Gas Meter

Dry gas meters should be checked for excess oil or corrosion of the components by removing the top plate every 3 months. Meters should be disassembled and all components cleaned and checked whenever the rotation of the dials is erratic, whenever the meter will not calibrate properly over the required flow rate range, and during the yearly maintenance.

7.3 Rotameter

Rotameters should be disassembled and cleaned according to the manufacturer's instructions using only recommended cleaning fluids every 3 months or upon erratic operation.

7.4 Manometer

The fluid in the manometers should be changed whenever there is discoloration or visible matter in the fluid, and during the yearly disassembly.

7.5 Sampling Train

All remaining sampling train components should be visually checked every 3 months and completely disassembled and cleaned or replaced yearly. Many items, such as quick disconnects, should be replaced whenever damaged rather than checked periodically. Normally, the best procedure for maintenance in the field is to have on hand another entire unit such as a pump, Tedlar bags and containers, or heated sample line rather than replacing individual components.

7.6 Gas Chromatograph

Maintenance activities and schedules for gas chromatographs are make and model specific. It is therefore recommended that the analyst consult the operator's manual for instructions relative to maintenance practices and procedures.

Table 7.1. ACTIVITY MATRIX FOR EQUIPMENT MAINTENANCE CHECKS

Apparatus	Acceptance limits	Frequency and method of measurement	Action if requirements are not met
Fiber vane pump	In-line oiler free of leaks	Periodically check oiler jar; remove head and change fiber vanes	Replace as needed
Diaphragm pump	Leak-free valves functioning properly	Clean valves during yearly disassembly	Replace when leaking or malfunctioning
Dry gas meter	No excess oil, corrosion, or erratic rotation of the dial	Check every 3 mo. for excess oil or corrosion by removing the top plate; check valves and diaphragm yearly and whenever meter dial runs erratically or whenever meter will not calibrate	Replace parts as needed, or replace meter
Rotameter	Clean and no erratic behavior	Clean every 3 mo. or whenever ball does not move freely	Replace
Manometer	No discoloration or visible matter in the fluid	Check periodically and during disassembly	Replace parts as needed
Sampling train components	No damage	Visually check every 3 mo.; completely disassemble and clean or replace yearly	If failure noted, replace appropriate components
Gas chromatograph	See owner's manual	See owner's manual	See owner's manual

8.0 AUDITING PROCEDURES

An audit is an independent assessment of data quality. Independence is achieved if the individual(s) performing the audit and their standards and equipment are different from the regular field team and their standards and equipment. Routine quality assurance checks by a field team are necessary to generate good quality data, but they are not part of the auditing procedure. Table 8.1 at the end of this section summarizes the quality assurance functions for auditing.

Based on the requirements of Method 18 and the results of collaborative testing of other Reference Methods, two specific performance audits are recommended:

1. An audit of the sampling and analysis of Method 18 is required for NSPS and recommended for other purposes.
2. And audit of the data processing is recommended.

It is suggested that a systems audit be conducted as specified by the quality assurance coordinator in addition to these performance audits. The two performance audits and the systems audit are described in detail in Subsections 8.1 and 8.2, respectively.

8.1 Performance Audits

Performance audits are conducted to evaluate quantitatively the quality of data produced by the total measurement system (sample collection, sample analysis, and data processing). It is required that cylinder gas performance audits be performed once during every NSPS test utilizing Method 18 and it is recommended that a cylinder gas audit be performed once during any enforcement source test utilizing Method 18 conducted under regulations other than NSPS.

8.1.1 *Performance Audit of the Field Test* - As stated in Section 6.5 of 40 CFR 60, Appendix A, Method 18, immediately after the preparation of the calibration curves and prior to the sample analysis, the analysis audit described in 40 CFR 61, Appendix C, Procedure 2: "Procedure for Field Auditing GC Analysis," should be performed. The information required to document the analysis of the audit sample(s) has been included on the example data sheets shown in Figures 8.1 and 8.2; the complete text of the procedure is reproduced in Section 3.16.10. The audit analyses shall agree within 10 percent (or other specified value, as explained below) of the true value. When available, the tester may obtain audit cylinders by contacting: U.S. Environmental Protection Agency, Atmospheric Research and Exposure Assessment Laboratory, Quality Assurance Division (MD-77B), Research Triangle Park, North Carolina 27711. Audit cylinders obtained from a commercial gas manufacturer may be used provided that (1) the gas manufacturer certifies the audit cylinder in a manner similar to the procedure described in 40 CFR 61, Appendix B, Method 106, Section 5.2.3.1, and (2) the gas manufacturer obtains an independent analysis. Independent analysis is defined as an analysis performed by an individual other than the individual who performs the gas manufacturer's analysis, while using calibration standards and analysis equipment different from those used for the gas manufacturer's analysis. Verification is completed and acceptable when the independent analysis concentration is within 5 percent of the gas manufacturer's concentration.

Responsibilities of the Audit Supervisor - The primary responsibililties of the audit supervisor are to ensure that the proper audit gas cylinder(s) are or-

dered and safe-guarded, and to interpret the results obtained by the analyst.

When auditing sampling systems that do not dilute the stack gases during sampling, the audit gases ordered must consist of the same organic compound(s) that are being tested; for emission standards on a concentration basis, the audit gas concentration(s) must be in the range of 25% to 250% of the applicable standard. If two cylinders are not available, then one cylinder can be used. If the audit cylinder value is between 5 and 20 ppm, the agreement should be within 15 percent of the stated audit cylinder value. It is strongly recommended that audit cylinder values below 5 ppm <u>not</u> be used. For emission standards which specify a control efficiency, the concentration of the audit gases should be in the range of 25% to 250% of the expected stack gas concentration. If two cylinders are not available, the audit can be conducted using one cylinder.

The audit supervisor must ensure that the audit gas cylinder(s) are shipped to the correct address, and to prevent vandalism, verify that they are stored in a safe location both before and after the audit. Also, the audit cylinders should not be analyzed when the pressure drops below 200 psi. The audit supervisor then ensures that the audits are conducted as described below.

The audit supervisor must also interpret the audit results. When the measured concentration agrees within 10 percent (or 15 percent for cylinders between 5 and 20 ppm) of the true value, he directs the analyst to begin analyzing the source samples. When the measured concentration does not agree within the specified criterion, the analyst should first recheck the analytical system and calculations, and then repeat the audit. If the analyst fails the second audit, the audit supervisor should have knowledge of the agency's policy for failure. If the result(s) are close to the allowed percentage or a consistent bias is present, the supervisor may wish to allow the analyst use of a correction factor to be applied at a later date; however, the analyst must make a significant effort to find the discrepancy and correct it. If the error cannot be found, the audit supervisor should allow analysis of the samples, and then conduct the audit again.

During the audit, the audit supervisor should record the appropriate cylinder number(s), cylinder pressure(s) (at the end of the audit), and the calculated concentrations on the "Field audit report form", Figure 8.1. The individual being audited must not, under any circumstances, be told the actual audit concentrations until the calculated concentration(s) have been submitted to the audit supervisor and are considered acceptable.

When auditing sampling systems that dilute the emissions during collection, the audit gas concentration value used in the calculations can either be based on (1) the undiluted concentration using the criteria discussed above or (2) the expected concentration of the gases following dilution during collection using the same dilution factor as used for the emission samples.

The audit procedures that follow are presented according to the type of sampling system used to collect the organic emissions and whether the samples are analyzed on-site or at the base laboratory at a later date.

Container (Bag, Syringe, and Canister) Sampling with On-site Analysis - The cylinder gas performance audit for rigid-container bag, syringe, or canister sampling with on-site analysis consists of an on-site audit just prior to the analysis of the emission samples. The recommended procedures for conducting the audit are as follows:

1. The audit samples should be collected in the type of container that will be used during the sample collection. However, to conserve on the use of the audit gas(es), it is usually not necessary to use the rest of the sampling system to collect the samples for unheated container

FIELD AUDIT REPORT

Part A. - To be filled out by organization supplying audit cylinders.

1. Organization supplying audit sample(s) and shipping address
   U.S. EPA Quality Assurance Div (MD-77), RTP, NC 27711
2. Audit supervisor, organization, and phone number
   _____
3. Shipping instructions: Name, Address, Attention
   Acme Testing, 100 Probe Ave, Stack, NC - I.M. Tester
4. Guaranteed arrival date for cylinders - 1/22/88
5. Planned shipping date for cylinders - 1/16/88
6. Details on audit cylinders from last analysis

	Low conc.	High conc.
a. Date of last analysis.....	12/10/88	.....
b. Cylinder number.....	1064	.....
c. Cylinder pressure, psi.....	1560	.....
d. Audit gas(es)/balance gas..	C_4H_6/N_2	C_4H_6/N_2
e. Audit gas(es), ppm.....	228	2130
f. Cylinder construction.....	Al	Al

Part B. - To be filled out by audit supervisor.

1. Process sampled Chemical manufacturer
2. Audit location Site
3. Name of individual audit Acme Testing
4. Audit date 2/26/88
5. Audit Results:

	Low conc. cylinder	High conc. cylinder
a. Cylinder number.....	1064	1068
b. Cylinder pressure before audit, psi.....	1560	2100
c. Cylinder pressure after audit, psi.....	1500	2050
d. Measured concentration, ppm Injection #1* Injection #2* Average.....	241/240	2120/2140
e. Actual audit concentration, ppm		
f. Audit accuracy:[1]		
Low Conc. Cylinder.....	+5.5%	.....
High Conc. Cylinder.....	.....	0%
Percent[1] accuracy = $\frac{\text{Measured Conc. - Actual Conc.}}{\text{Actual Conc.}} \times 100$		
g. Problems detected (if any).....	none	None

[1] Results of two consecutive injections that meet the sample analysis criteria of the test method.

Figure 8.1. Field audit report form.

sampling. Problems related to the reaction or retention of the organic compounds will still occur in the container. Other interferents in the stack gas such as water vapor and other organics will not be present in the audit cylinders and thus, related problems will not be assessed. For heated container systems, it may be necessary to use the sampling system to collect the audit gas. However, if the gases must be heated to prevent condensation, it is likely that an audit gas cylinder will not be available.

2. The audit samples should remain in the appropriate container approximately the same length of time that the source samples will stay prior to analysis. After the preparation of the calibration curve, a minimum of two consecutive analyses of each audit cylinder gas should be conducted. The analyses must agree within 5% of the average. The audit results should be calculated by the analyst (or representative) and given to the audit supervisor. The audit supervisor will record all the information and data on the"Field audit report form" and then inform the analyst of the status of the audit. The equations for calculation of error are included on the form.

Container (Bag and Canister) Sampling with Off-site Analysis - For cylinder gas performance audits associated with rigid-container bag or canister samples that are analyzed off-site, it is recommended that the audit be conducted off-site just prior to the emission test (if the agency desires) and then repeated during the off-site sample analysis as a quality control measure. The use of the pretest audit will help ensure that the analytical system will be acceptable prior to testing. Alternatively, the audit gas can be collected in the appropriate container on-site or off-site, and then analyzed just prior to the analysis of the field samples. It is recommended that the tester fill at least two containers with the audit gas to guard against a leak causing a failed audit. Since the use of the performance audit is to both assess and improve the data quality, the use of the pretest audit will provide the tester/analyst with a better chance of obtaining acceptable data. The recommended procedure for conducting the audit is the same as above with the exception that the audit supervisor will likely not be present during the audit and the data will be reported by telephone.

Direct Interface Sampling - Since direct interface sampling involves on-site analysis, the performance audit is conducted on-site after the calibration of the GC and prior to sampling. The audit gas cylinder is attached to the inlet of the sampling probe. Two consecutive analyses of the audit gas must be within 5% of the average of the two analyses. The tester/analyst then calculates the results and informs the audit supervisor. The audit supervisor records all information and results on the "Field audit report form" and then informs the tester/analyst as to the acceptability of the results.

Dilution Interface Sampling - Since dilution interface sampling involves on-site analysis, the performance audit is conducted on-site after the calibration of the GC and prior to sampling. If the audit gas cylinder obtained has a concentration near the diluted sample concentration, the audit gas is introduced directly into the sample port on the GC. If the audit gas cylinder obtained has a concentration close to the expected sample concentration, then the audit gas is introduced into the dilution system. The audit supervisor may wish to order one cylinder to assess both the dilution system and the analytical system and another cylinder to assess only the analytical system. Follow the same procedures described

above for recording the information and reporting the results.

Adsorption Tube Sampling - The analysis for adsorption tube sampling is usually conducted off-site. Therefore, the audit analysis is conducted off-site. Again, the recommended procedure is to conduct the audit once prior to the test and again following the test. Though the audit sample could be analyzed by direct injection, the inclusion of the chromatogram printout in the report will prove that the audit results were obtained through adsorption tube sampling and a solvent extraction. Alternatively, the audit samples can be collected on-site or off-site and then analyzed just prior to the analysis of the field samples. Since the audit supervisor will likely not be present during the analysis, the results are reported by telephone.

To collect the audit gas with the adsorption tube sampling train, connect a sample "T" to the line from the audit gas cylinder. Place the adsorption tube sampling system on one leg of the "T"; connect a rotameter to the other leg. With the sampling system off, turn on the audit gas flow until the rotameter reads 2 lpm. Turn on the sampling system and sample the audit gas for the specified run time. Approximately 1 lpm should be discharged through the rotameter.

8.1.2 *Performance Audit of Data Processing* - Calculation errors are prevalent in processing data. Data processing errors can be determined by auditing the recorded data on the field and laboratory forms. The original and audit (check) calculations should agree within round-off error; if not, all of the remaining data should be checked. The data processing may also be audited by providing the testing laboratory with specific data sets (exactly as would appear in the field), and by requesting that the data calculation be completed and that the results be returned to the agency. This audit is useful in checking both computer programs and manual methods of data processing.

8.2 Systems Audit

A systems audit is an on-site, qualitative inspection and review of the total measurement system (sample collection, sample analysis, etc.). Initially, a systems audit is recommended for each enforcement source test, defined here as a series of three runs at one source. After the test team gains experience with the method, the frequency of auditing may be reduced -- for example, to once every four tests.

The auditor should have extensive background experience in source sampling, specifically with the measurement system being audited. The functions of the auditor are summarized below:

1. Inform the testing team of the results of pretest audits, specifying any area(s) that need special attention or improvement.
2. Observe procedures and techniques of the field team during sample collection.
3. Check/verify records of apparatus calibration checks and quality control used in the laboratory analysis of control samples from previous source tests, where applicable.
4. Record the results of the audit, and forward them with comments to the test team management so that appropriate corrective action may be initiated.

While on site, the auditor observes the source test team's overall performance, including the following specific operations:

1. Conducting the GC calibration and conducting the performance audit (if the analysis is conducted on-site).
2. Setting up and leak testing the sampling train.
3. Collecting the sample at a proportional rate (if applicable) or constant rate at the specified flow rate.
4. Conducting the final leak check and recovery of the samples.
5. Conducting the initial and final check on the dilution system (if applicable).
6. Sample documentation procedures, sample recovery, and preparation of samples for shipment (if applicable).
7. Conducting sample analyses (if conducted on-site).

Figure 8.2 is a suggested checklist for the auditor.

Yes	No	Comments	Operation
			PRESAMPLING PREPARATION
✓		OK	1. Knowledge of process operations
✓		N/A	2. Results of pretest audit (± 10% or other value)
✓			3. Calibration of pertinent equipment, in particular, dry gas meters and other flowmeters
✓		Bags not heated	4. Selection and checkout of equipment for proper sampling and analytical techniques BAGS - reactivity, condensation, & retention ADSORPTION TUBES - adsorption & desorption efficiency DILUTION SYSTEM - dilution ratio GC/COLUMN - adequate resolution GC/DETECTOR - acceptable accuracy & precision
			ON-SITE MEASUREMENTS
✓		+5.5/0 %	5. Results of on-site audit (± 10% or other value)
✓			6. Sampling system properly assembled
		N/A constant process	7. Based on pitot tube check, is proportional sampling required (more than 10% flow change)
	X	N/A	8. Dilution system check acceptable (if applicable)
✓			9. Sampling system leak check acceptable
	X	N/A	10. Proportional sampling properly conducted
✓			11. Constant rate sampling properly conducted
	X	N/A	12. Heater systems maintained at proper temperatures
✓			13. Proper number of samples & sampling time
✓			14. GC properly calibrated
✓			15. Duplicate injections had acceptable precision <5%
✓			16. Recording of pertinent process conditions during sample collection, samples properly identified, and calculations properly conducted
			POSTSAMPLING
	X	N/A	17. Results of off-site audit (± 10% or other value)
	X	N/A	18. GC properly calibrated
	X	N/A	19. Duplicate injections had acceptable precision <5%
	X	N/A	20. Adsorption efficiency acceptable, >90% on primary
	X	N/A	21. Desorption efficiency acceptable, >50% recovery
✓		on-site	22. Adequate peak resolution
✓		on-site 6%	23. Bags passed reaction check, less than 10% change
✓		on-site-nd	24. Bags passed retention check, less than 5% retained
✓		OK	25. Flowmeters recalibration acceptable
✓		OK	26. Temperature sensor recalibration acceptable

COMMENTS

The first run was repeated due to a posttest leak check that was unacceptable.

Figure 8.2. Method 18 checklist to be used by auditors.

Table 8.1. ACTIVITY MATRIX FOR AUDITING PROCEDURES

Apparatus	Acceptance limits	Frequency and method of measurement	Action if requirements are not met
Performance audit of analytical phase	Measured relative error of audit samples less than 10% (or other stated value) for both samples	Frequency: Once during every enforcement source test* Method: Measure audit samples and compare results to true values	Review operating technique and repeat audit
Data processing errors	Original and checked calculations agree within round-off error	Frequency: Once during every enforcement source test* Method: Independent calculations starting with recorded data	Check and correct all data for the audit period represented by the sampled data
Systems audit--observance of technique	Operational technique as described in this section of the Handbook	Frequency: Once during every enforcement source test* until experience gained, then every fourth test Method: Observation of techniques assisted by audit checklist, Figure 8.1	Explain to team their deviations from recommended techniques and note on Fig 8.1

*As defined here, a source test for enforcement of the NSPS comprises a series of runs at one source. Source test for purposes other than enforcement of NSPS may be audited at the frequency determined by the applicable group.

9.0 RECOMMENDED STANDARDS FOR ESTABLISHING TRACEABILITY

To achieve data of desired quality, two essential considerations are necessary: (1) the measurement process must bu in a state of statistical control at the time of the measurement, and (2) the systematic errors, when combined with the random variation (errors or measurment), must result in an acceptable uncertainty. As evidence in support of good quality data, it is necessary to perform qulaity control checks and independent audits of the measurement process; to document these data; and to use materials, instruments, and measurement procedures that can be traced to an apropriate standard of reference.

Data must be routinely obtained by repeat measurements of standar reference samples (primary, secondary, and/or working standards) and the establishment of a condition of process control. The working calibration standards should be traceable to standards of higher accuracy.

Audit samples (as discussed in Section 3.16.8) must be used to validate test results for compliance determination purposes and are recommendeed as an independent check on the measurement process when the method is performed for other purposes.

10.0 REFERENCE METHOD*

Since the initial promulgation of Method 18 in 1983 (48 FR, 48344 - 48360, 10/18/83), there have been a number of revisions and additions to the method. In the interest of consistency and clarity, the version of Method 18 reproduced here is from the most recent edition of the Code of Federal Regulations which incorporates all promulgated changes to this date.

METHOD 18—MEASUREMENT OF GASEOUS ORGANIC COMPOUND EMISSIONS BY GAS CHROMATOGRAPHY

Introduction

This method should not be attempted by persons unfamiliar with the performance characteristics of gas chromatography, nor by those persons who are unfamiliar with source sampling. Particular care should be exercised in the area of safety concerning choice of equipment and operation in potentially explosive atmospheres.

1. *Applicability and Principle*

1.1 Applicability. This method applies to the analysis of approximately 90 percent of the total gaseous organics emitted from an industrial source. It does not include techniques to identify and measure trace amounts of organic compounds, such as those found in building air and fugitive emission sources.

This method will not determine compounds that (1) are polymeric (high molecular weight), (2) can polymerize before analysis, or (3) have very low vapor pressures at stack or instrument conditions.

1.2 Principle.

The major organic components of a gas mixture are separated by gas chromatography (GC) and individually quantified by flame ionization, photoionization, electron capture, or other appropriate detection principles.

The retention times of each separated component are compared with those of known compounds under identical conditions. Therefore, the analyst confirms the identity and approximate concentrations of the organic emission components beforehand. With this information, the analyst then prepares or purchases commercially available standard mixtures to calibrate the GC under conditions identical to those of the samples. The analyst also determines the need for sample dilution to avoid detector saturation, gas stream filtration to eliminate particulate matter, and prevention of moisture condensation.

2. *Range and Sensitivity*

2.1 Range. The range of this method is from about 1 part per million (ppm) to the upper limit governed by GC detector saturation or column overloading. The upper limit can be extended by diluting the stack gases with an inert gas or by using smaller gas sampling loops.

2.2 Sensitivity. The sensitivity limit for a compound is defined as the minimum detectable concentration of that compound, or the concentration that produces a signal-to-noise ratio of three to one. The minimum detectable concentration is determined during the presurvey calibration for each compound.

3. *Precision and Accuracy*

Gas chromatographic techniques typically provide a precision of 5 to 10 percent relative standard deviation (RSD), but an experienced GC operator with a reliable instrument can readily achieve 5 percent RSD. For this method, the following combined GC/operator values are required.

(a) Precision. Duplicate analyses are within 5 percent of their mean value.

(b) Accuracy. Analysis results of prepared audit samples are within 10 percent of preparation values.

4. *Interferences*

Resolution interferences that may occur can be eliminated by appropriate GC column and detector choice or by shifting the retention times through changes in the column flow rate and the use of temperature programming.

The analytical system is demonstrated to be essentially free from contaminants by periodically analyzing blanks that consist of hydrocarbon-free air or nitrogen.

Sample cross-contamination that occurs when high-level and low-level samples or standards are analyzed alternately, is best dealt with by thorough purging of the GC sample loop between samples.

To assure consistent detector response, calibration gases are contained in dry air. To adjust gaseous organic concentrations when water vapor is present in the sample, water vapor concentrations are determined for those samples, and a correction factor is applied.

5. *Presurvey and Presurvey Sampling.*

Perform a presurvey for each source to be tested. Refer to Figure 18-1. Some of the information can be collected from literature surveys and source personnel. Collect gas samples that can be analyzed to confirm the identities and approximate concentrations of the organic emissions.

5.1 Apparatus. This apparatus list also applies to Sections 6 and 7.

---

*40 CFR 60, Appendix A, Method 18, July 1, 1987, pages 740 - 769.

5.1.1 Teflon Tubing. (Mention of trade names or specific products does not constitute endorsement by the U.S. Environmental Protection Agency.) Diameter and length determined by connection requirements of cylinder regulators and the GC. Additional tubing is necessary to connect the GC sample loop to the sample.

5.1.2 Gas Chromatograph. GC with suitable detector, columns, temperature-controlled sample loop and valve assembly, and temperature programable oven, if necessary. The GC shall achieve sensitivity requirements for the compounds under study.

5.1.3 Pump. Capable of pumping 100 ml/min. For flushing sample loop.

5.1.4 Flowmeters. To measure flow rates.

5.1.5 Regulators. Used on gas cylinders for GC and for cylinder standards.

5.1.6 Recorder. Recorder with linear strip chart is minimum acceptable. Integrator (optional) is recommended.

5.1.7 Syringes. 0.5-ml, 1.0- and 10-microliter sizes, calibrated, maximum accuracy (gas tight), for preparing calibration standards. Other appropriate sizes can be used.

5.1.8 Tubing Fittings. To plumb GC and gas cylinders.

5.1.9 Septums. For syringe injections.

5.1.10 Glass Jars. If necessary, clean-colored glass jars with Teflon-lined lids for condensate sample collection. Size depends on volume of condensate.

5.1.11 Soap Film Flow Meter. To determine flow rates.

5.1.12 Tedlar Bags. 10- and 50-liter capacity, for preparation of standards.

5.1.13 Dry Gas Meter with Temperature and Pressure Gauges. Accurate to ±2 percent, for perparation of gas standards.

5.1.14 Midget Impinger/Hot Plate Assembly. For preparation of gas standards.

5.1.15 Sample Flasks. For presurvey samples, must have gas-tight seals.

5.1.16 Adsorption Tubes. If necessary, blank tubes filled with necessary adsorbent (charcoal, Tenax, XAD-2, etc.) for presurvey samples.

5.1.17 Personnel Sampling Pump. Calibrated, for collecting adsorbent tube presurvey samples.

5.1.18 Dilution System. Calibrated, the dilution system is to be constructed following the specifications of an acceptable method.

5.1.19 Sample Probes. Pyrex or stainless steel, of sufficient length to reach centroid of stack, or a point no closer to the walls than 1 m.

5.1.20 Barometer. To measure barometric pressure.

5.2 Reagents.

5.2.1 Deionized Distilled Water.

5.2.2 Methylene Dichloride.

5.2.3 Calibration Gases. A series of standards prepared for every compound of interest.

5.2.4 Organic Compound Solutions. Pure (99.9 percent), or as pure as can reasonably be obtained, liquid samples of all the organic compounds needed to prepare calibration standards.

5.2.5 Extraction Solvents. For extraction of adsorbent tube samples in preparation for analysis.

5.2.6 Fuel. As recommended by the manufacturer for operation of the GC.

5.2.7 Carrier Gas. Hydrocarbon free, as recommended by the manufacturer for operation of the detector and compatability with the column.

5.2.8 Zero Gas. Hydrocarbon free air or nitrogen, to be used for dilutions, blank preparation, and standard preparation.

5.3 Sampling.

5.3.1 Collection of Samples with Glass Sampling Flasks. Presurvey samples can be collected in precleaned 250-ml double-ended glass sampling flasks. Teflon stopcocks, without grease, are preferred. Flasks should be cleaned as follows: Remove the stopcocks from both ends of the flasks, and wipe the parts to remove any grease. Clean the stopcocks, barrels, and receivers with methylene dichloride. Clean all glass ports with a soap solution, then rinse with tap and deionized distilled water. Place the flask in a cool glass annealing furnace and apply heat up to 500° C. Maintain at this temperature for 1 hour. After this time period, shut off and open the furnace to allow the flask to cool. Grease the stopcocks with stopcock grease and return them to the flask receivers. Purge the assembly with high-purity nitrogen for 2 to 5 minutes. Close off the stopcocks after purging to maintain a slight positive nitrogen pressure. Secure the stopcocks with tape.

Presurvey samples can be obtained either by drawing the gases into the previously evacuated flask or by drawing the gases into and purging the flask with a rubber suction bulb.

5.3.1.1 Evacuated Flask Procedure. Use a high-vacuum pump to evacuate the flask to the capacity of the pump; then close off the stopcock leading to the pump. Attach a 6-mm outside diameter (OD) glass tee to the flask inlet with a short piece of Teflon tubing. Select a 6-mm OD borosilicate sampling probe, enlarged at one end to a 12-mm OD and of sufficient length to reach the centroid of the duct to be sampled. Insert a glass wool plug in the enlarged end of the probe to remove particulate matter. Attach the other end of the probe to the tee with a short piece of Teflon tubing. Connect a rubber suction bulb to the third leg of the tee. Place the filter end of the probe at the centroid of the duct, or at a point no closer to the walls than 1 m, and purge the probe with the rubber suction bulb. After the probe is completely purged and filled with duct gases, open the stopcock to the grab flask until the pressure in the flask reaches duct pressure. Close off the stopcock, and remove the probe from the duct. Remove the tee from the flask and tape the stopcocks to prevent leaks during shipment. Measure and record the duct temperature and pressure.

5.3.1.2 Purged Flask Procedure. Attach one end of the sampling flask to a rubber suction bulb. Attach the other end to a 6-mm OD glass probe as described in Section

5.3.1.1. Place the filter end of the probe at the centroid of the duct, or at a point no closer to the walls than 1 m, and apply suction with the bulb to completely purge the probe and flask. After the flask has been purged, close off the stopcock near the suction bulb, and then close the stopcock near the probe. Remove the probe from the duct, and disconnect both the probe and suction bulb. Tape the stopcocks to prevent leakage during shipment. Measure and record the duct temperature and pressure.

5.3.2 Flexible Bag Procedure. Tedlar or aluminized Mylar bags can also be used to obtain the presurvey sample. Use new bags, and leak check them before field use. In addition, check the bag before use for contamination by filling it with nitrogen or air, and analyzing the gas by GC at high sensitivity. Experience indicates that it is desirable to allow the inert gas to remain in the bag about 24 hours or longer to check for desorption of organics from the bag. Follow the leak check and sample collection procedures given in Section 7.1.

5.3.3 Determination of Moisture Content. For combustion or water-controlled processes, obtain the moisture content from plant personnel or by measurement during the presurvey. If the source is below 59° C, measure the wet bulb and dry bulb temperatures, and calculate the moisture content using a psychrometric chart. At higher temperatures, use Method 4 to determine the moisture content.

5.4 Determination of Static Pressure. Obtain the static pressure from the plant personnel or measurement. If a type S pitot tube and an inclined manometer are used, take care to align the pitot tube 90° from the direction of the flow. Disconnect one of the tubes to the manometer, and read the static pressure; note whether the reading is positive or negative.

5.5 Collection of Presurvey Samples with Adsorption Tube. Follow Section 7.4 for presurvey sampling.

6. *Analysis Development*

6.1 Selection of GC Parameters.

6.1.1 Column Choice. Based on the initial contact with plant personnel concerning the plant process and the anticipated emissions, choose a column that provides good resolution and rapid analysis time. The choice of an appropriate column can be aided by a literature search, contact with manufacturers of GC columns, and discussion with personnel at the emission source.

Most column manufacturers keep excellent records of their products. Their technical service departments may be able to recommend appropriate columns and detector type for separating the anticipated compounds, and they may be able to provide information on interferences, optimum operating conditions, and column limitations.

Plants with analytical laboratories may also be able to provide information on appropriate analytical procedures.

6.1.2 Preliminary GC Adjustment. Using the standards and column obtained in Section 6.1.1, perform initial tests to determine appropriate GC conditions that provide good resolution and minimum analysis time for the compounds of interest.

6.1.3 Preparation of Presurvey Samples. If the samples were collected on an adsorbent, extract the sample as recommended by the manufacturer for removal of the compounds with a solvent suitable to the type of GC analysis. Prepare other samples in an appropriate manner.

6.1.4 Presurvey Sample Analysis. Before analysis, heat the presurvey sample to the duct temperature to vaporize any condensed material. Analyze the samples by the GC procedure, and compare the retention times against those of the calibration samples that contain the components expected to be in the stream. If any compounds cannot be identified with certainty by this procedure, identify them by other means such as GC/mass spectroscopy (GC/MS) or GC/infrared techniques. A GC/MS system is recommended.

Use the GC conditions determined by the procedures of Section 6.1.2 for the first injection. Vary the GC parameters during subsequent injections to determine the optimum settings. Once the optimum settings have been determined, perform repeat injections of the sample to determine the retention time of each compound. To inject a sample, draw sample through the loop at a constant rate (100 ml/min for 30 seconds). Be careful not to pressurize the gas in the loop. Turn off the pump and allow the gas in the sample loop to come to ambient pressure. Activate the sample valve, and record injection time, loop temperature, column temperature, carrier flow rate, chart speed, and attenuator setting. Calculate the retention time of each peak using the distance from injection to the peak maximum divided by the chart speed. Retention times should be repeatable within 0.5 seconds.

If the concentrations are too high for appropriate detector response, a smaller sample loop or dilutions may be used for gas samples, and, for liquid samples, dilution with solvent is appropriate. Use the standard curves (Section 6.3) to obtain an estimate of the concentrations.

Identify all peaks by comparing the known retention times of compounds expected to be in the retention times of peaks in the sample. Identify any remaining unidentified peaks which have areas larger than 5 percent of the total using a GC/MS, or estimation of possible compounds by their retention times compared to known compounds, with confirmation by further GC analysis.

6.2 Calibration Standards. Prepare or obtain enough calibration standards so that there are three different concentrations of each organic compound expected to be measured in the source sample. For each organic compound, select those concentrations that bracket the concentrations expected in the source samples. A calibration standard may contain more than one organic compound. If available, commercial cylinder gases may be used if their concentrations have been certified by direct analysis.

If samples are collected in adsorbent tubes (charcoal, XAD-2, Tenax, etc.), prepare or obtain standards in the same solvent used for the sample extraction procedure. Refer to Section 7.4.3.

Verify the stability of all standards for the time periods they are used. If gas standards are prepared in the laboratory, use one or more of the following procedures.

6.2.1 Preparation of Standards from High Concentration Cylinder Standards. Obtain enough high concentration cylinder standards to represent all the organic compounds expected in the source samples.

Use these high concentration standards to prepare lower concentration standards by dilution, as shown by Figures 18-5 and 18-6.

To prepare the diluted calibration samples, calibrated rotameters are normally used to meter both the high concentration calibration gas and the diluent gas. Other types of flowmeters and commercially available dilution systems can also be used.

Calibrate each flowmeter before use by placing it between the diluent gas supply and suitably sized bubble meter, spirometer, or wet test meter. Record all data shown on Figure 18-4. While it is desirable to calibrate the cylinder gas flowmeter with cylinder gas, the available quantity and cost may preclude it. The error introduced by using the diluent gas for calibration is insignificant for gas mixtures of up to 1,000 to 2,000 ppm of each organic component.

Once the flowmeters are calibrated, connect the flowmeters to the calibration and diluent gas supplies using 6-mm Teflon tubing. Connect the outlet side of the flowmeters through a connector to a leak-free Tedlar bag as shown in Figure 18-5. (See Section 7.1 for bag leak-check procedures.) Adjust the gas flow to provide the desired dilution, and fill the bag with sufficient gas for GC calibration. Be careful not to overfill and cause the bag to apply additional pressure on the dilution system. Record the flow rates of both flowmeters, and the laboratory temperature and atmospheric pressure. Calculate the concentration C_s in ppm of each organic in the diluted gas as follows:

$$C_s = \frac{10^6 \, (\bar{X} \, q_c)}{q_c + q_d} \qquad \text{Eq. 18-1}$$

where:
10^6 = Conversion to ppm.
X = Mole or volume fraction of the organic in the calibration gas to be diluted.
q_c = Flow rate of the calibration gas to be diluted.
q_d = Diluent gas flow rate.

Single-stage dilutions should be used to prepare calibration mixtures up to about 1:20 dilution factor.

For greater dilutions, a double dilution system is recommended, as shown in Figure 18-6. Fill the Tedlar bag with the dilute gas from the second stage. Record the laboratory temperature, barometric pressure, and static pressure readings. Correct the flow reading for temperature and pressure. Calculate the concentration C_s in ppm of the organic in the final gas mixture as follows:

$$C_s = 10^6 \, \bar{X} \left(\frac{q_{c1}}{q_{c1} + q_{d1}} \right) \left(\frac{q_{c2}}{q_{c2} + q_{d2}} \right) \qquad \text{Eq. 18-2}$$

Where:
10^6 = Conversion to ppm.
X = Mole or volume fraction of the organic in the calibration gas to be diluted.
q_{c1} = Flow rate of the calibration gas to be diluted in stage 1.
q_{c2} = Flow rate of the calibration gas to be diluted in stage 2.
q_{d1} = Flow rate of diluent gas in stage 1.
q_{d2} = Flow rate of diluent gas in stage 2.

Further details of the calibration methods for flowmeters and the dilution system can be found in Citation 21 in the Bibliography.

6.2.2 Preparation of Standards from Volatile Materials. Record all data shown on Figure 18-3.

6.2.2.1 Gas Injection Technique. This procedure is applicable to organic compounds that exist entirely as a gas at ambient conditions. Evacuate a 10-liter Tedlar bag that has passed a leak-check (see Section 7.1), and meter in 5.0 liters of air or nitrogen through a dry gas meter that has been calibrated in a manner consistent with the procedure described in Section 5.1.1 of Method 5. While the bag is filling use a 0.5-ml syringe to inject a known quantity of "pure" gas of the organic compound through the wall of the bag, or through a septum-capped tee at the bag inlet. Withdraw the syringe needle, and immediately cover the resulting hole with a piece of masking tape. In a like manner, prepare dilutions having other concentrations. Prepare a minimum of three concentrations. Place each bag on a smooth surface, and alternately depress opposite sides of the bag 50 times to mix the gases Record the average meter temperature and pressure, the gas volume and the barometric pressure. Record the syringe temperature and pressure before injection.

Calculate each organic standard concentration C_s in ppm as follows:

$$C_s = \frac{G_v \times 10^6 \, \frac{293}{T_s} \, \frac{P_s}{760}}{V_m \, Y \, \frac{293}{T_m} \, \frac{P_m}{760} \, 1000} = \frac{G_v \times 10^3 \, \frac{P_s}{T_s} \, \frac{T_m}{P_m}}{V_m \, Y} \qquad \text{Eq. 18-3}$$

where:
G_v = Gas volume or organic compound injected, ml.
10^6 = Conversion to ppm.
P_s = Absolute pressure of syringe before injection, mm Hg.
T_s = Absolute temperature of syringe before injection, °K.
V_m = Gas volume indicated by dry gas meter, liters.
Y = Dry gas meter calibration factor, dimensionless.
P_m = Absolute pressure of dry gas meter, mm Hg.
T_m = Absolute temperature of dry gas meter, °K.
1000 = Conversion factor, ml/liter.

6.2.2.2 *Liquid Injection Technique.* Use the equipment shown in Figure 18-8. Calibrate the dry gas meter as described in Section 6.2.2.1 with a wet test meter or a spirometer. Use a water manometer for the pressure gauge and glass, Teflon, brass, or stainless steel for all connections. Connect a valve to the inlet of the 50-liter Tedlar bag.

To prepare the standards, assemble the equipment as shown in Figure 18-8, and leak-check the system. Completely evacuate the bag. Fill the bag with hydrocarbon-free air, and evacuate the bag again. Close the inlet valve.

Turn on the hot plate, and allow the water to reach boiling. Connect the bag to the impinger outlet. Record the initial meter reading, open the bag inlet valve, and open the cylinder. Adjust the rate so that the bag will be completely filled in approximately 15 minutes. Record meter pressure and temperature, and local barometric pressure.

Allow the liquid organic to equilibrate to room temperature. Fill the 1.0- or 10-microliter syringe to the desired liquid volume with the organic. Place the syringe needle into the impinger inlet using the septum provided, and inject the liquid into the flowing air stream. Use a needle of sufficient length to permit injection of the liquid below the air inlet branch of the tee. Remove the syringe.

When the bag is filled, stop the pump, and close the bag inlet valve. Record the final meter reading, temperature, and pressure.

Disconnect the bag from the impinger outlet, and either set it aside for at least 1 hour, or massage the bag to insure complete mixing.

Measure the solvent liquid density at room temperature by accurately weighing a known volume of the material on an analytical balance to the nearest 1.0 milligram. A ground-glass stoppered 25-ml volumetric flask or a glass-stoppered specific gravity bottle is suitable for weighing. Calculate the result in terms of g/ml. As an alternative, literature values of the density of the liquid at 20 °C may be used.

Calculate each organic standard concentration C_s in ppm as follows:

$$C_s = \frac{\frac{L_v \rho}{M}(24.055 \times 10^6)}{V_m Y \frac{293}{T_m} \frac{P_m}{760} 1000} = 6.24 \times 10^4 \frac{L_v \rho T_m}{M V_m Y P_m}$$

Eq. 18-4

where:
L_v = Liquid volume of organic injected, µl.
ρ = Liquid organic density as determined, g/ml.
M = Molecular weight of organic, g/g-mole.
24.055 = Ideal gas molar volume at 293 °K and 760 mm Hg, liters/g-mole.
10^6 = Conversion to ppm.
1000 = Conversion factor, µl/ml.

6.3 Preparation of Calibration Curves. Establish proper GC conditions, then flush the sampling loop for 30 seconds at a rate of 100 ml/min. Allow the sample loop pressure to equilibrate to atmospheric pressure, and activate the injection valve. Record the standard concentration, attenuator factor, injection time, chart speed, retention time, peak area, sample loop temperature, column temperature, and carrier gas flow rate. Repeat the standard injection until two consecutive injections give area counts within 5 percent of their average. The average value multipled by the attenuator factor is then the calibration area value for the concentration.

Repeat this procedure for each standard. Prepare a graphical plot of concentration (C_s) versus the calibration area values. Perform a regression analysis, and draw the least squares line.

6.4 Relative Response Factors. The calibration curve generated from the standards for a single organic can usually be related to each of the individual GC response curves that are developed in the laboratory for all the compounds in the source. In the field, standards for that single organic can then be used to "calibrate" the GC for all the organics present. This procedure should first be confirmed in the laboratory by preparing and analyzing calibration standards containing multiple organic compounds.

6.5 Quality Assurance for Laboratory Procedures. Immediately after the preparation of the calibration curves and prior to the presurvey sample analysis, the analysis audit described in 40 CFR Part 61, Appendix C, Procedure 2: "Procedure for Field Auditing GC Analysis," should be performed. The information required to document the analysis of the audit samples has been included on the example data sheets shown in Figures 18-3 and 18-7. The audit analyses should agree with the audit concentrations within 10 percent. When available, the tester may obtain audit cylinders by contacting: U.S. Environmental Protection Agency, Environmental Monitoring Systems

Laboratory, Quality Assurance Division (MD-77), Research Triangle Park, North Carolina 27711. Audit cylinders obtained from a commercial gas manufacturer may be used provided that (a) the gas manufacturer certifies the audit cylinder in a manner similar to the procedure described in 40 CFR Part 61, Appendix B, Method 106, Section 5.2.3.1, and (b) the gas manufacturer obtains an independent analysis of the audit cylinders to verify this analysis. Independent analysis is defined as an analysis performed by an individual other than the individual who performs the gas manufacturer's analysis, while using calibration standards and analysis equipment different from those used for the gas manufacturer's analysis. Verification is complete and acceptable when the independent analysis concentration is within 5 percent of the gas manufacturer's concentration.

7. *Final Sampling and Analysis Procedure*

Considering safety (flame hazards) and the source conditions, select an appropriate sampling and analysis procedure (Section 7.1, 7.2, 7.3, or 7.4). In situations where a hydrogen flame is a hazard and no intrinsically safe GC is suitable, use the flexible bag collection technique or an adsorption technique. If the source temperature is below 100°C, and the organic concentrations are suitable for the detector to be used, use the direct interface method. If the source gases require dilution, use a dilution interface and either the bag sample or adsorption tubes. The choice between these two techniques will depend on the physical layout of the site, the source temperature, and the storage stability of the compounds if collected in the bag. Sample polar compounds by direct interfacing or dilution interfacing to prevent sample loss by adsorption on the bag.

7.1 Integrated Bag Sampling and Analysis.

7.1.1 Evacuated Container Sampling Procedure. In this procedure, the bags are filled by evacuating the rigid air-tight containers that hold the bags. Use a field sample data sheet as shown in Figure 18-10. Collect triplicate sample from each sample location.

7.1.1.1 Apparatus.

7.1.1.1.1 Probe. Stainless steel, Pyrex glass, or Teflon tubing probe, according to the duct temperature, with 6.4-mm OD Teflon tubing of sufficient length to connect to the sample bag. Use stainless steel or Teflon unions to connect probe and sample line.

7.1.1.1.2 Quick Connects. Male (2) and female (2) of stainless steel construction.

7.1.1.1.3 Needle Valve. To control gas flow.

7.1.1.1.4 Pump. Leakless Teflon-coated diaphragm-type pump or equivalent. To deliver at least 1 liter/min.

7.1.1.1.5 Charcoal Adsorption Tube. Tube filled with activated charcoal, with glass wool plugs at each end, to adsorb organic vapors.

7.1.1.1.6 Flowmeter. 0 to 500-ml flow range; with manufacturer's calibration curve.

7.1.1.2 Sampling Procedure. To obtain a sample, assemble the sample train as shown in Figure 18-9. Leak check both the bag and the container. Connect the vacuum line from the needle valve to the Teflon sample line from the probe. Place the end of the probe at the centroid of the stack, or at a point no closer to the walls than 1 m, and start the pump with the needle valve adjusted to yield a flow of 0.5 liter/minute. After allowing sufficient time to purge the line several times, connect the vacuum line to the bag, and evacuate until the rotameter indicates no flow. Then position the sample and vacuum lines for sampling, and begin the actual sampling, keeping the rate proportional to the stack velocity. As a precaution, direct the gas exiting the rotameter away from sampling personnel. At the end of the sample period, shut off the pump, disconnect the sample line from the bag, and disconnect the vacuum line from the bag container. Record the source temperature, barometric pressure, ambient temperature, sampling flow rate, and initial and final sampling time on the data sheet shown in Figure 18-10. Protect the Tedlar bag and its container from sunlight. When possible, perform the analysis within 2 hours of sample collection.

7.1.2 Direct Pump Sampling Procedure. Follow 7.1.1, except place the pump and needle valve between the probe and the bag. Use a pump and needle valve constructed of stainless steel or some other material not affected by the stack gas. Leak check the system, and then purge with stack gas before the connecting to the previously evacuated bag.

7.1.3 Explosion Risk Area Bag Sampling Procedure. Follow 7.1.1 except replace the pump with another evacuated can (see Figure 18-9a). Use this method whenever there is a possibility of an explosion due to pumps, heated probes, or other flame producing equipment.

7.1.4 Other Modified Bag Sampling Procedures. In the event that condensation is observed in the bag while collecting the sample and a direct interface system cannot be used, heat the bag during collection, and maintain it at a suitably elevated temperature during all subsequent operations. (Note: Take care to leak check the system prior to the dilutions so as not to create a potentially explosive atmosphere.) As an alternative, collect the sample gas, and simultaneously dilute it in the Tedlar bag.

In the first procedure, heat the box containing the sample bag to the source temperature, provided the components of the bag and the surrounding box can withstand this temperature. Then transport the bag as rapidly as possible to the analytical area while maintaining the heating, or cover the box with an insulating blanket. In the analytical area, keep the box heated to source temperature until analysis. Be sure that the method of heating the box and the control for the heating circuit are compatible with the safety restrictions required in each area.

To use the second procedure, prefill the Tedlar bag with a known quantity of inert gas. Meter the inert gas into the bag according to the procedure for the preparation of gas concentration standards of volatile liquid materials (Section 6.2.2.2), but eliminate the midget impinger section. Take the partly filled bag to the source, and meter the source gas into the bag through heated sampling lines and a heated flowmeter, or Teflon positive displacement pump. Verify the dilution factors periodically through dilution and analysis of gases of known concentration.

7.1.5 Analysis of Bag Samples.

7.1.5.1 Apparatus. Same as Section 5. A minimum of three gas standards are required.

7.1.5.2 Procedure. Establish proper GC operating conditions as described in Section 6.3, and record all data listed in Figure 18-7. Prepare the GC so that gas can be drawn through the sample valve. Flush the sample loop with gas from one of the three calibration mixtures, and activate the valve. Obtain at least two chromatograms for the mixture. The results are acceptable when the peak areas from two consecutive injections agree to within 5 percent of their average. If they do not, run additional analyses or correct the analytical techniques until this requirement is met. Then analyze the other two calibration mixtures in the same manner. Prepare a calibration curve as described in the same manner. Prepare a calibration curve as described in Section 6.3.

Analyze the source gas samples by connecting each bag to the sampling valve with a piece of Teflon tubing identified for that bag. Follow the specifications on replicate analyses specified for the calibration gases. Record the data listed in Figure 18-11. If certain items do not apply, use the notation "N.A." After all samples have been analyzed, repeat the analyses of the calibration gas mixtures, and generate a second calibration curve. Use an average of the two curves to determine the sample gas concentrations. If the two calibration curves differ by more than 5 percent from their mean value, then report the final results by comparison to both calibration curves.

7.1.6 Determination of Bag Water Vapor Content. Measure and record the ambient temperature and barometric pressure near the bag. From a water saturation vapor pressure table, determine and record the water vapor content as a decimal figure. (Assume the relative humidity to be 100 percent unless a lesser value is known.) If the bag has been maintained at an elevated temperature as described in Section 7.1.4, determine the stack gas water content by Method 4.

7.1.7 Quality Assurance. Immediately prior to the analysis of the stack gas samples, perform audit analyses as described in Section 6.5. The audit analyses must agree with the audit concentrations within 10 percent. If the results are acceptable, proceed with the analyses of the source samples. If they do not agree within 10 percent, then determine the reason for the discrepancy, and take corrective action before proceeding.

7.1.8 Emission Calculations. From the average calibration curve described in Section 7.1.5., select the value of C_s that corresponds to the peak area. Calculate the concentration C_c in ppm, dry basis, of each organic in the sample as follows:

$$C_c = \frac{C_s P_r T_i F_r}{P_i T_r (1-B_{ws})} \qquad \text{Eq. 18-5}$$

where:

C_s = Concentration of the organic from the calibration curve, ppm.

P_r = Reference pressure, the barometric pressure or absolute sample loop pressure recorded during calibration, mm Hg.

T_i = Sample loop temperature at the time of sample analysis, °K.

F_r = Relative response factor (if applicable, see Section 6.4).

P_i = Barometric or absolute sample loop pressure at time of sample analysis, mm Hg.

T_r = Reference temperature, the termperature of the sample loop recorded during calibration, °K.

B_{ws} = Water vapor content of the bag sample or stack gas, proportion by volume.

7.2 Direct Interface Sampling and Analysis Procedure. The direct interface procedure can be used provided that the moisture content of the gas does not interfere with the analysis procedure, the physical requirements of the equipment can be met at the site, and the source gas concentration is low enough that detector saturation is not a problem. Adhere to all safety requirements with this method.

7.2.1 Apparatus.

7.2.1.1 Probe. Constructed of stainless steel, Pyrex glass, or Teflon tubing as required by duct temperature, 6.4-mm OD, enlarged at duct end to contain glass wool plug. If necessary, heat the probe with heating tape or a special heating unit capable of maintaining duct temperature.

7.2.1.2 Sample Lines. 6.4-mm OD Teflon lines, heat-traced to prevent condensation of material.

7.2.1.3 Quick Connects. To connect sample line to gas sampling valve on GC instrument and to pump unit used to withdraw source gas. Use a quick connect or equivalent on the cylinder or bag containing calibration gas to allow connection of the calibration gas to the gas sampling valve.

7.2.1.4 Thermocouple Readout Device. Potentiometer or digital thermometer, to measure source temperature and probe temperature.

7.2.1.5 Heated Gas Sampling Valve. Of two-position, six-port design, to allow sample loop to be purged with source gas or to direct source gas into the GC instrument.

7.2.1.6 Needle Valve. To control gas sampling rate from the source.

7.2.1.7 Pump. Leakless Teflon-coated diaphragm-type pump or equivalent, capable of at least 1 liter/minute sampling rate.

7.2.1.8 Flowmeter. Of suitable range to measure sampling rate.

7.2.1.9 Charcoal Adsorber. To adsorb organic vapor collected from the source to prevent exposure of personnel to source gas.

7.2.1.10 Gas Cylinders. Carrier gas (helium or nitrogen), and oxygen and hydrogen for a flame ionization detector (FID) if one is used.

7.2.1.11 Gas Chromatograph. Capable of being moved into the field, with detector, heated gas sampling valve, column required to complete separation of desired components, and option for temperature programming.

7.2.1.12 Recorder/Integrator. To record results.

7.2.2 Procedure. To obtain a sample, assemble the sampling system as shown in Figure 18-12. Make sure all connections are tight. Turn on the probe and sample line heaters. As the temperature of the probe and heated line approaches the source temperature as indicated on the thermocouple readout device, control the heating to maintain a temperature of 0 to 3°C above the source temperature. While the probe and heated line are being heated, disconnect the sample line from the gas sampling valve, and attach the line from the calibration gas mixture. Flush the sample loop with calibration gas and analyze a portion of that gas. Record the results. After the calibration gas sample has been flushed into the GC instrument, turn the gas sampling valve to flush position, then reconnect the probe sample line to the valve. Place the inlet of the probe at the centroid of the duct, or at a point no closer to the walls than 1 m, and draw source gas into the probe, heated line, and sample loop. After thorough flushing, analyze the sample using the same conditions as for the calibration gas mixture. Repeat the analysis on an additional sample. Measure the peak areas for the two samples, and if they do not agree to within 5 percent of their mean value, analyze additional samples until two consecutive analyses meet this criteria. Record the data. After consistent results are obtained, remove the probe from the source and analyze a second calibration gas mixture. Record this calibration data and the other required data on the data sheet shown in Figure 18-11, deleting the dilution gas information.

(NOTE: Take care to draw all samples, calibration mixtures, and audits through the sample loop at the same pressure.)

7.2.3 Determination of Stack Gas Moisture Content. Use Method 4 to measure the stack gas moisture content.

7.2.4 Quality Assurance. Same as Section 7.1.7. Introduce the audit gases in the sample line immediately following the probe.

7.2.5 Emission Calculations. Same as Section 7.1.8.

7.3 Dilution Interface Sampling and Analysis Procedure. Source samples that contain a high concentration of organic materials may require dilution prior to analysis to prevent saturating the GC detector. The apparatus required for this direct interface procedure is basically the same as that described in the Section 7.2, except a dilution system is added between the heated sample line and the gas sampling valve. The apparatus is arranged so that either a 10:1 or 100:1 dilution of the source gas can be directed to the chromatograph. A pump of larger capacity is also required, and this pump must be heated and placed in the system between the sample line and the dilution apparatus.

7.3.1 Apparatus. The equipment required in addition to that specified for the direct interface system is as follows:

7.3.1.1 Sample Pump. Leakless Teflon-coated diaphragm-type that can withstand being heated to 120°C and deliver 1.5 liters/minute.

7.3.1.2 Dilution Pumps. Two Model A-150 Komhyr Teflon positive displacement type delivering 150 cc/minute, or equivalent. As an option, calibrated flowmeters can be used in conjunction with Teflon-coated diaphragm pumps.

7.3.1.3 Valves. Two Teflon three-way valves, suitable for connecting to 6.4-mm OD Teflon tubing.

7.3.1.4 Flowmeters. Two, for measurement of diluent gas, expected delivery flow rate to be 1,350 cc/min.

7.3.1.5 Diluent Gas with Cylinders and Regulators. Gas can be nitrogen or clean dry air, depending on the nature of the source gases.

7.3.1.6 Heated Box. Suitable for being heated to 120°C, to contain the three pumps, three-way valves, and associated connections. The box should be equipped with quick connect fittings to facilitate connection of: (1) The heated sample line from the probe, (2) the gas sampling valve, (3) the calibration gas mixtures, and (4) diluent gas lines. A schematic diagram of the components and connections is shown in Figure 18-13.

(NOTE: Care must be taken to leak check the system prior to the dilutions so as not to create a potentially explosive atmosphere.)

The heated box shown in Figure 18-13 is designed to receive a heated line from the probe. An optional design is to build a probe unit that attaches directly to the heated box. In this way, the heated box contains the controls for the probe heaters, or, if the box is placed against the duct being sampled, it may be possible to eliminate the probe heaters. In either case, a heated Teflon line is used to connect the heated box to the gas sampling valve on the chromatograph.

7.3.2 Procedure. Assemble the apparatus by connecting the heated box, shown in Figure 18-13, between the heated sample line from the probe and the gas sampling valve on the chromatograph. Vent the source gas from the gas sampling valve directly to the charcoal filter, eliminating the pump and rotameter. Heat the sample probe, sample line, and heated box. Insert the probe and source thermocouple to the centroid of the duct, or to a point no closer to the walls than 1 m. Measure the source temperature, and adjust all heating units to a temperature 0 to 3°C above this temperature. If this temperature is above the safe operating temperature of the Teflon components, adjust the heating to maintain a temperature high enough to prevent condensation of water and organic compounds. Verify the operation of the dilution system by analyzing a high concentration gas of known composition through either the 10:1 or 100:1 dilution stages, as appropriate. (If necessary, vary the flow of the diluent gas to obtain other dilution ratios.) Determine the concentration of the diluted calibration gas using the dilution factor and the calibration curves prepared in the laboratory. Record the pertinent data on the data sheet shown in Figure 18-11. If the data on the diluted calibration gas are not within 10 percent of the expected values, determine whether the chromatograph or the dilution system is in error, and correct it. Verify the GC operation using a low concentration standard by diverting the gas into the sample loop, bypassing the dilution system. If these analyses are not within acceptable limits, correct the dilution system to provide the desired dilution factors. Make this correction by diluting a high-concentration standard gas mixture to adjust the dilution ratio as required.

Once the dilution system and GC operations are satisfactory, proceed with the analysis of source gas, maintaining the same dilution settings as used for the standards. Repeat the analyses until two consecutive values do not vary by more than 5 percent from their mean value are obtained.

Repeat the analysis of the calibration gas mixtures to verify equipment operation. Analyze the two field audit samples using either the dilution system, or directly connect to the gas sampling valve as required. Record all data and report the results to the audit supervisor.

7.3.3 Determination of Stack Gas Moisture Content. Same as Section 7.2.3.

7.3.4 Quality Assurance. Same as Section 7.2.4.

7.3.5 Emission Calculations. Same as Section 7.2.5, with the dilution factor applied.

7.4 Adsorption Tube Procedure (Alternative Procedure). It is suggested that the tester refer to the National Institute of Occupational Safety and Health (NIOSH) method for the particular organics to be sampled. The principal interferent will be water vapor. If water vapor is present at concentrations above 3 percent, silica gel should be used in front of the charcoal. Where more than one compound is present in the emissions, then develop relative adsorptive capacity information.

7.4.1 Additional Apparatus. In addition to the equipment listed in the NIOSH method for the particular organic(s) to be sampled, the following items (or equivalent) are suggested.

7.4.1.1 Probe (Optional). Borosilicate glass or stainless steel, approximately 6-mm ID, with a heating system if water condensation is a problem, and a filter (either in-stack or out-stack heated to stack temperature) to remove particulate matter. In most instances, a plug of glass wool is a satisfactory filter.

7.4.1.2 Flexible Tubing. To connect probe to adsorption tubes. Use a material that exhibits minimal sample adsorption.

7.4.1.3 Leakless Sample Pump. Flow controlled, constant rate pump, with a set of limiting (sonic) orifices to provide pumping rates from approximately 10 to 100 cc/min.

7.4.1.4 Bubble-Tube Flowmeter. Volume accuracy within ± 1 percent, to calibrate pump.

7.4.1.5 Stopwatch. To time sampling and pump rate calibration.

7.4.1.6 Adsorption Tubes. Similar to ones specified by NIOSH, except the amounts of adsorbent per primary/backup sections are 800/200 mg for charcoal tubes and 1040/260 mg for silica gel tubes. As an alternative, the tubes may contain a porous polymer adsorbent such as Tenax GC or XAD-2.

7.4.1.7 Barometer. Accurate to 5 mm Hg, to measure atmospheric pressure during sampling and pump calibration.

7.4.1.8 Rotameter. 0 to 100 cc/min, to detect changes in flow rate during sampling.

7.4.2 Sampling and Analysis. It is suggested that the tester follow the sampling and analysis portion of the respective NIOSH method section entitled "Procedure." Calibrate the pump and limiting orifice flow rate through adsorption tubes with the bubble tube flowmeter before sampling. The sample system can be operated as a "recirculating loop" for this operation. Record the ambient temperature and barometric pressure. Then, during sampling, use the rotameter to verify that the pump and orifice sampling rate remains constant.

Use a sample probe, if required, to obtain the sample at the centroid of the duct, or at a point no closer to the walls than 1 m. Minimize the length of flexible tubing between the probe and adsorption tubes. Several adsorption tubes can be connected in series, if the extra adsorptive capacity is needed. Provide the gas sample to the sample system at a pressure sufficient for the limiting orifice to function as a sonic orifice. Record the total time and sample flow rate (or the number of pump strokes), the barometric pressure, and ambient temperature. Obtain a total sample volume commensurate with the expected concentration(s) of the volatile organic(s) present, and recommended sample loading factors (weight sample per weight adsorption media). Laboratory tests prior to actual sampling may be necessary to predetermine this volume. When more than one organic is present in the emissions, then develop relative adsorptive capacity information. If water vapor is present in the sample at concentrations above 2 to 3 percent, the adsorptive capacity may be severe-

ly reduced. Operate the gas chromatograph according to the manufacture's instructions. After establishing optimum conditions, verify and document these conditions during all operations. Analyze the audit samples (see Section 7.4.4.3), then the emission samples. Repeat the analysis of each sample until the relative deviation of two consecutive injections does not exceed 5 percent.

7.4.3 Standards and Calibration. The standards can be prepared according to the respective NIOSH method. Use a minimum of three different standards; select the concentrations to bracket the expected average sample concentration. Perform the calibration before and after each day's sample analyses. Prepare the calibration curve by using the least squares method.

7.4.4 Quality Assurance.

7.4.4.1 Determination of Desorption Efficiency. During the testing program, determine the desorption efficiency in the expected sample concentration range for each batch of adsorption media to be used. Use an internal standard. A minimum desorption efficiency of 50 percent shall be obtained. Repeat the desorption determination until the relative deviation of two consecutive determinations does not exceed 5 percent. Use the average desorption efficiency of these two consecutive determinations for the correction specified in Section 7.4.4.5. If the desorption efficiency of the compound(s) of interest is questionable under actual sampling conditions, use of the Method of Standard Additions may be helpful to determine this value.

7.4.4.2 Determination of Sample Collection Efficiency. For the source samples, analyze the primary and backup portions of the adsorption tubes separately. If the backup portion exceeds 10 percent of the total amount (primary and backup), repeat the sampling with a larger sampling portion.

7.4.4.3 Analysis Audit. Immediately before the sample analyses, analyze the two audits in accordance with Section 7.4.2. The analysis audit shall agree with the audit concentration within 10 percent.

7.4.4.4 Pump Leak Checks and Volume Flow Rate Checks. Perform both of these checks immediately after sampling with all sampling train components in place. Perform all leak checks according to the manufacturer's instructions, and record the results. Use the bubble-tube flowmeter to measure the pump volume flow rate with the orifice used in the test sampling, and the result. If it has changed by more than 5 but less than 20 percent, calculate an average flow rate for the test. If the flow rate has changed by more than 20 percent, recalibrate the pump and repeat the sampling.

7.4.4.5 Calculations. All calculations can be performed according to the respective NIOSH method. Correct all sample volumes to standard conditions. If a sample dilution system has been used, multiply the results by the appropriate dilution ratio. Correct all results by dividing by the desorption efficiency (decimal value). Report results as ppm by volume, dry basis.

7.5 Reporting of Results. At the completion of the field analysis portion of the study, ensure that the data sheets shown in Figure 18-11 have been completed. Summarize this data on the data sheets shown in Figure 18-15.

8. *Bibliography*

1. American Society for Testing and Materials. C_1 Through C_6 Hydrocarbons in the Atmosphere by Gas Chromatography. ASTM D 2820-72, Part 23. Philadelphia, Pa. 23:950-958. 1973.

2. Corazon, V. V. Methodology for Collecting and Analyzing Organic Air Pollutants. U.S. Environmental Protection Agency. Publication No. EPA-600/2-79-042. February 1979.

3. Dravnieks, A., B. K. Krotoszynski, J. Whitfield, A. O'Donnell, and T. Burgwald. Environmental Science and Technology. *5*(12):1200-1222. 1971.

4. Eggertsen, F. T., and F. M. Nelsen. Gas Chromatographic Analysis of Engine Exhaust and Atmosphere. Analytical Chemistry. *30*(6): 1040-1043. 1958.

5. Fairheller, W. R., P. J. Marn, D. H. Harris, and D. L. Harris. Technical Manual for Process Sampling Strategies for Organic Materials. U.S. Environmental Protection Agency. Research Triangle Park, NC. Publication No. EPA 600/2-76-122. April 1976. 172 p.

6. FR, 39 FR 9319-9323. 1974.

7. FR, 39 FR 32857-32860. 1974.

8. FR, 41 FR 23069-23072 and 23076-23090. 1976.

9. FR, 41 FR 46569-46571. 1976.

10. FR, 42 FR 41771-41776. 1977.

11. Fishbein, L. Chromatography of Environmental Hazards, Volume II. Elsevier Scientific Publishing Company. NY, NY. 1973.

12. Hamersma, J. W., S. L. Reynolds, and R. F. Maddalone. EPA/IERL-RTP Procedures Manual: Level 1 Environmental Assessment. U.S. Environmental Protection Agency. Research Triangle Park, NC. Publication No. EPA 600/276-160a. June 1976. 130 p.

13. Harris, J. C., M. J. Hayes, P. L. Levins, and D. B. Lindsay. EPA/IERL-RTP Procedures for Level 2 Sampling and Analysis of Organic Materials. U.S. Environmental Protection Agency. Research Triangle Park, NC. Publication No. EPA 600/7-79-033. February 1979. 154 p.

14. Harris, W. E., H. W. Habgood. Programmed Temperature Gas Chromatography. John Wiley & Sons, Inc. New York. 1966.

15. Intersociety Committee. Methods of Air Sampling and Analysis. American Health Association. Washington, DC. 1972.

16. Jones, P. W., R. D. Grammar, P. E. Strup, and T. B. Stanford. Environmental Science and Technology. *10*:806-810. 1976.

17. McNair Han Bunelli, E. J. Basic Gas Chromatography. Consolidated Printers. Berkeley. 1969.

18. Nelson, G. O. Controlled Test Atmospheres, Principles and Techniques. Ann Arbor. Ann Arbor Science Publishers. 1971. 247 p.

19. NIOSH Manual of Analytical Methods, Volumes 1, 2, 3, 4, 5, 6, 7. U.S. Department of Health and Human Services National Institute for Occupational Safety and Health. Center for Disease Control. 4676 Columbia Parkway, Cincinnati, Ohio 45226. April 1977-August 1981. May be available from the Superintendent of Documents, Government Printing Office, Washington, DC 20402. Stock Number/Price: Volume 1—017-033-00267-3/$13, Volume 2—017-033-00260-6/$11, Volume 3—017-033-00261-4/$14, Volume 4—017-033-00317-3/$7.25, Volume 5—017-033-00349-1/$10, Volume 6—017-033-00369-6/$9, and Volume 7—017-033-00396-5/$7. Prices subject to change. Foreign orders add 25 percent.

20. Schuetzle, D., T. J. Prater, and S. R. Ruddell. Sampling and Analysis of Emissions from Stationary Sources; I. Odor and Total Hydrocarbons. Journal of the Air Pollution Control Association. *25*(9):925-932. 1975.

21. Snyder, A. D., F. N. Hodgson, M. A. Kemmer and J. R. McKendree. Utility of Solid Sorbents for Sampling Organic Emissions from Stationary Sources. U.S. Environmental Protection Agency. Research Triangle Park, NC Publication No. EPA 600/2-76-201. July 1976. 71 p.

22. Tentative Method for Continuous Analysis of Total Hydrocarbons in the Atmosphere. Intersociety Committee, American Public Health Association. Washington, DC 1972. p. 184-186.

23. Zwerg, G., CRC Handbook of Chromatography, Volumes I and II. Sherma, Joseph (ed.). CRC Press. Cleveland. 1972.

I. Name of company _____ Date _____
Address _____
_____
Contacts _____ Phone _____
_____ _____
Process to be sampled _____
_____
_____
Duct or vent to be sampled _____
_____

II. Process description _____
_____
_____
_____
_____
Raw material _____
_____
_____
Products _____
_____
_____
Operating cycle
Check: Batch _____ Continuous _____ Cyclic _____
Timing of batch or cycle _____
Best time to test _____

Figure 18-1. Preliminary survey data sheet.

Components to be analyzed	Expected concentration

Suggested chromatographic column _____
_____
Column flow rate ____ml/min Head pressure____ mm Hg
Column temperature:
Isothermal _____°C
Programmed from _____°C to ____°C at ____°C/min
Injection port/sample loop temperature _____°C
Detector temperature _____°C
Detector flow rates: Hydrogen _____ml/min.
head pressure____ mm Hg
Air/Oxygen _____ml/min,
head pressure____ mm Hg
Chart speed _____ inches/minute
Compound data:

Compound	Retention time	Attenuation

Figure 18-2. Chromatographic conditions data sheet.

Preparation of Standards in Tedlar Bags and Calibration Curve

Standards Preparation Data:	Mixture #1	Standards Mixture #2	Mixture #3
Organic: _____			
Bag number or identification			
Dry gas meter calibration factor			
Final meter reading (liters)			
Initial meter reading (liters)			
Metered volume (liters)			
Average meter temperature (°K)			
Average meter pressure, gauge (mm Hg)			
Average atmospheric pressure (mm Hg)			
Average meter pressure, absolute (mm Hg)			
Syringe temperature (°K) (Section 6.2.2.1)			
Syringe pressure, absolute (mm Hg) (Section 6.2.2.1)			
Volume of gas in syringe (ml) (Section 6.2.2.1)			
Density of liquid organic (g/ml) (Section 6.2.2.2)			
Volume of liquid in syringe (µl) (Section 6.2.2.2)			
GC Operating Conditions:			
Sample loop volume (ml)			
Sample loop temperature (°C)			
Carrier gas flow rate (ml/min)			
Column temperature			
Initial (°C)			
Rate change (°C/min)			
Final (°C)			
Organic Peak Identification and Calculated Concentrations:			
Injection time (24-hr clock)			
Distance to peak (cm)			
Chart speed (cm/min)			
Organic retention time (min)			
Attenuation factor			
Peak height (mm)			
Peak area (mm^2)			
Peak area x attenuation factor (mm^2)			
Calculated concentration (ppm) (Equation 18-3 or 18-4)			

Plot peak area x attenuation factor against calculated concentration to obtain calibration curve.

Figure 18-3. Standards prepared in Tedlar bags and calibration curve.

Flowmeter Calibration

Flowmeter number or identification _____

Flowmeter type _____

Calibration device (x): Bubble meter___ Spirometer___ Wet test meter___

Readings at laboratory conditions:

Laboratory temperature (T_{lab}) _____ °K

Laboratory barometric pressure (P_{lab}) _____ mm Hg

Flow data:

Flowmeter reading (as marked)	Flowmeter temp. (°K)	Flowmeter pressure (absolute)	Calibration device time (min)	Calibration device gas volume[a]	Calibration device flow rate[b]

a = Volume of gas measured by calibration device, corrected to standard conditions (liters).

b = Calibration device gas volume/time.

Plot flowmeter reading against flow rate (standard conditions), and draw a smooth curve. If the flowmeter being calibrated is a rotameter or other flow device that is viscosity dependent, it may be necessary to generate a "family" of calibration curves that cover the operating pressure and temperature ranges of the flowmeter.

While the following technique should be verified before application, it may be possible to calculate flow rate readings for rotameters at standard conditions Q_{std} as follows:

$$Q_{std} = Q_{lab}\left(\frac{760 \times T_{lab}}{P_{lab} \times 293}\right)^{1/2}$$

Flow rate (laboratory conditions)	Flow rate (standard conditions)

Figure 18-4. Flowmeter calibration.

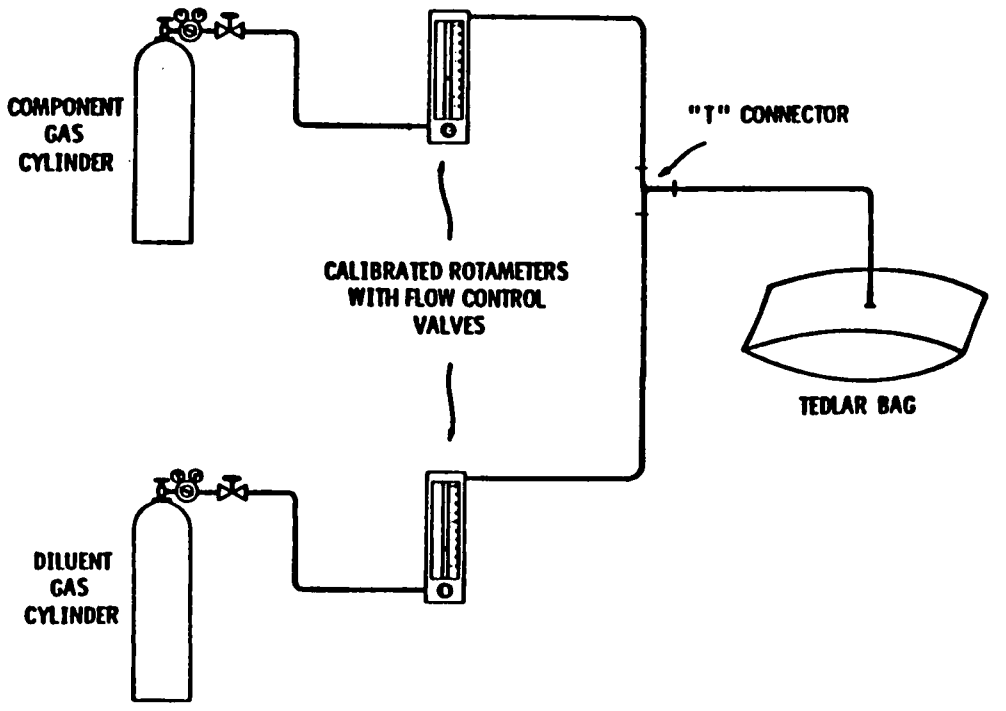

Figure 18-5. Single-stage calibration gas dilution system.

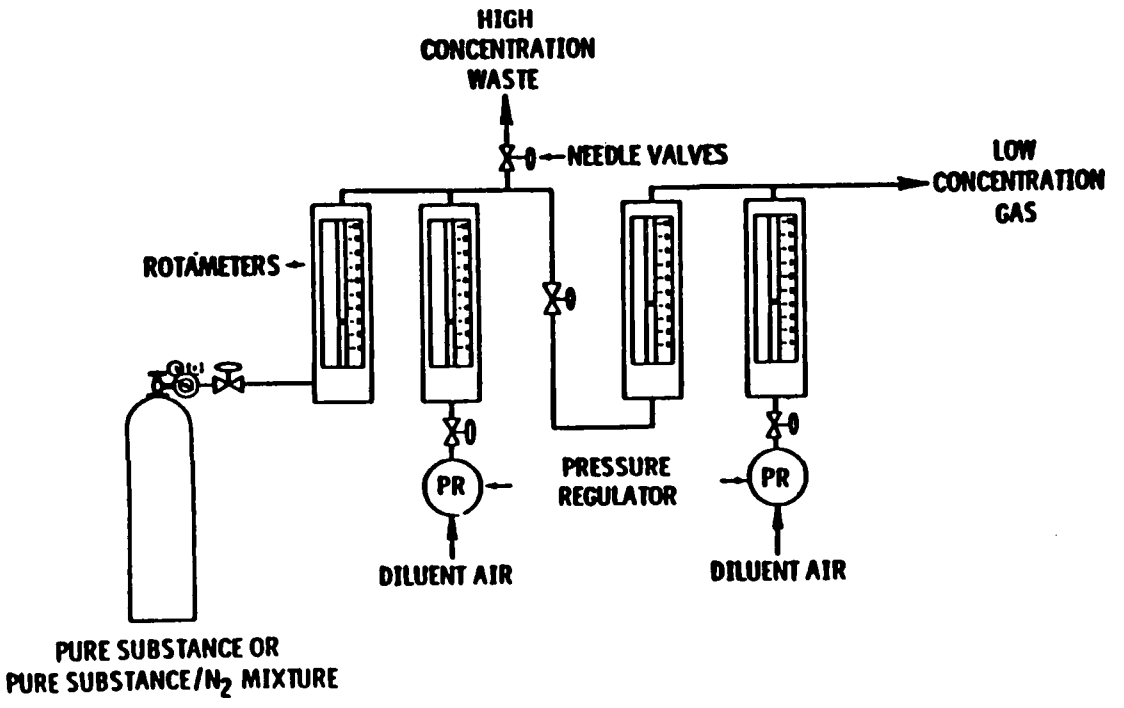

Figure 18-6. Two-stage dilution apparatus.

Preparation of Standards by Dilution of Cylinder Standard

Cylinder standard: Organic _____ Certified concentration _____ ppm

Standards Preparation Data: Date _____

Stage 1	Mixture 1	Mixture 2	Mixture 3
Standard gas flowmeter reading	_____	_____	_____
Diluent gas flowmeter reading	_____	_____	_____
Laboratory temperature (°K)	_____	_____	_____
Barometric pressure (mm Hg)	_____	_____	_____
Flowmeter gage pressure (mm Hg)	_____	_____	_____
Flow rate cylinder gas at standard conditions (ml/min)	_____	_____	_____
Flow rate diluent gas at standard conditions (ml/min)	_____	_____	_____
Calculated concentration (ppm)	_____	_____	_____
Stage 2 (if used)			
Standard gas flowmeter reading	_____	_____	_____
Diluent gas flowmeter reading	_____	_____	_____
Flow rate stage 1 gas at standard conditions (ml/min)	_____	_____	_____
Flow rate diluent gas at standard conditions (ml/min)	_____	_____	_____
Calculated concentration (ppm)	_____	_____	_____
GC Operating Conditions:			
Sample loop volume (ml)	_____	_____	_____
Sample loop temperature (°C)	_____	_____	_____
Carrier gas flow rate (ml/min)	_____	_____	_____
Column temperature:			
Initial (°C)	_____	_____	_____
Program rate (°C/min)	_____	_____	_____
Final (°C)	_____	_____	_____
Organic Peak Identification and Calculated Concentrations:			
Injection time (24-hr clock)	_____	_____	_____
Distance to peak (cm)	_____	_____	_____
Chart speed (cm/min)	_____	_____	_____
Retention time (min)	_____	_____	_____
Attenuation factor	_____	_____	_____
Peak area (mm^2)	_____	_____	_____
Peak area x attenuation factor	_____	_____	_____

Plot peak area x attenuation factor against calculated concentration to obtain calibration curve.

Figure 18-7. Standards prepared by dilution of cylinder standard.

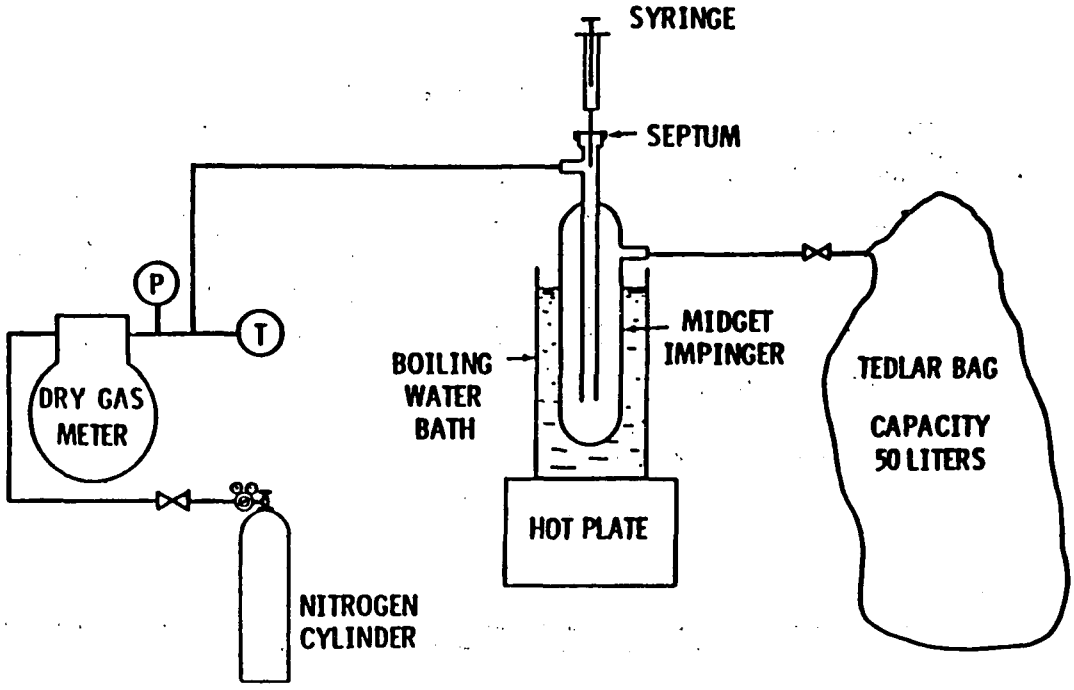

Figure 18-8. Apparatus for preparation of liquid materials.

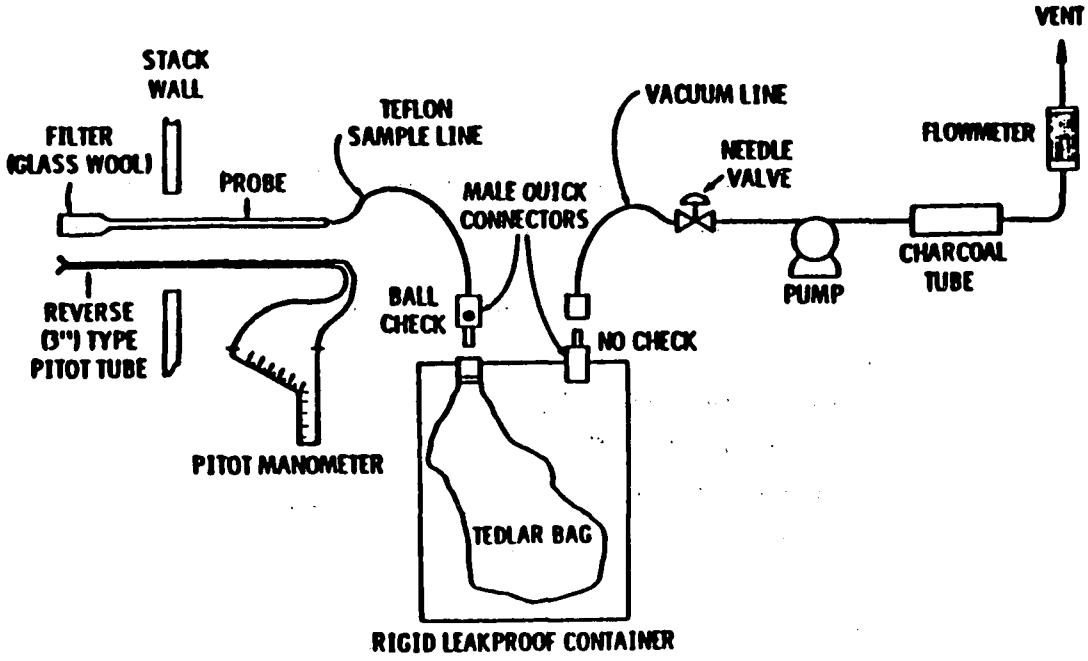

Figure 18-9. Integrated bag sampling train.

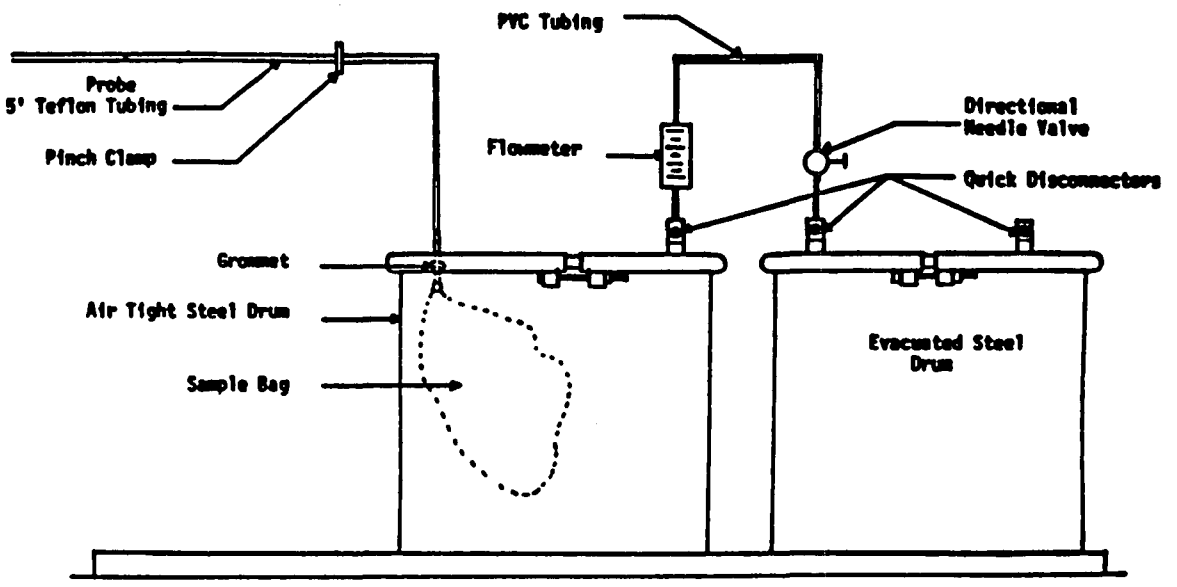

Figure 18-9a. Explosion risk gas sampling method.

Plant_____ Date_____

Site_____

	Sample 1	Sample 2	Sample 3
Source temperature (°C)	_____	_____	_____
Barometric pressure (mm Hg)	_____	_____	_____
Ambient temperature (°C)	_____	_____	_____
Sample flow rate (appr.)	_____	_____	_____
Bag number	_____	_____	_____
Start time	_____	_____	_____
Finish time	_____	_____	_____

Figure 18-10. Field sample data sheet - Tedlar bag collection method.

Plant_____ Date_____
Location_____

1. General information

Source temperature (°C)	_____
Probe temperature (°C)	_____
Ambient temperature (°C)	_____
Atmospheric pressure (mm)	_____
Source pressure (°Hg)	_____
Absolute source pressure (mm)	_____
Sampling rate (liter/min)	_____
Sample loop volume (ml)	_____
Sample loop temperature (°C)	_____
Columnar temperature:	
Initial (°C)/time (min)	_____
Program rate (°C/min)	_____
Final (°C)/ time (min)	_____
Carrier gas flow rate (ml/min)	_____
Detector temperature (°C)	_____
Injection time (24-hour basis)	_____
Chart speed (mm/min)	_____
Dilution gas flow rate (ml/min)	_____
Dilution Gas used (symbol)	_____
Dilution ratio	_____

Figure 18-11. Field analysis data sheets.

2. Field Analysis Data - Calibration Gas

Run No._____ Time_____

Components	Area	Attenuation	A x A Factor	Conc. (ppm)

Run No._____ Time_____

Components	Area	Attenuation	A x A Factor	Conc. (ppm)

Run No._____ Time_____

Components	Area	Attenuation	A x A Factor	Conc. (ppm)

Figure 18-11 (continued). Field analysis data sheets.

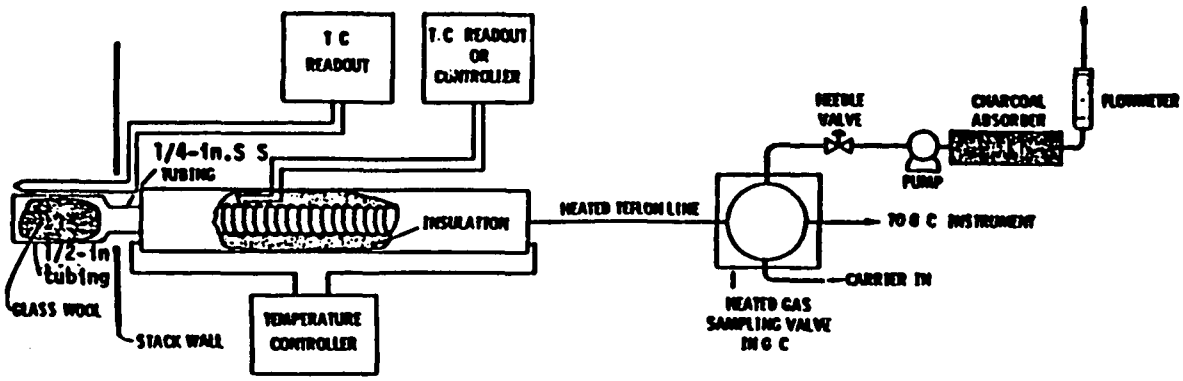

Figure 18-12. Direct interface sampling system.

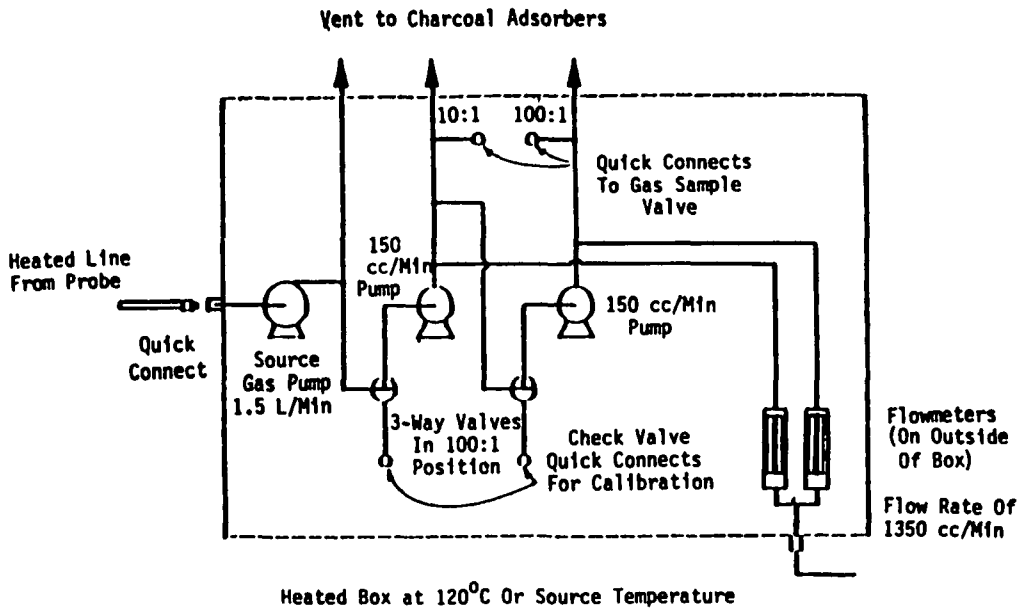

Figure 18-13. Schematic diagram of the heated box required for dilution of sample gas.

GASEOUS ORGANIC SAMPLING AND ANALYSIS CHECK LIST

(Respond with initials or number as appropriate)

		Date
1. Presurvey data:		
A. Grab sample collected	☐	.....
B. Grab sample analyzed for composition	☐	.....
Method GC	☐	☐
GC/MS	☐	☐
Other	☐	☐
C. GC-FID analysis performed	☐	.....
2. Laboratory calibration data:		
A. Calibration curves prepared	☐	.....
Number of components	☐	☐
Number of concentrations/ component (3 required)	☐	☐
B. Audit samples (optional):		
Analysis completed	☐	.....
Verified for concentration	☐	.....
OK obtained for field work	☐	.....
3. Sampling procedures:		
A. Method:		
Bag sample	☐	☐
Direct interface	☐	☐
Dilution interface	☐	☐
B. Number of samples collected	☐	.....
4. Field analysis:		
A. Total hydrocarbon analysis performed	☐	.....
B. Calibration curve prepared	☐	.....
Number of components	☐	☐
Number of concentrations per component (3 required)	☐	☐

Figure 18-14. Sampling and analysis check.

GASEOUS ORGANIC SAMPLING AND ANALYSIS DATA

Plant——————————————
Date——————————————
Location——————————————

	Source sample 1	Source sample 2	Source sample 3
1. General information:			
Source temperature (°C)			
Probe temperature (°C)			
Ambient temperature (°C)			
Atmospheric pressure (mm Hg)			
Source pressure (mm Hg)			
Sampling rate (ml/min)			
Sample loop volume (ml)			
Sample loop temperature (°C)			
Sample collection time (24-hr basis)			
Column temperature:			
Initial (°C)			
Program rate (°C/min)			
Final (°C)			
Carrier gas flow rate (ml/min)			
Detector temperature (°C)			
Chart speed (cm/min)			
Dilution gas flow rate (ml/min)			
Diluent gas used (symbol)			
Dilution ratio			

Performed by (signature): .....

Date: .....

Figure 18-14. Sampling and analysis sheet.

APPENDIX C—QUALITY ASSURANCE PROCEDURES *

Procedure 1—Determination of Adequate Chromatographic Peak Resolution

In this method of dealing with resolution, the extent to which one chromatographic peak overlaps another is determined.

For convenience, consider the range of the elution curve of each compound as running from -2σ to $+2\sigma$. This range is used in other resolution criteria, and it contains 95.45 percent of the area of a normal curve. If two peaks are separated by a known distance, b, one can determine the fraction of the area of one curve that lies within the range of the other. The extent to which the elution curve of a contaminant compound overlaps the curve of a compound that is under analysis is found by integrating the contaminant curve over the limits $b-2\sigma_s$ to $b+2\sigma_s$, where σ_s is the standard deviation of the sample curve.

This calculation can be simplified in several ways. Overlap can be determined for curves of unit area; then actual areas can be introduced. Desired integration can be resolved into two integrals of the normal distribution function for which there are convenient calculation programs and tables. An example would be Program 15 in Texas Instruments Program Manual ST1, 1975, Texas Instruments, Inc., Dallas, Texas 75222.

In judging the suitability of alternate GC columns or the effects of altering chromatographic conditions, one can employ the area overlap as the resolution parameter with a specific maximum permissible value.

The use of Gaussian functions to describe chromatographic elution curves is widespread. However, some elution curves are highly asymmetric. In cases where the sample peak is followed by a contaminant that has a leading edge that rises sharply but the curve then tails off, it may be possible to define an effective width for t_c as "twice the distance from the leading edge to a perpendicular line through the maxim of the contaminant curve, measured along a perpendicular bisection of that line."

Procedure 2—Procedure for Field Auditing GC Analysis

Responsibilities of audit supervisor and analyst at the source sampling site include the following:

A. The audit supervisor verifies that audit cylinders are stored in a safe location both before and after the audit to prevent vandalism.

B. At the beginning and conclusion of the audit, the analyst records each cylinder number and pressure. An audit cylinder is never analyzed when the pressure drops below 200 psi.

C. During the audit, the analyst performs a minimum of two consecutive analyses of each audit cylinder gas. The audit must be conducted to coincide with the analysis of source test samples, normally immediately after GC calibration and prior to sample analyses.

D. At the end of audit analyses, the audit supervisor requests the calculated concentrations from the analyst and compares the results with the actual audit concentrations. If each measured concentration agrees with the respective actual concentration within ±10 percent, he directs the analyst to begin analyzing source samples. Audit supervisor judgment and/or supervisory policy determine action when agreement is not within ±10 percent. When a consistent bias in excess of 10 percent is found, it may be possible to proceed with the sample analysis, with a corrective factor to be applied to the results at a later time. However, every attempt should be made to locate the cause of the discrepancy, as it may be misleading. The audit supervisor records each cylinder number, cylinder pressure (at the end of the audit), and all calculated concentrations. The individual being audited must not under any circumstance be told actual audit concentrations until calculated concentrations have been submitted to the audit supervisor.

*40 CFR 61, Appendix C, Quality Assurance Procedures, July 1, 1987, pages 157 - 161.

$$\frac{1}{\sqrt{2\pi}\sigma_c}\int_{b-2\sigma_s}^{b+2\sigma_s} e^{\left(\frac{-t_c^2}{2\sigma_c}\right)}dt = \frac{1}{\sqrt{2\pi}}\int_{\frac{b-2\sigma_s}{\sigma_c}}^{\infty} e^{\left(\frac{-x^2}{2}\right)}dx - \frac{1}{\sqrt{2\pi}}\int_{\frac{b+2\sigma_s}{\sigma_c}}^{\infty} e^{\left(\frac{-x^2}{2}\right)}dx$$

The following calculation steps are required:*

1. $2\sigma_s = t_s/\sqrt{2 \ln 2}$
2. $\sigma_c = t_c/2\sqrt{2 \ln 2}$
3. $x_1 = (b-2\sigma_s)/\sigma_c$
4. $x_2 = (b+2\sigma_s)/\sigma_c$
5. $Q(x_1) = \frac{1}{\sqrt{2\pi}}\int_{x_1}^{\infty} e^{\left(\frac{-x^2}{2}\right)}dx$
6. $Q(x_2) = \frac{1}{\sqrt{2\pi}}\int_{x_2}^{\infty} e^{\left(\frac{-x^2}{2}\right)}dx$
7. $I_o = Q(x_1) - Q(x_2)$
8. $A_o = I_o A_c/A_s$
9. Percentage overlap = $A_o \times 100$,

where:

A_s = Area of the sample peak of interest determined by electronic integration or by the formula $A_s = h_s t_s$.

A_c = Area of the contaminant peak, determined in the same manner as A_s.

b = Distance on the chromatographic chart that separates the maxima of the two peaks.

H_s = Peak height of the sample compound of interest, measured from the average value of the baseline to the maximum of the curve.

t_s = Width of sample peak of interest at 1/2 peak height.

t_c = Width of the contaminant peak at 1/2 of peak height.

σ_s = Standard deviation of the sample compound of interest elution curve.

σ_c = Standard deviation of the contaminant elution curve.

$Q(x_1)$ = Integral of the normal distribution function from x_1 to infinity.

$Q(x_2)$ = Integral of the normal distribution function from x_2 to infinity.

I_o = Overlap integral.

A_o = Area overlap fraction.

*In most instances, $Q(x_2)$ is very small and may be neglected.

FIELD AUDIT REPORT

Part A.—To be filled out by organization supplying audit cylinders.

1. Organization supplying audit sample(s) and shipping address

2. Audit supervisor, organization, and phone number

3. Shipping instructions: Name, Address, Attention

4. Guaranteed arrival date for cylinders——

5. Planned shipping date for cylinders——

6. Details on audit cylinders from last analysis

	Low conc.	High conc.
a. Date of last analysis		
b. Cylinder number		
c. Cylinder pressure, psi		
d. Audit gas(es)/balance gas		
e. Audit gas(es), ppm		
f. Cylinder construction		

Part B.—To be filled out by audit supervisor.

1. Process sampled——

2. Audit location——

3. Name of individual audit——

4. Audit date——

5. Audit results:

	Low conc. cylinder	High conc. cylinder
a. Cylinder number		
b. Cylinder pressure before audit, psi		
c. Cylinder pressure after audit, psi		
d. Measured concentration, ppm Injection #1* Injection #2* Average		
e. Actual audit concentration, ppm (Part A, 6e)		
f. Audit accuracy:[1]		
Low Conc. Cylinder		
High Conc. Cylinder		
Percent[1] accuracy = $\frac{\text{Measured Conc.} - \text{Actual Conc.}}{\text{Actual Conc.}} \times 100$		
g. Problems detected (if any)		

[1] Results of two consecutive injections that meet the sample analysis criteria of the test method.

[47 FR 39178, Sept. 7, 1982]

11.0 REFERENCES

1. Method 18 - Measurement of Gaseous Organic Compound Emissions by Gas Chromatography. Federal Register, Volume 48, No. 202, October 18, 1983, page 48344.

2. Amendments to Method 18. Federal Register, Volume 49, No. 105, May 30, 1984, page 22608.

3. Miscellaneous Clarifications and Addition of Concentration Equations to Method 18. Federal Register, Volume 52, No. 33, February 19, 1987, page 5105.

4. Stability of Parts-Per-Million Organic Cylinder Gases and Results of Source Test Analysis Audits, Status Report #8. U. S. Environmental Protection Agency Publication No. EPA-600/2-86-117, January 1987. Also available from NTIS as Publication No. PB 87-141461.

5. Traceability Protocol for Establishing True Concentration of Gases Used for Calibration and Audits of Continuous Source Emission Monitors (Protocol No. 1). Section 3.0.4, Quality Assurance Handbook, Volume III, Stationary Source Specific Methods, U. S. Environmental Protection Agency Publication No. EPA-600/4-77-027b, June 15, 1978.

6. Methanol, Method 2000. NIOSH Manual of Analytical Methods, Volume 2, Third Edition, U. S. Department of Health and Human Services, February 1984.

7. Alcohols I, Method 1400. NIOSH Manual of Analytical Methods, Volume 1, Third Edition, U. S. Department of Health and Human Services, February 1984.

8. Alcohols II, Method 1401. NIOSH Manual of Analytical Methods, Volume 1, Third Edition, U. S. Department of Health and Human Services, February 1984.

9. Hydrocarbons, BP 36 - 126° C, Method 1500. NIOSH Manual of Analytical Methods, Volume 2, Third Edition, U. S. Department of Health and Human Services, February 1984.

10. Development of Methods for Sampling 1,3-Butadiene. Interim Report prepared under U. S. Environmental Protection Agency Contract Number 68-02-3993, March 1987.

11. Hexachlorocyclopentadiene, Method 2518. NIOSH Manual of Analytical Methods, Volume 2, Third Edition, U. S. Department of Health and Human Services, February 1984.

12. Method 110 - Determination of Benzene from Stationary Sources, Proposed Rule. Federal Register, Volume 45, No. 77, April 18, 1980, page 26677.

13. Hydrocarbons, Aromatic, Method 1501. NIOSH Manual of Analytical Methods, Volume 2, Third Edition, U. S. Department of Health and Human Services, February 1984.

14. Naphthylamines, Method 264. NIOSH Manual of Analytical Methods, Volume 4, Second Edition, U. S. Department of Health and Human Services, August 1978.

15. Ketones I, Method 1300. NIOSH Manual of Analytical Methods, Volume 2, Third Edition, U. S. Department of Health and Human Services, February 1984.

16. 2-Butanone, Method 2500. NIOSH Manual of Analytical Methods, Volume 1, Third Edition, U. S. Department of Health and Human Services, February 1984.

17. Ethylene Oxide, Method 1607. NIOSH Manual of Analytical Methods, Volume 1, Third Edition, U. S. Department of Health and Human Services, February 1984.

18. Propylene Oxide, Method 1612. NIOSH Manual of Analytical Methods, Volume 2, Third Edition, U. S. Department of Health and Human Services, February 1984.

19. Hydrocarbons, Halogenated, Method 1003. NIOSH Manual of Analytical Methods, Volume 2, Third Edition, U. S. Department of Health and Human Services, February 1984.

20. Ethylene Dibromide, Method 1008. NIOSH Manual of Analytical Methods, Volume 1, Third Edition, U. S. Department of Health and Human Services, February 1984.

21. Method 23 - Determination of Halogenated Organics from Stationary Sources (proposed method). Federal Register, Volume 45, No. 114, June 11, 1980, page 39766.

22. 1,2-Dichloropropane, Method 1013. NIOSH Manual of Analytical Methods, Volume 1, Third Edition, U. S. Department of Health and Human Services, February 1984.

23. Development of Methods for Sampling Chloroform and Carbon Tetrachloride. Interim Report prepared for U. S. Environmental Protection Agency under EPA Contract Number 68-02-3993, November 1986.

24. Dichlorodifluoromethane, Method 111. NIOSH Manual of Analytical Methods, Volume 2, Second Edition, U. S. Department of Health and Human Services, April 1977.

25. Methyl Bromide, Method 2520. NIOSH Manual of Analytical Methods, Volume 2, Third Edition, U. S. Department of Health and Human Services, February 1984.

26. Methyl Chloride, Method 99. NIOSH Manual of Analytical Methods, Volume 4, Second Edition, U. S. Department of Health and Human Services, August 1978.

27. Butler, F. E., E. A. Coppedge, J. C. Suggs, J. E. Knoll, M. R. Midgett, A. L. Sykes, M. W. Hartman, and J. L. Steger. Development of a Method for Determination of Methylene Chloride Emissions at Stationary Sources. Paper for presentation at 80th Annual Meeting of Air Pollution Control Association, New York, NY, June 1987.

28. Vinylidene Chloride, Method 266. NIOSH Manual of Analytical Methods, Volume 4, Second Edition, U. S. Department of Health and Human Services, August 1978.

29. Ethyl Chloride, Method 2519. NIOSH Manual of Analytical Methods, Volume 1, Third Edition, U. S. Department of Health and Human Services, February 1984.

30. Method 106 - Determination of Vinyl Chloride from Stationary Sources. Federal Register, Volume 47, No. 173, September 7, 1982, page 39168.

31. Knoll, J. E., M. A. Smith, and M. R. Midgett. Evaluation of Emission Test Methods for Halogenated Hydrocarbons, Volume II, U. S. Environmental Protection Agency Publication No. EPA-600/4- 80-003, January 1980.

32. Methylene Chloride, Method 1005. NIOSH Manual of Analytical Methods, Volume 2, Third Edition, U. S. Department of Health and Human Services, February 1984.

33. Tetrachloroethylene, Method 335. NIOSH Manual of Analytical Methods, Volume 3, Second Edition, U. S. Department of Health and Human Services, April 1977.

34. Trichloroethylene, Method 336. NIOSH Manual of Analytical Methods, Volume 3, Second Edition, U. S. Department of Health and Human Services, April 1977.

35. 1,1,2-Trichlorotrifluoroethane, Method 129. NIOSH Manual of Analytical Methods, Volume 2, Second Edition, U. S. Department of Health and Human Services, April 1977.

36. Vinyl Chloride, Method 1007. NIOSH Manual of Analytical Methods, Volume 2, Third Edition, U. S. Department of Health and Human Services, February 1984.

37. Mann, J. B., J. J. Freal, H. F. Enos, and J. X. Danauskas. Development and Application of Methodology for Determining 1,2 Dibromo-3-Chloropropane (DBCP) in Ambient Air. Journal of Environmental Science and Health, B15(5), 519-528 (1980).

38. VOC Sampling and Analysis Workshop, Volume III. U. S. Environmental Protection Agency Publication No. EPA-340/1-84-001C, September 1984.

39. Knoll, J. E., M. A. Smith, and M. R. Midgett. Evaluation of Emission Test Methods for Halogenated Hydrocarbons, Volume I. U. S. Environmental Protection Agency Publication No. EPA-600/4-79-025, March 1979.

40. Binetti, R. et al. Headspace Gas Chromatographic Detection of Ethylene Oxide in Air. Chromatographia, Vol. 21, December 1986.

41. Butadiene, Method 591. NIOSH Manual of Analytical Methods, Volume 2, Second Edition, U. S. Department of Health and Human Services, April 1977.

42. Knoll, J. E. Estimation of the Limit of Detection in Chromatography. Journal of Chromatographic Science, Vol. 23, September 1985.

43. Procedure 1 - Determination of Adequate Chromatographic Peak Resolution. Code of Federal Regulations, Title 40, Part 61, Appendix C, July 1, 1987.

44. Method 625 - Base/Neutrals and Acids. Code of Federal Regulations, Title 40, Part 136, Appendix A, July 1, 1987.

45. C_1 through C_5 Hydrocarbons in the Atmosphere by Gas Chromatography. ASTM D 2820-72, Part 23. American Society for Testing and Materials, Philadelphia, PA, 23:950-958, 1973.

46. Corazon, V. V. Methodology for Collecting and Analyzing Organic Air Pollutants. U. S. Environmental Protection Agency Publication No. EPA-600/2-79-042, February 1979.

47. Dravnieks, A., B. K. Krotoszynski, J. Whitfield, A. O'Donnell, and T. Burgwald. Environmental Science and Technology, 5(12):1200-1222, 1971.

48. Eggertsen, F. T., and F. M. Nelson. Gas Chromatographic Analysis of Engine Exhaust and Atmosphere. Analytical Chemistry, 30(6): 1040-1043, 1958.

49. Feairheller, W. R., P. J. Marn, D. H. Harris, and D. L. Harris. Technical Manual for Process Sampling Strategies for Organic Materials, U. S. Environmental Protection Agency, Publication No. EPA 600/2-76-122, April 1976.

50. FR, 39 FR 9319-9323, 1974.

51. FR, 39 FR 32857-32860, 1974.

52. FR, 41 FR 23069-23072 and 23076-23090, 1976.

53. FR, 41 FR 46569-46571, 1976.

54. FR, 42 FR 41771-41776, 1977.

55. Fishbein, L. Chromatography of Environmental Hazards, Volume II. Elsevier Scientific Publishing Company, New York, New York, 1973.

56. Hamersma, J. W., S. L. Reynolds, and R. F. Maddalone. EPA/IERL Procedures Manual: Level 1 Environmental Assessment, U. S. Environmental Protection Agency Publication No. EPA 600/276/160a, June 1976.

57. Harris, J. C., M. J. Hayes, P. L. Levins, and D. B. Lindsay. EPA/IERL Procedures for Level 2 Sampling and Analysis of Organic Materials. U. S. Environmental Protection Agency Publication No. EPA 600/7-79-033, February 1979.

58. Harris, W. E., H. W. Habgood. Programmed Temperature Gas Chromatography. John Wiley & Sons, Inc. New York, 1966.

59. Methods of Air Sampling and Analysis. Intersociety Committee, American Health Association, Washington, D. C., 1972.

60. Jones, P. W., R. D. Grammer, P. E. Strup, and T. B. Stanford. Environmental Science and Technology, 10:806-810, 1976.

61. McNair Han Bunelli, E. J. Basic Gas Chromatography. Consolidated Printers, Berkeley, 1969.

62. Nelson, G. O. Controlled Test Atmospheres, Principles and Techniques. Ann Arbor, Ann Arbor Science Publishers, 1971.

63. Schuetzle, D., T. J. Prater, and S. R. Ruddell. Sampling and Analysis of Emissions from Stationary Sources; I. Odor and Total Hydrocarbons. Journal of the Air Pollution Control Association, 1975.

64. Snyder, A. D., F. N. Hodgson, M. A. Kemmer, and J. R. McKendree. Utility of Solid Sorbents for Sampling Organic Emissions from Stationary Sources. U. S. Environmental Protection Agency Publication No. EPA 600/2-76-201, July 1976.

65. Tentative Method for Continuous Analysis of Total Hydrocarbons in the Atmosphere. Intersociety Committee, American Public Health Association, Washington, D.C., 1972.

66. Zwerg, G. CRC Handbook of Chromatography, Volumes I and II. CRC Press, Cleveland, 1972.

12.0 DATA FORMS

Blank data forms are provided on the following pages for the convenience of the Handbook user. Each blank form has the customary descriptive title centered at the top of the page. However, the section-page documentation in the top right-hand corner of each page has been replaced with a number in the lower right-hand corner that will enable the user to identify and refer to a similar filled-in form in a text section. For example, form M18-2.5 indicates that the form is Figure 2.5 in Section 3.18.2 of the Method 18 section. Future revisions of these forms, if any, can be documented by 2.5a, 2.5b, etc. Nineteen of the blank forms listed below are included in this section. Six have been left blank in the text as shown following the form number.

Form	Title
2.1A & B	Flowmeter Calibration Data Form (English and metric units)
2.2A & B	Critical Orifice Calibration Data Form (English and metric units)
2.5	Dynamic Dilution Data Form
2.6	Static Dilution Data Form
2.7	Thermometer Calibration Form
3.1 (Text)	Preliminary Survey Data Sheet
3.2 (Text)	Preliminary Survey Preparations
3.4 (Text)	Pretest Sampling Checks
3.5 (Text)	Pretest Preparations
4.1	Field Sampling Data Form for Container Sampling
4.2	Field Sampling Data Form for Direct Interface Sampling
4.3	Field Sampling Data Form for Adsorption Tube Sampling
4.8 (Text)	On-site Measurements Checklist
5.1	Data Form for Analysis of Method 18 Samples
5.4	Calibration Standard Preparation Data Form for Diluted Gas Cylinders
5.6	Calibration Data Form for Preparation of Standards in Tedlar Bags by Gas and Liquid Injection

5.8	Data Form for Development of Response and Relative Retention Factors
5.9	Data Form for Preparation of Liquid Standards and Desorption Efficiency Samples for Adsorption Tube Analysis
5.10 (Text)	Postsampling Operations Checklist
6.1	Calculation Form for GC Analysis by Gas Injection
6.2	Calculation Form for GC Analysis by Liquid Injection
8.1	Field Audit Report Form
8.2	Method 18 Checklist to be Used by Auditors

FLOWMETER CALIBRATION DATA FORM (English units)

Date _____ Calibrated by _____ Meter system no. _____ Primary meter no. _____
Barometric pressure, P_m = _____ in. Hg Ambient temperature _____ °F
Type of primary meter: wet test _____, dry gas _____, or bubble meter _____
Type of flowmeter calibrated: rotameter _____, dry gas meter _____, or mass flowmeter _____

Primary meter readings					Flowmeter readings							
Initial reading (V_{pi}),[a] ft^3	Final reading (V_{pf}),[a] ft^3	Initial temp, °F (t_{pi}) °F	Final temp, °F (t_{pf}) °F	Press drop (D_p)[c] in. H_2O	Initial reading (V_{si}),[b] ft^3 or ft^3/min	Final reading (V_{sf})[b] ft^3 or ft^3/min	Initial temp (t_{si}) °F	Final temp (t_{sf}) °F	Press drop (D_s),[c] in. H_2O	Time min (θ)[d] min	Calibration factors (Y_i),[e]	(Y)

[a] Volume passing through the meter using the initial and final readings; requires a minimum of at least five revolutions of the meter.
[b] Volume passing through the meter using the initial and final readings or the indicated flow rate using the initial and final flow rate setting.
[c] Pressure drop through the meter used to calculate the meter pressure.
[d] The time it takes to complete the calibration run.
[e] With Y defined as the average ratio of volumes for the primary meter compared to the flowmeter calibrated, $Y_i = Y \pm 0.03Y$ for the calibration and $Y_i = Y \pm 0.05Y$ for the posttest checks; thus:

For calibration of the dry gas meter:

$$Y_i = \frac{(V_{pf} - V_{pi})[(t_{si} + t_{sf})/2 + 460°F][P_m + (D_p/13.6)]}{(V_{sf} - V_{si})\ [(t_{pi} + t_{pf})/2 + 460°F][P_m + (D_s/13.6)]} \text{(Eq.2-1)}, Y = \frac{Y_1 + Y_2 + Y_3}{3} = \text{———(Eq.2-2)}$$

For calibration of the rotameter and mass flowmeter:

$$Y_i = \frac{(V_{pf} - V_{pi})[(t_{si} + t_{sf})/2 + 460°F][P_m + (D_p/13.6)]}{[(V_{sf} + V_{si})/2]\theta[(t_{pi} + t_{pf})/2 + 460°F][P_m + (D_s/13.6)]} \text{(Eq. 2-3)}, Y = \frac{Y_1 + Y_2 + Y_3}{3} = \text{———(Eq.2-4)}$$

FLOWMETER CALIBRATION DATA FORM (metric units)

Date _____ Calibrated by _____ Meter system no. _____ Primary meter no. _____
Barometric pressure, P_m = _____ mm Hg Ambient temperature _____ °C
Type of primary meter: wet test _____, dry gas _____, or bubble meter _____
Type of flowmeter calibrated: rotameter _____, dry gas meter _____, or mass flowmeter _____

Primary meter readings					Flowmeter readings							
Initial reading (V_{pi}),[a] m^3	Final reading (V_{pf}),[a] m^3	Initial temp, °F (t_{pi}) °C	Final temp, °F (t_{pf}) °C	Pres drop (D_p)[c] mm H_2O	Initial reading (V_{si}),[b] m^3 or m^3/min	Final reading (V_{sf})[b] m^3 or m^3/min	Initial temp (t_{si}) °C	Final temp (t_{sf}) °C	Press drop (D_s),[c] mm H_2O	Time min (θ)[d] min	Calibration factors (Y_i),[e]	Calibration factors (Y)

[a] Volume passing through the meter using the initial and final readings and requires a minimum of at least five revolutions of the meter.
[b] Volume passing through the meter using the initial and final readings or the indicated flow rate using the initial and final flow rate setting.
[c] Pressure drop through the meter used to calculate the meter pressure.
[d] The time it takes to complete the calibration run.
[e] With Y defined as the average ratio of volumes for the primary meter compared to the flowmeter calibrated, $Y_i = Y \pm 0.03Y$ for the calibration and $Y_i = Y \pm 0.05Y$ for the posttest checks; thus,

For calibration of the dry gas meter:

$$Y_i = \frac{(V_{pf} - V_{pi})[(t_{si} + t_{sf})/2 + 273°K][P_m + (D_p/13.6)]}{(V_{sf} - V_{si})\,[(t_{pi} + t_{pf})/2 + 273°K][P_m + (D_s/13.6)]} \quad \text{(Eq. 2-5)}, \quad Y = \frac{Y_1 + Y_2 + Y_3}{3} = ___ \quad \text{(Eq. 2-6)}$$

For calibration of the rotameter and mass flowmeter:

$$Y_i = \frac{(V_{pf} - V_{pi})[(t_{si} + t_{sf})/2 + 273°K][P_m + (D_p/13.6)]}{[(V_{sf} + V_{si})/2]\theta[(t_{pi} + t_{pf})/2 + 273°K][P_m + (D_s/13.6)]} \quad \text{(Eq. 2-7)}, \quad Y = \frac{Y_1 + Y_2 + Y_3}{3} = ___ \quad \text{(Eq. 2-8)}$$

CRITICAL ORIFICE CALIBRATION DATA FORM (English units)

Date _____ Calibrated by _____ Meter system no. _____ Primary meter no. _____
Barometric pressure, P_m = _____ in. Hg Ambient temperature _____ °F
Type of primary meter: wet test _____, dry gas _____, or bubble meter _____
Type of critical orifice: capillary glass _____, needle or tubing _____, or adjustable _____

Primary meter readings					Critical orifice readings						
Initial reading (V_{pi}),[a] ft^3	Final reading (V_{pf}),[a] ft^3	Initial temp, °F (t_{pi}) °F	Final temp, °F (t_{pf}) °F	Pres drop (D_p) in. H_2O	Initial setting[b] ft^3 or ft^3/min	Final setting[b] ft^3 or ft^3/min	Press drop[c] in. Hg	Time min (θ)[d] min	Calculated flow rate [$Q_{(std)}$][e] ft^3/min	Calibration factor[e] (K'_i)	(K')

[a] Volume passing through the meter using the initial and final readings and requires a minimum of at least five revolutions of the meter.
[b] Volume passing through the orifice using the initial and final readings or the indicated flow rate using the initial and final flow rate setting (for variable setting orifice only).
[c] Pressure drop through the meter used to calculate the meter pressure.
[d] The time it takes to complete the calibration run.
[e] With K' defined as the average orifice calibration factor based on the volumes of the primary test meter, $K'_i = K' \pm 0.03K'$ for the calibration and $K'_i = K' \pm 0.05K'$ for the posttest checks: thus,

Flow rate of the primary meter at standard conditions:

$$Vp_{(std)} = \frac{17.71(V_{pf} - V_{pi})(P_m + D_p/13.6)}{[(t_{pi} + t_{pf})/2 + 460°F]} \text{ (Eq. 2-9)}, \quad Q_{(std)} = \frac{Vp_{(std)}}{\theta} = _____ \text{ (Eq. 2-10)}$$

For determination of the K' for the critical orifice:

$$K'_i = \frac{Vp_{(std)}\,[(t_{pi} + t_{pf})/2 + 460°F]^{1/2}}{P_{bar}\;\theta} \text{ (Eq. 2-11)}, \;\&\; K' = \frac{K'_1 + K'_2 + K'_3}{3} = _____ \text{ (Eq. 2-12)}$$

CRITICAL ORIFICE CALIBRATION DATA FORM (metric units)

Date _____ Calibrated by _____ Meter system no. _____ Primary meter no. _____
Barometric pressure, P_m = _____ mm Hg Ambient temperature _____ °C
Type of primary meter: wet test _____, dry gas _____, or bubble meter _____
Type of critical orifice: capillary glass _____, needle or tubing _____, or adjustable _____

Primary meter readings					Critical orifice readings						
Initial reading (V_{pi}),[a] L	Final reading (V_{pf}),[a] L	Initial temp, °F (t_{pi}) °C	Final temp, °F (t_{pf}) °C	Pres drop (D_p) mm H_2O	Initial setting[b] L or L/min	Final setting[b] L or L/min	Press drop[c] mm Hg	Time min (θ),[d] min	Calculated flow rate [$Q_{(std)}$][e] L/min	Calibration factor[e] (K'_i)	(K')

[a] Volume passing through the meter using the initial and final readings and requires a minimum of at least five revolutions of the meter.
[b] Volume passing through the orifice using the initial and final readings or the indicated flow rate using the initial and final flow rate setting (for variable setting orifice only).
[c] Pressure drop through the meter used to calculate the meter pressure.
[d] The time it takes to complete the calibration run.
[e] With K' defined as the average orifice calibration factor based on the volumes of the primary test meter, $K'_i = K' \pm 0.03K'$ for the calibration and $K'_i = K' \pm 0.05K'$ for the posttest checks; thus,

Flow rate of the primary meter at standard conditions:

$$Vp_{(std)} = \frac{0.3858(V_{pf} - V_{pi})(P_m + D_p/13.6)}{[(t_{pi} + t_{pf})/2 + 273°C]} \text{ (Eq. 2-13)}, \quad Q_{(std)} = \frac{Vp_{(std)}}{\theta} = _____ \text{ (Eq. 2-14)}$$

For determination of the K' for the critical orifice:

$$K'_i = \frac{Vp_{(std)}\,[(t_{pi} + t_{pf})/2 + 273°C]^{1/2}}{P_{bar}\;\theta} \text{ (Eq. 2-15)}, \;\&\; K' = \frac{K'_1 + K'_2 + K'_3}{3} = _____ \text{ (Eq. 2-16)}$$

DYNAMIC CALIBRATION DATA FORM

Date _____
Source flowmeter number _____
Stage 1 flowmeter number _____
Stage 2 flowmeter number _____
Barometric press _____ mm (in.) Hg
Organic compound _____
Certified concentration _____ ppmv($\bar{X}$)

Calibrated by _____
Date source meter calibrated _____
Date stage 1 meter calibrated _____
Date stage 2 meter calibrated _____
Heated box temperature _____ °C (°F)
Leak check for total system _____
Date of calibration curve _____

STAGE 1	RUN 1	RUN 2	RUN 3
Emission gas flowmeter reading, ml/min (q_{c1})			
Diluent gas flowmeter reading, ml/min (q_{d1})			
Dilution ratio			
Injection time, 24h			
Distance to peak, cm			
Chart speed, cm/min			
Retention time, min			
Attenuation factor			
Peak area or units			
Peak area X attenuation factor			
Measured concentration,[a] ppmv			
Calculated concentration,[b] ppmv (C_s)			
Percent difference,[c] %			

STAGE 2 (if applicable)	RUN 1	RUN2	RUN3
Emission gas flowmeter reading, ml/min (q_{c2})			
Diluent gas flowmeter reading, ml/min (q_{d2})			
Dilution ratio			
Injection time, 24h			
Distance to peak, cm			
Chart speed, cm/min			
Retention time, min			
Attenuation factor			
Peak area or units			
Peak area X attenuation factor			
Measured concentration,[a] ppmv			
Calculated concentration,[d] ppmv			
Percent difference,[c] %			

[a] See Figure 5.1 for calculation.

[b] $$C_s = \frac{10^6 \times (\bar{X} \times q_c)}{q_c + q_d}$$ = Calculated concentration for single stage

[c] $$\text{Percent Difference} = \frac{\text{Calculated Concentration} - \text{Measured Concentration}}{\text{Measured Concentration}} \times 100\%$$

[d] $$C_s = 10^6 \times \bar{X} \left[\frac{q_{c1}}{(q_{c1} + q_{d1})}\right] \times \left[\frac{q_{c2}}{(q_{c2} + q_{d2})}\right]$$ = Calculated conc. for two stage

STATIC DILUTION DATA FORM

Date _____	Calibrated by _____
Source flowmeter number _____	Date source meter calibrated _____
Dry gas meter number _____	Date dry gas meter calibrated _____
Ambient temperature _____ °C (°F)	Dry gas meter calib factor (Y) _____
Barometric press _____ mm (in.) Hg	Leak check for total system _____
Organic compound _____	Vacuum during leak check _____
Certified concen, (X) _____ ppmv	Date of calibration curve _____

	RUN 1	RUN 2	RUN 3
Initial dry gas meter reading, L (ft^3)			
Final dry gas meter reading, L (ft^3)			
Volume of diluent gas metered, L (ft^3)			
Gas metered X calibration factor (Y), $\{V_2\}$			
Flowmeter sampling rate, ml/min (cfm)			
Sampling time, min			
Sampling rate X sample time, L (ft^3), $\{V_1\}$			
Dilution ratio			
Injection time, 24h			
Distance to peak, cm			
Chart speed, cm/min			
Retention time, min			
Attenuation factor			
Peak area or units			
Peak area X attenuation factor			
Measured concentration,[a] ppmv			
Calculated concentration,[b] ppmv, $\{C_s\}$			
Percent difference,[c] %			

[a] See Figure 5.1 for calculations.

[b] Calculated concentration $(C_s) = \dfrac{\bar{X}(V_1)}{(V_1 + V_2)} = _____$ ppmv

[c] Percent difference, $\%d = \dfrac{\text{Measured concent} - \text{Calculated concent}}{\text{Measured concentration}} \times 100 = ____$ %

The percent difference must be less than 10 % absolute.

THERMOMETER CALIBRATION FORM

Date	Reference thermometer type	Calibrated thermometer			Measured values						Calibrator's initials
					Ambient temperature			Boiling water			
		type	use	no.	refer[a]	calibr[b]	differ[c]	refer[a]	calibr[b]	differ[c]	

[a] Temperature reading of the reference thermometer in °C or °F.
[b] Temperature reading of the thermometer being calibrated in °C or °F.
[c] Difference between the reference thermometer and the calibrated thermometer. This difference must be less than 3°C (5.4°F) for than initial calibration and 6°C (10.4°F) for the calibration check.

FIELD SAMPLING DATA FORM FOR CONTAINER SAMPLING

Plant _____
City _____
Operator _____
Date _____
Run number _____
Stack dia, mm (in.) _____
_____
Sample box number _____
Pitot tube (C_p) _____
Static press ____ mm (in.) H_2O

Flowmeter calib.(Y) _____
Container type: bag _____
syringe _____
canister _____
Container volume, _____ liters
Container number _____
Average (P) _____ mm (in.) H_2O
Initial flowmeter setting _____
Average stack temp _____ °C (°F)
Barometric press _____ mm (in.) Hg

Dilution system: (dynamic)
emission flowsetting _____
diluent flowsetting _____
Dilution system: (static)
emission flowsetting _____
Final leak check ____ m^3/min (cfm)
Vacuum during leak check _____
_____ mm (in.) H_2O
Sampling point location _____
_____

Sampling time, min	Clock time, 24 h	Velocity head mm (in.) H_2O, (P)	Flowmeter setting L/min (ft^3/min)	Temperature readings stack °C (°F)	probe °C (°F)	sample line °C (°F)	flowmeter box °C (°F)	container °C (°F)
Total		Avg	Avg	Avg	Avg	Avg	Avg	Avg

FIELD SAMPLING DATA FORM FOR DIRECT INTERFACE SAMPLING

Plant _____
City _____
Operator _____
Date _____
Run number _____
Stack dia, mm (in.) _____
_____
Meter box number _____
Stack temp _____ °C (°F)
Static press ____ mm (in.) H_2O

Barometric press _____ mm (in.) Hg
Initial probe setting _____ °C (°F)
Sampling rate _____ L/min (cfm)
Sampling point location _____
_____
Dilution system:
source flow rate _____ L/min (cfm)
diluent flow rate ____ L/min (cfm)
diluent flow rate ____ L/min (cfm)
Dilution ratio _____

Sample loop volume _____ ml
Sample loop temp _____ C (°F)
Column temperature:
initial _____/_____ °C/min
program rate _____/_____ °C/min
final _____/_____ °C/min
Carrier gas flow _____ ml/min
Dilution system check _____
Final leak check _____
Vacuum @ check ____ mm (in.) H_2O

Time of injection 24 h	Injection number	Flowmeter(s) settings			Temperature readings			
		source ml/min	diluent ml/min	diluent ml/min	stack °C (°F)	probe °C (°F)	sample line °C (°F)	injection port °C (°F)

FIELD SAMPLING DATA FORM FOR ADSORPTION TUBE SAMPLING

Plant _____
City _____
Operator _____
Date _____
Run number _____
Stack dia, mm (in.) _____
_____
Meter box number _____
Pitot tube (C_p) _____
Static press ____ mm (in.) H_2O

Flowmeter calib.(Y) _____
Adsorption tube type:
charcoal tube _____
silica gel _____
other _____
Adsorption tube number _____
Average (P) _____ mm (in.) H_2O
Initial flowmeter setting _____
Average stack temp _____ °C (°F)
Barometric press _____ mm (in.) Hg

Dilution system: (dynamic)
emission flowsetting _____
diluent flowsetting _____
Dilution system: (static)
emission flowsetting _____
Final leak check ____ m^3/min (cfm)
Vacuum during leak check _____
_____ mm (in.) H_2O
Sampling point location _____
_____

Sampling time, min	Clock time, 24 h	Velocity head mm (in.) H_2O, (P)	Flowmeter setting L/min (ft^3/min)	Temperature readings stack °C (°F)	probe, line °C (°F)	adsorp. tube °C (°F)	meter °C (°F)	Vacuum mm (in.) Hg
Total		Avg	Avg	Avg	Avg	Avg	Avg	Avg

ANALYSIS OF METHOD 18 FIELD SAMPLES

Date: _____ Analyst: _____ Plant: _____
Location: _____ Sample Type: _____
Type of Calibration Standard: _____ Target Compound: _____
Number of Standards: ___ Date Prepared: _____ Prepared By: _____

GC Used: _____ Column Used: _____
Carrier Gas Used: _____ Carrier Gas Flow Rate: _____
Column Temperatures, Initial: _____ Program Rate: _____ Final: _____
Sample Loop Volume: ___ Loop Temperature: _____ Inject. Port Temp.: _____
Detector Temp.: ___ Auxiliary Gases: _____

Calibration Data	Standard 1	Standard 2	Standard 3
First analysis/second analysis			
Standard concentration (C_{act})	_____	_____	_____
Flow rate through loop (ml/min)	___/___	___/___	___/___
Liquid injection volume (tubes)	___/___	___/___	___/___
Injection time (24-hr clock)	___/___	___/___	___/___
Chart speed (cm/min)	___/___	___/___	___/___
Detector attenuation	___/___	___/___	___/___
Peak retention time (min)	___/___	___/___	___/___
Peak retention time range (min)	_____	_____	_____
Peak area	___/___	___/___	___/___
Peak area x attenuation factor	___/___	___/___	___/___
Average peak area value (Y)	_____	_____	_____
Percent deviation from average	_____	_____	_____
Calculated concentration (C_{std})	_____	_____	_____
% deviation from actual ($\%D_{act}$)	_____	_____	_____

Linear regression equation; slope (m): _____ y-intercept (b): _____

Sample Analysis Data	Sample 1	Sample 2	Sample 3
First analysis/second analysis			
Sample identification	_____	_____	_____
Interface dilution factor	_____	_____	_____
Flow rate through loop (ml/min)	___/___	___/___	___/___
Liquid injection volume (tubes)	___/___	___/___	___/___
Injection time (24-hr clock)	___/___	___/___	___/___
Chart speed (cm/min)	___/___	___/___	___/___
Detector attenuation	___/___	___/___	___/___
Peak retention time (min)	___/___	___/___	___/___
Peak retention time range (min)	_____	_____	_____
Peak area	___/___	___/___	___/___
Peak area x atten. factor (A_1/A_2)	___/___	___/___	___/___
Average peak area value (Y)	_____	_____	_____
% deviation from average ($\%D_{avg}$)	_____	_____	_____
Calculated concentration (C_s)	_____	_____	_____

$$C_{std} \text{ or } C_s = \frac{(Y - b)}{m} \qquad \%D_{avg} = \left| \frac{A_1 - Y}{Y} \right| \times 100\% \qquad \%D_{act} = \frac{C_{std} - C_{act}}{Y} \times 100\%$$

PREPARATION OF STANDARDS BY DILUTION OF GAS CYLINDER STANDARDS

Date: _____ Preparer: _____ Purpose: _____

Cylinder Component: _____ Source: _____
Component Concentration (X): _____ ppm_v Certification Date: _____

Stage 1	Mixture 1	Mixture 2	Mixture 3
Standard gas flowmeter reading	_____	_____	_____
Diluent gas flowmeter reading	_____	_____	_____
Laboratory temperature (°K)	_____	_____	_____
Barometric pressure (P_b) (mm Hg)	_____	_____	_____
Flow rate of cylinder gas (q_{c1}) at standard conditions (ml/min)	_____	_____	_____
Flow rate of diluent gas (q_{d1}) at standard conditions (ml/min)	_____	_____	_____
Calculated concentration (C_s)	_____	_____	_____

$$C_s = \frac{X \times q_{c1}}{q_{c1} + q_{d1}}$$

Stage 2 (if used)	Mixture 1	Mixture 2	Mixture 3
Standard gas flowmeter reading from stage 1	_____	_____	_____
Diluent gas flowmeter reading into stage 2	_____	_____	_____
Average differential pressure (P_d) between stage 1 and 2 (mm H_2O)	_____	_____	_____
Flow rate of diluted gas ($q_{c2\ actual}$) at standard conditions to stage 2 (ml/min)	_____	_____	_____
Flow rate of diluted gas ($q_{c2\ corr}$) at corrected standard conditions to stage 2 (ml/min)	_____	_____	_____
Flow rate of diluent gas (q_{d2}) at standard conditions to stage 2 (ml/min)	_____	_____	_____
Calculated concentration (C_s)	_____	_____	_____

$$q_{c2\ corr} = q_{c2\ actual} \times \frac{P_d + P_b}{P_b}$$

$$C_s = X \times \frac{q_{c1}}{(q_{c1} + q_{d1})} \times \frac{q_{c2\ corr}}{(q_{c2\ corr} + q_{d2})}$$

PREPARATION OF STANDARDS IN TEDLAR BAGS BY GAS AND LIQUID INJECTION

Date: _____ Preparer: _____ Purpose: _____

Organic Compound: _____ Gas: _____ or Liquid: _____
Compound Source: _____ Compound Purity (P): ____% Compound Mole Weight (M): _____

Gas Injection	Mixture 1	Mixture 2	Mixture 3
Bag number or identification			
Dry gas meter calibration factor (Y)			
Final gas meter reading, liters			
Initial gas meter reading, liters			
Volume metered (V_m), liters			
Ambient temperature, °C			
Average gas meter temperature, °C			
Absolute gas meter temp. (T_m), °K			
Barometric pressure (P_b), mm Hg			
Average gas meter pressure, mm Hg			
Absolute gas meter press. (P_m), mm Hg			
Gas volume injected (G_v), ml			
Syringe temperature (T_s), °K			
Absolute syringe pressure (P_s), mm Hg			
Calculated concentration (C_s)			

$$C_s = = \frac{G_v \times 10^3 \times \frac{P_s \times T_m}{T_s \times P_m}}{V_m \times Y}$$

$$C_{s\ corr} = \frac{C_{s\ calc}}{P} \times 100\%$$

Liquid Injection	Mixture 1	Mixture 2	Mixture 3
Bag number or identification			
Dry gas meter calibration factor (Y)			
Final gas meter reading· liters			
Initial gas meter reading, liters			
Volume metered (V_m), liters			
Average gas meter temperature, °C			
Absolute gas meter temp. (T_m), °K			
Barometric pressure (P_b), mm Hg			
Average gas meter pressure, mm Hg			
Absolute gas meter press. (P_m), mm Hg			
Liquid organic density (p), ug/ml			
Liquid volume injected (L_v), ul			
Calculated concentration (C_s)			

$$C_s = 6.24 \times 10^4 \times \frac{L_v \times p \times T_m}{M \times V_m \times Y \times P_m}$$

$$C_{s\ corr} = \frac{C_{s\ calc}}{P} \times 100\%$$

DEVELOPMENT OF RELATIVE RESPONSE FACTORS AND RELATIVE RETENTION FACTORS

Date: _____ Preparer: _____ Purpose: _____
Target Compound: _____ Type of Standard: _____
Surrogate Compound: _____ Type of Standard: _____

Target Compound Calibration Data	Standard 1	Standard 2	Standard 3
First analysis/verify analysis			
Standard concentration	_____	_____	_____
Flow rate through loop (ml/min)	___/___	___/___	___/___
Liquid injection volume (tubes)	___/___	___/___	___/___
Injection time (24-hr clock)	___/___	___/___	___/___
Chart speed (cm/min)	___/___	___/___	___/___
Detector attenuation	___/___	___/___	___/___
Peak retention time (t_{Rxi}/t_{Rxf})	___/___	___/___	___/___
Peak retention time range	_____	_____	_____
Peak area	___/___	___/___	___/___
Peak area x atten. factor (Y_i/Y_x)	___/___	___/___	___/___
Verification analysis conc.(C_x)	_____	_____	_____
Percent deviation from actual	_____	_____	_____
Caculated retention time (r_{Txf})	_____	_____	_____
Percent deviation from actual	_____	_____	_____

Linear regression equation; slope (m_x): _____ y-intercept (b): _____

Surrogate Calibration Data	Standard 1	Standard 2	Standard 3
First analysis/second analysis			
Standard concentration	_____	_____	_____
Flow rate through loop (ml/min)	___/___	___/___	___/___
Liquid injection volume (tubes)	___/___	___/___	___/___
Injection time (24-hr clock)	___/___	___/___	___/___
Chart speed (cm/mni)	___/___	___/___	___/___
Detector attenuation	___/___	___/___	___/___
Peak retention time (t_{Rsi}/t_{Rsf})	___/___	___/___	___/___
Peak retention time range	_____	_____	_____
Peak area	___/___	___/___	___/___
Peak area x attenuation factor	___/___	___/___	___/___

Linear regression equation; slope (m_s): _____ (m_f): _____ y-intercept (b): _____

Nonretained peak retention time (t_{Mi}/t_{Mf}): ___/___

Relative Response Factor (F_{Rx}): _____ Relative Retention Factor ($r_{x/s}$): _____

$$F_{Rx} = \frac{m_s}{m_x} \qquad r_{x/s} = \frac{(t_{Rxi} - t_{Mi})}{(t_{Rsi} - t_{Mi})} \qquad C_x = \frac{Y_x}{m_{std}} \times F_{Rx}$$

$$r_{Txf} = ((r_{Tsf} - t_{Mf}) \times r_{x/s}) + t_{Mf}$$

DATA FORM FOR PREPARATION OF LIQUID STANDARDS AND DESORPTION EFFICIENCY SAMPLES

Date: _____ Preparer: _____ Purpose: _____

Organic Compound: _____ Gas: _____ or Liquid: _____
Compound Source: _____ Compound Purity (P): ____% Compound Mole Weight (M): ____
Adsorbent Material: _____ Batch No: _____ Desorption Solvent: _____

Standards in Solvent	Mixture 1	Mixture 2	Mixture 3
Desorption solvent volume (V_s), ml	_____	_____	_____
Compound spike amount (V_o), ul	_____	_____	_____
Organic compound density (p), ug/ul	_____	_____	_____
Standard concentration (C_s), ug/ml	_____	_____	_____

Standards on Adsorbent	Mixture 1	Mixture 2	Mixture 3	Blank
Adsorbent amount, g	_____	_____	_____	_____
Compound spike amount (V_o), ul	_____	_____	_____	_____
Organic compound density (p), ug/ul	_____	_____	_____	_____
Desorption solvent volume (V_s), ml	_____	_____	_____	_____
Desorption time, min	_____	_____	_____	_____
Standard concentration (C_s), ug/ml	_____	_____	_____	_____

GC Operating Conditions	
Injection port temperature, °C	_____
Carrier gas flow rate, ml/min	_____
Column temperature:	
Initial, °C	_____
Program rate, °C/min	_____
Final, °C	_____

Chromatographic Results	Mixture 1	Mixture 2	Mixture 3	Blank
Injection time, 24-hr clock	_____	_____	_____	_____
Distance to peak, cm	_____	_____	_____	_____
Chart speed, cm/min	_____	_____	_____	_____
Retention time, min	_____	_____	_____	_____
Attenuation factor	_____	_____	_____	_____
Standards in desorption solvent:				
Peak area (A_c), area counts	_____	_____	_____	_____
Standards and blank from adsorbent material:				
Peak area (A_s and A_b), area counts	_____	_____	_____	_____

Desorption Efficiency Calculation	Mixture 1	Mixture 2	Mixture 3
Desorption Efficiency (DE), %	_____	_____	_____

$$C_s = \frac{V_o \times p \times P}{V_s \times 100\%}$$

$$DE = \frac{A_s - A_b}{A_c} \times 100\%$$

CALCULATION FORM FOR GC ANALYSIS BY GAS INJECTION

SAMPLE CONCENTRATION

C_s = _ _ _ _ ppm, P_r = _ _ _ . _ mm Hg, T_i = _ _ _ . _ °K,

P_i = _ _ _ . _ mm Hg, T_r = _ _ _ . _ °K, B_{ws} = 0 . _ _ ,

K^* = 0 . _ _ , F_r^* = _ _ _

$$C_c = \frac{C_s \; P_r \; T_i \; F_r \; K}{P_i \; T_r \; (1 - B_{ws} K)} = ___ \text{ ppm} \qquad \text{Equation 6-1}$$

*If applicable.

CALCULATION FORM FOR GC ANALYSIS BY LIQUID INJECTION

SAMPLE VOLUME, DRY BASIS AT STANDARD CONDITIONS

V_m = ___ . __ L, P_{bar} = ___ . __ mm Hg,

T_{amb} = ___ . __ °K, B_{ws}* = 0 . __ __ , K* = 0 . __ __

$$V_{std,dry} = 0.3858 \frac{P_{bar} V_m}{T_a m_b (1 - B_{ws} K)^*} = ___ \text{ L} \qquad \text{Equation 6-2}$$

*If applicable.

DESORPTION EFFICIENCY

Q_r = ___ , Q_a = ___ , B = ___

$$DE = (Q_r - B)/Q_a = 0 . __ __ \qquad \text{Equation 6-3}$$

SAMPLE CONCENTRATION

W_p = ____ ug, W_b = ____ ug, B_p = ____ ug,

B_b = ____ ug, V_{std} = ___ . __ L, DE = 0 . __ __ ,

K* = 0 . __ __

$$C = \frac{(W_p + W_b - B_p - B_b)K}{V_{std} \times DE} = ____ \text{ mg/dscm or ug/dsL} \qquad \text{Equation 6-4}$$

CONVERSION TO PPM

C = ____ mg/dscm or ug/dsL, MW = ___ . __ ug/ug-mole,

$$C_{ppm} = 24.055 \text{ C (MW)} = ____ \text{ ppm} \qquad \text{Equation 6-5}$$

FIELD AUDIT REPORT

Part A. - To be filled out by organization supplying audit cylinders.

1. Organization supplying audit sample(s) and shipping address

   _____

2. Audit supervisor, organization, and phone number

   _____

3. Shipping instructions: Name, Address, Attention

   _____

4. Guaranteed arrival date for cylinders - _____
5. Planned shipping date for cylinders - _____
6. Details on audit cylinders from last analysis

	Low conc.	High conc.
a. Date of last analysis.....	.....	.....
b. Cylinder number.....	.....	.....
c. Cylinder pressure, psi.....	.....	.....
d. Audit gas(es)/balance gas..	.....	.....
e. Audit gas(es), ppm.....	.....	.....
f. Cylinder construction.....	.....	.....

Part B. - To be filled out by audit supervisor.

1. Process sampled _____
2. Audit location _____
3. Name of individual audit _____
4. Audit date _____
5. Audit Results:

	Low conc. cylinder	High conc. cylinder
a. Cylinder number.....	.....	.....
b. Cylinder pressure before audit, psi.....	.....	.....
c. Cylinder pressure after audit, psi.....	.....	.....
d. Measured concentration, ppm		
Injection #1* Injection #2* Average.....	.....	.....
e. Actual audit concentration, ppm		
f. Audit accuracy:[1]		
Low Conc. Cylinder.....	.....	.....
High Conc. Cylinder.....	.....	.....
Percent[1] accuracy =		
$\frac{\text{Measured Conc. - Actual Conc.}}{\text{Actual Conc.}} \times 100$		
g. Problems detected (if any).....	.....	.....

[1]Results of two consecutive injections that meet the sample analysis criteria of the test method.

METHOD 18 AUDIT CHECKLIST

Yes	No	Comments	Operation
			PRESAMPLING PREPARATION
___	___	_____	1. Knowledge of process operations
___	___	_____	2. Results of pretest audit (± 10% or other value)
___	___	_____	3. Calibration of pertinent equipment, in particular, dry gas meters and other flowmeters
___	___	_____	4. Selection and checkout of equipment for proper sampling and analytical techniques BAGS - reactivity, condensation, & retention ADSORPTION TUBES - adsorption & desorption efficiency DILUTION SYSTEM - dilution ratio GC/COLUMN - adequate resolution GC/DETECTOR - acceptable accuracy & precision
			ON-SITE MEASUREMENTS
___	___	_____	5. Results of on-site audit (± 10% or other value)
___	___	_____	6. Sampling system properly assembled
___	___	_____	7. Based on pitot tube check, is proportional sampling required (more than 10% flow change)
___	___	_____	8. Dilution system check acceptable (if applicable)
___	___	_____	9. Sampling system leak check acceptable
___	___	_____	10. Proportional sampling properly conducted
___	___	_____	11. Constant rate sampling properly conducted
___	___	_____	12. Heater systems maintained at proper temperatures
___	___	_____	13. Proper number of samples & sampling time
___	___	_____	14. GC properly calibrated
___	___	_____	15. Duplicate injections had acceptable precision <5%
___	___	_____	16. Recording of pertinent process conditions during sample collection, samples properly identified, and calculations properly conducted
			POSTSAMPLING
___	___	_____	17. Results of off-site audit (± 10% or other value)
___	___	_____	18. GC properly calibrated
___	___	_____	19. Duplicate injections had acceptable precision <5%
___	___	_____	20. Adsorption efficiency acceptable,>90% on primary
___	___	_____	21. Desorption efficiency acceptable,>50% recovery
___	___	_____	22. Adequate peak resolution
___	___	_____	23. Bags passed reaction check, less than 10% change
___	___	_____	24. Bags passed retention check,less than 5% retained
___	___	_____	25. Flowmeters recalibration acceptable
___	___	_____	26. Temperature sensor recalibration acceptable
COMMENTS			

☆U.S. GOVERNMENT PRINTING OFFICE: 1989-648-163/87062