United States
Environmental Protection
Agency

Office of Air Quality
Planning and Standards
Research Triangle Park NC 27711

EMB Report 81-IBR-14
January 1982

Air

EPA

Industrial Boilers

Emission Test Report
Caterpillar Tractor Company
East Peoria, Illinois

INDUSTRIAL BOILERS

Emission Test Report

CATERPILLAR TRACTOR CO.
BOILER NO. 19
East Peoria, Illinois

August 3-4, 1981

Technical Directives 12 and 13

Prepared for

Environmental Protection Agency
Office of Air Quality Planning and Standards
Emission Measurement Branch
Research Triangle Park
North Carolina 27711

by

C. L. Cornett, Jr. and Windle H. McDonald

Contract No. 68-02-3547, Work Assignment No. 2
(ESED 76/13)
(EMB-81-IBR-14)

July 1982

MONSANTO RESEARCH CORPORATION
DAYTON LABORATORY
Dayton, Ohio 45407

CONTENTS

	Page
Figures	vi
Tables	v
1. Introduction	1
2. Summary of Results	4
Description of Monitoring	4
Test Results	4
3. Process Description	13
Boiler System	13
Scrubber System	13
Monitoring Data	17
Comments on Test	22
4. Location of Sampling Points	23
Stack	23
Coal Feed System	23
5. Sampling and Analytical Procedures	27
Summary	27
Stack Sampling	27
Stack Sample Analysis	29
Coal Sampling	30
Coal Analysis	30
Sample Handling	30
Data Reduction	31
Quality Assurance	31

Appendices

A. Field Sampling Data Sheets and Computer Coding Forms	
A-1 Field Log and Sample Identification Log	A-1
A-2 Calibration Data	A-9
A-3 Computer Input Sheets	A-15
A-4 Field Sampling Data Sheets	A-18
B. Printouts of Sampling Results	B-1
C. Analytical Methods for Sulfuric Acid and Sulfate Determinations	C-1

CONTENTS (continued)

		Page
D.	Analytical Data	
	D-1 Results of Stack Sample Analysis.	D-1
	D-2 Total Particulate Mass Data	D-4
	D-3 Sulfuric Acid Mass Data	D-10
	D-4 Sulfate Mass Data	D-12
	D-5 QC Report for East Peoria Plant	D-14
	D-6 Coal Analysis Data.	D-27
E.	Project Participants	E-1

FIGURES

Number		Page
1	Location of East Peoria Caterpillar Tractor Co. Plant	2
2	Schematic diagram of Boiler No. 19 and associated systems at the Caterpillar Tractor Co. in East Peoria, Illinois.	3
3	Dual alkali sulfur dioxide removal process at Caterpillar Tractor Co. Boiler No. 19 in East Peoria, Illinois	15
4	Stack sampling site at Caterpillar Tractor Co. Boiler No. 19 in East Peoria, Illinois. .	24
5	Traverse point locations at Caterpillar Tractor Co. Boiler No. 19 stack in East Peoria, Illinois.	25
6	Coal sampling site at Caterpillar Tractor Co. Boiler No. 19 in East Peoria, Illinois. . . .	26
7	Dual-probe sampling train	28
8	Coal sampling device.	30

TABLES

Number		Page
1	Source Sampling and Analyses at Caterpillar Tractor Co. Boiler No. 19 in East Peoria, Illinois.	5
2	Emission Data for Caterpillar Tractor Co. Boiler No. 19 in East Peoria, Illinois (Metric Units).	6
3	Emission Data for Caterpillar Tractor Co. Boiler No. 19 in East Peoria, Illinois (English Units)	7
4	Summary of Differences Between Method 5 and Method 5B Results at Caterpillar Tractor Co. Boiler No. 19 in East Peoria, Illinois. . . .	9
5	Summary of Duration of Sampling, Stack Temperature, Stack Flow Rate, Sample Volume, Sample Water Content and Static Pressure at Caterpillar Tractor Co. Boiler No. 19 in East Peoria, Illinois.	10
6	Summary of Integrated Gas Analysis Results at Caterpillar Tractor Co. Boiler No. 19 in East Peoria, Illinois	11
7	Summary of Coal Analysis at Caterpillar Tractor Co. Boiler No. 19 in East Peoria, Illinois. .	11
8	Design, Operating, and Performance Characteristics of the Double Alkali Scrubbing System at Caterpillar Tractor Co. Boiler No. 19 in East Peoria, Illinois	14
9	Boiler and Scrubber Operating Parameters (8/3/81 Run 1).	18
10	Boiler and Scrubber Operating Parameters (8/4/81 Run 2).	19
11	Boiler and Scrubber Operating Parameters (8/4/81 Run 3).	20

SECTION 1

INTRODUCTION

Emissions from Boiler No. 19 at the Caterpillar Tractor Co. Plant at 600 West Washington, East Peoria, Illinois, were tested August 3-4, 1981 by Monsanto Research Corporation (MRC). Figure 1 is a map showing the location of the plant. This work was performed for the Emission Measurement Branch of the U.S. Environmental Protection Agency (EPA) under Contract No. 68-02-3547, Work Assignment No. 2.

The boiler tested was a 70 MW (236 x 10^6 Btu/hr) capacity coal-fired spreader stoker with a traveling grate and an economizer. It was equipped with a mechanical collector, a dual alkali venturi scrubber, and a demister. Figure 2 is a schematic diagram of the installation showing the locations sampled.

The purpose of the sampling program was to provide background information on well-controlled industrial boilers for the development of new source performance standards. Within this framework the objectives of sampling at Caterpillar Tractor Co. in East Peoria, Illinois were to determine the effect of raising the temperature of the filter and probe on an EPA Method 5 train from 120°C (248°F) to 160°C (320°F) and of baking the filter at 160°C (320°F) on the amounts of particulate, sulfate, and sulfuric acid emissions measured downstream of the scrubber and demister. Method 5 testing with the filter and probe at 160°C ± 14°C (320°F ± 25°F) and baked at a temperature of 160°C ± 11°C (320°F ± 20°F) will be referred to as Method 5B testing.

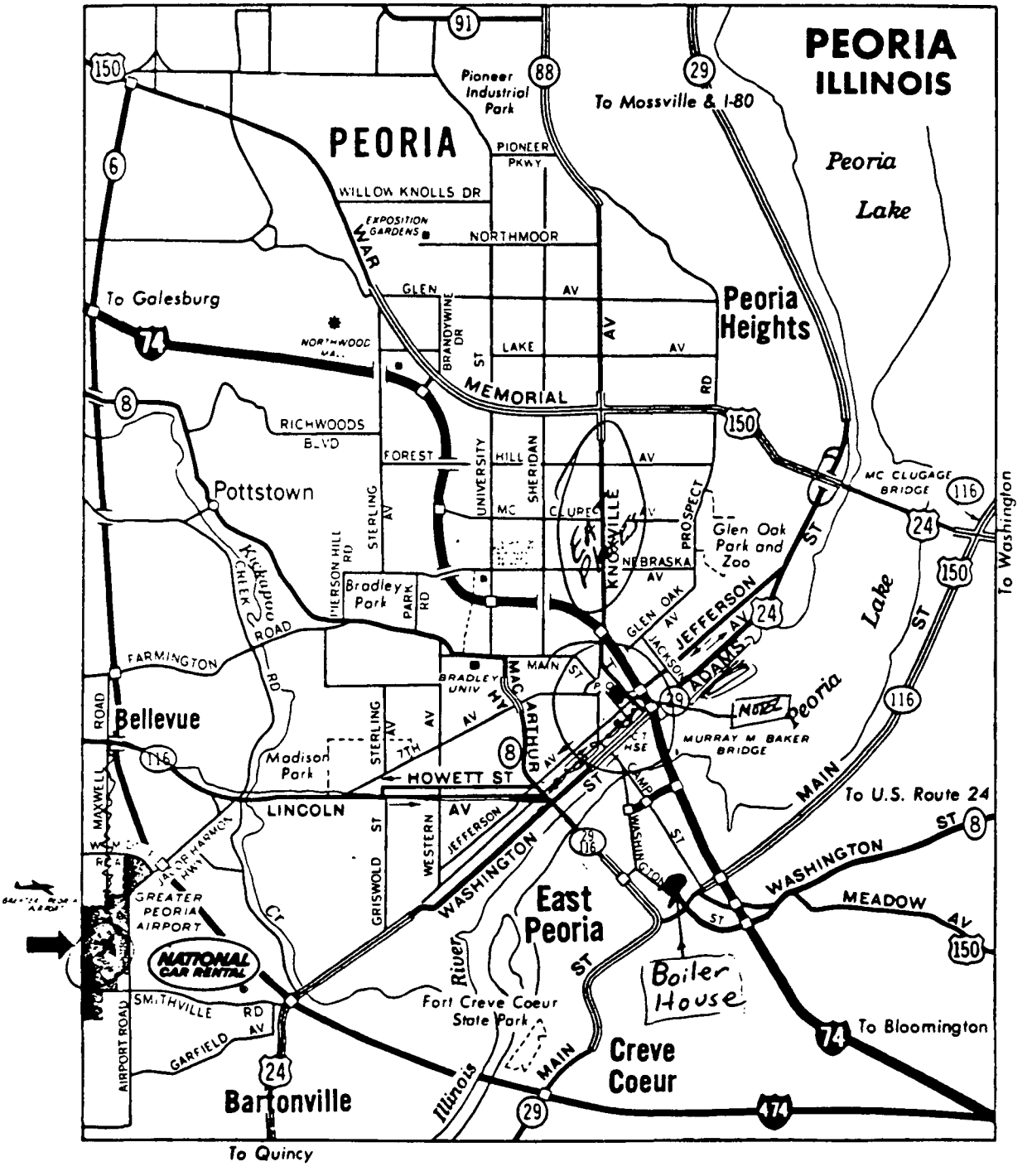

Figure 1. Location of East Peoria Caterpillar Tractor Co. Plant.

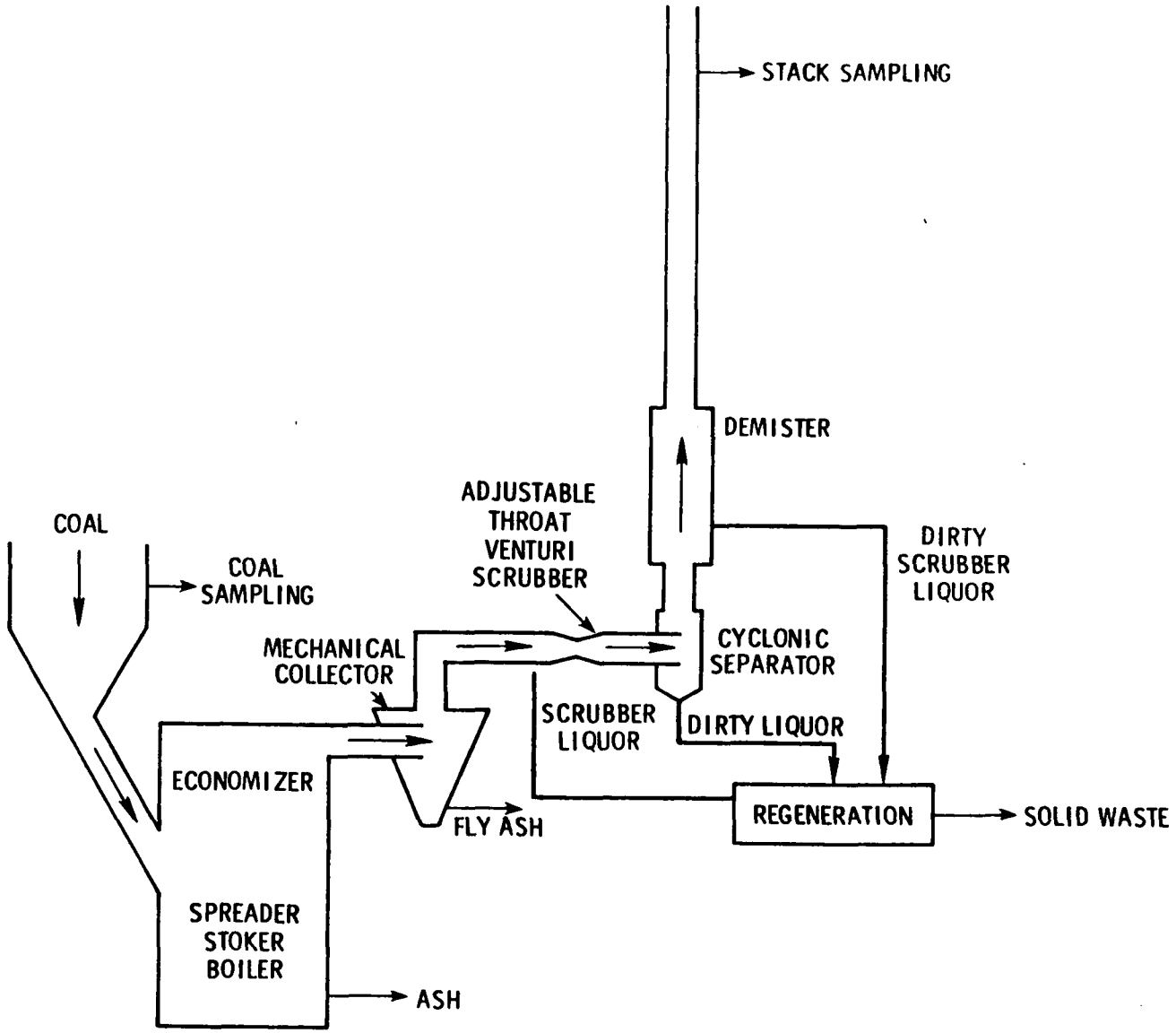

Figure 2. Schematic diagram of Boiler No. 19 and associated systems at the Caterpillar Tractor Co. in East Peoria, Illinois.

SECTION 2

SUMMARY OF RESULTS

DESCRIPTION OF MONITORING

Table 1 summarizes the monitoring that was performed at this plant. It consisted of three simultaneous runs of Methods 5 and 5B downstream of all pollution control equipment. A special dual-probe stack test system was used for sampling with Methods 5 and 5B simultaneously through the same sample ports with the nozzles spaced 4.4 cm (1.75 in.) apart. Sample volumes of at least 1.06 dry standard m^3 (37.4 dry standard ft^3) were taken. The boiler was running under steady state conditions (no soot blowing, no ash unloading, etc.) at 70% to 75% of its full capacity during the emission testing.

The coal burned was considered to be representative of normal feed.

The filters and dried acetone washes of the Method 5 and 5B runs were weighed, baked, and weighed again; this process was repeated until the sample weight did not change more than 10 mg between successive weighings. They were then analyzed for sulfuric acid and sulfates.

Methods 1 through 4 were used during all Method 5 sampling runs, as in typical compliance monitoring.

Grab samples of coal were taken during every run by sampling before, during, and after the run. The grab samples were combined to make one aggregate coal sample for a stack sampling run. The sulfur, ash, moisture, and Btu content of each sample were determined by ASTM D 3176 and ASTM D 2015-66(72).

TEST RESULTS

The particulate, sulfuric acid, and sulfate emissions measured by Methods 5 and 5B are summarized in Tables 2 and 3 (particulate emissions represent all emissions measured by weighing the Method 5 and 5B samples and include sulfuric acid and sulfates). Table 2 shows the percent reduction in particulate mass that was caused by baking the samples. In addition, Table 3 shows the percents of the Method 5 concentrations represented by the Method 5B concentrations measured simultaneously at the same

TABLE 1. SOURCE SAMPLING AND ANALYSES AT CATERPILLAR TRACTOR CO. BOILER NO. 19 IN EAST PEORIA, ILLINOIS

SAMPLING AND ANALYSIS REQUIREMENTS

MRC Job No. 101.1221

Contract No.: 68-02-3547 | Assignment Number: 2 ESED 76/13 | Technical Directive: 12 and 13

Company Name: Caterpillar Tractor Co. | Company Location: East Peoria, Illinois

Industry: Industrial Boiler | Process: Coal Fired Spreader Stoker | Control Equipment: Multiclone and Dual Alkali Scrubber

Total no. of samples	Sample type	Sampling method	Sample collected by	Minimum sampling time	Minimum volume gas sampled ft^3	Initial Analysis Type	Initial Analysis Method	Initial Analysis By	Final Analysis Type	Final Analysis Method	Final Analysis By
3	Particulate and bag at exhaust	1-4 & 5B special dual probe train		100 min.	37	Velocity Temp. H_2O O_2, CO, CO_2	1-4		Particulate	Method 5B (Bake sample 160°C 3 hrs)	
									SO_3, H_2SO_4	10/10/80 procedure	
3	Particulate and bag at exhaust	1-4 & 5 special dual probe train		100 min.	37	Velocity Temp. H_2O O_2, CO, CO_2	1-4		Particulate	Method 5 except bake sample at 160°C 3 hrs	
									SO_3, H_2SO_4	10/10/80 procedure	
4[a]	Coal	GRAB		100 min.		Inspection	Visual		Sulfur Ash Btu	ASTM D 3176 ASTM D 2015-66(72)	

Prepared by: Larry Cornett

Date: 8/5/81

Approved by: _____

Date: _____

[a]One aggregate coal sample was taken for every stack sampling run by grab sampling before, during and after the run except for one stack sampling run for which two aggregate coal samples were taken.

TABLE 2. EMISSION DATA FOR CATERPILLAR TRACTOR CO. BOILER NO. 19 IN EAST PEORIA, ILLINOIS (METRIC UNITS)

Run number	Date	Sampling method	Pollutant	Average emissions Actual g/dscm	kg/hr	ng/J[a]	Corrected[b] to 12% CO_2, g/dscm	Percent isokinetic	Percent difference in sample weight caused by baking sample[c]
1	8-3-81		Particulate						
		5	-Before baking	0.260	17.0	134 ± 11	0.362 ± 0.000	104.6	
		5B	-Before baking	0.088	5.8	45 ± 4	0.122 ± 0.000	104.9	
		5	-After baking	0.179	11.7	92 ± 8	0.250 ± 0.000	104.6	31
		5B	-After baking	0.079	5.2	41 ± 3	0.111 ± 0.000	104.9	9
		5	Sulfuric acid	0.006	0.4	3 ± 0	0.009 ± 0.000	104.6	
		5B	Sulfuric acid	0.006	0.4	3 ± 0	0.008 ± 0.000	104.9	
		5	Sulfate	0.026	1.7	13 ± 1	0.036 ± 0.000	104.6	
		5B	Sulfate	0.023	1.5	12 ± 1	0.032 ± 0.000	104.9	
2	8-4-81		Particulate						
		5	-Before baking	0.230	15.4	114 ± 10	0.30 ± 0.02	98.7	
		5B	-Before baking	0.058	4.1	29 ± 2	0.075 ± 0.005	96.5	
		5	-After baking	0.160	10.7	79 ± 7	0.21 ± 0.01	98.7	30
		5B	-After baking	0.054	3.8	27 ± 2	0.069 ± 0.004	96.5	8
		5	Sulfuric acid	0.010	0.7	5 ± 0	0.013 ± 0.001	98.7	
		5B	Sulfuric acid	0.009	0.6	4 ± 0	0.011 ± 0.001	96.5	
		5	Sulfate	0.022	1.4	11 ± 1	0.028 ± 0.002	98.7	
		5B	Sulfate	0.013	0.9	6 ± 1	0.017 ± 0.001	96.5	
3	8-4-81	Particulate							
		5	-Before baking	0.85	12.9	85 ± 5	0.24 ± 0.02	99.0	
		5B	-Before baking	0.135	9.5	62 ± 4	0.17 ± 0.01	103.0	
		5	-After baking	0.101	7.0	46 ± 3	0.13 ± 0.01	99.0	46
		5B	-After baking	0.129	9.1	59 ± 4	0.16 ± 0.02	103.0	5
		5	Sulfuric acid	0.009	0.6	4 ± 0	0.012 ± 0.001	99.0	
		5B	Sulfuric acid	0.005	0.4	2 ± 0	0.007 ± 0.001	103.0	
		5	Sulfate	0.024	1.7	11 ± 1	0.031 ± 0.002	99.0	
		5B	Sulfate	0.023	1.6	11 ± 1	0.029 ± 0.002	103.0	

[a]The "±" values reflect the effect on ng/Joule emissions from the variation in the % O_2 between duplicate O_2 samples (one taken behind the Method 5 train and one behind the Method 5B train). Uncertainties in the particulate, sulfuric acid, and sulfate masses are not included.

[b]This is the concentration normalized to 12% CO_2. $C = C \times \frac{12}{\%CO_2}$; where C is the measured concentration in the stack, and $\%CO_2$ is the percent CO_2 measured in the stack.

[c]$\frac{\text{weight before baking - weight after baking}}{\text{weight before baking}} \times 100$

TABLE 3. EMISSION DATA FOR CATERPILLAR TRACTOR CO. BOILER NO. 19 IN EAST PEORIA, ILLINOIS (ENGLISH UNITS)

Run number	Date	Sampling method	Pollutant	Average emissions: Actual gr/dscf	Average emissions: lb/hr	Average emissions: lb/mm Btu[a]	Corrected to 12% CO_2,[b] gr/dscf	Percent isokinetic	Percent of Method 5 gr/dscf represented by Method 5B gr/dscf at outlet
1	8-3-81		Particulate						
		5	-Before baking	0.113	37.6	0.31 ± 0.03	0.158 ± 0.00	104.6	
		5B	-Before baking	0.038	12.8	0.10 ± 0.01	0.053 ± 0.00	104.9	34
		5	-After baking	0.078	25.9	0.21 ± 0.02	0.109 ± 0.00	104.6	
		5B	-After baking	0.035	11.6	0.10 ± 0.01	0.048 ± 0.00	104.9	45
		5	Sulfuric acid	0.003	0.9	0.01 ± 0.00	0.004 ± 0.00	104.6	
		5B	Sulfuric acid	0.002	0.8	0.01 ± 0.00	0.003 ± 0.00	104.9	67
		5	Sulfate	0.011	3.8	0.03 ± 0.00	0.016 ± 0.00	104.6	
		5B	Sulfate	0.010	3.4	0.03 ± 0.00	0.014 ± 0.00	104.9	91
2	8-4-81		Particulate						
		5	-Before baking	0.100	34.0	0.26 ± 0.03	0.13 ± 0.01	98.7	
		5B	-Before baking	0.025	9.1	0.07 ± 0.01	0.033 ± 0.002	96.5	25
		5	-After baking	0.070	23.7	0.18 ± 0.02	0.090 ± 0.006	98.7	
		5B	-After baking	0.023	8.4	0.06 ± 0.01	0.030 ± 0.002	96.5	33
		5	Sulfuric acid	0.004	1.5	0.01 ± 0.00	0.006 ± 0.001	98.7	
		5B	Sulfuric acid	0.004	1.4	0.01 ± 0.00	0.005 ± 0.000	96.5	100
		5	Sulfate	0.009	3.2	0.02 ± 0.00	0.012 ± 0.001	98.7	
		5B	Sulfate	0.006	2.1	0.02 ± 0.00	0.007 ± 0.001	96.5	67
3	8-4-81		Particulate						
		5	-Before baking	0.081	28.4	0.20 ± 0.01	0.103 ± 0.008	99.0	
		5B	-Before baking	0.059	21.0	0.14 ± 0.01	0.075 ± 0.006	103.0	73
		5	-After baking	0.044	15.5	0.11 ± 0.01	0.056 ± 0.004	99.0	
		5B	-After baking	0.056	20.0	0.14 ± 0.01	0.072 ± 0.005	103.0	127
		5	Sulfuric acid	0.004	1.4	0.01 ± 0.00	0.005 ± 0.001	99.0	
		5B	Sulfuric acid	0.002	0.8	0.01 ± 0.00	0.003 ± 0.000	103.0	50
		5	Sulfate	0.011	3.7	0.03 ± 0.00	0.014 ± 0.001	99.0	
		5B	Sulfate	0.010	3.6	0.02 ± 0.00	0.013 ± 0.001	103.0	91

[a]The "±" values reflect the effect on the calculated lb/10^6 Btu emissions of the variation in the % O_2 between duplicate O_2 samples (one taken behind the Method 5 train and one behind the Method 5B train). Uncertainties in the particulate, sulfuric acid, and sulfate masses are not included.

[b]This is the concentraction normalized by 12% CO_2. $C = C \times \frac{12}{\%CO_2}$; where C is the measured concentration in the stack and $\%CO_2$ is the percent CO_2 measured in the stack.

location. Particulate concentrations measured by Method 5B were 32% to 127% of the Method 5 particulate concentrations after both samples were baked. For the unbaked samples, Method 5B concentrations were 25% to 73% of the Method 5 concentrations. Sulfuric acid concentrations measured on the baked Method 5B samples were 50% to 100% of the baked Method 5 sample. Sulfate concentrations measured on the Method 5B samples were 67% to 91% of the baked Method 5 sample sulfate concentrations. The weight of the Method 5 samples after baking was 54% to 70% of the weight before baking. The weight of the Method 5B samples after baking was 91% to 95% of the weight before baking.

Computer printouts of the particulate, sulfuric acid, and sulfate emission rates are provided in Appendix B.

The differences between Method 5 and 5B emissions are summarized in Table 4 (using the baked methods and 5B filters). This table also summarizes what percent of the differences between Method 5 and 5B particulate emissions (baked) can be accounted for by differences in the amounts of sulfuric acid (and sulfuric acid and sulfates combined) measured on the baked samples collected by Method 5 versus 5B. One percent to 31% of the amount of difference in particulate emissions measured by Method 5 versus 5B (with the samples baked) are accounted for by differences in the amounts of measured sulfuric acid emissions. Sulfuric acid and sulfates combined account for 9% to 31% of the difference in particulate emissions between measurements by Method 5 and Method 5B (with the filters baked).

Table 5 summarizes the duration of the Method 5 and 5B sampling, the sample volumes, the stack temperatures, the stack flow rates, the water content, and the static pressure of the flue gas. Differences in the stack temperature flow rate and water content associated with the Method 5 and 5B samples are an indicator of the precision of the results.

Table 6 summarizes the flue gas carbon dioxide, carbon monoxide, oxygen, and nitrogen concentrations in integrated Method 3 samples taken at the exhaust of the trains used to collect Method 5 and 5B samples. Differences between the Method 3 results downstream of the Method 5 and 5B samples are indicative of the precision of the sampling, sample handling, and analysis. The average values are also reported for each run. These average values were used to calculate the emissions in ng/joule and lb/10^6 Btu in Tables 2 and 3, along with the results at 12% CO_2.

Table 7 summarizes the coal analyses results. A duplicate sample was taken during Run 1 for QA/QC purposes. Comparison of the two samples indicates a low percent of relative difference.

TABLE 4. SUMMARY OF DIFFERENCES BETWEEN METHOD 5 AND METHOD 5B RESULTS AT CATERPILLAR TRACTOR CO. BOILER NO. 19 IN EAST PEORIA, ILLINOIS

Run number	Pollutant	Method 5[a] minus Method 5B emissions kg/hr	Method 5[a] minus Method 5B emissions lb/hr	Percent of difference in particulate emissions kg/hr (lb/hr) represented by difference in sulfuric acid emissions	Percent of difference in particulate emissions kg/hr (lb/hr) represented by difference in sulfuric acid and sulfates combined
1	Particulate[a]	6.5	14.3		
	Sulfuric acid	0	0.1	1%	
	Sulfates	0.2	0.4		
	Sulfuric acid and sulfates	0.2	0.5		3.1%
2	Particulate[a]	6.9	15.3		
	Sulfuric acid	0.1	0.1	1%	
	Sulfates	0.5	1.1		
	Sulfuric acid and sulfates	0.6	1.2		9%
3	Particulate[a]	-2.1	-4.5		
	Sulfuric acid	0.2	0.6	10%	
	Sulfates	0.1	0.1		
	Sulfuric acid and sulfates	0.3	0.7		14%

[a]Emissions measured using masses after baking samples.

TABLE 5. SUMMARY OF DURATION OF SAMPLING, STACK TEMPERATURE, STACK FLOW RATE, SAMPLE VOLUME, SAMPLE WATER CONTENT, AND STATIC PRESSURE AT CATERPILLAR TRACTOR CO. BOILER NO. 19 IN EAST PEORIA, ILLINOIS

Run number	Sampling method	Duration of sampling, min	Measured stack temperature		Stack flow rate		Sample volume		Sample water content, %	Stack static pressures	
			°C	°F	dscm/min	dscf/min	dscm	dscf		cm H_2O	in. H_2O
1	5	100	57	135	1100	38,700	1.06	37.42	1.78	-0.56	-0.22
	5B	100	57	135	1100	38,900	1.07	37.79	17.3	-0.56	-0.22
2	5	120	59	137	1120	39,500	2.08	73.58	18.9	-0.56	-0.22
	5B	120	59	137	1180	41,800	2.19	77.42	13.3	-0.56	-0.22
3	5	120	59	138	1160	40,900	2.17	76.56	18.9	-0.56	-0.22
	5B	120	59	138	1170	41,300	2.32	81.76	18.4	-0.56	-0.22

TABLE 6. SUMMARY OF INTEGRATED GAS ANALYSIS RESULTS AT CATERPILLAR TRACTOR CO. BOILER NO. 19 IN EAST PEORIA, ILLINOIS

Run number	Sampling method before Method 3 bag	CO_2, %	CO, %	O_2, %	N_2, %	Dry molecular weight, kg/kg mole (lb/lb mole)
1	5	8.6	0.00	10.9	80.5	27.7
	5B	8.6	0.00	9.4	82.0	27.7
	Average	8.6	0.00	10.2 ± 0.8	81.2 ± 0.8	27.7
2	5	9.9	0.01	8.9	81.1	27.7
	5B	8.7	0.00	10.6	80.6	28.2
	Average	9.3 ± 0.6	0.00	9.8 ± 0.9	80.8 ± 0.3	28.0 ± 0.3
3	5	10.0	0.00	8.2	81.7	27.7
	5B	8.7	0.00	9.6	81.6	27.6
	Average	9.4 ± 0.7	0.00	8.9 ± 0.7	81.6 ± 01	27.7 ± 0.1

TABLE 7. SUMMARY OF COAL ANALYSIS AT CATERPILLAR TRACTOR CO. BOILER NO. 19 IN EAST PEORIA, ILLINOIS

Run number	Total moisture, percent	Heating value, Joule/gram, dry	Heating value, Joule/gram, as received	Heating value, Btu/lb, dry	Heating value, Btu/lb, as received	Ash, percent, dry	Ash, percent, as received	Sulfur, percent, dry	Sulfur, percent, as received
1[a]	18	29,400	24,200	12,600	10,400	12.4	10.2	3.1	2.6
	17	28,700	23,900	12,300	10,300	12.9	10.7	3.3	2.7
(difference)	(1)	(700)	(300)	(300)	(100)	(0.5)	(0.5)	(0.2)	(0.1)
2	17	28,000	23,300	12,000	10,000	15.6	13.0	3.1	2.6
3	17	29,100	24,200	12,500	10,400	13.0	10.7	3.1	2.6

[a]Replicate samples were taken during this run.

Appendix E-5 contains a summary of available information on the precision and accuracy of the particulate, sulfate, and sulfuric acid analysis. Every sample was weighed several times. The observed particulate masses were stable to within 2.2% of the values used to calculate emission rates. Six quality control samples of sulfuric acid were prepared from 0.02 N sulfuric acid and analyzed along with the East Peoria stack samples. The measured amounts of sulfuric acid were between 94% and 135% of the reported "true" values. The results of the analysis of two EPA sulfate quality control filter strip samples showed the measured values to be between 99% and 117% of the "true" amounts of sulfate. A "blank" filter was also analyzed as a quality control sample; 0.6 mg of sulfate was measured on this filter. This is much less than the lowest observed amount of sulfate on a stack sample (24.9 mg). The possibility exists of differences in the physical and chemical composition of the stack samples (compared to those of the quality control samples) changing the accuracy of analysis of the stack samples from that reported for the quality control samples.

SECTION 3

PROCESS DESCRIPTION

BOILER SYSTEM

The boiler house at Caterpillar's East Peoria Plant contains four traveling-grate, spreader-stoker boilers (Boilers No. 19, 20, 21, and 22). The boilers supply 150 psi steam (about 350°F) into a common plant steam header for use in steam cleaning, space heating, and other operations. In the summer months when space heating requirements are minimal, only one boiler operating at 30 to 50 percent load is required. During the test period, Boilers 20, 21, and 22 were down for a summer maintenance outage and only Boiler 19 was operating. The boilers burn high sulfur (about 3 percent) bituminous coal from several local sources. Untreated flue gas contains about 2,000 ppm SO_2.

Boiler No. 19 was installed in 1957, with a maximum continuous rating of 200,000 pounds per hour of steam. It is equipped with an economizer and mechanical dust collector. The flue gas temperature at the economizer discharge is about 400°F. Caterpillar personnel in the boiler house indicated that the unit has been modified several times since installation, but that most of these modifications were to improve reliability and simplify maintenance on the traveling grate mechanism. During the tests, the boiler was operated at about 180,000 pounds per hour of steam.

SCRUBBER SYSTEM

Each boiler is equipped with a dual-throat venturi scrubber with an adjustable insert for particulate and SO_2 control. The scrubbers are part of an FMC Dual Alkali regenerable liquor scrubbing system. Gas flows through the throat of the venturi and is thoroughly mixed with scrubbing liquor. Sulfur dioxide is absorbed into the liquor while fly ash particles adhere to the liquor droplets. The gas then passes into a cyclonic-flow separator where the liquor droplets are disengaged and fall to the bottom of the separator. The gas passes through a wire-mesh mist eliminator at the top of the separator before entering the stack. Table 8 lists design and operating features of the scrubber system. Figure 3 shows a flow diagram of the scrubbers and liquor regeneration system. Sulfur dioxide is absorbed into a "concentrated" alkaline liquor containing sodium ions from soda ash (about 1 molar),

TABLE 8. DESIGN, OPERATING, AND PERFORMANCE CHARACTERISTICS OF THE DOUBLE ALKALI SCRUBBING SYSTEM AT CATERPILLAR TRACTOR CO. BOILER NO. 19 IN EAST PEORIA, ILLINOIS

Fuel	Approximately 10,000 Btu/lb, 3% sulfur coal
Scrubber	Single dual-throat venturi with an adjustable insert, followed by separator and mist eliminator.
Process mode	Concentrated liquor
Scrubber pressure drop	Adjustable. Normally operated near 15 in. H_2O. Designed for 17 in. H_2O.
Status	Operational
Inlet	
Flow rate	Load-dependent. 54,000 to 58,000 acfm (25.5 to 27.4 m^3/s) during tests. (Approximately 75% load)
SO_2	Approximately 2,000 ppm
O_2	Varies. Higher at lower loads. 6.6 to 8.5% during tests.
Particulate	Not available
SO_2 outlet	150 ppm to 200 ppm (design)
Scrubbing solution	
pH	5.8 to 7.5
Total sodium	Approximately 1 molar
Active sodium	Approximately 0.3 molar
Soda ash makeup	High[a]
Lime utilization	1.3 to 2.0 mole/mole S in cake
Filter cake solids	60 to 70%
Filter cake disposal	Offsite

[a]During summer 1981 operations, water balance difficulties had forced high soda ash makeup rates due to high blowdown. While this problem was partially under control during the tests, a reliable baseline makeup rate could not be established.

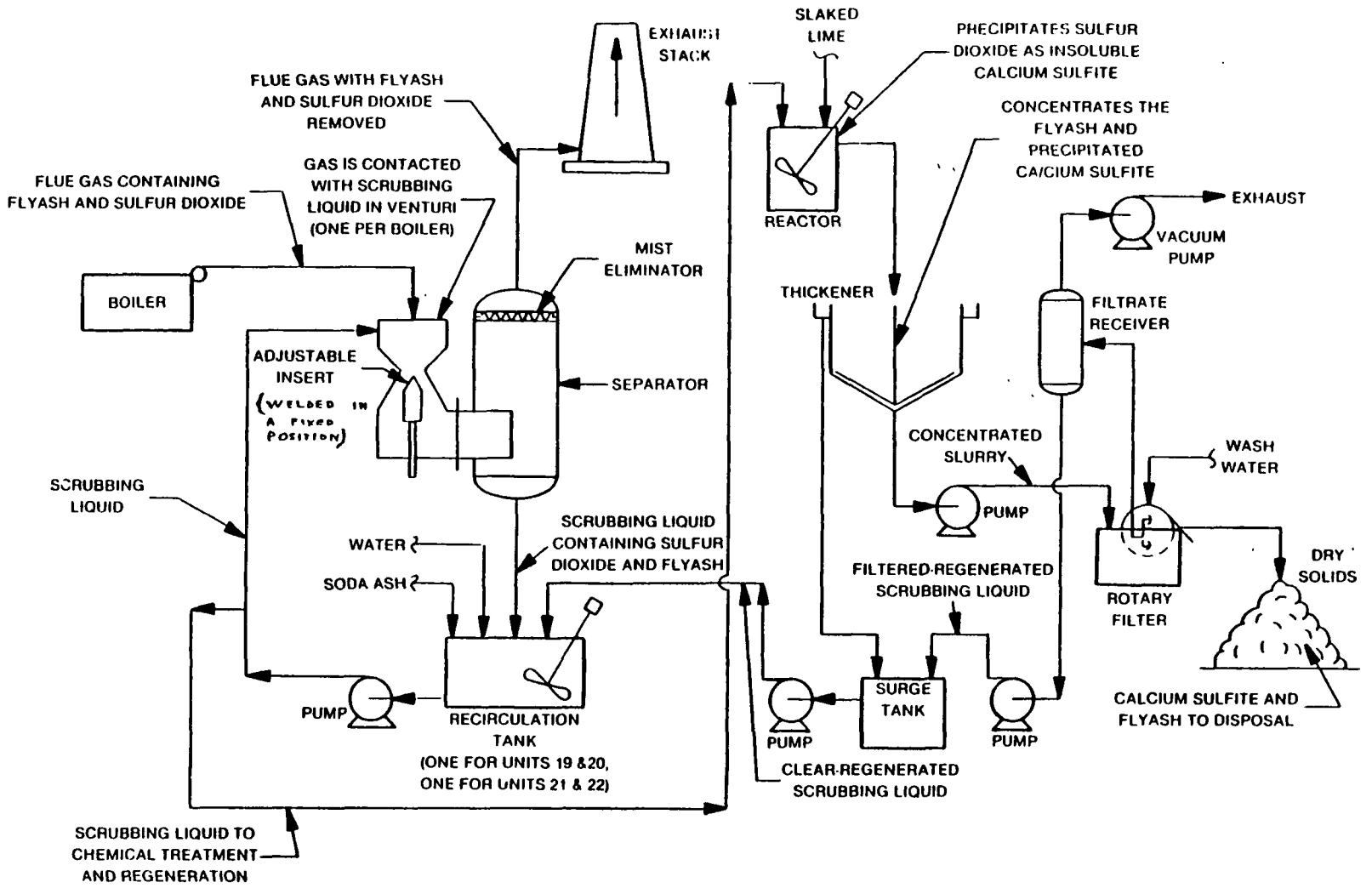

Figure 3. Dual alkali sulfur dioxide removal process at Caterpillar Tractor Co. Boiler No. 19 in East Peoria, Illinois.

sulfite and bisulfite ions from absorbed SO_2 (about 0.6 molar total), and sulfate ions from oxidation of sulfite (about 0.4 molar). SO_2 is absorbed and forms sulfite and bisulfite ions by several reactions:

$$H_2O + SO_2 \text{ (gas)} + SO_3^{=} \text{ (sulfite ion)} \longrightarrow 2HSO_3^{-} \text{ (bisulfite ions)}$$

$$SO_2 \text{ (g)} + H_2O \longrightarrow H_2SO_3 \text{ (sulfurous acid)}$$

$$H_2SO_3 + OH^{-} \longrightarrow HSO_3^{-} + H_2O$$

Sodium serves to balance the acidity of the sulfite ions, providing alkalinity and thus improving the solubility of SO_2. Sulfite and bisulfite ions maintain an equilibrium via the following reaction:

$$SO_3^{=} + H_2O \longrightarrow HSO_3^{-} + OH^{-}$$

Temperature, pH, and total concentration affect this equilibrium. At typical operating conditions, about half of the dissolved SO_2 will be in each form. This reaction provides a pH "buffering" effect which allows the liquor to absorb SO_2 in the scrubber loop without a severe drop in pH (loss of alkalinity). When oxygen in the flue gas dissolves in the liquor, a small portion of the bisulfite is oxidized to form nonregenerable sulfate ions:

$$1/2\ O_2 + HSO_3^{-} \longrightarrow SO_4^{=} + H^{+}$$

Sulfite-rich solution is bled continuously from the scrubbing loop to the regeneration system. The solution is reacted with slaked lime (calcium hydroxide) to precipitate calcium sulfite:

$$Ca^{++} + SO_3^{=} + 1/2\ H_2O \longrightarrow CaSO_3 \cdot 1/2\ H_2O$$

The solution is then sent to a thickener where fly ash and calcium sulfite solids settle out. A rotary drum vacuum filter dries the thickener underflow slurry to a cake containing 60 to 70 weight percent solids. The cake is disposed of off-site by an independent contractor and the filtrate is combined with thickener overflow in the surge tanks. Clear, regenerated liquor from the surge tanks is returned to the scrubbers.

MONITORING DATA

The boiler and scrubber processes were monitored during testing for the following reasons:

- To insure that the boiler was operating at a relatively steady state;
- To insure that the boiler was operating within normal tolerances;
- To insure that the scrubber was operating normally at or near the desired pressure drop (20 inches H_2O) and that no liquor feed abnormalities occurred;
- To record process data used in determining emission rates (pounds emitted/MM Btu);
- To record process data used as a qualitative guideline to document normal boiler operation.

Several process parameters were monitored during emissions testing. Table 9 through 11 are a compilation of these data. The process parameters recorded are described in the following list.

(1) Steam Production Rates - The steam production rate was recorded by a continuous monitor. Normal fluctuations in steam demand at the East Peoria plant caused changes in the steam production rate which were compensated for by adjusting steam blowoff. Approximately 50 to 60 percent of the total steam production was used in the plant, the remainder was vented. Fluctuating steam demand causes pressure variations in the steam lines that affect the accuracy of the steam production monitoring equipment slightly. The degree to which these fluctuations can affect the accuracy is unknown. The pressure in the steam supply header was between 144 and 152 psig during all tests.

(2) Flue Gas Oxygen - The oxygen content in the flue gas was sampled on a continuous basis at the outlet of the mechanical dust collector. The instrument is calibrated regularly by plant personnel.

(3) Scrubber Pressure Drop - The scrubber pressure drop was measured across the inlet and outlet on a continuous basis. Before the tests, the venturi insert position was adjusted to allow the desired pressure drop to be achieved at normal flue gas flows and liquor-to-gas ratios. The pressure drop will vary with gas flow, liquor flow, and insert position.

TABLE 9. BOILER AND SCRUBBER OPERATING PARAMETERS (8/3/81 Run 1)

Time	Steam production (kpph)	Inlet air flow (kpph)	Flue gas oxygen (%)	Flue gas temperature (°F)	Scrubber Pressure drop (in. H_2O)	Scrubber pH	Scrubber liquor flow (gpm)
13:30	(Start)						
13:30	141.4	179.7	8.5	401.0	19.0	6.7	500
13:40	146.5	179.3	8.4	400.5	18.9	6.7	500
13:50	137.8	178.5	8.3	399.4	18.8	6.7	500
14:00	138.7	178.5	8.3	400.0	18.8	6.7	500
14:10	138.6	178.9	8.4	399.1	18.8	6.7	500
14:20	138.6	178.9	8.7	398.4	18.8	6.5[a]	500
14:30	134.8	177.8	8.4	398.2			
14:40	135.3	175.0	8.5	398.4	18.7	6.5	500
14:50	136.1	175.0	8.3	396.1	18.2	6.5	500
15:00	138.2	173.5	7.8	395.0	18.0	6.5	500
15:10	137.3	172.2	7.7	395.2	18.0	6.5	500
15.20	149.2	174.5	7.8	395.2	18.0	6.5	500
15:30	145.6	177.8	8.0	399.1	18.5	6.5	500
15:40	144.5	179.3	7.8	399.4	18.5	6.5	500
15:50	134.9	177.8	7.9	400.0	18.5	6.5	500
16:00	146.5	177.8	8.2	399.4	18.5	6.5	500
16:10	148.7	179.7	8.0	399.8	18.4	6.5	500
16:10	(Finish)						
Mean	141	177	8.2	398	18.5	6.5[a]	500

Average coal feed: 14,025 lb/hr

[a]The pH meter was calibrated between 14:10 and 14:20.

TABLE 10. BOILER AND SCRUBBER OPERATING PARAMETERS (8/4/81 Run 2)

Time	Steam production (kpph)	Inlet air flow (kpph)	Flue gas oxygen (%)	Flue gas temperature (°F)	Scrubber Pressure drop (in. H_2O)	Scrubber pH	Scrubber liquor flow (gpm)
09:30	146.7	174.7	7.2	396.4	19.5	6.5	600
09:35	(Start)						
09:40	140.7	172.8	7.2	395.0	19.0	6.5	580
09:50	148.7	172.5	7.0	393.9	19.2	6.5	600
10:00	149.6	174.1	6.6	395.2	19.5	6.5	600
10:10	155.8	176.9	6.8	398.4	19.6	6.5	600
10:20	152.8	177.1	6.9	399.4	19.7	6.5	600
10:30	151.0	178.2	7.0	399.1	19.8	6.5	600
10:32	Interrupt test - change filters in probe						
10:40	149.6	178.0	7.0	401.2			
10:50	148.6	179.0	7.3	402.6	19.8	6.4	600
11:00	152.8	178.4	7.6	402.3	19.8	6.5	600
11:10	149.8	175.6	7.5	401.0	19.5	6.5	600
11.20	151.4	176.6	7.4	400.3	19.4	6.4	600
11:30	150.5	178.5	7.5	401.6	19.7	6.4	600
11:40	149.9	179.8	7.4	402.3	19.8	6.4	600
11:40	Resume test						
11:50	152.5	177.1	7.1	401.2	19.9	6.4	600
12:00	149.5	180.3	7.4	402.6	20.0	6.4	600
12:10	149.4	180.5	7.6	402.8	19.9	6.4	600
12:20	152.0	180.9	7.5	403.2	19.9	6.4	600
12:30	150.3	178.7	7.6	403.2	19.9	6.4	600
12:40	148.0	182.0	7.9	403.2	19.9	6.4	600
12:50	148.3	180.8	7.7	402.8	19.7	6.5	600
13:00	153.5	178.6	7.7	401.9	19.6	6.4	600
13:10	150.4	177.2	7.4	401.2	19.5	6.4	600
13:20	150.6	177.4	7.4	400.5	19.3	6.5	600
13:20	(Finish)						
Mean	150	180	7.3	400	19.6	6.4	600

Average coal feed: 15,870 lb/hr

TABLE 11. BOILER AND SCRUBBER OPERATING PARAMETERS (8/4/81 Run 3)

Time	Steam production (kpph)	Inlet air flow (kpph)	Flue gas oxygen (%)	Flue gas temperature (°F)	Scrubber Pressure drop (in. H_2O)	Scrubber pH	Scrubber liquor flow (gpm)
15:00	148.2	179.0	7.7	401.0	19.6	6.5	620
15:07	(Start)						
15:10	150.8	177.9	7.5	401.0	19.8	6.5	610
15:17	Interrupt test - change filters in probe						
15:20	145.5	179.2	7.4	401.9	19.7	6.5	620
15:30	149.1	175.9	7.5	401.4	19.7	6.5	620
15:40					19.7	6.5	620
15:50	157.5	179.6	7.3	402.6	19.8	6.5	610
16:00	149.6	180.7	7.6	402.1	20.0	6.5	620
16:10	153.3	181.0	7.6	402.3	20.0	6.5	630
16:10	Resume						
16:20	146.9	182.0	7.5	402.6	20.0	6.5	630
16:30	144.8	180.6	7.5	401.9	20.2	6.5	620
16:40	147.1	179.9	7.5	401.0	20.2	6.6	630
16:50	150.1	181.0	7.2	400.5	20.2	6.6	620
17:00	148.8	181.4	7.2	403.2	20.3	6.6	630
17:10	149.1	180.5	7.5	403.7	20.3	6.6	630
17:20	154.6	182.1	7.6	404.2	20.0	6.6	600
17:29	Interrupt test - replace vacuum pump						

(continued)

TABLE 11 (continued)

Time	Steam production (kpph)	Inlet air flow (kpph)	Flue gas oxygen (%)	Flue gas temperature (°F)	Scrubber Pressure drop (in. H_2O)	Scrubber pH	Scrubber liquor flow (gpm)
17:30	153.4	182.8	7.6	403.7	20.0	6.7	600
17:40	151.1	182.7	7.8	403.2	20.0	6.7	600
17:50	149.8	182.7	7.8	403.5	20.0	6.7	600
17:55	Resume						
18:00	149.9	183.1	7.8	403.7	20.0	6.7	600
18:10	150.6	181.5	8.2	402.3	19.9	6.8	600
18:20	151.5	181.1	7.6	401.9	20.0	6.8	600
18:30	149.8	180.4	7.4	402.8	19.8	6.8	600
18:40	151.7	181.0	7.6	403.0	19.9	6.8	600
18:40	Interrupt test - change filters in probe						
18:50	152.5	180.5	7.5	402.3	19.9	6.8	600
19:00	Resume						
19:00	157.5	182.3	7.5	402.6	19.9	6.8	600
19:10	152.9	178.8	7.6	402.3	19.9	6.8	610
19:20	151.0	180.4	8.0	402.1	19.8	6.8	600
19:21	(Finish)						
Mean	150	181	7.6	402	20.0	6.6	610

Average coal feed: 16,030 lb/hr

(4) Scrubber pH - The pH in the liquor recirculation tank was monitored continuously.

(5) Flue Gas Temperature - The flue gas temperature was monitored at the economizer outlet (mechanical collector inlet). This temperature typically varies with boiler load and serves as a measure of steady operation. Since temperature drop in the mechanical collector is insignificant, this temperature is close to that at the venturi inlet, and will determine the temperature of the quenched gas in the scrubber.

(6) Average Coal Feed Rate - The average coal feed rate reported at the bottom of the table is measured by coal feed integrators. The integrators totaled the number of 0.1-ton buckets of coal fed to the stokers during the tests.

(7) Inlet Air Flow - The total inlet air (underfire and overfire) was monitored continuously during the tests. As coal feed rates were controlled by the air-to-coal ratio, a relatively constant inlet air flow was a reliable measure of steady boiler load and steady flue gas flowrate.

(8) Scrubber Liquor Flow - The flowrate of liquor to the venturi was monitored continuously during the tests. A relatively constant flow is essential to maintaining steady scrubber operation.

COMMENTS ON TESTS

Scrubber Pressure Drop - The venturi was designed for a nominal 17 in H_2O pressure drop. Caterpillar had determined in earlier tests that high pressure drops had negligible effect on removal, and they normally operated the scrubbers with the inserts backed down as far as they would go. This would result in about a 15 in. pressure drop at 75 percent load. The hydraulic units which adjust the inserts were normally shut down, and two of the four units have had the insert removed and replaced with a smaller fixed baffle. Caterpillar plans to do this to all four units eventually.

Also, because the inserts were normally not operated, the instrument which measures insert position on Boiler 19 was out of service. There was no way to physically measure the insert position, and it could not be determined if the insert was at the same position during the tests on 8/4/81 as it was during the test on 8/3/81.

Accuracy of the Data - The control room data logger records data to one decimal place, and this format was repeated in Tables 9 through 11.

SECTION 4

LOCATION OF SAMPLING POINTS

Emissions to the atmosphere from Boiler No. 19 were measured in the smokestack. The coal fed into the boiler was sampled at the end of the two coal feed belts from the coal weighing devices that dump coal into the trip buckets that feed the spreaders.

STACK

Five 10-cm (4-in.) I.D. sampling ports were located on a 32-meter high (106-ft), 2.3-meter (90-in.) I.D. round smokestack, divided in half, with one half for the boiler being tested and the other half for Boiler No. 20 (see Figure 4). The sampling ports are 24 meters (79 ft) above the base of the stack (more than 10 diameters) and 8 meters (27 ft) below the mouth of the stack (more than 3 diameters). The site meets all criteria for an acceptable measurement site for particulate traverses under EPA Method 1 and Method 5 procedures, except for the unusual shape of the inside of the stack.

A 20-point traverse was done at this location, with four points being sampled along each radius of the stack leading to each of the five sample ports (see Figure 5).

COAL FEED SYSTEM

Coal was sampled through the access doors for the two coal feed belts leading to the boiler. Figure 6 shows a schematic diagram and a photograph of the coal sampling site.

1. PORT TO TOP OF STACK 27'
2. MONORAIL FITTING 71" FROM CENTER OF PORT TO TOP OF FITTING
3. CENTER OF PORT TO GRATING OF FLOOR 61"
4. RAILING TO OUTSIDE OF PORT 80"
5. NIPPLE ON PORTS 6-1/4" OUTSIDE, 4" INSIDE

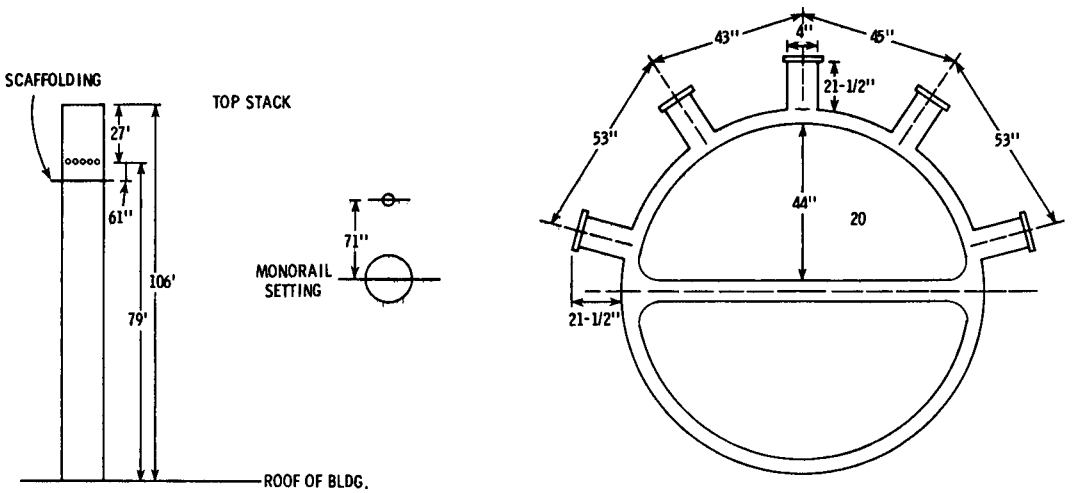

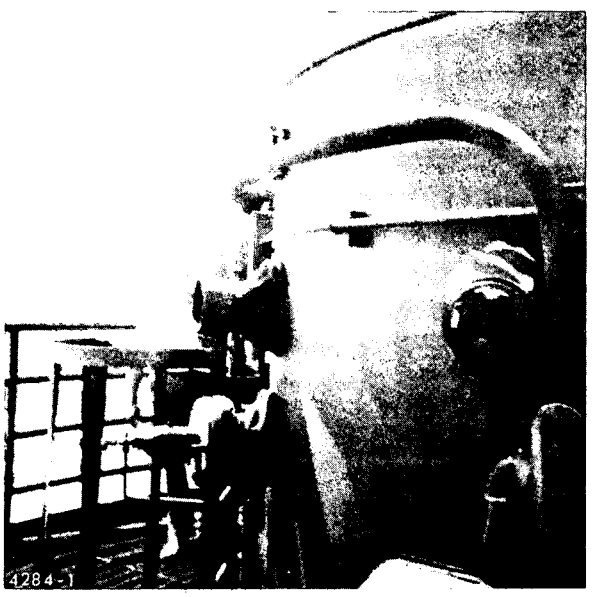

Figure 4. Stack sampling site at Caterpillar Tractor Co. Boiler No. 19 in East Peoria, Illinois.

TRAVERSE POINT No.	DISTANCE FROM INSIDE WALL
1	2.9"
2	9.5"
3	17.5"
4	29.1"

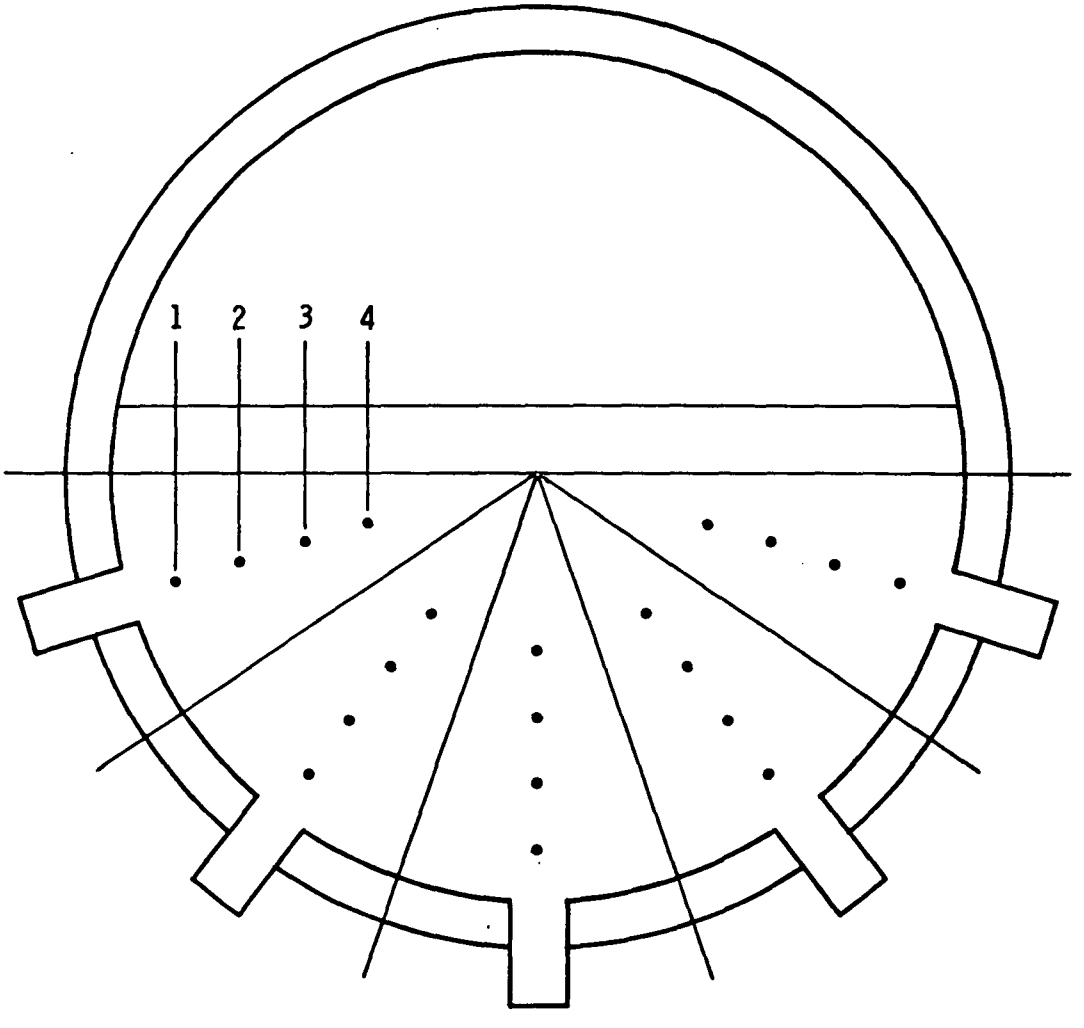

Figure 5. Traverse point locations at Caterpillar Tractor Co. Boiler No. 19 stack in East Peoria, Illinois.

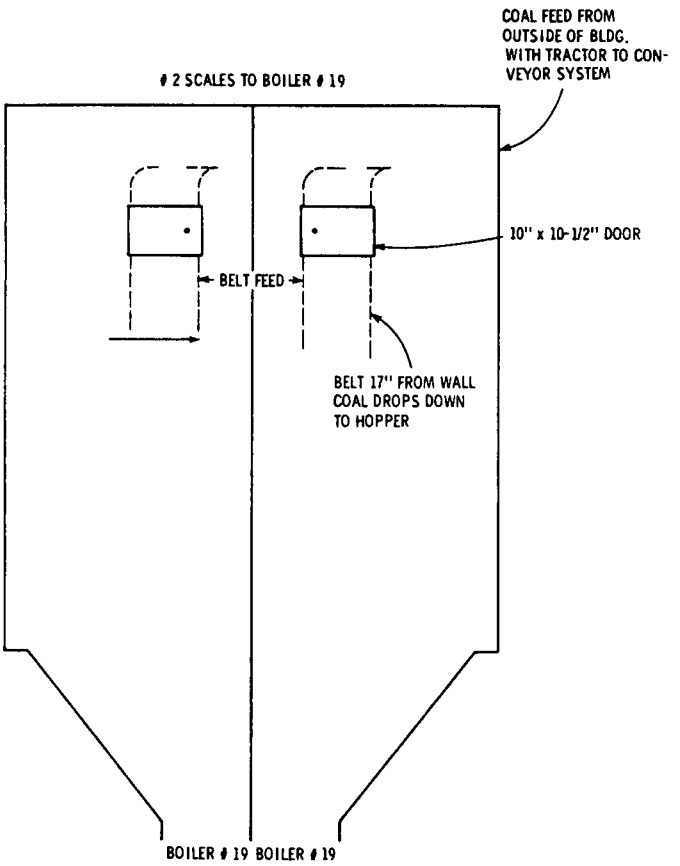

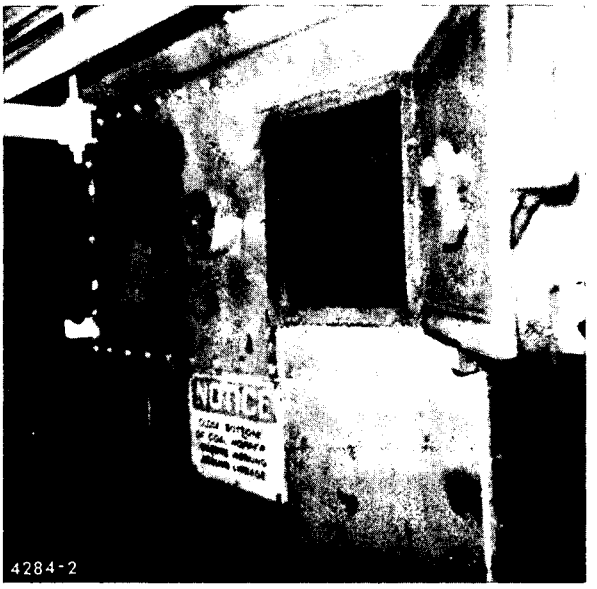

Figure 6. Coal sampling site at Caterpillar Tractor Co. Boiler No. 19 in East Peoria, Illinois.

SECTION 5

SAMPLING AND ANALYTICAL PROCEDURES

SUMMARY

The sampling and analysis methods used at each site are shown in Table 1. Three simultaneous runs of Methods 5 and 5B sampling were made at the stack downstream of all air pollution control equipment. A special dual-probe stack test system with the nozzle centers 4.4 cm (1.75 in.) from each other was used for sampling by Methods 5 and 5B through the same ports. The flue gas velocity, temperature, flow rate, oxygen content, and carbon dioxide content were measured by EPA Methods 1-4 during all Method 5 and 5B stack sampling runs. Integrated Method 3 samples were taken from the exhaust of the Method 5 and the Method 5B trains.

The Method 5 and 5B filters and dried probe washes were dessicated, weighed, baked at 160°C (320°F) for 3 hours, and then weighed again prior to sulfuric acid and sulfate analysis using procedures supplied to MRC by EPA on 10 October 1980.

Grab samples of coal were taken for each stack test by sampling before, during, and after each emission test. The sulfur, ash, moisture, and heat content of the samples were analyzed by ASTM D 3176 and ASTM D 2015-66(72).

STACK SAMPLING

Heated glass-lined probes and Reeve Angel Type 934 AH filters were used for the Method 5 and 5B testing. The filter temperatures were monitored using thermocouples installed on the back half of the filter holders. A special dual-probe stack test system was used for stack testing by Methods 5 and 5B simultaneously through the same individual stack ports. Figure 7 is a schematic diagram of the dual-probe system. The nozzle centers of the Method 5 and 5B trains were 4.4 cm (1.75 in.) apart in this system. A single pitot tube between the Method 5 and 5B sampling probes was used to measure the flue velocity for both trains. Method 3 integrated bag samples were taken from the exhaust of the Method 5 and the Method 5B trains.

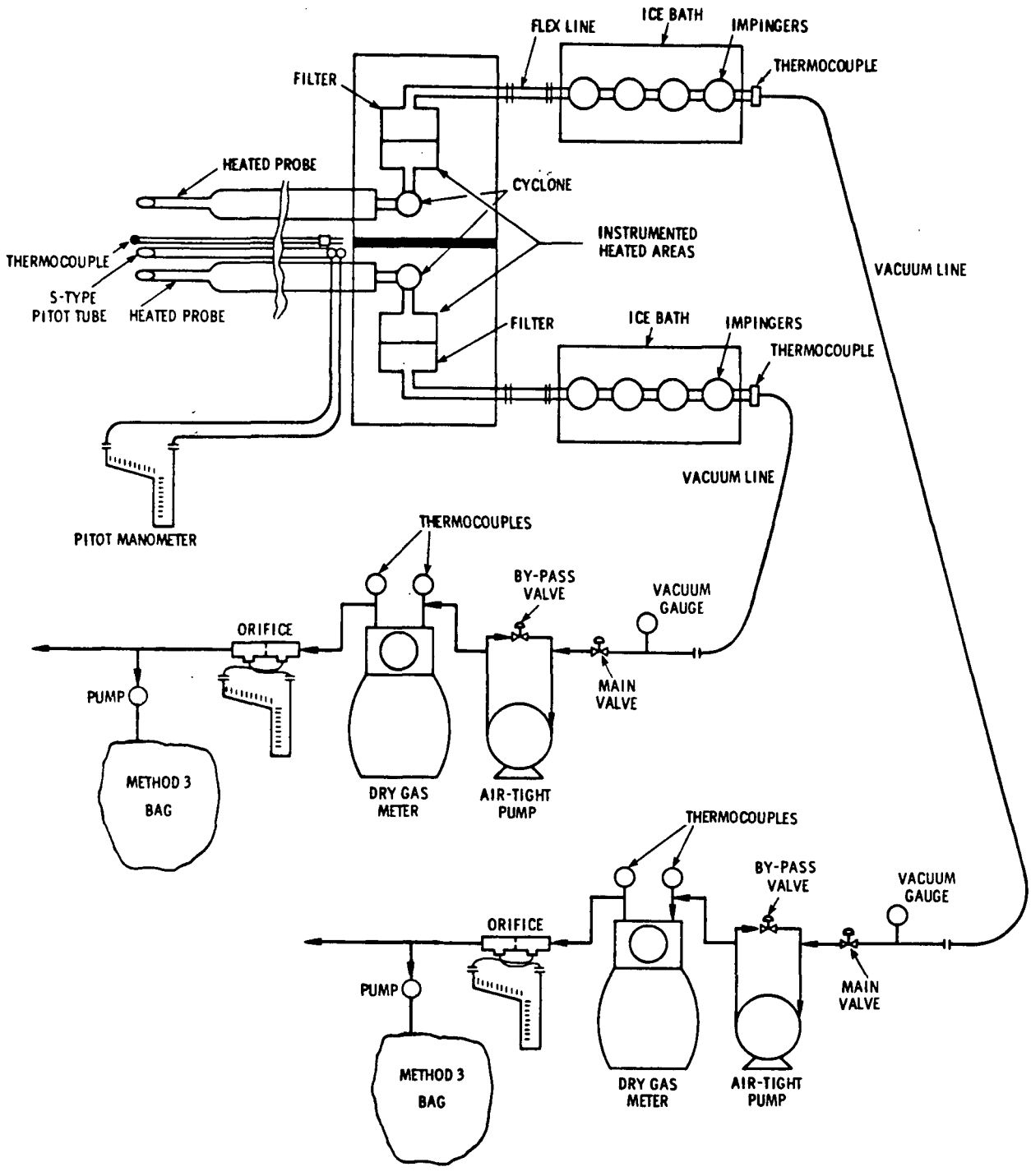

Figure 7. Dual-probe sampling train.

Method 5 and 5B sample volumes of at least 1.06 dry m^3 (37 ft^3) were taken. When Methods 5 and/or 5B were used, Methods 1-4 were also used, as in compliance monitoring.

STACK SAMPLE ANALYSIS

EPA provided the general methods to be used for sulfuric acid and sulfate analysis on the Method 5 and 5B samples at a meeting on 10 October 1980. Gary McAlister clarified these procedures on 24 October 1980, and further refinement of the procedures occurred during the analysis of samples collected during previous emission testing under this work assignment. The procedures used are summarized in Appendix C.

After the probe washes and filters were dried and weighed (using standard Method 5 procedures), the Method 5 and 5B samples were baked at an average temperature of 160°C ± 11°C (320°F ± 20°F) for 3 hours, and then weighed again. This procedure was repeated until the weight of the particulates was within 10 mg of the weight on the previous baking. Samples were baked two to three times before this occurred. Room temperature isopropanol was then added to each sample. The samples were soaked for at least 12 hours. Then the filter in isopropanol was ultrasonically extracted for 30 minutes. The extracts were filtered and analyzed for sulfuric acid using barium-thorin titration. This isopropanol extraction and analysis procedure was performed three times on every sample. Those portions of the extracts that were not titrated were bottled and retained.

After the sulfuric acid extraction with isopropanol, water was added to the filters and solid residues. After they soaked for at least 12 hours, they were ultrasonically extracted for 30 minutes. The extracts were filtered, passed through a Rexyn-101 ion exchange column, and analyzed for sulfates (using barium-thorin titration). The water extraction and sulfate analysis procedure was performed three times on every sample, and the untitrated water extracts were bottled and retained.

After all extractions, the filters and solid residues were dried and saved under nitrogen in a refrigerator, along with the untitrated extracts. These samples will be saved for no more than 6 months.

Blank filters and residue from the evaporation of clean acetone were analyzed when the stack samples were analyzed, along with standards and quality assurance audit samples of sulfate and sulfuric acid.

COAL SAMPLING

Aggregate coal samples, corresponding to the coal burned during each stack sampling run, were taken by grab sampling the coal falling off both coal feed belts before, during, and after every stack sampling run. Figure 8 shows the device used for coal sampling. The individual grab samples were taken by traversing a coal sample container along the entire width of the coal feed belt. The samples weighed about 3 pounds each. The exact timing of the samples corresponded to the timing of the stack sampling adjusted for the delay time between coal falling off the feed belt and coal entering the boiler. The six grab samples per stack sampling run were combined to make one aggregate sample per stack sample run (weighing about 18 pounds). The samples were stored in labeled bottles.

"D" Type Handle Horizontal When Open Top of Box Up

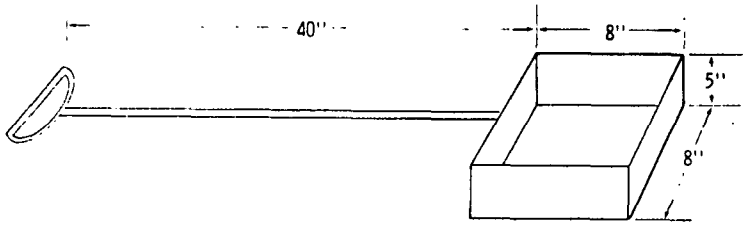

Stainless Steel Open Top Box with Corners Sealed and Rounded Inside and Outside

Figure 8. Coal sampling device.

During one coal sampling run, two separate aggregate coal samples were taken. The second sample was labeled as if it had come from a different run, but separate records were kept to identify which stack sample run it actually was associated with.

COAL ANALYSIS

When the samples were returned for analysis, they were split in half using ASTM D 2013 riffle sampler protocol. Half of each sample was saved and the rest was analyzed. The halves analyzed were homogenized, split, and analyzed for sulfur, moisture, and ash using ASTM D 3176 ultimate analysis protocol. The heating value was determined using ASTM D 2015-66(72) bomb calorimetry.

SAMPLE HANDLING

Filters and impinger contents were transferred into clean, closed containers. Deposits on the inside of the sampling equipment were removed with acetone and distilled water. The acetone rinse was bottled. This occurred at the scaffolding at the stack or in the Company laboratory (inside the boiler house). The coal samples were stored in bottles until ready for analysis. Access to the samples was limited by storing them in a locked truck, except

when being handled by authorized individuals. The samples were shipped in the truck to the MRC Dayton Laboratory for analysis. Records of the chain of custody of the samples were maintained.

DATA REDUCTION

MRC's computer and programmable calculators were used to reduce the analytical and field data to determine results. The "F" values used to determine ng/joule (lb/10^6 Btu) emissions were taken from the boiler emission regulations in 40 CFR 60.45(f)(4)(ii).

Appendix A contains copies of all raw field data sheets and coding sheets for data processing.

Appendix B contains complete computer printouts of the results of the sampling.

Appendix C contains the detailed analytical methods used.

Appendix D contains sample analysis data and a summary of the results of the quality control and assurance procedures.

Appendix E identifies the people performing the sampling, analysis, and data reduction.

QUALITY ASSURANCE

The quality assurance and control program included all applicable procedures specified in the Federal Register for EPA Methods 1 through 5 and the procedures specified in the EPA Guidelines for the Development of Quality Assurance Programs for these methods.

In addition, simultaneous Method 3 samples were taken from the exhaust of both the Method 5 train and the Method 5B train, and the results were used as an indicator of the precision of the Method 3 sampling and analysis.

Standard ASTM procedures were used for the coal analysis. To obtain an indication of the precision of the coal analysis data, two coal samples were taken during the first stack sampling run. The second sample was labeled as if it came from a fourth stack sampling run (with separate records kept showing that it actually was a duplicate of the sample for Run 1). This sample was analyzed along with the other samples, and the results were compared to the results from the run it duplicated as an indicator of the precision of the sampling and analysis. In addition, Bowser-Morner Testing Laboratories, Inc., the coal analysis

subcontractor, participates in EPA's new quality assurance program for coal sulfur, ash, and moisture content. This program involves the analysis of samples provided by EPA.

The accuracy of the data used in computerized data processing was checked by comparing the printout of the data used to calculate results with the raw field data used to code the computer input.

INDUSTRIAL BOILERS

Emission Test Report

CATERPILLAR TRACTOR CO.
BOILER NO. 20
East Peoria, Illinois

December 1-4, 1981

Technical Directives 17 and 18

Prepared for

Environmental Protection Agency
Office of Air Quality Planning and Standards
Emission Measurement Branch
Research Triangle Park
North Carolina 27711

by

Duane R. Day and Windle H. McDonald

Contract No. 68-02-3547, Work Assignment No. 2
(ESED 76/13)
(EMB-81-IBR-14)

July 1982

MONSANTO RESEARCH CORPORATION
DAYTON LABORATORY
Dayton, Ohio 45407

CONTENTS

	Page
Figures	iv
Tables	v
1. INTRODUCTION	1
2. SUMMARY OF RESULTS	4
Description of Monitoring	4
Test Results	4
3. PROCESS DESCRIPTION AND MONITORING	13
Process Description	13
Monitoring	17
Comments on Tests	19
4. LOCATION OF SAMPLING POINTS	21
Stack	21
Coal Feed System	21
5. SAMPLING AND ANALYSIS PROCEDURES	25
Summary	25
Stack Sampling	25
Stack Sample Analyses	27
Coal Sampling	27
Coal Analysis	28
Sample Handling	28
Data Reduction	28
Quality Assurance	29
Appendices	
A. Field Sampling Data Sheets and Computer Coding Forms	A-1
B. Printouts of Sampling Results	B-1
C. Boiler Monitoring Data	C-1
D. Analytical Methods for Sulfuric Acid and Sulfate Determinations	D-1
E. Analytical Data	E-1
F. Project Participants	F-1

FIGURES

Number		Page
1	Location of East Peoria Caterpillar Tractor Co. Plant	2
2	Schematic diagram of Boiler No. 20 and associated systems at the Caterpillar Tractor Co. in East Peoria, Illinois.	3
3	Dual alkali sulfur dioxide removal process at Caterpillar Tractor Co. Boiler No. 20 in East Peoria, Illinois.	16
4	Stack sampling site at Caterpillar Tractor Co. Boiler No. 20 in East Peoria, Illinois. . . .	22
5	Traverse point locations at Caterpillar Tractor Co. Boiler No. 20 stack in East Peoria, Illinois.	23
6	Coal sampling site at Caterpillar Tractor Co. Boiler No. 20 in East Peoria, Illinois. . . .	24
7	Dual-probe sampling train	26

TABLES

Number		Page
1	Source Sampling and Analyses at Caterpillar Tractor Co. Boiler No. 20 in East Peoria, Illinois.	5
2	Emission Data for Caterpillar Tractor Co. Boiler No. 20 in East Peoria, Illinois (Metric Units) (December 1-4, 1981)	6
3	Emission Data for Caterpillar Tractor Co. Boiler No. 20 in East Peoria, Illinois (English Units) (December 1-4, 1981).	7
4	Summary of Differences Between Method 5 and Method 5B Results at Caterpillar Tractor Co. Boiler No. 20 in East Peoria, Illinois (December 1-4, 1981).	9
5	Summary of Duration of Sampling, Stack Temperature, Stack Flow Rate, Sample Volume, Sample Water Content, and Static Pressure at Caterpillar Tractor Co. Boiler No. 20 in East Peoria, Illinois	10
6	Summary of Integrated Gas Analysis Results at Caterpillar Tractor Co. Boiler No. 20 in East Peoria, Illinois (December 1-4, 1981). .	11
7	Summary of Coal Analysis at Caterpillar Tractor Co. Boiler No. 20 in East Peoria, Illinois (December 1-4, 1981).	12
8	Design, Operating, and Performance Characteristics of the Double Alkali Scrubbing System at Caterpillar Tractor Co. Boiler No. 20 in East Peoria, Illinois	15
9	Summary Data and Process Information for Caterpillar Tractor Co. Boiler No. 20 in East Peoria, Illinois.	18

SECTION 1

INTRODUCTION

Emissions from Boiler No. 20 at the Caterpillar Tractor Co. plant at 600 West Washington, East Peoria, Illinois, were tested December 1-4, 1981, by Monsanto Research Corporation (MRC). Figure 1 is a map showing the location of the plant. This work was performed for the Emission Measurement Branch of the U.S. Environmental Protection Agency (EPA) under Contract No. 68-02-3547, Work Assignment No. 2.

The boiler tested was a 70 MW (236 x 10^6 Btu/hr) capacity coal-fired spreader stoker with a traveling grate and an economizer. It was equipped with a mechanical collector, a dual alkali venturi scrubber, and a demister. Figure 2 is a schematic diagram of the installation showing the locations sampled. Previous sampling was performed on Boiler No. 19 at Caterpillar Tractor by MRC in August 1981 under this EPA contract. Boilers 19 and 20 have similar capacities and schematic air flow diagrams. The two boilers share one stack which is divided in half to handle air emissions from each boiler separately. Sampling during December 1-4 was originally scheduled for Boiler No. 19 and later changed to Boiler No. 20 due to a Boiler No. 19 shutdown.

The purpose of the sampling program was to provide background information on well-controlled industrial boilers for the development of new source performance standards. Within this framework the objectives of sampling at Caterpillar Tractor Co. in East Peoria, Illinois were to determine the effect of raising the temperature of the filter and probe on an EPA Method 5 train from 120°C (248°F) to 160°C (320°F) on the amounts of particulate, sulfate, and sulfuric acid emissions measured downstream of the scrubber and demister. Method 5 testing with the filter and probe at 160°C ± 14°C (320°F ± 25°F) will be referred to as Method 5B testing.

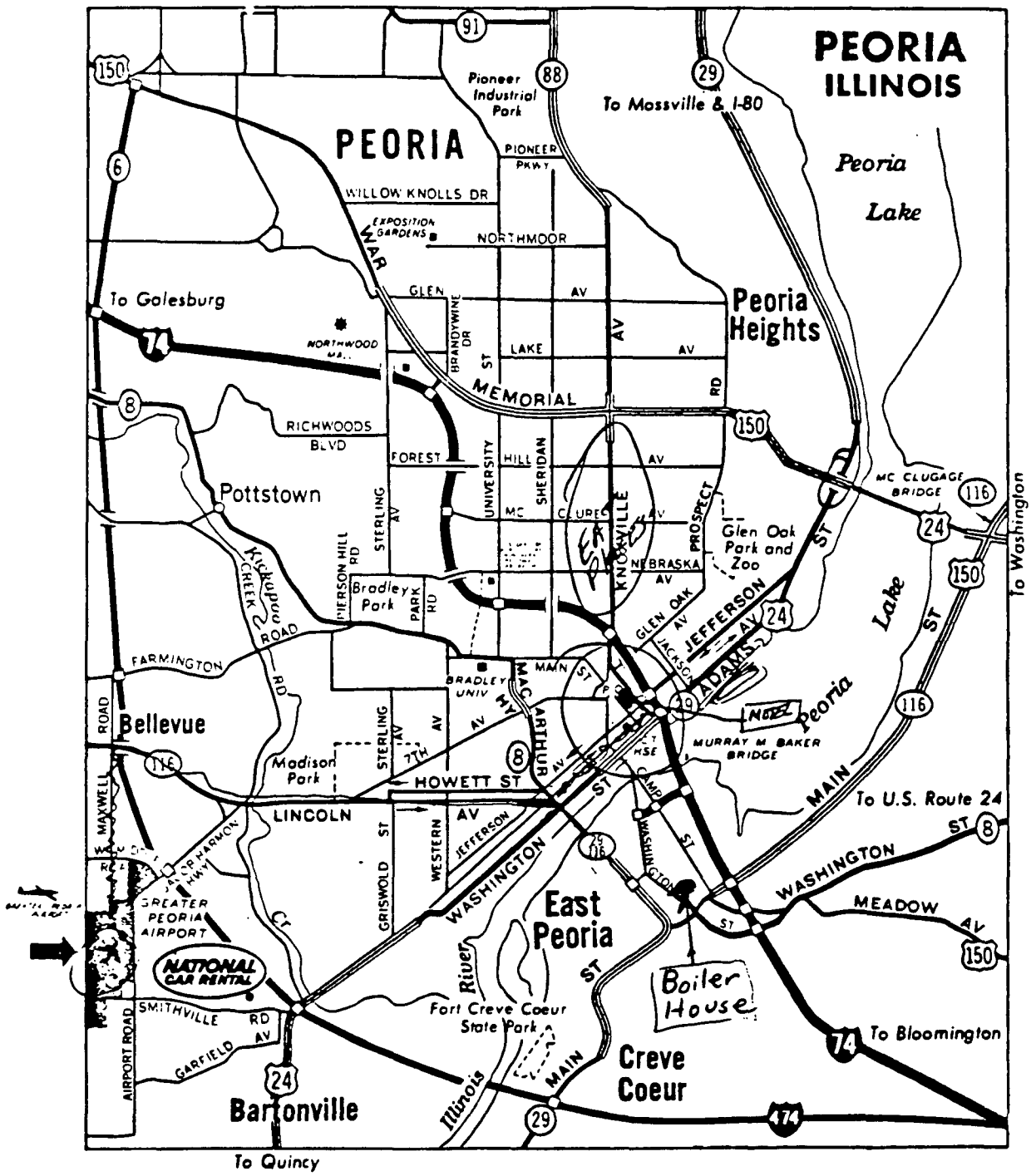

Figure 1. Location of East Peoria Caterpillar Tractor Co. Plant.

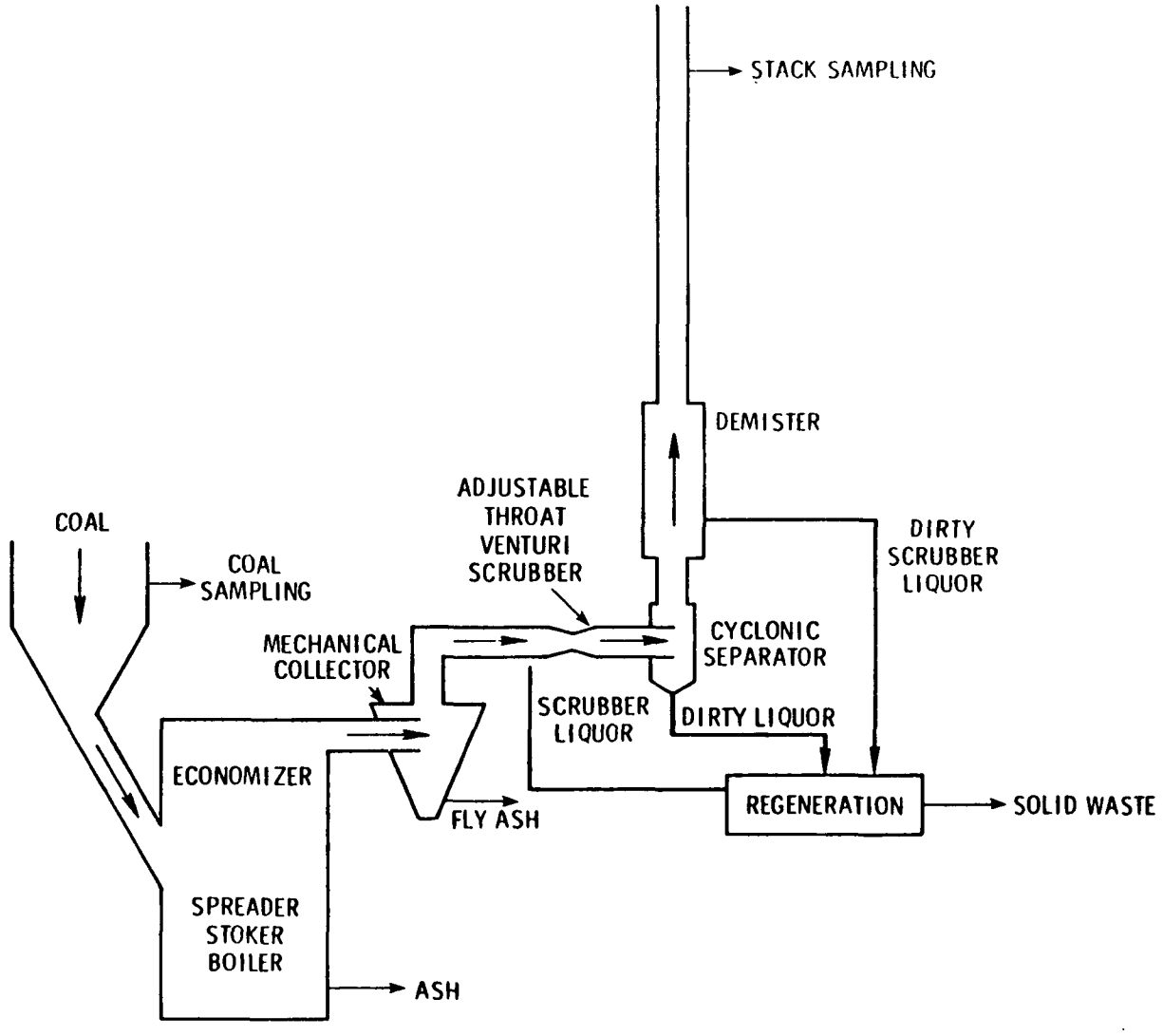

Figure 2. Schematic diagram of Boiler No. 20 and associated systems at the Caterpillar Tractor Co. in East Peoria, Illinois.

SECTION 2

SUMMARY OF RESULTS

DESCRIPTION OF MONITORING

Table 1 summarizes the monitoring that was performed at this plant. It consisted of nine simultaneous runs of Methods 5 and 5B downstream of all pollution control equipment. A special dual-probe stack test system was used for sampling with Methods 5 and 5B simultaneously through the same sample ports with the nozzles spaced 4.4 cm (1.75 in.) apart. Sample volumes of at least 2.1 dry standard m^3 (73 dry standard ft^3) were taken. The boiler was running under steady state conditions (no soot blowing, no ash unloading, etc.) at 60% to 70% of its full capacity during the emission testing.

The coal burned was considered to be representative of normal feed.

The filters and dried acetone washes of the Method 5 and 5B runs were weighed to a constant weight (until the sample weight did not change more than 5 mg between successive weighings) prior to sulfuric acid and sulfates analyses.

Methods 1 through 4 were used during all Method 5 sampling runs, as in typical compliance monitoring.

Grab samples of coal were taken during every run by sampling before, during, and after the run. The grab samples were combined to make one aggregate coal sample for a stack sampling run. The sulfur, ash, moisture, and Btu content of each sample were determined by ASTM D 3176 and ASTM D 2015-66(72).

TEST RESULTS

The particulate, sulfuric acid, and sulfate emissions measured by Methods 5 and 5B are summarized in Tables 2 and 3 (particulate emissions represent all emissions measured by weighing the Method 5 and 5B samples and include sulfuric acid and sulfates). Table 2 also shows the percent isokinetics for each run, which ranged between 96.7% and 103.6%. Table 3 shows the percent of the Method 5 concentrations represented by the Method 5B concentrations measured simultaneously at the same location. Particulate

TABLE 1. SOURCE SAMPLING AND ANALYSES AT CATERPILLAR TRACTOR CO. BOILER NO. 20 IN EAST PEORIA, ILLINOIS

SAMPLING AND ANALYSIS REQUIREMENTS

MRC Job No. 101.1221

Contract No.: 68-02-3547 | **Assignment Number:** 2 ESED 76/13 | **Technical Directive:** 17 and 18

Company Name: Caterpillar Tractor Co. | **Company Location:** East Peoria, Illinois

Industry: Industrial Boiler | **Process:** Coal-Fired Spreader Stoker | **Control Equipment:** Multiclone and Dual Alkali Scrubber

Total no. of samples	Sample type	Sampling method	Sample collected by	Minimum sampling time	Minimum volume gas sampled ft^3	Initial Analysis Type	Initial Analysis Method	Initial Analysis By	Final Analysis Type	Final Analysis Method	Final Analysis By
9	Particulate and bag at exhaust	1-4 & 5B special dual probe train		100 min.	73	Velocity Temp. H_2O, O_2, CO, CO_2	1-4		Particulate	Method 5B	
									SO_3, H_2SO_4	10/10/80 procedure	
9	Particulate and bag at exhaust	1-4 & 5 special dual probe train		100 min.	73	Velocity Temp. H_2O, O_2, CO, CO_2	1-4		Particulate	Method 5	
									SO_3, H_2SO_4	10/10/80 procedure	
10[a]	Coal	Grab		100 min.		Inspection	Visual		Sulfur Ash Btu	ASTM D 3176 ASTM D 2015-66(72)	

Prepared by: Duane R. Day

Date: 12/18/81

Approved by: _____

Date: _____

[a]One aggregate coal sample was taken for every stack sampling run by grab sampling before, during and after the run except for one stack sampling run for which two aggregate coal samples were taken.

TABLE 2. EMISSION DATA FOR CATERPILLAR TRACTOR CO. BOILER NO. 20 IN EAST PEORIA, ILLINOIS (METRIC UNITS) (DECEMBER 1-4, 1981)

Run number	Date	Sampling method	Pollutant	Average emissions Actual g/dscm	kg/hr	ng/J	Corrected[a] to 12% CO_2, g/dscm	Percent isokinetic
4	12-1-81	5	Particulate	0.096	7.4	41.3	0.106	98.9
		5B	Particulate	0.108	8.4	46.6	0.119	102.0
		5	Sulfuric acid	0.011	0.82	4.5	0.012	98.9
		5B	Sulfuric acid	0.010	0.78	4.3	0.011	102.0
		5	Sulfate	0.022	1.7	10.0	0.024	98.9
		5B	Sulfate	0.023	1.8	9.9	0.025	102.0
5	12-2-81	5	Particulate	0.099	8.1	42.4	0.109	96.9
		5B	Particulate	0.092	7.5	39.8	0.101	101.0
		5	Sulfuric acid	0.009	0.74	3.8	0.010	96.9
		5B	Sulfuric acid	0.013	1.03	5.5	0.014	101.0
		5	Sulfate	0.088	2.2	11.5	0.097	96.9
		5B	Sulfate	0.025	2.0	10.6	0.028	101.0
6	12-2-81	5	Particulate	0.064	4.9	27.0	0.069	103.6
		5B	Particulate	0.078	6.0	33.2	0.084	100.4
		5	Sulfuric acid	0.011	0.86	4.7	0.012	103.6
		5B	Sulfuric acid	0.022	1.73	9.4	0.024	100.4
		5	Sulfate	0.021	1.6	8.9	0.023	103.6
		5B	Sulfate	0.024	1.9	10.3	0.026	100.4
7	12-3-81	5	Particulate	0.075	6.0	32.3	0.080	102.2
		5B	Particulate	0.070	5.6	29.9	0.075	100.2
		5	Sulfuric acid	0.010	0.83	4.4	0.011	102.2
		5B	Sulfuric acid	0.009	0.72	3.8	0.010	100.2
		5	Sulfate	0.020	1.6	8.6	0.021	102.2
		5B	Sulfate	0.019	1.5	7.9	0.020	100.2
8	12-3-81	5	Particulate	0.072	5.7	31.0	0.077	100.4
		5B	Particulate	0.066	5.3	28.3	0.071	99.2
		5	Sulfuric acid	0.011	0.91	4.9	0.012	100.4
		5B	Sulfuric acid	0.011	0.86	4.5	0.012	99.2
		5	Sulfate	0.023	1.8	10.0	0.025	100.4
		5B	Sulfate	0.022	1.8	9.5	0.024	99.2
9	12-3-81	5	Particulate	0.062	4.8	26.9	0.066	100.0
		5B	Particulate	0.060	4.5	25.7	0.064	102.9
		5	Sulfuric acid	0.007	0.51	2.8	0.008	100.0
		5B	Sulfuric acid	0.007	0.52	3.0	0.008	102.9
		5	Sulfate	0.015	1.2	6.6	0.016	100.0
		5B	Sulfate	0.016	1.2	6.7	0.017	102.9
10	12-4-81	5	Particulate	0.069	5.6	29.8	0.074	100.9
		5B	Particulate	0.069	5.6	29.7	0.074	96.7
		5	Sulfuric acid	0.017	1.3	7.3	0.018	100.9
		5B	Sulfuric acid	0.009	0.73	3.8	0.010	96.7
		5	Sulfate	0.021	1.7	9.0	0.023	100.9
		5B	Sulfate	0.018	1.5	7.7	0.019	96.7
11	12-4-81	5	Particulate	0.081	6.6	35.7	0.089	97.3
		5B	Particulate	0.057	4.7	25.1	0.063	99.1
		5	Sulfuric acid	0.012	0.9	5.1	0.013	97.3
		5B	Sulfuric acid	0.009	0.73	3.8	0.010	99.1
		5	Sulfate	0.024	2.0	10.6	0.026	97.3
		5B	Sulfate	0.020	1.7	8.8	0.020	99.1
12	12-4-81	5	Particulate	0.096	8.0	41.4	0.104	99.7
		5B	Particulate	0.067	5.6	28.9	0.072	101.0
		5	Sulfuric acid	0.027	2.2	11.4	0.029	99.7
		5B	Sulfuric acid	0.016	1.3	6.9	0.017	101.0
		5	Sulfate	0.024	2.0	10.3	0.026	99.7
		5B	Sulfate	0.021	1.7	9.0	0.023	101.0

[a]This is the concentration normalized to 12% CO_2. $C = C \times \frac{12}{\%CO_2}$; where C is the measured concentration in the stack, and $\%CO_2$ is the percent CO_2 measured in the stack.

TABLE 3. EMISSION DATA FOR CATERPILLAR TRACTOR CO. BOILER NO. 20 IN EAST PEORIA, ILLINOIS (ENGLISH UNITS) (DECEMBER 1-4, 1981)

Run number	Date	Sampling method	Pollutant	Average emissions Actual gr/dscf	lb/hr	lb/mm Btu	Corrected to 12% CO_2,[a] gr/dscf	Percent of Method 5 gr/dscf represented by Method 5B gr/dscf at outlet
4	12-1-81	5	Particulate	0.042	16.4	0.096	0.046	
		5B	Particulate	0.047	18.5	0.108	0.052	112
		5	Sulfuric acid	0.005	1.80	0.011	0.006	
		5B	Sulfuric acid	0.004	1.71	0.010	0.004	80
		5	Sulfate	0.010	3.82	0.022	0.011	
		5B	Sulfate	0.010	3.94	0.023	0.011	100
5	12-2-81	5	Particulate	0.043	17.8	0.098	0.047	
		5B	Particulate	0.040	16.4	0.092	0.044	93
		5	Sulfuric acid	0.004	1.63	0.009	0.004	
		5B	Sulfuric acid	0.006	2.27	0.013	0.007	150
		5	Sulfate	0.038	4.86	0.027	0.042	
		5B	Sulfate	0.011	4.39	0.025	0.012	29
6	12-2-81	5	Particulate	0.028	10.8	0.063	0.030	
		5B	Particulate	0.034	13.4	0.077	0.036	121
		5	Sulfuric acid	0.005	1.89	0.011	0.005	
		5B	Sulfuric acid	0.010	3.80	0.022	0.011	200
		5	Sulfate	0.009	3.55	0.021	0.010	
		5B	Sulfate	0.011	4.11	0.024	0.012	122
7	12-3-81	5	Particulate	0.033	13.2	0.074	0.035	
		5B	Particulate	0.030	12.3	0.069	0.032	91
		5	Sulfuric acid	0.005	1.83	0.010	0.005	
		5B	Sulfuric acid	0.004	1.59	0.009	0.004	80
		5	Sulfate	0.009	3.55	0.019	0.010	
		5B	Sulfate	0.008	3.29	0.018	0.009	89
8	12-3-81	5	Particulate	0.031	12.7	0.072	0.033	
		5B	Particulate	0.029	11.6	0.066	0.032	94
		5	Sulfuric acid	0.005	2.01	0.011	0.005	
		5B	Sulfuric acid	0.005	1.89	0.011	0.005	100
		5	Sulfate	0.010	4.07	0.023	0.011	
		5B	Sulfate	0.010	3.90	0.022	0.011	100
9	12-3-81	5	Particulate	0.027	10.7	0.062	0.029	
		5B	Particulate	0.026	10.0	0.060	0.028	96
		5	Sulfuric acid	0.003	1.12	0.007	0.003	
		5B	Sulfuric acid	0.003	1.15	0.007	0.003	100
		5	Sulfate	0.007	2.63	0.015	0.008	
		5B	Sulfate	0.007	2.60	0.016	0.008	100
10	12-4-81	5	Particulate	0.030	12.3	0.069	0.032	
		5B	Particulate	0.030	12.5	0.069	0.032	100
		5	Sulfuric acid	0.007	3.00	0.017	0.008	
		5B	Sulfuric acid	0.004	1.60	0.009	0.004	57
		5	Sulfate	0.009	3.73	0.021	0.010	
		5B	Sulfate	0.008	3.21	0.018	0.009	89
11	12-4-81	5	Particulate	0.036	14.6	0.085	0.041	
		5B	Particulate	0.025	10.3	0.059	0.028	69
		5	Sulfuric acid	0.005	2.08	0.012	0.006	
		5B	Sulfuric acid	0.004	1.61	0.009	0.005	80
		5	Sulfate	0.011	4.33	0.025	0.013	
		5B	Sulfate	0.009	3.65	0.020	0.010	82
12	12-4-81	5	Particulate	0.042	17.6	0.097	0.045	
		5B	Particulate	0.029	12.3	0.067	0.031	69
		5	Sulfuric acid	0.011	4.87	0.027	0.012	
		5B	Sulfuric acid	0.007	2.93	0.016	0.008	64
		5	Sulfate	0.010	4.35	0.024	0.011	
		5B	Sulfate	0.009	3.83	0.021	0.010	90

[a]This is the concentration normalized to 12% CO_2. $C = C \times \frac{12}{\%CO_2}$; where C is the measured concentration in the stack, and $\%CO_2$ is the percent CO_2 measured in the stack.

concentrations measured by Method 5B were between 69% and 121% of those measured by Method 5. Sulfuric acid concentrations measured by Method 5B were 57% to 200% of the Method 5 concentrations. Sulfate concentrations measured by Method 5B were 29% to 122% of the Method 5 concentrations.

Table 4 summarizes the differences between particulate emissions measured by Methods 5 and 5B as represented by sulfuric acid and sulfate emissions. It is expected that the difference between particulate emissions measured by Methods 5 and 5B be greater than the values listed in Table 4. This difference is noted in the above paragraph where Method 5B particulate concentrations were 69% to 121% of Method 5 particulate concentrations. The probable cause for these values is that the sulfuric acid concentration in the Method 5 samples are lower than expected, based on previous tests performed at Caterpillar, resulting in lower particulate concentrations (particulate concentrations include sulfuric acid and sulfate concentrations). The cause for low sulfuric acid concentrations is uncertain.

Table 5 summarizes sampling duration, stack temperature, flow rate, static pressure, and sample volume and water content. Run 12 was stopped after 60 minutes of sampling due to failure of the probe to maintain temperature.

Table 6 summarizes integrated gas analysis results. Integrated Method 3 samples were taken from the exhaust of the Method 5B train.

Table 7 summarizes the coal analysis results for percent moisture, heating value, percent ash, and percent sulfur content.

TABLE 4. SUMMARY OF DIFFERENCES BETWEEN METHOD 5 AND METHOD 5B RESULTS AT CATERPILLAR TRACTOR CO. BOILER NO. 20 IN EAST PEORIA, ILLINOIS (DECEMBER 1-4, 1981)

Run number	Pollutant	Method 5 minus Method 5B emissions kg/hr	Method 5 minus Method 5B emissions lb/hr	Percent of difference in particulate emissions kg/hr (lb/hr) represented by difference in sulfuric acid emissions	Percent of difference in particulate emissions kg/hr (lb/hr) represented by difference in sulfuric acid and sulfates combined
4	Particulate	-1.0	-2.1		
	Sulfuric acid	0.04	0.09	-4[a]	
	Sulfate	-0.1	-0.12		
	Sulfuric acid and sulfate	-0.06	-0.03		6[a]
5	Particulate	0.6	1.4		
	Sulfuric acid	-0.29	-0.64	-48[a]	
	Sulfate	5.2	11.51		
	Sulfuric acid and sulfate	4.91	10.87		818[a]
6	Particulate	-1.1	-2.6		
	Sulfuric acid	-0.87	-1.91	79[a]	
	Sulfate	-0.3	-0.56		
	Sulfuric acid and sulfate	-1.17	-2.47		106[a]
7	Particulate	0.4	0.9		
	Sulfuric acid	0.11	0.24	28	
	Sulfate	0.1	0.26		
	Sulfuric acid and sulfate	0.21	0.50		53
8	Particulate	0.4	1.1		
	Sulfuric acid	0.05	0.12	13	
	Sulfate	0.0	0.17		
	Sulfuric acid and sulfate	0.05	0.29		13
9	Particulate	0.3	0.7		
	Sulfuric acid	0.03	-0.03	10	
	Sulfate	0.0	0.03		
	Sulfuric acid and sulfate	0.03	0.0		10
10	Particulate	0.0	-0.2		
	Sulfuric acid	0.57	1.4	>100[a]	
	Sulfate	0.2	0.52		
	Sulfuric acid and sulfate	0.77	1.92		>100[a]
11	Particulate	1.9	4.3		
	Sulfuric acid	0.17	0.47	9	
	Sulfate	0.3	0.68		
	Sulfuric acid and sulfate	0.47	1.15		25
12	Particulate	2.4	5.3		
	Sulfuric acid	0.9	1.94	38	
	Sulfate	0.3	0.52		
	Sulfuric acid and sulfate	1.2	2.46		50

[a]Note Method 5B emissions are greater than or equal to Method 5 emissions.

TABLE 5. SUMMARY OF DURATION OF SAMPLING, STACK TEMPERATURE, STACK FLOW RATE, SAMPLE VOLUME, SAMPLE WATER CONTENT, AND STATIC PRESSURE AT CATERPILLAR TRACTOR CO. BOILER NO. 20 IN EAST PEORIA, ILLINOIS

Run number	Sampling method	Duration of sampling, min	Measured stack temperature		Stack flow rate		Sample volume		Sample water content, %	Stack static pressures	
			°C	°F	dscm/min	dscf/min	dscm	dscf		cm H_2O	in. H_2O
4	5	100	59	139	1,290	45,600	2.1	73.9	17.1	-2.49	-0.98
	5B	100	59	139	1,290	45,700	2.5	88.8	16.8	-2.49	-0.98
5	5	100	54	129	1,370	48,400	2.2	76.9	14.6	-2.49	-0.98
	5B	100	54	129	1,350	47,500	2.6	91.3	16.6	-2.49	-0.98
6	5	100	54	129	1,280	45,100	2.2	76.7	19.2	-2.49	-0.98
	5B	100	54	129	1,300	45,800	2.5	87.7	17.6	-2.49	-0.98
7	5	100	54	129	1,330	46,800	2.2	78.4	17.6	-2.49	-0.98
	5B	100	54	129	1,340	47,200	2.6	90.1	16.8	-2.49	-0.98
8	5	100	54	129	1,330	47,000	2.2	77.4	17.8	-2.49	-0.98
	5B	100	54	129	1,340	47,300	2.5	89.5	17.2	-2.49	-0.98
9	5	100	54	129	1,290	45,600	2.1	74.8	17.4	-2.49	-0.98
	5B	100	54	129	1,260	44,600	2.5	87.4	19.5	-2.49	-0.98
10	5	100	53	128	1,350	47,500	2.1	78.7	17.6	-2.49	-0.98
	5B	100	53	128	1,370	48,300	2.5	89.0	15.9	-2.49	-0.98
11	5	100	53	128	1,360	48,100	2.1	76.8	17.1	-2.49	-0.98
	5B	100	53	128	1,380	48,800	2.6	92.1	15.7	-2.49	-0.98
12	5	60	54	130	1,380	48,800	1.3	47.9	17.4	-2.49	-0.98
	5B	60	54	130	1,390	48,900	1.6	56.4	17.3	-2.49	-0.98

TABLE 6. SUMMARY OF INTEGRATED GAS ANALYSIS RESULTS AT CATERPILLAR TRACTOR CO. BOILER NO. 20 IN EAST PEORIA, ILLINOIS (DECEMBER 1-4, 1981)

Run number	CO_2, %	CO, %	O_2, %	N_2, %	Dry molecular weight, kg/kg mole (lb/lb mole)
4	10.9	0.0	8.1	81.0	28.0
5	10.9	0.0	8.1	81.0	28.3
6	11.2	0.0	7.9	80.9	27.8
7	11.2	0.0	8.1	80.8	28.0
8	11.2	0.0	8.1	80.8	28.0
9	11.2	0.0	8.1	80.8	28.0
10	11.2	0.0	8.1	80.8	28.0
11	10.9	0.0	8.4	80.7	28.0
12	11.1	0.0	8.1	80.7	28.0

TABLE 7. SUMMARY OF COAL ANALYSIS AT CATERPILLAR TRACTOR CO. BOILER NO. 20 IN EAST PEORIA, ILLINOIS (DECEMBER 1-4, 1981)

Run number	Total moisture, percent	Heating value				Ash, percent		Sulfur, percent	
		Joule/gram		Btu/lb					
		dry	as received	dry	as received	dry	as received	dry	as received
4	17.0	29,390	24,400	12,650	10,500	12.7	10.6	3.0	2.5
5	16.4	29,310	24,510	12,620	10,550	11.9	10.0	3.3	2.8
6	15.1	29,610	25,130	12,740	10,820	12.1	10.2	2.6	2.2
7	16.0	29,080	24,420	12,520	10,510	12.3	10.4	2.9	2.5
8	15.9	29,750	25,010	12,800	10,760	11.7	9.8	3.0	2.5
9	16.2	29,430	24,660	12,670	10,610	12.3	10.3	2.8	2.3
10	14.4	29,640	25,360	12,760	10,920	12.1	10.3	2.6	2.2
11	16.3	28,830	24,120	12,410	10,380	14.1	11.8	3.7	3.1
12	16.3	29,570	24,760	12,730	10,660	12.0	10.0	3.4	2.8

SECTION 3

PROCESS DESCRIPTION AND MONITORING
(supplied by Radian Corp.)

PROCESS DESCRIPTION

Boiler System

The boiler house at Caterpillar's East Peoria Plant contains four traveling-grate, spreader-stoker boilers (Boilers No. 19, 20, 21, and 22). The boilers supply 150 psi steam (about 350°F) into a common plant steam header for use in steam cleaning, space heating, and other operations. During the summer of 1981 Boiler No. 19 was tested. During the December 1981 test period, Boiler No. 19 was down for scheduled maintenance outage and Boilers No. 20 and 21 were operating. Boiler No. 20 is very similar to Boiler No. 19 and was chosen for the December test. The boilers burn high sulfur (about 3%) bituminous coal from several local sources. Untreated flue gas contains about 2,000 ppm SO_2.

Boiler No. 20 was installed in 1957, with a maximum continuous rating of 200,000 pounds per hour of steam. It is a Springfield boiler with an American Engineering traveling grate spreader stoker and is equipped with economizers and mechanical dust collectors. The flue gas temperature at the economizer discharge is about 400°F. Caterpillar personnel in the boiler house indicated that the unit has been modified several times since installation, but that most of these modifications were to improve reliability and simplify maintenance on the traveling grate mechanism. During the tests, the boiler was operated at about 180,000 pounds per hour of steam.

Scrubber System

Each boiler is equipped with a dual-throat venturi scrubber for particulate and SO_2 control. The scrubbers are part of an FMC Dual Alkali regenerable liquor scrubbing system. Gas flows through the throat of the venturi and is thoroughly mixed with scrubbing liquor. Sulfur dioxide is absorbed into the liquor while fly ash particles adhere to the liquor droplets. The gas then passes into a cyclonic-flow separator where the liquor droplets are disengaged and fall to the bottom of the separator. The gas passes through a wire-mesh mist eliminator at the top of

the separator before entering the stack. Table 8 lists design and operating features of the scrubber system. Figure 3 shows a flow diagram of the scrubbers and liquor regeneration system. Sulfur dioxide is absorbed into a "concentrated" alkaline liquor containing sodium ions from soda ash (about 1 molar), sulfite and bisulfite ions from absorbed SO_2 (about 0.6 molar total), and sulfate ions from oxidation of sulfite (about 0.4 molar). SO_2 is absorbed and forms sulfite and bisulfite ions by several reactions:

$$H_2O + SO_2^{=} \text{ (sulfite ion)} + SO_3^{=} \text{ (gas)} \longrightarrow 2HSO_3^{-} \text{ (bisulfite ions)}$$

$$SO_2 \text{ (g)} + H_2O \longrightarrow H_2SO_3 \text{ (sulfurous acid)}$$

$$H_2SO_3 + OH^{-} \longrightarrow HSO_3^{-} + H_2O$$

Sodium serves to balance the acidity of the sulfite ions, providing alkalinity and thus improving the solubility of SO_2. Sulfite and bisulfite ions maintain an equilibrium via the following reaction:

$$SO_3^{=} + H_2O \rightleftharpoons + HSO_3^{-} + OH^{-}$$

Temperature, pH, and total concentration affect this equilibrium. At typical operating conditions, about half of the dissolved SO_2 will be in each form. This reaction provides a pH "buffering" effect which allows the liquor to absorb SO_2 in the scrubber loop without a severe drop in pH (loss of alkalinity). When oxygen in the flue gas dissolves in the liquor, a small portion of the bisulfite is oxidized to form nonregenerable sulfate ions:

$$1/2\ O_2 + HSO_3^{-} \longrightarrow SO_4^{=} + H^{+}$$

Sulfite-rich solution is bled continuously from the scrubbing loop to the regeneration system. The solution is reacted with slaked lime (calcium hydroxide) to precipitate calcium sulfite:

$$Ca^{++} + SO_3^{=} + 1/2\ H_2O \longrightarrow CaSO_3 \cdot 1/2\ H_2O \downarrow$$

TABLE 8. DESIGN, OPERATING, AND PERFORMANCE CHARACTERISTICS OF THE DOUBLE ALKALI SCRUBBING SYSTEM AT CATERPILLAR TRACTOR CO. BOILER NO. 20 IN EAST PEORIA, ILLINOIS

Fuel	Approximately 10,000 Btu/lb, 3% sulfur coal
Scrubber	Single dual-throat venturi followed by separator. Adjustable insert had been welded in a fixed position.
Process mode	Concentrated liquor
Scrubber pressure drop	Throat insert in a fixed position. Pressure drop during this period ranged from 17 in. to 18 in. of water.
Inlet	
Flow rate	Load-dependent. 185,000 to 189,000 pounds per hour of air during test period. Approximately 85% to 95% of full boiler load.
SO_2	Approximately 2,000 ppm
O_2	Varies. 6.9% to 7.7% during tests as measured just prior to ID fan.
Particulate	Not available
SO_2 outlet	150 ppm to 200 ppm (design)
Scrubbing solution	
pH	5.9 to 6.4 during test period
Total sodium	Approximately 1 molar
Active sodium	Approximately 0.3 molar
Soda ash makeup	35 to 40 pounds per ton of coal
Lime utilization	2.4 mole/mole S in cake
Filter cake solids	60% solid
Filter cake disposal	Offsite

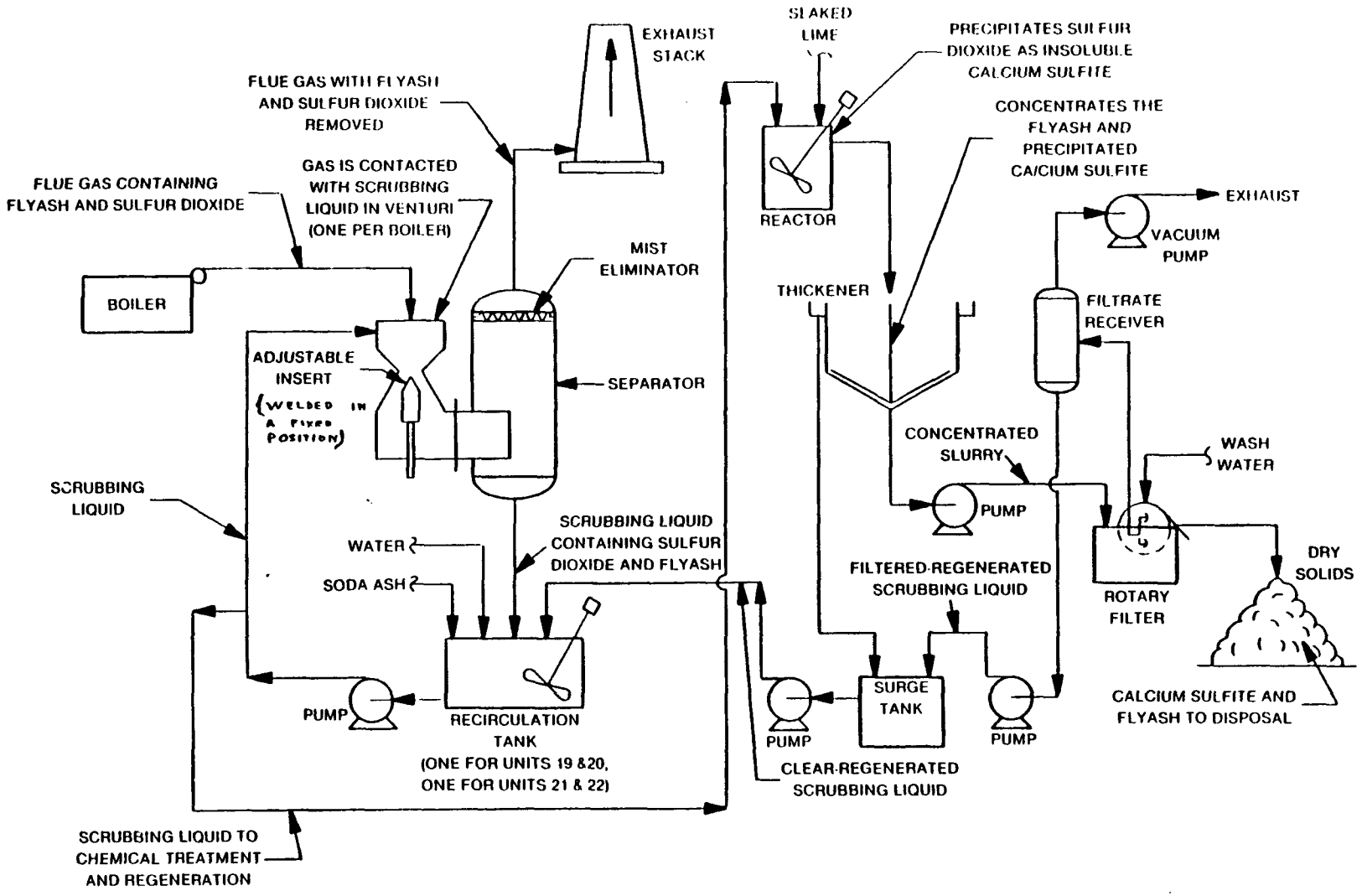

Figure 3. Dual alkali sulfur dioxide removal process at Caterpillar Tractor Co. Boiler No. 20 in East Peoria, Illinois.

The solution is then sent to a thickener where fly ash and calcium sulfite solids settle out. A rotary drum vacuum filter dries the thickener underflow slurry to a cake containing 60 to 70 weight percent solids. The cake is disposed of off-site by an independent contractor and the filtrate is combined with thickener overflow in the surge tanks. Clear, regenerated liquor from the surge tanks is returned to the scrubbers.

MONITORING

The boiler and scrubber processes were monitored during testing for the following reasons:

- To insure that the boiler was operating at a relatively steady state;
- To insure that the boiler was operating within normal tolerances;
- To insure that the scrubber was operating normally at or near the desired pressure drop and that no liquor feed abnormalities occurred;
- To record process data used in determining emission rates (pounds emitted/MM Btu);
- To record process data used as a qualitative guideline to document normal boiler operation.

Several process parameters were monitored during emissions testing. Table 9 is a summary of these data. Most of the data was recorded at 15 minute intervals and these log sheets are in Appendix C. The process parameters recorded are described in the following list. Comments on parameters which appear abnormal are included in the comment section.

(1) Steam Production Rates - The steam production rate was recorded by a continuous monitor. The pressure in the steam supply header was between 161 psig and 165 psig during all tests. Steam production rates did not vary more than ±5% from the averages indicated in Table 9.

(2) Flue Gas Oxygen - The oxygen content in the flue gas was monitored on a continuous basis by a thermal analyzer at the inlet to the induced draft fan. A portable Teledyne instrument was used to measure oxygen content just after the economizers. These spot checks are tabulated in Table 9.

TABLE 9. SUMMARY DATA AND PROCESS INFORMATION FOR CATERPILLAR TRACTOR CO. BOILER NO. 20 IN EAST PEORIA, ILLINOIS

Run	Test time Start	Test time Finish	Scrubber GPH	Scrubber ΔP in water	Scrubber pH	Steam, psig	Coal used, tons/min	Steam flow, M lbs/hr	Economizer temperature, °F	HC ΔP, in H_2O	Percent oxygen Average at breeching	Percent oxygen Check with Teledyne	Combustion air flow, M lbs/hr	Steam temperature, °F	Furnace pressure, in. of water	Bottom ash hauled	Soot blow	Demister Back wash	Demister ΔP, in water	Date
4	1352	1605	400	17	6.4 6.4[a]	162	0.157	174	402	2.8	7.7	7.7	186	347	0.2	√	√	√	0.8	12/1/81 Prior to test
5	0820	1020	400	18	6.2 6.2[b]	-	0.156	174	401	2.8	7.5	7.5	186	346	0.2	√	√	√		12/2/81 0730 to 0815
6	1320	1517	400	18	6.2	165	0.149	169	401	2.8	7.5	7.3	185	348	0.2	√	√	√	1.0 1.0[c]	Prior to test
7	0740	0930	500 400 400	18.5 17	6.0 5.9[d]	165	0.152	174	403	2.8	7.2	6.5-7.0	187	347	0.3	√	√	√	1.0	12/3/81 Prior to test
8	1100	1248	400	17	6.0 6.1[e]	165	0.161	180	403	2.8	7.0		186	348	0.2	√		√	1.0	Prior to test
9	1401	1553	400	17	6.1 6.2[e]	165	0.169	182	402	2.8	6.9		185	348	0.3	√		√	1.0 1.0	Prior to test
10	0750	0946	400	17	6.1 6.1[e]	161	0.157[f]	180	405	2.9	7.8		189	346	0.3				0.9	12/4/81
11	1102	1257	400	17	6.0 6.0[e]	162	0.157[f]	179	405	2.9	7.7	5.0 5.5	189	348	0.2					Prior to test
12	1443	1550	400	17	6.0	163	0.158													

[a]Lab checked pH 6.4, 6.4 and 6.3 (1200, 1400, 1600).

[b]Lab check 0800, 1000.

[c]Backwashed demister 5 minutes. No change in ΔP.

[d]Lab check 0800.

[e]Lab check.

[f]Based on average during 0730 to 1415.

(3) Scrubber Pressure Drop - The scrubber pressure drop was measured across the inlet and outlet on a continuous basis. Before the tests, the venturi insert position had been adjusted to fully open and fixed in this position by welding the adjusting mechanism. The pressure drop will vary with gas and liquor flow.

(4) Scrubber pH - The pH in the liquor recirculation tank was monitored continuously.

(5) Flue Gas Temperature - The flue gas temperature was monitored at the economizer outlet (mechanical collector inlet). This temperature typically varies with boiler load and serves as a measure of steady operation. Since temperature drop in the mechanical collectors is insignificant, this temperature is close to that at the venturi inlet, and will determine the temperature of the quenched gas in the scrubber.

(6) Average Coal Feed Rate - The average coal feed rate reported is measured by coal feed integrators. The integrators totaled the number of 0.1-tons buckets of coal fed to the stokers during the tests.

(7) Inlet Air Flow - The total inlet air (underfire and overfire) was monitored continuously during the tests. A relatively constant inlet air flow was a reliable measure of steady boiler load and steady flue gas flow rate. Changes in inlet air temperature can be expected to affect the accuracy of such instrumentation. The degree to which these changes did affect the accuracy is unknown.

(8) Scrubber Liquor Flow - The flow rate of liquor to the venturi was monitored continuously during the tests. A relatively constant flow is essential to maintaining steady scrubber operation.

COMMENTS ON TESTS

Accuracy of the Data

The control room data logger records data to one decimal place, and this format was repeated in Table 9. At the conclusion of the test, the coal feed system was checked and found to be weighing correctly. The thermal analyzer was used to continuously monitor oxygen content in the flue gas. The instrument is calibrated regularly by plant personnel. No other special calibrations of the boiler instrumentation were performed.

As previously discussed, a portable Teledyne instrument was used to measure oxygen content just after the economizers. These spot checks, as tabulated in Table 9, compare closely with the continuous log of the thermal analyzer which monitored oxygen content in the flue gas at the inlet to the induced draft fan, except for Test 11. The continuous log read 7.7% and the spot check read 5.0% and an hour later 5.5%. The low reading could not be explained. All combustion factors, such as coal feed rate, inlet air flow, flue gas temperature, and condition of the fuel bed, were checked and seemed to be normal. The instrument zero was carefully checked and the instrument appeared to be functioning normally. Different oxygen content can be measured at different locations in a boiler of this type but these particular readings seem to be an anomaly.

No opacity evaluations were planned as part of this test. At this time of the year the water vapor from the scrubber condenses as the boiler gases exit the stack. It is difficult to evaluate such a plume.

The boiler and scrubber were operated in a normal manner, at a relatively steady state.

SECTION 4

LOCATION OF SAMPLING POINTS

Emissions to the atmosphere from Boiler No. 20 were measured in the smokestack. The coal fed into the boiler was sampled at the end of the two coal feed belts from the coal weighing devices that dump coal into the trip buckets that feed the spreaders.

STACK

Five 10-cm (4-in.) I.D. sampling ports were located on a 32-meter high (106-ft), 2.3-meter (90-in.) I.D. round smokestack, divided in half, with one half for the boiler being tested and the other half for Boiler No. 19 (see Figure 4). The sampling ports are 24 meters (79 ft) above the base of the stack (more than 10 diameters) and 8 meters (27 ft) below the mouth of the stack (more than 3 diameters). The site meets all criteria for an acceptable measurement site for particulate traverses under EPA Method 1 and Method 5 procedures, except for the unusual shape of the inside of the stack.

A 20-point traverse was done at this location, with four points being sampled along each radius of the stack leading to each of the five sample ports (see Figure 5).

COAL FEED SYSTEM

Coal was sampled through the access doors for the two coal feed belts leading to the boiler. Figure 6 shows a schematic diagram and a photograph of the coal sampling site.

1. PORT TO TOP OF STACK 27'
2. MONORAIL FITTING 71" FROM CENTER OF PORT TO TOP OF FITTING
3. CENTER OF PORT TO GRATING OF FLOOR 61"
4. RAILING TO OUTSIDE OF PORT 80"
5. NIPPLE ON PORTS 6-1/4" OUTSIDE, 4" INSIDE

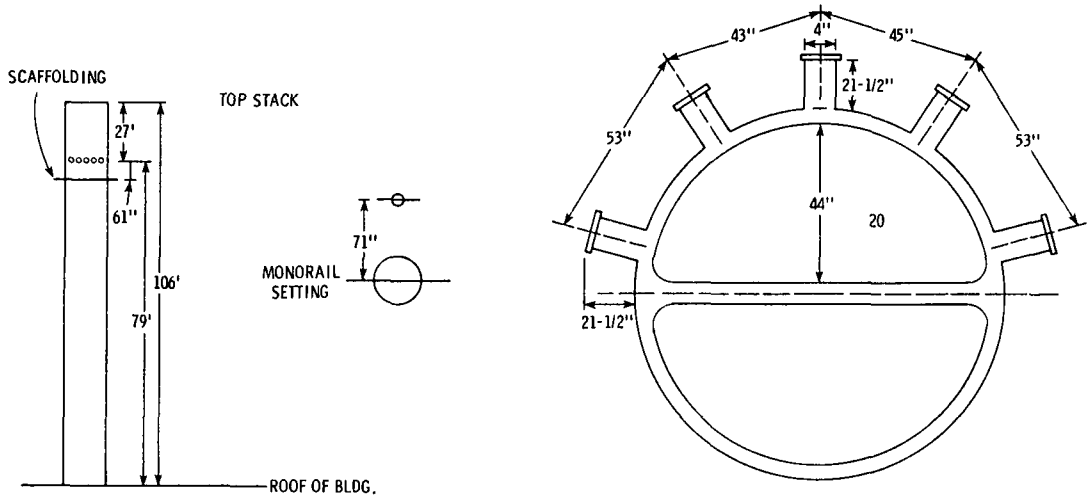

Figure 4. Stack sampling site at Caterpillar Tractor Co. Boiler No. 20 in East Peoria, Illinois.

TRAVERSE POINT No.	DISTANCE FROM INSIDE WALL
1	2.9"
2	9.5"
3	17.5"
4	29.1"

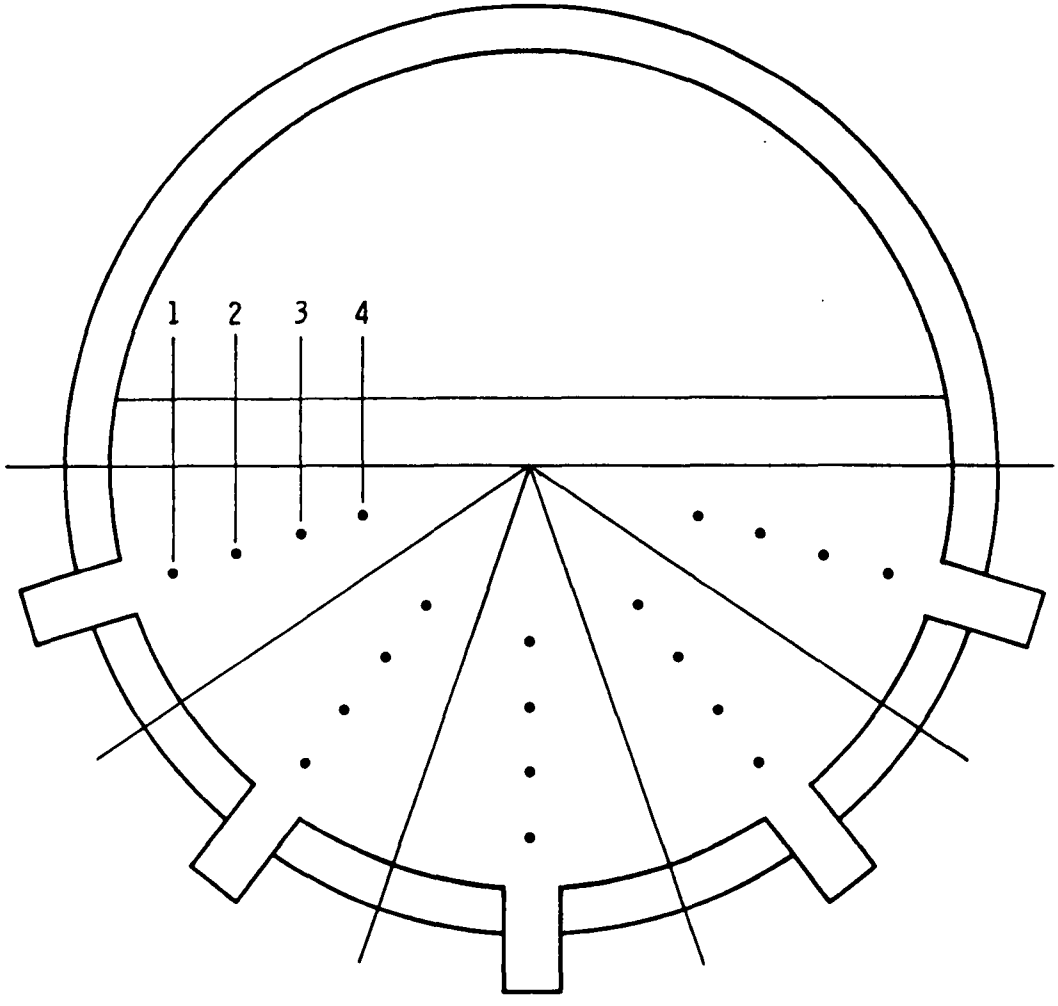

Figure 5. Traverse point locations at Caterpillar Tractor Co. Boiler No. 20 stack in East Peoria, Illinois.

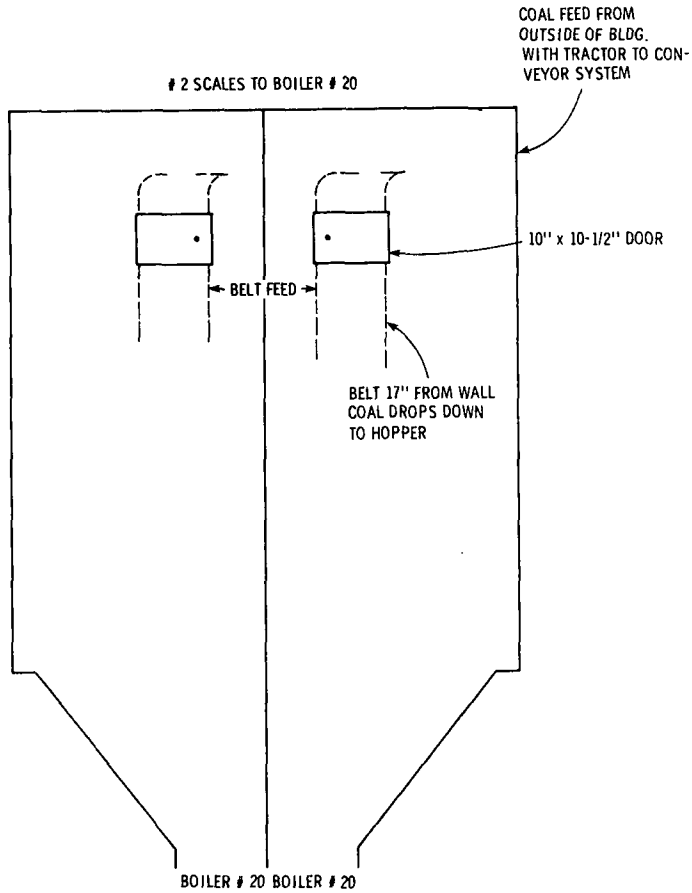

Figure 6. Coal sampling site at Caterpillar Tractor Co. Boiler No. 20 in East Peoria, Illinois.

SECTION 5

SAMPLING AND ANALYSIS PROCEDURES

SUMMARY

The sampling and analysis methods used at each site are shown in Table 1. Nine simultaneous runs of Methods 5 and 5B sampling were made at the stack downstream of all air pollution control equipment. A special dual-probe stack test system was used for sampling by Methods 5 and 5B through the same ports (with the nozzle centers 4.44 cm (1.75 in.) from each other. The flue gas velocity, temperature, flow rate, oxygen content, and carbon dioxide content were measured by EPA Methods 1-4 during all Method 5 and 5B stack sampling runs. Integrated Method 3 samples were taken from the exhaust of the Method 5B train.

The Method 5 and 5B filters and dried acetone probe washes were weighed (to a constant weight) prior to sulfuric acid and sulfate analyses. Sulfuric acid and sulfate concentrations were determined by techniques supplied to MRC by EPA on 10 October 1980. These techniques are described in this section and in Appendix D.

Grab samples of coal were taken for each stack test by sampling before, during, and after each emission test. The sulfur, ash, moisture, and heat content of the samples were analyzed by ASTM D 3176 and ASTM D 2015-66(72).

STACK SAMPLING

Heated glass-lined probes and Reeve Angel Type 934 AH filters were used for the Method 5 and 5B testing. The filter temperatures were monitored using thermocouples installed on the back half of the filter holders. A special dual-probe stack test system was used for stack testing by Methods 5 and 5B simultaneously through the same individual stack ports. Figure 7 is a schematic diagram of the dual-probe system. The nozzle centers of the Method 5 and 5B trains were 4.4 cm (1.75 in.) apart in this system. A single pitot tube between the Method 5 and 5B sampling probes was used to measure the flue velocity for both trains. Method 3 integrated bag samples were taken from the exhaust of the Method 5B train.

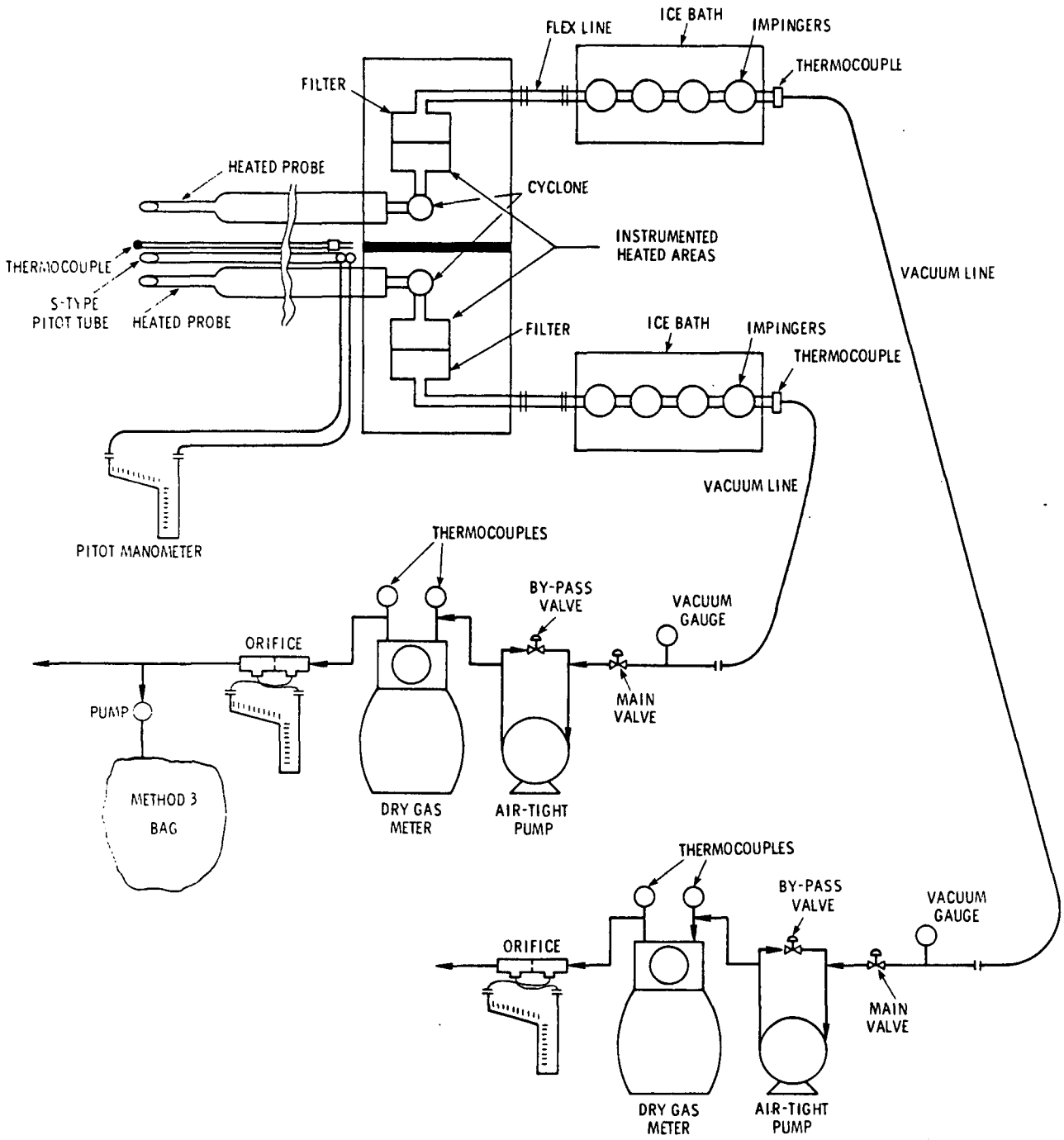

Figure 7. Dual-probe sampling train.

Method 5 and 5B sample volumes of at least 2.1 dry m^3 (73 ft^3) were taken. When Methods 5 and/or 5B were used, Methods 1-4 were also used, as in compliance monitoring.

STACK SAMPLE ANALYSES

EPA provided the general methods to be used for sulfuric acid and sulfate analysis on the Method 5 and 5B samples at a meeting on 10 October 1980. Gary McAlister clarified these procedures on 24 October 1980, and further refinement of the procedures occurred during the analysis of samples collected during previous emission testing under this work assignment. The procedures used are summarized in Appendix D.

The probe washes and filters were dried and weighed (using standard Method 5 procedures). The weighing was repeated until the weight of the particulates was within 10 mg of the weight on the previous weighing. Room temperature isopropanol was then added to each sample. The samples were soaked for at least 12 hours. Then the filter in isopropanol was ultrasonically extracted for 30 minutes. The extracts were filtered and analyzed for sulfuric acid using barium-thorin titration. This isopropanol extraction and analysis procedure was performed three times on every sample. Those portions of the extracts that were not titrated were bottled and retained.

After the sulfuric acid extraction with isopropanol, water was added to the filters and solid residues. After they soaked for at least 12 hours, they were ultrasonically extracted for 30 minutes. The extracts were filtered, passed through a Rexyn-101 ion exchange column, and analyzed for sulfates (using barium-thorin titration). The water extraction and sulfate analysis procedure was performed three times on every sample, and the untitrated water extracts were bottled and retained.

After all extractions, the filters and solid residues were dried and saved under nitrogen in a refrigerator, along with the untitrated extracts. These samples will be saved for no more than 6 months.

Blank filters and residue from the evaporation of clean acetone were analyzed when the stack samples were analyzed, along with standards and quality assurance audit samples of sulfate and sulfuric acid.

COAL SAMPLING

Aggregate coal samples, corresponding to the coal burned during each stack sampling run, were taken by grab sampling the coal falling off both coal feed belts before, during, and after every stack sampling run. The individual grab samples were taken by

traversing a coal sample container along the entire width of the coal feed belt. The timing of the samples corresponded to the timing of the stack sampling adjusted for the delay time between coal falling off the feed belt and coal entering the boiler. The three grab samples per stack sampling run were combined to make one aggregate sample per stack sample run. The samples were stored in labeled bottles.

COAL ANALYSIS

When the samples were returned for analysis, they were split in half using ASTM D 2013 riffle sampler protocol. Half of each sample was saved and the rest was analyzed. The halves analyzed were homogenized, split, and analyzed for sulfur, moisture, and ash using ASTM D 3176 ultimate analysis protocol. The heating value was determined using ASTM D 2015-66(72) bomb calorimetry.

SAMPLE HANDLING

Filters and impinger contents were transferred into clean, closed containers. Deposits on the inside of the sampling equipment were removed with acetone and distilled water. The acetone rinse was bottled. This occurred at the scaffolding at the stack or in the Company laboratory (inside the boiler house). The coal samples were stored in bottles until ready for analysis. Access to the samples was limited by storing them in a locked truck, except when being handled by authorized individuals. The samples were shipped in the truck to the MRC Dayton Laboratory for analysis. Records of the chain of custody of the samples were maintained.

DATA REDUCTION

MRC's computer and programmable calculators were used to reduce the analytical and field data to determine results. The "F" values used to determine ng/joule (lb/10^6 Btu) emissions were taken from the boiler emission regulations in 40 CFR 60.45(f)(4)(ii).

Appendix A contains copies of all raw field data sheets and coding sheets for data processing.

Appendix B contains complete computer printouts of the results of the sampling.

Appendix C (supplied by Radian Corp.) contains boiler monitoring data during the testing.

Appendix D contains the detailed analytical methods used.

Appendix E contains sample analysis data and a summary of the results of the quality control and assurance procedures.

Appendix F identifies the people performing the sampling, analysis, and data reduction.

QUALITY ASSURANCE

The quality assurance and control program included all applicable procedures specified in the Federal Register for EPA Methods 1-5 and the procedures specified in the EPA Guidelines for the Development of Quality Assurance Programs for these methods.

In addition, during one run simultaneous Method 3 samples were taken from the exhaust of both the Method 5 train and the Method 5B train, and the result indicated the precision of the Method 3 sampling and analysis, such that for future sampling only one Method 3 sample was taken at the exhaust of the Method 5B train.

Standard ASTM procedures were used for the coal analysis. Bowser-Morner Testing Laboratories, Inc., the coal analysis subcontractor, participates in EPA's new quality assurance program for coal sulfur, ash, and moisture content. This program involves the analysis of samples provided by EPA.

The accuracy of the data used in computerized data processing was checked by comparing the printout of the data used to calculate results with the raw field data used to code the computer input.