United States
Environmental Protection
Agency

Office of Air Quality
Planning and Standards
Research Triangle Park NC 27711

EMB Report 83-CAT-11
August 1983

Air

EPA

Petroleum Refineries - Fluid Catalytic Cracking Regenerators

Particulate Test Method Evaluation

Emission Test Report
Phillips Petroleum Company
Sweeny, Texas

UNITED STATES ENVIRONMENTAL PROTECTION AGENCY
Office of Air Quality Planning and Standards
Research Triangle Park, North Carolina 27711

April 18, 1984

MEMORANDUM

SUBJECT: Source Test Report

FROM: J.E. McCarley, Chief, Field Testing Section,
Emission Measurement Branch, ESED (MD-13)

TO: See Below

The enclosed final source test report is submitted for your information. Any questions regarding the test should be directed to the Project Officer (telephone: 8/629-5543). Additional copies of this report are available from the ERC Library, Research Triangle Park, North Carolina 27711.

Industry: Petroleum Refineries--Fluid Catalytic Cracking Regenerators

Process: Particulate Test Method Evaluation

Company: Phillips Petroleum Company

Location: Sweeny, Texas

Project Report Number: 83-CAT-11

Project Officer: George W. Walsh

Enclosure

Addressees:
Ken Knapp, ESRL (MD-46)
Arch MacQueen, MDAD (MD-14)
Rodney Midgett, EMSL (MD-77)
Mark S. Siegler, DSSE (MD-EN-341)
Director, Air and Waste Management Division, Region VI
(copy enclosed for State agency)
Ann Ingram, EPA Library Services (MD-35)

EMISSION TEST REPORT

METHOD DEVELOPMENT AND TESTING FOR FCCU REGENERATORS
Phillips Petroleum Company
Sweeny, Texas

EMB Report No. 82-CAT-11
ESED Project No. 82/04

by

PEDCo Environmental, Inc.
11499 Chester Road
P.O. Box 46100
Cincinnati, Ohio 45246-0100

Contract No. 68-02-3546
Work Assignment Nos. 14 and 20
PN: 3530-14 and 3530-20

EPA Task Manager

Mr. Winton Kelly
Emission Standards and Engineering Division
Emission Measurement Branch

U.S. ENVIRONMENTAL PROTECTION AGENCY
RESEARCH TRIANGLE PARK, NORTH CAROLINA 27711

March 1984

DISCLAIMER

This report was furnished to the U.S. Environmental Protection Agency, Emission Measurement Branch, by PEDCo Environmental, Inc., Cincinnati, Ohio, in fulfillment of Contract No. 68-02-3546, Work Assignments 14 and 20. Its contents are reproduced herein as received from PEDCo Environmental, Inc. The opinions, findings, and conclusions expressed are those of the author and not necessarily those of the Environmental Protection Agency. Mention of company or product names does not constitute endorsement or recommendation for use.

CONTENTS

	Page
Figures	iv
Tables	v
Acknowledgment	vii
Quality Assurance Element Finder	viii
1. Introduction	1-1
2. Process Operation	2-1
3. Sampling Location and Test and Analytical Methods Used	3-1
Sampling location	3-1
Sampling methods	3-4
Sample analysis	3-8
4. Summary and Discussion of Test Results	4-1
Sample data	4-1
Thermogravimetric analytical results	4-4
Water-soluble sulfate analytical data	4-24
Recommendations for sample and analytical methodology	4-35
5. Quality Assurance	5-1
References	R-1
Appendix A Computer printouts and example calculations	A-1
Appendix B Raw field data	B-1
Appendix C Raw laboratory data	C-1
Appendix D Sampling and analytical procedures	D-1
Appendix E Calibration procedures and results	E-1
Appendix F Quality assurance summary	F-1
Appendix G Project participants and sample log	G-1

FIGURES

Number		Page
3-1	Sample Site Schematic	3-2
3-2	FCCU Sampling Site	3-3
4-1	Average Particulate Concentration in Run 9 at Indicated Sample Heat-Conditioning Temperature	4-14
4-2	Average Particulate Concentration in Runs 2, 4, 6, and 10 at Indicated Conditioning Temperature	4-15
5-1	Audit Report Dry Gas Meter (Meter Box FB-2)	5-4
5-2	Audit Report Dry Gas Meter (Meter Box FB-3)	5-5
5-3	Audit Report Dry Gas Meter (Meter Box FB-5)	5-6
5-4	Audit Report Dry Gas Meter (Meter Box FB-7)	5-7
5-5	Thermocouple Digital Indicator Audit Data Sheet (Indicator 124)	5-8
5-6	Thermocouple Digital Indicator Audit Data Sheet (Indicator 125)	5-9

TABLES

Number		Page
3-1	Sampling Matrix	3-5
3-2	Analytical Matrix	3-10
4-1	Summary of Sample Conditions	4-2
4-2	Summary of Thermogravimetric Analytical Results	4-5
4-3	Within-Run Comparisons on a Total Weight Basis	4-7
4-4	Comparison of Weight Losses Above 160°C for 6- and 24-Hour Heat-Conditioning Time Periods	4-8
4-5	Comparison of Filterable Particulate Concentrations After Conditioning at Temperature 160°, 232°, and 315°C	4-10
4-6	Filterable Particulate Relative Percent Weight Loss After Conditioning at Temperatures 160°, 232°, and 315°C	4-12
4-7	Summary of H_2SO_4 and SO_2 Analytical Data	4-16
4-8	Statistical Data for Grouped Runs After Conditioning at Indicated Temperatures	4-21
4-9	Summary of Precision Estimates After Conditioning at Indicated Temperatures	4-22
4-10	Summary of Water-Soluble Sulfate Analytical Results	4-25
4-11	Summary of Results for Residual Sulfate on Within-In Run Samples Conditioned at 315°C	4-27
4-12	Comparison of Within-In Run Particulate Concentrations After Correction for Residual Sulfate to the M5W Test Results	4-29

TABLES (continued)

Number		Page
4-13	Summary of Results for Residual Sulfate on Samples Conditioned at 315°C	4-30
4-14	Cations Found in Water Extraction by ICP	4-32
4-15	Soluble Sulfate Present in Sample Analyzed by ICP	4-33
4-16	Charge Balance Results for Samples Analyzed by ICP	4-34
5-1	Field Equipment Calibration	5-3
5-2	Example of a Thermogravimetric Analysis of Filter and Acetone Blanks	5-10
5-3	Audit Report SO_2 Analysis	5-12
5-4	Reagent Blank Analysis for IPA and H_2O_2	5-12
5-5	Blank Analytical Data for Non-Water-Soluble Sulfate Analyses	5-12
5-6	Blank Analysis Data for the Ion Chromatography Analyses	5-12

ACKNOWLEDGMENT

Mr. Winton Kelly, EPA Task Manager, provided overall project coordination and guidance and observed the test program. Mr. K. C. Hustvedt, EPA Lead Engineer - Chemical and Petroleum Branch, provided project coordination relative to process operation. Mr. Lynn Sturrock represented Phillips Petroleum Products Company and provided assistance in scheduling and process operation. Mr. Charles Bruffey was the PEDCo Project Manager. Principal authors were Messrs. Charles Bruffey and Thomas Wagner.

QUALITY ASSURANCE ELEMENT FINDER

	Location Section	Page
Title page	-	-
Table of contents	-	ii
Project description	1	1-1
QA objective for measurement of data in terms of precision, accuracy, completeness, representativeness, and comparability	Appendix F	F-2
Sampling procedures	Appendix D	D-1
Sample custody	Appendix C	C-1
Calibration procedures and frequency	Appendix E	E-1
Analytical procedures	Appendix D	D-1
Data reduction, validation, and reporting	Section 5 Appendix F	5-1 F-2
Internal quality control checks and frequency	Section 5 Appendix F	5-1 F-11
Performance and system audits and frequency	Section 5 Appendix F	5-1 F-3
Preventive maintenance procedures and schedules	Appendix F	F-12
Specific routine procedures used to assess data precision, accuracy, and completeness of specific measurement parameters involved	Appendix F	F-4
Corrective action	Appendix F	F-11
Quality assurance reports to management	Appendix F	F-12

SECTION 1

INTRODUCTION

On March 8, 1974, the U.S. Environmental Protection Agency (EPA) promulgated a New Source Performance Standard (NSPS) for particulate emissions from fluid catalytic cracking unit (FCCU) regenerators. The testing procedures in this standard specified Method 5 for measurement of these emissions, and this method was used to collect the data to support the NSPS in 1971 and 1972. The facilities tested were conventional regenerators equipped with electrostatic precipitators and carbon monoxide (CO) boilers.

Since promulgation of the NSPS, the EPA has received several requests for clarification of the intent of the emission regulation. In response, the EPA has stated that the intent was to control "catalyst fines" or "mineral dust," not the condensible sulfates that are in the gas phase at the operating temperature of the control device.

In the public notice of proposed rulemaking for a revision to the FCCU new source standard,* the EPA stated that because Method 5 is capable of collecting condensible matter that is not controllable by the best emission-reduction systems, a facility

*44 FR 60759, Monday, October 22, 1979.

using these control systems could be found in noncompliance if significant quantities of such condensibles were present as a result of feed changes or process variations. Consequently, EPA is evaluating sampling and analytical parameters designed to minimize the collection of condensible sulfate materials from these sources.

As part of a study performed under contract to the Emission Measurement Branch of the EPA, PEDCo Environmental, Inc., conducted the second in a series of three atmospheric emission test projects from November 9 through 14, 1982, at the Phillips Petroleum Company refinery in Sweeny, Texas. Testing was performed at the final exit stack of the FCCU regenerator. The purpose of the study was either 1) to develop a modification to EPA Reference Method 5, or 2) to develop a new method to minimize the collection of condensible sulfate materials in the measurement of particulate emissions from these sources.

All samples were collected by use of four single sample trains at essentially a single point near the center of the FCCU exit stack. A total of 10 test runs were made during the test series. So that the effect of sample temperature on sulfate collection could be evaluated, probe and filter box temperatures were varied for each run as follows:

Sample designation	Probe and filter box sample temperature
M5	121°C (250°F)
M5B	160°C (320°F)
M5-450	232°C (450°F)
M5W	121°C (250°F)

Paired trains were run at similar temperatures to allow within-run data comparisons as well as comparisons between methods run at different sample temperatures.

Probe rinse and filter sample fractions were subjected to a thermogravimetric analysis at predetermined temperatures to assess sample weight loss as a function of drying temperature. In addition, several samples (designated M5W) collected at 121°C (250°F) were analyzed for determination of total water-soluble sulfate and subsequent particulate mass according to modified procedures developed by the Texas Air Control Board.* This method incorporates deionized water as the sample recovery solvent, a series of gravimetric analyses, and an independent measurement of water-soluble sulfates for subsequent derivation of the mass of non-water-soluble particulate (matter that does not contain any water-soluble sulfate). Water-soluble sulfate was measured by ion chromatography. Select sample fractions also were analyzed for cation species to characterize the water-soluble sulfate other than sulfuric acid in the samples.

Each individual sample train was followed by a modified EPA Method 8** impinger section to allow analysis of sulfates as sulfuric acid (H_2SO_4) and sulfur dioxide (SO_2). Flue gas temperature, moisture content, and composition [oxygen (O_2), carbon

---

*Texas Air Control Board - Laboratory Division. Determination of Particulate in Stack Gases Containing Sulfur Dioxide. December 1979.

**40 CFR 60, Appendix A, Reference Method 8, July 1983.

dioxide (CO_2), and carbon monoxide (CO)] were measured in conjunction with the emission tests.

Messrs. Winton Kelly and K. C. Hustvedt of the EPA observed part of the test program and provided overall project coordination and guidance.

SECTION 2

PROCESS OPERATION

PEDCo conducted this methods development project on FCC Unit HOC No. 27.1 at Phillips Sweeny refinery. This unit represents a potential new type of FCC unit for processing heavy oil. The high-temperature regenerator burns the coke on the catalyst to CO_2. Particulate emissions are controlled by a Buell electrostatic precipitator (ESP). For reasons of confidentiality, this report does not include a detailed description of Phillips' process operation.

SECTION 3

SAMPLING LOCATION, TEST, AND ANALYTICAL METHODS USED

Four sample trains were used to collect all the samples at essentially a single point near the center of the FCCU final exit stack.

Figure 3-1 presents a schematic of the sample site setup utilized during this study. By allowing four trains to sample simultaneously at essentially the same point in the stack, this sampling approach reduces the effect of spatial and temporal variations in the velocity and particulate profiles on the sampling results. It also permits a statistically significant number of samples to be taken in a short time. Further, because two of the four trains are identical for every run, the within-train precision can be determined while the relationship of the different trains is being compared.

This four-train sampling system was used to perform a total of 10 runs and produced a total of 40 individual samples.

3.1 SAMPLING LOCATION

Testing took place at the FCCU final exit stack, as depicted in Figure 3-2. Four 10.16-cm (4-in.) i.d. sampling ports were available at 90 degrees off-center. As shown in Figure 3-1, all

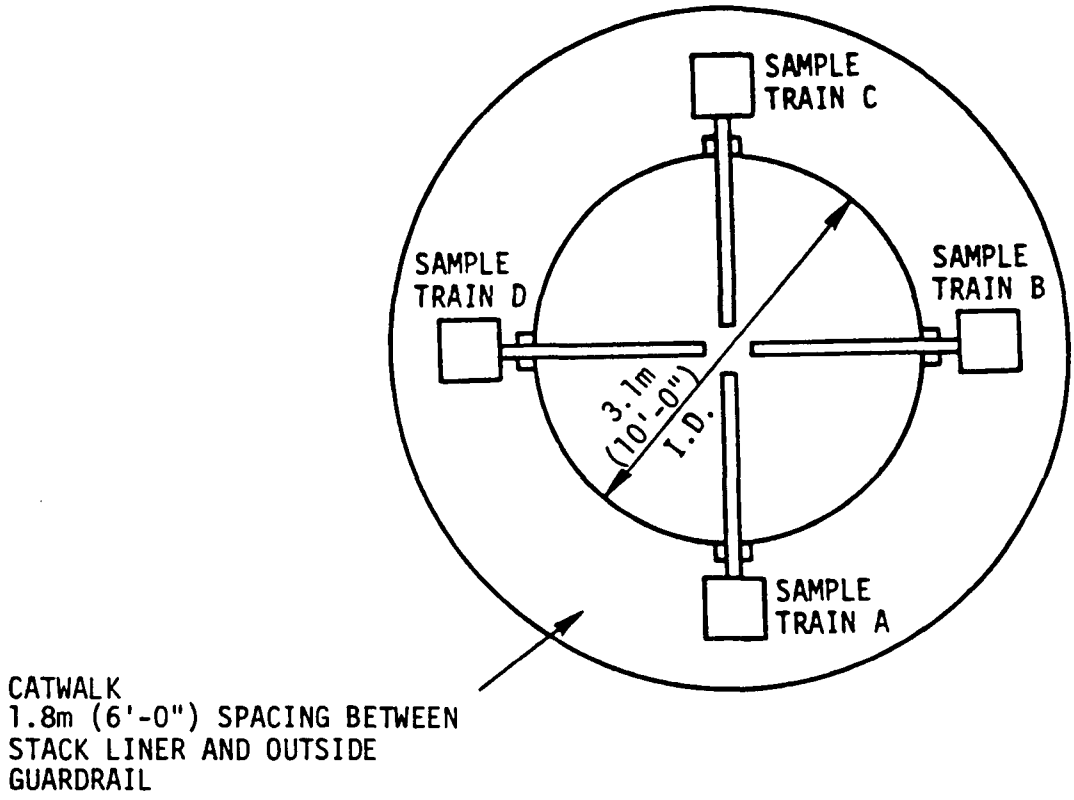

Figure 3-1. Sample site schematic.

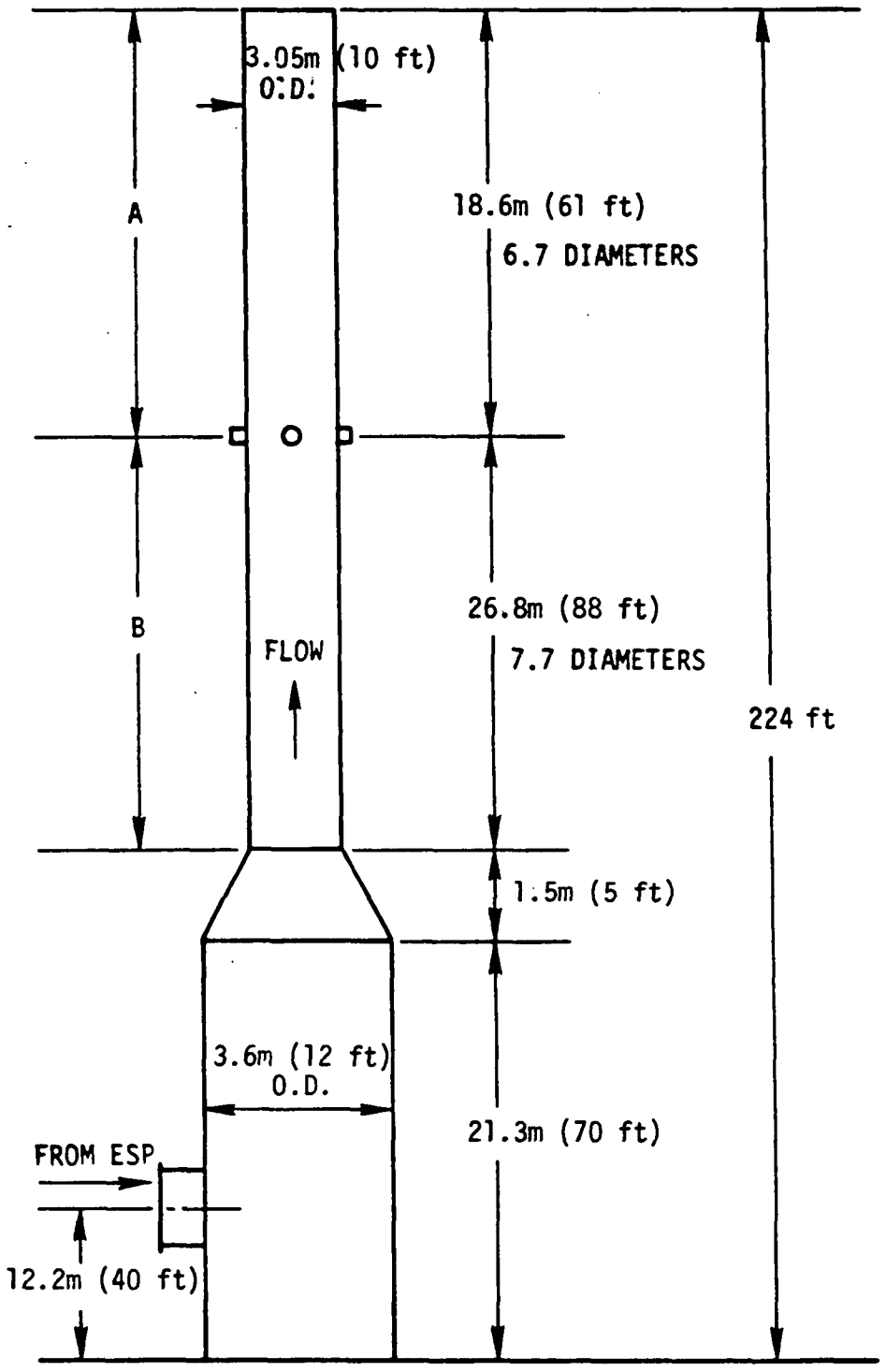

Figure 3-2. FCCU sampling site.

four sampling ports were used in this study. The sampling platform was approximately 48.8 m (160 ft) above grade.

3.2 SAMPLING METHODS

The four trains collected flue gas samples simultaneously from four single points in the stack. Each point represented similar velocity pressures and temperature as determined from a velocity and temperature profile performed according to procedures described in EPA Methods 1 and 2.* The desired sampling time was 120 minutes, and readings of stack flue gas and sampling train data were recorded at 10-minute intervals for each train. A pitot tube and thermocouple located in each pair of trains were used to set the isokinetic sampling rates, which were determined by programmable calculators.

Table 3-1 presents the sampling matrix for this test series. Brief descriptions of the particular conditions for each train are as follows:

- Method 5 - Designation M5

  Filterable particulate was collected by use of a probe and filter assembly heated to 121°C (250°F). Acetone was used to rinse all sampling train components prior to the filter.

- Method 5B - Designation M5B

  Filterable particulate was collected by use of a probe and filter assembly heated to 160°C (320°F). Acetone was used to rinse all sampling train components prior to the filter.

---

*40 CFR 60, Appendix A, Reference Methods 1 and 2, July 1983.

TABLE 3-1. SAMPLING MATRIX

Run No.	Sampling Train No.	Sampling method[a]			
		M5 121°C (250°F)	M5B 160°C (320°F)	M5-450 232°C (450°F)	M5W 121°C (250°F)
1	1A	X			
	1B	X			
	1C				X
	1D				X
2	2A			X	
	2B			X	
	2C		X		
	2D		X		
3	3A				X
	3B				X
	3C	X			
	3D	X			
4	4A			X	
	4B			X	
	4C		X		
	4D		X		
5	5A	X			
	5B	X			
	5C				X
	5D				X
6	6A			X	
	6B			X	
	6C		X		
	6D		X		

(continued)

TABLE 3-1 (continued)

Run No.	Sampling Train No.	Sampling method[a]			
		M5 121°C (250°F)	M5B 160°C (320°F)	M5-450 232°C (450°F)	M5W 121°C (250°F)
7	7A		X		
	7B		X		
	7C				X
	7D				X
8	8A			X	
	8B			X	
	8C				X
	8D				X
9	9A	X			
	9B	X			
	9C		X		
	9D		X		
10	10A			X	
	10B			X	
	10C		X		
	10D		X		

[a]M5 (Method 5) - Probe and filter heated to 121°C (250°F).
M5B (Method 5B) - Probe and filter heated to 160°C (320°F).
M5-450 (Method 5-450) - Probe and filter heated to 232°C (450°F).
M5W (Method 5) - Probe and filter heated to 121°C (250°F); water rinse of nozzle, probe, and front filter holder glassware.

- Method 5-450 - Designation M5-450

  Filterable particulate was collected by use of a probe and filter assembly heated to 232°C (450°F). Acetone was used to rinse all sampling train components prior to the filter.

- Method 5W - Designation M5W

  Filterable particulate was collected by use of a probe and filter assembly heated to 121°C (250°F). Deionized distilled water was used to rinse all sampling train components prior to the filter.

For each train, the probe and filter temperatures were set at the predetermined temperature and monitored throughout each test by the use of multiterminal digital indicators with the thermocouples located in each probe and immediately behind the Method 5 filter frits.

The Method 8 back half of each sampling train had four impingers. An unheated Method 5 filter assembly was inserted between the first and second impingers to preclude any sulfuric acid mist carryover. The contents of each impinger were as follows:

Impinger	Contents - all runs
1	200 ml 80% IPA
2	100 ml 10% H_2O_2
3	100 ml 10% H_2O_2
4	400 g silica gel

All the filters were Whatman Reeve Angel 934AH. The filters used in the Method 5 position were heated to 300°C prior to their identification and tare weighing.

The flue gas moisture content of each individual sampling train was determined gravimetrically by weighing each impinger

before and after every test. In addition, a flue gas grab sample collected during each test was analyzed for oxygen, carbon dioxide, and carbon monoxide by use of an Orsat analyzer to facilitate calculation of the stack gas molecular weight.

3.3 SAMPLE ANALYSIS

Table 3-2 presents a matrix of the analytical plan followed during this test program.

Particulate Analysis

Initially, the filter particulate catch was placed in a tared glass weighing dish, desiccated for 24 hours, and then weighed until a constant weight was achieved.* The acetone probe rinse fraction was transferred to a tared beaker, evaporated to dryness at ambient temperature and pressure, desiccated for 24 hours, and then weighed to a constant weight.*

After this initial analysis, the probe rinse and filter fractions were heat-conditioned in an oven for 6 hours (except where noted) according to the treatment sequence presented in Table 3-2. When removed from the oven, each sample fraction was cooled and desiccated for 24 hours and then weighed to a constant weight.** Filter and acetone blanks were treated in a similar manner as actual samples.

---

*Previous data show that samples collected at 120°C will not come to a constant weight. At least three separate weighings were obtained, and the lowest weight achieved was reported as the ambient weight.

**Criteria as specified in 40 CFR 60, Appendix A, EPA Reference Method 5, July 1983.

Water-Soluble Sulfate Analysis

This method is designed to determine the particulate catch corrected for any water-soluble sulfate retained in the Method 5 sample fractions. As documented in previous studies, the condensible sulfate problem can be attributed to sulfuric acid, which makes a direct gravimetric analysis difficult for two reasons. First, sulfuric acid is a powerful desiccating agent itself; therefore, if a significant amount of sulfuric acid is present, the Method 5 criteria for determining constant weight of the particulate cannot be met. Second, the number of water molecules associated with each sulfuric acid molecule is not consistent. The water-soluble sulfate method developed by the Texas Air Board was designed to overcome these problems. This method converts any sulfuric acid present to suitable form for accurate gravimetric analysis. Ammonium hydroxide is added to form ammonium sulfate in the aqueous solutions. Ammonium hydroxide is used because any excess reagent will evaporate. This procedure enables the following determinations: the gross particulate (sulfate as ammonium sulfate plus other particulate); the sulfate as ammonium sulfate from the Method 6 titration or ion chromatography; and subsequently, the non-water-soluble sulfate particulate by subtraction of the sulfate (as ammonium sulfate) from the gross particulate.

Each sample fraction, including blanks, was handled and analyzed as follows:

Filter - The filter was cut into small pieces and placed in a 125-ml Erlenmeyer flask with a standard taper joint

TABLE 3-2. ANALYTICAL MATRIX

Run No.	Sampling Train No.	Sampling method	Thermogravimetric analysis[a]			Water-soluble sulfate determination[b]	Cations by ICP[c]
			Ambient → 160° → 232° → 316°C	Ambient → 232° → 316°C	Ambient → 316°C		
1	1A	M5	X				X
	1B	M5	X				X
	1C	M5W				X	X
	1D	M5W				X	X
2	2A	M5B	X				
	2B	M5B	X				
	2C	M5-450	X				
	2D	M5-450	X				
3	3A	M5W				X	
	3B	M5W				X	
	3C	M5		X			
	3D	M5		X			
4	4A	M5-450			X		
	4B	M5-450			X		
	4C	M5B			X		
	4D	M5B			X		
5	5A	M5	X (24)				
	5B	M5	X				
	5C	M5W				X	
	5D	M5W				X	
6	6A	M5B			X		
	6B	M5B			X		
	6C	M5-450			X		
	6D	M5-450			X		

(continued)

TABLE 3-2 (continued)

Run No.	Sampling Train No.	Sampling method	Thermogravimetric analysis[a]			Water-soluble sulfate determination[b]	Cations by ICP[c]
			Ambient → 160° → 232° → 316°C	Ambient → 232° → 316°C	Ambient → 316°C		
7	7A	M5B	X				X
	7B	M5B	X (24)				X
	7C	M5W				X	X
	7D	M5W				X	X
8	8A	M5-450		X			
	8B	M5-450			X		
	8C	M5W				X	X
	8D	M5W				X	X
9	9A	M5			X		
	9B	M5			X		
	9C	M5B	X (24)				
	9D	M5B	X				
10	10A	M5B		X			
	10B	M5B			X		
	10C	M5-450	X (24)				
	10D	M5-450	X				

[a]Thermogravimetric conditioning of probe rinse and filter fractions at indicated temperatures after initial desiccation and ambient weights were obtained. The designation (24) for select samples indicates a heat period of 24 hours. All other samples were heat-conditioned for 6 hours.

[b]In this procedure, the mass of total water-soluble sulfates in the sample was determined and subtracted from the total sample mass.

[c]These samples were analyzed for cations by ICP analytical techniques.

Note: All back halves represent a modified Method 8, with analysis for sulfates as sulfuric acid and sulfur dioxide.

equipped with an air condenser. The shipping container was rinsed into the flask. About 50 ml of distilled water was added and gently refluxed for 6 to 8 hours. The solution was then cooled and diluted with water to exactly 250 ml in a volumetric flask. This was reserved for total soluble sulfate analysis, which is described in the following subsection.

Probe Rinse - The probe wash was poured into a 250-ml volumetric flask. The sample bottle was rinsed with distilled water, and the rinsings were added to the flask. The solution was then diluted to the mark with distilled water. This solution was reserved for total soluble sulfate analysis, which is described in the following subsection.

Total Soluble Sulfate Analysis--

A 15-ml aliquot was drawn from the settled samples (filter and rinse) into separate sample containers with a clean, dry pipet [making sure only solution (no solids) was transferred; if necessary, a portion of the sample was centrifuged].* The sulfate ion ($SO_4^=$) concentration in each aliquot was determined by ion chromatography (IC). A syringe was used to inject 1 ml of the aliquot into a 100-µl sample loop. The conductivity response of the sample was compared with the calibration curve to obtain the $SO_4^=$ concentration in milliliters per liter. Dilutions were prepared and reanalyzed if the initial response was out of the linear calibration range (i.e., greater than 15 mg/liter). Blank filter and water samples were prepared and analyzed in the same manner as the actual samples.

---

*The pipet is not rinsed. This is a deviation from normal procedures, but is necessary because the volume removed from the volumetric flask is required in the calculations.

Mass Determination--

Mass determination was made in the following manner.

Filter and Rinse Solution Preparation - The remaining contents of each volumetric flask (235 ml) were poured into separate tared 250-ml beakers, and the flask was rinsed with distilled water to transfer all particulate matter. The filter solution was in Beaker A, and the rinse solution was in Beaker B. These solutions were evaporated to approximately 100 ml at 105°C and allowed to cool before the next analysis was made.

Filter and Rinse Solution Analysis - Five drops of phenolphthalein indicator were added to all the tared beakers. Concentrated NH_4OH was then added drop by drop until the solution turned pink. The samples were returned to the oven and evaporated to dryness at 105°C, cooled in a desiccator, and weighed to a constant weight. Results were reported to the nearest 0.1 mg. For this method, "constant weight" means a difference of no more than 0.5 mg or 1 percent of the total weight less beaker and/or filter tare, whichever is greater, between two consecutive weighings, with no less than 6 hours of desiccation time between weighings.

Calculations--

Nomenclature--

FP = weight of particulate on the filter in Beaker A*, mg

PRP = weight of probe rinse particulate in Beaker B*, mg

NWSSP = weight of non-water-soluble sulfate particulate**, mg

AS_f = weight of ammonium sulfate in filter sample, mg

AS_{pr} = weight of ammonium sulfate in probe rinse sample, mg

V_{evap} = volume of solution evaporated in Beaker A (filter) or Beaker B (probe rinse), ml

C_{SO_4} = concentration of sulfate in filter or probe rinse solution aliquots, mg/liter

---

*Particulate with H_2SO_4 converted to $(NH_4)_2SO_4$.

**Particulate excluding water-soluble sulfates.

Equations--

$$FP(mg) = \text{gross weight Beaker A} - \text{tare weight Beaker A} - \text{filter tare weight} \qquad \text{Eq. 1}$$

$$PRP(mg) = \text{gross weight Beaker B} - \text{tare weight Beaker B} \qquad \text{Eq. 2}$$

$$AS(mg) = C_{SO_4}\ (mg/liter) \times V_{evap}\ (ml) \times \frac{liter}{1000\ ml} \times 1.376\ \left(\frac{mg\ AS}{mg\ SO_4}\right) \qquad \text{Eq. 3}$$

Mass of Non-Water-Soluble Sulfate Particulate

The sum of the particulate* collected on the filter (FP) and the particulate* collected in the probe rinse (PRP) is equal to the sum of the non-water-soluble sulfate particulate (NWSSP) and ammonium sulfate (AS) in both samples:

$$FP + PRP = NWSSP + AS_f + AS_{pr} \qquad \text{Eq. 4}$$

The NWSSP can be found by rearranging the equation and substituting appropriate values determined by Equations 1, 2, and 3.

$$NWSSP = FP + PRP - AS_f - AS_{pr} \qquad \text{Eq. 5}$$

Sulfate (as Sulfuric Acid Mist) Analysis

The volume of the sample solution was recorded and the pH of the sample determined. If the pH was greater than 3, no ion exchange column was used. The sample volume was diluted to 500 ml with 80 percent IPA. A 100 ml aliquot of this solution was

*Particulate with H_2SO_4 converted to $(NH_4)_2SO_4$.

pipetted into a 250 ml Erlenmeyer flask with 2 to 3 drops of thorin indicator and titrated to a pink end point using 0.0100 N barium perchlorate. A blank was titrated for each sample in the same manner.

Several samples required the use of an ion exchange column to remove divalent cations (Cd^{++}, Ca^{++}, Fe^{++}, Zn^{++}). A small ion exchange column approximately 2.4 cm (1 in.) in depth and 1.9 cm (3/4 in.) in diameter was prepared using a strong cation resin. Twenty mls of sample was percolated through the column and collected in a volumetric flask. The column was then rinsed with 20 mls of deionized, distilled water. The 40 ml solution (sample and rinse) was then added to 160 ml of 100 percent IPA and titrated per Method 6.

Sulfur Dioxide Analysis

The hydrogen peroxide sample solution was diluted to 500 ml with deionized distilled water. A 20-ml aliquot of this solution was pipetted into a 250-ml Erlenmeyer flask with 80 ml of 100 percent IPA and 2 to 3 drops thorin indicator. The solution was then titrated to a pink end point with 0.0100 N barium perchlorate. Blanks were titrated in a similar manner.

Sulfate Analysis by Ion Chromatography

Selected samples, as designated in Table 3-2, were analyzed for total sulfates as SO_4 by standard ion chromatography (IC) analytical techniques. In addition, within-run samples, heat-conditioned to 315°C, were extracted with distilled water as

described in Method M5W, and IC was used to analyze aliquots for total residual sulfates for comparative purposes.

Cation Analysis by Inductively Coupled Plasma (ICP)

The extracts of selected filter and rinse particulate (see Table 3-2) were analyzed for cations. Metallic ions and a cross-check on sulfur were determined by ICP.

SECTION 4

SUMMARY AND DISCUSSION OF TEST RESULTS

The results of the field sampling program are summarized in this section to allow both within-run and between-run data comparisons to be made, especially between the thermogravimetric and water-soluble sulfate test results. Appendix A contains computer printouts and example calculations. Appendices B and C contain the raw field and laboratory data sheets, respectively. Appendix D presents details of the sampling and analytical procedures used, and Appendix E addresses equipment calibration guidelines and results.

4.1 SAMPLE DATA

Table 4-1 summarizes pertinent sample data. The actual probe and filter temperatures, stack temperature, and moisture content represent average values for each individual sample train. The isokinetic criteria defined in Reference Method 5* were met in each case except Sample Run 2B, which had an excessive post-test leak rate. As noted in Section 3, the desired sample time was 120 minutes. Tests 5 and 7 were run for 90 minutes and Test 10 was run for 100 minutes.

---

*40 CFR 60, Appendix A, Reference Method 5, July 1, 1983.

TABLE 4-1. SUMMARY OF SAMPLE CONDITIONS

Test No.	Date (1982) and time (24-h)	Train ID	Sample[a] type	Sample temperature, °C (°F)				Metered volume,[b] dNm³ (dscf)	Average stack temperature, °C (°F)	Average moisture content,[c] %
				Probe		Filter				
				Desired	Actual	Desired	Actual			
1	11/9 11:57-13:57	1A	M5	121 (250)	213 (416)	121 (250)	124 (256)	2.94 (103.81)	213 (416)	12.1
		1B	M5	121 (250)	208 (406)	121 (250)	123 (254)	3.05 (107.55)		
		1C	M5W	121 (250)	212 (413)	121 (250)	119 (246)	3.24 (114.43)		
		1D	M5W	121 (250)	211 (411)	121 (250)	125 (257)	3.19 (112.76)		
2	11/10 10:29-12:29	2A	M5-450	232 (450)	234 (453)	232 (450)	229 (444)	2.81 (99.12)	216 (421)	11.7
		2B	M5-450	232 (450)	246 (476)	232 (450)	227 (441)	2.62 (92.64)		
		2C	M5B	160 (320)	162 (324)	160 (320)	164 (327)	3.28 (115.96)		
		2D	M5B	160 (320)	165 (328)	160 (320)	164 (327)	3.25 (114.85)		
3	11/10 14:00-16:00	3A	M5W	121 (250)	124 (255)	121 (250)	122 (252)	2.86 (101.09)	214 (418)	12.3[d]
		3B	M5W	121 (250)	124 (256)	121 (250)	123 (253)	3.00 (105.91)		
		3C	M5	121 (250)	121 (250)	121 (250)	122 (251)	3.29 (116.04)		
		3D	M5	121 (250)	122 (252)	121 (250)	126 (259)	3.25 (114.85)		
4	11/11 11:32-13:32	4A	M5-450	232 (450)	246 (476)	232 (450)	186 (367)	2.88 (101.71)	215 (419)	11.4
		4B	M5-450	232 (450)	252 (486)	232 (450)	163 (326)	3.15 (111.22)		
		4C	M5B	160 (320)	164 (328)	160 (320)	163 (325)	3.40 (120.09)		
		4D	M5B	160 (320)	161 (321)	160 (320)	158 (316)	3.29 (116.26)		
5	11/11 15:33-17:03	5A	M5	121 (250)	120 (248)	121 (250)	119 (247)	2.14 (75.58)	212 (414)	13.7
		5B	M5	121 (250)	123 (254)	121 (250)	119 (246)	2.24 (79.22)		
		5C	M5W	121 (250)	123 (253)	121 (250)	124 (255)	2.48 (87.66)		
		5D	M5W	121 (250)	126 (258)	121 (250)	126 (258)	2.47 (87.15)		
6	11/12 11:07-13:40	6A	M5-450	232 (450)	244 (472)	232 (450)	205 (400)	2.84 (100.21)	215 (419)	9.4
		6B	M5-450	232 (450)	254 (489)	232 (450)	211 (412)	3.02 (106.60)		
		6C	M5B	160 (320)	164 (327)	160 (320)	164 (327)	3.35 (118.45)		
		6D	M5B	160 (320)	166 (330)	160 (320)	165 (330)	3.30 (116.47)		

(continued)

TABLE 4-1 (continued)

Test No.	Date (1982) and time (24-h)	Train ID	Sample type[a]	Sample temperature, °C (°F)				Metered volume,[b] dNm³ (dscf)	Average stack temperature, °C (°F)	Average moisture content,[c] %
				Probe		Filter				
				Desired	Actual	Desired	Actual			
7	11/12 15:31-17:01	7A	M5B	160 (320)	168 (335)	160 (320)	156 (314)	2.15 (75.97)	213 (416)	13.4
		7B	M5B	160 (320)	159 (318)	160 (320)	164 (328)	2.28 (80.70)		
		7C	M5W	121 (250)	124 (256)	121 (250)	125 (256)	2.50 (88.40)		
		7D	M5W	121 (250)	143 (290)	121 (250)	124 (256)	2.44 (86.23)		
8	11/13 12:04-14:04	8A	M5-450	232 (450)	242 (468)	232 (450)	237 (459)	2.88 (101.56)	217 (422)	10.7
		8B	M5-450	232 (450)	233 (451)	232 (450)	230 (446)	3.00 (105.99)		
		8C	M5W	121 (250)	120 (248)	121 (250)	123 (253)	3.41 (120.42)		
		8D	M5W	121 (250)	130 (265)	121 (250)	121 (250)	3.34 (117.98)		
9	11/14 10:18-12:18	9A	M5	121 (250)	128 (263)	121 (250)	125 (258)	2.84 (100.34)	214 (418)	9.5
		9B	M5	121 (250)	127 (261)	121 (250)	125 (257)	3.00 (106.14)		
		9C	M5B	160 (320)	185 (365)	160 (320)	162 (324)	3.36 (118.54)		
		9D	M5B	160 (320)	169 (336)	160 (320)	157 (315)	3.33 (117.60)		
10	11/14 13:46-15:26	10A	M5-450	232 (450)	234 (453)	232 (450)	237 (459)	2.44 (86.04)	217 (422)	11.1
		10B	M5-450	232 (450)	246 (475)	232 (450)	226 (439)	2.54 (89.57)		
		10C	M5B	160 (320)	159 (318)	160 (320)	166 (331)	2.71 (95.76)		
		10D	M5B	160 (320)	166 (331)	160 (320)	163 (326)	2.72 (96.05)		

[a]Designation:

M5 = Reference Method 5 - desired probe and filter temperature, 121°C (250°F).
M5B = Reference Method 5B - desired probe and filter temperature, 160°C (320°F).
M5-450 = Modified Method 5 - desired probe and filter temperature, 232°C (450°F).
M5W = Modified Method 5 - desired probe and filter temperature, 121°C (250°F) with a water rinse of the probe and analysis for total water soluble sulfate and corresponding mass determination.

[c]Represents average of moisture content as determined gravimetrically from two individual trains (C and D only).

[d]Represents average of moisture content as determined gravimetrically from Train C only.

The moisture contents as determined gravimetrically are probably biased low because of the inability to keep gases leaving the last impinger below 20°C (68°F), particularly for the high-temperature sample runs. Based on historial test results from this source and results obtained from sampling runs 1, 3, 5, and 7, the moisture content of the gas stream was approximately 13.5 percent.

4.2 THERMOGRAVIMETRIC ANALYTICAL RESULTS

Table 4-2 presents the thermogravimetric analytical results. The filterable particulate reported in this table represents material collected in the sample probe and on the filter for each sample type (M5, M5B, M5-450). All weights are reported in milligrams, and sample concentrations were reported in milligrams per dry normal cubic meter.

As previously noted, the samples were heat-conditioned at each designated interval for 6 hours, except for samples 3A and C, 5B and D, and 7C, which were heated for 24 hours for comparative purposes. Table 4-3 presents within-run comparisons on a total weight basis, and Table 4-4 provides within-run comparisons of the total losses and losses above 160°C. As shown, the ambient weights for each run, excluding 9C and 9D, were highly variable, which made an absolute assessment of the effects of heat-conditioning time difficult. With the exception of Run 10, the ambient weights of samples ultimately heated for 24 hours ranged from 9 to 55 percent higher than samples heated for 6 hours, and

TABLE 4-2. SUMMARY OF THERMOGRAVIMETRIC ANALYTICAL RESULTS

Test No.	Train ID	Sample type	Filterable particulate following conditioning at indicated temperatures, °C (°F), mg							
			Ambient		160°C (320°F)		232°C (450°F)		316°C (600°F)	
			Probe	Filter	Probe	Filter	Probe	Filter	Probe	Filter
1	1A	M5	131.6	93.0	42.4	65.6	23.8	68.5	18.0	62.0
	1B	M5	136.4	84.6	40.2	64.8	23.6	67.4	19.0	61.5
	1C	M5W	-	-	-	-	-	-	-	-
	1D	M5W	-	-	-	-	-	-	-	-
2	2A	M5-450	31.4	38.2	19.0	37.2	14.2	36.4	10.8	35.6
	2B	M5-450	25.8	38.5	15.1	36.4	8.9	36.0	5.9	34.5
	2C	M5B	29.9	45.0	20.1	43.2	15.5	42.1	12.5	41.6
	2D	M5B	30.1	45.5	19.5	43.3	14.5	42.5	11.6	42.0
3	3A	M5W	-	-	-	-	-	-	-	-
	3B	M5W	-	-	-	-	-	-	-	-
	3C	M5	131.6	112.2	-	-	40.0	91.9	31.5	80.8
	3D	M5	141.3	119.0	-	-	40.5	101.6	34.1	81.4
4	4A	M5-450	69.0	37.6	-	-	-	-	14.0[a]	32.8[a]
	4B	M5-450	26.5	39.4	-	-	-	-	10.3	36.7
	4C	M5B	35.8	44.6	-	-	-	-	14.6	41.6
	4D	M5B	55.9	42.0	-	-	-	-	17.8	39.4
5	5A	M5	134.3	62.6	27.5[a]	42.0[a]	15.1[a]	40.6[a]	12.8[a]	38.6[a]
	5B	M5	47.5	40.7	14.2	34.9	9.6	34.1	5.5	32.7
	5C	M5W	-	-	-	-	-	-	-	-
	5D	M5W	-	-	-	-	-	-	-	-
6	6A	M5-450	24.9	34.2	-	-	14.3	32.4	12.0	31.6
	6B	M5-450	39.5	35.0	-	-	18.5	33.8	15.3	33.1
	6C	M5B	35.3	43.3	-	-	16.1	40.4	14.1	38.8
	6D	M5B	22.8	40.4	-	-	12.6	38.4	10.6	36.6
7	7A	M5B	22.3	25.8	16.4	24.8	12.4	23.6	11.0	23.2
	7B	M5B	41.4	27.4	20.2[a]	26.0[a]	15.4[a]	24.3[a]	13.9[a]	22.8[a]
	7C	M5W	-	-	-	-	-	-	-	-
	7D	M5W	-	-	-	-	-	-	-	-
8	8A	M5-450	35.0	49.7	-	-	24.3	48.5	22.3	47.1
	8B	M5-450	28.4	56.8	-	-	-	-	17.6	53.7
	8C	M5W	-	-	-	-	-	-	-	-
	8D	M5W	-	-	-	-	-	-	-	-

(continued)

TABLE 4-2 (continued)

Test No.	Train ID	Sample type	Filterable particulate following conditioning at indicated temperatures, °C (°F), mg							
			Ambient		160°C (320°F)		232°C (450°F)		316°C (600°F)	
			Probe	Filter	Probe	Filter	Probe	Filter	Probe	Filter
9	9A	M5	196.0	84.6	-	-	-	-	28.4	44.6
	9B	M5	171.0	74.4	-	-	-	-	19.0	40.6
	9C	M5B	26.1	37.1	19.2[a]	34.4[a]	15.4[a]	32.3[a]	14.6[a]	29.9[a]
	9D	M5B	15.0	42.5	10.6	41.1	8.0	40.6	6.3	39.8
10	10A	M5-450	20.9	24.2	-	-	9.5	23.0	8.2	22.2
	10B	M5-450	21.5	23.3	-	-	-	-	10.2	20.2
	10C	M5B	19.8	28.9	11.3[a]	27.1[a]	9.0[a]	25.1[a]	7.8[a]	23.8[a]
	10D	M5B	48.8	29.6	25.2	27.4	20.2	26.0	16.2	24.6

[a]Heated for 24 hours; all others heated for 6 hours.

TABLE 4-3. WITHIN-RUN COMPARISONS ON A TOTAL WEIGHT BASIS

Sample ID	Sample type	Ambient weight,[a] mg	Weight after heating at indicated temperature,[b] mg		
			160°C	232°C	315°F
5A (24)	M5	196.9	69.5 (65)	55.7 (72)	51.4 (74)
5B (6)	M5	88.2	49.1 (44)	43.7 (50)	38.2 (57)
7A (6)	M5B	48.1	41.2 (14)	36.0 (25)	34.2 (29)
7B (24)	M5B	68.8	46.2 (33)	39.7 (42)	36.7 (47)
9C (24)	M5B	63.2	53.6 (15)	47.7 (25)	44.5 (30)
9D (6)	M5B	57.5	51.7 (10)	48.6 (15)	46.1 (20)
10C (24)	M5B	48.7	38.4 (21)	34.1 (30)	31.6 (35)
10D (6)	M5B	78.4	52.6 (33)	46.2 (41)	40.8 (48)
4A (24)	M5-450	106.6	-	-	46.8 (56)
4B (6)	M5-450	65.9	-	-	47.0 (29)

[a]Ambient weights (filter and probe rinse fractions) in milligrams.

[b]Weight after heat treatment at individual temperature. The numbers in parentheses represents the relative percent weight loss for each heat interval compared with ambient weight.

TABLE 4-4. COMPARISON OF WEIGHT LOSS ABOVE 160°C FOR 6- AND 24-HOUR HEAT-CONDITIONING TIME PERIODS

Run No.	Sample type	Heating time, h	Ambient weight, mg	Total weight loss to 316°C (600°F), mg	Weight loss above 160°C (320°F), mg	Weight loss above 160°C (320°F), %
5A	M5	24	196.9	145.5	18.1	12
5B	M5	6	88.2	50.0	10.9	22
7A	M5B	6	48.1	13.9	7.0	50
7B	M5B	24	68.8	32.1	9.5	30
9C	M5B	24	63.2	18.7	9.1	49
9D	M5B	6	57.5	11.4	5.6	49
10C	M5B	24	48.7	17.1	6.8	40
10D	M5B	6	78.4	37.6	11.8	31

correspondingly, the relative percent weight loss for the 24-hour samples was consistently higher than the percent weight observed for sample fractions heated for 6 hours. In Run 10, however, the sample heated for 6 hours had a higher ambient weight and also showed a higher relative percent weight loss than the sample heated for 24 hours.

Data from Runs 4 and 9 also indicate that no significant difference exists between the 6- and 24-hour heat-conditioning periods (less than 5 percent difference in the weights for each conditioning temperature.)

In summary, the data indicate that either heat-conditioning period is adequate and that final sample weights obtained at a given conditioning temperature are more a function of the mass of condensible material collected than the conditioning time interval. This is consistent with the data obtained at the first FCCU unit tested under this task assignment.*

Table 4-5 presents a comparison of particulate concentrations after heat conditioning at the indicated temperatures. The average concentration and standard deviations are given in milligrams per dry normal cubic meter for all samples of a similar type and temperature. The number of data points at each temperature is also shown. Table 4-6 summarizes the relative percent weight loss by sample fraction at the indicated temperatures.

---

*PEDCo Environmental, Inc. Method Development and Testing for FCCU Regenerators. Final Report. Prepared under Contract No. 68-02-3546, Task Nos. 14 and 20. February 1984.

TABLE 4-5. COMPARISON OF FILTERABLE PARTICULATE CONCENTRATIONS AFTER CONDITIONING AT TEMPERATURES 160°, 232°, AND 315°C

Run No.	Sample ID	Ambient		160°C		232°C		315°C	
		Total weight,[a] mg	Concentration,[b] mg/m³	Total weight, mg	Concentration, mg/m³	Total weight, mg	Concentration, mg/m³	Total weight, mg	Concentration, mg/m³
1A	M5	224.6	76.4	108.0	36.7	92.3	31.4	80.0	27.2
1B	M5	221.0	72.5	105.0	34.4	91.0	29.8	80.5	26.4
3C	M5	243.8	74.1	-	-	131.9	40.1	112.3	34.1
3D	M5	260.3	80.1	-	-	142.1	43.7	115.5	35.5
5A[c]	M5	196.9	92.0	69.5	32.5	55.7	26.0	51.4	24.0
5B	M5	88.2	39.4	49.1	21.9	43.7	19.5	38.2	17.1
9A	M5	280.6	98.8	-	-	-	-	73.0	25.7
9B	M5	245.4	81.8	-	-	-	-	59.6	19.9
		Average = 76.9 σ[c] = 17.6 N[d] = 8		Average = 31.4 σ = 6.5 N = 4		Average = 31.8 σ = 8.9 N = 6		Average = 26.2 σ = 6.3 N = 8	
2C	M5B	74.9	22.8	63.3	19.3	57.6	17.6	54.1	16.5
2D	M5B	75.6	23.3	62.8	19.3	57.0	17.5	53.6	16.5
4C	M5B	80.4	23.6	-	-	-	-	56.2	16.5
4D	M5B	97.9	29.8	-	-	-	-	57.2	17.4
6C	M5B	78.6	23.5	-	-	56.5	16.9	52.9	15.8
6D	M5B	63.2	19.2	-	-	51.0	15.5	47.2	14.3
7A	M5B	48.1	22.4	41.2	19.2	36.0	16.7	34.2	15.9
7B[c]	M5B	68.8	30.2	46.2	20.3	39.7	17.4	36.7	16.1
9C[c]	M5B	63.2	18.8	53.6	16.0	47.7	14.2	44.5	13.2
9D	M5B	57.5	17.3	51.7	15.5	48.6	14.6	46.1	13.8
10C[c]	M5B	48.7	18.0	38.4	14.2	34.1	12.6	31.6	11.7
10D	M5B	78.4	28.8	52.6	19.3	46.2	17.0	40.8	15.0
		Average = 23.1 σ[c] = 4.5 N[d] = 12		Average = 17.9 σ = 2.3 N = 8		Average = 16.0 σ = 1.7 N = 10		Average = 15.2 σ = 1.7 N = 12	

(continued)

TABLE 4-5 (continued)

Run No.	Sample ID	Ambient		160°C		232°C		315°C	
		Total weight,[a] mg	Concentration,[b] mg/m³	Total weight, mg	Concentration, mg/m³	Total weight, mg	Concentration, mg/m³	Total weight, mg	Concentration, mg/m³
2A	M5-450	69.6	24.8	56.2	20.0	50.6	18.0	46.4	16.5
2B	M5-450	64.3	24.5	51.5	19.7	44.9	17.1	40.4	15.4
4A[c]	M5-450	106.6	36.9	-	-	-	-	46.8	16.2
4B	M5-450	65.9	20.9	-	-	-	-	47.0	14.9
6A	M5-450	59.1	20.8	-	-	46.7	16.4	43.6	15.4
6B	M5-450	74.5	24.7	-	-	52.3	17.3	48.4	16.0
8A	M5-450	84.7	29.4	-	-	72.8	25.3	69.4	24.1
8B	M5-450	85.2	28.4	-	-	-	-	71.3	23.8
10A	M5-450	45.1	18.5	-	-	32.5	13.3	30.4	12.5
10B	M5-450	44.8	17.6	-	-	-	-	30.4	12.0
		Average = 24.7 σ[c] = 5.8 N[d] = 10		Average = 19.9 σ = 0.2 N = 2		Average = 17.9 σ = 4.0 N = 6		Average = 16.7 σ = 4.1 N = 10	

[a]Total filterable catch (probe rinse and filter).

[b]Concentration in milligrams per dry normal standard cubic meter.

[c]Standard deviation with N-1 weighting for sample data.

[d]Number of data points.

TABLE 4-6. FILTERABLE PARTICULATE RELATIVE PERCENT WEIGHT LOSS AFTER CONDITIONING AT TEMPERATURES 160°, 232°, AND 315°C

Run No.	Sample ID	Ambient temperature		160°C (320°F)				232°C (450°F)				315°C (600°F)			
		Conc., mg		Conc., mg		Wt. loss, %		Conc., mg		Wt. loss, %		Conc., mg		Wt. loss, %	
		Rinse	Filter	Rinse	Filter	Rinse	Filter	Rinse	Filter	Rinse	Filter	Rinse	Filter	Rinse	Filter
1A	M5	131.6	93.0	42.4	65.6	68	29	23.8	68.5	82	26	18.0	62.0	86	33
1B	M5	136.4	84.6	40.2	64.8	71	23	23.6	67.4	83	20	19.0	61.5	86	27
3C	M5	131.6	112.2	-	-	-	-	40.0	91.9	70	18	31.5	80.8	76	28
3D	M5	141.3	119.0	-	-	-	-	40.5	101.6	71	15	34.1	81.4	76	32
5A	M5	134.3	62.6	27.5	42.0	80	33	15.1	40.6	89	35	12.8	38.6	90	38
5B	M5	47.5	40.7	14.2	34.9	70	14	9.6	34.1	80	16	5.5	32.7	88	20
9A	M5	196.0	84.6	-	-	-	-	-	-	-	-	28.4	44.6	86	47
9B	M5	171.0	74.4	-	-	-	-	-	-	-	-	19.0	40.6	89	45
2C	M5B	29.9	45.0	20.1	43.2	33	4	15.5	42.1	48	6	12.5	41.6	58	8
2D	M5B	30.1	45.5	19.5	43.3	35	5	14.5	42.5	52	7	11.6	42.0	61	8
4C	M5B	35.8	44.6	-	-	-	-	-	-	-	-	14.6	41.6	59	7
4D	M5B	55.9	42.0	-	-	-	-	-	-	-	-	17.8	39.4	68	6
6C	M5B	35.3	43.3	-	-	-	-	16.1	40.4	54	7	14.1	38.8	60	10
6D	M5B	22.8	40.4	-	-	-	-	12.6	38.4	45	5	10.6	36.6	54	9
7A	M5B	22.3	25.8	16.4	24.8	26	4	12.4	23.6	44	9	11.0	23.2	51	10
7B	M5B	41.4	27.4	20.2	26.0	51	5	15.4	24.3	63	11	13.9	22.8	66	17
9C	M5B	26.1	37.1	19.2	34.4	26	7	15.4	32.3	41	13	14.6	29.9	44	19
9D	M5B	15.0	42.5	10.6	41.1	29	3	8.0	40.6	47	4	6.3	39.8	58	6
10C	M5B	19.8	28.9	11.3	27.1	43	6	9.0	25.1	55	13	7.8	23.8	61	18
10D	M5B	48.8	29.6	25.2	27.4	48	7	20.2	26.0	59	12	16.2	24.6	67	17
2A	M5-450	31.4	38.2	19.0	37.2	39	3	14.2	36.4	55	5	10.8	35.6	66	7
2B	M5-450	25.8	38.5	15.1	36.4	41	5	8.9	36.0	66	6	5.9	34.9	77	9
4A	M5-450	69.0	37.6	-	-	-	-	-	-	-	-	14.0	32.8	80	13
4B	M5-450	26.5	39.4	-	-	-	-	-	-	-	-	10.3	36.7	61	7
6A	M5-450	24.9	34.2	-	-	-	-	14.3	32.4	43	5	12.0	31.6	52	8
6B	M5-450	39.5	35.0	-	-	-	-	18.5	33.8	53	4	15.3	33.1	61	5
8A	M5-450	35.0	49.7	-	-	-	-	24.3	48.5	31	2	22.3	47.1	36	5
8B	M5-450	28.4	56.8	-	-	-	-	-	-	-	-	17.6	53.7	38	5
10A	M5-450	20.9	24.2	-	-	-	-	9.5	23.0	56	5	8.2	22.2	61	8
10B	M5-450	21.5	23.3	-	-	-	-	-	0	-	-	10.2	20.2	53	13

$$\text{Weight loss} = \frac{\text{Ambient weight} - \text{160°, 232°, 315°C weight}}{\text{ambient weight}} \times 100$$

Figures 4-1 and 4-2 graphically depict some of these data. Table 4-7 summarizes the EPA Method 8* analytical results for sulfuric acid (H_2SO_4) and sulfur dioxide (SO_2).

Data presented in Tables 4-5 and 4-6 show the effects of sampling and analytical temperatures on the measurement of particulate emissions from this source. As expected, the M5 samples collected at 121°C (250°F) showed considerably higher particulate catch than the M5B [collected at 160°C (320°F) and M5-450 (collected at 232°C (450°F)] sampling runs. The M5 runs averaged 220.1 mg total ambient weight, with a corresponding average concentration of 76.9 mg/dNm³ and a standard deviation of 17.6 mg/dNm³. The M5B and M5-450 sample runs averaged 69.6 mg ambient weight (23.1 mg/dNm³, standard deviation of 4.5 mg/dNm³) and 70.0 mg ambient weight (24.7 mg/dNm³, standard deviation of 5.8 mg/dNm³), respectively.

After thermal treatment to 315°C (600°F), the weight of the M5 sample averaged 76.3 mg, with a corresponding average concentration of 26.2 mg/dNm³ and a standard deviation of 6.3 mg/dNm³. The concentrations of the M5B sample runs averaged 15.2 mg/dNm³, with a standard deviation of 1.7 mg/dNm³; the M5-450 concentrations averaged 16.7 mg/dNm³, with a standard deviation of 4.1 mg/dNm³ (Table 4-5).

The M5 rinse and filter samples consistently showed higher relative percent weight losses at each conditioning temperature than the M5B and M5-450 sample fractions (see Table 4-6). The

---

*40 CFR 60, Appendix A, Reference Method 8, July 1983.

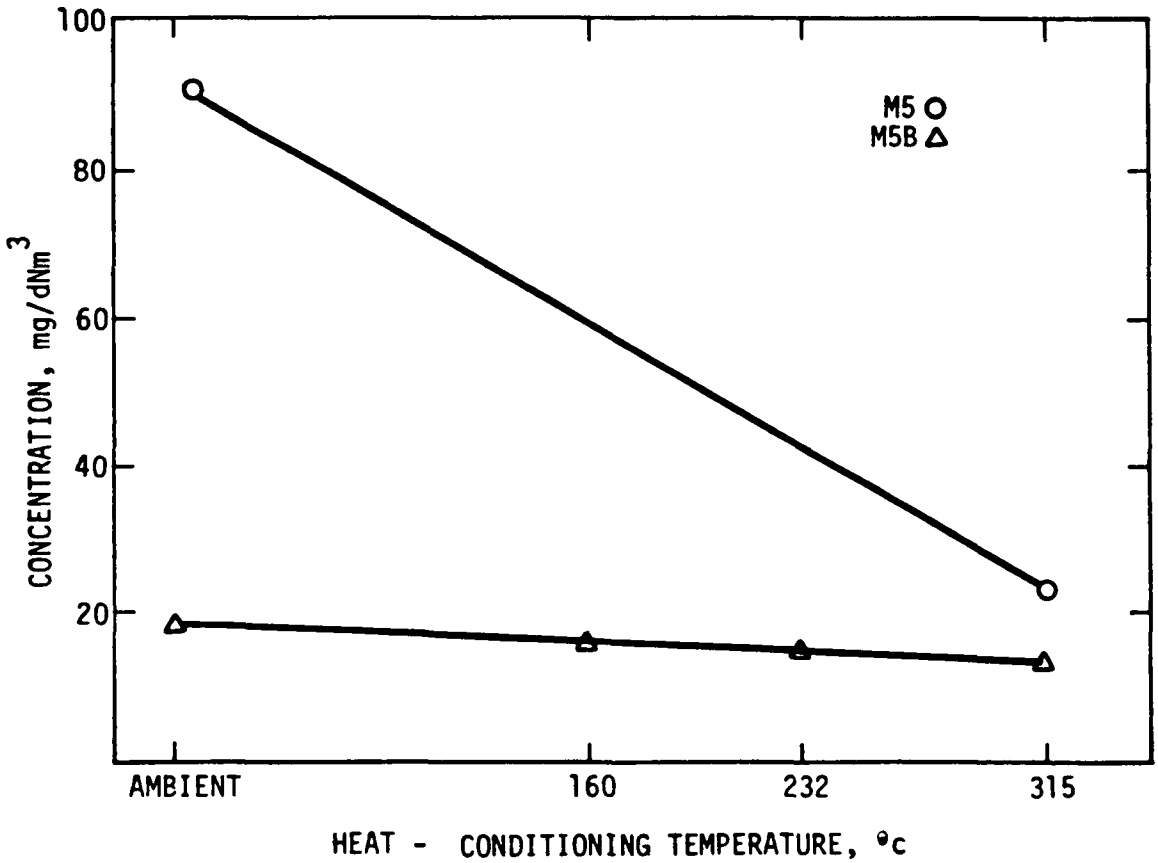

Figure 4-1. Average particulate concentration in Run 9 at indicated sample heat-conditioning temperature.

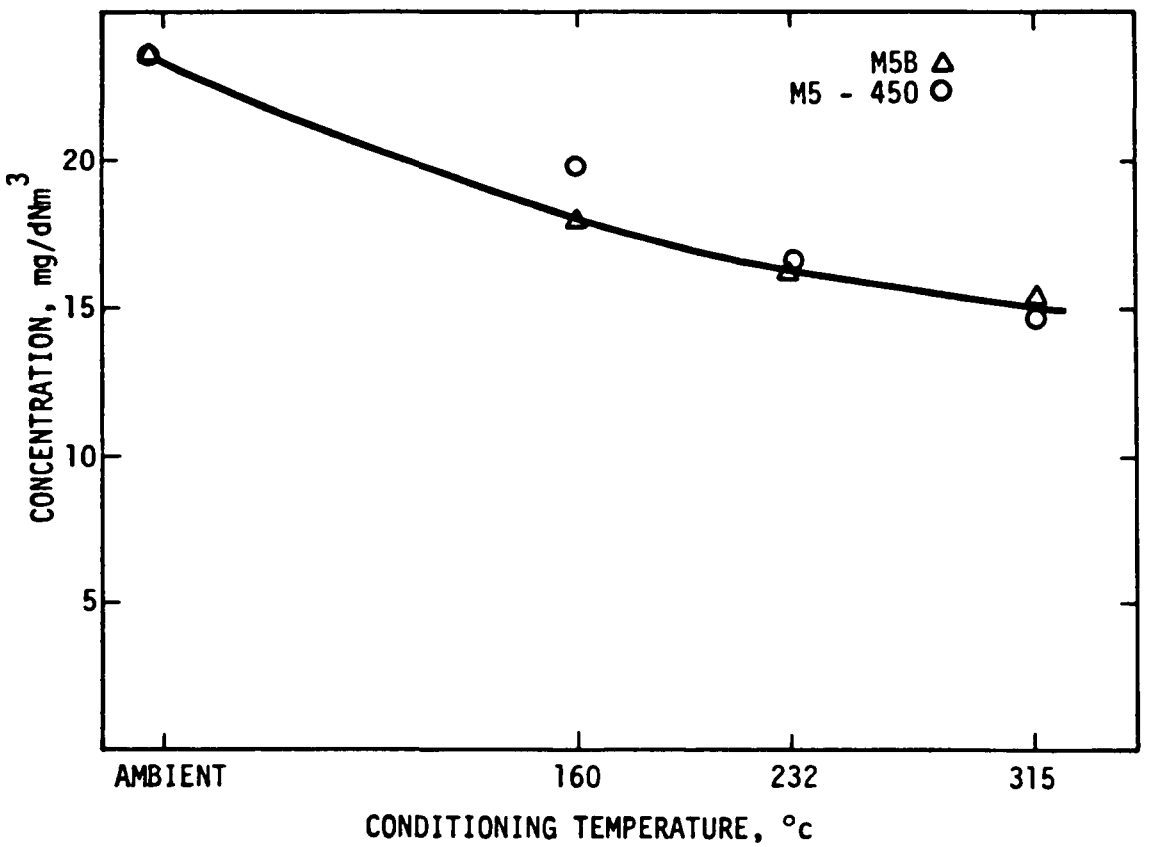

Figure 4-2. Average particulate concentration in Runs 2, 4, 6, and 10 at indicated conditioning temperature.

TABLE 4-7. SUMMARY OF H_2SO_4 AND SO_2 ANALYTICAL DATA

Test No.	Train ID	Sample type	H_2SO_4[a]		Total SO_2[b]	
			mg	mg/m³	mg	mg/m³
1	1A	M5	28.9	9.8	4130	1404.8
	1B	M5	16.3	5.3	3900	1278.7
	1C	M5W	23.3	7.2	4560	1407.4
	1D	M5W	68.3	21.4	4730	1482.8
2	2A	M5-450	69.2	24.6	4000	1423.5
	2B	M5-450	102.0	38.9	3860	1473.3
	2C	M5B	40.7	12.4	4740	1445.1
	2D	M5B	78.7	24.2	4750	1461.5
3	3A	M5W	42.1	14.7	4060	1419.6
	3B	M5W	79.5	26.5	4210	1403.3
	3C	M5	21.9	6.7	4670	1419.5
	3D	M5	32.9	10.1	4660	1433.8
4	4A	M5-450	207.0	71.9	3910	1357.6
	4B	M5-450	201.0	63.8	4080	1295.2
	4C	M5B	193.0	56.8	4560	1341.2
	4D	M5B	278.0	84.5	4580	1392.1
5	5A	M5	40.0	18.7	2840	1327.1
	5B	M5	71.3	31.8	3080	1375.0
	5C	M5W	54.3	21.9	3390	1366.9
	5D	M5W	86.2	34.9	3350	1356.3
6	6A	M5-450	189.0	66.5	4030	1419.0
	6B	M5-450	252.0	83.4	4140	1370.9
	6C	M5B	226.0	67.5	4680	1397.0
	6D	M5B	182.0	55.2	4630	1403.0
7	7A	M5B	135.0	62.8	3120	1451.2
	7B	M5B	148.0	64.9	3180	1394.7
	7C	M5W	109.0	43.6	2650	1060.0
	7D	M5W	154.0	63.1	3590	1471.3

(continued)

TABLE 4-7 (continued)

Test No.	Train ID	Sample type	H_2SO_4[a]		Total SO_2[b]	
			mg	mg/m³	mg	mg/m³
8	8A	M5-450	158.0	54.9	3980	1381.9
	8B	M5-450	102.0	34.0	4050	1350.0
	8C	M5W	620.0	181.8	3730	1093.8
	8D	M5W	93.6	28.0	4650	1392.2
9	9A	M5	59.1	20.8	4480	1577.5
	9B	M5	53.3	17.8	4400	1466.7
	9C	M5B	360.0	107.1	4790	1425.6
	9D	M5B	304.0	91.3	4920	1477.5
10	10A	M5-450	243.0	99.6	3530	1446.7
	10B	M5-450	218.0	85.8	3560	1401.6
	10C	M5B	277.0	102.2	4110	1516.6
	10D	M5B	273.0	100.4	4020	1477.9

[a]Total $SO_4^=$ (SO_3/H_2SO_4 mist) - analysis per Method 8 (40 CFR 60, Appendix A, Reference Method 8, July 1982).

[b]Total SO_2 - analysis per Method 8.

average M5 sample weight at 315°C was about 65 percent less than the ambient weight, compared with 33 percent for the M5B sample and 32 percent for the M5-450 sample. The largest percentage weight loss for the M5 rinse and filter fractions occurred at 160°C, and the difference in percent weight loss above 160°C is comparable to that in the M5B and M5-450 sample runs. Comparison of weight loss by sample fraction shows that both the M5B and M5-450 filter samples exhibited weight losses of less than 10 percent at each heat treatment. The M5 filters showed weight losses ranging from 14 to 47 percent, most of which occurred at 160°C. The weight loss from the probe rinse fraction of each sample type varied considerably. For all sample types, the probe rinse consistently showed higher relative percent weight loss than the filter.

Figure 4-1 shows how the average particulate concentrations in Run 9 compared according to whether sampling was performed by Method 5 or Method 5B. The largest difference occurs at ambient temperature. The average concentration in the M5 sample at ambient temperature was 80 percent higher than the average concentration in the M5B samples. At 315°C, the average concentration of the M5 samples was 41 percent higher than the average concentration of the M5B samples. These results indicate that the more condensible material collected, the greater the amount that remains at each temperature. Figure 4-2 shows the same comparison for M5B and M5-450 samples.

These comparisons show that controlling the sampling temperature to reduce the amount of the condensible particulate collected has a significant impact on the data.

The data presented in Tables 4-5 and 4-6 and Figures 4-1 and 4-2 show that sample temperature is a significant variable that directly affects the collection of condensible material in the front half of the standard Method 5 sample train. The current understanding of the thermogravimetric principle is that only sulfate present as H_2SO_4 is removed in the heating procedure, particularly at 160°C. Other water-soluble sulfates (e.g., ammonium sulfate or metal sulfates) would not be removed depending, of course, on the conditioning temperature. Therefore, the weight losses for each sample type that occur above 160°C are probably attributable to volatilization of sulfate species other than sulfuric acid. Subsection 4.3 of this report addresses this.

Data presented in Table 4-7 confirm the relationship between sample temperature and the collection of condensible material in the front half of the sampling train. For each test type, the H_2SO_4 content of the impinger section of the sampling train increased with increasing sampling temperature. The average concentration of H_2SO_4 for all M5 sample runs was 15.1 mg/dNm^3, compared with 69.1 mg/dNm^3 for M5B and 62.3 mg/dNm^3 for M5-450. Although the H_2SO_4 results are variable, there is a general within-run correlation between measured H_2SO_4 and the relative percent weight loss exhibited between similar samples. This

would suggest that H_2SO_4 is the primary sulfate species being collected, and significantly higher sampling temperatures [>121°C (250°F)] are required to minimize the condensation of sulfuric acid in the front half of the standard Method 5 sampling train.

Tables 4-8 and 4-9 present precision estimates for the heat treatments evaluated. In Table 4-8, each group represents two simultaneous runs of the same sample type. For each run group and temperature, the table lists the mean filterable concentration, the standard deviation with N-1 weighting for sample data, and the percent coefficient of variation (CV), which expresses the standard deviation as a percent of the mean concentration. Table 4-9 summarizes precision estimates for M5, M5B, and M5-450 test data at each conditioning temperature. The mean filterable concentrations were calculated by averaging the individual run data to minimize roundoff errors. The mean standard deviations were calculated by averaging standard deviation values for each set of grouped runs (Table 4-8) to minimize the effect of temporal variation in emissions. In this way, the mean standard deviation of the grouped runs ($\bar{\sigma}$ in Table 4-9) more accurately reflects method precision than does the standard deviation of individual run concentrations ($\bar{\sigma}$ in Table 4-5). The number of data points included in each calculation is shown for consideration in the evaluation of the precision estimates.

For a given group of runs, the within-run agreement was expected to improve after each stage of heat treatment because of further elimination of sulfate biases. Generally, the observed

TABLE 4-8. STATISTICAL DATA FOR GROUPED RUNS AFTER CONDITIONING AT INDICATED TEMPERATURES

Run No.	Sample type	Ambient			160°C (320°F)			232°C (450°F)			316°C (600°F)		
		$\bar{X}$,[a] mg/dNm³	σ,[b] mg/dNm³	CV,[c] %	$\bar{X}$, mg/dNm³	σ, mg/dNm³	CV, %	$\bar{X}$, mg/dNm³	σ, mg/dNm³	CV, %	$\bar{X}$, mg/dNm³	σ, mg/dNM³	CV, %
1A-B	M5	74.5	2.8	3.8	35.6	1.6	4.5	30.6	1.1	3.6	26.8	0.6	2.2
3C-D	M5	77.1	4.2	5.5	-	-	-	41.9	2.5	6.0	34.8	1.0	2.9
5A[d]-B	M5	65.7	37.2	56.6	27.2	7.5	27.6	22.8	4.6	20.2	20.6	4.9	23.8
9A-B	M5	90.3	12.0	13.3	-	-	-	-	-	-	22.8	4.1	18.0
2C-D	M5B	23.1	0.4	1.7	19.3	0	0	17.6	0.1	0.6	16.5	0	0
4C-D	M5B	26.7	4.4	16.5	-	-	-	-	-	-	17.0	0.6	3.5
6C-D	M5B	21.4	3.0	14.2	-	-	-	16.2	1.0	6.2	15.1	1.1	7.3
7A-B[d]	M5B	26.3	5.5	21.0	19.8	0.8	4.0	17.1	0.5	2.9	16.0	0.1	0.6
9C[d]-D	M5B	18.1	1.1	6.1	15.8	0.4	2.5	14.4	0.3	2.1	13.5	0.4	3.0
10C[d]-D	M5B	23.4	7.6	32.5	16.8	3.6	21.4	14.8	3.1	21.0	13.4	2.3	17.2
2A-B	M5-450	24.7	0.2	0.8	19.9	0.2	1.0	17.6	0.6	3.4	16.0	0.8	5.0
4A[d]-B	M5-450	28.9	11.3	39.1	-	-	-	-	-	-	15.6	0.9	5.8
6A-B	M5-450	22.8	2.8	12.3	-	-	-	16.9	0.6	3.6	15.7	0.4	2.5
8A-B	M5-450	28.9	0.7	2.4	-	-	-	-	-	-	24.0	0.2	0.8
10A-B	M5-450	18.1	0.6	3.3	-	-	-	-	-	-	12.3	0.4	3.3

[a]Mean filterable concentration.

[b]Within-run standard deviation with N-1 weighting for sample data.

[c]Coefficient variance is the standard deviation expressed as a percent of the mean concentration.

[d]Samples heated for 24 hours.

TABLE 4-9. SUMMARY OF PRECISION ESTIMATES AFTER CONDITIONING AT INDICATED TEMPERATURES

Run No.	Sample type	Ambient			160°C (320°F)			232°C (450°F)			316°C (600°F)		
		$\bar{X}$,[a] mg/dNm³	σ,[b] mg/dNm³	$\bar{CV}$,[c] %	$\bar{X}$, mg/dNm³	σ, mg/dNm³	$\bar{CV}$, %	$\bar{X}$, mg/dNm³	σ, mg/dNm³	$\bar{CV}$, %	$\bar{X}$, mg/dNm³	σ, mg/dNM³	$\bar{CV}$, %
1,3,5,9	M5	76.9	14.1 N[d] = 8	18.3	31.4	4.6 N = 4	14.5	31.8	2.7 N = 6	8.6	26.2	2.7 N = 8	10.1
2,4,6, 7,9,10	M5B	23.1	3.7 N = 12	15.9	17.9	1.2 N = 8	6.7	16.0	1.0 N = 10	6.3	15.2	0.8 N = 12	4.9
2,4,6 8,10	M5-450	24.7	3.1 N = 10	12.6	19.9	0.2 N = 2	1.0	17.2	0.6 N = 4	3.5	16.7	0.5 N = 10	3.2

[a]Mean filterable concentration based on grouped run values.

[b]Mean standard deviation of grouped runs $(\frac{\Sigma \sigma i}{N})$.

[c]Mean coefficient variation (percent) calculated from the mean standard deviation and the filterable and the mean filterable concentration of grouped runs.

[d]N = Number of data points.

precision was better after heating at 160°C, and for some samples, after heating at the subsequent higher temperatures. The precision decreased in some cases, however, probably as a result of increased sample handling.

The mean standard deviation for four M5 run groups was 14.1 mg/dNm³ at ambient conditions, which corresponds to a mean coefficient of variation (CV) of 18.3 percent. The six M5B run groups had a mean standard deviation of 3.7 mg/dNm³ and a corresponding mean CV of 15.9 percent at ambient conditions. The five M5-450 run groups had a mean standard deviation of 3.1 mg/dNm³ and a corresponding mean CV of 12.6 percent at ambient conditions.

The mean standard deviation for two M5 run groups heated to 160°C (320°F) was 4.6 mg/dNm³ and the corresponding CV was 14.5 percent, which was an improvement over results at ambient conditions. For the four M5B run groups heated to 160°C, the mean standard deviation and CV were 1.2 mg/dNm³ and 6.7 percent, respectively. The one M5-450 run group heated to 160°C showed a mean standard deviation of 0.2 mg/dNm³ and a CV of 1.0 percent.

Precision data for the M5 run groups heated to 232°C (450°F) included a mean standard deviation of 2.7 mg/dNm³ and a CV of 8.6 percent. For the five M5B run groups, the average standard deviation and CV were 1.0 mg/dNm³ and 6.3 percent. The M5-450 runs showed a mean standard deviation of 0.6 mg/dNm³ and a CV of 3.5 percent.

Precision data for the M5 groups heated to 316°C (600°F) included a mean standard deviation of 2.7 mg/dNm³ and a CV of

10.1 percent. For the M5B samples, the mean standard deviation and CV were 0.8 mg/dNm³ and 4.9 percent. Four of the six M5B runs, however, had a mean standard deviation of less than 1.0 mg/dNm³ and a corresponding CV of less than 4 percent. For the M5-450 runs, the mean standard deviation and CV were 0.5 mg/dNm³ and 3.2 percent.

All of these statistical results indicate a high degree of precision for the majority of samples. The enhanced precision of each group was expected because of the reduction in the amounts of condensible material from rinse and filter fractions. These precision estimates are comparable to data obtained at the first FCCU source evaluated under this task assignment.

4.3 WATER-SOLUBLE SULFATE ANALYTICAL DATA

Table 4-10 summarizes results from the water-soluble sulfate analysis performed on the indicated samples. Since particulate cannot be determined gravimetrically in the presence of sulfuric acid (because of the inexact amount of water retained by the acid), this method is designed to convert the acid to a nonhydroscopic, nonvolatile product (in this case ammonium sulfate). The acid is converted to ammonium sulfate and the weight of ammonium sulfate calculated from an independent sulfate determination is subtracted from the total weight. Section 3 and Appendix D of this report detail the sample preparation and analytical techniques as well as equipment and reagents used to perform this analysis. Appendix C contains data and example calculations for this method.

TABLE 4-10. SUMMARY OF WATER-SOLUBLE SULFATE ANALYTICAL RESULTS

Test No.	Sample ID	Total NWSSP,[a] mg	Concentration, mg/dNm³	Statistical data for grouped runs		
				$\bar{X}$,[b] mg/dNm³	$\bar{\sigma}$,[c] mg/dNm³	$\overline{CV}$,[d] %
1C	M5W	53.8	16.6	16.6	0.0	0
1D	M5W	52.8	16.6			
3A	M5W	66.6	23.3	22.1	1.8	8.1
3B	M5W	62.4	20.8			
5C	M5W	51.9	20.9	-	-	-
5D	M5W	29.9[e]	12.1[e]			
7C	M5W	25.0	10.0[f]	-	-	-
7D	M5W	53.5	21.9			
8C	M5W	56.6	16.6	17.2	0.9	5.3
8D	M5W	59.9	17.9			

Average = 19.3

σ = 2.7

N = 8

[a]Total non-water-soluble sulfate particulates (NWSSP of probe and filter fractions) determined by the Texas Air Board water-soluble sulfate analytical method as modified, with ion chromatography used to determine water-soluble sulfate.

[b]Mean filterable concentration.

[c]Within-run standard deviation with N-1 weighting for sample data.

[d]Coefficient of variance is the standard deviation expressed as a percent of the mean concentration.

[e]Only the filter fraction is reported. Results from this run not included in the group averages.

[f]Probe rinse value very low. Results from this run not included in group averages.

The M5W sample runs (excluding Runs 5D and 7C) showed an average non-water-soluble sulfate particulate concentration of 19.3 mg/dNm³ with a standard deviation of 2.7 mg/dNm³. Statistical data for grouped runs (excluding Runs 5 and 7) exhibited a high degree of precision, as characterized by a mean standard deviation of 0.9 mg/dNm³ and a corresponding mean CV of 4.8 percent. A direct comparison of the M5W results with the thermogravimetric results for M5 and M5-450 at 315°C (concentration basis) shows that the M5W results averaged 19.3 mg/dNm³ for Runs 1 and 3, whereas the M5 results averaged 30.8 mg/dNm³ for the same runs. In Run 8, the average values were 17.3 mg/dNm³ for M5W and 24.0 mg/dNm³ for M5-450. No direct comparison with M5B is possible.

These data are consistent with the basic principle of the thermogravimetric procedure in that only H_2SO_4 and associated water are removed by heating at 160°C, whereas additional sulfate species (metal sulfates, ammonium sulfate, and possibly some residual H_2SO_4) could not be removed. If these other sulfate species were water-soluble, the expected M5W results would be lower because the method is designed to correct for total water-soluble sulfate, which includes H_2SO_4.

In an effort to characterize this difference, the within-run heat-conditioned samples were extracted with water, and aliquots were analyzed by ion chromatography (IC) for residual water-soluble sulfates as $SO_4^{=}$. Table 4-11 presents the results of the within-run residual sulfate analysis. As shown, both the rinse

TABLE 4-11. SUMMARY OF RESULTS FOR RESIDUAL SULFATE ($SO_4^=$) ON WITHIN-IN RUN SAMPLES CONDITIONED AT 315°C

Sample ID	Sample[a] type	Residual sulfate as $SO_4^=$[b]		
		Probe rinse, mg	Filter, mg	Total, mg
1A	M5	6.3	19.5	25.8
1B	M5	7.1	20.7	27.8
3C	M5	10.1	28.5	38.6
3D	M5	12.6	28.9	41.5
5A	M5	4.6	12.9	17.5
5B	M5	1.9	7.1	9.0
7A	M5B	1.4	3.1	4.5
7B	M5B	3.5	3.1	6.6
8A	M5-450	2.9	3.8	6.7
8B	M5-450	1.4	4.5	5.9

[a]These samples, previously heat-conditioned to ≥315°C, were extracted with water and analyzed for total sulfate ($SO_4^=$) with ion chromatography.

[b]Total sulfate ($SO_4^=$) determined by IC from aliquots of probe rinse and filter fractions.

and filter fractions contained residual sulfate ranging from 1.4 to 12.6 mg in the probe fraction and from 3.1 to 28.9 mg in the filter fraction. All samples exhibited the same basic characteristics; i.e, residual water-soluble sulfate was found in each sample fraction. Considerably more residual sulfate was present in the M5 samples than in the M5B or M5-450 samples.

The particulate concentrations in samples conditioned to 315°C were corrected for residual sulfate and compared against the M5W results. Table 4-12 summarizes the comparative data. Considering the overall complexity of the M5W sample analysis and the number of analytical steps involved in the thermogravimetric and IC procedures, the data in Table 4-12 show no significant difference between the M5W results and the M5 results heated to 315°C and corrected for residual sulfate. These data substantiate the conclusion that the primary difference in particulate concentrations between samples heat-conditioned to 315°C and the calculated M5W results represent water-soluble sulfate species not removed by thermal treatment. No conclusion can be drawn from the comparison of M5W results with M5B and M5-450 results based on a single run of each method.

As a further check, the remaining M5, M5B, and M5-450 sample fractions were extracted with water and analyzed by IC for residual sulfate. Table 4-13 summarizes these data, which exhibit similar characteristics to the data presented in Tables 4-11 and 4-12. Residual sulfate as $SO_4^=$ was found in each sample, and particulate concentrations corrected for residual $SO_4^=$ agreed

TABLE 4-12. COMPARISON OF WITHIN-IN RUN PARTICULATE CONCENTRATIONS AFTER CORRECTION FOR RESIDUAL SULFATE TO THE M5W TEST RESULTS

Sample ID	Uncorrected particulate concentration,[a] mg/dNm³	Corrected particulate concentration,[b] mg/dNm³
1A M5	27.2	18.4
1B M5	26.4	17.3
1C M5W	NA[c]	16.6
1D M5W	NA	16.6
3A M5W	NA	23.3
3B M5W	NA	20.8
3C M5	34.1	22.4
3D M5	35.5	22.8
5A M5	24.0	15.8
5B M5	17.1	13.0
5C M5W	NA	20.9
5D M5W	NA	12.1[d]
7A M5B	15.9	13.8
7B M5B	16.1	13.2
7C M5W	NA	10.0[e]
7D M5W	NA	21.9
8A M5-450	24.1	21.8
8B M5-450	23.8	21.8
8C M5W	NA	16.6
8D M5W	NA	17.9

[a]The uncorrected concentrations for M5 and M5B samples are calculated concentrations after conditioning at 315°C.

[b]The corrected particulate concentrations for the M5 and M5B samples were calculated by subtracting the weight of residual sulfate as $SO_4^=$ (Table 4-11) from the total catch at 315°C and dividing by the sample volume.

[c]Not applicable.

[d]Only the filter fraction is reported.

[e]Probe rinse value is very low.

TABLE 4-13. SUMMARY OF RESIDUAL SULFATE ($SO_4^=$) RESULTS ON SAMPLES CONDITIONED AT 315°C

Run No.	Sample ID	Total sulfates as $SO_4^=$, mg			Particulate[a] concentration, mg/dNm³	
		Rinse	Filter	Total[b]	Uncorrected	Corrected
2A	M5-450	0.9	3.0	3.9	16.5	15.1
2B	M5-450	1.0	3.2	4.2	15.4	13.8
2C	M5B	2.4	3.5	5.9	16.5	14.7
2D	M5B	2.4	4.8	7.2	16.5	14.3
4A	M5-450	4.0	3.2	7.2	16.2	13.8
4B	M5-450	1.4	3.8	5.2	14.9	13.3
4C	M5B	2.7	4.1	6.8	16.5	14.5
4D	M5B	4.0	4.1	8.1	17.4	14.9
6A	M5-450	0.8	3.0	3.8	15.4	14.0
6B	M5-450	3.5	3.5	7.0	16.0	13.7
6C	M5B	4.1	4.6	8.7	15.8	13.2
6D	M5B	1.7	3.3	5.0	14.3	12.8
9A	M5	10.4	16.1	26.5	25.7	16.4
9B	M5	7.4	13.1	20.5	19.9	13.0
9C	M5B	2.2	3.4	5.6	13.2	11.6
9D	M5B	1.4	4.0	5.4	13.8	12.2
10A	M5-450	0.8	2.8	3.6	12.5	11.0
10B	M5-450	1.2	2.6	3.8	12.0	10.5
10C	M5B	1.6	4.1	5.7	11.7	9.6
10D	M5B	4.4	4.1	8.5	15.0	11.9

[a]Particulate concentration in milligrams per cubic meter. The uncorrected concentrations represent rinse and filter catch after heat-conditioning at 315°C. The corrected values represent particulate concentration after adjusting the sample fractions for the $SO_4^=$ values obtained by IC analysis.

[b]Total residual sulfate is the summation of the rinse and filter fraction in milligrams.

closely for each sample type. The average corrected M5B concentration for Runs 2, 4, 6, and 10 was 13.2 mg/dNm³, compared with 13.2 mg/dNm³ for M5-450. The average corrected M5 concentration for Run 9 was 14.7 mg/dNm³ compared with 11.9 mg/dNm³ for M5B.

For the characterization of sulfate species other than H_2SO_4, extracts of samples from Runs 2 and 9 were analyzed by ICP for cations. The results of this analysis are presented in Table 4-14.

A 40-element ICP scan was performed. Four nonmetals were included in this list--boron, phosphorous, silicon, and sulfur. Sulfur was converted to the equivalent amount of sulfate. As shown in Table 4-15, agreement is good between the sulfate values obtained on the IC and those obtained by ICP (except for Run 1C filter) when one considers the ability of ICP to detect sulfur. Twenty-four elements were below 0.01 mg/liter or not detected. Three others (lithium, strontium, and titanium) were less than 0.1 mg/liter. At 0.1 mg/liter, the contribution of these elements is insignificant compared with that of calcium and sodium at 2 mg/liter.

Table 4-16 presents the charge balance for the 16 samples analyzed by ICP. Calculations of this charge balance are based on each cation having the charge listed in Table 4-14 and all sulfate presented as SO_4^{-2}. The values for the M5W filter samples averaged 0.54 mg, and those for the probe rinse samples averaged 0.09 mg. These values indicate that more than 46 percent of the sulfate on the filter and more thna 90 percent of the

TABLE 4-14. CATIONS FOUND IN WATER EXTRACTION BY ICP

Sample ID	Sample type	Metal, mg								
		Al^{+3}	Ca^{+2}	Fe^{+3}	K^{+}	Mg^{+2}	Na^{+}	Ni^{+2}	V^{+2}	Zn^{+2}
1A Probe rinse	M5	0.50	0.090	0.068	<0.01	<0.008	0.35	0.006	<0.0008	0.20
1A Filter	M5	2.45	0.38	0.22	<0.01	<0.008	0.65	0.06	0.072	0.008
1B Probe rinse	M5	0.65	0.052	0.065	<0.01	<0.008	0.32	0.007	<0.0008	0.058
1B Filter	M5	2.50	0.38	0.22	<0.01	<0.008	0.70	0.06	0.065	0.010
1C Probe rinse	M5W	1.25	0.24	0.27	0.28	0.038	1.37	0.049	0.031	0.72
1C Filter	M5W	3.50	0.50	0.24	0.50	0.010	1.45	0.062	0.095	0.040
1D Probe rinse	M5W	0.86	0.11	0.18	<0.01	<0.01	0.72	0.008	0.002	0.54
1D Filter	M5W	0.68	0.35	0.092	0.25	0.032	0.78	0.011	NR[a]	0.008
7A Probe rinse	M5B	0.022	0.030	<0.002	<0.01	<0.008	0.24	<0.0008	<0.0008	0.018
7A Filter	M5B	<0.01	0.38	<0.002	<0.01	<0.008	0.52	<0.0008	<0.0008	0.004
7B Probe rinse	M5B	0.075	0.048	0.038	<0.01	<0.008	0.27	<0.0008	<0.0008	0.019
7B Filter	M5B	<0.01	0.50	0.011	<0.01	<0.008	0.55	<0.0008	<0.0008	0.018
7C Probe rinse	M5W	0.78	0.11	0.19	<0.01	<0.01	0.24	0.062	<0.001	0.97
7C Filter	M5W	2.50	0.50	0.19	0.42	0.040	0.70	0.038	0.060	0.019
7D Probe rinse	M5W	0.68	0.083	0.16	0.31	0.079	0.39	0.004	0.030	0.72
7D Filter	M5W	1.42	0.35	0.11	0.30	0.045	0.72	0.032	0.062	0.007

[a]NR = Not reported.

TABLE 4-15. SOLUBLE SULFATE PRESENT IN SAMPLE ANALYZED BY ICP

Sample ID	IC sulfate, mg		ICP sulfate, mg	
	Probe rinse	Filter	Probe rinse	Filter
1A M5	6.3	19.5	5.3	16.5
1B M5	7.1	20.7	6.8	19.5
1C M5W	109.0	44.2	105.9	4.1[a]
1D M5W	62.1	10.6	52.6	10.5
7A M5B	1.4	3.1	1.3	2.6
7B M5B	3.5	3.1	3.1	2.6
7C M5W	124.4	44.0	97.1	36.0
7D M5W	99.5	18.5	83.9	17.2

[a]Probable outlier.

TABLE 4-16. CHARGE BALANCE RESULTS FOR SAMPLES ANALYZED BY ICP

Sample ID	Charge balance[a]	
	Probe rinse	Filter
1A M5	0.65	0.83
1B M5	0.65	0.80
1C M5W	0.11	0.55
1D M5W	0.12	0.64
7A M5B	0.51	0.65
7B M5B	0.34	0.78
7C M5W	0.06	0.39
7D M5W	0.07	0.59

[a]Milliequivalents cations/milliequivalents sulfate.

probe rinse sulfate are present as sulfuric acid. This is in direct contrast to the M5 and M5B samples after heat-conditioning at 315°C; the average charge balance for the probe rinse of these samples was 0.54. The average charge balance for the M5 and M5B filters was 0.77, which means either that 77 percent of the sulfate is present as metal sulfates or that some of the metal salts on the filter and possibly all in probe rinse are present as bisulfates. This would account for the charge balance being less than 1.00. The formation of bisulfate is possible inasmuch as these salts are not being formed in a true solution, but rather in the gas phase, on the surface of the filter, or in a nonaqueous solution (acetone).

Based on the information from the thermogravimetric analysis and the results of these metal analyses, one might reasonably conclude that sulfuric acid collected with the particulate matter reacts to form metal sulfates and/or bisulfates. This artifact formation explains why the greater the amount of sulfuric acid collected during sampling, the higher the apparent particulate catch after the different heat treatments.

4.4 RECOMMENDATIONS FOR SAMPLE AND ANALYTICAL METHODOLOGY

Data gathered during this study support previous work that characterized condensible sulfate biases of particulate measurements at source emission streams containing sulfur oxides.[2,3,4,5,6] The EPA has stated that the intent of the NSPS for particulate

emissions from FCC units is to control "catalyst fines" or "mineral dust" and not the condensible sulfates that are present in the gas phase at the control device operating temperature. Emissions from fluid catalytic cracking and thermoform catalytic cracking units are known to contain sulfur oxides; therefore, sulfuric acid (H_2SO_4) and/or its metal and ammonium salts are the most probable forms of water-soluble sulfates. Water-soluble sulfate exists in many complex chemical forms, the most common being sulfuric acid. The results of this study show that H_2SO_4 is the predominant sulfate species in the FCCU emission stream and that metal sulfates, primarily sodium and calcium, constitute the remaining water-soluble sulfate of any significance. Therefore, a particulate sampling method designed to minimize the collection of H_2SO_4 and simultaneously reduce residual H_2SO_4 immediately prior to gravimetric analysis is required to minimize potentially high biases in particulate measurements from these sources.

It is evident that sample temperature significantly affects the retention of condensible sulfate (H_2SO_4 in this case) material in the front half of the standard Method 5 sampling train. The thermogravimetric and back-half H_2SO_4 data show that at sampling temperatures below 160°C (320°F), a significant amount of H_2SO_4 is retained in the front half of the Method 5 sampling train. Increasing the sampling temperatures (M5B and M5-450) reduces this amount, but does not eliminate it. If H_2SO_4 collected with the particulate condenses and reacts to form metal

sulfates and/or bisulfates, this artifact formation compounds the problem of accurately determining the true particulate emissions (catalyst fines) from the source.

In summary, the greater the amount of H_2SO_4 retained in the probe and on the filter, the greater the positive bias in particulate measurements will be from these sources. Increased H_2SO_4 retention in the probe and on the filter also increases the potential for artifact formation and additional positive bias in particulate measurements.

From an analytical standpoint, the thermogravimetric procedure is the easiest and least expensive technique for reducing H_2SO_4 bias on rinse and filter samples collected at this source. The data clearly show that the greater the amount of condensible sulfate (H_2SO_4) initially collected, the more that will remain at each heat interval, regardless of treatment temperature. The analytical data indicate that H_2SO_4 and its associated water are significantly reduced by heating sample fractions to at least 160°C (320°F) prior to gravimetric analysis. Observed weight losses at higher treatment temperatures are primarily attributable to the volatilization of residual H_2SO_4 and other water-soluble sulfates not removed by heating at 160°, 232°, or 315°C. The results from the water-soluble sulfate analysis of selected samples support this conclusion.

Based on the results of this and similar studies,[2,3,4,5,6] PEDCo offers the following recommendations relative to sample and analytical methodology for particulate measurement at FCCU sources.

Texas Air Control Board Method

The results of this study show that the Texas Air Control Board (TACB) method, entitled "Determination of Particulate in Stack Gases Containing Sulfur Dioxide," is applicable to these sources. Modifications to procedures detailed in the TACB method are presented in Section 3 and Appendix D of this report. A copy of the method as received from the TACB is presented in Appendix D.

Prior to analyzing field samples, PEDCo conducted an extensive laboratory evaluation of the method. The experimental design and the results of this study are described in a separate method evaluation report issued under this task assignment. This method entails the use of the sample procedures and temperature [121°C (250°F)] described in EPA Reference Method 5, except that the rinse agent is deionized distilled water instead of acetone. The method converts any sulfuric acid present to a suitable form for accurate gravimetric analysis. Ammonium hydroxide is added to form ammonium sulfate in the aqueous solutions. The procedure allows for the determination of gross particulate (sulfate as ammonium sulfate and other particulate), the determination of sulfate as ammonium sulfate from a Method 6 titration or ion chromatography, and subsequently, the determination of non-water-soluble sulfate particulate by the subtraction of sulfate (as ammonium sulfate) from the gross particulate. No direct comparison between this method and the thermogravimetric procedures is

possible because the method corrects for total water-soluble sulfate (including H_2SO_4), whereas the thermogravimetric procedure corrects primarily for H_2SO_4 and associated water. Because this method corrects for total water-soluble sulfate, the particulate results obtained are expected to be equal to or lower than those in samples collected at the same or higher temperature and analyzed thermogravimetrically, regardless of treatment temperature. Considering the overall complexity of the analytical procedure, the precision and accuracy of the method are exceptionally good, as characterized by a mean standard deviation of 0.9 mg/dNm³ and a mean relative standard deviation of 4.8 percent for this set of data.

Modified Method 5

Because of the complexity of the TACB analytical procedure, an alternative methodology incorporating higher sampling temperatures in conjunction with the thermogravimetric analysis seems appropriate. It is recommended that EPA Reference Method 5 sampling and analytical procedures, with the following modifications, be used to determine particulate emissions from sources of this type:

1. Sample collection temperatures should be maintained at no less than 160°C (320°F), and the probe and filter temperature should be monitored directly by thermocouple leads located at the exit of the sample probe and immediately behind the filter frit. Most commercially available stack sampling equipment is capable of maintaining front-half temperatures of 160°C (320°F); however, sampling at temperatures above 205°C (400°F) will probably require equipment modifications to ensure maintenance of the temperature required and the integrity of sampling train components.

2. Prior to the gravimetric analysis, probe rinse and filter fractions should be oven-heated at not less than 160°C (320°F) for 3 hours or more. Prior to weighing, sample fractions should be allowed to cool in a desiccator for approximately 2 hours and weighed according to the constant weight criteria detailed in Reference Method 5.

3. These results also indicate that the combination train (Reference Methods 5 and 8) may not yield accurate results for particulate and H_2SO_4 unless the probes and filter temperatures are considerably higher than 160°C (320°F). Based on the data, this combination train can be used to sample for particulate and SO_2 simultaneously, provided the train is air-purged for at least 15 minutes after testing is completed to remove the SO_2 adsorbed in the IPA.

SECTION 5

QUALITY ASSURANCE

Because the end product of testing is the production of representative emission results, quality assurance is one of the main facets of stack sampling. Quality assurance guidelines provide the detailed procedures and actions necessary for defining and producing acceptable data. Four such documents were used in this test program to ensure the collection of acceptable data and to provide a definition of unacceptable data. The following documents comprise the source-specific test plan prepared by PEDCo and reviewed by the Emission Measurement Branch: the EPA Quality Assurance Handbook Volume III, EPA-600/4-77-027; the PEDCo Environmental Emission Test Quality Assurance Plan; and the PEDCo Environmental Laboratory Quality Assurance Plan. The last two, which are PEDCo's general guideline manuals, define the company's standard operating procedures that are routinely followed by the emission testing and laboratory groups. In addition, data obtained from a similar test program conducted under this task assignment also were utilized to assess the between-source analytical trends of the methods employed.

Appendix F provides more detail on other subjects related to quality assurance (QA) such as QA objective; data reduction;

quality control checks; performance and system audits; preventive maintenance; precision, accuracy, and completeness; corrective action; and quality assurance reports to management.

With regard to this specific test program, the following steps were taken to ensure that the testing and analytical procedures would produce quality data.

- Calibration of field sampling equipment. (Appendix E describes calibration guidelines in more detail.)
- Checks of train configuration and calculations.
- Onsite checks such as leak checks on the sampling train, the pitot tube, and the Orsat line and quality assurance checks of all test equipment prior to use.
- Use of designated analytical equipment and sampling reagents.

Table 5-1 lists the sampling equipment used for particulate testing and the calibration guidelines and limits for this equipment. In addition to the pre- and post-test calibrations, a field audit was performed on the metering consoles used for sampling. PEDCo-constructed critical orifices were used in this audit. Figures 5-1 through 5-4 show an example audit run for each metering console used for testing. Figures 5-5 and 5-6 present additional onsite quality assurance checks of the thermocouple leads for the quad train probe and filter assemblies. Onsite calculation checks were performed to ensure isokinetic sampling rates. Pertinent test data were compared with expected values as an additional validation check.

As a check on the reliability of the thermogravimetric analytical procedure, sets of blank filters and acetone were

TABLE 5-1. FIELD EQUIPMENT CALIBRATION

Equipment	Train	I.D. No.	Calibrated against	Allowable error	Actual error	Within allowable limits	Comments
Meter box	A	FB-3	Wet test meter	Y ±0.02 Y	+ 0.003	✓	
				ΔH @ ±0.15	- 0.09	✓	
				(Y ±0.05 Y post-test)	+ 0.019	✓	
	B	FB-5			+ 0.002	✓	
					+ 0.07	✓	
					+ 0.015	✓	
	C	FB-7			+ 0.006	✓	
					+ 0.04	✓	
					+ 0.011	✓	
	D	FB-2			+ 0.006	✓	
					- 0.07	✓	
					+ 0.009	✓	
Pitot tube	A&B	284	Standard pitot tube	Cp ±0.01	0.0	✓	Visually inspected on site
	C&D	278			0.0	✓	Visually inspected on site
Digital indicator	A&B	125	Millivolt signals	0.5%	+ 0.4%	✓	
	C&D	124			+ 0.3%	✓	
Thermocouple	A&B	203	ASTM-2F	1.5%	+ 0.6%	✓	
	C&D			(±2% saturated)	+ 0.6%	✓	
Orsat analyzed	All	143	Standard gas	±0.5%	- 0.3%	✓	
Impinger thermometer	A	394	ASTM-2F	±2°F			
	B	290			0°F	✓	
	C	285			+ 1°F	✓	
	D	104			- 2°F	✓	
Balance	All	M-1	Type S weights	±0.5 g	+ 0.4 g	✓	
Barometer	All	317	NBS traceable barometer	±0.10 in.Hg (0.20 post-test)	0.00 in.Hg	✓	
Dry gas thermometer	A	FB-3 inlet	ASTM-2F	±5°F	- 3°F	✓	
		FB03 outlet			- 3°F	✓	
	B	FB-5 inlet			+ 4°F	✓	
		FB-5 outlet			- 2°F	✓	
	C	FB-7 inlet			+ 4°F	✓	
		FB-7 outlet			- 4°F	✓	
	D	FB-2 inlet			- 4°F	✓	
		FB-2 outlet			- 2°F	✓	
Probe nozzle	A	1-A	Caliper	Dn ±0.004 in.	0.002	✓	
		2-A			0.001	✓	
	B	1-B			0.001	✓	
		2-B			0.002	✓	
	C	1-C			0.000	✓	
		2-C			0.003	✓	
	D	1-D			0.000	✓	
		2-D			0.003	✓	

DATE: 11/5/82 CLIENT: USEPA

BAROMETRIC PRESSURE (P_{bar}): 29.34 in. Hg METER BOX NO. FB-2

ORIFICE NO. #5 PRETEST γ: .986

ORIFICE K FACTOR: 5.412 x 10^{-4} AUDITOR: R ANTESBERGER

Orifice manometer reading ΔH in H_2O	Dry gas meter reading V_i/V_f ft^3	Temperatures: Ambient T_{ai}/T_{af} °F	Dry gas meter: Inlet T_{ii}/T_{if} °F	Dry gas meter: Outlet T_{oi}/T_{of} °F	Duration of run $\emptyset$ min
2.4	527.200	69	76	64	$15\frac{17}{60}$
	540.400	69	78	66	

Dry gas meter volume V_m ft^3	Average temperatures: Ambient T_a °F	Average temperatures: Dry gas meter T_m °F	$V_{m_{std}}$ ft^3	$V_{m_{act}}$ ft^3	Audit γ	γ deviation %
13.2	69	71	12.95	12.69	0.980	-0.61

$V_{m_{std}}$	$V_{m_{act}}$
$\frac{(17.647)(V_m)(P_{bar} + \Delta H/13.6)}{(T_m + 460)}$	$\frac{(1203)(\emptyset)(K)}{(T_a + 460)^{1/2}} \frac{(P_{bar})}{}$
12.95	12.69

Audit γ	γ deviation, %
$\frac{V_{m_{act}}}{V_{m_{std}}}$	$\frac{(\gamma \text{ audit} - \gamma \text{ pre-test})(100\%)}{(\gamma \text{ audit})}$
0.980	-0.61

Audit γ must be in the range, pre-test γ ± 0.05 γ

Figure 5-1. Audit report dry gas meter (Meter Box FB-2).

DATE: 11/5/82 CLIENT: USEPA

BAROMETRIC PRESSURE (P_{bar}): 29.34 in. Hg METER BOX NO. FB-3

ORIFICE NO. 5 PRETEST γ: 1.006

ORIFICE K FACTOR: 5.412×10^{-4} AUDITOR: Osterhout

Orifice manometer reading ΔH in H_2O	Dry gas meter reading V_i/V_f ft^3	Temperatures: Ambient T_{ai}/T_{af} °F	Dry gas meter: Inlet T_{ii}/T_{if} °F	Dry gas meter: Outlet T_{oi}/T_{of} °F	Duration of run Ø min
2.72	183.700	72	84	77	15:07.9
	196.800	76	85	79	15.132

Vac

20.4

Dry gas meter volume V_m ft^3	Average temperatures: Ambient T_a °F	Average temperatures: Dry gas meter T_m °F	$V_{m_{std}}$ ft^3	$V_{m_{act}}$ ft^3	Audit γ	γ deviation %
13.1	74	81.25	12.617	12.510	.991	-1.51%

$V_{m_{std}}$	$V_{m_{act}}$
$\frac{(17.647)(V_m)(P_{bar} + \Delta H/13.6)}{(T_m + 460)}$	$\frac{(1203)(\ \emptyset\ )(\ K\ )(P_{bar})}{(T_a + 460)^{1/2}}$

Audit γ	γ deviation, %
$\frac{V_{m_{act}}}{V_{m_{std}}}$	$\frac{(\gamma \text{ audit} - \gamma \text{ pre-test})(100\%)}{(\gamma \text{ audit})}$

Audit γ must be in the range, pre-test $\gamma \pm 0.05\ \gamma$

Figure 5-2. Audit report dry gas meter (Meter Box FB-3).

DATE: 11/5/82 CLIENT: USEPA

BAROMETRIC PRESSURE (P_{bar}): 29.34 in. Hg METER BOX NO. FB-5

ORIFICE NO. 11 PRETEST γ: .988

ORIFICE K FACTOR: 4.890×10^{-4} AUDITOR: [illegible]

Orifice manometer reading ΔH in H_2O	Dry gas meter reading V_i/V_f ft^3	Temperatures: Ambient T_{ai}/T_{af} °F	Dry gas meter: Inlet T_{ii}/T_{if} °F	Dry gas meter: Outlet T_{oi}/T_{of} °F	Duration of run Ø min
2.02	772.000	72	84	78	15:00.9
	784.800	76	86	79	15.015

Vac 21.4

Dry gas meter volume V_m ft^3	Average temperatures: Ambient T_a °F	Average temperatures: Dry gas meter T_m °F	$V_{m_{std}}$ ft^3	$V_{m_{act}}$ ft^3	Audit γ	γ deviation %
12.000	74	82	11.521	11.215	.973	-1.5%

$V_{m_{std}}$	$V_{m_{act}}$
$\frac{(17.647)(V_m)(P_{bar} + \Delta H/13.6)}{(T_m + 460)}$	$\frac{(1203)(\text{Ø})(K)(P_{bar})}{(T_a + 460)^{1/2}}$

Audit γ	γ deviation, %
$\frac{V_{m_{act}}}{V_{m_{std}}}$	$\frac{(\gamma \text{ audit} - \gamma \text{ pre-test})(100\%)}{(\gamma \text{ audit})}$

Audit γ must be in the range, pre-test $\gamma \pm 0.05\ \gamma$

Figure 5-3. Audit report dry gas meter (Meter Box FB-5).

DATE: 11/5/82 CLIENT: USEPA

BAROMETRIC PRESSURE (P_{bar}): 29.34 in. Hg METER BOX NO. FB-7

ORIFICE NO. #10 PRETEST γ: 1.001

ORIFICE K FACTOR: 4.798×10^{-4} AUDITOR: R. ANTESBERGER

Orifice manometer reading ΔH in H_2O	Dry gas meter reading V_i/V_f ft^3	Temperatures: Ambient T_{ai}/T_{af} °F	Dry gas meter: Inlet T_{ii}/T_{if} °F	Dry gas meter: Outlet T_{oi}/T_{of} °F	Duration of run $\emptyset$ min
1.8	474.900	69	74	70	15 $\frac{SU}{GD}$
	487.000	69	76	72	

Dry gas meter volume V_m ft^3	Average temperatures: Ambient T_a °F	Average temperatures: Dry gas meter T_m °F	$V_{m_{std}}$ ft^3	$V_{m_{act}}$ ft^3	Audit γ	γ deviation %
12.1	69	73	11.807	11.707	0.992	-0.91

$V_{m_{std}}$	$V_{m_{act}}$
$\frac{(17.647)(V_m)(P_{bar} + \Delta H/13.6)}{(T_m + 460)}$	$\frac{(1203)(\emptyset)(K)(P_{bar})}{(T_a + 460)^{1/2}}$
11.807	11.707

Audit γ	γ deviation, %
$\frac{V_{m_{act}}}{V_{m_{std}}}$	$\frac{(\gamma \text{ audit} - \gamma \text{ pre-test})(100\%)}{(\gamma \text{ audit})}$
0.992	-0.91

Audit γ must be in the range, pre-test γ ± 0.05 γ

Figure 5-4. Audit report dry gas meter (Meter Box FB-7).

Date 11/5/88 Indicator No. #124 Operator R. Autesberger

Test Point No.	Millivolt signal*	Equivalent temperature, °F*	Digital indicator temperature reading, °F	Difference, %
1		32.0	29.0	-0.61
2		102.2	99.4	-0.50
3		451.1	450.3	-0.09
4		1127.0	1127.5	+0.09

Percent difference must be less than or equal to 0.5%.

Percent difference:

$$\frac{(\text{Equivalent temperature °R} - \text{Digital indicator temperature reading °R})(100\%)}{(\text{Equivalent temperature °R})}$$

Where °R = °F + 460°F

* These values are to be obtained from the calibration data sheet for the calibration device.

Figure 5-5. Thermocouple digital indicator audit data sheet (Indicator 124).

Date 11/5/82 Indicator No. 125 Operator Osterhout

Test Point No.	Millivolt signal*	Equivalent temperature, °F*	Digital indicator temperature reading, °F	Difference, %
1		32.0	35.2	+0.65
2		102.2	104.8	+0.46
3		451.1	453.8	+0.30
4		1127	1132.6	+0.35

Percent difference must be less than or equal to 0.5%.

Percent difference:

$$\frac{(\text{Equivalent temperature °R} - \text{Digital indicator temperature reading °R})(100\%)}{(\text{Equivalent temperature °R})}$$

Where °R = °F + 460°F

* These values are to be obtained from the calibration data sheet for the calibration device.

Figure 5-6. Thermocouple digital indicator audit data sheet (Indicator 125).

resubmitted to the laboratory for blank analysis. Table 5-2 presents example results of the thermogravimetric blank analysis. The reported net weights are reasonable (considering the number of times each sample fraction was handled) and showed good analytical techniques.

TABLE 5-2. EXAMPLE OF A THERMOGRAVIMETRIC ANALYSIS OF FILTER AND ACETONE BLANKS (milligrams)

Sample	Lab ID	Tare weight	Ambient temp.		Weight after conditioning at indicated temperature					
					160°C		232°C		316°C	
			Weight	Net	Weight	Net	Weight	Net	Weight	Net
Filter	CQ738	365.2	365.8	+0.6	365.6	+0.4	365.4	+0.2	365.6	+0.4
Acetone[a]	CQ769	107,964.5	107,973.8	+9.3	107,969.6	+5.1	107,965.4	+0.9	107,963.9	-0.6

[a]Initial volume, 412 ml.

Audit solutions prepared by the EPA were used to check the analytical procedures and reagents for SO_2 analysis. Table 5-3 presents the results of this analytical audit. Table 5-4 summarizes the reagent blank analysis performed on the isopropanol alcohol (IPA) and hydrogen peroxide used for sampling.

As an assessment of the reliability of the procedures used to determine the non-water-soluble sulfate particulate concentration, blank filter and deionized distilled water samples were analyzed along with each set of field samples. Table 5-5 presents example blank results of this check method. Table 5-6 summarizes blank analytical data for the ion chromatography analyses performed on rinse and filter samples.

TABLE 5-3. AUDIT REPORT SO_2 ANALYSIS

Plant USEPA - PHILLIPS PETRO. **PN Number** 3530-14

Date samples received 11-18-83 **Date analyzed** 12-6-83

Samples analyzed by B. PELSOR

Reviewed by T. Wagner **Date of Review** 12-15-83

Sample Number	mg SO_2/dscm Determined	Source of Sample	Accepted Value	% Difference
S0282 5264 CR317	1932.2	T. WAGNER	1906.5	+1.3
S0282 #2673 CR792	1406.5	T. WAGNER	1410.8	-0.3
S0282 #8512 CR793	2291.4	T. WAGNER	2325.9	-1.5

TABLE 5-4. REAGENT BLANK ANALYSIS FOR IPA AND H_2O_2 (mg of $SO_4^=$)

Sample type	Lab ID No.	As SO_2	As H_2SO_4
10% H_2O_2	CQ819	<0.2	-
80% IPA	CQ860	-	<0.1

TABLE 5-5. BLANK ANALYTICAL DATA FOR NON-WATER-SOLUBLE SULFATE ANALYSES

Sample type	Lab ID	Net particulate weight including ammonium sulfate, mg	$C_{SO_4^=}$, mg/liter	Volume evaporated,[a] ml	NWSSP, mg
Filter	CQ871	-10.8	3.79	235	-12.0
Filter	CR295	+ 5.4	10.6	235	+ 2.0
Filter	CR296	- 9.0	4.05	235	-10.3
Filter	CR297	-11.2	3.25	235	-12.3
Filter	CR298	1.9	5.35	235	+ 0.2
Probe rinse (water)	CQ882	1.2	0.30	370	+ 1.0

[a]15 ml removed for IC analysis.

TABLE 5-6. BLANK ANALYTICAL DATA FOR THE ION CHROMATOGRAPHY ANALYSES

Sample type	Lab ID	C_{SO_4}, mg/liter	Volume, ml	$SO_4^=$, mg
Rinse (acetone)	CQ769	<1.00	250	<0.2
Filter	CQ738	4.39	250	1.1
Filter	CR292	1.29	250	0.3
Filter	CR293	1.26	250	0.3
Filter	CR294	1.30	250	0.3

Three of the five filter blanks were considered suspect because of their relatively large negative values. Every possible check was performed to locate the discrepancies, and no specific cause was found. When the tare and final weights of the sample beakers were rechecked, no difference was noted. A second set of filters was analyzed by M5W, and NWSSP values of +0.4, -1.1, +0.4, and 1.7 mg were obtained. All of these values are acceptable, and they correspond to the values obtained for Samples CR295 and CR298 reported in Table 5-5.

The IC was calibrated daily with standard solutions of 1.0, 2.5, 5.0, 10.0, and 15.0 mg/liter. A standard reference solution (SRS) at 8.0 ppm was analyzed at the beginning, the end, and after every 10 samples during an analysis day. If the measured SRS value was not within ±5 percent of the theoretical value, the previous 10 samples were reanalyzed after the instrument was recalibrated. Ten percent of the samples were analyzed in duplicate, and these samples agreed within ±5 percent.

The sampling equipment, reagents, and analytical procedures for this test series were in compliance with all necessary guidelines set forth for accurate test results as described in Volume III of the Quality Assurance Handbook.*

---

*Quality Assurance Handbook for Air Pollution Measurement Systems, Volume III, EPA-600/4-77-207b, August 1977.

REFERENCES

1. Mitchell, W. J., and M. R. Midgett. A Means to Evaluate the Performance of Stationary Source Test Methods. Environmental Science and Technology, 10:85-88, 1976.

2. Oldaker, G. B. Condensible Particulate and Its Impacts on Particulate Measurements. Draft Report. Prepared under EPA Contract No. 68-01-4148, Task No. 69. May 1980.

3. Peters, E. T., and J. W. Adams. Sulfur Dioxide Interaction With Filters Used for Method 5 Stack Sampling. In: Workshop Proceedings on Primary Sulfate Emissions From Combustion Sources, Volume I - Measurement Technology. EPA-600/9/78-020a, 1978. pp. 199-202.

4. Cushing, K. W. Particulate Sampling in Process Streams in the Presence of Sulfur Dioxide. In: Workshop Proceedings on Primary Sulfate Emissions From Combustion Sources, Volume I - Measurement Technology. EPA-600/9-78-020a, 1978. pp. 202-227.

5. PEDCo Environmental, Inc. Comparative Evaluation of EPA Methods 5 and 17. Draft Report. Prepared under EPA Contract No. 68-02-3431, Task Nos. 88, 103, and 163. February 1983.

6. PEDCo Environmental, Inc. Method Development and Testing for FCCU Regenerators. Final Report. Prepared under EPA Contact No. 68-02-3546, Task Nos. 14 and 20. February 1984.

APPENDIX A

COMPUTER PRINTOUTS AND EXAMPLE CALCULATIONS

Actual filter/probe temperatures are recorded on the field data sheets in Appendix B.

FIELD DATA

PLANT	PHILLIPS SWEENY	DATE	11/09/82
SAMPLING LOCATION	FCCU STACK	RUN NUMBER	1A-M5
SAMPLE TYPE	M5	PROBE LENGTH & TYPE	6' GLASS
OPERATOR	OSTERHOUT	NOZZLE : I.D.	.222
AMBIENT TEMP.(DEG.F)	80.	ASSUMED MOISTURE	15.0
BAR.PRESS.(IN.HG)	30.25	SAMPLE BOX NUMBER	
STATIC PRESS.(IN.H2O)	-1.38	METER BOX NUMBER	F83
FILTER NUMBER(S)	3450168	METER HEAD DIFF.	2.00
STACK INSIDE DIM.(IN)	108.00 .00		
PITOT TUBE COEFF.	.84	PROBE HEATER SETTING	250.
THERM. NO.		HEATER BOX SETTING	250.
LEAKAGE	.012 CFM @ 10.0 IN.HG		
METER CALIB. FACTOR	1.006		

READ & RECORD DATA EVERY 10.0 MINUTES

TRAVERSE POINT NO.	SAMPLE TIME (MIN.)	CLOCK TIME (24-HR CLOCK)	GAS METER READING (CU.FT.)	VELOCITY HEAD (IN.H2O)	ORIFICE PRESSURE DIFFERENTIAL (IN.H2O) DESIRED	ORIFICE PRESSURE DIFFERENTIAL (IN.H2O) ACTUAL	STACK TEMP (DEG.F)	DRY GAS METER TEMP (DEG.F) INLET	DRY GAS METER TEMP (DEG.F) OUTLET	PUMP VACUUM (IN.HG)	SAMPLE BOX TEMP (DEG.F)	IMPINGER TEMP (DEG.F)
INIT	0	1157	198.089									
	10.0	0	206.850	2.200	2.97	2.97	416.	79.	77.	5.3	0.	82.
	20.0	0	215.640	2.200	2.98	2.98	416.	82.	77.	6.2	0.	0.
	30.0	0	224.320	2.200	2.99	2.99	416.	86.	78.	5.7	0.	104.
	40.0	0	232.950	2.150	2.95	2.95	415.	87.	78.	5.6	0.	0.
	50.0	0	241.600	2.200	3.01	3.01	415.	87.	78.	6.7	0.	97.
	60.0	0	250.340	2.200	3.01	3.01	415.	87.	79.	7.4	0.	84.
	70.0	0	259.050	2.200	3.02	3.02	415.	89.	79.	7.8	0.	82.
	80.0	0	267.620	2.150	2.96	2.96	415.	90.	79.	8.0	0.	80.
	90.0	0	276.260	2.200	3.02	3.02	415.	89.	79.	8.2	0.	81.
	100.0	0	284.900	2.150	2.96	2.96	414.	89.	79.	8.2	0.	0.
	110.0	0	293.460	2.150	2.98	2.98	415.	89.	79.	8.5	0.	84.
	120.0	1357	302.228	2.200	3.05	3.05	414.	89.	79.	9.1	0.	81.
TOTALS	120.0		104.139									
AVERAGE					2.99	2.99	415.	87.	78.	7.2	0.	65.

PARTICULATE FIELD DATA & RESULTS TABULATION

PLANT- NAME AND ADDRESS — TEST TEAM LEADER

PHILLIPS SWEENY — OSTERHOUT

TEST 1A-M5 FCCU STACK

		ENGLISH UNITS	METRIC UNITS
TEST DATE		11/09/82	11/09/82
TB	TIME-START	1157	1157
TF	TIME-FINISH	1357	1357
TT	NET TIME OF TEST, MIN.	120.0	120.0
NP	NET SAMPLING POINTS	12	12
Y	METER CALIBRATION FACTOR	1.006	1.006
DN	SAMPLING NOZZLE DIAMETER	.222 IN	5.6 MM
CP	PITOT TUBE COEFFICIENT	.84	.84
PM	AVERAGE ORIFICE PRESSURE DROP	2.99 IN-H2O	76.0 MM-H2O
VM	VOLUME OF DRY GAS SAMPLED AT METER CONDITIONS	104.139 CU-FT	2.949 CU-M
TM	AVERAGE GAS METER TEMP	82.7 F	28.1 C
VMSTD	VOLUME OF DRY GAS SAMPLED AT STANDARD CONDITIONS*	103.806 SCF	2.939 SCM
VLC	TOTAL H2O COLLECTED IN IMPINGERS AND SILICA GEL,ML.	223.5	223.5
VWC	VOLUME OF WATER VAPOR AT STANDARD CONDITIONS*	10.520 SCF	.298 SCM
BWO	PERCENT MOISTURE BY VOLUME	9.20	9.20
FMD	MOLE FRACTION DRY GAS	.908	.908
PCO2	PERCENT CO2 BY VOL., DRY	14.40	14.40
PO2	PERCENT O2 BY VOL., DRY	2.70	2.70
PCO	PERCENT CO BY VOL., DRY	.00	.00
PN2	PERCENT N2 BY VOL., DRY	82.90	82.90
MD	MOLECULAR WT-DRY STACK GAS	30.41	30.41
MWS	MOLECULAR WT-STACK GAS	29.27	29.27

PB	BAROMETRIC PRESSURE	30.25	IN-HG	768.35	MM-HG
PSI	STATIC PRES OF STACK GAS	-1.38	IN-H2O	-35.05	MM-H2O
PS	STACK PRES, ABS.	30.15	IN-HG	765.77	MM-HG
TS	AVERAGE STACK TEMP	415.	F	213.	C
VS	AVG STACK GAS VELOCITY	105.7	FPS	32.2	MPS
AS	STACK AREA	9161.	SQ-IN	5.910	SQ-M
QSSTD	STACK FLOW RATE, DRY*	13358920.	SCFH	378285.	SCMH
QS	ACTUAL STACK FLOW RATE	24199532.	ACFH	685258.	ACMH
ISO	PERCENT ISOKINETIC	92.0		92.0	
MN	FILTERABLE-AMBIENT MG. EPA 5	224.6		224.6	
CS	FILTERABLE-AMBIENT	.0334	GR/DSCF*	76.416	MG/DSCM
MN	FILTERABLE-160 MG. EPA 5	108.0		108.0	
CS	FILTERABLE-160	.0161	GR/DSCF*	36.745	MG/DSCM
MN	FILTERABLE-232 MG. EPA 5	92.3		92.3	
CS	FILTERABLE-232	.0137	GR/DSCF*	31.403	MG/DSCM
MN	FILTERABLE-315 MG. EPA 5	80.0		80.0	
CS	FILTERABLE-315	.0119	GR/DSCF*	27.218	MG/DSCM

* 68 DEG F, 29.92 IN.HG.

EXAMPLE PARTICULATE CALCULATIONS TEST NO. 1A-M5

FCCU STACK

VOLUME OF DRY GAS SAMPLED AT STANDARD CONDITIONS

VMSTD = (17.647 * VM * Y * (PB + PM / 13.6)) / (TM + 460.)

$$VMSTD = \frac{17.647 * 104.139 * 1.006 * (30.25 + 2.992 / 13.6)}{(83. + 460.)} = 103.806 \text{ DSCF}$$

VOLUME OF WATER VAPOR AT STANDARD CONDITIONS

VWC = .04707 * VLC

VWC = .04707 * 223. = 10.52 SCF

PERCENT MOISTURE IN STACK GAS

BWO = (100. * VWC) / (VMSTD + VWC)

$$BWO = \frac{100. * 10.52}{103.806 + 10.52} = 9.20 \text{ PERCENT}$$

MOLE FRACTION OF DRY STACK GAS

FMD = (100. - BWO) / 100.

$$FMD = \frac{100. - 9.2}{100.} = .908$$

AVERAGE MOLECULAR WEIGHT OF DRY STACK GAS

MD = (PCO2 * .44) + (PO2 * .32) + (PN2 + PCO) * .28

MD = (14.40*44/100) + (2.7*32/100) + ((82.9+ .0) * 28/100 = 30.41

MOLECULAR WEIGHT OF STACK GAS

MWS = MD * (1. - (BWO/100)) + 18. * (BWO/100)

MWS = 30.41* (1. -(9.20/100)) + 18. * (9.20/100) = 29.27

STACK GAS VELOCITY AT STACK CONDITIONS

DELP = SUM. OF THE SQRT(VH * (TS + 460.))

VS = 85.49 * CP * DELP / (SQRT(MWS * PS) * PNTS)

VS = 85.49 * .84 * 524.517 / (SQRT(29.27 * 30.15) * 12. = 105.66 FPS

STACK GAS VOLUMETRIC FLOW AT STACK CONDITIONS

QS = VS * AS * 3600/144

QS = 105.66 * 9161. 3600/144 = 24199532. ACFH

STACK GAS VOLUMETRIC FLOW AT STANDARD CONDITIONS

QSSTD = 17.647 * QS * PS * (1. - (BWO/100)) / (TS + 460.)

$$QSSTD = \frac{17.647 * 24199532. * 30.15 * (1. - (9.20/100))}{(415. + 460.)} = 13358920. \text{ SCFH}$$

PERCENT ISOKINETIC

ISO = (305.58*(TS+460.))*((0.002669*VLC)+(VM*Y*(PB+(PM/13.6))/(TM+460.)))/(TT*VS*PS*DN*DN)

$$ISO = \frac{(305.58*(415.+460.))*((0.002669* 223.)+(104.139*1.006*(30.25+(2.992/13.6))/(83.+460.)))}{120. * 105.66 * 30.15 * .222 * .222} = 91.96 \text{ PERCENT}$$

PARTICULATE LOADING -- EPA METHOD 5 (AT STANDARD CONDITIONS)

CS = 0.001 * MN * 15.43 / VMSTD

CS = 0.001 * 224.6 * 15.43 / 103.806 = .0334 GR/DSCF

FIELD DATA

PLANT	PHILLIPS SWEENY	DATE	11/09/82
SAMPLING LOCATION	FCCU STACK	RUN NUMBER	18-M5
SAMPLE TYPE	M5	PROBE LENGTH & TYPE	6' GLASS
OPERATOR	OSTERHOUT	NOZZLE : I.D.	.221
AMBIENT TEMP.(DEG.F)	80.	ASSUMED MOISTURE	15.0
BAR.PRESS.(IN.HG)	30.25	SAMPLE BOX NUMBER	
STATIC PRESS.(IN.H2O)	-1.38	METER BOX NUMBER	FB5
FILTER NUMBER(S)	3450177	METER HEAD DIFF.	1.95
STACK INSIDE DIM.(IN)	108.00 .00		
PITOT TUBE COEFF.	.84	PROBE HEATER SETTING	250.
THERM. NO.		HEATER BOX SETTING	250.
LEAKAGE	.018 CFM @ 14.0 IN.HG		
METER CALIB. FACTOR	.988		

READ & RECORD DATA EVERY 10.0 MINUTES

TRAVERSE POINT NO.	SAMPLE TIME (MIN.)	CLOCK TIME (24-HR CLOCK)	GAS METER READING (CU.FT.)	VELOCITY HEAD (IN.H2O)	ORIFICE PRESSURE DIFFERENTIAL (IN.H2O) DESIRED	ORIFICE PRESSURE DIFFERENTIAL (IN.H2O) ACTUAL	STACK TEMP (DEG.F)	DRY GAS METER TEMP (DEG.F) INLET	DRY GAS METER TEMP (DEG.F) OUTLET	PUMP VACUUM (IN.HG)	SAMPLE BOX TEMP (DEG.F)	IMPINGER TEMP (DEG.F)
INIT	0	1158	808.887									
	10.0	0	818.210	2.200	2.97	2.97	416.	82.	81.	8.1	0.	82.
	20.0	0	827.670	2.200	2.98	2.98	416.	83.	82.	8.8	0.	0.
	30.0	0	837.000	2.200	2.99	2.99	416.	92.	85.	8.4	0.	120.
	40.0	0	846.010	2.150	2.95	2.95	415.	95.	86.	8.3	0.	0.
	50.0	0	855.200	2.200	3.01	3.01	415.	97.	85.	9.8	0.	104.
	60.0	0	864.500	2.200	3.01	3.01	415.	97.	86.	11.0	0.	91.
	70.0	0	873.770	2.200	3.02	3.02	415.	99.	87.	11.3	0.	86.
	80.0	0	883.050	2.150	2.96	2.96	415.	99.	87.	11.7	0.	82.
	90.0	0	892.340	2.200	3.02	3.02	415.	99.	89.	12.0	0.	83.
	100.0	0	901.620	2.150	2.96	2.96	414.	99.	89.	12.0	0.	0.
	110.0	0	910.910	2.150	2.98	2.98	415.	99.	89.	12.3	0.	86.
	120.0	1358	920.343	2.200	3.05	3.05	414.	97.	89.	13.2	0.	77.
TOTALS	120.0		111.456									
AVERAGE					2.99	2.99	415.	95.	86.	10.6	0.	68.

PARTICULATE FIELD DATA & RESULTS TABULATION

PLANT- NAME AND ADDRESS — TEST TEAM LEADER

PHILLIPS SWEENY — OSTERHOUT

TEST 1B-M5 FCCU STACK

		ENGLISH UNITS	METRIC UNITS
TEST DATE		11/09/82	11/09/82
TB	TIME-START	1158	1158
TF	TIME-FINISH	1358	1358
TT	NET TIME OF TEST, MIN.	120.0	120.0
NP	NET SAMPLING POINTS	12	12
Y	METER CALIBRATION FACTOR	.988	.988
DN	SAMPLING NOZZLE DIAMETER	.221 IN	5.6 MM
CP	PITOT TUBE COEFFICIENT	.84	.84
PM	AVERAGE ORIFICE PRESSURE DROP	2.99 IN-H2O	76.0 MM-H2O
VM	VOLUME OF DRY GAS SAMPLED AT METER CONDITIONS	111.456 CU-FT	3.156 CU-M
TM	AVERAGE GAS METER TEMP	90.5 F	32.5 C
VMSTD	VOLUME OF DRY GAS SAMPLED AT STANDARD CONDITIONS*	107.551 SCF	3.045 SCM
VLC	TOTAL H2O COLLECTED IN IMPINGERS AND SILICA GEL,ML.	223.0	223.0
VWC	VOLUME OF WATER VAPOR AT STANDARD CONDITIONS*	10.497 SCF	.297 SCM
BWO	PERCENT MOISTURE BY VOLUME	8.89	8.89
FMD	MOLE FRACTION DRY GAS	.911	.911
PCO2	PERCENT CO2 BY VOL., DRY	14.40	14.40
PO2	PERCENT O2 BY VOL., DRY	2.70	2.70
PCO	PERCENT CO BY VOL., DRY	.00	.00
PN2	PERCENT N2 BY VOL., DRY	82.90	82.90
MD	MOLECULAR WT-DRY STACK GAS	30.41	30.41
MWS	MOLECULAR WT-STACK GAS	29.31	29.31

PB	BAROMETRIC PRESSURE	30.25	IN-HG	768.35	MM-HG
PSI	STATIC PRES OF STACK GAS	-1.38	IN-H2O	-35.05	MM-H2O
PS	STACK PRES, ABS.	30.15	IN-HG	765.77	MM-HG
TS	AVERAGE STACK TEMP	415.	F	213.	C
VS	AVG STACK GAS VELOCITY	105.6	FPS	32.2	MPS
AS	STACK AREA	9161.	SQ-IN	5.910	SQ-M
QSSTD	STACK FLOW RATE, DRY*	13395732.	SCFH	379327.	SCMH
QS	ACTUAL STACK FLOW RATE	24183640.	ACFH	684808.	ACMH
ISO	PERCENT ISOKINETIC	95.9		95.9	
MN	FILTERABLE-AMBIENT MG. EPA 5	221.0		221.0	
CS	FILTERABLE-AMBIENT	.0317	GR/DSCF*	72.573	MG/DSCM
MN	FILTERABLE-160 MG. EPA 5	105.0		105.0	
CS	FILTERABLE-160	.0151	GR/DSCF*	34.480	MG/DSCM
MN	FILTERABLE-232 MG. EPA 5	91.0		91.0	
CS	FILTERABLE-232	.0131	GR/DSCF*	29.883	MG/DSCM
MN	FILTERABLE-315 MG. EPA 5	80.5		80.5	
CS	FILTERABLE-315	.0115	GR/DSCF*	26.435	MG/DSCM

* 68 DEG F, 29.92 IN.HG.

EXAMPLE PARTICULATE CALCULATIONS TEST NO. 18-M5

FCCU STACK

VOLUME OF DRY GAS SAMPLED AT STANDARD CONDITIONS

VMSTD = (17.647 * VM * Y * (PB + PM / 13.6)) / (TM + 460.)

$$VMSTD = \frac{17.647 * 111.456 * .988 * (30.25 + 2.992 / 13.6)}{(91. + 460.)} = 107.551 \text{ DSCF}$$

VOLUME OF WATER VAPOR AT STANDARD CONDITIONS

VWC = .04707 * VLC

VWC = .04707 * 223. = 10.50 SCF

PERCENT MOISTURE IN STACK GAS

BWO = (100. * VWC) / (VMSTD + VWC)

$$BWO = \frac{100. * 10.50}{107.551 + 10.50} = 8.89 \text{ PERCENT}$$

MOLE FRACTION OF DRY STACK GAS

FMD = (100. - BWO) / 100.

$$FMD = \frac{100. - 8.9}{100.} = .911$$

AVERAGE MOLECULAR WEIGHT OF DRY STACK GAS

MD = (PCO2 * .44) + (PO2 * .32) + (PN2 + PCO) * .28

MD = (14.40*44/100) + (2.7*32/100) + ((82.9+ .0) * 28/100 = 30.41

MOLECULAR WEIGHT OF STACK GAS

MWS = MD * (1. - (BWO/100)) + 18. * (BWO/100)

MWS = 30.41* (1. -(8.89/100)) + 18. * (8.89/100) = 29.31

STACK GAS VELOCITY AT STACK CONDITIONS

DELP = SUM. OF THE SQRT(VH * (TS + 460.))

VS = 85.49 * CP * DELP / (SQRT(MWS * PS) * PNTS)

VS = 85.49 * .84 * 524.517 / (SQRT(29.31 * 30.15) * 12. = 105.60 FPS

STACK GAS VOLUMETRIC FLOW AT STACK CONDITIONS

QS = VS * AS * 3600/144

QS = 105.60 * 9161. 3600/144 = 24183640. ACFM

STACK GAS VOLUMETRIC FLOW AT STANDARD CONDITIONS

QSSTD = 17.647 * QS * PS * (1. - (BWO/100)) / (TS + 460.)

$$QSSTD = \frac{17.647 * 24183640. * 30.15 * (1. - (8.89/100))}{(415. + 460.)} = 13395732. \text{ SCFM}$$

PERCENT ISOKINETIC

ISO = (305.58*(TS+460.))*((0.002669*VLC)+(VM*Y*(PB+(PM/13.6))/(TM+460.)))/(TT*VS*PS*DN*DN)

$$ISO = \frac{(305.58*(415.+460.))*((0.002669* 223.)+(111.456* .988*(30.25+(2.992/13.6))/(91.+460.)))}{120. * 105.60 * 30.15 * .221 * .221} = 95.88 \text{ PERCENT}$$

PARTICULATE LOADING -- EPA METHOD 5 (AT STANDARD CONDITIONS)

CS = 0.001 * MN * 15.43 / VMSTD

CS = 0.001 * 221.0 * 15.43 / 107.551 = .0317 GR/DSCF

FIELD DATA

PLANT	PHILLIPS PETRO SWEENY	DATE	11/09/82
SAMPLING LOCATION	FCC STACK	RUN NUMBER	1CM5W
SAMPLE TYPE	M5W	PROBE LENGTH & TYPE	6 FT GLASS
OPERATOR	PHILLIPS	NOZZLE : I.D.	.224
AMBIENT TEMP.(DEG.F)	76.	ASSUMED MOISTURE	15.0
BAR.PRESS.(IN.HG)	30.25	SAMPLE BOX NUMBER	
STATIC PRESS.(IN.H2O)	-1.38	METER BOX NUMBER	FB7
FILTER NUMBER(S)	3450170	METER HEAD DIFF.	1.71
STACK INSIDE DIM.(IN)	108.00 .00		
PITOT TUBE COEFF.	.84	PROBE HEATER SETTING	250.
THERM. NO.		HEATER BOX SETTING	250.
LEAKAGE	.000 CFM @ 6.2 IN.HG		
METER CALIB. FACTOR	1.001		

READ & RECORD DATA EVERY 10.0 MINUTES

TRAVERSE POINT NO.	SAMPLE TIME (MIN.)	CLOCK TIME (24-HR CLOCK)	GAS METER READING (CU.FT.)	VELOCITY HEAD (IN.H2O)	ORIFICE PRESSURE DIFFERENTIAL (IN.H2O) DESIRED	ORIFICE PRESSURE DIFFERENTIAL (IN.H2O) ACTUAL	STACK TEMP (DEG.F)	DRY GAS METER TEMP (DEG.F) INLET	DRY GAS METER TEMP (DEG.F) OUTLET	PUMP VACUUM (IN.HG)	SAMPLE BOX TEMP (DEG.F)	IMPINGER TEMP (DEG.F)
INIT	0	1158	587.157									
	10.0	1208	597.000	2.500	3.10	3.10	417.	81.	80.	4.9	0.	76.
	20.0	1218	606.660	2.400	3.00	3.00	416.	84.	80.	4.8	0.	92.
	30.0	1228	616.350	2.400	3.00	3.00	416.	87.	80.	4.9	0.	96.
	40.0	1238	626.060	2.400	3.00	3.00	416.	90.	82.	4.9	0.	96.
	50.0	1248	635.780	2.400	3.00	3.00	416.	90.	82.	4.9	0.	94.
	60.0	1258	645.440	2.400	3.00	3.00	416.	92.	83.	4.9	0.	90.
	70.0	1308	655.130	2.400	3.10	3.10	415.	92.	84.	4.9	0.	84.
	80.0	1318	664.790	2.400	3.10	3.10	415.	92.	84.	5.0	0.	88.
	90.0	1328	674.490	2.400	3.00	3.00	416.	92.	84.	5.0	0.	82.
	100.0	1338	684.020	2.400	3.10	3.10	415.	93.	85.	5.1	0.	78.
	110.0	1348	693.720	2.400	3.10	3.10	415.	93.	85.	5.3	0.	80.
	120.0	1358	703.297	2.400	3.10	3.10	415.	93.	85.	5.8	0.	81.
TOTALS	120.0		116.140									
AVERAGE					3.05	3.05	416.	90.	83.	5.0	0.	86.

PARTICULATE FIELD DATA & RESULTS TABULATION

PLANT- NAME AND ADDRESS — TEST TEAM LEADER

PHILLIPS PETRO SWEENY — PHILLIPS

TEST 1CM5W FCC STACK

		ENGLISH UNITS	METRIC UNITS
TEST DATE		11/09/82	11/09/82
TB	TIME-START	1158	1158
TF	TIME-FINISH	1358	1358
TT	NET TIME OF TEST, MIN.	120.0	120.0
NP	NET SAMPLING POINTS	12	12
Y	METER CALIBRATION FACTOR	1.001	1.001
DN	SAMPLING NOZZLE DIAMETER	.224 IN	5.7 MM
CP	PITOT TUBE COEFFICIENT	.84	.84
PM	AVERAGE ORIFICE PRESSURE DROP	3.05 IN-H2O	77.5 MM-H2O
VM	VOLUME OF DRY GAS SAMPLED AT METER CONDITIONS	116.140 CU-FT	3.289 CU-M
TM	AVERAGE GAS METER TEMP	86.4 F	30.2 C
VMSTD	VOLUME OF DRY GAS SAMPLED AT STANDARD CONDITIONS*	114.427 SCF	3.240 SCM
VLC	TOTAL H2O COLLECTED IN IMPINGERS AND SILICA GEL,ML.	310.7	310.7
VWC	VOLUME OF WATER VAPOR AT STANDARD CONDITIONS*	14.625 SCF	.414 SCM
BWO	PERCENT MOISTURE BY VOLUME	11.33	11.33
FMD	MOLE FRACTION DRY GAS	.887	.887
PCO2	PERCENT CO2 BY VOL., DRY	14.40	14.40
PO2	PERCENT O2 BY VOL., DRY	2.70	2.70
PCO	PERCENT CO BY VOL., DRY	.00	.00
PN2	PERCENT N2 BY VOL., DRY	82.90	82.90
MD	MOLECULAR WT-DRY STACK GAS	30.41	30.41
MWS	MOLECULAR WT-STACK GAS	29.01	29.01

PB	BAROMETRIC PRESSURE	30.25	IN-HG	768.35	MM-HG
PSI	STATIC PRES OF STACK GAS	-1.38	IN-H2O	-35.05	MM-H2O
PS	STACK PRES, ABS.	30.15	IN-HG	765.77	MM-HG
TS	AVERAGE STACK TEMP	416.	F	213.	C
VS	AVG STACK GAS VELOCITY	111.5	FPS	34.0	MPS
AS	STACK AREA	9161.	SQ-IN	5.910	SQ-M
QSSTD	STACK FLOW RATE, DRY*	13758892.	SCFH	389611.	SCMH
QS	ACTUAL STACK FLOW RATE	25539960.	ACFH	723215.	ACMH
ISO	PERCENT ISOKINETIC	96.7		96.7	

* 68 DEG F, 29.92 IN.HG.

EXAMPLE PARTICULATE CALCULATIONS TEST NO. 1CM5W

FCC STACK

VOLUME OF DRY GAS SAMPLED AT STANDARD CONDITIONS

VMSTD = (17.647 * VM * Y * (PB + PM / 13.6)) / (TM + 460.)

$$VMSTD = \frac{17.647 * 116.140 * 1.001 * (30.25 + 3.050 / 13.6)}{(86. + 460.)} = 114.427 \text{ DSCF}$$

VOLUME OF WATER VAPOR AT STANDARD CONDITIONS

VWC = .04707 * VLC

VWC = .04707 * 311. = 14.62 SCF

PERCENT MOISTURE IN STACK GAS

BWO = (100. * VWC) / (VMSTD + VWC)

$$BWO = \frac{100. * 14.62}{114.427 + 14.62} = 11.33 \text{ PERCENT}$$

MOLE FRACTION OF DRY STACK GAS

FMD = (100. - BWO) / 100.

$$FMD = \frac{100. - 11.3}{100.} = .887$$

AVERAGE MOLECULAR WEIGHT OF DRY STACK GAS

MD = (PCO2 * .44) + (PO2 * .32) + (PN2 + PCO) * .28

MD = (14.40*44/100) + (2.7*32/100) + ((82.9+ .0) * 28/100 = 30.41

MOLECULAR WEIGHT OF STACK GAS

MWS = MD * (1. - (BWO/100)) + 18. * (BWO/100)

MWS = 30.41* (1. -(11.33/100)) + 18. * (11.33/100) = 29.01

STACK GAS VELOCITY AT STACK CONDITIONS

DELP = SUM. OF THE SQRT(VH * (TS + 460.))

VS = 85.49 * CP * DELP / (SQRT(MWS * PS) * PNTS)

VS = 85.49 * .84 * 551.064 / (SQRT(29.01 * 30.15) * 12. = 111.52 FPS

STACK GAS VOLUMETRIC FLOW AT STACK CONDITIONS

QS = VS * AS * 3600/144

QS = 111.52 * 9161. 3600/144 = 25539960. ACFH

STACK GAS VOLUMETRIC FLOW AT STANDARD CONDITIONS

QSSTD = 17.647 * QS * PS * (1. - (BWO/100)) / (TS + 460.)

$$QSSTD = \frac{17.647 * 25539960. * 30.15 * (1. - (11.33/100))}{(416. + 460.)} = 13758892. \text{ SCFH}$$

PERCENT ISOKINETIC

ISO = (305.58*(TS+460.))*((0.002669*VLC)+(VM*Y*(PB+(PM/13.6))/(TM+460.)))/(TT*VS*PS*DN*DN)

$$ISO = \frac{(305.58*(416.+460.))*((0.002669* 311.)+(116.140*1.001*(30.25+(3.050/13.6))/(86.+460.)))}{120. * 111.52 * 30.15 * .224 * .224} = 96.67 \text{ PERCENT}$$

PARTICULATE LOADING -- EPA METHOD 5 (AT STANDARD CONDITIONS)

CS = 0.001 * MN * 15.43 / VMSTD

CS = 0.001 * 0.0000E+00 * 15.43 / 114.427 = 0.0000E+00 GR/DSCF

FIELD DATA

PLANT	PHILLIPS PETRO SWEENY	DATE	11/09/82
SAMPLING LOCATION	FCC STACK	RUN NUMBER	1DM5W
SAMPLE TYPE	M5	PROBE LENGTH & TYPE	6 FT GLASS
OPERATOR	PHILLIPS	NOZZLE : I.D.	.226
AMBIENT TEMP.(DEG.F)	76.	ASSUMED MOISTURE	15.0
BAR.PRESS.(IN.HG)	30.25	SAMPLE BOX NUMBER	
STATIC PRESS.(IN.H2O)	-1.38	METER BOX NUMBER	F82
FILTER NUMBER(S)		METER HEAD DIFF.	1.73
STACK INSIDE DIM.(IN)	108.00 .00		
PITOT TUBE COEFF.	.84	PROBE HEATER SETTING	250.
THERM. NO.		HEATER BOX SETTING	250.
LEAKAGE	.005 CFM @ 7.2 IN.HG		
METER CALIB. FACTOR	.986		

READ & RECORD DATA EVERY 10.0 MINUTES

TRAVERSE POINT NO.	SAMPLE TIME (MIN.)	CLOCK TIME (24-HR CLOCK)	GAS METER READING (CU.FT.)	VELOCITY HEAD (IN.H2O)	ORIFICE PRESSURE DIFFERENTIAL (IN.H2O) DESIRED	ORIFICE PRESSURE DIFFERENTIAL (IN.H2O) ACTUAL	STACK TEMP (DEG.F)	DRY GAS METER TEMP (DEG.F) INLET	DRY GAS METER TEMP (DEG.F) OUTLET	PUMP VACUUM (IN.HG)	SAMPLE BOX TEMP (DEG.F)	IMPINGER TEMP (DEG.F)
INIT	0	1200	540.938									
	10.0	1210	550.560	2.500	3.10	3.10	417.	74.	76.	5.5	0.	82.
	20.0	1220	560.230	2.400	3.00	3.00	416.	77.	76.	6.0	0.	98.
	30.0	1230	569.830	2.400	3.00	3.00	416.	82.	78.	5.8	0.	112.
	40.0	1240	579.420	2.400	3.00	3.00	416.	83.	78.	5.8	0.	90.
	50.0	1250	589.000	2.400	3.00	3.00	416.	84.	78.	5.8	0.	80.
	60.0	1300	598.590	2.400	3.00	3.00	416.	85.	80.	5.8	0.	75.
	70.0	1310	608.150	2.400	3.00	3.00	415.	86.	80.	5.8	0.	74.
	80.0	1320	617.710	2.400	3.00	3.00	415.	86.	81.	5.8	0.	76.
	90.0	1330	627.350	2.400	3.00	3.00	416.	87.	81.	5.8	0.	78.
	100.0	1340	636.940	2.400	3.00	3.00	415.	87.	81.	6.1	0.	78.
	110.0	1350	646.510	2.400	3.00	3.00	415.	88.	82.	6.2	0.	72.
	120.0	1400	656.139	2.400	3.00	3.00	415.	88.	82.	6.2	0.	74.
TOTALS	120.0		115.201									
AVERAGE					3.01	3.01	416.	84.	79.	5.9	0.	82.

PARTICULATE FIELD DATA & RESULTS TABULATION

PLANT- NAME AND ADDRESS — TEST TEAM LEADER

PHILLIPS PETRO SWEENY — PHILLIPS

TEST 1DM5W FCC STACK

		ENGLISH UNITS	METRIC UNITS
TEST DATE		11/09/82	11/09/82
TB	TIME-START	1200	1200
TF	TIME-FINISH	1400	1400
TT	NET TIME OF TEST, MIN.	120.0	120.0
NP	NET SAMPLING POINTS	12	12
Y	METER CALIBRATION FACTOR	.986	.986
DN	SAMPLING NOZZLE DIAMETER	.226 IN	5.7 MM
CP	PITOT TUBE COEFFICIENT	.84	.84
PM	AVERAGE ORIFICE PRESSURE DROP	3.01 IN-H20	76.4 MM-H20
VM	VOLUME OF DRY GAS SAMPLED AT METER CONDITIONS	115.201 CU-FT	3.262 CU-M
TM	AVERAGE GAS METER TEMP	81.7 F	27.6 C
VMSTD	VOLUME OF DRY GAS SAMPLED AT STANDARD CONDITIONS*	112.762 SCF	3.193 SCM
VLC	TOTAL H20 COLLECTED IN IMPINGERS AND SILICA GEL,ML.	354.9	354.9
VWC	VOLUME OF WATER VAPOR AT STANDARD CONDITIONS*	16.705 SCF	.473 SCM
BWO	PERCENT MOISTURE BY VOLUME	12.90	12.90
FMD	MOLE FRACTION DRY GAS	.871	.871
PCO2	PERCENT CO2 BY VOL., DRY	14.40	14.40
PO2	PERCENT O2 BY VOL., DRY	2.70	2.70
PCO	PERCENT CO BY VOL., DRY	.00	.00
PN2	PERCENT N2 BY VOL., DRY	82.90	82.90
MD	MOLECULAR WT-DRY STACK GAS	30.41	30.41
MWS	MOLECULAR WT-STACK GAS	28.81	28.81

PB	BAROMETRIC PRESSURE	30.25	IN-HG	768.35	MM-HG
PSI	STATIC PRES OF STACK GAS	-1.38	IN-H2O	-35.05	MM-H2O
PS	STACK PRES, ABS.	30.15	IN-HG	765.77	MM-HG
TS	AVERAGE STACK TEMP	416.	F	213.	C
VS	AVG STACK GAS VELOCITY	111.9	FPS	34.1	MPS
AS	STACK AREA	9161.	SQ-IN	5.910	SQ-M
QSSTD	STACK FLOW RATE, DRY*	13560816.	SCFH	384002.	SCMH
QS	ACTUAL STACK FLOW RATE	25626220.	ACFH	725658.	ACMH
ISO	PERCENT ISOKINETIC	95.0		95.0	

* 68 DEG F, 29.92 IN.HG.

EXAMPLE PARTICULATE CALCULATIONS TEST NO. 10M5W

FCC STACK

VOLUME OF DRY GAS SAMPLED AT STANDARD CONDITIONS

VMSTD = (17.647 * VM * Y * (PB + PM / 13.6)) / (TM + 460.)

$$VMSTD = \frac{17.647 * 115.201 * .986 * (30.25 + 3.008 / 13.6)}{(82. + 460.)} = 112.762 \text{ DSCF}$$

VOLUME OF WATER VAPOR AT STANDARD CONDITIONS

VWC = .04707 * VLC

VWC = .04707 * 355. = 16.71 SCF

PERCENT MOISTURE IN STACK GAS

BWO = (100. * VWC) / (VMSTD + VWC)

$$BWO = \frac{100. * 16.71}{112.762 + 16.71} = 12.90 \text{ PERCENT}$$

MOLE FRACTION OF DRY STACK GAS

FMD = (100. - BWO) / 100.

$$FMD = \frac{100. - 12.9}{100.} = .871$$

AVERAGE MOLECULAR WEIGHT OF DRY STACK GAS

MD = (PCO2 * .44) + (PO2 * .32) + (PN2 + PCO) * .28

MD = (14.40*44/100) + (2.7*32/100) + ((82.9+ .0) * 28/100 = 30.41

MOLECULAR WEIGHT OF STACK GAS

MWS = MD * (1. - (BWO/100)) + 18. * (BWO/100)

MWS = 30.41* (1. -(12.90/100)) + 18. * (12.90/100) = 28.81

STACK GAS VELOCITY AT STACK CONDITIONS

DELP = SUM. OF THE SQRT(VH * (TS + 460.))

VS = 85.49 * CP * DELP / (SQRT(MWS * PS) * PNTS)

VS = 85.49 * .84 * 551.064 / (SQRT(28.81 * 30.15) * 12. = 111.89 FPS

STACK GAS VOLUMETRIC FLOW AT STACK CONDITIONS

QS = VS * AS * 3600/144

QS = 111.89 * 9161. 3600/144 = 25626220. ACFH

STACK GAS VOLUMETRIC FLOW AT STANDARD CONDITIONS

QSSTD = 17.647 * QS * PS * (1. - (BWO/100)) / (TS + 460.)

$$QSSTD = \frac{17.647 * 25626220. * 30.15 * (1. - (12.90/100))}{(416. + 460.)} = 13560816. \text{ SCFH}$$

PERCENT ISOKINETIC

ISO = (305.58*(TS+460.))*((0.002669*VLC)+(VM*Y*(PB+(PM/13.6))/(TM+460.)))/(TT*VS*PS*DN*DN)

$$ISO = \frac{(305.58*(416.+460.))*((0.002669* 355.)+(115.201* .986*(30.25+(3.008/13.6))/(82.+460.)))}{120. * 111.89 * 30.15 * .226 * .226} = 94.95 \text{ PERCENT}$$

PARTICULATE LOADING -- EPA METHOD 5 (AT STANDARD CONDITIONS)

CS = 0.001 * MN * 15.43 / VMSTD

CS = 0.001 * 0.0000E+00 * 15.43 / 112.762 = 0.0000E+00 GR/DSCF

FIELD DATA

PLANT	PHILLIPS SWEENY	DATE	11/10/82
SAMPLING LOCATION	FCC STACK	RUN NUMBER	2AM545
SAMPLE TYPE	M5-450	PROBE LENGTH & TYPE	6' GLASS
OPERATOR	DD	NOZZLE : I.D.	.219
AMBIENT TEMP.(DEG.F)	75.	ASSUMED MOISTURE	15.0
BAR.PRESS.(IN.HG)	30.13	SAMPLE BOX NUMBER	
STATIC PRESS.(IN.H2O)	-1.38	METER BOX NUMBER	FB3
FILTER NUMBER(S)	3450154	METER HEAD DIFF.	2.00
STACK INSIDE DIM.(IN)	108.00 .00		
PITOT TUBE COEFF.	.84	PROBE HEATER SETTING	450.
THERM. NO.		HEATER BOX SETTING	450.
LEAKAGE	.007 CFM @ 10.0 IN.HG		
METER CALIB. FACTOR	1.006		

READ & RECORD DATA EVERY 10.0 MINUTES

TRAVERSE POINT NO.	SAMPLE TIME (MIN.)	CLOCK TIME (24-HR CLOCK)	GAS METER READING (CU.FT.)	VELOCITY HEAD (IN.H2O)	ORIFICE PRESSURE DIFFERENTIAL (IN.H2O) DESIRED	ORIFICE PRESSURE DIFFERENTIAL (IN.H2O) ACTUAL	STACK TEMP (DEG.F)	DRY GAS METER TEMP (DEG.F) INLET	DRY GAS METER TEMP (DEG.F) OUTLET	PUMP VACUUM (IN.HG)	SAMPLE BOX TEMP (DEG.F)	IMPINGER TEMP (DEG.F)
INIT	0	1029	302.607									
	10.0	0	310.910	1.950	2.73	2.73	415.	75.	75.	7.8	0.	69.
	20.0	0	319.260	1.900	2.67	2.67	415.	79.	75.	9.4	0.	88.
	30.0	0	327.640	1.950	2.76	2.76	415.	85.	76.	8.6	0.	122.
	40.0	0	335.980	1.950	2.77	2.77	416.	87.	78.	8.7	0.	108.
	50.0	0	344.260	1.950	2.77	2.77	417.	89.	80.	8.7	0.	106.
	60.0	0	352.460	1.950	2.77	2.77	417.	89.	80.	9.6	0.	107.
	70.0	0	360.800	1.950	2.78	2.78	416.	89.	81.	10.2	0.	106.
	80.0	0	369.070	1.950	2.79	2.79	416.	89.	81.	10.1	0.	110.
	90.0	0	377.440	1.950	2.78	2.78	417.	89.	81.	10.1	0.	111.
	100.0	0	385.840	1.900	2.71	2.71	418.	89.	81.	9.9	0.	105.
	110.0	0	394.210	1.950	2.78	2.78	417.	89.	81.	9.8	0.	102.
	120.0	1229	402.529	1.950	2.78	2.78	418.	90.	81.	10.2	0.	104.
TOTALS	120.0		99.922									
AVERAGE					2.76	2.76	416.	87.	79.	9.4	0.	103.

PARTICULATE FIELD DATA & RESULTS TABULATION

PLANT- NAME AND ADDRESS — TEST TEAM LEADER

PHILLIPS SWEENY — DO

TEST 2AM545 FCC STACK

		ENGLISH UNITS	METRIC UNITS
TEST DATE		11/10/82	11/10/82
TB	TIME-START	1029	1029
TF	TIME-FINISH	1229	1229
TT	NET TIME OF TEST, MIN.	120.0	120.0
NP	NET SAMPLING POINTS	12	12
Y	METER CALIBRATION FACTOR	1.006	1.006
DN	SAMPLING NOZZLE DIAMETER	.219 IN	5.6 MM
CP	PITOT TUBE COEFFICIENT	.84	.84
PM	AVERAGE ORIFICE PRESSURE DROP	2.76 IN-H2O	70.0 MM-H2O
VM	VOLUME OF DRY GAS SAMPLED AT METER CONDITIONS	99.922 CU-FT	2.829 CU-M
TM	AVERAGE GAS METER TEMP	82.9 F	28.3 C
VMSTD	VOLUME OF DRY GAS SAMPLED AT STANDARD CONDITIONS*	99.116 SCF	2.807 SCM
VLC	TOTAL H2O COLLECTED IN IMPINGERS AND SILICA GEL,ML.	104.8	104.8
VWC	VOLUME OF WATER VAPOR AT STANDARD CONDITIONS*	4.933 SCF	.140 SCM
BWO	PERCENT MOISTURE BY VOLUME	4.74	4.74
FMD	MOLE FRACTION DRY GAS	.953	.953
PCO2	PERCENT CO2 BY VOL., DRY	15.00	15.00
PO2	PERCENT O2 BY VOL., DRY	1.30	1.30
PCO	PERCENT CO BY VOL., DRY	.00	.00
PN2	PERCENT N2 BY VOL., DRY	83.70	83.70
MD	MOLECULAR WT-DRY STACK GAS	30.45	30.45
MWS	MOLECULAR WT-STACK GAS	29.86	29.86

PB	BAROMETRIC PRESSURE	30.13	IN-HG	765.30	MM-HG
PSI	STATIC PRES OF STACK GAS	-1.38	IN-H2O	-35.05	MM-H2O
PS	STACK PRES, ABS.	30.03	IN-HG	762.72	MM-HG
TS	AVERAGE STACK TEMP	416.	F	214.	C
VS	AVG STACK GAS VELOCITY	98.9	FPS	30.2	MPS
AS	STACK AREA	9161.	SQ-IN	5.910	SQ-M
QSSTD	STACK FLOW RATE, DRY*	13049254.	SCFH	369516.	SCMH
QS	ACTUAL STACK FLOW RATE	22656108.	ACFH	641553.	ACMH
ISO	PERCENT ISOKINETIC	92.4		92.4	
MN	FILTERABLE-AMBIENT MG. EPA 5	69.6		69.6	
CS	FILTERABLE-AMBIENT	.0108	GR/DSCF*	24.801	MG/DSCM
MN	FILTERABLE-160 MG. EPA 5	56.2		56.2	
CS	FILTERABLE-160	.0087	GR/DSCF*	20.026	MG/DSCM
MN	FILTERABLE-232 MG. EPA 5	50.6		50.6	
CS	FILTERABLE-232	.0079	GR/DSCF*	18.030	MG/DSCM
MN	FILTERABLE-315 MG. EPA 5	46.4		46.4	
CS	FILTERABLE-315	.0072	GR/DSCF*	16.534	MG/DSCM

* 68 DEG F, 29.92 IN.HG.

EXAMPLE PARTICULATE CALCULATIONS TEST NO.2AM545

FCC STACK

VOLUME OF DRY GAS SAMPLED AT STANDARD CONDITIONS

VMSTD = (17.647 * VM * Y * (PB + PM / 13.6)) / (TM + 460.)

$$VMSTD = \frac{17.647 * 99.922 * 1.006 * (30.13 + 2.757 / 13.6)}{(83. + 460.)} = 99.116 \text{ DSCF}$$

VOLUME OF WATER VAPOR AT STANDARD CONDITIONS

VWC = .04707 * VLC

VWC = .04707 * 105. = 4.93 SCF

PERCENT MOISTURE IN STACK GAS

BWO = (100. * VWC) / (VMSTD + VWC)

$$BWO = \frac{100. * 4.93}{99.116 + 4.93} = 4.74 \text{ PERCENT}$$

MOLE FRACTION OF DRY STACK GAS

FMD = (100. - BWO) / 100.

$$FMD = \frac{100. - 4.7}{100.} = .953$$

AVERAGE MOLECULAR WEIGHT OF DRY STACK GAS

MD = (PCO2 * .44) + (PO2 * .32) + (PN2 + PCO) * .28

MD = (15.00*44/100) + (1.3*32/100) + ((83.7+ .0) * 28/100 = 30.45

MOLECULAR WEIGHT OF STACK GAS

MWS = MD * (1. - (BWO/100)) + 18. * (BWO/100)

MWS = 30.45* (1. -(4.74/100)) + 18. * (4.74/100) = 29.86

STACK GAS VELOCITY AT STACK CONDITIONS

DELP = SUM. OF THE SQRT(VH * (TS + 460.))

VS = 85.49 * CP * DELP / (SQRT(MWS * PS) * PNTS)

VS = 85.49 * .84 * 495.016 / (SQRT(29.86 * 30.03) * 12. = 98.93 FPS

STACK GAS VOLUMETRIC FLOW AT STACK CONDITIONS

QS = VS * AS * 3600/144

QS = 98.93 * 9161. 3600/144 = 22656108. ACFH

STACK GAS VOLUMETRIC FLOW AT STANDARD CONDITIONS

QSSTD = 17.647 * QS * PS * (1. - (BWO/100)) / (TS + 460.)

$$QSSTD = \frac{17.647 * 22656108. * 30.03 * (1. - (4.74/100))}{(416. + 460.)} = 13049254. \text{ SCFH}$$

PERCENT ISOKINETIC

ISO = (305.58*(TS+460.))*((0.002669*VLC)+(VM*Y*(PB+(PM/13.6))/(TM+460.)))/(TT*VS*PS*DN*DN)

$$ISO = \frac{(305.58*(416.+460.))*((0.002669* 105.)+(99.922*1.006*(30.13+(2.757/13.6))/(83.+460.)))}{120. * 98.93 * 30.03 * .219 * .219} = 92.36 \text{ PERCENT}$$

PARTICULATE LOADING -- EPA METHOD 5 (AT STANDARD CONDITIONS)

CS = 0.001 * MN * 15.43 / VMSTD

CS = 0.001 * 69.6 * 15.43 / 99.116 = .0108 GR/DSCF

FIELD DATA

PLANT	PHILLIPS SWEENY	DATE	11/10/82
SAMPLING LOCATION	FCC STACK	RUN NUMBER	28M545
SAMPLE TYPE	M5-450	PROBE LENGTH & TYPE	6' GLASS
OPERATOR	DD	NOZZLE : I.D.	.223
AMBIENT TEMP.(DEG.F)	75.	ASSUMED MOISTURE	15.0
BAR.PRESS.(IN.HG)	30.13	SAMPLE BOX NUMBER	
STATIC PRESS.(IN.H2O)	-1.38	METER BOX NUMBER	FB5
FILTER NUMBER(S)	3450155	METER HEAD DIFF.	1.95
STACK INSIDE DIM.(IN)	108.00 .00		
PITOT TUBE COEFF.	.84	PROBE HEATER SETTING	450.
THERM. NO.		HEATER BOX SETTING	450.
LEAKAGE	.076 CFM @ 12.0 IN.HG		
METER CALIB. FACTOR	.988		

READ & RECORD DATA EVERY 10.0 MINUTES

TRAVERSE POINT NO.	SAMPLE TIME (MIN.)	CLOCK TIME (24-HR CLOCK)	GAS METER READING (CU.FT.)	VELOCITY HEAD (IN.H2O)	ORIFICE PRESSURE DIFFERENTIAL (IN.H2O) DESIRED	ACTUAL	STACK TEMP (DEG.F)	DRY GAS METER TEMP (DEG.F) INLET	OUTLET	PUMP VACUUM (IN.HG)	SAMPLE BOX TEMP (DEG.F)	IMPINGER TEMP (DEG.F)
INIT	0	1030	921.798									
	10.0	0	930.740	1.950	2.73	2.73	415.	80.	79.	11.7	0.	104.
	20.0	0	939.520	1.900	2.67	2.67	415.	91.	80.	11.5	0.	118.
	30.0	0	948.370	1.950	2.76	2.76	415.	94.	84.	11.1	0.	126.
	40.0	0	957.050	1.950	2.77	2.77	416.	91.	86.	11.2	0.	110.
	50.0	0	965.720	1.950	2.77	2.77	417.	97.	85.	11.2	0.	98.
	60.0	0	974.510	1.950	2.77	2.77	417.	99.	85.	11.2	0.	95.
	70.0	0	983.370	1.950	2.78	2.78	416.	100.	86.	11.7	0.	94.
	80.0	0	992.120	1.950	2.79	2.79	416.	100.	88.	11.3	0.	96.
	90.0	0	.880	1.950	2.78	2.78	417.	99.	88.	11.7	0.	98.
	100.0	0	9.680	1.900	2.71	2.71	418.	99.	89.	11.6	0.	96.
	110.0	0	18.490	1.950	2.78	2.78	417.	99.	89.	11.3	0.	93.
	120.0	1230	27.382	1.950	2.78	2.78	418.	99.	89.	11.7	0.	95.
TOTALS	120.0		96.464									
AVERAGE					2.76	2.76	416.	96.	86.	11.4	0.	102.

PARTICULATE FIELD DATA & RESULTS TABULATION

PLANT- NAME AND ADDRESS TEST TEAM LEADER

PHILLIPS SWEENY DO

TEST 2BM545 FCC STACK

		ENGLISH UNITS	METRIC UNITS
TEST DATE		11/10/82	11/10/82
TB	TIME-START	1030	1030
TF	TIME-FINISH	1230	1230
TT	NET TIME OF TEST, MIN.	120.0	120.0
NP	NET SAMPLING POINTS	12	12
Y	METER CALIBRATION FACTOR	.988	.988
DN	SAMPLING NOZZLE DIAMETER	.223 IN	5.7 MM
CP	PITOT TUBE COEFFICIENT	.84	.84
PM	AVERAGE ORIFICE PRESSURE DROP	2.76 IN-H2O	70.0 MM-H2O
VM	VOLUME OF DRY GAS SAMPLED AT METER CONDITIONS	96.464 CU-FT	2.732 CU-M
TM	AVERAGE GAS METER TEMP	90.7 F	32.6 C
VMSTD	VOLUME OF DRY GAS SAMPLED AT STANDARD CONDITIONS*	92.644 SCF	2.623 SCM
VLC	TOTAL H2O COLLECTED IN IMPINGERS AND SILICA GEL,ML.	159.5	159.5
VWC	VOLUME OF WATER VAPOR AT STANDARD CONDITIONS*	7.508 SCF	.213 SCM
BWO	PERCENT MOISTURE BY VOLUME	7.50	7.50
FMD	MOLE FRACTION DRY GAS	.925	.925
PCO2	PERCENT CO2 BY VOL., DRY	15.00	15.00
PO2	PERCENT O2 BY VOL., DRY	1.30	1.30
PCO	PERCENT CO BY VOL., DRY	.00	.00
PN2	PERCENT N2 BY VOL., DRY	83.70	83.70
MD	MOLECULAR WT-DRY STACK GAS	30.45	30.45
MWS	MOLECULAR WT-STACK GAS	29.52	29.52

PB	BAROMETRIC PRESSURE	30.13	IN-HG	765.30	MM-HG
PSI	STATIC PRES OF STACK GAS	-1.38	IN-H2O	-35.05	MM-H2O
PS	STACK PRES, ABS.	30.03	IN-HG	762.72	MM-HG
TS	AVERAGE STACK TEMP	416.	F	214.	C
VS	AVG STACK GAS VELOCITY	99.5	FPS	30.3	MPS
AS	STACK AREA	9161.	SQ-IN	5.910	SQ-M
QSSTD	STACK FLOW RATE, DRY*	12745238.	SCFH	360907.	SCMH
QS	ACTUAL STACK FLOW RATE	22787392.	ACFH	645271.	ACMH
ISO	PERCENT ISOKINETIC	85.3		85.3	
MN	FILTERABLE-AMBIENT MG. EPA 5	64.3		64.3	
CS	FILTERABLE-AMBIENT	.0107	GR/DSCF*	24.513	MG/DSCM
MN	FILTERABLE-160 MG. EPA 5	51.5		51.5	
CS	FILTERABLE-160	.0086	GR/DSCF*	19.633	MG/DSCM
MN	FILTERABLE-232 MG. EPA 5	44.9		44.9	
CS	FILTERABLE-232	.0075	GR/DSCF*	17.117	MG/DSCM
MN	FILTERABLE-315 MG. EPA 5	40.4		40.4	
CS	FILTERABLE-315	.0067	GR/DSCF*	15.401	MG/DSCM

* 68 DEG F, 29.92 IN.HG.

EXAMPLE PARTICULATE CALCULATIONS TEST NO.2BM545

FCC STACK

VOLUME OF DRY GAS SAMPLED AT STANDARD CONDITIONS

VMSTD = (17.647 * VM * Y * (PB + PM / 13.6)) / (TM + 460.)

$$VMSTD = \frac{17.647 * 96.464 * .988 * (30.13 + 2.757 / 13.6)}{(91. + 460.)} = 92.644 \text{ DSCF}$$

VOLUME OF WATER VAPOR AT STANDARD CONDITIONS

VWC = .04707 * VLC

VWC = .04707 * 160. = 7.51 SCF

PERCENT MOISTURE IN STACK GAS

BWO = (100. * VWC) / (VMSTD + VWC)

$$BWO = \frac{100. * 7.51}{92.644 + 7.51} = 7.50 \text{ PERCENT}$$

MOLE FRACTION OF DRY STACK GAS

FMD = (100. - BWO) / 100.

$$FMD = \frac{100. - 7.5}{100.} = .925$$

AVERAGE MOLECULAR WEIGHT OF DRY STACK GAS

MD = (PCO2 * .44) + (PO2 * .32) + (PN2 + PCO) * .28

MD = (15.00*44/100) + (1.3*32/100) + ((83.7+ .0) * 28/100 = 30.45

MOLECULAR WEIGHT OF STACK GAS

MWS = MD * (1. - (BWO/100)) + 18. * (BWO/100)

MWS = 30.45* (1. -(7.50/100)) + 18. * (7.50/100) = 29.52

STACK GAS VELOCITY AT STACK CONDITIONS

DELP = SUM. OF THE SQRT(VH * (TS + 460.))

VS = 85.49 * CP * DELP / (SQRT(MWS * PS) * PNTS)

VS = 85.49 * .84 * 495.016 / (SQRT(29.52 * 30.03) * 12. = 99.50 FPS

STACK GAS VOLUMETRIC FLOW AT STACK CONDITIONS

QS = VS * AS * 3600/144

QS = 99.50 * 9161. 3600/144 = 22787392. ACFH

STACK GAS VOLUMETRIC FLOW AT STANDARD CONDITIONS

QSSTD = 17.647 * QS * PS * (1. - (BWO/100)) / (TS + 460.)

$$QSSTD = \frac{17.647 * 22787392. * 30.03 * (1. - (7.50/100))}{(416. + 460.)} = 12745238. \text{ SCFH}$$

PERCENT ISOKINETIC

ISO = (305.58*(TS+460.))*((0.002669*VLC)+(VM*Y*(PB+(PM/13.6))/(TM+460.)))/(TT*VS*PS*DN*DN)

$$ISO = \frac{(305.58*(416.+460.))*((0.002669* 160.)+(96.464* .988*(30.13+(2.757/13.6))/(91.+460.)))}{120. * 99.50 * 30.03 * .223 * .223} = 85.25 \text{ PERCENT}$$

PARTICULATE LOADING -- EPA METHOD 5 (AT STANDARD CONDITIONS)

CS = 0.001 * MN * 15.43 / VMSTD

CS = 0.001 * 64.3 * 15.43 / 92.644 = .0107 GR/DSCF

FIELD DATA

PLANT	PHILLIPS PETRO SWEENY	DATE	11/10/82
SAMPLING LOCATION	FCC OUTLET STACK	RUN NUMBER	2CM5B
SAMPLE TYPE	M5B	PROBE LENGTH & TYPE	6 FT GLASS
OPERATOR	PHILLIPS	NOZZLE : I.D.	.224
AMBIENT TEMP.(DEG.F)	82.	ASSUMED MOISTURE	15.0
BAR.PRESS.(IN.HG)	30.13	SAMPLE BOX NUMBER	
STATIC PRESS.(IN.H2O)	-1.38	METER BOX NUMBER	F87
FILTER NUMBER(S)	3450156	METER HEAD DIFF.	1.71
STACK INSIDE DIM.(IN)	108.00 .00		
PITOT TUBE COEFF.	.84	PROBE HEATER SETTING	320.
THERM. NO.		HEATER BOX SETTING	320.
LEAKAGE	.000 CFM @ 9.5 IN.HG		
METER CALIB. FACTOR	1.001		
READ & RECORD DATA EVERY	10.0 MINUTES		

TRAVERSE POINT NO.	SAMPLE TIME (MIN.)	CLOCK TIME (24-HR CLOCK)	GAS METER READING (CU.FT.)	VELOCITY HEAD (IN.H2O)	ORIFICE PRESSURE DIFFERENTIAL (IN.H2O) DESIRED	ORIFICE PRESSURE DIFFERENTIAL (IN.H2O) ACTUAL	STACK TEMP (DEG.F)	DRY GAS METER TEMP (DEG.F) INLET	DRY GAS METER TEMP (DEG.F) OUTLET	PUMP VACUUM (IN.HG)	SAMPLE BOX TEMP (DEG.F)	IMPINGER TEMP (DEG.F)
INIT	0	1030	703.715									
	10.0	1040	713.520	2.400	3.10	3.10	423.	81.	80.	7.3	0.	78.
	20.0	1050	723.330	2.400	3.10	3.10	424.	83.	80.	7.5	0.	80.
	30.0	1100	733.270	2.400	3.10	3.10	424.	88.	80.	7.8	0.	90.
	40.0	1110	743.250	2.400	3.20	3.20	425.	91.	82.	8.0	0.	92.
	50.0	1120	753.140	2.400	3.20	3.20	425.	92.	83.	8.0	0.	82.
	60.0	1130	762.990	2.400	3.20	3.20	425.	93.	84.	8.0	0.	84.
	70.0	1140	772.820	2.400	3.10	3.10	426.	94.	84.	8.0	0.	82.
	80.0	1150	782.650	2.400	3.10	3.10	426.	94.	85.	8.0	0.	78.
	90.0	1200	792.520	2.400	3.20	3.20	425.	94.	85.	8.0	0.	78.
	100.0	1210	802.330	2.400	3.20	3.20	426.	94.	86.	8.0	0.	76.
	110.0	1220	812.180	2.400	3.20	3.20	427.	93.	86.	8.0	0.	77.
	120.0	1230	822.018	2.400	3.20	3.20	426.	94.	86.	8.0	0.	82.
TOTALS	120.0		118.303									
AVERAGE					3.16	3.16	425.	91.	83.	7.9	0.	82.

PARTICULATE FIELD DATA & RESULTS TABULATION

PLANT- NAME AND ADDRESS — TEST TEAM LEADER

PHILLIPS PETRO SWEENY — PHILLIPS

TEST 2CM5B FCC OUTLET STACK

		ENGLISH UNITS	METRIC UNITS
TEST DATE		11/10/82	11/10/82
TB	TIME-START	1030	1030
TF	TIME-FINISH	1230	1230
TT	NET TIME OF TEST, MIN.	120.0	120.0
NP	NET SAMPLING POINTS	12	12
Y	METER CALIBRATION FACTOR	1.001	1.001
DN	SAMPLING NOZZLE DIAMETER	.224 IN	5.7 MM
CP	PITOT TUBE COEFFICIENT	.84	.84
PM	AVERAGE ORIFICE PRESSURE DROP	3.16 IN-H2O	80.2 MM-H2O
VM	VOLUME OF DRY GAS SAMPLED AT METER CONDITIONS	118.303 CU-FT	3.350 CU-M
TM	AVERAGE GAS METER TEMP	87.2 F	30.6 C
VMSTD	VOLUME OF DRY GAS SAMPLED AT STANDARD CONDITIONS*	115.962 SCF	3.284 SCM
VLC	TOTAL H2O COLLECTED IN IMPINGERS AND SILICA GEL,ML.	327.8	327.8
VWC	VOLUME OF WATER VAPOR AT STANDARD CONDITIONS*	15.430 SCF	.437 SCM
BWO	PERCENT MOISTURE BY VOLUME	11.74	11.74
FMD	MOLE FRACTION DRY GAS	.883	.883
PCO2	PERCENT CO2 BY VOL., DRY	15.00	15.00
PO2	PERCENT O2 BY VOL., DRY	1.30	1.30
PCO	PERCENT CO BY VOL., DRY	.00	.00
PN2	PERCENT N2 BY VOL., DRY	83.70	83.70
MD	MOLECULAR WT-DRY STACK GAS	30.45	30.45
MWS	MOLECULAR WT-STACK GAS	28.99	28.99

PB	BAROMETRIC PRESSURE	30.13	IN-HG	765.30	MM-HG
PSI	STATIC PRES OF STACK GAS	-1.38	IN-H2O	-35.05	MM-H2O
PS	STACK PRES, ABS.	30.03	IN-HG	762.72	MM-HG
TS	AVERAGE STACK TEMP	425.	F	218.	C
VS	AVG STACK GAS VELOCITY	112.2	FPS	34.2	MPS
AS	STACK AREA	9161.	SQ-IN	5.910	SQ-M
QSSTD	STACK FLOW RATE, DRY*	13574646.	SCFH	384393.	SCMH
QS	ACTUAL STACK FLOW RATE	25692156.	ACFH	727525.	ACMH
ISO	PERCENT ISOKINETIC	99.3		99.3	
MN	FILTERABLE-AMBIENT MG. EPA 5	74.9		74.9	
CS	FILTERABLE-AMBIENT	.0100	GR/DSCF*	22.812	MG/DSCM
MN	FILTERABLE-160 MG. EPA 5	63.3		63.3	
CS	FILTERABLE-160	.0084	GR/DSCF*	19.279	MG/DSCM
MN	FILTERABLE-232 MG. EPA 5	57.6		57.6	
CS	FILTERABLE-232	.0077	GR/DSCF*	17.543	MG/DSCM
MN	FILTERABLE-315 MG. EPA 5	54.1		54.1	
CS	FILTERABLE-315	.0072	GR/DSCF*	16.477	MG/DSCM

* 68 DEG F, 29.92 IN.HG.

EXAMPLE PARTICULATE CALCULATIONS TEST NO. 2CM5B

FCC OUTLET STACK

VOLUME OF DRY GAS SAMPLED AT STANDARD CONDITIONS

VMSTD = (17.647 * VM * Y * (PB + PM / 13.6)) / (TM + 460.)

$$VMSTD = \frac{17.647 * 118.303 * 1.001 * (30.13 + 3.158 / 13.6)}{(87. + 460.)} = 115.962 \text{ DSCF}$$

VOLUME OF WATER VAPOR AT STANDARD CONDITIONS

VWC = .04707 * VLC

VWC = .04707 * 328. = 15.43 SCF

PERCENT MOISTURE IN STACK GAS

BWO = (100. * VWC) / (VMSTD + VWC)

$$BWO = \frac{100. * 15.43}{115.962 + 15.43} = 11.74 \text{ PERCENT}$$

MOLE FRACTION OF DRY STACK GAS

FMD = (100. - BWO) / 100.

$$FMD = \frac{100. - 11.7}{100.} = .883$$

AVERAGE MOLECULAR WEIGHT OF DRY STACK GAS

MD = (PCO2 * .44) + (PO2 * .32) + (PN2 + PCO) * .28

MD = (15.00*44/100) + (1.3*32/100) + ((83.7+ .0) * 28/100 = 30.45

MOLECULAR WEIGHT OF STACK GAS

MWS = MD * (1. - (BWO/100)) + 18. * (BWO/100)

MWS = 30.45* (1. -(11.74/100)) + 18. * (11.74/100) = 28.99

STACK GAS VELOCITY AT STACK CONDITIONS

DELP = SUM. OF THE SQRT(VH * (TS + 460.))

VS = 85.49 * CP * DELP / (SQRT(MWS * PS) * PNTS)

VS = 85.49 * .84 * 553.094 / (SQRT(28.99 * 30.03) * 12. = 112.18 FPS

STACK GAS VOLUMETRIC FLOW AT STACK CONDITIONS

QS = VS * AS * 3600/144

QS = 112.18 * 9161. 3600/144 = 25692156. ACFH

STACK GAS VOLUMETRIC FLOW AT STANDARD CONDITIONS

QSSTD = 17.647 * QS * PS * (1. - (BWO/100)) / (TS + 460.)

$$QSSTD = \frac{17.647 * 25692156. * 30.03 * (1. - (11.74/100))}{(425. + 460.)} = 13574646. \text{ SCFH}$$

PERCENT ISOKINETIC

ISO = (305.58*(TS+460.))*((0.002669*VLC)+(VM*Y*(PB+(PM/13.6))/(TM+460.)))/(TT*VS*PS*DN*DN)

$$ISO = \frac{(305.58*(425.+460.))*((0.002669* 328.)+(118.303*1.001*(30.13+(3.158/13.6))/(87.+460.)))}{120. * 112.18 * 30.03 * .224 * .224} = 99.30 \text{ PERCENT}$$

PARTICULATE LOADING -- EPA METHOD 5 (AT STANDARD CONDITIONS)

CS = 0.001 * MN * 15.43 / VMSTD

CS = 0.001 * 74.9 * 15.43 / 115.962 = .0100 GR/DSCF

FIELD DATA

PLANT	PHILLIPS PETRO SWEENY	DATE	11/10/82
SAMPLING LOCATION	FCC STACK	RUN NUMBER	2DM5B
SAMPLE TYPE	M5B	PROBE LENGTH & TYPE	6 FT GLASS
OPERATOR	PHILLIPS	NOZZLE : I.D.	.227
AMBIENT TEMP.(DEG.F)	82.	ASSUMED MOISTURE	15.0
BAR.PRESS.(IN.HG)	30.13	SAMPLE BOX NUMBER	
STATIC PRESS.(IN.H2O)	-1.38	METER BOX NUMBER	FB2
FILTER NUMBER(S)	3450157	METER HEAD DIFF.	1.73
STACK INSIDE DIM.(IN)	108.00 .00		
PITOT TUBE COEFF.	.84	PROBE HEATER SETTING	320.
THERM. NO.		HEATER BOX SETTING	320.
LEAKAGE	.010 CFM @ 9.0 IN.HG		
METER CALIB. FACTOR	.986		

READ & RECORD DATA EVERY 10.0 MINUTES

TRAVERSE POINT NO.	SAMPLE TIME (MIN.)	CLOCK TIME (24-HR CLOCK)	GAS METER READING (CU.FT.)	VELOCITY HEAD (IN.H2O)	ORIFICE PRESSURE DIFFERENTIAL (IN.H2O) DESIRED	ACTUAL	STACK TEMP (DEG.F)	DRY GAS METER TEMP (DEG.F) INLET	OUTLET	PUMP VACUUM (IN.HG)	SAMPLE BOX TEMP (DEG.F)	IMPINGER TEMP (DEG.F)
INIT	0	1032	656.482									
	10.0	1042	666.240	2.400	3.10	3.10	423.	75.	77.	7.5	0.	90.
	20.0	1052	676.070	2.400	3.10	3.10	424.	80.	77.	7.8	0.	74.
	30.0	1102	685.930	2.400	3.10	3.10	424.	85.	78.	7.8	0.	98.
	40.0	1112	695.790	2.400	3.10	3.10	425.	87.	80.	8.0	0.	98.
	50.0	1122	705.680	2.400	3.10	3.10	425.	88.	81.	8.0	0.	94.
	60.0	1132	715.570	2.400	3.10	3.10	425.	88.	82.	8.0	0.	88.
	70.0	1142	725.490	2.400	3.20	3.20	426.	90.	83.	8.0	0.	94.
	80.0	1152	735.390	2.400	3.20	3.20	426.	90.	83.	8.0	0.	96.
	90.0	1202	745.260	2.400	3.20	3.20	425.	90.	84.	8.0	0.	96.
	100.0	1212	755.110	2.400	3.20	3.20	426.	90.	84.	8.0	0.	86.
	110.0	1222	764.960	2.400	3.20	3.20	427.	90.	85.	8.0	0.	84.
	120.0	1232	774.804	2.400	3.20	3.20	426.	90.	85.	8.0	0.	88.
TOTALS	120.0		118.322									
AVERAGE					3.15	3.15	425.	87.	82.	7.9	0.	91.

PARTICULATE FIELD DATA & RESULTS TABULATION

PLANT- NAME AND ADDRESS — TEST TEAM LEADER

PHILLIPS PETRO SWEENY — PHILLIPS

TEST 2DM5B FCC STACK

		ENGLISH UNITS	METRIC UNITS
TEST DATE		11/10/82	11/10/82
TB	TIME-START	1032	1032
TF	TIME-FINISH	1232	1232
TT	NET TIME OF TEST, MIN.	120.0	120.0
NP	NET SAMPLING POINTS	12	12
Y	METER CALIBRATION FACTOR	.986	.986
DN	SAMPLING NOZZLE DIAMETER	.227 IN	5.8 MM
CP	PITOT TUBE COEFFICIENT	.84	.84
PM	AVERAGE ORIFICE PRESSURE DROP	3.15 IN-H2O	80.0 MM-H2O
VM	VOLUME OF DRY GAS SAMPLED AT METER CONDITIONS	118.322 CU-FT	3.350 CU-M
TM	AVERAGE GAS METER TEMP	84.3 F	29.0 C
VMSTD	VOLUME OF DRY GAS SAMPLED AT STANDARD CONDITIONS*	114.852 SCF	3.252 SCM
VLC	TOTAL H2O COLLECTED IN IMPINGERS AND SILICA GEL,ML.	324.2	324.2
VWC	VOLUME OF WATER VAPOR AT STANDARD CONDITIONS*	15.260 SCF	.432 SCM
BWO	PERCENT MOISTURE BY VOLUME	11.73	11.73
FMD	MOLE FRACTION DRY GAS	.883	.883
PCO2	PERCENT CO2 BY VOL., DRY	15.00	15.00
PO2	PERCENT O2 BY VOL., DRY	1.30	1.30
PCO	PERCENT CO BY VOL., DRY	.00	.00
PN2	PERCENT N2 BY VOL., DRY	83.70	83.70
MD	MOLECULAR WT-DRY STACK GAS	30.45	30.45
MWS	MOLECULAR WT-STACK GAS	28.99	28.99

PB	BAROMETRIC PRESSURE	30.13	IN-HG	765.30	MM-HG
PSI	STATIC PRES OF STACK GAS	-1.38	IN-H2O	-35.05	MM-H2O
PS	STACK PRES, ABS.	30.03	IN-HG	762.72	MM-HG
TS	AVERAGE STACK TEMP	425.	F	218.	C
VS	AVG STACK GAS VELOCITY	112.2	FPS	34.2	MPS
AS	STACK AREA	9161.	SQ-IN	5.910	SQ-M
QSSTD	STACK FLOW RATE, DRY*	13576492.	SCFH	384446.	SCMH
QS	ACTUAL STACK FLOW RATE	25691344.	ACFH	727502.	ACMH
ISO	PERCENT ISOKINETIC	95.8		95.8	
MN	FILTERABLE-AMBIENT MG. EPA 5	75.6		75.6	
CS	FILTERABLE-AMBIENT	.0102	GR/DSCF*	23.248	MG/DSCM
MN	FILTERABLE-160 MG. EPA 5	62.8		62.8	
CS	FILTERABLE-160	.0084	GR/DSCF*	19.311	MG/DSCM
MN	FILTERABLE-232 MG. EPA 5	57.0		57.0	
CS	FILTERABLE-232	.0077	GR/DSCF*	17.528	MG/DSCM
MN	FILTERABLE-315 MG. EPA 5	53.6		53.6	
CS	FILTERABLE-315	.0072	GR/DSCF*	16.482	MG/DSCM

* 68 DEG F, 29.92 IN.HG.

EXAMPLE PARTICULATE CALCULATIONS TEST NO. 2DM5B

FCC STACK

VOLUME OF DRY GAS SAMPLED AT STANDARD CONDITIONS

VMSTD = (17.647 * VM * Y * (PB + PM / 13.6)) / (TM + 460.)

$$VMSTD = \frac{17.647 * 118.322 * .986 * (30.13 + 3.150 / 13.6)}{(84. + 460.)} = 114.852 \text{ DSCF}$$

VOLUME OF WATER VAPOR AT STANDARD CONDITIONS

VWC = .04707 * VLC

VWC = .04707 * 324. = 15.26 SCF

PERCENT MOISTURE IN STACK GAS

BWO = (100. * VWC) / (VMSTD + VWC)

$$BWO = \frac{100. * 15.26}{114.852 + 15.26} = 11.73 \text{ PERCENT}$$

MOLE FRACTION OF DRY STACK GAS

FMD = (100. - BWO) / 100.

$$FMD = \frac{100. - 11.7}{100.} = .883$$

AVERAGE MOLECULAR WEIGHT OF DRY STACK GAS

MD = (PCO2 * .44) + (PO2 * .32) + (PN2 + PCO) * .28

MD = (15.00*44/100) + (1.3*32/100) + ((83.7+ .0) * 28/100 = 30.45

MOLECULAR WEIGHT OF STACK GAS

MWS = MD * (1. - (BWO/100)) + 18. * (BWO/100)

MWS = 30.45* (1. -(11.73/100)) + 18. * (11.73/100) = 28.99

STACK GAS VELOCITY AT STACK CONDITIONS

DELP = SUM. OF THE SQRT(VH * (TS + 460.))

VS = 85.49 * CP * DELP / (SQRT(MWS * PS) * PNTS)

VS = 85.49 * .84 * 553.094 / (SQRT(28.99 * 30.03) * 12. = 112.18 FPS

STACK GAS VOLUMETRIC FLOW AT STACK CONDITIONS

QS = VS * AS * 3600/144

QS = 112.18 * 9161. 3600/144 = 25691344. ACFH

STACK GAS VOLUMETRIC FLOW AT STANDARD CONDITIONS

QSSTD = 17.647 * QS * PS * (1. - (BWO/100)) / (TS + 460.)

$$QSSTD = \frac{17.647 * 25691344. * 30.03 * (1. - (11.73/100))}{(425. + 460.)} = 13576492. \text{ SCFH}$$

PERCENT ISOKINETIC

ISO = (305.58*(TS+460.))*((0.002669*VLC)+(VM*Y*(PB+(PM/13.6))/(TM+460.)))/(TT*VS*PS*DN*DN)

$$ISO = \frac{(305.58*(425.+460.))*((0.002669* 324.)+(118.322* .986*(30.13+(3.150/13.6))/(84.+460.)))}{120. * 112.18 * 30.03 * .227 * .227} = 95.75 \text{ PERCENT}$$

PARTICULATE LOADING -- EPA METHOD 5 (AT STANDARD CONDITIONS)

CS = 0.001 * MN * 15.43 / VMSTD

CS = 0.001 * 75.6 * 15.43 / 114.852 = .0102 GR/DSCF

FIELD DATA

PLANT	PHILLIPS SWEENY	DATE	11/10/82
SAMPLING LOCATION	FCC STACK	RUN NUMBER	3AM5W
SAMPLE TYPE	M5W	PROBE LENGTH & TYPE	6' GLASS
OPERATOR	DO	NOZZLE : I.D.	.222
AMBIENT TEMP.(DEG.F)	80.	ASSUMED MOISTURE	12.0
BAR.PRESS.(IN.HG)	30.10	SAMPLE BOX NUMBER	
STATIC PRESS.(IN.H2O)	-1.38	METER BOX NUMBER	FB3
FILTER NUMBER(S)	3450173	METER HEAD DIFF.	2.00
STACK INSIDE DIM.(IN)	108.00 .00		
PITOT TUBE COEFF.	.84	PROBE HEATER SETTING	250.
THERM. NO.		HEATER BOX SETTING	250.
LEAKAGE	.000 CFM @ 8.0 IN.HG		
METER CALIB. FACTOR	1.006		
READ & RECORD DATA EVERY	10.0 MINUTES		

TRAVERSE POINT NO.	SAMPLE TIME (MIN.)	CLOCK TIME (24-HR CLOCK)	GAS METER READING (CU.FT.)	VELOCITY HEAD (IN.H2O)	ORIFICE PRESSURE DIFFERENTIAL (IN.H2O) DESIRED	ACTUAL	STACK TEMP (DEG.F)	DRY GAS METER TEMP (DEG.F) INLET	OUTLET	PUMP VACUUM (IN.HG)	SAMPLE BOX TEMP (DEG.F)	IMPINGER TEMP (DEG.F)
INIT	0	1359	402.888									
	10.0	0	411.520	2.100	2.96	2.96	417.	81.	81.	5.8	0.	0.
	20.0	0	420.040	2.050	2.89	2.89	418.	85.	81.	6.0	0.	75.
	30.0	0	428.670	2.100	2.99	2.99	416.	87.	81.	6.1	0.	117.
	40.0	0	437.310	2.050	2.93	2.93	415.	89.	81.	6.1	0.	122.
	50.0	0	445.940	2.100	3.00	3.00	415.	90.	82.	5.9	0.	114.
	60.0	0	454.440	2.050	2.94	2.94	414.	90.	82.	6.4	0.	93.
	70.0	0	462.990	2.050	2.93	2.93	415.	91.	82.	6.7	0.	87.
	80.0	0	471.490	2.100	3.00	3.00	416.	91.	82.	6.9	0.	87.
	90.0	0	479.880	2.100	3.00	3.00	416.	91.	81.	7.1	0.	84.
	100.0	0	488.300	2.100	3.00	3.00	416.	91.	81.	7.2	0.	83.
	110.0	0	496.820	2.100	3.00	3.00	417.	89.	81.	7.7	0.	84.
	120.0	1559	505.251	2.100	2.99	2.99	417.	89.	81.	7.7	0.	85.
TOTALS	120.0		102.363									
AVERAGE					2.97	2.97	416.	89.	81.	6.6	0.	86.

PARTICULATE FIELD DATA & RESULTS TABULATION

PLANT- NAME AND ADDRESS — TEST TEAM LEADER

PHILLIPS SWEENY — DO

TEST 3AM5W FCC STACK

		ENGLISH UNITS	METRIC UNITS
TEST DATE		11/10/82	11/10/82
TB	TIME-START	1359	1359
TF	TIME-FINISH	1559	1559
TT	NET TIME OF TEST, MIN.	120.0	120.0
NP	NET SAMPLING POINTS	12	12
Y	METER CALIBRATION FACTOR	1.006	1.006
DN	SAMPLING NOZZLE DIAMETER	.222 IN	5.6 MM
CP	PITOT TUBE COEFFICIENT	.84	.84
PM	AVERAGE ORIFICE PRESSURE DROP	2.97 IN-H2O	75.4 MM-H2O
VM	VOLUME OF DRY GAS SAMPLED AT METER CONDITIONS	102.363 CU-FT	2.899 CU-M
TM	AVERAGE GAS METER TEMP	85.0 F	29.4 C
VMSTD	VOLUME OF DRY GAS SAMPLED AT STANDARD CONDITIONS*	101.093 SCF	2.863 SCM
VLC	TOTAL H2O COLLECTED IN IMPINGERS AND SILICA GEL,ML.	214.0	214.0
VWC	VOLUME OF WATER VAPOR AT STANDARD CONDITIONS*	10.073 SCF	.285 SCM
BWO	PERCENT MOISTURE BY VOLUME	9.06	9.06
FMD	MOLE FRACTION DRY GAS	.909	.909
PCO2	PERCENT CO2 BY VOL., DRY	14.60	14.60
PO2	PERCENT O2 BY VOL., DRY	2.50	2.50
PCU	PERCENT CO BY VOL., DRY	.00	.00
PN2	PERCENT N2 BY VOL., DRY	82.90	82.90
MD	MOLECULAR WT-DRY STACK GAS	30.44	30.44
MWS	MOLECULAR WT-STACK GAS	29.31	29.31

PB	BAROMETRIC PRESSURE	30.10	IN-HG	764.54	MM-HG
PSI	STATIC PRES OF STACK GAS	-1.38	IN-H20	-35.05	MM-H20
PS	STACK PRES, ABS.	30.00	IN-HG	761.96	MM-HG
TS	AVERAGE STACK TEMP	416.	F	213.	C
VS	AVG STACK GAS VELOCITY	103.5	FPS	31.5	MPS
AS	STACK AREA	9161.	SQ-IN	5.910	SQ-M
QSSTD	STACK FLOW RATE, DRY*	13021502.	SCFH	368730.	SCMH
QS	ACTUAL STACK FLOW RATE	23694372.	ACFH	670954.	ACMH
ISO	PERCENT ISOKINETIC	91.9		91.9	

* 68 DEG F, 29.92 IN.HG.

EXAMPLE PARTICULATE CALCULATIONS TEST NO. 3AM5W

FCC STACK

VOLUME OF DRY GAS SAMPLED AT STANDARD CONDITIONS

VMSTD = (17.647 * VM * Y * (PB + PM / 13.6)) / (TM + 460.)

$$VMSTD = \frac{17.647 * 102.363 * 1.006 * (30.10 + 2.969 / 13.6)}{(85. + 460.)} = 101.093 \text{ DSCF}$$

VOLUME OF WATER VAPOR AT STANDARD CONDITIONS

VWC = .04707 * VLC

VWC = .04707 * 214. = 10.07 SCF

PERCENT MOISTURE IN STACK GAS

BWO = (100. * VWC) / (VMSTD + VWC)

$$BWO = \frac{100. * 10.07}{101.093 + 10.07} = 9.06 \text{ PERCENT}$$

MOLE FRACTION OF DRY STACK GAS

FMD = (100. - BWO) / 100.

$$FMD = \frac{100. - 9.1}{100.} = .909$$

AVERAGE MOLECULAR WEIGHT OF DRY STACK GAS

MD = (PCO2 * .44) + (PO2 * .32) + (PN2 + PCO) * .28

MD = (14.60*44/100) + (2.5*32/100) + ((82.9+ .0) * 28/100 = 30.44

MOLECULAR WEIGHT OF STACK GAS

MWS = MD * (1. - (BWO/100)) + 18. * (BWO/100)

MWS = 30.44* (1. -(9.06/100)) + 18. * (9.06/100) = 29.31

STACK GAS VELOCITY AT STACK CONDITIONS

DELP = SUM. OF THE SQRT(VH * (TS + 460.))

VS = 85.49 * CP * DELP / (SQRT(MWS * PS) * PNTS)

VS = 85.49 * .84 * 512.633 / (SQRT(29.31 * 30.00) * 12. = 103.46 FPS

STACK GAS VOLUMETRIC FLOW AT STACK CONDITIONS

QS = VS * AS * 3600/144

QS = 103.46 * 9161. 3600/144 = 23694372. ACFH

STACK GAS VOLUMETRIC FLOW AT STANDARD CONDITIONS

QSSTD = 17.647 * QS * PS * (1. - (BWO/100)) / (TS + 460.)

```
          17.647 *   23694372. *  30.00 * (1. - ( 9.06/100))
QSSTD = ------------------------------------------------- =   13021502. SCFH
                    ( 416. + 460.)
```

PERCENT ISOKINETIC

ISO = (305.58*(TS+460.))*((0.002669*VLC)+(VM*Y*(PB+(PM/13.6))/(TM+460.)))/(TT*VS*PS*DN*DN)

```
       (305.58*( 416.+460.))*((0.002669*  214.)+(  102.363*1.006*( 30.10+(   2.969/13.6))/(  85.+460.)))
ISO = ------------------------------------------------------------------------------------------------ =  91.88 PERCENT
                                  120. *    103.46 *   30.00 *  .222 *  .222
```

PARTICULATE LOADING -- EPA METHOD 5 (AT STANDARD CONDITIONS)

CS = 0.001 * MN * 15.43 / VMSTD

CS = 0.001 * 0.0000E+00 * 15.43 / 101.093 = 0.0000E+00 GR/DSCF

FIELD DATA

PLANT	PHILLIPS SWEENY	DATE	11/10/82
SAMPLING LOCATION	FCC STACK	RUN NUMBER	3BM5W
SAMPLE TYPE	M5W	PROBE LENGTH & TYPE	6' GLASS
OPERATOR	DO	NOZZLE : I.D.	.221
AMBIENT TEMP.(DEG.F)	80.	ASSUMED MOISTURE	12.0
BAR.PRESS.(IN.HG)	30.10	SAMPLE BOX NUMBER	
STATIC PRESS.(IN.H2O)	-1.38	METER BOX NUMBER	FB5
FILTER NUMBER(S)	3450163	METER HEAD DIFF.	1.95
STACK INSIDE DIM.(IN)	108.00 .00		
PITOT TUBE COEFF.	.84	PROBE HEATER SETTING	250.
THERM. NO.		HEATER BOX SETTING	250.
LEAKAGE	.012 CFM @ 14.0 IN.HG		
METER CALIB. FACTOR	.988		

READ & RECORD DATA EVERY 10.0 MINUTES

TRAVERSE POINT NO.	SAMPLE TIME (MIN.)	CLOCK TIME (24-HR CLOCK)	GAS METER READING (CU.FT.)	VELOCITY HEAD (IN.H2O)	ORIFICE PRESSURE DIFFERENTIAL (IN.H2O) DESIRED	ORIFICE PRESSURE DIFFERENTIAL (IN.H2O) ACTUAL	STACK TEMP (DEG.F)	DRY GAS METER TEMP (DEG.F) INLET	DRY GAS METER TEMP (DEG.F) OUTLET	PUMP VACUUM (IN.HG)	SAMPLE BOX TEMP (DEG.F)	IMPINGER TEMP (DEG.F)
INIT	0	1400	28.882									
	10.0	0	37.770	2.100	2.96	2.96	417.	84.	86.	8.3	0.	67.
	20.0	0	46.970	2.050	2.89	2.89	418.	89.	85.	8.8	0.	78.
	30.0	0	56.290	2.100	2.99	2.99	416.	99.	87.	8.8	0.	119.
	40.0	0	65.470	2.050	2.93	2.93	415.	99.	88.	9.1	0.	125.
	50.0	0	74.690	2.100	3.00	3.00	415.	99.	88.	9.3	0.	125.
	60.0	0	83.850	2.050	2.94	2.94	414.	100.	88.	9.9	0.	99.
	70.0	0	93.120	2.050	2.93	2.93	415.	101.	89.	10.8	0.	84.
	80.0	0	102.380	2.100	3.00	3.00	416.	101.	89.	11.1	0.	85.
	90.0	0	111.650	2.100	3.00	3.00	416.	101.	89.	11.7	0.	85.
	100.0	0	120.960	2.100	3.00	3.00	416.	100.	89.	11.9	0.	87.
	110.0	0	130.340	2.100	3.00	3.00	417.	99.	89.	12.3	0.	89.
	120.0	1600	139.609	2.100	2.99	2.99	417.	97.	88.	13.1	0.	83.
TOTALS	120.0		110.727									
AVERAGE					2.97	2.97	416.	97.	88.	10.4	0.	94.

PARTICULATE FIELD DATA & RESULTS TABULATION

PLANT- NAME AND ADDRESS — TEST TEAM LEADER

PHILLIPS SWEENY — DO

TEST 3BM5W FCC STACK

		ENGLISH UNITS	METRIC UNITS
TEST DATE		11/10/82	11/10/82
TB	TIME-START	1400	1400
TF	TIME-FINISH	1600	1600
TT	NET TIME OF TEST, MIN.	120.0	120.0
NP	NET SAMPLING POINTS	12	12
Y	METER CALIBRATION FACTOR	.988	.988
DN	SAMPLING NOZZLE DIAMETER	.221 IN	5.6 MM
CP	PITOT TUBE COEFFICIENT	.84	.84
PM	AVERAGE ORIFICE PRESSURE DROP	2.97 IN-H2O	75.4 MM-H2O
VM	VOLUME OF DRY GAS SAMPLED AT METER CONDITIONS	110.727 CU-FT	3.135 CU-M
TM	AVERAGE GAS METER TEMP	92.7 F	33.7 C
VMSTD	VOLUME OF DRY GAS SAMPLED AT STANDARD CONDITIONS*	105.907 SCF	2.999 SCM
VLC	TOTAL H2O COLLECTED IN IMPINGERS AND SILICA GEL,ML.	235.2	235.2
VWC	VOLUME OF WATER VAPOR AT STANDARD CONDITIONS*	11.071 SCF	.313 SCM
BWO	PERCENT MOISTURE BY VOLUME	9.46	9.46
FMD	MOLE FRACTION DRY GAS	.905	.905
PCO2	PERCENT CO2 BY VOL., DRY	14.60	14.60
PO2	PERCENT O2 BY VOL., DRY	2.50	2.50
PCO	PERCENT CO BY VOL., DRY	.00	.00
PN2	PERCENT N2 BY VOL., DRY	82.90	82.90
MD	MOLECULAR WT-DRY STACK GAS	30.44	30.44
MWS	MOLECULAR WT-STACK GAS	29.26	29.26

PB	BAROMETRIC PRESSURE	30.10	IN-HG	764.54	MM-HG
PSI	STATIC PRES OF STACK GAS	-1.38	IN-H2O	-35.05	MM-H2O
PS	STACK PRES, ABS.	30.00	IN-HG	761.96	MM-HG
TS	AVERAGE STACK TEMP	416.	F	213.	C
VS	AVG STACK GAS VELOCITY	103.5	FPS	31.6	MPS
AS	STACK AREA	9161.	SQ-IN	5.910	SQ-M
QSSTD	STACK FLOW RATE, DRY*	12974910.	SCFH	367411.	SCMH
QS	ACTUAL STACK FLOW RATE	23714652.	ACFH	671528.	ACMH
ISO	PERCENT ISOKINETIC	97.5		97.5	

* 68 DEG F, 29.92 IN.HG.

EXAMPLE PARTICULATE CALCULATIONS TEST NO. 3BM5W

FCC STACK

VOLUME OF DRY GAS SAMPLED AT STANDARD CONDITIONS

VMSTD = (17.647 * VM * Y * (PB + PM / 13.6)) / (TM + 460.)

$$VMSTD = \frac{17.647 * 110.727 * .988 * (30.10 + 2.969 / 13.6)}{(93. + 460.)} = 105.907 \text{ DSCF}$$

VOLUME OF WATER VAPOR AT STANDARD CONDITIONS

VWC = .04707 * VLC

VWC = .04707 * 235. = 11.07 SCF

PERCENT MOISTURE IN STACK GAS

BWO = (100. * VWC) / (VMSTD + VWC)

$$BWO = \frac{100. * 11.07}{105.907 + 11.07} = 9.46 \text{ PERCENT}$$

MOLE FRACTION OF DRY STACK GAS

FMD = (100. - BWO) / 100.

$$FMD = \frac{100. - 9.5}{100.} = .905$$

AVERAGE MOLECULAR WEIGHT OF DRY STACK GAS

MD = (PCO2 * .44) + (PO2 * .32) + (PN2 + PCO) * .28

MD = (14.60*44/100) + (2.5*32/100) + ((82.9+ .0) * 28/100 = 30.44

MOLECULAR WEIGHT OF STACK GAS

MWS = MD * (1. - (BWO/100)) + 18. * (BWO/100)

MWS = 30.44* (1. -(9.46/100)) + 18. * (9.46/100) = 29.26

STACK GAS VELOCITY AT STACK CONDITIONS

DELP = SUM. OF THE SQRT(VH * (TS + 460.))

VS = 85.49 * CP * DELP / (SQRT(MWS * PS) * PNTS)

VS = 85.49 * .84 * 512.633 / (SQRT(29.26 * 30.00) * 12. = 103.55 FPS

STACK GAS VOLUMETRIC FLOW AT STACK CONDITIONS

QS = VS * AS * 3600/144

QS = 103.55 * 9161. 3600/144 = 23714652. ACFH

STACK GAS VOLUMETRIC FLOW AT STANDARD CONDITIONS

QSSTD = 17.647 * QS * PS * (1. - (BWO/100)) / (TS + 460.)

$$QSSTD = \frac{17.647 * 23714652. * 30.00 * (1. - (9.46/100))}{(416. + 460.)} = 12974910. \text{ SCFH}$$

PERCENT ISOKINETIC

ISO = (305.58*(TS+460.))*((0.002669*VLC)+(VM*Y*(PB+(PM/13.6))/(TM+460.)))/(TT*VS*PS*DN*DN)

$$ISO = \frac{(305.58*(416.+460.))*((0.002669* 235.)+(110.727* .988*(30.10+(2.969/13.6))/(93.+460.)))}{120. * 103.55 * 30.00 * .221 * .221} = 97.47 \text{ PERCENT}$$

PARTICULATE LOADING -- EPA METHOD 5 (AT STANDARD CONDITIONS)

CS = 0.001 * MN * 15.43 / VMSTD

CS = 0.001 * 0.0000E+00 * 15.43 / 105.907 = 0.0000E+00 GR/DSCF

FIELD DATA

PLANT	PHILLIPS PETRO SWEENY	DATE	11/10/82
SAMPLING LOCATION	FCC STACK	RUN NUMBER	3CM5
SAMPLE TYPE	M5	PROBE LENGTH & TYPE	6 FT GLASS
OPERATOR	PHILLIPS	NOZZLE : I.D.	.224
AMBIENT TEMP.(DEG.F)	78.	ASSUMED MOISTURE	12.0
BAR.PRESS.(IN.HG)	30.10	SAMPLE BOX NUMBER	
STATIC PRESS.(IN.H2O)	-1.38	METER BOX NUMBER	F87
FILTER NUMBER(S)	3450176	METER HEAD DIFF.	1.71
STACK INSIDE DIM.(IN)	108.00 .00		
PITOT TUBE COEFF.	.84	PROBE HEATER SETTING	250.
THERM. NO.		HEATER BOX SETTING	250.
LEAKAGE	.000 CFM @ 6.5 IN.HG		
METER CALIB. FACTOR	1.001		

READ & RECORD DATA EVERY 10.0 MINUTES

TRAVERSE POINT NO.	SAMPLE TIME (MIN.)	CLOCK TIME (24-HR CLOCK)	GAS METER READING (CU.FT.)	VELOCITY HEAD (IN.H2O)	ORIFICE PRESSURE DIFFERENTIAL (IN.H2O) DESIRED	ORIFICE PRESSURE DIFFERENTIAL (IN.H2O) ACTUAL	STACK TEMP (DEG.F)	DRY GAS METER TEMP (DEG.F) INLET	DRY GAS METER TEMP (DEG.F) OUTLET	PUMP VACUUM (IN.HG)	SAMPLE BOX TEMP (DEG.F)	IMPINGER TEMP (DEG.F)
INIT	0	1400	822.312									
	10.0	1410	832.260	2.400	3.20	3.20	423.	86.	85.	5.5	0.	78.
	20.0	1420	842.130	2.400	3.20	3.20	421.	87.	84.	5.0	0.	74.
	30.0	1430	852.050	2.400	3.20	3.20	421.	90.	84.	5.0	0.	72.
	40.0	1440	861.960	2.400	3.20	3.20	421.	93.	85.	5.0	0.	86.
	50.0	1450	871.910	2.400	3.20	3.20	419.	94.	85.	5.0	0.	90.
	60.0	1500	881.840	2.400	3.20	3.20	419.	95.	85.	5.0	0.	94.
	70.0	1510	891.790	2.400	3.20	3.20	420.	96.	86.	5.0	0.	92.
	80.0	1520	901.720	2.400	3.20	3.20	420.	96.	88.	5.0	0.	86.
	90.0	1530	911.640	2.400	3.20	3.20	420.	96.	88.	5.0	0.	82.
	100.0	1540	921.590	2.400	3.20	3.20	420.	96.	88.	5.0	0.	76.
	110.0	1550	931.460	2.400	3.20	3.20	421.	94.	87.	5.3	0.	78.
	120.0	1600	941.314	2.400	3.20	3.20	420.	94.	87.	5.3	0.	84.
TOTALS	120.0		119.002									
AVERAGE					3.20	3.20	420.	93.	86.	5.1	0.	83.

PARTICULATE FIELD DATA & RESULTS TABULATION

PLANT- NAME AND ADDRESS — TEST TEAM LEADER

PHILLIPS PETRO SWEENY — PHILLIPS

TEST 3CM5 FCC STACK

		ENGLISH UNITS	METRIC UNITS
TEST DATE		11/10/82	11/10/82
TB	TIME-START	1400	1400
TF	TIME-FINISH	1600	1600
TT	NET TIME OF TEST, MIN.	120.0	120.0
NP	NET SAMPLING POINTS	12	12
Y	METER CALIBRATION FACTOR	1.001	1.001
DN	SAMPLING NOZZLE DIAMETER	.224 IN	5.7 MM
CP	PITOT TUBE COEFFICIENT	.84	.84
PM	AVERAGE ORIFICE PRESSURE DROP	3.20 IN-H2O	81.3 MM-H2O
VM	VOLUME OF DRY GAS SAMPLED AT METER CONDITIONS	119.002 CU-FT	3.370 CU-M
TM	AVERAGE GAS METER TEMP	89.5 F	32.0 C
VMSTD	VOLUME OF DRY GAS SAMPLED AT STANDARD CONDITIONS*	116.040 SCF	3.286 SCM
VLC	TOTAL H2O COLLECTED IN IMPINGERS AND SILICA GEL,ML.	346.7	346.7
VWC	VOLUME OF WATER VAPOR AT STANDARD CONDITIONS*	16.319 SCF	.462 SCM
BWO	PERCENT MOISTURE BY VOLUME	12.33	12.33
FMD	MOLE FRACTION DRY GAS	.877	.877
PCO2	PERCENT CO2 BY VOL., DRY	14.60	14.60
PO2	PERCENT O2 BY VOL., DRY	2.50	2.50
PCO	PERCENT CO BY VOL., DRY	.00	.00
PN2	PERCENT N2 BY VOL., DRY	82.90	82.90
MD	MOLECULAR WT-DRY STACK GAS	30.44	30.44
MWS	MOLECULAR WT-STACK GAS	28.90	28.90

PB	BAROMETRIC PRESSURE	30.10	IN-HG	764.54	MM-HG
PSI	STATIC PRES OF STACK GAS	-1.38	IN-H2O	-35.05	MM-H2O
PS	STACK PRES, ABS.	30.00	IN-HG	761.96	MM-HG
TS	AVERAGE STACK TEMP	420.	F	216.	C
VS	AVG STACK GAS VELOCITY	112.1	FPS	34.2	MPS
AS	STACK AREA	9161.	SQ-IN	5.910	SQ-M
QSSTD	STACK FLOW RATE, DRY*	13534376.	SCFH	383253.	SCMH
QS	ACTUAL STACK FLOW RATE	25674512.	ACFH	727025.	ACMH
ISO	PERCENT ISOKINETIC	99.7		99.7	
MN	FILTERABLE-AMBIENT MG. EPA 5	243.8		243.8	
CS	FILTERABLE-AMBIENT	.0324	GR/DSCF*	74.203	MG/DSCM
MN	FILTERABLE-232 MG. EPA 5	131.9		131.9	
CS	FILTERABLE-232	.0175	GR/DSCF*	40.145	MG/DSCM
MN	FILTERABLE-315 MG. EPA 5	112.3		112.3	
CS	FILTERABLE-315	.0149	GR/DSCF*	34.180	MG/DSCM

* 68 DEG F, 29.92 IN.HG.

EXAMPLE PARTICULATE CALCULATIONS TEST NO. 3CM5

FCC STACK

VOLUME OF DRY GAS SAMPLED AT STANDARD CONDITIONS

VMSTD = (17.647 * VM * Y * (PB + PM / 13.6)) / (TM + 460.)

$$VMSTD = \frac{17.647 * 119.002 * 1.001 * (30.10 + 3.200 / 13.6)}{(90. + 460.)} = 116.040 \text{ DSCF}$$

VOLUME OF WATER VAPOR AT STANDARD CONDITIONS

VWC = .04707 * VLC

VWC = .04707 * 347. = 16.32 SCF

PERCENT MOISTURE IN STACK GAS

BWO = (100. * VWC) / (VMSTD + VWC)

$$BWO = \frac{100. * 16.32}{116.040 + 16.32} = 12.33 \text{ PERCENT}$$

MOLE FRACTION OF DRY STACK GAS

FMD = (100. - BWO) / 100.

$$FMD = \frac{100. - 12.3}{100.} = .877$$

AVERAGE MOLECULAR WEIGHT OF DRY STACK GAS

MD = (PCO2 * .44) + (PO2 * .32) + (PN2 + PCO) * .28

MD = (14.60*44/100) + (2.5*32/100) + ((82.9+ .0) * 28/100 = 30.44

MOLECULAR WEIGHT OF STACK GAS

MWS = MD * (1. - (BWO/100)) + 18. * (BWO/100)

MWS = 30.44* (1. -(12.33/100)) + 18. * (12.33/100) = 28.90

STACK GAS VELOCITY AT STACK CONDITIONS

DELP = SUM. OF THE SQRT(VH * (TS + 460.))

VS = 85.49 * CP * DELP / (SQRT(MWS * PS) * PNTS)

VS = 85.49 * .84 * 551.608 / (SQRT(28.90 * 30.00) * 12. = 112.11 FPS

STACK GAS VOLUMETRIC FLOW AT STACK CONDITIONS

QS = VS * AS * 3600/144

QS = 112.11 * 9161. 3600/144 = 25674512. ACFM

STACK GAS VOLUMETRIC FLOW AT STANDARD CONDITIONS

QSSTD = 17.647 * QS * PS * (1. - (BWO/100)) / (TS + 460.)

$$QSSTD = \frac{17.647 * 25674512. * 30.00 * (1. - (12.33/100))}{(420. + 460.)} = 13534376. \text{ SCFM}$$

PERCENT ISOKINETIC

ISO = (305.58*(TS+460.))*((0.002669*VLC)+(VM*Y*(PB+(PM/13.6))/(TM+460.)))/(TT*VS*PS*DN*DN)

$$ISO = \frac{(305.58*(420.+460.))*((0.002669* 347.)+(119.002*1.001*(30.10+(3.200/13.6))/(90.+460.)))}{120. * 112.11 * 30.00 * .224 * .224} = 99.66 \text{ PERCENT}$$

PARTICULATE LOADING -- EPA METHOD 5 (AT STANDARD CONDITIONS)

CS = 0.001 * MN * 15.43 / VMSTD

CS = 0.001 * 243.8 * 15.43 / 116.040 = .0324 GR/DSCF

FIELD DATA

PLANT	PHILLIPS PETRO SWEENY	DATE	11/10/82
SAMPLING LOCATION	FCC STACK	RUN NUMBER	3DM5
SAMPLE TYPE	M5	PROBE LENGTH & TYPE	6 FT GLASS
OPERATOR	PHILLIPS	NOZZLE : I.D.	.226
AMBIENT TEMP.(DEG.F)	80.	ASSUMED MOISTURE	12.0
BAR.PRESS.(IN.HG)	30.10	SAMPLE BOX NUMBER	
STATIC PRESS.(IN.H2O)	-1.38	METER BOX NUMBER	FB2
FILTER NUMBER(S)	3450162	METER HEAD DIFF.	1.73
STACK INSIDE DIM.(IN)	108.00 .00		
PITOT TUBE COEFF.	.84	PROBE HEATER SETTING	250.
THERM. NO.		HEATER BOX SETTING	250.
LEAKAGE	.010 CFM @ 7.5 IN.HG		
METER CALIB. FACTOR	.986		

READ & RECORD DATA EVERY 10.0 MINUTES

TRAVERSE POINT NO.	SAMPLE TIME (MIN.)	CLOCK TIME (24-HR CLOCK)	GAS METER READING (CU.FT.)	VELOCITY HEAD (IN.H2O)	ORIFICE PRESSURE DIFFERENTIAL (IN.H2O) DESIRED	ORIFICE PRESSURE DIFFERENTIAL (IN.H2O) ACTUAL	STACK TEMP (DEG.F)	DRY GAS METER TEMP (DEG.F) INLET	DRY GAS METER TEMP (DEG.F) OUTLET	PUMP VACUUM (IN.HG)	SAMPLE BOX TEMP (DEG.F)	IMPINGER TEMP (DEG.F)
INIT	0	1402	775.388									
	10.0	1412	785.400	2.400	3.10	3.10	423.	80.	82.	6.0	0.	82.
	20.0	1422	795.210	2.400	3.10	3.10	421.	81.	80.	5.8	0.	66.
	30.0	1432	805.040	2.400	3.10	3.10	421.	85.	81.	5.8	0.	68.
	40.0	1442	814.900	2.400	3.20	3.20	421.	89.	81.	5.8	0.	64.
	50.0	1452	824.860	2.400	3.20	3.20	419.	90.	82.	5.6	0.	70.
	60.0	1502	834.720	2.400	3.20	3.20	419.	90.	83.	5.6	0.	72.
	70.0	1512	844.680	2.400	3.20	3.20	420.	90.	84.	5.8	0.	74.
	80.0	1522	854.650	2.400	3.20	3.20	420.	92.	85.	6.0	0.	82.
	90.0	1532	864.660	2.400	3.20	3.20	420.	92.	85.	6.0	0.	76.
	100.0	1542	874.540	2.400	3.20	3.20	420.	92.	85.	6.2	0.	70.
	110.0	1552	884.390	2.400	3.20	3.20	421.	89.	84.	6.2	0.	72.
	120.0	1602	894.116	2.400	3.20	3.20	420.	89.	84.	6.2	0.	78.
TOTALS	120.0		118.728									
AVERAGE					3.17	3.17	420.	88.	83.	5.9	0.	73.

PARTICULATE FIELD DATA & RESULTS TABULATION

PLANT- NAME AND ADDRESS — TEST TEAM LEADER

PHILLIPS PETRO SWEENY — PHILLIPS

TEST 3DM5 FCC STACK

		ENGLISH UNITS	METRIC UNITS
TEST DATE		11/10/82	11/10/82
TB	TIME-START	1402	1402
TF	TIME-FINISH	1602	1602
TT	NET TIME OF TEST, MIN.	120.0	120.0
NP	NET SAMPLING POINTS	12	12
Y	METER CALIBRATION FACTOR	.986	.986
DN	SAMPLING NOZZLE DIAMETER	.226 IN	5.7 MM
CP	PITOT TUBE COEFFICIENT	.84	.84
PM	AVERAGE ORIFICE PRESSURE DROP	3.17 IN-H2O	80.6 MM-H2O
VM	VOLUME OF DRY GAS SAMPLED AT METER CONDITIONS	118.728 CU-FT	3.362 CU-M
TM	AVERAGE GAS METER TEMP	85.6 F	29.8 C
VMSTD	VOLUME OF DRY GAS SAMPLED AT STANDARD CONDITIONS*	114.849 SCF	3.252 SCM
VLC	TOTAL H2O COLLECTED IN IMPINGERS AND SILICA GEL,ML.	382.4	382.4
VWC	VOLUME OF WATER VAPOR AT STANDARD CONDITIONS*	18.000 SCF	.510 SCM
BWO	PERCENT MOISTURE BY VOLUME	13.55	13.55
FMD	MOLE FRACTION DRY GAS	.865	.865
PCO2	PERCENT CO2 BY VOL., DRY	14.60	14.60
PO2	PERCENT O2 BY VOL., DRY	2.50	2.50
PCO	PERCENT CO BY VOL., DRY	.00	.00
PN2	PERCENT N2 BY VOL., DRY	82.90	82.90
MD	MOLECULAR WT-DRY STACK GAS	30.44	30.44
MWS	MOLECULAR WT-STACK GAS	28.75	28.75

PB	BAROMETRIC PRESSURE	30.10	IN-HG	764.54	MM-HG
PSI	STATIC PRES OF STACK GAS	-1.38	IN-H2O	-35.05	MM-H2O
PS	STACK PRES, ABS.	30.00	IN-HG	761.96	MM-HG
TS	AVERAGE STACK TEMP	420.	F	216.	C
VS	AVG STACK GAS VELOCITY	112.4	FPS	34.3	MPS
AS	STACK AREA	9161.	SQ-IN	5.910	SQ-M
QSSTD	STACK FLOW RATE, DRY*	13381278.	SCFH	378918.	SCMH
QS	ACTUAL STACK FLOW RATE	25742132.	ACFH	728940.	ACMH
ISO	PERCENT ISOKINETIC	98.0		98.0	
MN	FILTERABLE-AMBIENT MG. EPA 5	260.3		260.3	
CS	FILTERABLE-AMBIENT	.0350	GR/DSCF*	80.046	MG/DSCM
MN	FILTERABLE-232 MG. EPA 5	142.1		142.1	
CS	FILTERABLE-232	.0191	GR/DSCF*	43.698	MG/DSCM
MN	FILTERABLE-315 MG. EPA 5	115.5		115.5	
CS	FILTERABLE-315	.0155	GR/DSCF*	35.518	MG/DSCM

* 68 DEG F, 29.92 IN.HG.

EXAMPLE PARTICULATE CALCULATIONS TEST NO. 3DM5

FCC STACK

VOLUME OF DRY GAS SAMPLED AT STANDARD CONDITIONS

VMSTD = (17.647 * VM * Y * (PB + PM / 13.6)) / (TM + 460.)

$$VMSTD = \frac{17.647 * 118.728 * .986 * (30.10 + 3.175 / 13.6)}{(86. + 460.)} = 114.849 \text{ DSCF}$$

VOLUME OF WATER VAPOR AT STANDARD CONDITIONS

VWC = .04707 * VLC

VWC = .04707 * 382. = 18.00 SCF

PERCENT MOISTURE IN STACK GAS

BWO = (100. * VWC) / (VMSTD + VWC)

$$BWO = \frac{100. * 18.00}{114.849 + 18.00} = 13.55 \text{ PERCENT}$$

MOLE FRACTION OF DRY STACK GAS

FMD = (100. - BWO) / 100.

$$FMD = \frac{100. - 13.5}{100.} = .865$$

AVERAGE MOLECULAR WEIGHT OF DRY STACK GAS

MD = (PCO2 * .44) + (PO2 * .32) + (PN2 + PCO) * .28

MD = (14.60*44/100) + (2.5*32/100) + ((82.9+ .0) * 28/100 = 30.44

MOLECULAR WEIGHT OF STACK GAS

MWS = MD * (1. - (BWO/100)) + 18. * (BWO/100)

MWS = 30.44* (1. -(13.55/100)) + 18. * (13.55/100) = 28.75

STACK GAS VELOCITY AT STACK CONDITIONS

DELP = SUM. OF THE SQRT(VH * (TS + 460.))

VS = 85.49 * CP * DELP / (SQRT(MWS * PS) * PNTS)

VS = 85.49 * .84 * 551.608 / (SQRT(28.75 * 30.00) * 12. = 112.40 FPS

STACK GAS VOLUMETRIC FLOW AT STACK CONDITIONS

QS = VS * AS * 3600/144

QS = 112.40 * 9161. 3600/144 = 25742132. ACFH

STACK GAS VOLUMETRIC FLOW AT STANDARD CONDITIONS

QSSTD = 17.647 * QS * PS * (1. - (BWO/100)) / (TS + 460.)

$$QSSTD = \frac{17.647 * 25742132. * 30.00 * (1. - (13.55/100))}{(420. + 460.)} = 13381278. \text{ SCFH}$$

PERCENT ISOKINETIC

ISO = (305.58*(TS+460.))*((0.002669*VLC)+(VM*Y*(PB+(PM/13.6))/(TM+460.)))/(TT*VS*PS*DN*DN)

$$ISO = \frac{(305.58*(420.+460.))*((0.002669* 382.)+(118.728* .986*(30.10+(3.175/13.6))/(86.+460.)))}{120. * 112.40 * 30.00 * .226 * .226} = 98.01 \text{ PERCENT}$$

PARTICULATE LOADING -- EPA METHOD 5 (AT STANDARD CONDITIONS)

CS = 0.001 * MN * 15.43 / VMSTD

CS = 0.001 * 260.3 * 15.43 / 114.849 = .0350 GR/DSCF

FIELD DATA

PLANT	PHILLIPS SWEENY	DATE	11/11/82
SAMPLING LOCATION	FCC STACK	RUN NUMBER	4AM545
SAMPLE TYPE	M5-450	PROBE LENGTH & TYPE	6' GLASS
OPERATOR	DO	NOZZLE : I.D.	.219
AMBIENT TEMP.(DEG.F)	75.	ASSUMED MOISTURE	8.0
BAR.PRESS.(IN.HG)	29.92	SAMPLE BOX NUMBER	
STATIC PRESS.(IN.H2O)	-1.38	METER BOX NUMBER	FB3
FILTER NUMBER(S)	3450222	METER HEAD DIFF.	2.00
STACK INSIDE DIM.(IN)	108.00 .00		
PITOT TUBE COEFF.	.84	PROBE HEATER SETTING	450.
THERM. NO.		HEATER BOX SETTING	450.
LEAKAGE	.006 CFM @ 9.0 IN.HG		
METER CALIB. FACTOR	1.006		

READ & RECORD DATA EVERY 10.0 MINUTES

TRAVERSE POINT NO.	SAMPLE TIME (MIN.)	CLOCK TIME (24-HR CLOCK)	GAS METER READING (CU.FT.)	VELOCITY HEAD (IN.H2O)	ORIFICE PRESSURE DIFFERENTIAL (IN.H2O) DESIRED	ACTUAL	STACK TEMP (DEG.F)	DRY GAS METER TEMP (DEG.F) INLET	OUTLET	PUMP VACUUM (IN.HG)	SAMPLE BOX TEMP (DEG.F)	IMPINGER TEMP (DEG.F)
INIT	0	1133	505.563									
	10.0	0	513.940	1.950	2.92	2.92	420.	74.	73.	7.9	0.	0.
	20.0	0	522.300	1.900	2.86	2.86	420.	77.	73.	8.3	0.	84.
	30.0	0	531.040	1.950	2.97	2.97	420.	84.	73.	8.4	0.	132.
	40.0	0	539.530	1.900	2.89	2.89	420.	86.	75.	7.5	0.	122.
	50.0	0	548.060	1.900	2.89	2.89	420.	86.	77.	7.6	0.	110.
	60.0	0	556.660	1.950	2.98	2.98	420.	88.	79.	7.6	0.	105.
	70.0	0	565.250	1.950	2.98	2.98	420.	87.	79.	8.1	0.	99.
	80.0	0	573.880	1.950	2.98	2.98	420.	88.	79.	8.3	0.	103.
	90.0	0	582.490	1.950	2.98	2.98	420.	89.	79.	8.5	0.	109.
	100.0	0	591.170	1.900	2.91	2.91	420.	89.	79.	8.5	0.	110.
	110.0	0	599.800	1.900	2.91	2.91	420.	89.	80.	8.4	0.	101.
	120.0	1333	608.480	1.950	2.98	2.98	420.	89.	80.	8.7	0.	100.
TOTALS	120.0		102.917									
AVERAGE					2.94	2.94	420.	86.	77.	8.1	0.	98.

PARTICULATE FIELD DATA & RESULTS TABULATION

PLANT- NAME AND ADDRESS — TEST TEAM LEADER

PHILLIPS SWEENY — DO

TEST 4AM545 FCC STACK

		ENGLISH UNITS	METRIC UNITS
TEST DATE		11/11/82	11/11/82
TB	TIME-START	1133	1133
TF	TIME-FINISH	1333	1333
TT	NET TIME OF TEST, MIN.	120.0	120.0
NP	NET SAMPLING POINTS	12	12
Y	METER CALIBRATION FACTOR	1.006	1.006
DN	SAMPLING NOZZLE DIAMETER	.219 IN	5.6 MM
CP	PITOT TUBE COEFFICIENT	.84	.84
PM	AVERAGE ORIFICE PRESSURE DROP	2.94 IN-H20	74.6 MM-H20
VM	VOLUME OF DRY GAS SAMPLED AT METER CONDITIONS	102.917 CU-FT	2.914 CU-M
TM	AVERAGE GAS METER TEMP	81.3 F	27.4 C
VMSTD	VOLUME OF DRY GAS SAMPLED AT STANDARD CONDITIONS*	101.713 SCF	2.880 SCM
VLC	TOTAL H20 COLLECTED IN IMPINGERS AND SILICA GEL,ML.	140.4	140.4
VWC	VOLUME OF WATER VAPOR AT STANDARD CONDITIONS*	6.609 SCF	.187 SCM
BWO	PERCENT MOISTURE BY VOLUME	6.10	6.10
FMD	MOLE FRACTION DRY GAS	.939	.939
PCO2	PERCENT CO2 BY VOL., DRY	14.35	14.35
PO2	PERCENT O2 BY VOL., DRY	1.90	1.90
PCO	PERCENT CO BY VOL., DRY	.00	.00
PN2	PERCENT N2 BY VOL., DRY	83.75	83.75
MD	MOLECULAR WT-DRY STACK GAS	30.37	30.37
MWS	MOLECULAR WT-STACK GAS	29.62	29.62

PB	BAROMETRIC PRESSURE	29.92	IN-HG	759.97	MM-HG
PSI	STATIC PRES OF STACK GAS	-1.38	IN-H2O	-35.05	MM-H2O
PS	STACK PRES, ABS.	29.82	IN-HG	757.39	MM-HG
TS	AVERAGE STACK TEMP	420.	F	216.	C
VS	AVG STACK GAS VELOCITY	99.6	FPS	30.3	MPS
AS	STACK AREA	9161.	SQ-IN	5.910	SQ-M
QSSTD	STACK FLOW RATE, DRY*	12802938.	SCFH	362541.	SCMH
QS	ACTUAL STACK FLOW RATE	22802056.	ACFH	645686.	ACMH
ISO	PERCENT ISOKINETIC	96.6		96.6	
MN	FILTERABLE-AMBIENT MG. EPA 5	106.6		106.6	
CS	FILTERABLE-AMBIENT	.0162	GR/DSCF*	37.015	MG/DSCM
MN	FILTERABLE-315 MG. EPA 5	46.8		46.8	
CS	FILTERABLE-315	.0071	GR/DSCF*	16.250	MG/DSCM

* 68 DEG F, 29.92 IN.HG.

EXAMPLE PARTICULATE CALCULATIONS TEST NO.4AM545

FCC STACK

VOLUME OF DRY GAS SAMPLED AT STANDARD CONDITIONS

VMSTD = (17.647 * VM * Y * (PB + PM / 13.6)) / (TM + 460.)

$$VMSTD = \frac{17.647 * 102.917 * 1.006 * (29.92 + 2.938 / 13.6)}{(81. + 460.)} = 101.713 \text{ DSCF}$$

VOLUME OF WATER VAPOR AT STANDARD CONDITIONS

VWC = .04707 * VLC

VWC = .04707 * 140. = 6.61 SCF

PERCENT MOISTURE IN STACK GAS

BWO = (100. * VWC) / (VMSTD + VWC)

$$BWO = \frac{100. * 6.61}{101.713 + 6.61} = 6.10 \text{ PERCENT}$$

MOLE FRACTION OF DRY STACK GAS

FMD = (100. - BWO) / 100.

$$FMD = \frac{100. - 6.1}{100.} = .939$$

AVERAGE MOLECULAR WEIGHT OF DRY STACK GAS

MD = (PCO2 * .44) + (PO2 * .32) + (PN2 + PCO) * .28

MD = (14.35*44/100) + (1.9*32/100) + ((83.8+ .0) * 28/100 = 30.37

MOLECULAR WEIGHT OF STACK GAS

MWS = MD * (1. - (BWO/100)) + 18. * (BWO/100)

MWS = 30.37* (1. -(6.10/100)) + 18. * (6.10/100) = 29.62

STACK GAS VELOCITY AT STACK CONDITIONS

DELP = SUM. OF THE SQRT(VH * (TS + 460.))

VS = 85.49 * CP * DELP / (SQRT(MWS * PS) * PNTS)

VS = 85.49 * .84 * 494.423 / (SQRT(29.62 * 29.82) * 12. = 99.56 FPS

STACK GAS VOLUMETRIC FLOW AT STACK CONDITIONS

QS = VS * AS * 3600/144

QS = 99.56 * 9161. 3600/144 = 22802056. ACFH

STACK GAS VOLUMETRIC FLOW AT STANDARD CONDITIONS

QSSTD = 17.647 * QS * PS * (1. - (BWO/100)) / (TS + 460.)

$$QSSTD = \frac{17.647 * 22802056. * 29.82 * (1. - (6.10/100))}{(420. + 460.)} = 12802938. \text{ SCFH}$$

PERCENT ISOKINETIC

ISO = (305.58*(TS+460.))*((0.002669*VLC)+(VM*Y*(PB+(PM/13.6))/(TM+460.)))/(TT*VS*PS*DN*DN)

$$ISO = \frac{(305.58*(420.+460.))*((0.002669* 140.)+(102.917*1.006*(29.92+(2.938/13.6))/(81.+460.)))}{120. * 99.56 * 29.82 * .219 * .219} = 96.61 \text{ PERCENT}$$

PARTICULATE LOADING -- EPA METHOD 5 (AT STANDARD CONDITIONS)

CS = 0.001 * MN * 15.43 / VMSTD

CS = 0.001 * 106.6 * 15.43 / 101.713 = .0162 GR/DSCF

FIELD DATA

PLANT	PHILLIPS SWEENY	DATE	11/11/82
SAMPLING LOCATION	FCC STACK	RUN NUMBER	4BM545
SAMPLE TYPE	M5-450	PROBE LENGTH & TYPE	6' GLASS
OPERATOR	DO	NOZZLE : I.D.	.223
AMBIENT TEMP.(DEG.F)	75.	ASSUMED MOISTURE	8.0
BAR.PRESS.(IN.HG)	29.92	SAMPLE BOX NUMBER	
STATIC PRESS.(IN.H2O)	-1.38	METER BOX NUMBER	FB5
FILTER NUMBER(S)	3450221	METER HEAD DIFF.	1.95
STACK INSIDE DIM.(IN)	108.00 .00		
PITOT TUBE COEFF.	.84	PROBE HEATER SETTING	450.
THERM. NO.		HEATER BOX SETTING	450.
LEAKAGE	.018 CFM @ 15.5 IN.HG		
METER CALIB. FACTOR	.988		

READ & RECORD DATA EVERY 10.0 MINUTES

TRAVERSE POINT NO.	SAMPLE TIME (MIN.)	CLOCK TIME (24-HR CLOCK)	GAS METER READING (CU.FT.)	VELOCITY HEAD (IN.H2O)	ORIFICE PRESSURE DIFFERENTIAL (IN.H2O) DESIRED	ORIFICE PRESSURE DIFFERENTIAL (IN.H2O) ACTUAL	STACK TEMP (DEG.F)	DRY GAS METER TEMP (DEG.F) INLET	DRY GAS METER TEMP (DEG.F) OUTLET	PUMP VACUUM (IN.HG)	SAMPLE BOX TEMP (DEG.F)	IMPINGER TEMP (DEG.F)
INIT	0	1134	139.908									
	10.0	0	149.260	1.950	2.92	2.92	420.	77.	78.	9.7	0.	0.
	20.0	0	158.550	1.900	2.86	2.86	420.	81.	78.	10.3	0.	78.
	30.0	0	167.940	1.950	2.97	2.97	420.	93.	80.	10.8	0.	118.
	40.0	0	177.050	1.900	2.89	2.89	420.	91.	82.	10.2	0.	126.
	50.0	0	186.120	1.900	2.89	2.89	420.	93.	81.	10.5	0.	104.
	60.0	0	195.450	1.950	2.98	2.98	420.	94.	82.	11.2	0.	89.
	70.0	0	204.760	1.950	2.98	2.98	420.	95.	83.	11.7	0.	89.
	80.0	0	214.060	1.950	2.98	2.98	420.	95.	83.	12.2	0.	87.
	90.0	0	223.370	1.950	2.98	2.98	420.	95.	84.	12.3	0.	89.
	100.0	0	232.620	1.900	2.91	2.91	420.	94.	84.	13.2	0.	84.
	110.0	0	241.940	1.900	2.91	2.91	420.	94.	85.	13.6	0.	87.
	120.0	1334	251.129	1.950	2.98	2.98	420.	95.	85.	14.6	0.	89.
TOTALS	120.0		111.221									
AVERAGE					2.94	2.94	420.	91.	82.	11.7	0.	87.

PARTICULATE FIELD DATA & RESULTS TABULATION

PLANT- NAME AND ADDRESS — TEST TEAM LEADER

PHILLIPS SWEENY — DO

TEST 4BM545 FCC STACK

		ENGLISH UNITS	METRIC UNITS
TEST DATE		11/11/82	11/11/82
TB	TIME-START	1134	1134
TF	TIME-FINISH	1334	1334
TT	NET TIME OF TEST, MIN.	120.0	120.0
NP	NET SAMPLING POINTS	12	12
Y	METER CALIBRATION FACTOR	.988	.988
DN	SAMPLING NOZZLE DIAMETER	.223 IN	5.7 MM
CP	PITOT TUBE COEFFICIENT	.84	.84
PM	AVERAGE ORIFICE PRESSURE DROP	2.94 IN-H2O	74.6 MM-H2O
VM	VOLUME OF DRY GAS SAMPLED AT METER CONDITIONS	111.221 CU-FT	3.149 CU-M
TM	AVERAGE GAS METER TEMP	86.8 F	30.4 C
VMSTD	VOLUME OF DRY GAS SAMPLED AT STANDARD CONDITIONS*	106.884 SCF	3.027 SCM
VLC	TOTAL H2O COLLECTED IN IMPINGERS AND SILICA GEL,ML.	192.4	192.4
VWC	VOLUME OF WATER VAPOR AT STANDARD CONDITIONS*	9.056 SCF	.256 SCM
BWO	PERCENT MOISTURE BY VOLUME	7.81	7.81
FMD	MOLE FRACTION DRY GAS	.922	.922
PCO2	PERCENT CO2 BY VOL., DRY	14.35	14.35
PO2	PERCENT O2 BY VOL., DRY	1.90	1.90
PCO	PERCENT CO BY VOL., DRY	.00	.00
PN2	PERCENT N2 BY VOL., DRY	83.75	83.75
MD	MOLECULAR WT-DRY STACK GAS	30.37	30.37
MWS	MOLECULAR WT-STACK GAS	29.41	29.41

PB	BAROMETRIC PRESSURE	29.92	IN-HG	759.97	MM-HG
PSI	STATIC PRES OF STACK GAS	-1.38	IN-H2O	-35.05	MM-H2O
PS	STACK PRES, ABS.	29.82	IN-HG	757.39	MM-HG
TS	AVERAGE STACK TEMP	420.	F	216.	C
VS	AVG STACK GAS VELOCITY	99.9	FPS	30.5	MPS
AS	STACK AREA	9161.	SQ-IN	5.910	SQ-M
QSSTD	STACK FLOW RATE, DRY*	12614894.	SCFM	357216.	SCMM
QS	ACTUAL STACK FLOW RATE	22883944.	ACFM	648005.	ACMM
ISO	PERCENT ISOKINETIC	99.4		99.4	
MN	FILTERABLE-AMBIENT MG. EPA 5	65.9		65.9	
CS	FILTERABLE-AMBIENT	.0095	GR/DSCF*	21.776	MG/DSCM
MN	FILTERABLE-315 MG. EPA 5	47.0		47.0	
CS	FILTERABLE-315	.0068	GR/DSCF*	15.530	MG/DSCM

* 68 DEG F, 29.92 IN.HG.

EXAMPLE PARTICULATE CALCULATIONS TEST NO.4BM545

FCC STACK

VOLUME OF DRY GAS SAMPLED AT STANDARD CONDITIONS

VMSTD = (17.647 * VM * Y * (PB + PM / 13.6)) / (TM + 460.)

$$VMSTD = \frac{17.647 * 111.221 * .988 * (29.92 + 2.938 / 13.6)}{(87. + 460.)} = 106.884 \text{ DSCF}$$

VOLUME OF WATER VAPOR AT STANDARD CONDITIONS

VWC = .04707 * VLC

VWC = .04707 * 192. = 9.06 SCF

PERCENT MOISTURE IN STACK GAS

BWO = (100. * VWC) / (VMSTD + VWC)

$$BWO = \frac{100. * 9.06}{106.884 + 9.06} = 7.81 \text{ PERCENT}$$

MOLE FRACTION OF DRY STACK GAS

FMD = (100. - BWO) / 100.

$$FMD = \frac{100. - 7.8}{100.} = .922$$

AVERAGE MOLECULAR WEIGHT OF DRY STACK GAS

MD = (PCO2 * .44) + (PO2 * .32) + (PN2 + PCO) * .28

MD = (14.35*44/100) + (1.9*32/100) + ((83.8+ .0) * 28/100 = 30.37

MOLECULAR WEIGHT OF STACK GAS

MWS = MD * (1. - (BWO/100)) + 18. * (BWO/100)

MWS = 30.37* (1. -(7.81/100)) + 18. * (7.81/100) = 29.41

STACK GAS VELOCITY AT STACK CONDITIONS

DELP = SUM. OF THE SQRT(VH * (TS + 460.))

VS = 85.49 * CP * DELP / (SQRT(MWS * PS) * PNTS)

VS = 85.49 * .84 * 494.423 / (SQRT(29.41 * 29.82) * 12. = 99.92 FPS

STACK GAS VOLUMETRIC FLOW AT STACK CONDITIONS

QS = VS * AS * 3600/144

QS = 99.92 * 9161. 3600/144 = 22883944. ACFH

STACK GAS VOLUMETRIC FLOW AT STANDARD CONDITIONS

QSSTD = 17.647 * QS * PS * (1. - (BWO/100)) / (TS + 460.)

$$QSSTD = \frac{17.647 * 22883944. * 29.82 * (1. - (7.81/100))}{(420. + 460.)} = 12614894. \text{ SCFH}$$

PERCENT ISOKINETIC

ISO = (305.58*(TS+460.))*((0.002669*VLC)+(VM*Y*(PB+(PM/13.6))/(TM+460.)))/(TT*VS*PS*DN*DN)

$$ISO = \frac{(305.58*(420.+460.))*((0.002669*192.)+(111.221*.988*(29.92+(2.938/13.6))/(87.+460.)))}{120. * 99.92 * 29.82 * .223 * .223} = 99.37 \text{ PERCENT}$$

PARTICULATE LOADING -- EPA METHOD 5 (AT STANDARD CONDITIONS)

CS = 0.001 * MN * 15.43 / VMSTD

CS = 0.001 * 65.9 * 15.43 / 106.884 = .0095 GR/DSCF

FIELD DATA

PLANT	PHILLIPS PETRO SWEENY	DATE	11/11/82
SAMPLING LOCATION	FCC STACK	RUN NUMBER	4CM58
SAMPLE TYPE	M5	PROBE LENGTH & TYPE	6 FT GLASS
OPERATOR	PHILLIPS	NOZZLE : I.D.	.224
AMBIENT TEMP.(DEG.F)	75.	ASSUMED MOISTURE	12.0
BAR.PRESS.(IN.HG)	29.92	SAMPLE BOX NUMBER	
STATIC PRESS.(IN.H2O)	-1.38	METER BOX NUMBER	FB7
FILTER NUMBER(S)	3450223	METER HEAD DIFF.	1.71
STACK INSIDE DIM.(IN)	108.00 .00		
PITOT TUBE COEFF.	.84	PROBE HEATER SETTING	320.
THERM. NO.		HEATER BOX SETTING	320.
LEAKAGE	.000 CFM @ 8.5 IN.HG		
METER CALIB. FACTOR	1.001		
READ & RECORD DATA EVERY	10.0 MINUTES		

TRAVERSE POINT NO.	SAMPLE TIME (MIN.)	CLOCK TIME (24-HR CLOCK)	GAS METER READING (CU.FT.)	VELOCITY HEAD (IN.H2O)	ORIFICE PRESSURE DIFFERENTIAL (IN.H2O) DESIRED	ORIFICE PRESSURE DIFFERENTIAL (IN.H2O) ACTUAL	STACK TEMP (DEG.F)	DRY GAS METER TEMP (DEG.F) INLET	DRY GAS METER TEMP (DEG.F) OUTLET	PUMP VACUUM (IN.HG)	SAMPLE BOX TEMP (DEG.F)	IMPINGER TEMP (DEG.F)
INIT	0	1132	941.491									
	10.0	1142	951.380	2.400	3.20	3.20	423.	81.	80.	6.0	0.	88.
	20.0	1152	961.270	2.400	3.20	3.20	420.	84.	81.	6.0	0.	84.
	30.0	1202	971.240	2.400	3.20	3.20	419.	88.	81.	6.0	0.	96.
	40.0	1212	981.290	2.400	3.20	3.20	418.	91.	82.	6.2	0.	98.
	50.0	1222	991.310	2.400	3.20	3.20	418.	92.	83.	6.4	0.	102.
	60.0	1232	1.340	2.400	3.20	3.20	417.	93.	85.	6.4	0.	110.
	70.0	1242	11.360	2.400	3.20	3.20	417.	93.	85.	6.4	0.	102.
	80.0	1252	21.330	2.400	3.20	3.20	417.	93.	85.	6.4	0.	82.
	90.0	1302	31.450	2.400	3.20	3.20	417.	94.	86.	6.5	0.	82.
	100.0	1312	41.520	2.400	3.20	3.20	416.	94.	86.	7.0	0.	78.
	110.0	1322	51.570	2.400	3.20	3.20	418.	94.	86.	7.2	0.	84.
	120.0	1332	61.585	2.400	3.20	3.20	417.	94.	86.	7.5	0.	84.
TOTALS	120.0		120.094									
AVERAGE					3.20	3.20	418.	91.	84.	6.5	0.	91.

PARTICULATE FIELD DATA & RESULTS TABULATION

PLANT- NAME AND ADDRESS — TEST TEAM LEADER

PHILLIPS PETRO SWEENY — PHILLIPS

TEST 4CM58 FCC STACK

		ENGLISH UNITS	METRIC UNITS
TEST DATE		11/11/82	11/11/82
TB	TIME-START	1132	1132
TF	TIME-FINISH	1332	1332
TT	NET TIME OF TEST, MIN.	120.0	120.0
NP	NET SAMPLING POINTS	12	12
Y	METER CALIBRATION FACTOR	1.001	1.001
DN	SAMPLING NOZZLE DIAMETER	.224 IN	5.7 MM
CP	PITOT TUBE COEFFICIENT	.84	.84
PM	AVERAGE ORIFICE PRESSURE DROP	3.20 IN-H2O	81.3 MM-H2O
VM	VOLUME OF DRY GAS SAMPLED AT METER CONDITIONS	120.094 CU-FT	3.401 CU-M
TM	AVERAGE GAS METER TEMP	87.4 F	30.8 C
VMSTD	VOLUME OF DRY GAS SAMPLED AT STANDARD CONDITIONS*	116.870 SCF	3.309 SCM
VLC	TOTAL H2O COLLECTED IN IMPINGERS AND SILICA GEL,ML.	301.6	301.6
VWC	VOLUME OF WATER VAPOR AT STANDARD CONDITIONS*	14.196 SCF	.402 SCM
BWO	PERCENT MOISTURE BY VOLUME	10.83	10.83
FMD	MOLE FRACTION DRY GAS	.892	.892
PCO2	PERCENT CO2 BY VOL., DRY	14.35	14.35
PO2	PERCENT O2 BY VOL., DRY	1.90	1.90
PCO	PERCENT CO BY VOL., DRY	.00	.00
PN2	PERCENT N2 BY VOL., DRY	83.75	83.75
MD	MOLECULAR WT-DRY STACK GAS	30.37	30.37
MWS	MOLECULAR WT-STACK GAS	29.03	29.03

PB	BAROMETRIC PRESSURE	29.92	IN-HG	759.97	MM-HG
PSI	STATIC PRES OF STACK GAS	-1.38	IN-H2O	-35.05	MM-H2O
PS	STACK PRES, ABS.	29.82	IN-HG	757.39	MM-HG
TS	AVERAGE STACK TEMP	418.	F	214.	C
VS	AVG STACK GAS VELOCITY	112.0	FPS	34.2	MPS
AS	STACK AREA	9161.	SQ-IN	5.910	SQ-M
QSSTD	STACK FLOW RATE, DRY*	13711892.	SCFH	388280.	SCMH
QS	ACTUAL STACK FLOW RATE	25660428.	ACFH	726626.	ACMH
ISO	PERCENT ISOKINETIC	99.1		99.1	
MN	FILTERABLE-AMBIENT MG. EPA 5	80.4		80.4	
CS	FILTERABLE-AMBIENT	.0106	GR/DSCF*	24.297	MG/DSCM
MN	FILTERABLE-315 MG. EPA 5	56.2		56.2	
CS	FILTERABLE-315	.0074	GR/DSCF*	16.983	MG/DSCM

* 68 DEG F, 29.92 IN.HG.

EXAMPLE PARTICULATE CALCULATIONS TEST NO. 4CM58

FCC STACK

VOLUME OF DRY GAS SAMPLED AT STANDARD CONDITIONS

VMSTD = (17.647 * VM * Y * (PB + PM / 13.6)) / (TM + 460.)

$$VMSTD = \frac{17.647 * 120.094 * 1.001 * (29.92 + 3.200 / 13.6)}{(87. + 460.)} = 116.870 \text{ DSCF}$$

VOLUME OF WATER VAPOR AT STANDARD CONDITIONS

VWC = .04707 * VLC

VWC = .04707 * 302. = 14.20 SCF

PERCENT MOISTURE IN STACK GAS

BWO = (100. * VWC) / (VMSTD + VWC)

$$BWO = \frac{100. * 14.20}{116.870 + 14.20} = 10.83 \text{ PERCENT}$$

MOLE FRACTION OF DRY STACK GAS

FMD = (100. - BWO) / 100.

$$FMD = \frac{100. - 10.8}{100.} = .892$$

AVERAGE MOLECULAR WEIGHT OF DRY STACK GAS

MD = (PCO2 * .44) + (PO2 * .32) + (PN2 + PCO) * .28

MD = (14.35*44/100) + (1.9*32/100) + ((83.8+ .0) * 28/100 = 30.37

MOLECULAR WEIGHT OF STACK GAS

MWS = MD * (1. - (BWO/100)) + 18. * (BWO/100)

MWS = 30.37* (1. -(10.83/100)) + 18. * (10.83/100) = 29.03

STACK GAS VELOCITY AT STACK CONDITIONS

DELP = SUM. OF THE SQRT(VH * (TS + 460.))

VS = 85.49 * CP * DELP / (SQRT(MWS * PS) * PNTS)

VS = 85.49 * .84 * 550.877 / (SQRT(29.03 * 29.82) * 12. = 112.04 FPS

STACK GAS VOLUMETRIC FLOW AT STACK CONDITIONS

QS = VS * AS * 3600/144

QS = 112.04 * 9161. 3600/144 = 25660428. ACFH

STACK GAS VOLUMETRIC FLOW AT STANDARD CONDITIONS

QSSTD = 17.647 * QS * PS * (1. - (BWO/100)) / (TS + 460.)

$$QSSTD = \frac{17.647 * 25660428. * 29.82 * (1. - (10.83/100))}{(418. + 460.)} = 13711892. \text{ SCFH}$$

PERCENT ISOKINETIC

ISO = (305.58*(TS+460.))*((0.002669*VLC)+(VM*Y*(PB+(PM/13.6))/(TM+460.)))/(TT*VS*PS*DN*DN)

$$ISO = \frac{(305.58*(418.+460.))*((0.002669* 302.)+(120.094*1.001*(29.92+(3.200/13.6))/(87.+460.)))}{120. * 112.04 * 29.82 * .224 * .224} = 99.07 \text{ PERCENT}$$

PARTICULATE LOADING -- EPA METHOD 5 (AT STANDARD CONDITIONS)

CS = 0.001 * MN * 15.43 / VMSTD

CS = 0.001 * 80.4 * 15.43 / 116.870 = .0106 GR/DSCF

FIELD DATA

PLANT	PHILLIPS PETRO SWEENY	DATE	11/11/82
SAMPLING LOCATION	FCC STACK	RUN NUMBER	4DM5B
SAMPLE TYPE	M5	PROBE LENGTH & TYPE	6 FT GLASS
OPERATOR	PHILLIPS	NOZZLE : I.D.	.227
AMBIENT TEMP.(DEG.F)	75.	ASSUMED MOISTURE	12.0
BAR.PRESS.(IN.HG)	29.92	SAMPLE BOX NUMBER	
STATIC PRESS.(IN.H2O)	-1.38	METER BOX NUMBER	F82
FILTER NUMBER(S)	3450219	METER HEAD DIFF.	1.73
STACK INSIDE DIM.(IN)	108.00 .00		
PITOT TUBE COEFF.	.84	PROBE HEATER SETTING	320.
THERM. NO.		HEATER BOX SETTING	320.
LEAKAGE	.000 CFM @ 11.0 IN.HG		
METER CALIB. FACTOR	.986		

READ & RECORD DATA EVERY 10.0 MINUTES

TRAVERSE POINT NO.	SAMPLE TIME (MIN.)	CLOCK TIME (24-HR CLOCK)	GAS METER READING (CU.FT.)	VELOCITY HEAD (IN.H2O)	ORIFICE PRESSURE DIFFERENTIAL (IN.H2O) DESIRED	ACTUAL	STACK TEMP (DEG.F)	DRY GAS METER TEMP (DEG.F) INLET	OUTLET	PUMP VACUUM (IN.HG)	SAMPLE BOX TEMP (DEG.F)	IMPINGER TEMP (DEG.F)
INIT	0	1134	894.301									
	10.0	1144	904.160	2.400	3.10	3.10	423.	74.	76.	7.7	0.	76.
	20.0	1154	914.190	2.400	3.20	3.20	420.	79.	78.	8.0	0.	74.
	30.0	1204	924.150	2.400	3.20	3.20	419.	84.	79.	8.2	0.	74.
	40.0	1214	934.330	2.400	3.20	3.20	418.	87.	81.	8.2	0.	78.
	50.0	1224	944.390	2.400	3.20	3.20	418.	89.	81.	8.4	0.	86.
	60.0	1234	954.550	2.400	3.20	3.20	417.	90.	82.	8.4	0.	96.
	70.0	1244	964.640	2.400	3.20	3.20	417.	90.	82.	8.5	0.	88.
	80.0	1254	974.630	2.400	3.20	3.20	417.	90.	83.	8.5	0.	80.
	90.0	1304	984.720	2.400	3.20	3.20	417.	90.	84.	8.5	0.	82.
	100.0	1314	994.780	2.400	3.20	3.20	416.	90.	84.	9.0	0.	70.
	110.0	1324	4.810	2.400	3.20	3.20	418.	90.	84.	9.0	0.	78.
	120.0	1334	14.905	2.400	3.20	3.20	417.	90.	86.	9.5	0.	84.
TOTALS	120.0		120.604									
AVERAGE					3.19	3.19	418.	87.	82.	8.5	0.	81.

PARTICULATE FIELD DATA & RESULTS TABULATION

PLANT- NAME AND ADDRESS — TEST TEAM LEADER

PHILLIPS PETRO SWEENY — PHILLIPS

TEST 4DM58 FCC STACK

		ENGLISH UNITS	METRIC UNITS
TEST DATE		11/11/82	11/11/82
TB	TIME-START	1134	1134
TF	TIME-FINISH	1334	1334
TT	NET TIME OF TEST, MIN.	120.0	120.0
NP	NET SAMPLING POINTS	12	12
Y	METER CALIBRATION FACTOR	.986	.986
DN	SAMPLING NOZZLE DIAMETER	.227 IN	5.8 MM
CP	PITOT TUBE COEFFICIENT	.84	.84
PM	AVERAGE ORIFICE PRESSURE DROP	3.19 IN-H2O	81.1 MM-H2O
VM	VOLUME OF DRY GAS SAMPLED AT METER CONDITIONS	120.604 CU-FT	3.415 CU-M
TM	AVERAGE GAS METER TEMP	84.3 F	29.1 C
VMSTD	VOLUME OF DRY GAS SAMPLED AT STANDARD CONDITIONS*	116.261 SCF	3.292 SCM
VLC	TOTAL H2O COLLECTED IN IMPINGERS AND SILICA GEL,ML.	338.1	338.1
VWC	VOLUME OF WATER VAPOR AT STANDARD CONDITIONS*	15.914 SCF	.451 SCM
BWO	PERCENT MOISTURE BY VOLUME	12.04	12.04
FMD	MOLE FRACTION DRY GAS	.880	.880
PCO2	PERCENT CO2 BY VOL., DRY	14.35	14.35
PO2	PERCENT O2 BY VOL., DRY	1.90	1.90
PCO	PERCENT CO BY VOL., DRY	.00	.00
PN2	PERCENT N2 BY VOL., DRY	83.75	83.75
MD	MOLECULAR WT-DRY STACK GAS	30.37	30.37
MWS	MOLECULAR WT-STACK GAS	28.88	28.88

PB	BAROMETRIC PRESSURE	29.92	IN-HG	759.97	MM-HG
PSI	STATIC PRES OF STACK GAS	-1.38	IN-H2O	-35.05	MM-H2O
PS	STACK PRES, ABS.	29.82	IN-HG	757.39	MM-HG
TS	AVERAGE STACK TEMP	418.	F	214.	C
VS	AVG STACK GAS VELOCITY	112.3	FPS	34.2	MPS
AS	STACK AREA	9161.	SQ-IN	5.910	SQ-M
QSSTD	STACK FLOW RATE, DRY*	13560952.	SCFH	384006.	SCMH
QS	ACTUAL STACK FLOW RATE	25726784.	ACFH	728505.	ACMH
ISO	PERCENT ISOKINETIC	97.0		97.0	
MN	FILTERABLE-AMBIENT MG. EPA 5	97.9		97.9	
CS	FILTERABLE-AMBIENT	.0130	GR/DSCF*	29.740	MG/DSCM
MN	FILTERABLE-315 MG. EPA 5	57.2		57.2	
CS	FILTERABLE-315	.0076	GR/DSCF*	17.376	MG/DSCM

* 68 DEG F, 29.92 IN.HG.

EXAMPLE PARTICULATE CALCULATIONS TEST NO. 4DM5B

FCC STACK

VOLUME OF DRY GAS SAMPLED AT STANDARD CONDITIONS

VMSTD = (17.647 * VM * Y * (PB + PM / 13.6)) / (TM + 460.)

$$VMSTD = \frac{17.647 * 120.604 * .986 * (29.92 + 3.192 / 13.6)}{(84. + 460.)} = 116.261 \text{ DSCF}$$

VOLUME OF WATER VAPOR AT STANDARD CONDITIONS

VWC = .04707 * VLC

VWC = .04707 * 338. = 15.91 SCF

PERCENT MOISTURE IN STACK GAS

BWO = (100. * VWC) / (VMSTD + VWC)

$$BWO = \frac{100. * 15.91}{116.261 + 15.91} = 12.04 \text{ PERCENT}$$

MOLE FRACTION OF DRY STACK GAS

FMD = (100. - BWO) / 100.

$$FMD = \frac{100. - 12.0}{100.} = .880$$

AVERAGE MOLECULAR WEIGHT OF DRY STACK GAS

MD = (PCO2 * .44) + (PO2 * .32) + (PN2 + PCO) * .28

MD = (14.35*44/100) + (1.9*32/100) + ((83.8+ .0) * 28/100 = 30.37

MOLECULAR WEIGHT OF STACK GAS

MWS = MD * (1. - (BWO/100)) + 18. * (BWO/100)

MWS = 30.37* (1. -(12.04/100)) + 18. * (12.04/100) = 28.88

STACK GAS VELOCITY AT STACK CONDITIONS

DELP = SUM. OF THE SQRT(VH * (TS + 460.))

VS = 85.49 * CP * DELP / (SQRT(MWS * PS) * PNTS)

VS = 85.49 * .84 * 550.877 / (SQRT(28.88 * 29.82) * 12. = 112.33 FPS

STACK GAS VOLUMETRIC FLOW AT STACK CONDITIONS

QS = VS * AS * 3600/144

QS = 112.33 * 9161. 3600/144 = 25726784. ACFH

STACK GAS VOLUMETRIC FLOW AT STANDARD CONDITIONS

QSSTD = 17.647 * QS * PS * (1. - (BWO/100)) / (TS + 460.)

$$QSSTD = \frac{17.647 * 25726784. * 29.82 * (1. - (12.04/100))}{(418. + 460.)} = 13560952. \text{ SCFH}$$

PERCENT ISOKINETIC

ISO = (305.58*(TS+460.))*((0.002669*VLC)+(VM*Y*(PB+(PM/13.6))/(TM+460.)))/(TT*VS*PS*DN*DN)

$$ISO = \frac{(305.58*(418.+460.))*((0.002669* 338.)+(120.604* .986*(29.92+(3.192/13.6))/(84.+460.)))}{120. * 112.33 * 29.82 * .227 * .227} = 97.04 \text{ PERCENT}$$

PARTICULATE LOADING -- EPA METHOD 5 (AT STANDARD CONDITIONS)

CS = 0.001 * MN * 15.43 / VMSTD

CS = 0.001 * 97.9 * 15.43 / 116.261 = .0130 GR/DSCF

FIELD DATA

PLANT	PHILLIPS SWEENY	DATE	11/11/82
SAMPLING LOCATION	FCC STACK	RUN NUMBER	5AM5
SAMPLE TYPE	M5	PROBE LENGTH & TYPE	6' GLASS
OPERATOR	DO	NOZZLE : I.D.	.222
AMBIENT TEMP.(DEG.F)	80.	ASSUMED MOISTURE	8.0
BAR.PRESS.(IN.HG)	29.81	SAMPLE BOX NUMBER	
STATIC PRESS.(IN.H2O)	-1.38	METER BOX NUMBER	FB3
FILTER NUMBER(S)	3450107	METER HEAD DIFF.	2.00
STACK INSIDE DIM.(IN)	108.00 .00		
PITOT TUBE COEFF.	.84	PROBE HEATER SETTING	250.
THERM. NO.		HEATER BOX SETTING	250.
LEAKAGE	.006 CFM @ 10.5 IN.HG		
METER CALIB. FACTOR	1.006		

READ & RECORD DATA EVERY 10.0 MINUTES

TRAVERSE POINT NO.	SAMPLE TIME (MIN.)	CLOCK TIME (24-HR CLOCK)	GAS METER READING (CU.FT.)	VELOCITY HEAD (IN.H2O)	ORIFICE PRESSURE DIFFERENTIAL (IN.H2O) DESIRED	ORIFICE PRESSURE DIFFERENTIAL (IN.H2O) ACTUAL	STACK TEMP (DEG.F)	DRY GAS METER TEMP (DEG.F) INLET	DRY GAS METER TEMP (DEG.F) OUTLET	PUMP VACUUM (IN.HG)	SAMPLE BOX TEMP (DEG.F)	IMPINGER TEMP (DEG.F)
INIT	0	1532	608.891									
	10.0	0	617.540	1.900	2.91	2.91	413.	80.	80.	5.6	0.	0.
	20.0	0	626.160	1.900	2.90	2.90	413.	83.	80.	6.1	0.	89.
	30.0	0	634.780	1.900	2.93	2.93	413.	85.	80.	6.3	0.	111.
	40.0	0	643.440	1.900	2.94	2.94	413.	87.	80.	6.5	0.	121.
	50.0	0	652.050	1.900	2.94	2.94	413.	89.	80.	6.5	0.	105.
	60.0	0	660.670	1.900	2.94	2.94	413.	90.	80.	7.5	0.	97.
	70.0	0	669.140	1.850	2.86	2.86	412.	89.	80.	7.6	0.	92.
	80.0	0	677.470	1.900	2.94	2.94	413.	89.	80.	7.8	0.	89.
	90.0	1702	685.937	1.850	2.86	2.86	413.	89.	80.	8.0	0.	85.
TOTALS	90.0		77.046									
AVERAGE					2.91	2.91	413.	87.	80.	6.9	0.	88.

PARTICULATE FIELD DATA & RESULTS TABULATION

PLANT- NAME AND ADDRESS — TEST TEAM LEADER

PHILLIPS SWEENY — DO

TEST 5AM5 FCC STACK

		ENGLISH UNITS	METRIC UNITS
TEST DATE		11/11/82	11/11/82
TB	TIME-START	1532	1532
TF	TIME-FINISH	1702	1702
TT	NET TIME OF TEST, MIN.	90.0	90.0
NP	NET SAMPLING POINTS	9	9
Y	METER CALIBRATION FACTOR	1.006	1.006
DN	SAMPLING NOZZLE DIAMETER	.222 IN	5.6 MM
CP	PITOT TUBE COEFFICIENT	.84	.84
PM	AVERAGE ORIFICE PRESSURE DROP	2.91 IN-H2O	74.0 MM-H2O
VM	VOLUME OF DRY GAS SAMPLED AT METER CONDITIONS	77.046 CU-FT	2.182 CU-M
TM	AVERAGE GAS METER TEMP	83.4 F	28.5 C
VMSTD	VOLUME OF DRY GAS SAMPLED AT STANDARD CONDITIONS*	75.575 SCF	2.140 SCM
VLC	TOTAL H2O COLLECTED IN IMPINGERS AND SILICA GEL,ML.	140.7	140.7
VWC	VOLUME OF WATER VAPOR AT STANDARD CONDITIONS*	6.623 SCF	.188 SCM
BWO	PERCENT MOISTURE BY VOLUME	8.06	8.06
FMD	MOLE FRACTION DRY GAS	.919	.919
PCO2	PERCENT CO2 BY VOL., DRY	14.60	14.60
PO2	PERCENT O2 BY VOL., DRY	1.95	1.95
PCO	PERCENT CO BY VOL., DRY	.00	.00
PN2	PERCENT N2 BY VOL., DRY	83.45	83.45
MD	MOLECULAR WT-DRY STACK GAS	30.41	30.41
MWS	MOLECULAR WT-STACK GAS	29.41	29.41

PB	BAROMETRIC PRESSURE	29.81	IN-HG	757.17	MM-HG
PSI	STATIC PRES OF STACK GAS	-1.38	IN-H2O	-35.05	MM-H2O
PS	STACK PRES, ABS.	29.71	IN-HG	754.60	MM-HG
TS	AVERAGE STACK TEMP	413.	F	212.	C
VS	AVG STACK GAS VELOCITY	98.6	FPS	30.1	MPS
AS	STACK AREA	9161.	SQ-IN	5.910	SQ-M
QSSTD	STACK FLOW RATE, DRY*	12475086.	SCFH	353257.	SCMH
QS	ACTUAL STACK FLOW RATE	22590824.	ACFH	639704.	ACMH
ISO	PERCENT ISOKINETIC	95.6		95.6	
MN	FILTERABLE-AMBIENT MG. EPA 5	196.9		196.9	
CS	FILTERABLE-AMBIENT	.0402	GR/DSCF*	92.015	MG/DSCM
MN	FILTERABLE-160 MG. EPA 5	69.5		69.5	
CS	FILTERABLE-160	.0142	GR/DSCF*	32.479	MG/DSCM
MN	FILTERABLE-232 MG. EPA 5	55.7		55.7	
CS	FILTERABLE-232	.0114	GR/DSCF*	26.030	MG/DSCM
MN	FILTERABLE-315 MG. EPA 5	51.4		51.4	
CS	FILTERABLE-315	.0105	GR/DSCF*	24.020	MG/DSCM

* 68 DEG F, 29.92 IN.HG.

EXAMPLE PARTICULATE CALCULATIONS TEST NO. 5AM5

FCC STACK

VOLUME OF DRY GAS SAMPLED AT STANDARD CONDITIONS

VMSTD = (17.647 * VM * Y * (PB + PM / 13.6)) / (TM + 460.)

$$VMSTD = \frac{17.647 * 77.046 * 1.006 * (29.81 + 2.913 / 13.6)}{(83. + 460.)} = 75.575 \text{ DSCF}$$

VOLUME OF WATER VAPOR AT STANDARD CONDITIONS

VWC = .04707 * VLC

VWC = .04707 * 141. = 6.62 SCF

PERCENT MOISTURE IN STACK GAS

BWO = (100. * VWC) / (VMSTD + VWC)

$$BWO = \frac{100. * 6.62}{75.575 + 6.62} = 8.06 \text{ PERCENT}$$

MOLE FRACTION OF DRY STACK GAS

FMD = (100. - BWO) / 100.

$$FMD = \frac{100. - 8.1}{100.} = .919$$

AVERAGE MOLECULAR WEIGHT OF DRY STACK GAS

MD = (PCO2 * .44) + (PO2 * .32) + (PN2 + PCO) * .28

MD = (14.60*44/100) + (2.0*32/100) + ((83.4+ .0) * 28/100 = 30.41

MOLECULAR WEIGHT OF STACK GAS

MWS = MD * (1. - (BWO/100)) + 18. * (BWO/100)

MWS = 30.41* (1. -(8.06/100)) + 18. * (8.06/100) = 29.41

STACK GAS VELOCITY AT STACK CONDITIONS

DELP = SUM. OF THE SQRT(VH * (TS + 460.))

VS = 85.49 * CP * DELP / (SQRT(MWS * PS) * PNTS)

VS = 85.49 * .84 * 365.442 / (SQRT(29.41 * 29.71) * 9. = 98.64 FPS

STACK GAS VOLUMETRIC FLOW AT STACK CONDITIONS

QS = VS * AS * 3600/144

QS = 98.64 * 9161. 3600/144 = 22590824. ACFH

STACK GAS VOLUMETRIC FLOW AT STANDARD CONDITIONS

QSSTD = 17.647 * QS * PS * (1. - (BWO/100)) / (TS + 460.)

$$QSSTD = \frac{17.647 * 22590824. * 29.71 * (1. - (8.06/100))}{(413. + 460.)} = 12475086. \text{ SCFH}$$

PERCENT ISOKINETIC

ISO = (305.58*(TS+460.))*((0.002669*VLC)+(VM*Y*(PB+(PM/13.6))/(TM+460.)))/(TT*VS*PS*DN*DN)

$$ISO = \frac{(305.58*(413.+460.))*((0.002669* 141.)+(77.046*1.006*(29.81+(2.913/13.6))/(83.+460.)))}{90. * 98.64 * 29.71 * .222 * .222} = 95.59 \text{ PERCENT}$$

PARTICULATE LOADING -- EPA METHOD 5 (AT STANDARD CONDITIONS)

CS = 0.001 * MN * 15.43 / VMSTD

CS = 0.001 * 196.9 * 15.43 / 75.575 = .0402 GR/DSCF

FIELD DATA

PLANT	PHILLIPS SWEENEY	DATE	11/11/82
SAMPLING LOCATION	FCC STACK	RUN NUMBER	5BM5
SAMPLE TYPE	M5	PROBE LENGTH & TYPE	6' GLASS
OPERATOR	DO	NOZZLE : I.D.	.221
AMBIENT TEMP.(DEG.F)	80.	ASSUMED MOISTURE	8.0
BAR.PRESS.(IN.HG)	29.81	SAMPLE BOX NUMBER	
STATIC PRESS.(IN.H2O)	-1.38	METER BOX NUMBER	F85
FILTER NUMBER(S)	3450106	METER HEAD DIFF.	1.95
STACK INSIDE DIM.(IN)	108.00 .00		
PITOT TUBE COEFF.	.84	PROBE HEATER SETTING	250.
THERM. NO.		HEATER BOX SETTING	250.
LEAKAGE	.014 CFM @ 12.5 IN.HG		
METER CALIB. FACTOR	.988		

READ & RECORD DATA EVERY 10.0 MINUTES

TRAVERSE POINT NO.	SAMPLE TIME (MIN.)	CLOCK TIME (24-HR CLOCK)	GAS METER READING (CU.FT.)	VELOCITY HEAD (IN.H2O)	ORIFICE PRESSURE DIFFERENTIAL (IN.H2O) DESIRED	ACTUAL	STACK TEMP (DEG.F)	DRY GAS METER TEMP (DEG.F) INLET	OUTLET	PUMP VACUUM (IN.HG)	SAMPLE BOX TEMP (DEG.F)	IMPINGER TEMP (DEG.F)
INIT	0	1533	251.397									
	10.0	0	260.660	1.900	2.91	2.91	413.	85.	84.	10.8	0.	0.
	20.0	0	270.150	1.900	2.90	2.90	413.	81.	83.	9.9	0.	83.
	30.0	0	279.500	1.900	2.93	2.93	413.	94.	84.	9.7	0.	115.
	40.0	0	288.610	1.900	2.94	2.94	413.	94.	85.	9.8	0.	122.
	50.0	0	297.780	1.900	2.94	2.94	413.	94.	85.	10.3	0.	105.
	60.0	0	306.960	1.900	2.94	2.94	413.	97.	85.	10.7	0.	94.
	70.0	0	316.070	1.850	2.86	2.86	412.	97.	86.	10.8	0.	90.
	80.0	0	325.290	1.900	2.94	2.94	413.	97.	86.	11.2	0.	90.
	90.0	1703	334.459	1.850	2.86	2.86	413.	97.	86.	11.2	0.	90.
TOTALS	90.0		83.062									
AVERAGE					2.91	2.91	413.	93.	85.	10.5	0.	88.

PARTICULATE FIELD DATA & RESULTS TABULATION

PLANT- NAME AND ADDRESS — TEST TEAM LEADER

PHILLIPS SWEENEY — DO

TEST 5BM5 FCC STACK

		ENGLISH UNITS	METRIC UNITS
TEST DATE		11/11/82	11/11/82
TB	TIME-START	1533	1533
TF	TIME-FINISH	1703	1703
TT	NET TIME OF TEST, MIN.	90.0	90.0
NP	NET SAMPLING POINTS	9	9
Y	METER CALIBRATION FACTOR	.988	.988
DN	SAMPLING NOZZLE DIAMETER	.221 IN	5.6 MM
CP	PITOT TUBE COEFFICIENT	.84	.84
PM	AVERAGE ORIFICE PRESSURE DROP	2.91 IN-H2O	74.0 MM-H2O
VM	VOLUME OF DRY GAS SAMPLED AT METER CONDITIONS	83.062 CU-FT	2.352 CU-M
TM	AVERAGE GAS METER TEMP	88.9 F	31.6 C
VMSTD	VOLUME OF DRY GAS SAMPLED AT STANDARD CONDITIONS*	79.217 SCF	2.243 SCM
VLC	TOTAL H2O COLLECTED IN IMPINGERS AND SILICA GEL,ML.	136.0	136.0
VWC	VOLUME OF WATER VAPOR AT STANDARD CONDITIONS*	6.402 SCF	.181 SCM
BWO	PERCENT MOISTURE BY VOLUME	7.48	7.48
FMD	MOLE FRACTION DRY GAS	.925	.925
PCO2	PERCENT CO2 BY VOL., DRY	14.60	14.60
PO2	PERCENT O2 BY VOL., DRY	1.95	1.95
PCO	PERCENT CO BY VOL., DRY	.00	.00
PN2	PERCENT N2 BY VOL., DRY	83.45	83.45
MD	MOLECULAR WT-DRY STACK GAS	30.41	30.41
MWS	MOLECULAR WT-STACK GAS	29.49	29.49

PB	BAROMETRIC PRESSURE	29.81	IN-HG	757.17	MM-HG
PSI	STATIC PRES OF STACK GAS	-1.38	IN-H2O	-35.05	MM-H2O
PS	STACK PRES, ABS.	29.71	IN-HG	754.60	MM-HG
TS	AVERAGE STACK TEMP	413.	F	212.	C
VS	AVG STACK GAS VELOCITY	98.5	FPS	30.0	MPS
AS	STACK AREA	9161.	SQ-IN	5.910	SQ-M
QSSTD	STACK FLOW RATE, DRY*	12538470.	SCFH	355052.	SCMH
QS	ACTUAL STACK FLOW RATE	22563208.	ACFH	638922.	ACMH
ISO	PERCENT ISOKINETIC	100.6		100.6	
MN	FILTERABLE-AMBIENT MG. EPA 5	88.2		88.2	
CS	FILTERABLE-AMBIENT	.0172	GR/DSCF*	39.323	MG/DSCM
MN	FILTERABLE-160 MG. EPA 5	49.1		49.1	
CS	FILTERABLE-160	.0096	GR/DSCF*	21.891	MG/DSCM
MN	FILTERABLE-232 MG. EPA 5	43.7		43.7	
CS	FILTERABLE-232	.0085	GR/DSCF*	19.483	MG/DSCM
MN	FILTERABLE-315 MG. EPA 5	38.2		38.2	
CS	FILTERABLE-315	.0074	GR/DSCF*	17.031	MG/DSCM

* 68 DEG F, 29.92 IN.HG.

EXAMPLE PARTICULATE CALCULATIONS TEST NO. 58M5

FCC STACK

VOLUME OF DRY GAS SAMPLED AT STANDARD CONDITIONS

VMSTD = (17.647 * VM * Y * (PB + PM / 13.6)) / (TM + 460.)

$$VMSTD = \frac{17.647 * 83.062 * .988 * (29.81 + 2.913 / 13.6)}{(89. + 460.)} = 79.217 \text{ DSCF}$$

VOLUME OF WATER VAPOR AT STANDARD CONDITIONS

VWC = .04707 * VLC

VWC = .04707 * 136. = 6.40 SCF

PERCENT MOISTURE IN STACK GAS

BWO = (100. * VWC) / (VMSTD + VWC)

$$BWO = \frac{100. * 6.40}{79.217 + 6.40} = 7.48 \text{ PERCENT}$$

MOLE FRACTION OF DRY STACK GAS

FMD = (100. - BWO) / 100.

$$FMD = \frac{100. - 7.5}{100.} = .925$$

AVERAGE MOLECULAR WEIGHT OF DRY STACK GAS

MD = (PCO2 * .44) + (PO2 * .32) + (PN2 + PCO) * .28

MD = (14.60*44/100) + (2.0*32/100) + ((83.4+ .0) * 28/100 = 30.41

MOLECULAR WEIGHT OF STACK GAS

MWS = MD * (1. - (BWO/100)) + 18. * (BWO/100)

MWS = 30.41* (1. -(7.48/100)) + 18. * (7.48/100) = 29.49

STACK GAS VELOCITY AT STACK CONDITIONS

DELP = SUM. OF THE SQRT(VH * (TS + 460.))

VS = 85.49 * CP * DELP / (SQRT(MWS * PS) * PNTS)

VS = 85.49 * .84 * 365.442 / (SQRT(29.49 * 29.71) * 9. = 98.52 FPS

STACK GAS VOLUMETRIC FLOW AT STACK CONDITIONS

QS = VS * AS * 3600/144

QS = 98.52 * 9161. 3600/144 = 22563208. ACFH

STACK GAS VOLUMETRIC FLOW AT STANDARD CONDITIONS

QSSTD = 17.647 * QS * PS * (1. - (BWO/100)) / (TS + 460.)

$$QSSTD = \frac{17.647 * 22563208. * 29.71 * (1. - (7.48/100))}{(413. + 460.)} = 12538470. \text{ SCFH}$$

PERCENT ISOKINETIC

ISO = (305.58*(TS+460.))*((0.002669*VLC)+(VM*Y*(PB+(PM/13.6))/(TM+460.)))/(TT*VS*PS*DN*DN)

$$ISO = \frac{(305.58*(413.+460.))*((0.002669* 136.)+(83.062* .988*(29.81+(2.913/13.6))/(89.+460.)))}{90. * 98.52 * 29.71 * .221 * .221} = 100.59 \text{ PERCENT}$$

PARTICULATE LOADING -- EPA METHOD 5 (AT STANDARD CONDITIONS)

CS = 0.001 * MN * 15.43 / VMSTD

CS = 0.001 * 88.2 * 15.43 / 79.217 = .0172 GR/DSCF

FIELD DATA

PLANT	PHILLIPS PETRO SWEENY	DATE	11/11/82
SAMPLING LOCATION	FCC STACK	RUN NUMBER	5CM5W
SAMPLE TYPE	M5	PROBE LENGTH & TYPE	6 FT GLASS
OPERATOR	PHILLIPS	NOZZLE : I.D.	.224
AMBIENT TEMP.(DEG.F)	83.	ASSUMED MOISTURE	12.0
BAR.PRESS.(IN.HG)	29.81	SAMPLE BOX NUMBER	
STATIC PRESS.(IN.H2O)	-1.38	METER BOX NUMBER	FB7
FILTER NUMBER(S)	3450105	METER HEAD DIFF.	1.71
STACK INSIDE DIM.(IN)	108.00 .00		
PITOT TUBE COEFF.	.84	PROBE HEATER SETTING	250.
THERM. NO.		HEATER BOX SETTING	250.
LEAKAGE	.015 CFM @ 7.0 IN.HG		
METER CALIB. FACTOR	1.001		

READ & RECORD DATA EVERY 10.0 MINUTES

TRAVERSE POINT NO.	SAMPLE TIME (MIN.)	CLOCK TIME (24-HR CLOCK)	GAS METER READING (CU.FT.)	VELOCITY HEAD (IN.H2O)	ORIFICE PRESSURE DIFFERENTIAL (IN.H2O) DESIRED	ORIFICE PRESSURE DIFFERENTIAL (IN.H2O) ACTUAL	STACK TEMP (DEG.F)	DRY GAS METER TEMP (DEG.F) INLET	DRY GAS METER TEMP (DEG.F) OUTLET	PUMP VACUUM (IN.HG)	SAMPLE BOX TEMP (DEG.F)	IMPINGER TEMP (DEG.F)
INIT	0	1532	61.824									
	10.0	1542	71.940	2.400	3.20	3.20	416.	86.	84.	6.5	0.	78.
	20.0	1552	81.920	2.400	3.20	3.20	416.	86.	84.	5.5	0.	76.
	30.0	1602	91.950	2.400	3.20	3.20	416.	89.	83.	5.5	0.	86.
	40.0	1612	102.020	2.400	3.20	3.20	416.	91.	83.	5.5	0.	94.
	50.0	1622	112.050	2.400	3.20	3.20	416.	92.	84.	5.5	0.	80.
	60.0	1632	122.110	2.400	3.20	3.20	416.	94.	85.	5.5	0.	96.
	70.0	1642	132.190	2.400	3.20	3.20	415.	94.	86.	5.5	0.	106.
	80.0	1652	142.280	2.400	3.20	3.20	415.	94.	85.	5.5	0.	98.
	90.0	1702	152.292	2.400	3.20	3.20	415.	94.	85.	5.5	0.	86.
TOTALS	90.0		90.468									
AVERAGE					3.20	3.20	416.	91.	84.	5.6	0.	89.

PARTICULATE FIELD DATA & RESULTS TABULATION

PLANT- NAME AND ADDRESS — TEST TEAM LEADER

PHILLIPS PETRO SWEENY — PHILLIPS

TEST 5CM5W FCC STACK

		ENGLISH UNITS	METRIC UNITS
TEST DATE		11/11/82	11/11/82
TR	TIME-START	1532	1532
TF	TIME-FINISH	1702	1702
TT	NET TIME OF TEST, MIN.	90.0	90.0
NP	NET SAMPLING POINTS	9	9
Y	METER CALIBRATION FACTOR	1.001	1.001
DN	SAMPLING NOZZLE DIAMETER	.224 IN	5.7 MM
CP	PITOT TUBE COEFFICIENT	.84	.84
PM	AVERAGE ORIFICE PRESSURE DROP	3.20 IN-H20	81.3 MM-H20
VM	VOLUME OF DRY GAS SAMPLED AT METER CONDITIONS	90.468 CU-FT	2.562 CU-M
TM	AVERAGE GAS METER TEMP	87.7 F	31.0 C
VMSTD	VOLUME OF DRY GAS SAMPLED AT STANDARD CONDITIONS*	87.663 SCF	2.482 SCM
VLC	TOTAL H20 COLLECTED IN IMPINGERS AND SILICA GEL,ML.	288.8	288.8
VWC	VOLUME OF WATER VAPOR AT STANDARD CONDITIONS*	13.594 SCF	.385 SCM
BWO	PERCENT MOISTURE BY VOLUME	13.43	13.43
FMD	MOLE FRACTION DRY GAS	.866	.866
PCU2	PERCENT CO2 BY VOL., DRY	14.60	14.60
PO2	PERCENT O2 BY VOL., DRY	1.95	1.95
PCO	PERCENT CO BY VOL., DRY	.00	.00
PN2	PERCENT N2 BY VOL., DRY	83.45	83.45
MD	MOLECULAR WT-DRY STACK GAS	30.41	30.41
MWS	MOLECULAR WT-STACK GAS	28.75	28.75

PB	BAROMETRIC PRESSURE	29.81	IN-HG	757.17	MM-HG
PSI	STATIC PRES OF STACK GAS	-1.38	IN-H2O	-35.05	MM-H2O
PS	STACK PRES, ABS.	29.71	IN-HG	754.60	MM-HG
TS	AVERAGE STACK TEMP	416.	F	213.	C
VS	AVG STACK GAS VELOCITY	112.6	FPS	34.3	MPS
AS	STACK AREA	9161.	SQ-IN	5.910	SQ-M
QSSTD	STACK FLOW RATE, DRY*	13372482.	SCFH	378669.	SCMH
QS	ACTUAL STACK FLOW RATE	25799232.	ACFH	730557.	ACMH
ISO	PERCENT ISOKINETIC	101.6		101.6	

* 68 DEG F, 29.92 IN.HG.

EXAMPLE PARTICULATE CALCULATIONS TEST NO. 5CMSW

FCC STACK

VOLUME OF DRY GAS SAMPLED AT STANDARD CONDITIONS

VMSTD = (17.647 * VM * Y * (PB + PM / 13.6)) / (TM + 460.)

$$VMSTD = \frac{17.647 * 90.468 * 1.001 * (29.81 + 3.200 / 13.6)}{(88. + 460.)} = 87.663 \text{ DSCF}$$

VOLUME OF WATER VAPOR AT STANDARD CONDITIONS

VWC = .04707 * VLC

VWC = .04707 * 289. = 13.59 SCF

PERCENT MOISTURE IN STACK GAS

BWO = (100. * VWC) / (VMSTD + VWC)

$$BWO = \frac{100. * 13.59}{87.663 + 13.59} = 13.43 \text{ PERCENT}$$

MOLE FRACTION OF DRY STACK GAS

FMD = (100. - BWO) / 100.

$$FMD = \frac{100. - 13.4}{100.} = .866$$

AVERAGE MOLECULAR WEIGHT OF DRY STACK GAS

MD = (PCO2 * .44) + (PO2 * .32) + (PN2 + PCO) * .28

MD = (14.60*44/100) + (2.0*32/100) + ((83.4+ .0) * 28/100 = 30.41

MOLECULAR WEIGHT OF STACK GAS

MWS = MD * (1. - (BWO/100)) + 18. * (BWO/100)

MWS = 30.41* (1. -(13.43/100)) + 18. * (13.43/100) = 28.75

STACK GAS VELOCITY AT STACK CONDITIONS

DELP = SUM. OF THE SQRT(VH * (TS + 460.))

VS = 85.49 * CP * DELP / (SQRT(MWS * PS) * PNTS)

VS = 85.49 * .84 * 412.589 / (SQRT(28.75 * 29.71) * 9. = 112.65 FPS

STACK GAS VOLUMETRIC FLOW AT STACK CONDITIONS

QS = VS * AS * 3600/144

QS = 112.65 * 9161. 3600/144 = 25799232. ACFH

STACK GAS VOLUMETRIC FLOW AT STANDARD CONDITIONS

QSSTD = 17.647 * QS * PS * (1. - (BWO/100)) / (TS + 460.)

$$QSSTD = \frac{17.647 * 25799232. * 29.71 * (1. - (13.43/100))}{(416. + 460.)} = 13372482. \text{ SCFH}$$

PERCENT ISOKINETIC

ISO = (305.58*(TS+460.))*((0.002669*VLC)+(VM*Y*(PB+(PM/13.6))/(TM+460.)))/(TT*VS*PS*DN*DN)

$$ISO = \frac{(305.58*(416.+460.))*((0.002669* 289.)+(90.468*1.001*(29.81+(3.200/13.6))/(88.+460.)))}{90. * 112.65 * 29.71 * .224 * .224} = 101.60 \text{ PERCENT}$$

PARTICULATE LOADING -- EPA METHOD 5 (AT STANDARD CONDITIONS)

CS = 0.001 * MN * 15.43 / VMSTD

CS = 0.001 * 0.0000E+00 * 15.43 / 87.663 = 0.0000E+00 GR/DSCF

FIELD DATA

PLANT	PHILLIPS PETRO SWEENY	DATE	11/11/82
SAMPLING LOCATION	FCC OUTLET	RUN NUMBER	5DM5W
SAMPLE TYPE	M5	PROBE LENGTH & TYPE	6 FT GLASS
OPERATOR	PHILLIPS	NUZZLE : I.D.	.225
AMBIENT TEMP.(DEG.F)	83.	ASSUMED MOISTURE	12.0
BAR.PRESS.(IN.HG)	29.81	SAMPLE BOX NUMBER	
STATIC PRESS.(IN.H2O)	-1.38	METER BOX NUMBER	FB2
FILTER NUMBER(S)	3450104	METER HEAD DIFF.	1.73
STACK INSIDE DIM.(IN)	108.00 .00		
PITOT TUBE COEFF.	.84	PROBE HEATER SETTING	250.
THERM. NO.		HEATER BOX SETTING	250.
LEAKAGE	.000 CFM @ 8.0 IN.HG		
METER CALIB. FACTOR	.986		

READ & RECORD DATA EVERY 10.0 MINUTES

TRAVERSE POINT NO.	SAMPLE TIME (MIN.)	CLOCK TIME (24-HR CLOCK)	GAS METER READING (CU.FT.)	VELOCITY HEAD (IN.H2O)	ORIFICE PRESSURE DIFFERENTIAL (IN.H2O) DESIRED	ORIFICE PRESSURE DIFFERENTIAL (IN.H2O) ACTUAL	STACK TEMP (DEG.F)	DRY GAS METER TEMP (DEG.F) INLET	DRY GAS METER TEMP (DEG.F) OUTLET	PUMP VACUUM (IN.HG)	SAMPLE BOX TEMP (DEG.F)	IMPINGER TEMP (DEG.F)
INIT	0	1534	15.226									
	10.0	1544	25.340	2.400	3.20	3.20	416.	78.	80.	7.0	0.	78.
	20.0	1554	35.290	2.400	3.20	3.20	416.	80.	80.	6.5	0.	66.
	30.0	1604	45.260	2.400	3.20	3.20	416.	84.	80.	6.0	0.	70.
	40.0	1614	55.300	2.400	3.20	3.20	416.	86.	80.	6.2	0.	74.
	50.0	1624	65.370	2.400	3.20	3.20	416.	88.	82.	6.2	0.	74.
	60.0	1634	75.470	2.400	3.20	3.20	416.	90.	82.	6.2	0.	78.
	70.0	1644	85.710	2.400	3.20	3.20	415.	90.	83.	6.4	0.	84.
	80.0	1654	95.900	2.400	3.20	3.20	415.	90.	83.	6.4	0.	84.
	90.0	1704	105.882	2.400	3.20	3.20	415.	90.	83.	6.4	0.	76.
TOTALS	90.0		90.656									
AVERAGE					3.20	3.20	416.	86.	81.	6.4	0.	76.

PARTICULATE FIELD DATA & RESULTS TABULATION

PLANT- NAME AND ADDRESS — TEST TEAM LEADER

PHILLIPS PETRO SWEENY — PHILLIPS

TEST 5DM5W FCC OUTLET

		ENGLISH UNITS	METRIC UNITS
TEST DATE		11/11/82	11/11/82
TB	TIME-START	1534	1534
TF	TIME-FINISH	1704	1704
TT	NET TIME OF TEST, MIN.	90.0	90.0
NP	NET SAMPLING POINTS	9	9
Y	METER CALIBRATION FACTOR	.986	.986
DN	SAMPLING NOZZLE DIAMETER	.225 IN	5.7 MM
CP	PITOT TUBE COEFFICIENT	.84	.84
PM	AVERAGE ORIFICE PRESSURE DROP	3.20 IN-H2O	81.3 MM-H2O
VM	VOLUME OF DRY GAS SAMPLED AT METER CONDITIONS	90.656 CU-FT	2.567 CU-M
TM	AVERAGE GAS METER TEMP	83.8 F	28.8 C
VMSTD	VOLUME OF DRY GAS SAMPLED AT STANDARD CONDITIONS*	87.148 SCF	2.468 SCM
VLC	TOTAL H2O COLLECTED IN IMPINGERS AND SILICA GEL,ML.	301.9	301.9
VWC	VOLUME OF WATER VAPOR AT STANDARD CONDITIONS*	14.210 SCF	.402 SCM
BWO	PERCENT MOISTURE BY VOLUME	14.02	14.02
FMD	MOLE FRACTION DRY GAS	.860	.860
PCO2	PERCENT CO2 BY VOL., DRY	14.60	14.60
PO2	PERCENT O2 BY VOL., DRY	1.95	1.95
PCO	PERCENT CO BY VOL., DRY	.00	.00
PN2	PERCENT N2 BY VOL., DRY	83.45	83.45
MD	MOLECULAR WT-DRY STACK GAS	30.41	30.41
MWS	MOLECULAR WT-STACK GAS	28.67	28.67

PB	BAROMETRIC PRESSURE	29.81	IN-HG	757.17	MM-HG
PSI	STATIC PRES OF STACK GAS	-1.38	IN-H2O	-35.05	MM-H2O
PS	STACK PRES, ABS.	29.71	IN-HG	754.60	MM-HG
TS	AVERAGE STACK TEMP	416.	F	213.	C
VS	AVG STACK GAS VELOCITY	112.8	FPS	34.4	MPS
AS	STACK AREA	9161.	SQ-IN	5.910	SQ-M
QSSTD	STACK FLOW RATE, DRY*	13297674.	SCFH	376550.	SCMH
QS	ACTUAL STACK FLOW RATE	25832436.	ACFH	731497.	ACMH
ISO	PERCENT ISOKINETIC	101.0		101.0	

* 68 DEG F, 29.92 IN.HG.

EXAMPLE PARTICULATE CALCULATIONS TEST NO. 5DM5W

FCC OUTLET

VOLUME OF DRY GAS SAMPLED AT STANDARD CONDITIONS

VMSTD = (17.647 * VM * Y * (PB + PM / 13.6)) / (TM + 460.)

$$VMSTD = \frac{17.647 * 90.656 * .986 * (29.81 + 3.200 / 13.6)}{(84. + 460.)} = 87.148 \text{ DSCF}$$

VOLUME OF WATER VAPOR AT STANDARD CONDITIONS

VWC = .04707 * VLC

VWC = .04707 * 302. = 14.21 SCF

PERCENT MOISTURE IN STACK GAS

BWO = (100. * VWC) / (VMSTD + VWC)

$$BWO = \frac{100. * 14.21}{87.148 + 14.21} = 14.02 \text{ PERCENT}$$

MOLE FRACTION OF DRY STACK GAS

FMD = (100. - BWO) / 100.

$$FMD = \frac{100. - 14.0}{100.} = .860$$

AVERAGE MOLECULAR WEIGHT OF DRY STACK GAS

MD = (PCO2 * .44) + (PO2 * .32) + (PN2 + PCO) * .28

MD = (14.60*44/100) + (2.0*32/100) + ((83.4+ .0) * 28/100 = 30.41

MOLECULAR WEIGHT OF STACK GAS

MWS = MD * (1. - (BWO/100)) + 18. * (BWO/100)

MWS = 30.41* (1. -(14.02/100)) + 18. * (14.02/100) = 28.67

STACK GAS VELOCITY AT STACK CONDITIONS

DELP = SUM. OF THE SQRT(VH * (TS + 460.))

VS = 85.49 * CP * DELP / (SQRT(MWS * PS) * PNTS)

VS = 85.49 * .84 * 412.589 / (SQRT(28.67 * 29.71) * 9. = 112.79 FPS

STACK GAS VOLUMETRIC FLOW AT STACK CONDITIONS

QS = VS * AS * 3600/144

QS = 112.79 * 9161. 3600/144 = 25832436. ACFH

STACK GAS VOLUMETRIC FLOW AT STANDARD CONDITIONS

QSSTD = 17.647 * QS * PS * (1. - (BWO/100)) / (TS + 460.)

$$QSSTD = \frac{17.647 * 25832436. * 29.71 * (1. - (14.02/100))}{(416. + 460.)} = 13297674. \text{ SCFH}$$

PERCENT ISOKINETIC

ISO = (305.58*(TS+460.))*((0.002669*VLC)+(VM*Y*(PB+(PM/13.6))/(TM+460.)))/(TT*VS*PS*DN*DN)

$$ISO = \frac{(305.58*(416.+460.))*((0.002669*302.)+(90.656*.986*(29.81+(3.200/13.6))/(84.+460.)))}{90. * 112.79 * 29.71 * .225 * .225} = 101.03 \text{ PERCENT}$$

PARTICULATE LOADING -- EPA METHOD 5 (AT STANDARD CONDITIONS)

CS = 0.001 * MN * 15.43 / VMSTD

CS = 0.001 * 0.0000E+00 * 15.43 / 87.148 = 0.0000E+00 GR/DSCF

FIELD DATA

PLANT	PHILLIPS SWEENY	DATE	11/12/82
SAMPLING LOCATION	FCC STACK	RUN NUMBER	6AM545
SAMPLE TYPE	M5-450	PROBE LENGTH & TYPE	6' GLASS
OPERATOR	DD	NOZZLE : I.D.	.219
AMBIENT TEMP.(DEG.F)	75.	ASSUMED MOISTURE	8.0
BAR.PRESS.(IN.HG)	30.02	SAMPLE BOX NUMBER	
STATIC PRESS.(IN.H2O)	-1.38	METER BOX NUMBER	F83
FILTER NUMBER(S)	3450226	METER HEAD DIFF.	2.00
STACK INSIDE DIM.(IN)	108.00 .00		
PITOT TUBE COEFF.	.84	PROBE HEATER SETTING	450.
THERM. NO.		HEATER BOX SETTING	450.
LEAKAGE	.004 CFM @ 12.0 IN.HG		
METER CALIB. FACTOR	1.006		
READ & RECORD DATA EVERY	10.0 MINUTES		

TRAVERSE POINT NO.	SAMPLE TIME (MIN.)	CLOCK TIME (24-HR CLOCK)	GAS METER READING (CU.FT.)	VELOCITY HEAD (IN.H2O)	ORIFICE PRESSURE DIFFERENTIAL (IN.H2O) DESIRED	ACTUAL	STACK TEMP (DEG.F)	DRY GAS METER TEMP (DEG.F) INLET	OUTLET	PUMP VACUUM (IN.HG)	SAMPLE BOX TEMP (DEG.F)	IMPINGER TEMP (DEG.F)
INIT	0	1107	685.934									
	10.0	0	694.360	1.950	2.92	2.92	419.	74.	73.	10.3	0.	0.
	20.0	0	702.950	1.900	2.88	2.88	419.	85.	77.	10.0	0.	0.
	30.0	0	711.580	1.900	2.90	2.90	419.	89.	80.	9.6	0.	0.
	40.0	0	720.200	1.900	2.91	2.91	419.	91.	81.	9.2	0.	0.
	50.0	0	728.620	1.950	3.00	3.00	419.	94.	81.	9.0	0.	126.
	60.0	0	737.070	1.950	3.01	3.01	419.	97.	81.	8.9	0.	95.
	70.0	0	745.610	1.950	3.03	3.03	419.	97.	81.	9.7	0.	87.
	80.0	0	754.130	1.950	3.04	3.04	419.	98.	82.	10.0	0.	0.
	90.0	0	762.590	1.900	2.96	2.96	419.	96.	83.	10.3	0.	0.
	100.0	0	771.100	1.950	3.03	3.03	419.	95.	83.	11.1	0.	92.
	110.0	0	779.620	1.950	3.00	3.00	419.	95.	83.	11.2	0.	0.
	120.0	1340	787.942	1.900	2.95	2.95	419.	95.	84.	11.3	0.	99.
TOTALS	120.0		102.008									
AVERAGE					2.97	2.97	419.	92.	81.	10.1	0.	42.

PARTICULATE FIELD DATA & RESULTS TABULATION

PLANT- NAME AND ADDRESS TEST TEAM LEADER

PHILLIPS SWEENY DO

TEST 6AM545 FCC STACK

		ENGLISH UNITS	METRIC UNITS
TEST DATE		11/12/82	11/12/82
TB	TIME-START	1107	1107
TF	TIME-FINISH	1340	1340
TT	NET TIME OF TEST, MIN.	120.0	120.0
NP	NET SAMPLING POINTS	12	12
Y	METER CALIBRATION FACTOR	1.006	1.006
DN	SAMPLING NOZZLE DIAMETER	.219 IN	5.6 MM
CP	PITOT TUBE COEFFICIENT	.84	.84
PM	AVERAGE ORIFICE PRESSURE DROP	2.97 IN-H2O	75.4 MM-H2O
VM	VOLUME OF DRY GAS SAMPLED AT METER CONDITIONS	102.008 CU-FT	2.889 CU-M
TM	AVERAGE GAS METER TEMP	86.5 F	30.3 C
VMSTD	VOLUME OF DRY GAS SAMPLED AT STANDARD CONDITIONS*	100.208 SCF	2.838 SCM
VLC	TOTAL H2O COLLECTED IN IMPINGERS AND SILICA GEL,ML.	146.0	146.0
VWC	VOLUME OF WATER VAPOR AT STANDARD CONDITIONS*	6.872 SCF	.195 SCM
BWO	PERCENT MOISTURE BY VOLUME	6.42	6.42
FMD	MOLE FRACTION DRY GAS	.936	.936
PCO2	PERCENT CO2 BY VOL., DRY	14.55	14.55
PO2	PERCENT O2 BY VOL., DRY	2.15	2.15
PCO	PERCENT CO BY VOL., DRY	.00	.00
PN2	PERCENT N2 BY VOL., DRY	83.30	83.30
MD	MOLECULAR WT-DRY STACK GAS	30.41	30.41
MWS	MOLECULAR WT-STACK GAS	29.62	29.62

PB	BAROMETRIC PRESSURE	30.02	IN-HG	762.51	MM-HG
PSI	STATIC PRES OF STACK GAS	-1.38	IN-H2O	-35.05	MM-H2O
PS	STACK PRES, ABS.	29.92	IN-HG	759.93	MM-HG
TS	AVERAGE STACK TEMP	419.	F	215.	C
VS	AVG STACK GAS VELOCITY	99.3	FPS	30.3	MPS
AS	STACK AREA	9161.	SQ-IN	5.910	SQ-M
QSSTD	STACK FLOW RATE, DRY*	12788366.	SCFH	362128.	SCMH
QS	ACTUAL STACK FLOW RATE	22750952.	ACFH	644239.	ACMH
ISO	PERCENT ISOKINETIC	95.3		95.3	
MN	FILTERABLE-AMBIENT MG. EPA 5	59.1		59.1	
CS	FILTERABLE-AMBIENT	.0091	GR/DSCF*	20.829	MG/DSCM
MN	FILTERABLE-232 MG. EPA 5	46.7		46.7	
CS	FILTERABLE-232	.0072	GR/DSCF*	16.459	MG/DSCM
MN	FILTERABLE-315 MG. EPA 5	43.6		43.6	
CS	FILTERABLE-315	.0067	GR/DSCF*	15.367	MG/DSCM

* 68 DEG F, 29.92 IN.HG.

EXAMPLE PARTICULATE CALCULATIONS TEST NO.6AM545

FCC STACK

VOLUME OF DRY GAS SAMPLED AT STANDARD CONDITIONS

VMSTD = (17.647 * VM * Y * (PB + PM / 13.6)) / (TM + 460.)

$$VMSTD = \frac{17.647 * 102.008 * 1.006 * (30.02 + 2.969 / 13.6)}{(86. + 460.)} = 100.208 \text{ DSCF}$$

VOLUME OF WATER VAPOR AT STANDARD CONDITIONS

VWC = .04707 * VLC

VWC = .04707 * 146. = 6.87 SCF

PERCENT MOISTURE IN STACK GAS

BWO = (100. * VWC) / (VMSTD + VWC)

$$BWO = \frac{100. * 6.87}{100.208 + 6.87} = 6.42 \text{ PERCENT}$$

MOLE FRACTION OF DRY STACK GAS

FMD = (100. - BWO) / 100.

$$FMD = \frac{100. - 6.4}{100.} = .936$$

AVERAGE MOLECULAR WEIGHT OF DRY STACK GAS

MD = (PCO2 * .44) + (PO2 * .32) + (PN2 + PCO) * .28

MD = (14.55*44/100) + (2.2*32/100) + ((83.3+ .0) * 28/100 = 30.41

MOLECULAR WEIGHT OF STACK GAS

MWS = MD * (1. - (BWO/100)) + 18. * (BWO/100)

MWS = 30.41* (1. -(6.42/100)) + 18. * (6.42/100) = 29.62

STACK GAS VELOCITY AT STACK CONDITIONS

DELP = SUM. OF THE SQRT(VH * (TS + 460.))

VS = 85.49 * CP * DELP / (SQRT(MWS * PS) * PNTS)

VS = 85.49 * .84 * 494.142 / (SQRT(29.62 * 29.92) * 12. = 99.34 FPS

STACK GAS VOLUMETRIC FLOW AT STACK CONDITIONS

QS = VS * AS * 3600/144

QS = 99.34 * 9161. 3600/144 = 22750952. ACFH

STACK GAS VOLUMETRIC FLOW AT STANDARD CONDITIONS

QSSTD = 17.647 * QS * PS * (1. - (BWO/100)) / (TS + 460.)

$$QSSTD = \frac{17.647 * 22750952. * 29.92 * (1. - (6.42/100))}{(419. + 460.)} = 12788366. \text{ SCFH}$$

PERCENT ISOKINETIC

ISO = (305.58*(TS+460.))*((0.002669*VLC)+(VM*Y*(PB+(PM/13.6))/(TM+460.)))/(TT*VS*PS*DN*DN)

$$ISO = \frac{(305.58*(419.+460.))*((0.002669*146.)+(102.008*1.006*(30.02+(2.969/13.6))/(86.+460.)))}{120. * 99.34 * 29.92 * .219 * .219} = 95.29 \text{ PERCENT}$$

PARTICULATE LOADING -- EPA METHOD 5 (AT STANDARD CONDITIONS)

CS = 0.001 * MN * 15.43 / VMSTD

CS = 0.001 * 59.1 * 15.43 / 100.208 = .0091 GR/DSCF

FIELD DATA

PLANT	PHILLIPS SWEENY	DATE	11/12/82
SAMPLING LOCATION	FCC STACK	RUN NUMBER	6BM545
SAMPLE TYPE	M5-450	PROBE LENGTH & TYPE	6' GLASS
OPERATOR	DO	NOZZLE : I.D.	.223
AMBIENT TEMP.(DEG.F)	75.	ASSUMED MOISTURE	8.0
BAR.PRESS.(IN.HG)	30.02	SAMPLE BOX NUMBER	
STATIC PRESS.(IN.H2O)	-1.38	METER BOX NUMBER	F85
FILTER NUMBER(S)	3450216	METER HEAD DIFF.	1.95
STACK INSIDE DIM.(IN)	108.00 .00		
PITOT TUBE COEFF.	.84	PROBE HEATER SETTING	450.
THERM. NO.		HEATER BOX SETTING	450.
LEAKAGE	.016 CFM @ 10.0 IN.HG		
METER CALIB. FACTOR	.988		

READ & RECORD DATA EVERY 10.0 MINUTES

TRAVERSE POINT NO.	SAMPLE TIME (MIN.)	CLOCK TIME (24-HR CLOCK)	GAS METER READING (CU.FT.)	VELOCITY HEAD (IN.H2O)	ORIFICE PRESSURE DIFFERENTIAL (IN.H2O) DESIRED	ORIFICE PRESSURE DIFFERENTIAL (IN.H2O) ACTUAL	STACK TEMP (DEG.F)	DRY GAS METER TEMP (DEG.F) INLET	DRY GAS METER TEMP (DEG.F) OUTLET	PUMP VACUUM (IN.HG)	SAMPLE BOX TEMP (DEG.F)	IMPINGER TEMP (DEG.F)
INIT	0	1111	339.140									
	10.0	0	348.460	1.950	2.92	2.92	419.	82.	81.	17.2	0.	0.
	20.0	0	357.800	1.900	2.90	2.90	419.	90.	83.	6.5	0.	0.
	30.0	0	366.910	1.900	2.91	2.91	419.	94.	84.	6.2	0.	0.
	40.0	0	376.180	1.950	3.00	3.00	419.	100.	86.	6.6	0.	126.
	50.0	0	385.450	1.950	3.01	3.01	419.	105.	89.	6.7	0.	112.
	60.0	0	394.850	1.950	3.03	3.03	419.	108.	91.	6.9	0.	108.
	70.0	0	404.380	1.950	3.04	3.04	419.	109.	94.	7.2	0.	0.
	80.0	0	413.800	1.900	2.96	2.96	419.	108.	95.	7.2	0.	0.
	90.0	0	423.340	1.950	3.03	3.03	419.	107.	95.	7.2	0.	116.
	100.0	0	432.810	1.950	3.00	3.00	419.	107.	95.	7.3	0.	0.
	110.0	0	442.180	1.900	2.95	2.95	419.	105.	94.	7.5	0.	116.
	120.0	1349	451.520	1.900	2.95	2.95	419.	105.	93.	7.8	0.	0.
TOTALS	120.0		112.380									
AVERAGE					2.97	2.97	419.	102.	90.	7.9	0.	48.

PARTICULATE FIELD DATA & RESULTS TABULATION

PLANT- NAME AND ADDRESS — TEST TEAM LEADER

PHILLIPS SWEENY — DO

TEST 68M545 FCC STACK

		ENGLISH UNITS	METRIC UNITS
TEST DATE		11/12/82	11/12/82
TB	TIME-START	1111	1111
TF	TIME-FINISH	1349	1349
TT	NET TIME OF TEST, MIN.	120.0	120.0
NP	NET SAMPLING POINTS	12	12
Y	METER CALIBRATION FACTOR	.988	.988
DN	SAMPLING NOZZLE DIAMETER	.223 IN	5.7 MM
CP	PITOT TUBE COEFFICIENT	.84	.84
PM	AVERAGE ORIFICE PRESSURE DROP	2.97 IN-H2O	75.6 MM-H2O
VM	VOLUME OF DRY GAS SAMPLED AT METER CONDITIONS	112.380 CU-FT	3.182 CU-M
TM	AVERAGE GAS METER TEMP	95.8 F	35.5 C
VMSTD	VOLUME OF DRY GAS SAMPLED AT STANDARD CONDITIONS*	106.595 SCF	3.018 SCM
VLC	TOTAL H2O COLLECTED IN IMPINGERS AND SILICA GEL,ML.	70.9	70.9
VWC	VOLUME OF WATER VAPOR AT STANDARD CONDITIONS*	3.337 SCF	.095 SCM
BWO	PERCENT MOISTURE BY VOLUME	3.04	3.04
FMD	MOLE FRACTION DRY GAS	.970	.970
PCO2	PERCENT CO2 BY VOL., DRY	14.55	14.55
PO2	PERCENT O2 BY VOL., DRY	2.15	2.15
PCO	PERCENT CO BY VOL., DRY	.00	.00
PN2	PERCENT N2 BY VOL., DRY	83.30	83.30
MD	MOLECULAR WT-DRY STACK GAS	30.41	30.41
MWS	MOLECULAR WT-STACK GAS	30.04	30.04

PB	BAROMETRIC PRESSURE	30.02	IN-HG	762.51	MM-HG
PSI	STATIC PRES OF STACK GAS	-1.38	IN-H20	-35.05	MM-H20
PS	STACK PRES, ABS.	29.92	IN-HG	759.93	MM-HG
TS	AVERAGE STACK TEMP	419.	F	215.	C
VS	AVG STACK GAS VELOCITY	98.6	FPS	30.1	MPS
AS	STACK AREA	9161.	SQ-IN	5.910	SQ-M
QSSTD	STACK FLOW RATE, DRY*	13157606.	SCFM	372584.	SCMM
QS	ACTUAL STACK FLOW RATE	22591388.	ACFM	639720.	ACMM
ISO	PERCENT ISOKINETIC	95.0		95.0	
MN	FILTERABLE-AMBIENT MG. EPA 5	74.5		74.5	
CS	FILTERABLE-AMBIENT	.0108	GR/DSCF*	24.684	MG/DSCM
MN	FILTERABLE-232 MG. EPA 5	52.3		52.3	
CS	FILTERABLE-232	.0076	GR/DSCF*	17.328	MG/DSCM
MN	FILTERABLE-315 MG. EPA 5	48.4		48.4	
CS	FILTERABLE-315	.0070	GR/DSCF*	16.036	MG/DSCM

* 68 DEG F, 29.92 IN.HG.

EXAMPLE PARTICULATE CALCULATIONS TEST NO.6BM545

FCC STACK

VOLUME OF DRY GAS SAMPLED AT STANDARD CONDITIONS

VMSTD = (17.647 * VM * Y * (PB + PM / 13.6)) / (TM + 460.)

$$VMSTD = \frac{17.647 * 112.380 * .988 * (30.02 + 2.975 / 13.6)}{(96. + 460.)} = 106.595 \text{ DSCF}$$

VOLUME OF WATER VAPOR AT STANDARD CONDITIONS

VWC = .04707 * VLC

VWC = .04707 * 71. = 3.34 SCF

PERCENT MOISTURE IN STACK GAS

BWO = (100. * VWC) / (VMSTD + VWC)

$$BWO = \frac{100. * 3.34}{106.595 + 3.34} = 3.04 \text{ PERCENT}$$

MOLE FRACTION OF DRY STACK GAS

FMD = (100. - BWO) / 100.

$$FMD = \frac{100. - 3.0}{100.} = .970$$

AVERAGE MOLECULAR WEIGHT OF DRY STACK GAS

MD = (PCO2 * .44) + (PO2 * .32) + (PN2 + PCO) * .28

MD = (14.55*44/100) + (2.2*32/100) + ((83.3+ .0) * 28/100 = 30.41

MOLECULAR WEIGHT OF STACK GAS

MWS = MD * (1. - (BWO/100)) + 18. * (BWO/100)

MWS = 30.41* (1. -(3.04/100)) + 18. * (3.04/100) = 30.04

STACK GAS VELOCITY AT STACK CONDITIONS

DELP = SUM. OF THE SQRT(VH * (TS + 460.))

VS = 85.49 * CP * DELP / (SQRT(MWS * PS) * PNTS)

VS = 85.49 * .84 * 494.142 / (SQRT(30.04 * 29.92) * 12. = 98.64 FPS

STACK GAS VOLUMETRIC FLOW AT STACK CONDITIONS

QS = VS * AS * 3600/144

QS = 98.64 * 9161. 3600/144 = 22591388. ACFM

STACK GAS VOLUMETRIC FLOW AT STANDARD CONDITIONS

QSSTD = 17.647 * QS * PS * (1. - (BWO/100)) / (TS + 460.)

$$QSSTD = \frac{17.647 * 22591388. * 29.92 * (1. - (3.04/100))}{(419. + 460.)} = 13157606. \text{ SCFM}$$

PERCENT ISOKINETIC

ISO = (305.58*(TS+460.))*((0.002669*VLC)+(VM*Y*(PB+(PM/13.6))/(TM+460.)))/(TT*VS*PS*DN*DN)

$$ISO = \frac{(305.58*(419.+460.))*((0.002669* 71.)+(112.380* .988*(30.02+(2.975/13.6))/(96.+460.)))}{120. * 98.64 * 29.92 * .223 * .223} = 95.01 \text{ PERCENT}$$

PARTICULATE LOADING -- EPA METHOD 5 (AT STANDARD CONDITIONS)

CS = 0.001 * MN * 15.43 / VMSTD

CS = 0.001 * 74.5 * 15.43 / 106.595 = .0108 GR/DSCF

FIELD DATA

PLANT	PHILLIPS PETRO SWEENY	DATE	11/12/82
SAMPLING LOCATION	FCC STACK	RUN NUMBER	6CM5B
SAMPLE TYPE	M5	PROBE LENGTH & TYPE	6 FT GLASS
OPERATOR	PHILLIPS	NOZZLE : I.D.	.224
AMBIENT TEMP.(DEG.F)	70.	ASSUMED MOISTURE	12.0
BAR.PRESS.(IN.HG)	30.02	SAMPLE BOX NUMBER	
STATIC PRESS.(IN.H2O)	-1.38	METER BOX NUMBER	FB7
FILTER NUMBER(S)	3450227	METER HEAD DIFF.	1.71
STACK INSIDE DIM.(IN)	108.00 .00		
PITOT TUBE COEFF.	.84	PROBE HEATER SETTING	320.
THERM. NO.		HEATER BOX SETTING	320.
LEAKAGE	.000 CFM @ 9.5 IN.HG		
METER CALIB. FACTOR	1.001		

READ & RECORD DATA EVERY 10.0 MINUTES

TRAVERSE POINT NO.	SAMPLE TIME (MIN.)	CLOCK TIME (24-HR CLOCK)	GAS METER READING (CU.FT.)	VELOCITY HEAD (IN.H2O)	ORIFICE PRESSURE DIFFERENTIAL (IN.H2O) DESIRED	ACTUAL	STACK TEMP (DEG.F)	DRY GAS METER TEMP (DEG.F) INLET	OUTLET	PUMP VACUUM (IN.HG)	SAMPLE BOX TEMP (DEG.F)	IMPINGER TEMP (DEG.F)
INIT	0	1108	152.538									
	10.0	1146	162.100	2.400	3.10	3.10	419.	76.	74.	5.8	0.	80.
	20.0	1156	171.810	2.300	3.00	3.00	419.	76.	74.	5.5	0.	84.
	30.0	1206	181.670	2.400	3.10	3.10	420.	79.	75.	5.8	0.	78.
	40.0	1216	191.680	2.400	3.20	3.20	418.	82.	76.	6.0	0.	98.
	50.0	1226	201.740	2.400	3.20	3.20	418.	84.	76.	6.2	0.	102.
	60.0	1236	211.830	2.400	3.20	3.20	419.	84.	76.	6.3	0.	110.
	70.0	1246	221.970	2.400	3.20	3.20	418.	84.	77.	6.3	0.	92.
	80.0	1256	232.030	2.400	3.20	3.20	419.	84.	77.	6.3	0.	82.
	90.0	1306	242.020	2.400	3.20	3.20	419.	83.	77.	6.3	0.	78.
	100.0	1316	252.000	2.400	3.20	3.20	419.	83.	76.	6.5	0.	84.
	110.0	1326	262.010	2.400	3.20	3.20	418.	84.	77.	6.8	0.	96.
	120.0	1336	272.008	2.400	3.20	3.20	418.	84.	78.	7.1	0.	102.
TOTALS	120.0		119.470									
AVERAGE					3.17	3.17	419.	82.	76.	6.2	0.	91.

PARTICULATE FIELD DATA & RESULTS TABULATION

PLANT- NAME AND ADDRESS — TEST TEAM LEADER

PHILLIPS PETRO SWEENY — PHILLIPS

TEST 6CM5B FCC STACK

		ENGLISH UNITS	METRIC UNITS
TEST DATE		11/12/82	11/12/82
TB	TIME-START	1108	1108
TF	TIME-FINISH	1336	1336
TT	NET TIME OF TEST, MIN.	120.0	120.0
NP	NET SAMPLING POINTS	12	12
Y	METER CALIBRATION FACTOR	1.001	1.001
DN	SAMPLING NOZZLE DIAMETER	.224 IN	5.7 MM
CP	PITOT TUBE COEFFICIENT	.84	.84
PM	AVERAGE ORIFICE PRESSURE DROP	3.17 IN-H2O	80.4 MM-H2O
VM	VOLUME OF DRY GAS SAMPLED AT METER CONDITIONS	119.470 CU-FT	3.383 CU-M
TM	AVERAGE GAS METER TEMP	79.0 F	26.1 C
VMSTD	VOLUME OF DRY GAS SAMPLED AT STANDARD CONDITIONS*	118.452 SCF	3.354 SCM
VLC	TOTAL H2O COLLECTED IN IMPINGERS AND SILICA GEL,ML.	293.2	293.2
VWC	VOLUME OF WATER VAPOR AT STANDARD CONDITIONS*	13.801 SCF	.391 SCM
BWO	PERCENT MOISTURE BY VOLUME	10.44	10.44
FMO	MOLE FRACTION DRY GAS	.896	.896
PCO2	PERCENT CO2 BY VOL., DRY	14.55	14.55
PO2	PERCENT O2 BY VOL., DRY	2.15	2.15
PCO	PERCENT CO BY VOL., DRY	.00	.00
PN2	PERCENT N2 BY VOL., DRY	83.30	83.30
MD	MOLECULAR WT-DRY STACK GAS	30.41	30.41
MWS	MOLECULAR WT-STACK GAS	29.12	29.12

PB	BAROMETRIC PRESSURE	30.02	IN-HG	762.51	MM-HG
PSI	STATIC PRES OF STACK GAS	-1.38	IN-H2O	-35.05	MM-H2O
PS	STACK PRES, ABS.	29.92	IN-HG	759.93	MM-HG
TS	AVERAGE STACK TEMP	419.	F	215.	C
VS	AVG STACK GAS VELOCITY	111.5	FPS	34.0	MPS
AS	STACK AREA	9161.	SQ-IN	5.910	SQ-M
QSSTD	STACK FLOW RATE, DRY*	13746600.	SCFH	389263.	SCMH
QS	ACTUAL STACK FLOW RATE	25542972.	ACFH	723300.	ACMH
ISO	PERCENT ISOKINETIC	100.2		100.2	
MN	FILTERABLE-AMBIENT MG. EPA 5	78.6		78.6	
CS	FILTERABLE-AMBIENT	.0102	GR/DSCF*	23.436	MG/DSCM
MN	FILTERABLE-232 MG. EPA 5	56.5		56.5	
CS	FILTERABLE-232	.0074	GR/DSCF*	16.846	MG/DSCM
MN	FILTERABLE-315 MG. EPA 5	52.9		52.9	
CS	FILTERABLE-315	.0069	GR/DSCF*	15.773	MG/DSCM

* 68 DEG F, 29.92 IN.HG.

EXAMPLE PARTICULATE CALCULATIONS TEST NO. 6CM58

FCC STACK

VOLUME OF DRY GAS SAMPLED AT STANDARD CONDITIONS

VMSTD = (17.647 * VM * Y * (PB + PM / 13.6)) / (TM + 460.)

$$VMSTD = \frac{17.647 * 119.470 * 1.001 * (30.02 + 3.167 / 13.6)}{(79. + 460.)} = 118.452 \text{ DSCF}$$

VOLUME OF WATER VAPOR AT STANDARD CONDITIONS

VWC = .04707 * VLC

VWC = .04707 * 293. = 13.80 SCF

PERCENT MOISTURE IN STACK GAS

BWO = (100. * VWC) / (VMSTD + VWC)

$$BWO = \frac{100. * 13.80}{118.452 + 13.80} = 10.44 \text{ PERCENT}$$

MOLE FRACTION OF DRY STACK GAS

FMD = (100. - BWO) / 100.

$$FMD = \frac{100. - 10.4}{100.} = .896$$

AVERAGE MOLECULAR WEIGHT OF DRY STACK GAS

MD = (PCO2 * .44) + (PO2 * .32) + (PN2 + PCO) * .28

MD = (14.55*44/100) + (2.2*32/100) + ((83.3+ .0) * 28/100 = 30.41

MOLECULAR WEIGHT OF STACK GAS

MWS = MD * (1. - (BWO/100)) + 18. * (BWO/100)

MWS = 30.41* (1. -(10.44/100)) + 18. * (10.44/100) = 29.12

STACK GAS VELOCITY AT STACK CONDITIONS

DELP = SUM. OF THE SQRT(VH * (TS + 460.))

VS = 85.49 * CP * DELP / (SQRT(MWS * PS) * PNTS)

VS = 85.49 * .84 * 550.093 / (SQRT(29.12 * 29.92) * 12. = 111.53 FPS

STACK GAS VOLUMETRIC FLOW AT STACK CONDITIONS

QS = VS * AS * 3600/144

QS = 111.53 * 9161. 3600/144 = 25542972. ACFH

STACK GAS VOLUMETRIC FLOW AT STANDARD CONDITIONS

QSSTD = 17.647 * QS * PS * (1. - (BWO/100)) / (TS + 460.)

$$QSSTD = \frac{17.647 * 25542972. * 29.92 * (1. - (10.44/100))}{(419. + 460.)} = 13746600. \text{ SCFH}$$

PERCENT ISOKINETIC

ISO = (305.58*(TS+460.))*((0.002669*VLC)+(VM*Y*(PB+(PM/13.6))/(TM+460.)))/(TT*VS*PS*DN*DN)

$$ISO = \frac{(305.58*(419.+460.))*((0.002669* 293.)+(119.470*1.001*(30.02+(3.167/13.6))/(79.+460.)))}{120. * 111.53 * 29.92 * .224 * .224} = 100.16 \text{ PERCENT}$$

PARTICULATE LOADING -- EPA METHOD 5 (AT STANDARD CONDITIONS)

CS = 0.001 * MN * 15.43 / VMSTD

CS = 0.001 * 78.6 * 15.43 / 118.452 = .0102 GR/DSCF

FIELD DATA

PLANT	PHILLIPS PETRO SWEENY	DATE	11/12/82
SAMPLING LOCATION	FCC STACK	RUN NUMBER	6DM58
SAMPLE TYPE	M5	PROBE LENGTH & TYPE	6 FT GLASS
OPERATOR	PHILLIPS	NOZZLE : I.D.	.227
AMBIENT TEMP.(DEG.F)	70.	ASSUMED MOISTURE	12.0
BAR.PRESS.(IN.HG)	30.02	SAMPLE BOX NUMBER	
STATIC PRESS.(IN.H2O)	-1.38	METER BOX NUMBER	FB2
FILTER NUMBER(S)	3450228	METER HEAD DIFF.	1.73
STACK INSIDE DIM.(IN)	108.00 .00		
PITOT TUBE COEFF.	.84	PROBE HEATER SETTING	320.
THERM. NO.		HEATER BOX SETTING	320.
LEAKAGE	.010 CFM @ 12.0 IN.HG		
METER CALIB. FACTOR	.986		

READ & RECORD DATA EVERY 10.0 MINUTES

TRAVERSE POINT NO.	SAMPLE TIME (MIN.)	CLOCK TIME (24-HR CLOCK)	GAS METER READING (CU.FT.)	VELOCITY HEAD (IN.H2O)	ORIFICE PRESSURE DIFFERENTIAL (IN.H2O) DESIRED	ACTUAL	STACK TEMP (DEG.F)	DRY GAS METER TEMP (DEG.F) INLET	OUTLET	PUMP VACUUM (IN.HG)	SAMPLE BOX TEMP (DEG.F)	IMPINGER TEMP (DEG.F)
INIT	0	1110	106.062									
	10.0	1148	115.660	2.400	3.10	3.10	419.	68.	70.	7.5	0.	76.
	20.0	1158	125.330	2.300	3.00	3.00	419.	70.	72.	7.2	0.	78.
	30.0	1208	135.270	2.400	3.10	3.10	420.	74.	72.	8.0	0.	78.
	40.0	1218	145.260	2.400	3.10	3.10	418.	78.	73.	8.3	0.	96.
	50.0	1228	155.280	2.400	3.20	3.20	418.	80.	76.	8.5	0.	102.
	60.0	1238	165.180	2.400	3.20	3.20	419.	82.	77.	8.5	0.	110.
	70.0	1248	175.050	2.400	3.20	3.20	418.	82.	77.	8.2	0.	88.
	80.0	1258	184.970	2.400	3.20	3.20	419.	82.	76.	8.6	0.	78.
	90.0	1308	194.760	2.400	3.20	3.20	419.	80.	76.	9.0	0.	76.
	100.0	1318	204.650	2.400	3.20	3.20	419.	80.	76.	9.3	0.	82.
	110.0	1328	214.620	2.400	3.20	3.20	418.	82.	76.	9.8	0.	90.
	120.0	1338	224.777	2.400	3.20	3.20	418.	82.	76.	10.2	0.	108.
TOTALS	120.0		118.715									
AVERAGE					3.16	3.16	419.	78.	75.	8.6	0.	89.

PARTICULATE FIELD DATA & RESULTS TABULATION

PLANT- NAME AND ADDRESS — TEST TEAM LEADER

PHILLIPS PETRO SWEENY — PHILLIPS

TEST 6DM58 FCC STACK

		ENGLISH UNITS	METRIC UNITS
TEST DATE		11/12/82	11/12/82
TB	TIME-START	1110	1110
TF	TIME-FINISH	1338	1338
TT	NET TIME OF TEST, MIN.	120.0	120.0
NP	NET SAMPLING POINTS	12	12
Y	METER CALIBRATION FACTOR	.986	.986
DN	SAMPLING NOZZLE DIAMETER	.227 IN	5.8 MM
CP	PITOT TUBE COEFFICIENT	.84	.84
PM	AVERAGE ORIFICE PRESSURE DROP	3.16 IN-H2O	80.2 MM-H2O
VM	VOLUME OF DRY GAS SAMPLED AT METER CONDITIONS	118.715 CU-FT	3.362 CU-M
TM	AVERAGE GAS METER TEMP	76.5 F	24.7 C
VMSTD	VOLUME OF DRY GAS SAMPLED AT STANDARD CONDITIONS*	116.468 SCF	3.298 SCM
VLC	TOTAL H2O COLLECTED IN IMPINGERS AND SILICA GEL,ML.	224.9	224.9
VWC	VOLUME OF WATER VAPOR AT STANDARD CONDITIONS*	10.586 SCF	.300 SCM
BWO	PERCENT MOISTURE BY VOLUME	8.33	8.33
FMD	MOLE FRACTION DRY GAS	.917	.917
PCO2	PERCENT CO2 BY VOL., DRY	14.55	14.55
PO2	PERCENT O2 BY VOL., DRY	2.15	2.15
PCO	PERCENT CO BY VOL., DRY	.00	.00
PN2	PERCENT N2 BY VOL., DRY	83.30	83.30
MD	MOLECULAR WT-DRY STACK GAS	30.41	30.41
MWS	MOLECULAR WT-STACK GAS	29.38	29.38

PB	BAROMETRIC PRESSURE	30.02	IN-HG	762.51	MM-HG
PSI	STATIC PRES OF STACK GAS	-1.38	IN-H2O	-35.05	MM-H2O
PS	STACK PRES, ABS.	29.92	IN-HG	759.93	MM-HG
TS	AVERAGE STACK TEMP	419.	F	215.	C
VS	AVG STACK GAS VELOCITY	111.0	FPS	33.8	MPS
AS	STACK AREA	9161.	SQ-IN	5.910	SQ-M
QSSTD	STACK FLOW RATE, DRY*	14006770.	SCFH	396630.	SCMH
QS	ACTUAL STACK FLOW RATE	25429212.	ACFH	720079.	ACMH
ISO	PERCENT ISOKINETIC	94.1		94.1	
MN	FILTERABLE-AMBIENT MG. EPA 5	63.2		63.2	
CS	FILTERABLE-AMBIENT	.0084	GR/DSCF*	19.165	MG/DSCM
MN	FILTERABLE-232 MG. EPA 5	51.0		51.0	
CS	FILTERABLE-232	.0068	GR/DSCF*	15.465	MG/DSCM
MN	FILTERABLE-315 MG. EPA 5	47.2		47.2	
CS	FILTERABLE-315	.0063	GR/DSCF*	14.313	MG/DSCM

* 68 DEG F, 29.92 IN.HG.

EXAMPLE PARTICULATE CALCULATIONS TEST NO. 6DM58

FCC STACK

VOLUME OF DRY GAS SAMPLED AT STANDARD CONDITIONS

VMSTD = (17.647 * VM * Y * (PB + PM / 13.6)) / (TM + 460.)

$$VMSTD = \frac{17.647 * 118.715 * .986 * (30.02 + 3.158 / 13.6)}{(77. + 460.)} = 116.468 \text{ DSCF}$$

VOLUME OF WATER VAPOR AT STANDARD CONDITIONS

VWC = .04707 * VLC

VWC = .04707 * 225. = 10.59 SCF

PERCENT MOISTURE IN STACK GAS

BWO = (100. * VWC) / (VMSTD + VWC)

$$BWO = \frac{100. * 10.59}{116.468 + 10.59} = 8.33 \text{ PERCENT}$$

MOLE FRACTION OF DRY STACK GAS

FMD = (100. - BWO) / 100.

$$FMD = \frac{100. - 8.3}{100.} = .917$$

AVERAGE MOLECULAR WEIGHT OF DRY STACK GAS

MD = (PCO2 * .44) + (PO2 * .32) + (PN2 + PCO) * .28

MD = (14.55*44/100) + (2.2*32/100) + ((83.3+ .0) * 28/100 = 30.41

MOLECULAR WEIGHT OF STACK GAS

MWS = MD * (1. - (BWO/100)) + 18. * (BWO/100)

MWS = 30.41* (1. -(8.33/100)) + 18. * (8.33/100) = 29.38

STACK GAS VELUCITY AT STACK CONDITIONS

DELP = SUM. OF THE SQRT(VH * (TS + 460.))

VS = 85.49 * CP * DELP / (SQRT(MWS * PS) * PNTS)

VS = 85.49 * .84 * 550.093 / (SQRT(29.38 * 29.92) * 12. = 111.03 FPS

STACK GAS VOLUMETRIC FLOW AT STACK CONDITIONS

QS = VS * AS * 3600/144

QS = 111.03 * 9161. 3600/144 = 25429212. ACFM

STACK GAS VOLUMETRIC FLOW AT STANDARD CONDITIONS

QSSTD = 17.647 * QS * PS * (1. - (BWO/100)) / (TS + 460.)

$$QSSTD = \frac{17.647 * 25429212. * 29.92 * (1. - (8.33/100))}{(419. + 460.)} = 14006770. \text{ SCFM}$$

PERCENT ISOKINETIC

ISO = (305.58*(TS+460.))*((0.002669*VLC)+(VM*Y*(PB+(PM/13.6))/(TM+460.)))/(TT*VS*PS*DN*DN)

$$ISO = \frac{(305.58*(419.+460.))*((0.002669*225.)+(118.715*.986*(30.02+(3.158/13.6))/(77.+460.)))}{120. * 111.03 * 29.92 * .227 * .227} = 94.12 \text{ PERCENT}$$

PARTICULATE LOADING -- EPA METHOD 5 (AT STANDARD CONDITIONS)

CS = 0.001 * MN * 15.43 / VMSTD

CS = 0.001 * 63.2 * 15.43 / 116.468 = .0084 GR/DSCF

FIELD DATA

PLANT	PHILLIPS SWEENY	DATE	11/12/82
SAMPLING LOCATION	FCC STACK	RUN NUMBER	7AM5B
SAMPLE TYPE	M5B	PROBE LENGTH & TYPE	6' GLASS
OPERATOR	DO	NOZZLE : I.D.	.222
AMBIENT TEMP.(DEG.F)	75.	ASSUMED MOISTURE	8.0
BAR.PRESS.(IN.HG)	30.10	SAMPLE BOX NUMBER	
STATIC PRESS.(IN.H2O)	-1.38	METER BOX NUMBER	FB3
FILTER NUMBER(S)	3450147	METER HEAD DIFF.	2.00
STACK INSIDE DIM.(IN)	108.00 .00		
PITOT TUBE COEFF.	.84	PROBE HEATER SETTING	320.
THERM. NO.		HEATER BOX SETTING	320.
LEAKAGE	.004 CFM @ 8.5 IN.HG		
METER CALIB. FACTOR	1.006		

READ & RECORD DATA EVERY 10.0 MINUTES

TRAVERSE POINT NO.	SAMPLE TIME (MIN.)	CLOCK TIME (24-HR CLOCK)	GAS METER READING (CU.FT.)	VELOCITY HEAD (IN.H2O)	ORIFICE PRESSURE DIFFERENTIAL (IN.H2O) DESIRED	ORIFICE PRESSURE DIFFERENTIAL (IN.H2O) ACTUAL	STACK TEMP (DEG.F)	DRY GAS METER TEMP (DEG.F) INLET	DRY GAS METER TEMP (DEG.F) OUTLET	PUMP VACUUM (IN.HG)	SAMPLE BOX TEMP (DEG.F)	IMPINGER TEMP (DEG.F)
INIT	0	1528	788.235									
	10.0	0	796.630	1.950	2.97	2.97	416.	77.	77.	5.9	0.	0.
	20.0	0	805.080	1.950	2.99	2.99	416.	80.	77.	6.2	0.	78.
	30.0	0	813.630	1.950	2.99	2.99	416.	85.	77.	6.3	0.	0.
	40.0	0	822.080	1.950	3.01	3.01	416.	89.	78.	6.2	0.	130.
	50.0	0	830.640	1.950	3.00	3.00	416.	90.	79.	6.3	0.	0.
	60.0	0	839.160	1.950	3.01	3.01	416.	90.	79.	6.3	0.	91.
	70.0	0	847.670	1.950	3.01	3.01	416.	90.	79.	6.6	0.	89.
	80.0	0	856.250	1.950	3.01	3.01	416.	90.	78.	6.8	0.	84.
	90.0	1658	864.794	1.950	3.01	3.01	416.	90.	79.	7.0	0.	82.
TOTALS	90.0		76.559									
AVERAGE					3.00	3.00	416.	87.	78.	6.4	0.	62.

PARTICULATE FIELD DATA & RESULTS TABULATION

PLANT- NAME AND ADDRESS — TEST TEAM LEADER

PHILLIPS SWEENY — DO

TEST 7AMSB FCC STACK

		ENGLISH UNITS	METRIC UNITS
TEST DATE		11/12/82	11/12/82
TB	TIME-START	1528	1528
TF	TIME-FINISH	1658	1658
TT	NET TIME OF TEST, MIN.	90.0	90.0
NP	NET SAMPLING POINTS	9	9
Y	METER CALIBRATION FACTOR	1.006	1.006
DN	SAMPLING NOZZLE DIAMETER	.222 IN	5.6 MM
CP	PITOT TUBE COEFFICIENT	.84	.84
PM	AVERAGE ORIFICE PRESSURE DROP	3.00 IN-H2O	76.2 MM-H2O
VM	VOLUME OF DRY GAS SAMPLED AT METER CONDITIONS	76.559 CU-FT	2.168 CU-M
TM	AVERAGE GAS METER TEMP	82.4 F	28.0 C
VMSTD	VOLUME OF DRY GAS SAMPLED AT STANDARD CONDITIONS*	75.971 SCF	2.151 SCM
VLC	TOTAL H2O COLLECTED IN IMPINGERS AND SILICA GEL,ML.	138.4	138.4
VWC	VOLUME OF WATER VAPOR AT STANDARD CONDITIONS*	6.514 SCF	.184 SCM
BWO	PERCENT MOISTURE BY VOLUME	7.90	7.90
FMD	MOLE FRACTION DRY GAS	.921	.921
PCO2	PERCENT CO2 BY VOL., DRY	14.10	14.10
PO2	PERCENT O2 BY VOL., DRY	3.00	3.00
PCO	PERCENT CO BY VOL., DRY	.00	.00
PN2	PERCENT N2 BY VOL., DRY	82.90	82.90
MD	MOLECULAR WT-DRY STACK GAS	30.38	30.38
MWS	MOLECULAR WT-STACK GAS	29.40	29.40

PB	BAROMETRIC PRESSURE	30.10	IN-HG	764.54	MM-HG
PSI	STATIC PRES OF STACK GAS	-1.38	IN-H2O	-35.05	MM-H2O
PS	STACK PRES, ABS.	30.00	IN-HG	761.96	MM-HG
TS	AVERAGE STACK TEMP	416.	F	213.	C
VS	AVG STACK GAS VELOCITY	99.9	FPS	30.5	MPS
AS	STACK AREA	9161.	SQ-IN	5.910	SQ-M
QSSTD	STACK FLOW RATE, DRY*	12739870.	SCFH	360755.	SCMH
QS	ACTUAL STACK FLOW RATE	22889064.	ACFH	648150.	ACMH
ISO	PERCENT ISOKINETIC	94.1		94.1	
MN	FILTERABLE-AMBIENT MG. EPA 5	48.1		48.1	
CS	FILTERABLE-AMBIENT	.0098	GR/DSCF*	22.361	MG/DSCM
MN	FILTERABLE-160 MG. EPA 5	41.2		41.2	
CS	FILTERABLE-160	.0084	GR/DSCF*	19.153	MG/DSCM
MN	FILTERABLE-232 MG. EPA 5	36.0		36.0	
CS	FILTERABLE-232	.0073	GR/DSCF*	16.736	MG/DSCM
MN	FILTERABLE-315 MG. EPA 5	34.2		34.2	
CS	FILTERABLE-315	.0069	GR/DSCF*	15.899	MG/DSCM

* 68 DEG F, 29.92 IN.HG.

EXAMPLE PARTICULATE CALCULATIONS TEST NO. 7AM5B

FCC STACK

VOLUME OF DRY GAS SAMPLED AT STANDARD CONDITIONS

VMSTD = (17.647 * VM * Y * (PB + PM / 13.6)) / (TM + 460.)

$$VMSTD = \frac{17.647 * 76.559 * 1.006 * (30.10 + 3.000 / 13.6)}{(82. + 460.)} = 75.971 \text{ DSCF}$$

VOLUME OF WATER VAPOR AT STANDARD CONDITIONS

VWC = .04707 * VLC

VWC = .04707 * 138. = 6.51 SCF

PERCENT MOISTURE IN STACK GAS

BWO = (100. * VWC) / (VMSTD + VWC)

$$BWO = \frac{100. * 6.51}{75.971 + 6.51} = 7.90 \text{ PERCENT}$$

MOLE FRACTION OF DRY STACK GAS

FMD = (100. - BWO) / 100.

$$FMD = \frac{100. - 7.9}{100.} = .921$$

AVERAGE MOLECULAR WEIGHT OF DRY STACK GAS

MD = (PCO2 * .44) + (PO2 * .32) + (PN2 + PCO) * .28

MD = (14.10*44/100) + (3.0*32/100) + ((82.9+ .0) * 28/100 = 30.38

MOLECULAR WEIGHT OF STACK GAS

MWS = MD * (1. - (BWO/100)) + 18. * (BWO/100)

MWS = 30.38* (1. -(7.90/100)) + 18. * (7.90/100) = 29.40

STACK GAS VELOCITY AT STACK CONDITIONS

DELP = SUM. OF THE SQRT(VH * (TS + 460.))

VS = 85.49 * CP * DELP / (SQRT(MWS * PS) * PNTS)

VS = 85.49 * .84 * 371.973 / (SQRT(29.40 * 30.00) * 9. = 99.94 FPS

STACK GAS VOLUMETRIC FLOW AT STACK CONDITIONS

QS = VS * AS * 3600/144

QS = 99.94 * 9161. 3600/144 = 22889064. ACFM

STACK GAS VOLUMETRIC FLOW AT STANDARD CONDITIONS

QSSTD = 17.647 * QS * PS * (1. - (BWO/100)) / (TS + 460.)

$$QSSTD = \frac{17.647 * 22889064. * 30.00 * (1. - (7.90/100))}{(416. + 460.)} = 12739870. \text{ SCFM}$$

PERCENT ISOKINETIC

ISO = (305.58*(TS+460.))*((0.002669*VLC)+(VM*Y*(PB+(PM/13.6))/(TM+460.)))/(TT*VS*PS*DN*DN)

$$ISO = \frac{(305.58*(416.+460.))*((0.002669* 138.)+(76.559*1.006*(30.10+(3.000/13.6))/(82.+460.)))}{90. * 99.94 * 30.00 * .222 * .222} = 94.09 \text{ PERCENT}$$

PARTICULATE LOADING -- EPA METHOD 5 (AT STANDARD CONDITIONS)

CS = 0.001 * MN * 15.43 / VMSTD

CS = 0.001 * 48.1 * 15.43 / 75.971 = .0098 GR/DSCF

FIELD DATA

PLANT	PHILLIPS SWEENY	DATE	11/12/82
SAMPLING LOCATION	FCC STACK	RUN NUMBER	78M5B
SAMPLE TYPE	M5B	PROBE LENGTH & TYPE	6' GLASS
OPERATOR	DD	NOZZLE : I.D.	.221
AMBIENT TEMP.(DEG.F)	75.	ASSUMED MOISTURE	8.0
BAR.PRESS.(IN.HG)	30.10	SAMPLE BOX NUMBER	
STATIC PRESS.(IN.H2O)	-1.38	METER BOX NUMBER	FB5
FILTER NUMBER(S)	3450145	METER HEAD DIFF.	1.95
STACK INSIDE DIM.(IN)	108.00 .00		
PITOT TUBE COEFF.	.84	PROBE HEATER SETTING	320.
THERM. NO.		HEATER BOX SETTING	320.
LEAKAGE	.016 CFM @ 11.0 IN.HG		
METER CALIB. FACTOR	.988		

READ & RECORD DATA EVERY 10.0 MINUTES

TRAVERSE POINT NO.	SAMPLE TIME (MIN.)	CLOCK TIME (24-HR CLOCK)	GAS METER READING (CU.FT.)	VELOCITY HEAD (IN.H2O)	ORIFICE PRESSURE DIFFERENTIAL (IN.H2O) DESIRED	ACTUAL	STACK TEMP (DEG.F)	DRY GAS METER TEMP (DEG.F) INLET	OUTLET	PUMP VACUUM (IN.HG)	SAMPLE BOX TEMP (DEG.F)	IMPINGER TEMP (DEG.F)
INIT	0	1529	451.753									
	10.0	0	461.200	1.950	2.97	2.97	416.	89.	88.	9.2	0.	0.
	20.0	0	470.660	1.950	2.99	2.99	416.	91.	89.	9.2	0.	100.
	30.0	0	480.080	1.950	2.99	2.99	416.	95.	89.	9.2	0.	0.
	40.0	0	489.480	1.950	3.01	3.01	416.	99.	89.	9.0	0.	124.
	50.0	0	498.800	1.950	3.00	3.00	416.	101.	90.	9.0	0.	0.
	60.0	0	508.130	1.950	3.01	3.01	416.	102.	90.	9.0	0.	87.
	70.0	0	517.480	1.950	3.01	3.01	416.	101.	90.	9.2	0.	93.
	80.0	0	526.880	1.950	3.01	3.01	416.	101.	90.	9.4	0.	87.
	90.0	1659	536.267	1.950	3.01	3.01	416.	101.	90.	9.7	0.	86.
TOTALS	90.0		84.514									
AVERAGE					3.00	3.00	416.	98.	89.	9.2	0.	64.

PARTICULATE FIELD DATA & RESULTS TABULATION

PLANT- NAME AND ADDRESS — TEST TEAM LEADER

PHILLIPS SWEENY — DO

TEST 7BM5B FCC STACK

		ENGLISH UNITS	METRIC UNITS
TEST DATE		11/12/82	11/12/82
TB	TIME-START	1529	1529
TF	TIME-FINISH	1659	1659
TT	NET TIME OF TEST, MIN.	90.0	90.0
NP	NET SAMPLING POINTS	9	9
Y	METER CALIBRATION FACTOR	.988	.988
DN	SAMPLING NOZZLE DIAMETER	.221 IN	5.6 MM
CP	PITOT TUBE COEFFICIENT	.84	.84
PM	AVERAGE ORIFICE PRESSURE DROP	3.00 IN-H2O	76.2 MM-H2O
VM	VOLUME OF DRY GAS SAMPLED AT METER CONDITIONS	84.514 CU-FT	2.393 CU-M
TM	AVERAGE GAS METER TEMP	93.6 F	34.2 C
VMSTD	VOLUME OF DRY GAS SAMPLED AT STANDARD CONDITIONS*	80.703 SCF	2.285 SCM
VLC	TOTAL H2O COLLECTED IN IMPINGERS AND SILICA GEL,ML.	95.6	95.6
VWC	VOLUME OF WATER VAPOR AT STANDARD CONDITIONS*	4.500 SCF	.127 SCM
BWO	PERCENT MOISTURE BY VOLUME	5.28	5.28
FMD	MOLE FRACTION DRY GAS	.947	.947
PCO2	PERCENT CO2 BY VOL., DRY	14.10	14.10
PO2	PERCENT O2 BY VOL., DRY	3.00	3.00
PCO	PERCENT CO BY VOL., DRY	.00	.00
PN2	PERCENT N2 BY VOL., DRY	82.90	82.90
MD	MOLECULAR WT-DRY STACK GAS	30.38	30.38
MWS	MOLECULAR WT-STACK GAS	29.72	29.72

PB	BAROMETRIC PRESSURE	30.10	IN-HG	764.54	MM-HG
PSI	STATIC PRES OF STACK GAS	-1.38	IN-H2O	-35.05	MM-H2O
PS	STACK PRES, ABS.	30.00	IN-HG	761.96	MM-HG
TS	AVERAGE STACK TEMP	416.	F	213.	C
VS	AVG STACK GAS VELOCITY	99.4	FPS	30.3	MPS
AS	STACK AREA	9161.	SQ-IN	5.910	SQ-M
QSSTD	STACK FLOW RATE, DRY*	13030212.	SCFM	368977.	SCMM
QS	ACTUAL STACK FLOW RATE	22764048.	ACFM	644610.	ACMM
ISO	PERCENT ISOKINETIC	98.6		98.6	
MN	FILTERABLE-AMBIENT MG. EPA 5	68.8		68.8	
CS	FILTERABLE-AMBIENT	.0132	GR/DSCF*	30.109	MG/DSCM
MN	FILTERABLE-160 MG. EPA 5	46.2		46.2	
CS	FILTERABLE-160	.0088	GR/DSCF*	20.218	MG/DSCM
MN	FILTERABLE-232 MG. EPA 5	39.7		39.7	
CS	FILTERABLE-232	.0076	GR/DSCF*	17.374	MG/DSCM
MN	FILTERABLE-315 MG. EPA 5	36.7		36.7	
CS	FILTERABLE-315	.0070	GR/DSCF*	16.061	MG/DSCM

* 68 DEG F, 29.92 IN.HG.

EXAMPLE PARTICULATE CALCULATIONS TEST NO. 78M5B

FCC STACK

VOLUME OF DRY GAS SAMPLED AT STANDARD CONDITIONS

VMSTD = (17.647 * VM * Y * (PB + PM / 13.6)) / (TM + 460.)

$$VMSTD = \frac{17.647 * 84.514 * .988 * (30.10 + 3.000 / 13.6)}{(94. + 460.)} = 80.703 \text{ DSCF}$$

VOLUME OF WATER VAPOR AT STANDARD CONDITIONS

VWC = .04707 * VLC

VWC = .04707 * 96. = 4.50 SCF

PERCENT MOISTURE IN STACK GAS

BWO = (100. * VWC) / (VMSTD + VWC)

$$BWO = \frac{100. * 4.50}{80.703 + 4.50} = 5.28 \text{ PERCENT}$$

MOLE FRACTION OF DRY STACK GAS

FMD = (100. - BWO) / 100.

$$FMD = \frac{100. - 5.3}{100.} = .947$$

AVERAGE MOLECULAR WEIGHT OF DRY STACK GAS

MD = (PCO2 * .44) + (PO2 * .32) + (PN2 + PCO) * .28

MD = (14.10*44/100) + (3.0*32/100) + ((82.9+ .0) * 28/100 = 30.38

MOLECULAR WEIGHT OF STACK GAS

MWS = MD * (1. - (BWO/100)) + 18. * (BWO/100)

MWS = 30.38* (1. -(5.28/100)) + 18. * (5.28/100) = 29.72

STACK GAS VELOCITY AT STACK CONDITIONS

DELP = SUM. OF THE SQRT(VH * (TS + 460.))

VS = 85.49 * CP * DELP / (SQRT(MWS * PS) * PNTS)

VS = 85.49 * .84 * 371.973 / (SQRT(29.72 * 30.00) * 9. = 99.40 FPS

STACK GAS VOLUMETRIC FLOW AT STACK CONDITIONS

QS = VS * AS * 3600/144

QS = 99.40 * 9161. 3600/144 = 22764048. ACFH

STACK GAS VOLUMETRIC FLOW AT STANDARD CONDITIONS

QSSTD = 17.647 * QS * PS * (1. - (BWO/100)) / (TS + 460.)

$$QSSTD = \frac{17.647 * 22764048. * 30.00 * (1. - (5.28/100))}{(416. + 460.)} = 13030212. \text{ SCFH}$$

PERCENT ISOKINETIC

ISO = (305.58*(TS+460.))*((0.002669*VLC)+(VM*Y*(PB+(PM/13.6))/(TM+460.)))/(TT*VS*PS*DN*DN)

$$ISO = \frac{(305.58*(416.+460.))*((0.002669* 96.)+(84.514* .988*(30.10+(3.000/13.6))/(94.+460.)))}{90. * 99.40 * 30.00 * .221 * .221} = 98.61 \text{ PERCENT}$$

PARTICULATE LOADING -- EPA METHOD 5 (AT STANDARD CONDITIONS)

CS = 0.001 * MN * 15.43 / VMSTD

CS = 0.001 * 68.8 * 15.43 / 80.703 = .0132 GR/DSCF

FIELD DATA

PLANT	PHILLIPS PETRO SWEENY	DATE	11/12/82
SAMPLING LOCATION	FCL STACK	RUN NUMBER	7CM5W
SAMPLE TYPE	M5	PROBE LENGTH & TYPE	6 FT GLASS
OPERATOR	PHILLIPS	NOZZLE : I.D.	.224
AMBIENT TEMP.(DEG.F)	73.	ASSUMED MOISTURE	12.0
BAR.PRESS.(IN.HG)	30.10	SAMPLE BOX NUMBER	
STATIC PRESS.(IN.H2O)	-1.38	METER BOX NUMBER	FB7
FILTER NUMBER(S)	3450144	METER HEAD DIFF.	1.71
STACK INSIDE DIM.(IN)	108.00 .00		
PITOT TUBE COEFF.	.84	PROBE HEATER SETTING	250.
THERM. NO.		HEATER BOX SETTING	250.
LEAKAGE	.000 CFM @ 12.5 IN.HG		
METER CALIB. FACTOR	1.001		

READ & RECORD DATA EVERY 10.0 MINUTES

TRAVERSE POINT NO.	SAMPLE TIME (MIN.)	CLOCK TIME (24-HR CLOCK)	GAS METER READING (CU.FT.)	VELOCITY HEAD (IN.H2O)	ORIFICE PRESSURE DIFFERENTIAL (IN.H2O) DESIRED	ORIFICE PRESSURE DIFFERENTIAL (IN.H2O) ACTUAL	STACK TEMP (DEG.F)	DRY GAS METER TEMP (DEG.F) INLET	DRY GAS METER TEMP (DEG.F) OUTLET	PUMP VACUUM (IN.HG)	SAMPLE BOX TEMP (DEG.F)	IMPINGER TEMP (DEG.F)
INIT	0	1529	274.480									
	10.0	1539	284.330	2.400	3.10	3.10	416.	75.	73.	10.2	0.	78.
	20.0	1549	294.130	2.400	3.10	3.10	416.	75.	73.	10.5	0.	74.
	30.0	1559	303.970	2.400	3.10	3.10	415.	76.	73.	10.8	0.	78.
	40.0	1609	313.860	2.400	3.20	3.20	415.	78.	73.	11.0	0.	88.
	50.0	1619	323.740	2.400	3.20	3.20	415.	78.	73.	10.8	0.	84.
	60.0	1629	333.680	2.400	3.20	3.20	414.	80.	74.	10.5	0.	78.
	70.0	1639	343.650	2.400	3.20	3.20	414.	80.	74.	10.5	0.	84.
	80.0	1649	353.260	2.300	3.00	3.00	414.	80.	74.	10.0	0.	77.
	90.0	1659	362.877	2.300	3.00	3.00	414.	80.	74.	10.0	0.	79.
TOTALS	90.0		88.397									
AVERAGE					3.12	3.12	415.	78.	73.	10.5	0.	80.

PARTICULATE FIELD DATA & RESULTS TABULATION

PLANT- NAME AND ADDRESS — TEST TEAM LEADER

PHILLIPS PETRO SWEENY — PHILLIPS

TEST 7CM5W FCC STACK

		ENGLISH UNITS	METRIC UNITS
TEST DATE		11/12/82	11/12/82
TB	TIME-START	1529	1529
TF	TIME-FINISH	1659	1659
TT	NET TIME OF TEST, MIN.	90.0	90.0
NP	NET SAMPLING POINTS	9	9
Y	METER CALIBRATION FACTOR	1.001	1.001
DN	SAMPLING NOZZLE DIAMETER	.224 IN	5.7 MM
CP	PITOT TUBE COEFFICIENT	.84	.84
PM	AVERAGE ORIFICE PRESSURE DROP	3.12 IN-H2O	79.3 MM-H2O
VM	VOLUME OF DRY GAS SAMPLED AT METER CONDITIONS	88.397 CU-FT	2.503 CU-M
TM	AVERAGE GAS METER TEMP	75.7 F	24.3 C
VMSTD	VOLUME OF DRY GAS SAMPLED AT STANDARD CONDITIONS*	88.403 SCF	2.503 SCM
VLC	TOTAL H2O COLLECTED IN IMPINGERS AND SILICA GEL,ML.	282.5	282.5
VWC	VOLUME OF WATER VAPOR AT STANDARD CONDITIONS*	13.297 SCF	.377 SCM
BWO	PERCENT MOISTURE BY VOLUME	13.07	13.07
FMD	MOLE FRACTION DRY GAS	.869	.869
PCO2	PERCENT CO2 BY VOL., DRY	14.10	14.10
PO2	PERCENT O2 BY VOL., DRY	3.00	3.00
PCO	PERCENT CO BY VOL., DRY	.00	.00
PN2	PERCENT N2 BY VOL., DRY	82.90	82.90
MD	MOLECULAR WT-DRY STACK GAS	30.38	30.38
MWS	MOLECULAR WT-STACK GAS	28.76	28.76

PB	BAROMETRIC PRESSURE	30.10	IN-HG	764.54	MM-HG
PSI	STATIC PRES OF STACK GAS	-1.38	IN-H2O	-35.05	MM-H2O
PS	STACK PRES, ABS.	30.00	IN-HG	761.96	MM-HG
TS	AVERAGE STACK TEMP	415.	F	213.	C
VS	AVG STACK GAS VELOCITY	111.5	FPS	34.0	MPS
AS	STACK AREA	9161.	SQ-IN	5.910	SQ-M
QSSTD	STACK FLOW RATE, DRY*	13433232.	SCFH	380389.	SCMH
QS	ACTUAL STACK FLOW RATE	25536552.	ACFH	723119.	ACMH
ISO	PERCENT ISOKINETIC	102.0		102.0	

* 68 DEG F, 29.92 IN.HG.

EXAMPLE PARTICULATE CALCULATIONS TEST NO. 7CM5W

FCC STACK

VOLUME OF DRY GAS SAMPLED AT STANDARD CONDITIONS

VMSTD = (17.647 * VM * Y * (PB + PM / 13.6)) / (TM + 460.)

$$VMSTD = \frac{17.647 * 88.397 * 1.001 * (30.10 + 3.122 / 13.6)}{(76. + 460.)} = 88.403 \text{ DSCF}$$

VOLUME OF WATER VAPOR AT STANDARD CONDITIONS

VWC = .04707 * VLC

VWC = .04707 * 283. = 13.30 SCF

PERCENT MOISTURE IN STACK GAS

BWO = (100. * VWC) / (VMSTD + VWC)

$$BWO = \frac{100. * 13.30}{88.403 + 13.30} = 13.07 \text{ PERCENT}$$

MOLE FRACTION OF DRY STACK GAS

FMD = (100. - BWO) / 100.

$$FMD = \frac{100. - 13.1}{100.} = .869$$

AVERAGE MOLECULAR WEIGHT OF DRY STACK GAS

MD = (PCO2 * .44) + (PO2 * .32) + (PN2 + PCO) * .28

MD = (14.10*44/100) + (3.0*32/100) + ((82.9+ .0) * 28/100 = 30.38

MOLECULAR WEIGHT OF STACK GAS

MWS = MD * (1. - (BWO/100)) + 18. * (BWO/100)

MWS = 30.38* (1. -(13.07/100)) + 18. * (13.07/100) = 28.76

STACK GAS VELOCITY AT STACK CONDITIONS

DELP = SUM. OF THE SQRT(VH * (TS + 460.))

VS = 85.49 * CP * DELP / (SQRT(MWS * PS) * PNTS)

VS = 85.49 * .84 * 410.451 / (SQRT(28.76 * 30.00) * 9. = 111.50 FPS

STACK GAS VOLUMETRIC FLOW AT STACK CONDITIONS

QS = VS * AS * 3600/144

QS = 111.50 * 9161. 3600/144 = 25536552. ACFH

STACK GAS VOLUMETRIC FLOW AT STANDARD CONDITIONS

QSSTD = 17.647 * QS * PS * (1. - (BWO/100)) / (TS + 460.)

$$QSSTD = \frac{17.647 * 25536552. * 30.00 * (1. - (13.07/100))}{(415. + 460.)} = 13433232. \text{ SCFH}$$

PERCENT ISOKINETIC

ISO = (305.58*(TS+460.))*((0.002669*VLC)+(VM*Y*(PB+(PM/13.6))/(TM+460.)))/(TT*VS*PS*DN*DN)

$$ISO = \frac{(305.58*(415.+460.))*((0.002669* 283.)+(88.397*1.001*(30.10+(3.122/13.6))/(76.+460.)))}{90. * 111.50 * 30.00 * .224 * .224} = 102.00 \text{ PERCENT}$$

PARTICULATE LOADING -- EPA METHOD 5 (AT STANDARD CONDITIONS)

CS = 0.001 * MN * 15.43 / VMSTD

CS = 0.001 * 0.0000E+00 * 15.43 / 88.403 = 0.0000E+00 GR/DSCF

FIELD DATA

PLANT	PHILLIPS PETRO	DATE	11/12/82
SAMPLING LOCATION	FCC STACK	RUN NUMBER	7DM5W
SAMPLE TYPE	M5	PROBE LENGTH & TYPE	6 FT GLASS
OPERATOR	PHILLIPS	NOZZLE : I.D.	.226
AMBIENT TEMP.(DEG.F)	73.	ASSUMED MOISTURE	12.0
BAR.PRESS.(IN.HG)	30.10	SAMPLE BOX NUMBER	
STATIC PRESS.(IN.H2O)	-1.38	METER BOX NUMBER	FB2
FILTER NUMBER(S)	3450143	METER HEAD DIFF.	1.73
STACK INSIDE DIM.(IN)	108.00 .00		
PITOT TUBE COEFF.	.84	PROBE HEATER SETTING	250.
THERM. NO.		HEATER BOX SETTING	250.
LEAKAGE	.005 CFM @ 8.0 IN.HG		
METER CALIB. FACTOR	.986		

READ & RECORD DATA EVERY 10.0 MINUTES

TRAVERSE POINT NO.	SAMPLE TIME (MIN.)	CLOCK TIME (24-HR CLOCK)	GAS METER READING (CU.FT.)	VELOCITY HEAD (IN.H2O)	ORIFICE PRESSURE DIFFERENTIAL (IN.H2O) DESIRED	ACTUAL	STACK TEMP (DEG.F)	DRY GAS METER TEMP (DEG.F) INLET	OUTLET	PUMP VACUUM (IN.HG)	SAMPLE BOX TEMP (DEG.F)	IMPINGER TEMP (DEG.F)
INIT	0	1531	226.453									
	10.0	1541	236.120	2.400	3.10	3.10	416.	68.	68.	7.0	0.	76.
	20.0	1551	245.830	2.400	3.10	3.10	416.	68.	68.	7.5	0.	75.
	30.0	1601	255.490	2.400	3.10	3.10	415.	72.	68.	7.0	0.	78.
	40.0	1611	265.290	2.400	3.10	3.10	415.	75.	68.	7.0	0.	72.
	50.0	1621	274.980	2.400	3.10	3.10	415.	76.	70.	7.0	0.	76.
	60.0	1631	284.620	2.400	3.10	3.10	414.	77.	70.	7.0	0.	74.
	70.0	1641	294.330	2.400	3.10	3.10	414.	77.	70.	7.0	0.	76.
	80.0	1651	303.820	2.300	3.00	3.00	414.	77.	71.	7.0	0.	79.
	90.0	1701	313.342	2.300	3.00	3.00	414.	77.	71.	7.2	0.	81.
TOTALS	90.0		86.889									
AVERAGE					3.08	3.08	415.	74.	69.	7.1	0.	77.

PARTICULATE FIELD DATA & RESULTS TABULATION

PLANT- NAME AND ADDRESS — TEST TEAM LEADER

PHILLIPS PETRO — PHILLIPS

TEST 70M5W FCC STACK

		ENGLISH UNITS	METRIC UNITS
TEST DATE		11/12/82	11/12/82
TB	TIME-START	1531	1531
TF	TIME-FINISH	1701	1701
TT	NET TIME OF TEST, MIN.	90.0	90.0
NP	NET SAMPLING POINTS	9	9
Y	METER CALIBRATION FACTOR	.986	.986
DN	SAMPLING NOZZLE DIAMETER	.226 IN	5.7 MM
CP	PITOT TUBE COEFFICIENT	.84	.84
PM	AVERAGE ORIFICE PRESSURE DROP	3.08 IN-H2O	78.2 MM-H2O
VM	VOLUME OF DRY GAS SAMPLED AT METER CONDITIONS	86.889 CU-FT	2.460 CU-M
TM	AVERAGE GAS METER TEMP	71.7 F	22.1 C
VMSTD	VOLUME OF DRY GAS SAMPLED AT STANDARD CONDITIONS*	86.228 SCF	2.442 SCM
VLC	TOTAL H2O COLLECTED IN IMPINGERS AND SILICA GEL,ML.	291.5	291.5
VWC	VOLUME OF WATER VAPOR AT STANDARD CONDITIONS*	13.721 SCF	.389 SCM
BWO	PERCENT MOISTURE BY VOLUME	13.73	13.73
FMD	MOLE FRACTION DRY GAS	.863	.863
PCO2	PERCENT CO2 BY VOL., DRY	14.10	14.10
PO2	PERCENT O2 BY VOL., DRY	3.00	3.00
PCO	PERCENT CO BY VOL., DRY	.00	.00
PN2	PERCENT N2 BY VOL., DRY	82.90	82.90
MD	MOLECULAR WT-DRY STACK GAS	30.38	30.38
MWS	MOLECULAR WT-STACK GAS	28.68	28.68

PB	BAROMETRIC PRESSURE	30.10	IN-HG	764.54	MM-HG
PSI	STATIC PRES OF STACK GAS	-1.38	IN-H2O	-35.05	MM-H2O
PS	STACK PRES, ABS.	30.00	IN-HG	761.96	MM-HG
TS	AVERAGE STACK TEMP	415.	F	213.	C
VS	AVG STACK GAS VELOCITY	111.7	FPS	34.0	MPS
AS	STACK AREA	9161.	SQ-IN	5.910	SQ-M
QSSTD	STACK FLOW RATE, DRY*	13351082.	SCFH	378063.	SCMH
QS	ACTUAL STACK FLOW RATE	25572512.	ACFH	724137.	ACMH
ISO	PERCENT ISOKINETIC	98.3		98.3	

* 68 DEG F, 29.92 IN.HG.

EXAMPLE PARTICULATE CALCULATIONS TEST NO. 7DM5W

FCC STACK

VOLUME OF DRY GAS SAMPLED AT STANDARD CONDITIONS

VMSTD = (17.647 * VM * Y * (PB + PM / 13.6)) / (TM + 460.)

$$VMSTD = \frac{17.647 * 86.889 * .986 * (30.10 + 3.078 / 13.6)}{(72. + 460.)} = 86.228 \text{ DSCF}$$

VOLUME OF WATER VAPOR AT STANDARD CONDITIONS

VWC = .04707 * VLC

VWC = .04707 * 292. = 13.72 SCF

PERCENT MOISTURE IN STACK GAS

BWO = (100. * VWC) / (VMSTD + VWC)

$$BWO = \frac{100. * 13.72}{86.228 + 13.72} = 13.73 \text{ PERCENT}$$

MOLE FRACTION OF DRY STACK GAS

FMD = (100. - BWO) / 100.

$$FMD = \frac{100. - 13.7}{100.} = .863$$

AVERAGE MOLECULAR WEIGHT OF DRY STACK GAS

MD = (PCO2 * .44) + (PO2 * .32) + (PN2 + PCO) * .28

MD = (14.10*44/100) + (3.0*32/100) + ((82.9+ .0) * 28/100 = 30.38

MOLECULAR WEIGHT OF STACK GAS

MWS = MD * (1. - (BWO/100)) + 18. * (BWO/100)

MWS = 30.38* (1. -(13.73/100)) + 18. * (13.73/100) = 28.68

STACK GAS VELOCITY AT STACK CONDITIONS

DELP = SUM. OF THE SQRT(VH * (TS + 460.))

VS = 85.49 * CP * DELP / (SQRT(MWS * PS) * PNTS)

VS = 85.49 * .84 * 410.451 / (SQRT(28.68 * 30.00) * 9. = 111.66 FPS

STACK GAS VOLUMETRIC FLOW AT STACK CONDITIONS

QS = VS * AS * 3600/144

QS = 111.66 * 9161. 3600/144 = 25572512. ACFH

STACK GAS VOLUMETRIC FLOW AT STANDARD CONDITIONS

QSSTD = 17.647 * QS * PS * (1. - (BWO/100)) / (TS + 460.)

$$QSSTD = \frac{17.647 * 25572512. * 30.00 * (1. - (13.73/100))}{(415. + 460.)} = 13351082. \text{ SCFH}$$

PERCENT ISOKINETIC

ISO = (305.58*(TS+460.))*((0.002669*VLC)+(VM*Y*(PB+(PM/13.6))/(TM+460.)))/(TT*VS*PS*DN*DN)

$$ISO = \frac{(305.58*(415.+460.))*((0.002669* 292.)+(86.889* .986*(30.10+(3.078/13.6))/(72.+460.)))}{90. * 111.66 * 30.00 * .226 * .226} = 98.34 \text{ PERCENT}$$

PARTICULATE LOADING -- EPA METHOD 5 (AT STANDARD CONDITIONS)

CS = 0.001 * MN * 15.43 / VMSTD

CS = 0.001 * 0.0000E+00 * 15.43 / 86.228 = 0.0000E+00 GR/DSCF

FIELD DATA

PLANT	PHILLIPS SWEENY	DATE	11/13/82
SAMPLING LOCATION	FCC STACK	RUN NUMBER	BAM545
SAMPLE TYPE	M5-450	PROBE LENGTH & TYPE	6' GLASS
OPERATOR	DO	NOZZLE : I.D.	.219
AMBIENT TEMP.(DEG.F)	50.	ASSUMED MOISTURE	8.0
BAR.PRESS.(IN.HG)	30.39	SAMPLE BOX NUMBER	
STATIC PRESS.(IN.H2O)	-1.38	METER BOX NUMBER	FB3
FILTER NUMBER(S)	3450137	METER HEAD DIFF.	2.00
STACK INSIDE DIM.(IN)	108.00 .00		
PITOT TUBE COEFF.	.84	PROBE HEATER SETTING	450.
THERM. NO.		HEATER BOX SETTING	450.
LEAKAGE	.006 CFM @ 11.0 IN.HG		
METER CALIB. FACTOR	1.006		

READ & RECORD DATA EVERY 10.0 MINUTES

TRAVERSE POINT NO.	SAMPLE TIME (MIN.)	CLOCK TIME (24-HR CLOCK)	GAS METER READING (CU.FT.)	VELOCITY HEAD (IN.H2O)	ORIFICE PRESSURE DIFFERENTIAL (IN.H2O) DESIRED	ACTUAL	STACK TEMP (DEG.F)	DRY GAS METER TEMP (DEG.F) INLET	OUTLET	PUMP VACUUM (IN.HG)	SAMPLE BOX TEMP (DEG.F)	IMPINGER TEMP (DEG.F)
INIT	0	1203	865.047									
	10.0	0	873.580	1.950	2.91	2.91	424.	79.	76.	9.7	0.	0.
	20.0	0	881.960	1.900	2.84	2.84	424.	81.	76.	9.2	0.	145.
	30.0	0	890.300	1.900	2.86	2.86	424.	86.	76.	8.7	0.	163.
	40.0	0	898.780	1.950	2.96	2.96	425.	91.	78.	8.7	0.	128.
	50.0	0	907.230	1.950	2.96	2.96	425.	92.	79.	8.7	0.	112.
	60.0	0	915.630	1.900	2.89	2.89	424.	91.	80.	8.8	0.	105.
	70.0	0	924.100	1.950	2.97	2.97	424.	91.	80.	9.0	0.	103.
	80.0	0	932.670	1.950	2.97	2.97	423.	90.	80.	9.4	0.	101.
	90.0	0	941.110	1.900	2.90	2.90	423.	91.	80.	9.3	0.	98.
	100.0	0	949.560	1.900	2.90	2.90	424.	91.	80.	9.3	0.	97.
	110.0	0	958.120	1.950	2.98	2.98	424.	92.	80.	9.8	0.	105.
	120.0	1403	966.713	1.950	2.99	2.99	424.	93.	80.	9.8	0.	99.
TOTALS	120.0		101.666									
AVERAGE					2.93	2.93	424.	89.	79.	9.2	0.	105.

PARTICULATE FIELD DATA & RESULTS TABULATION

PLANT- NAME AND ADDRESS — TEST TEAM LEADER

PHILLIPS SWEENY — DO

TEST 8AM545 FCC STACK

		ENGLISH UNITS	METRIC UNITS
TEST DATE		11/13/82	11/13/82
TB	TIME-START	1203	1203
TF	TIME-FINISH	1403	1403
TT	NET TIME OF TEST, MIN.	120.0	120.0
NP	NET SAMPLING POINTS	12	12
Y	METER CALIBRATION FACTOR	1.006	1.006
DN	SAMPLING NOZZLE DIAMETER	.219 IN	5.6 MM
CP	PITOT TUBE COEFFICIENT	.84	.84
PM	AVERAGE ORIFICE PRESSURE DROP	2.93 IN-H2O	74.4 MM-H2O
VM	VOLUME OF DRY GAS SAMPLED AT METER CONDITIONS	101.666 CU-FT	2.879 CU-M
TM	AVERAGE GAS METER TEMP	83.9 F	28.8 C
VMSTD	VOLUME OF DRY GAS SAMPLED AT STANDARD CONDITIONS*	101.564 SCF	2.876 SCM
VLC	TOTAL H2O COLLECTED IN IMPINGERS AND SILICA GEL,ML.	108.3	108.3
VWC	VOLUME OF WATER VAPOR AT STANDARD CONDITIONS*	5.098 SCF	.144 SCM
BWO	PERCENT MOISTURE BY VOLUME	4.78	4.78
FMD	MOLE FRACTION DRY GAS	.952	.952
PCO2	PERCENT CO2 BY VOL., DRY	15.00	15.00
PO2	PERCENT O2 BY VOL., DRY	3.00	3.00
PCO	PERCENT CO BY VOL., DRY	.00	.00
PN2	PERCENT N2 BY VOL., DRY	82.00	82.00
MD	MOLECULAR WT-DRY STACK GAS	30.52	30.52
MWS	MOLECULAR WT-STACK GAS	29.92	29.92

PB	BAROMETRIC PRESSURE	30.39	IN-HG	771.91	MM-HG
PSI	STATIC PRES OF STACK GAS	-1.38	IN-H2O	-35.05	MM-H2O
PS	STACK PRES, ABS.	30.29	IN-HG	769.33	MM-HG
TS	AVERAGE STACK TEMP	424.	F	218.	C
VS	AVG STACK GAS VELOCITY	98.5	FPS	30.0	MPS
AS	STACK AREA	9161.	SQ-IN	5.910	SQ-M
QSSTD	STACK FLOW RATE, DRY*	12988850.	SCFH	367805.	SCMH
QS	ACTUAL STACK FLOW RATE	22560172.	ACFH	638836.	ACMH
ISO	PERCENT ISOKINETIC	95.1		95.1	
MN	FILTERABLE-AMBIENT MG. EPA 5	84.7		84.7	
CS	FILTERABLE-AMBIENT	.0129	GR/DSCF*	29.453	MG/DSCM
MN	FILTERABLE-232 MG. EPA 5	72.8		72.8	
CS	FILTERABLE-232	.0111	GR/DSCF*	25.315	MG/DSCM
MN	FILTERABLE-315 MG. EPA 5	69.4		69.4	
CS	FILTERABLE-315	.0105	GR/DSCF*	24.133	MG/DSCM

* 68 DEG F, 29.92 IN.HG.

EXAMPLE PARTICULATE CALCULATIONS TEST NO.8AM545

FCC STACK

VOLUME OF DRY GAS SAMPLED AT STANDARD CONDITIONS

VMSTD = (17.647 * VM * Y * (PB + PM / 13.6)) / (TM + 460.)

$$VMSTD = \frac{17.647 * 101.666 * 1.006 * (30.39 + 2.928 / 13.6)}{(84. + 460.)} = 101.564 \text{ DSCF}$$

VOLUME OF WATER VAPOR AT STANDARD CONDITIONS

VWC = .04707 * VLC

VWC = .04707 * 108. = 5.10 SCF

PERCENT MOISTURE IN STACK GAS

BWO = (100. * VWC) / (VMSTD + VWC)

$$BWO = \frac{100. * 5.10}{101.564 + 5.10} = 4.78 \text{ PERCENT}$$

MOLE FRACTION OF DRY STACK GAS

FMD = (100. - BWO) / 100.

$$FMD = \frac{100. - 4.8}{100.} = .952$$

AVERAGE MOLECULAR WEIGHT OF DRY STACK GAS

MD = (PCO2 * .44) + (PO2 * .32) + (PN2 + PCO) * .28

MD = (15.00*44/100) + (3.0*32/100) + ((82.0+ .0) * 28/100 = 30.52

MOLECULAR WEIGHT OF STACK GAS

MWS = MD * (1. - (BWO/100)) + 18. * (BWO/100)

MWS = 30.52* (1. -(4.78/100)) + 18. * (4.78/100) = 29.92

STACK GAS VELOCITY AT STACK CONDITIONS

DELP = SUM. OF THE SQRT(VH * (TS + 460.))

VS = 85.49 * CP * DELP / (SQRT(MWS * PS) * PNTS)

VS = 85.49 * .84 * 495.546 / (SQRT(29.92 * 30.29) * 12. = 98.51 FPS

STACK GAS VOLUMETRIC FLOW AT STACK CONDITIONS

QS = VS * AS * 3600/144

QS = 98.51 * 9161. 3600/144 = 22560172. ACFM

STACK GAS VOLUMETRIC FLOW AT STANDARD CONDITIONS

QSSTD = 17.647 * QS * PS * (1. - (BWO/100)) / (TS + 460.)

$$QSSTD = \frac{17.647 * 22560172. * 30.29 * (1. - (4.78/100))}{(424. + 460.)} = 12988850. \text{ SCFM}$$

PERCENT ISOKINETIC

ISO = (305.58*(TS+460.))*((0.002669*VLC)+(VM*Y*(PB+(PM/13.6))/(TM+460.)))/(TT*VS*PS*DN*DN)

$$ISO = \frac{(305.58*(424.+460.))*((0.002669* 108.)+(101.666*1.006*(30.39+(2.928/13.6))/(84.+460.)))}{120. * 98.51 * 30.29 * .219 * .219} = 95.09 \text{ PERCENT}$$

PARTICULATE LOADING -- EPA METHOD 5 (AT STANDARD CONDITIONS)

CS = 0.001 * MN * 15.43 / VMSTD

CS = 0.001 * 84.7 * 15.43 / 101.564 = .0129 GR/DSCF

FIELD DATA

PLANT	PHILLIPS SWEENEY	DATE	11/13/82
SAMPLING LOCATION	FCC STACK	RUN NUMBER	8BM545
SAMPLE TYPE	M5-450	PROBE LENGTH & TYPE	6' GLASS
OPERATOR	DD	NOZZLE I.D.	.223
AMBIENT TEMP.(DEG.F)	50.	ASSUMED MOISTURE	8.0
BAR.PRESS.(IN.HG)	30.39	SAMPLE BOX NUMBER	
STATIC PRESS.(IN.H2O)	-1.38	METER BOX NUMBER	FB5
FILTER NUMBER(S)	3450171	METER HEAD DIFF.	1.95
STACK INSIDE DIM.(IN)	108.00 .00		
PITOT TUBE COEFF.	.84	PROBE HEATER SETTING	450.
THERM. NO.		HEATER BOX SETTING	450.
LEAKAGE	.020 CFM @ 12.5 IN.HG		
METER CALIB. FACTOR	.988		

READ & RECORD DATA EVERY 10.0 MINUTES

TRAVERSE POINT NO.	SAMPLE TIME (MIN.)	CLOCK TIME (24-HR CLOCK)	GAS METER READING (CU.FT.)	VELOCITY HEAD (IN.H2O)	ORIFICE PRESSURE DIFFERENTIAL (IN.H2O) DESIRED	ACTUAL	STACK TEMP (DEG.F)	DRY GAS METER TEMP (DEG.F) INLET	OUTLET	PUMP VACUUM (IN.HG)	SAMPLE BOX TEMP (DEG.F)	IMPINGER TEMP (DEG.F)
INIT	0	1204	536.601									
	10.0	0	545.780	1.950	2.91	2.91	424.	76.	71.	10.2	0.	0.
	20.0	0	554.890	1.900	2.84	2.84	424.	79.	73.	10.7	0.	109.
	30.0	0	563.930	1.900	2.86	2.86	424.	83.	75.	10.4	0.	118.
	40.0	0	573.100	1.950	2.96	2.96	425.	89.	77.	10.7	0.	114.
	50.0	0	582.020	1.950	2.96	2.96	425.	91.	79.	10.2	0.	97.
	60.0	0	590.930	1.900	2.89	2.89	424.	93.	81.	10.1	0.	95.
	70.0	0	599.900	1.950	2.97	2.97	424.	93.	82.	10.2	0.	87.
	80.0	0	608.890	1.950	2.97	2.97	423.	95.	83.	10.4	0.	90.
	90.0	0	617.810	1.900	2.90	2.90	423.	95.	84.	10.6	0.	92.
	100.0	0	626.760	1.900	2.90	2.90	424.	95.	85.	10.8	0.	103.
	110.0	0	635.850	1.950	2.98	2.98	424.	97.	86.	11.0	0.	101.
	120.0	1404	644.913	1.950	2.99	2.99	424.	98.	87.	11.2	0.	95.
TOTALS	120.0		108.312									
AVERAGE					2.93	2.93	424.	90.	80.	10.5	0.	92.

PARTICULATE FIELD DATA & RESULTS TABULATION

PLANT- NAME AND ADDRESS — TEST TEAM LEADER

PHILLIPS SWEENEY — DO

TEST 88M545 FCC STACK

		ENGLISH UNITS	METRIC UNITS
TEST DATE		11/13/82	11/13/82
TB	TIME-START	1204	1204
TF	TIME-FINISH	1404	1404
TT	NET TIME OF TEST, MIN.	120.0	120.0
NP	NET SAMPLING POINTS	12	12
Y	METER CALIBRATION FACTOR	.988	.988
DN	SAMPLING NOZZLE DIAMETER	.223 IN	5.7 MM
CP	PITOT TUBE COEFFICIENT	.84	.84
PM	AVERAGE ORIFICE PRESSURE DROP	2.93 IN-H2O	74.4 MM-H2O
VM	VOLUME OF DRY GAS SAMPLED AT METER CONDITIONS	108.312 CU-FT	3.067 CU-M
TM	AVERAGE GAS METER TEMP	85.3 F	29.6 C
VMSTD	VOLUME OF DRY GAS SAMPLED AT STANDARD CONDITIONS*	105.992 SCF	3.001 SCM
VLC	TOTAL H2O COLLECTED IN IMPINGERS AND SILICA GEL,ML.	163.9	163.9
VWC	VOLUME OF WATER VAPOR AT STANDARD CONDITIONS*	7.715 SCF	.218 SCM
BWO	PERCENT MOISTURE BY VOLUME	6.78	6.78
FMD	MOLE FRACTION DRY GAS	.932	.932
PCO2	PERCENT CO2 BY VOL., DRY	15.00	15.00
PO2	PERCENT O2 BY VOL., DRY	3.00	3.00
PCO	PERCENT CO BY VOL., DRY	.00	.00
PN2	PERCENT N2 BY VOL., DRY	82.00	82.00
MD	MOLECULAR WT-DRY STACK GAS	30.52	30.52
MWS	MOLECULAR WT-STACK GAS	29.67	29.67

PB	BAROMETRIC PRESSURE	30.39	IN-HG	771.91	MM-HG
PSI	STATIC PRES OF STACK GAS	-1.38	IN-H2O	-35.05	MM-H2O
PS	STACK PRES, ABS.	30.29	IN-HG	769.33	MM-HG
TS	AVERAGE STACK TEMP	424.	F	218.	C
VS	AVG STACK GAS VELOCITY	98.9	FPS	30.2	MPS
AS	STACK AREA	9161.	SQ-IN	5.910	SQ-M
QSSTD	STACK FLOW RATE, DRY*	12768966.	SCFH	361579.	SCMH
QS	ACTUAL STACK FLOW RATE	22655428.	ACFH	641534.	ACMH
ISO	PERCENT ISOKINETIC	97.4		97.4	
MN	FILTERABLE-AMBIENT MG. EPA 5	85.2		85.2	
CS	FILTERABLE-AMBIENT	.0124	GR/DSCF*	28.390	MG/DSCM
MN	FILTERABLE-315 MG. EPA 5	71.3		71.3	
CS	FILTERABLE-315	.0104	GR/DSCF*	23.758	MG/DSCM

* 68 DEG F, 29.92 IN.HG.

EXAMPLE PARTICULATE CALCULATIONS TEST NO.8BM545

FCC STACK

VOLUME OF DRY GAS SAMPLED AT STANDARD CONDITIONS

VMSTD = (17.647 * VM * Y * (PB + PM / 13.6)) / (TM + 460.)

$$VMSTD = \frac{17.647 * 108.312 * .988 * (30.39 + 2.928 / 13.6)}{(85. + 460.)} = 105.992 \text{ DSCF}$$

VOLUME OF WATER VAPOR AT STANDARD CONDITIONS

VWC = .04707 * VLC

VWC = .04707 * 164. = 7.71 SCF

PERCENT MOISTURE IN STACK GAS

BWO = (100. * VWC) / (VMSTD + VWC)

$$BWO = \frac{100. * 7.71}{105.992 + 7.71} = 6.78 \text{ PERCENT}$$

MOLE FRACTION OF DRY STACK GAS

FMD = (100. - BWO) / 100.

$$FMD = \frac{100. - 6.8}{100.} = .932$$

AVERAGE MOLECULAR WEIGHT OF DRY STACK GAS

MD = (PCO2 * .44) + (PO2 * .32) + (PN2 + PCO) * .28

MD = (15.00*44/100) + (3.0*32/100) + ((82.0+ .0) * 28/100 = 30.52

MOLECULAR WEIGHT OF STACK GAS

MWS = MD * (1. - (BWO/100)) + 18. * (BWO/100)

MWS = 30.52* (1. -(6.78/100)) + 18. * (6.78/100) = 29.67

STACK GAS VELOCITY AT STACK CONDITIONS

DELP = SUM. OF THE SQRT(VH * (TS + 460.))

VS = 85.49 * CP * DELP / (SQRT(MWS * PS) * PNTS)

VS = 85.49 * .84 * 495.546 / (SQRT(29.67 * 30.29) * 12. = 98.92 FPS

STACK GAS VOLUMETRIC FLOW AT STACK CONDITIONS

QS = VS * AS * 3600/144

QS = 98.92 * 9161. 3600/144 = 22655428. ACFH

STACK GAS VOLUMETRIC FLOW AT STANDARD CONDITIONS

QSSTD = 17.647 * QS * PS * (1. - (BWO/100)) / (TS + 460.)

$$QSSTD = \frac{17.647 * 22655428. * 30.29 * (1. - (6.78/100))}{(424. + 460.)} = 12768966. \text{ SCFH}$$

PERCENT ISOKINETIC

ISO = (305.58*(TS+460.))*((0.002669*VLC)+(VM*Y*(PB+(PM/13.6))/(TM+460.)))/(TT*VS*PS*DN*DN)

$$ISO = \frac{(305.58*(424.+460.))*((0.002669* 164.)+(108.312* .988*(30.39+(2.928/13.6))/(85.+460.)))}{120. * 98.92 * 30.29 * .223 * .223} = 97.35 \text{ PERCENT}$$

PARTICULATE LOADING -- EPA METHOD 5 (AT STANDARD CONDITIONS)

CS = 0.001 * MN * 15.43 / VMSTD

CS = 0.001 * 85.2 * 15.43 / 105.992 = .0124 GR/DSCF

FIELD DATA

PLANT	PHILLIPS PETRO SWEENY	DATE	11/13/82
SAMPLING LOCATION	FCC STACK	RUN NUMBER	8CM5A
SAMPLE TYPE	M5	PROBE LENGTH & TYPE	6 FT GLASS
OPERATOR	PHILLIPS	NOZZLE : I.D.	.224
AMBIENT TEMP.(DEG.F)	65.	ASSUMED MOISTURE	12.0
BAR.PRESS.(IN.HG)	30.39	SAMPLE BOX NUMBER	
STATIC PRESS.(IN.H2O)	-1.38	METER BOX NUMBER	FB7
FILTER NUMBER(S)	3450136	METER HEAD DIFF.	1.71
STACK INSIDE DIM.(IN)	108.00 .00		
PITOT TUBE COEFF.	.84	PROBE HEATER SETTING	250.
THERM. NO.		HEATER BOX SETTING	250.
LEAKAGE	.010 CFM @ 14.0 IN.HG		
METER CALIB. FACTOR	1.001		
READ & RECORD DATA EVERY 10.0 MINUTES			

TRAVERSE POINT NO.	SAMPLE TIME (MIN.)	CLOCK TIME (24-HR CLOCK)	GAS METER READING (CU.FT.)	VELOCITY HEAD (IN.H2O)	ORIFICE PRESSURE DIFFERENTIAL (IN.H2O) DESIRED	ORIFICE PRESSURE DIFFERENTIAL (IN.H2O) ACTUAL	STACK TEMP (DEG.F)	DRY GAS METER TEMP (DEG.F) INLET	DRY GAS METER TEMP (DEG.F) OUTLET	PUMP VACUUM (IN.HG)	SAMPLE BOX TEMP (DEG.F)	IMPINGER TEMP (DEG.F)
INIT	0	1340	363.537									
	10.0	1350	373.350	2.400	3.10	3.10	422.	64.	62.	10.0	0.	78.
	20.0	1400	383.080	2.400	3.10	3.10	420.	64.	62.	9.5	0.	82.
	30.0	1410	392.870	2.400	3.10	3.10	419.	68.	62.	9.5	0.	78.
	40.0	1420	402.840	2.400	3.10	3.10	420.	71.	63.	9.5	0.	83.
	50.0	1430	412.710	2.400	3.10	3.10	419.	73.	64.	8.0	0.	86.
	60.0	1440	422.490	2.400	3.10	3.10	419.	74.	64.	7.5	0.	88.
	70.0	1450	432.230	2.400	3.10	3.10	420.	74.	64.	7.5	0.	80.
	80.0	1500	442.000	2.400	3.10	3.10	420.	74.	64.	7.5	0.	77.
	90.0	1510	451.840	2.400	3.10	3.10	420.	76.	66.	7.5	0.	82.
	100.0	1520	461.440	2.400	3.10	3.10	420.	76.	66.	8.2	0.	88.
	110.0	1530	471.290	2.400	3.10	3.10	419.	76.	65.	10.2	0.	84.
	120.0	1540	481.126	2.400	3.10	3.10	419.	76.	67.	11.2	0.	76.
TOTALS	120.0		117.589									
AVERAGE					3.10	3.10	420.	72.	64.	8.8	0.	82.

PARTICULATE FIELD DATA & RESULTS TABULATION

PLANT- NAME AND ADDRESS — TEST TEAM LEADER

PHILLIPS PETRO SWEENY — PHILLIPS

TEST 8CM5W FCC STACK

		ENGLISH UNITS	METRIC UNITS
TEST DATE		11/13/82	11/13/82
TB	TIME-START	1340	1340
TF	TIME-FINISH	1540	1540
TT	NET TIME OF TEST, MIN.	120.0	120.0
NP	NET SAMPLING POINTS	12	12
Y	METER CALIBRATION FACTOR	1.001	1.001
DN	SAMPLING NOZZLE DIAMETER	.224 IN	5.7 MM
CP	PITOT TUBE COEFFICIENT	.84	.84
PM	AVERAGE ORIFICE PRESSURE DROP	3.10 IN-H2O	78.7 MM-H2O
VM	VOLUME OF DRY GAS SAMPLED AT METER CONDITIONS	117.589 CU-FT	3.330 CU-M
TM	AVERAGE GAS METER TEMP	68.1 F	20.1 C
VMSTD	VOLUME OF DRY GAS SAMPLED AT STANDARD CONDITIONS*	120.423 SCF	3.410 SCM
VLC	TOTAL H2O COLLECTED IN IMPINGERS AND SILICA GEL,ML.	304.6	304.6
VWC	VOLUME OF WATER VAPOR AT STANDARD CONDITIONS*	14.338 SCF	.406 SCM
BWO	PERCENT MOISTURE BY VOLUME	10.64	10.64
FMD	MOLE FRACTION DRY GAS	.894	.894
PCO2	PERCENT CO2 BY VOL., DRY	15.00	15.00
PO2	PERCENT O2 BY VOL., DRY	3.00	3.00
PCO	PERCENT CO BY VOL., DRY	.00	.00
PN2	PERCENT N2 BY VOL., DRY	82.00	82.00
MD	MOLECULAR WT-DRY STACK GAS	30.52	30.52
MWS	MOLECULAR WT-STACK GAS	29.19	29.19

PB	BAROMETRIC PRESSURE	30.39	IN-HG	771.91	MM-HG
PSI	STATIC PRES OF STACK GAS	-1.38	IN-H2O	-35.05	MM-H2O
PS	STACK PRES, ABS.	30.29	IN-HG	769.33	MM-HG
TS	AVERAGE STACK TEMP	420.	F	215.	C
VS	AVG STACK GAS VELOCITY	111.0	FPS	33.8	MPS
AS	STACK AREA	9161.	SQ-IN	5.910	SQ-M
QSSTD	STACK FLOW RATE, DRY*	13799160.	SCFH	390751.	SCMH
QS	ACTUAL STACK FLOW RATE	25416508.	ACFH	719719.	ACMH
ISO	PERCENT ISOKINETIC	101.4		101.4	

* 68 DEG F, 29.92 IN.HG.

EXAMPLE PARTICULATE CALCULATIONS TEST NO. 8CMSW

FCC STACK

VOLUME OF DRY GAS SAMPLED AT STANDARD CONDITIONS

VMSTD = (17.647 * VM * Y * (PB + PM / 13.6)) / (TM + 460.)

$$VMSTD = \frac{17.647 * 117.589 * 1.001 * (30.39 + 3.100 / 13.6)}{(68. + 460.)} = 120.423 \text{ DSCF}$$

VOLUME OF WATER VAPOR AT STANDARD CONDITIONS

VWC = .04707 * VLC

VWC = .04707 * 305. = 14.34 SCF

PERCENT MOISTURE IN STACK GAS

BWO = (100. * VWC) / (VMSTD + VWC)

$$BWO = \frac{100. * 14.34}{120.423 + 14.34} = 10.64 \text{ PERCENT}$$

MOLE FRACTION OF DRY STACK GAS

FMD = (100. - BWO) / 100.

$$FMD = \frac{100. - 10.6}{100.} = .894$$

AVERAGE MOLECULAR WEIGHT OF DRY STACK GAS

MD = (PCO2 * .44) + (PO2 * .32) + (PN2 + PCO) * .28

MD = (15.00*44/100) + (3.0*32/100) + ((82.0+ .0) * 28/100 = 30.52

MOLECULAR WEIGHT OF STACK GAS

MWS = MD * (1. - (BWO/100)) + 18. * (BWO/100)

MWS = 30.52* (1. -(10.64/100)) + 18. * (10.64/100) = 29.19

STACK GAS VELOCITY AT STACK CONDITIONS

DELP = SUM. OF THE SQRT(VH * (TS + 460.))

VS = 85.49 * CP * DELP / (SQRT(MWS * PS) * PNTS)

VS = 85.49 * .84 * 551.400 / (SQRT(29.19 * 30.29) * 12. = 110.98 FPS

STACK GAS VOLUMETRIC FLOW AT STACK CONDITIONS

QS = VS * AS * 3600/144

QS = 110.98 * 9161. 3600/144 = 25416508. ACFH

STACK GAS VOLUMETRIC FLOW AT STANDARD CONDITIONS

QSSTD = 17.647 * QS * PS * (1. - (BWO/100)) / (TS + 460.)

$$QSSTD = \frac{17.647 * 25416508. * 30.29 * (1. - (10.64/100))}{(420. + 460.)} = 13799160. \text{ SCFH}$$

PERCENT ISOKINETIC

ISO = (305.58*(TS+460.))*((0.002669*VLC)+(VM*Y*(PB+(PM/13.6))/(TM+460.)))/(TT*VS*PS*DN*DN)

$$ISO = \frac{(305.58*(420.+460.))*((0.002669* 305.)+(117.589*1.001*(30.39+(3.100/13.6))/(68.+460.)))}{120. * 110.98 * 30.29 * .224 * .224} = 101.44 \text{ PERCENT}$$

PARTICULATE LOADING -- EPA METHOD 5 (AT STANDARD CONDITIONS)

CS = 0.001 * MN * 15.43 / VMSTD

CS = 0.001 * 0.0000E+00 * 15.43 / 120.423 = 0.0000E+00 GR/DSCF

FIELD DATA

PLANT	PHILLIPS PETRO SWEENY	DATE	11/13/82
SAMPLING LOCATION	FCC STACK	RUN NUMBER	8DM5A
SAMPLE TYPE	M5	PROBE LENGTH & TYPE	6 FT GLASS
OPERATOR	PHILLIPS	NOZZLE : I.D.	.227
AMBIENT TEMP.(DEG.F)	65.	ASSUMED MOISTURE	12.0
BAR.PRESS.(IN.HG)	30.39	SAMPLE BOX NUMBER	
STATIC PRESS.(IN.H2O)	-1.38	METER BOX NUMBER	FB2
FILTER NUMBER(S)	3450135	METER HEAD DIFF.	1.73
STACK INSIDE DIM.(IN)	108.00 .00		
PITOT TUBE COEFF.	.84	PROBE HEATER SETTING	250.
THERM. NO.		HEATER BOX SETTING	250.
LEAKAGE	.000 CFM @ 12.5 IN.HG		
METER CALIB. FACTOR	.986		

READ & RECORD DATA EVERY 10.0 MINUTES

TRAVERSE POINT NO.	SAMPLE TIME (MIN.)	CLOCK TIME (24-HR CLOCK)	GAS METER READING (CU.FT.)	VELOCITY HEAD (IN.H2O)	ORIFICE PRESSURE DIFFERENTIAL (IN.H2O) DESIRED	ORIFICE PRESSURE DIFFERENTIAL (IN.H2O) ACTUAL	STACK TEMP (DEG.F)	DRY GAS METER TEMP (DEG.F) INLET	DRY GAS METER TEMP (DEG.F) OUTLET	PUMP VACUUM (IN.HG)	SAMPLE BOX TEMP (DEG.F)	IMPINGER TEMP (DEG.F)
INIT	0	1342	313.856									
	10.0	1352	323.440	2.400	3.00	3.00	422.	60.	60.	7.0	0.	80.
	20.0	1402	333.120	2.400	3.00	3.00	420.	60.	60.	7.2	0.	84.
	30.0	1412	343.010	2.400	3.10	3.10	419.	70.	61.	7.2	0.	94.
	40.0	1422	352.850	2.400	3.10	3.10	420.	70.	67.	7.2	0.	98.
	50.0	1432	362.120	2.400	3.10	3.10	419.	68.	64.	7.0	0.	88.
	60.0	1442	372.040	2.400	3.10	3.10	419.	70.	64.	7.5	0.	76.
	70.0	1452	381.800	2.400	3.10	3.10	420.	70.	64.	9.7	0.	72.
	80.0	1502	391.410	2.400	3.10	3.10	420.	70.	64.	10.0	0.	75.
	90.0	1512	401.130	2.400	3.10	3.10	420.	71.	64.	10.0	0.	78.
	100.0	1522	410.830	2.400	3.10	3.10	420.	71.	64.	10.5	0.	83.
	110.0	1532	420.540	2.400	3.10	3.10	419.	71.	65.	11.3	0.	74.
	120.0	1542	430.349	2.400	3.10	3.10	419.	71.	65.	11.5	0.	78.
TOTALS	120.0		116.493									
AVERAGE					3.08	3.08	420.	69.	64.	8.8	0.	82.

PARTICULATE FIELD DATA & RESULTS TABULATION

PLANT- NAME AND ADDRESS — TEST TEAM LEADER

PHILLIPS PETRO SWEENY — PHILLIPS

TEST 80M5W FCC STACK

		ENGLISH UNITS	METRIC UNITS
TEST DATE		11/13/82	11/13/82
TB	TIME-START	1342	1342
TF	TIME-FINISH	1542	1542
TT	NET TIME OF TEST, MIN.	120.0	120.0
NP	NET SAMPLING POINTS	12	12
Y	METER CALIBRATION FACTOR	.986	.986
DN	SAMPLING NOZZLE DIAMETER	.227 IN	5.8 MM
CP	PITOT TUBE COEFFICIENT	.84	.84
PM	AVERAGE ORIFICE PRESSURE DROP	3.08 IN-H2O	78.3 MM-H2O
VM	VOLUME OF DRY GAS SAMPLED AT METER CONDITIONS	116.493 CU-FT	3.299 CU-M
TM	AVERAGE GAS METER TEMP	66.0 F	18.9 C
VMSTD	VOLUME OF DRY GAS SAMPLED AT STANDARD CONDITIONS*	117.983 SCF	3.341 SCM
VLC	TOTAL H2O COLLECTED IN IMPINGERS AND SILICA GEL,ML.	303.9	303.9
VWC	VOLUME OF WATER VAPOR AT STANDARD CONDITIONS*	14.305 SCF	.405 SCM
BWO	PERCENT MOISTURE BY VOLUME	10.81	10.81
FMD	MOLE FRACTION DRY GAS	.892	.892
PCO2	PERCENT CO2 BY VOL., DRY	15.00	15.00
PO2	PERCENT O2 BY VOL., DRY	3.00	3.00
PCO	PERCENT CO BY VOL., DRY	.00	.00
PN2	PERCENT N2 BY VOL., DRY	82.00	82.00
MD	MOLECULAR WT-DRY STACK GAS	30.52	30.52
MWS	MOLECULAR WT-STACK GAS	29.17	29.17

PB	BAROMETRIC PRESSURE	30.39	IN-HG	771.91	MM-HG
PSI	STATIC PRES OF STACK GAS	-1.38	IN-H2O	-35.05	MM-H2O
PS	STACK PRES, ABS.	30.29	IN-HG	769.33	MM-HG
TS	AVERAGE STACK TEMP	420.	F	215.	C
VS	AVG STACK GAS VELOCITY	111.0	FPS	33.8	MPS
AS	STACK AREA	9161.	SQ-IN	5.910	SQ-M
QSSTD	STACK FLOW RATE, DRY*	13777432.	SCFH	390136.	SCMH
QS	ACTUAL STACK FLOW RATE	25425996.	ACFH	719988.	ACMH
ISO	PERCENT ISOKINETIC	96.9		96.9	

* 68 DEG F, 29.92 IN.HG.

EXAMPLE PARTICULATE CALCULATIONS TEST NO. 80M5W

FCC STACK

VOLUME OF DRY GAS SAMPLED AT STANDARD CONDITIONS

VMSTD = (17.647 * VM * Y * (PB + PM / 13.6)) / (TM + 460.)

$$VMSTD = \frac{17.647 * 116.493 * .986 * (30.39 + 3.083 / 13.6)}{(66. + 460.)} = 117.983 \text{ DSCF}$$

VOLUME OF WATER VAPOR AT STANDARD CONDITIONS

VWC = .04707 * VLC

VWC = .04707 * 304. = 14.30 SCF

PERCENT MOISTURE IN STACK GAS

BWO = (100. * VWC) / (VMSTD + VWC)

$$BWO = \frac{100. * 14.30}{117.983 + 14.30} = 10.81 \text{ PERCENT}$$

MOLE FRACTION OF DRY STACK GAS

FMD = (100. - BWO) / 100.

$$FMD = \frac{100. - 10.8}{100.} = .892$$

AVERAGE MOLECULAR WEIGHT OF DRY STACK GAS

MD = (PCO2 * .44) + (PO2 * .32) + (PN2 + PCO) * .28

MD = (15.00*44/100) + (3.0*32/100) + ((82.0+ .0) * 28/100 = 30.52

MOLECULAR WEIGHT OF STACK GAS

MWS = MD * (1. - (BWO/100)) + 18. * (BWO/100)

MWS = 30.52* (1. -(10.81/100)) + 18. * (10.81/100) = 29.17

STACK GAS VELOCITY AT STACK CONDITIONS

DELP = SUM. OF THE SQRT(VH * (TS + 460.))

VS = 85.49 * CP * DELP / (SQRT(MWS * PS) * PNTS)

VS = 85.49 * .84 * 551.400 / (SQRT(29.17 * 30.29) * 12. = 111.02 FPS

STACK GAS VOLUMETRIC FLOW AT STACK CONDITIONS

QS = VS * AS * 3600/144

QS = 111.02 * 9161. 3600/144 = 25425996. ACFH

STACK GAS VOLUMETRIC FLOW AT STANDARD CONDITIONS

QSSTD = 17.647 * QS * PS * (1. - (BWO/100)) / (TS + 460.)

$$QSSTD = \frac{17.647 * 25425996. * 30.29 * (1. - (10.81/100))}{(420. + 460.)} = 13777432. \text{ SCFH}$$

PERCENT ISOKINETIC

ISO = (305.58*(TS+460.))*((0.002669*VLC)+(VM*Y*(PB+(PM/13.6))/(TM+460.)))/(TT*VS*PS*DN*DN)

$$ISO = \frac{(305.58*(420.+460.))*((0.002669* 304.)+(116.493* .986*(30.39+(3.083/13.6))/(66.+460.)))}{120. * 111.02 * 30.29 * .227 * .227} = 96.93 \text{ PERCENT}$$

PARTICULATE LOADING -- EPA METHOD 5 (AT STANDARD CONDITIONS)

CS = 0.001 * MN * 15.43 / VMSTD

CS = 0.001 * 0.0000E+00 * 15.43 / 117.983 = 0.0000E+00 GR/DSCF

FIELD DATA

PLANT	PHILLIPS SWEENY	DATE	11/15/82
SAMPLING LOCATION	FCC STACK	RUN NUMBER	9AM5
SAMPLE TYPE	M5	PROBE LENGTH & TYPE	6' GLASS
OPERATOR	DD	NOZZLE : I.D.	.222
AMBIENT TEMP.(DEG.F)	50.	ASSUMED MOISTURE	8.0
BAR.PRESS.(IN.HG)	30.34	SAMPLE BOX NUMBER	
STATIC PRESS.(IN.H2O)	-1.38	METER BOX NUMBER	FB3
FILTER NUMBER(S)	3450207	METER HEAD DIFF.	2.00
STACK INSIDE DIM.(IN)	108.00 .00		
PITOT TUBE COEFF.	.84	PROBE HEATER SETTING	250.
THERM. NO.		HEATER BOX SETTING	250.
LEAKAGE	.002 CFM @ 7.5 IN.HG		
METER CALIB. FACTOR	1.006		

READ & RECORD DATA EVERY 10.0 MINUTES

TRAVERSE POINT NO.	SAMPLE TIME (MIN.)	CLOCK TIME (24-HR CLOCK)	GAS METER READING (CU.FT.)	VELOCITY HEAD (IN.H2O)	ORIFICE PRESSURE DIFFERENTIAL (IN.H2O) DESIRED	ORIFICE PRESSURE DIFFERENTIAL (IN.H2O) ACTUAL	STACK TEMP (DEG.F)	DRY GAS METER TEMP (DEG.F) INLET	DRY GAS METER TEMP (DEG.F) OUTLET	PUMP VACUUM (IN.HG)	SAMPLE BOX TEMP (DEG.F)	IMPINGER TEMP (DEG.F)
INIT	0	1016	966.966									
	10.0	0	975.270	1.900	2.77	2.77	417.	55.	52.	5.8	0.	0.
	20.0	0	983.440	1.900	2.79	2.79	417.	59.	53.	5.7	0.	65.
	30.0	0	991.700	1.900	2.81	2.81	417.	67.	55.	5.7	0.	106.
	40.0	0	.070	1.950	2.90	2.90	417.	70.	57.	5.8	0.	116.
	50.0	0	8.440	1.900	2.84	2.84	417.	72.	59.	5.8	0.	107.
	60.0	0	16.760	1.900	2.85	2.85	417.	72.	59.	5.8	0.	82.
	70.0	0	25.140	1.900	2.85	2.85	417.	73.	59.	5.9	0.	73.
	80.0	0	33.600	1.950	2.93	2.93	417.	75.	59.	6.1	0.	75.
	90.0	0	41.940	1.900	2.86	2.86	417.	75.	60.	6.0	0.	73.
	100.0	0	50.430	1.950	2.94	2.94	417.	75.	61.	6.3	0.	73.
	110.0	0	58.920	1.950	2.94	2.94	417.	78.	62.	6.3	0.	76.
	120.0	1216	67.302	1.900	2.88	2.88	417.	82.	65.	6.3	0.	75.
TOTALS	120.0		100.336									
AVERAGE					2.86	2.86	417.	71.	58.	6.0	0.	77.

PARTICULATE FIELD DATA & RESULTS TABULATION

PLANT- NAME AND ADDRESS TEST TEAM LEADER

PHILLIPS SWEENY DO

TEST 9AM5 FCC STACK

		ENGLISH UNITS	METRIC UNITS
TEST DATE		11/15/82	11/15/82
TB	TIME-START	1016	1016
TF	TIME-FINISH	1216	1216
TT	NET TIME OF TEST, MIN.	120.0	120.0
NP	NET SAMPLING POINTS	12	12
Y	METER CALIBRATION FACTOR	1.006	1.006
DN	SAMPLING NOZZLE DIAMETER	.222 IN	5.6 MM
CP	PITOT TUBE COEFFICIENT	.84	.84
PM	AVERAGE ORIFICE PRESSURE DROP	2.86 IN-H2O	72.7 MM-H2O
VM	VOLUME OF DRY GAS SAMPLED AT METER CONDITIONS	100.336 CU-FT	2.841 CU-M
TM	AVERAGE GAS METER TEMP	64.8 F	18.2 C
VMSTD	VOLUME OF DRY GAS SAMPLED AT STANDARD CONDITIONS*	103.703 SCF	2.937 SCM
VLC	TOTAL H2O COLLECTED IN IMPINGERS AND SILICA GEL,ML.	219.3	219.3
VWC	VOLUME OF WATER VAPOR AT STANDARD CONDITIONS*	10.322 SCF	.292 SCM
BWO	PERCENT MOISTURE BY VOLUME	9.05	9.05
FMD	MOLE FRACTION DRY GAS	.909	.909
PCO2	PERCENT CO2 BY VOL., DRY	12.20	12.20
PO2	PERCENT O2 BY VOL., DRY	4.60	4.60
PCO	PERCENT CO BY VOL., DRY	.00	.00
PN2	PERCENT N2 BY VOL., DRY	83.20	83.20
MD	MOLECULAR WT-DRY STACK GAS	30.14	30.14
MWS	MOLECULAR WT-STACK GAS	29.04	29.04

PB	BAROMETRIC PRESSURE	30.34	IN-HG	770.64	MM-HG
PSI	STATIC PRES OF STACK GAS	-1.38	IN-H2O	-35.05	MM-H2O
PS	STACK PRES, ABS.	30.24	IN-HG	768.06	MM-HG
TS	AVERAGE STACK TEMP	417.	F	214.	C
VS	AVG STACK GAS VELOCITY	99.4	FPS	30.3	MPS
AS	STACK AREA	9161.	SQ-IN	5.910	SQ-M
QSSTD	STACK FLOW RATE, DRY*	12592136.	SCFH	356572.	SCMH
QS	ACTUAL STACK FLOW RATE	22755056.	ACFH	644355.	ACMH
ISO	PERCENT ISOKINETIC	97.5		97.5	
MN	FILTERABLE-AMBIENT MG. EPA 5	280.6		280.6	
CS	FILTERABLE-AMBIENT	.0418	GR/DSCF*	95.563	MG/DSCM
MN	FILTERABLE-315 MG. EPA 5	73.0		73.0	
CS	FILTERABLE-315	.0109	GR/DSCF*	24.861	MG/DSCM

* 68 DEG F, 29.92 IN.HG.

EXAMPLE PARTICULATE CALCULATIONS TEST NO. 9AM5

FCC STACK

VOLUME OF DRY GAS SAMPLED AT STANDARD CONDITIONS

VMSTD = (17.647 * VM * Y * (PB + PM / 13.6)) / (TM + 460.)

$$VMSTD = \frac{17.647 * 100.336 * 1.006 * (30.34 + 2.863 / 13.6)}{(65. + 460.)} = 103.703 \text{ DSCF}$$

VOLUME OF WATER VAPOR AT STANDARD CONDITIONS

VWC = .04707 * VLC

VWC = .04707 * 219. = 10.32 SCF

PERCENT MOISTURE IN STACK GAS

BWO = (100. * VWC) / (VMSTD + VWC)

$$BWO = \frac{100. * 10.32}{103.703 + 10.32} = 9.05 \text{ PERCENT}$$

MOLE FRACTION OF DRY STACK GAS

FMD = (100. - BWO) / 100.

$$FMD = \frac{100. - 9.1}{100.} = .909$$

AVERAGE MOLECULAR WEIGHT OF DRY STACK GAS

MD = (PCO2 * .44) + (PO2 * .32) + (PN2 + PCO) * .28

MD = (12.20*44/100) + (4.6*32/100) + ((83.2+ .0) * 28/100 = 30.14

MOLECULAR WEIGHT OF STACK GAS

MWS = MD * (1. - (BWO/100)) + 18. * (BWO/100)

MWS = 30.14* (1. -(9.05/100)) + 18. * (9.05/100) = 29.04

STACK GAS VELOCITY AT STACK CONDITIONS

DELP = SUM. OF THE SQRT(VH * (TS + 460.))

VS = 85.49 * CP * DELP / (SQRT(MWS * PS) * PNTS)

VS = 85.49 * .84 * 491.979 / (SQRT(29.04 * 30.24) * 12. = 99.36 FPS

STACK GAS VOLUMETRIC FLOW AT STACK CONDITIONS

QS = VS * AS * 3600/144

QS = 99.36 * 9161. 3600/144 = 22755056. ACFM

STACK GAS VOLUMETRIC FLOW AT STANDARD CONDITIONS

QSSTD = 17.647 * QS * PS * (1. - (BWO/100)) / (TS + 460.)

$$QSSTD = \frac{17.647 * 22755056. * 30.24 * (1. - (9.05/100))}{(417. + 460.)} = 12592136. \text{ SCFM}$$

PERCENT ISOKINETIC

ISO = (305.58*(TS+460.))*((0.002669*VLC)+(VM*Y*(PB+(PM/13.6))/(TM+460.)))/(TT*VS*PS*DN*DN)

$$ISO = \frac{(305.58*(417.+460.))*((0.002669* 219.)+(100.336*1.006*(30.34+(2.863/13.6))/(65.+460.)))}{120. * 99.36 * 30.24 * .222 * .222} = 97.46 \text{ PERCENT}$$

PARTICULATE LOADING -- EPA METHOD 5 (AT STANDARD CONDITIONS)

CS = 0.001 * MN * 15.43 / VMSTD

CS = 0.001 * 280.6 * 15.43 / 103.703 = .0418 GR/DSCF

FIELD DATA

PLANT	PHILLIPS SWEENY	DATE	11/15/82
SAMPLING LOCATION	FCC STACK	RUN NUMBER	98M5
SAMPLE TYPE	M5	PROBE LENGTH & TYPE	6' GLASS
OPERATOR	DO	NOZZLE : I.D.	.221
AMBIENT TEMP.(DEG.F)	50.	ASSUMED MOISTURE	8.0
BAR.PRESS.(IN.HG)	30.34	SAMPLE BOX NUMBER	
STATIC PRESS.(IN.H2O)	-1.38	METER BOX NUMBER	FB5
FILTER NUMBER(S)	3450205	METER HEAD DIFF.	1.95
STACK INSIDE DIM.(IN)	108.00 .00		
PITOT TUBE COEFF.	.84	PROBE HEATER SETTING	250.
THERM. NO.		HEATER BOX SETTING	250.
LEAKAGE	.018 CFM @ 14.0 IN.HG		
METER CALIB. FACTOR	.988		

READ & RECORD DATA EVERY 10.0 MINUTES

TRAVERSE POINT NO.	SAMPLE TIME (MIN.)	CLOCK TIME (24-HR CLOCK)	GAS METER READING (CU.FT.)	VELOCITY HEAD (IN.H2O)	ORIFICE PRESSURE DIFFERENTIAL (IN.H2O) DESIRED	ORIFICE PRESSURE DIFFERENTIAL (IN.H2O) ACTUAL	STACK TEMP (DEG.F)	DRY GAS METER TEMP (DEG.F) INLET	DRY GAS METER TEMP (DEG.F) OUTLET	PUMP VACUUM (IN.HG)	SAMPLE BOX TEMP (DEG.F)	IMPINGER TEMP (DEG.F)
INIT	0	1017	645.186									
	10.0	0	653.910	1.900	2.77	2.77	417.	59.	54.	9.0	0.	0.
	20.0	0	662.570	1.900	2.79	2.79	417.	65.	56.	9.2	0.	55.
	30.0	0	671.300	1.900	2.81	2.81	417.	70.	59.	9.6	0.	57.
	40.0	0	680.000	1.950	2.90	2.90	417.	72.	61.	9.9	0.	75.
	50.0	0	688.800	1.900	2.84	2.84	417.	76.	63.	11.3	0.	75.
	60.0	0	697.560	1.900	2.85	2.85	417.	77.	64.	11.9	0.	79.
	70.0	0	706.450	1.900	2.85	2.85	417.	79.	66.	12.7	0.	72.
	80.0	0	715.430	1.950	2.93	2.93	417.	80.	68.	13.0	0.	66.
	90.0	0	724.750	1.900	2.86	2.86	417.	79.	69.	12.8	0.	64.
	100.0	0	733.140	1.950	2.94	2.94	417.	79.	70.	13.2	0.	69.
	110.0	0	742.040	1.950	2.94	2.94	417.	80.	71.	13.2	0.	67.
	120.0	1217	750.727	1.900	2.88	2.88	417.	82.	73.	13.2	0.	64.
TOTALS	120.0		105.541									
AVERAGE					2.86	2.86	417.	75.	65.	11.6	0.	62.

PARTICULATE FIELD DATA & RESULTS TABULATION

PLANT- NAME AND ADDRESS — TEST TEAM LEADER

PHILLIPS SWEENY — DD

TEST 98M5 FCC STACK

		ENGLISH UNITS	METRIC UNITS
TEST DATE		11/15/82	11/15/82
TB	TIME-START	1017	1017
TF	TIME-FINISH	1217	1217
TT	NET TIME OF TEST, MIN.	120.0	120.0
NP	NET SAMPLING POINTS	12	12
Y	METER CALIBRATION FACTOR	.988	.988
DN	SAMPLING NOZZLE DIAMETER	.221 IN	5.6 MM
CP	PITOT TUBE COEFFICIENT	.84	.84
PM	AVERAGE ORIFICE PRESSURE DROP	2.86 IN-H2O	72.7 MM-H2O
VM	VOLUME OF DRY GAS SAMPLED AT METER CONDITIONS	105.541 CU-FT	2.989 CU-M
TM	AVERAGE GAS METER TEMP	69.7 F	20.9 C
VMSTD	VOLUME OF DRY GAS SAMPLED AT STANDARD CONDITIONS*	106.137 SCF	3.005 SCM
VLC	TOTAL H2O COLLECTED IN IMPINGERS AND SILICA GEL,ML.	218.4	218.4
VWC	VOLUME OF WATER VAPOR AT STANDARD CONDITIONS*	10.280 SCF	.291 SCM
BWO	PERCENT MOISTURE BY VOLUME	8.83	8.83
FMD	MOLE FRACTION DRY GAS	.912	.912
PCO2	PERCENT CO2 BY VOL., DRY	12.20	12.20
PO2	PERCENT O2 BY VOL., DRY	4.60	4.60
PCO	PERCENT CO BY VOL., DRY	.00	.00
PN2	PERCENT N2 BY VOL., DRY	83.20	83.20
MD	MOLECULAR WT-DRY STACK GAS	30.14	30.14
MWS	MOLECULAR WT-STACK GAS	29.06	29.06

PB	BAROMETRIC PRESSURE	30.34	IN-HG	770.64	MM-HG
PSI	STATIC PRES OF STACK GAS	-1.38	IN-H2O	-35.05	MM-H2O
PS	STACK PRES, ABS.	30.24	IN-HG	768.06	MM-HG
TS	AVERAGE STACK TEMP	417.	F	214.	C
VS	AVG STACK GAS VELOCITY	99.3	FPS	30.3	MPS
AS	STACK AREA	9161.	SQ-IN	5.910	SQ-M
QSSTD	STACK FLOW RATE, DRY*	12617056.	SCFM	357277.	SCMM
QS	ACTUAL STACK FLOW RATE	22744488.	ACFM	644056.	ACMM
ISO	PERCENT ISOKINETIC	100.5		100.5	
MN	FILTERABLE-AMBIENT MG. EPA 5	245.4		245.4	
CS	FILTERABLE-AMBIENT	.0357	GR/DSCF*	81.659	MG/DSCM
MN	FILTERABLE-315 MG. EPA 5	59.6		59.6	
CS	FILTERABLE-315	.0087	GR/DSCF*	19.832	MG/DSCM

* 68 DEG F, 29.92 IN.HG.

EXAMPLE PARTICULATE CALCULATIONS TEST NO. 98M5

FCC STACK

VOLUME OF DRY GAS SAMPLED AT STANDARD CONDITIONS

VMSTD = (17.647 * VM * Y * (PB + PM / 13.6)) / (TM + 460.)

$$VMSTD = \frac{17.647 * 105.541 * .988 * (30.34 + 2.863 / 13.6)}{(70. + 460.)} = 106.137 \text{ DSCF}$$

VOLUME OF WATER VAPOR AT STANDARD CONDITIONS

VWC = .04707 * VLC

VWC = .04707 * 218. = 10.28 SCF

PERCENT MOISTURE IN STACK GAS

BWO = (100. * VWC) / (VMSTD + VWC)

$$BWO = \frac{100. * 10.28}{106.137 + 10.28} = 8.83 \text{ PERCENT}$$

MOLE FRACTION OF DRY STACK GAS

FMD = (100. - BWO) / 100.

$$FMD = \frac{100. - 8.8}{100.} = .912$$

AVERAGE MOLECULAR WEIGHT OF DRY STACK GAS

MD = (PCO2 * .44) + (PO2 * .32) + (PN2 + PCO) * .28

MD = (12.20*44/100) + (4.6*32/100) + ((83.2+ .0) * 28/100 = 30.14

MOLECULAR WEIGHT OF STACK GAS

MWS = MD * (1. - (BWO/100)) + 18. * (BWO/100)

MWS = 30.14* (1. -(8.83/100)) + 18. * (8.83/100) = 29.06

STACK GAS VELOCITY AT STACK CONDITIONS

DELP = SUM. OF THE SQRT(VH * (TS + 460.))

VS = 85.49 * CP * DELP / (SQRT(MWS * PS) * PNTS)

VS = 85.49 * .84 * 491.979 / (SQRT(29.06 * 30.24) * 12. = 99.31 FPS

STACK GAS VOLUMETRIC FLOW AT STACK CONDITIONS

QS = VS * AS * 3600/144

QS = 99.31 * 9161. 3600/144 = 22744488. ACFM

STACK GAS VOLUMETRIC FLOW AT STANDARD CONDITIONS

QSSTD = 17.647 * QS * PS * (1. - (BWO/100)) / (TS + 460.)

$$QSSTD = \frac{17.647 * 22744488. * 30.24 * (1. - (8.83/100))}{(417. + 460.)} = 12617056. \text{ SCFM}$$

PERCENT ISOKINETIC

ISO = (305.58*(TS+460.))*((0.002669*VLC)+(VM*Y*(PB+(PM/13.6))/(TM+460.)))/(TT*VS*PS*DN*DN)

$$ISO = \frac{(305.58*(417.+460.))*((0.002669* 218.)+(105.541* .988*(30.34+(2.863/13.6))/(70.+460.)))}{120. * 99.31 * 30.24 * .221 * .221} = 100.45 \text{ PERCENT}$$

PARTICULATE LOADING -- EPA METHOD 5 (AT STANDARD CONDITIONS)

CS = 0.001 * MN * 15.43 / VMSTD

CS = 0.001 * 245.4 * 15.43 / 106.137 = .0357 GR/DSCF

FIELD DATA

PLANT	PHILLIPS PETRO SWEENY	DATE	11/14/82
SAMPLING LOCATION	FCC STACK	RUN NUMBER	9CM5B
SAMPLE TYPE	M5	PROBE LENGTH & TYPE	6 FT GLASS
OPERATOR	PHILLIPS	NOZZLE : I.D.	.224
AMBIENT TEMP.(DEG.F)	50.	ASSUMED MOISTURE	12.0
BAR.PRESS.(IN.HG)	30.34	SAMPLE BOX NUMBER	
STATIC PRESS.(IN.H2O)	-1.38	METER BOX NUMBER	FB7
FILTER NUMBER(S)	3450206	METER HEAD DIFF.	1.71
STACK INSIDE DIM.(IN)	108.00 .00		
PITOT TUBE COEFF.	.84	PROBE HEATER SETTING	320.
THERM. NO.		HEATER BOX SETTING	320.
LEAKAGE	.015 CFM @ 16.0 IN.HG		
METER CALIB. FACTOR	1.001		

READ & RECORD DATA EVERY 10.0 MINUTES

TRAVERSE POINT NO.	SAMPLE TIME (MIN.)	CLOCK TIME (24-HR CLOCK)	GAS METER READING (CU.FT.)	VELOCITY HEAD (IN.H2O)	ORIFICE PRESSURE DIFFERENTIAL (IN.H2O) DESIRED	ACTUAL	STACK TEMP (DEG.F)	DRY GAS METER TEMP (DEG.F) INLET	OUTLET	PUMP VACUUM (IN.HG)	SAMPLE BOX TEMP (DEG.F)	IMPINGER TEMP (DEG.F)
INIT	0	1016	481.347									
	10.0	1026	490.810	2.400	3.00	3.00	417.	52.	50.	11.2	0.	68.
	20.0	1036	500.380	2.400	3.00	3.00	416.	52.	50.	12.2	0.	74.
	30.0	1046	509.910	2.400	3.00	3.00	414.	56.	50.	12.2	0.	102.
	40.0	1056	519.420	2.400	3.00	3.00	416.	58.	52.	13.0	0.	90.
	50.0	1106	528.930	2.400	3.00	3.00	418.	60.	54.	12.8	0.	94.
	60.0	1116	538.410	2.400	3.00	3.00	418.	60.	54.	13.0	0.	92.
	70.0	1126	547.940	2.400	3.00	3.00	419.	62.	54.	13.0	0.	84.
	80.0	1136	557.200	2.300	2.90	2.90	419.	64.	56.	12.0	0.	78.
	90.0	1146	566.620	2.400	3.00	3.00	419.	64.	56.	12.7	0.	80.
	100.0	1156	576.000	2.400	3.00	3.00	421.	65.	57.	13.0	0.	84.
	110.0	1206	585.560	2.400	3.10	3.10	421.	66.	58.	13.5	0.	74.
	120.0	1216	594.919	2.400	3.10	3.10	421.	66.	58.	14.5	0.	78.
TOTALS	120.0		113.572									
AVERAGE					3.01	3.01	418.	60.	54.	12.8	0.	83.

PARTICULATE FIELD DATA & RESULTS TABULATION

PLANT- NAME AND ADDRESS — TEST TEAM LEADER

PHILLIPS PETRO SWEENY — PHILLIPS

TEST 9CM58 FCC STACK

		ENGLISH UNITS	METRIC UNITS
TEST DATE		11/14/82	11/14/82
TB	TIME-START	1016	1016
TF	TIME-FINISH	1216	1216
TT	NET TIME OF TEST, MIN.	120.0	120.0
NP	NET SAMPLING POINTS	12	12
Y	METER CALIBRATION FACTOR	1.001	1.001
DN	SAMPLING NOZZLE DIAMETER	.224 IN	5.7 MM
CP	PITOT TUBE COEFFICIENT	.84	.84
PM	AVERAGE ORIFICE PRESSURE DROP	3.01 IN-H2O	76.4 MM-H2O
VM	VOLUME OF DRY GAS SAMPLED AT METER CONDITIONS	113.572 CU-FT	3.216 CU-M
TM	AVERAGE GAS METER TEMP	57.3 F	14.0 C
VMSTD	VOLUME OF DRY GAS SAMPLED AT STANDARD CONDITIONS*	118.535 SCF	3.357 SCM
VLC	TOTAL H2O COLLECTED IN IMPINGERS AND SILICA GEL,ML.	285.4	285.4
VWC	VOLUME OF WATER VAPOR AT STANDARD CONDITIONS*	13.434 SCF	.380 SCM
BWO	PERCENT MOISTURE BY VOLUME	10.18	10.18
FMD	MOLE FRACTION DRY GAS	.898	.898
PCO2	PERCENT CO2 BY VOL., DRY	12.20	12.20
PO2	PERCENT O2 BY VOL., DRY	4.60	4.60
PCO	PERCENT CO BY VOL., DRY	.00	.00
PN2	PERCENT N2 BY VOL., DRY	83.20	83.20
MD	MOLECULAR WT-DRY STACK GAS	30.14	30.14
MWS	MOLECULAR WT-STACK GAS	28.90	28.90

PB	BAROMETRIC PRESSURE	30.34	IN-HG	770.64	MM-HG
PSI	STATIC PRES OF STACK GAS	-1.38	IN-H2O	-35.05	MM-H2O
PS	STACK PRES, ABS.	30.24	IN-HG	768.06	MM-HG
TS	AVERAGE STACK TEMP	418.	F	215.	C
VS	AVG STACK GAS VELOCITY	111.3	FPS	33.9	MPS
AS	STACK AREA	9161.	SQ-IN	5.910	SQ-M
QSSTD	STACK FLOW RATE, DRY*	13914832.	SCFM	394026.	SCMM
QS	ACTUAL STACK FLOW RATE	25497008.	ACFM	721999.	ACMM
ISO	PERCENT ISOKINETIC	99.0		99.0	
MN	FILTERABLE-AMBIENT MG. EPA 5	63.2		63.2	
CS	FILTERABLE-AMBIENT	.0082	GR/DSCF*	18.831	MG/DSCM
MN	FILTERABLE-160 MG. EPA 5	53.6		53.6	
CS	FILTERABLE-160	.0070	GR/DSCF*	15.970	MG/DSCM
MN	FILTERABLE-232 MG. EPA 5	47.7		47.7	
CS	FILTERABLE-232	.0062	GR/DSCF*	14.212	MG/DSCM
MN	FILTERABLE-315 MG. EPA 5	44.5		44.5	
CS	FILTERABLE-315	.0058	GR/DSCF*	13.259	MG/DSCM

* 68 DEG F, 29.92 IN.HG.

EXAMPLE PARTICULATE CALCULATIONS TEST NO. 9CM5A

FCC STACK

VOLUME OF DRY GAS SAMPLED AT STANDARD CONDITIONS

VMSTD = (17.647 * VM * Y * (PB + PM / 13.6)) / (TM + 460.)

$$VMSTD = \frac{17.647 * 113.572 * 1.001 * (30.34 + 3.008 / 13.6)}{(57. + 460.)} = 118.535 \text{ DSCF}$$

VOLUME OF WATER VAPOR AT STANDARD CONDITIONS

VWC = .04707 * VLC

VWC = .04707 * 285. = 13.43 SCF

PERCENT MOISTURE IN STACK GAS

BWO = (100. * VWC) / (VMSTD + VWC)

$$BWO = \frac{100. * 13.43}{118.535 + 13.43} = 10.18 \text{ PERCENT}$$

MOLE FRACTION OF DRY STACK GAS

FMD = (100. - BWO) / 100.

$$FMD = \frac{100. - 10.2}{100.} = .898$$

AVERAGE MOLECULAR WEIGHT OF DRY STACK GAS

MD = (PCO2 * .44) + (PO2 * .32) + (PN2 + PCO) * .28

MD = (12.20*44/100) + (4.6*32/100) + ((83.2+ .0) * 28/100 = 30.14

MOLECULAR WEIGHT OF STACK GAS

MWS = MD * (1. - (BWO/100)) + 18. * (BWO/100)

MWS = 30.14* (1. -(10.18/100)) + 18. * (10.18/100) = 28.90

STACK GAS VELOCITY AT STACK CONDITIONS

DELP = SUM. OF THE SQRT(VH * (TS + 460.))

VS = 85.49 * CP * DELP / (SQRT(MWS * PS) * PNTS)

VS = 85.49 * .84 * 549.962 / (SQRT(28.90 * 30.24) * 12. = 111.33 FPS

STACK GAS VOLUMETRIC FLOW AT STACK CONDITIONS

QS = VS * AS * 3600/144

QS = 111.33 * 9161. 3600/144 = 25497008. ACFH

STACK GAS VOLUMETRIC FLOW AT STANDARD CONDITIONS

QSSTD = 17.647 * QS * PS * (1. - (BWO/100)) / (TS + 460.)

```
          17.647 *   25497008. *  30.24 * (1. - (10.18/100))
QSSTD = ------------------------------------------------------ =   13914832. SCFH
                    ( 418. + 460.)
```

PERCENT ISOKINETIC

ISO = (305.58*(TS+460.))*((0.002669*VLC)+(VM*Y*(PB+(PM/13.6))/(TM+460.)))/(TT*VS*PS*DN*DN)

```
       (305.58*( 418.+460.))*((0.002669*  285.)+(  113.572*1.001*( 30.34+(   3.008/13.6))/(  57.+460.)))
ISO = ------------------------------------------------------------------------------------------------------ =  99.02 PERCENT
                                  120. *    111.33 *   30.24 *  .224 *  .224
```

PARTICULATE LOADING -- EPA METHOD 5 (AT STANDARD CONDITIONS)

CS = 0.001 * MN * 15.43 / VMSTD

CS = 0.001 * 63.2 * 15.43 / 118.535 = .0082 GR/DSCF

FIELD DATA

PLANT	PHILLIPS PETRO SWEENY	DATE	11/14/82
SAMPLING LOCATION	FCC STACK	RUN NUMBER	9DM5B
SAMPLE TYPE	M5	PROBE LENGTH & TYPE	6 FT GLASS
OPERATOR	PHILLIPS	NOZZLE : I.D.	.226
AMBIENT TEMP.(DEG.F)	50.	ASSUMED MOISTURE	12.0
BAR.PRESS.(IN.HG)	30.34	SAMPLE BOX NUMBER	
STATIC PRESS.(IN.H2O)	-1.38	METER BOX NUMBER	FB2
FILTER NUMBER(S)	3450208	METER HEAD DIFF.	1.73
STACK INSIDE DIM.(IN)	108.00 .00		
PITOT TUBE COEFF.	.84	PROBE HEATER SETTING	320.
THERM. NO.		HEATER BOX SETTING	320.
LEAKAGE	.010 CFM @ 10.0 IN.HG		
METER CALIB. FACTOR	.986		

READ & RECORD DATA EVERY 10.0 MINUTES

TRAVERSE POINT NO.	SAMPLE TIME (MIN.)	CLOCK TIME (24-HR CLOCK)	GAS METER READING (CU.FT.)	VELOCITY HEAD (IN.H2O)	ORIFICE PRESSURE DIFFERENTIAL (IN.H2O) DESIRED	ORIFICE PRESSURE DIFFERENTIAL (IN.H2O) ACTUAL	STACK TEMP (DEG.F)	DRY GAS METER TEMP (DEG.F) INLET	DRY GAS METER TEMP (DEG.F) OUTLET	PUMP VACUUM (IN.HG)	SAMPLE BOX TEMP (DEG.F)	IMPINGER TEMP (DEG.F)
INIT	0	1018	430.548									
	10.0	1028	440.000	2.400	3.00	3.00	417.	54.	54.	7.2	0.	72.
	20.0	1038	449.270	2.400	3.00	3.00	416.	54.	54.	6.8	0.	76.
	30.0	1048	458.950	2.400	3.00	3.00	414.	54.	54.	7.8	0.	66.
	40.0	1058	468.570	2.400	3.00	3.00	416.	58.	52.	8.5	0.	110.
	50.0	1108	478.060	2.400	3.00	3.00	418.	58.	52.	8.0	0.	96.
	60.0	1118	487.490	2.400	3.00	3.00	418.	58.	52.	8.0	0.	86.
	70.0	1128	497.010	2.400	3.00	3.00	419.	59.	53.	8.2	0.	82.
	80.0	1138	506.230	2.300	2.90	2.90	419.	60.	56.	7.8	0.	78.
	90.0	1148	515.750	2.400	3.00	3.00	419.	61.	55.	8.0	0.	70.
	100.0	1158	525.410	2.400	3.00	3.00	421.	62.	56.	9.5	0.	74.
	110.0	1208	535.050	2.400	3.00	3.00	421.	64.	56.	9.5	0.	76.
	120.0	1218	544.773	2.400	3.00	3.00	421.	64.	56.	9.5	0.	78.
TOTALS	120.0		114.225									
AVERAGE					2.99	2.99	418.	59.	54.	8.2	0.	80.

PARTICULATE FIELD DATA & RESULTS TABULATION

PLANT- NAME AND ADDRESS — TEST TEAM LEADER

PHILLIPS PETRO SWEENY — PHILLIPS

TEST 9DM5B FCC STACK

		ENGLISH UNITS	METRIC UNITS
TEST DATE		11/14/82	11/14/82
TB	TIME-START	1018	1018
TF	TIME-FINISH	1218	1218
TT	NET TIME OF TEST, MIN.	120.0	120.0
NP	NET SAMPLING POINTS	12	12
Y	METER CALIBRATION FACTOR	.986	.986
DN	SAMPLING NOZZLE DIAMETER	.226 IN	5.7 MM
CP	PITOT TUBE COEFFICIENT	.84	.84
PM	AVERAGE ORIFICE PRESSURE DROP	2.99 IN-H2O	76.0 MM-H2O
VM	VOLUME OF DRY GAS SAMPLED AT METER CONDITIONS	114.225 CU-FT	3.234 CU-M
TM	AVERAGE GAS METER TEMP	56.5 F	13.6 C
VMSTD	VOLUME OF DRY GAS SAMPLED AT STANDARD CONDITIONS*	117.596 SCF	3.330 SCM
VLC	TOTAL H2O COLLECTED IN IMPINGERS AND SILICA GEL,ML.	243.5	243.5
VWC	VOLUME OF WATER VAPOR AT STANDARD CONDITIONS*	11.462 SCF	.325 SCM
BWO	PERCENT MOISTURE BY VOLUME	8.68	8.88
FMD	MOLE FRACTION DRY GAS	.911	.911
PCO2	PERCENT CO2 BY VOL., DRY	12.20	12.20
PO2	PERCENT O2 BY VOL., DRY	4.60	4.60
PCO	PERCENT CO BY VOL., DRY	.00	.00
PN2	PERCENT N2 BY VOL., DRY	83.20	83.20
MD	MOLECULAR WT-DRY STACK GAS	30.14	30.14
MWS	MOLECULAR WT-STACK GAS	29.06	29.06

PB	BAROMETRIC PRESSURE	30.34	IN-HG	770.64	MM-HG
PSI	STATIC PRES OF STACK GAS	-1.38	IN-H2O	-35.05	MM-H2O
PS	STACK PRES, ABS.	30.24	IN-HG	768.06	MM-HG
TS	AVERAGE STACK TEMP	418.	F	215.	C
VS	AVG STACK GAS VELOCITY	111.0	FPS	33.8	MPS
AS	STACK AREA	9161.	SQ-IN	5.910	SQ-M
QSSTD	STACK FLOW RATE, DRY*	14077672.	SCFH	398637.	SCMH
QS	ACTUAL STACK FLOW RATE	25427776.	ACFH	720038.	ACMH
ISO	PERCENT ISOKINETIC	95.4		95.4	
MN	FILTERABLE-AMBIENT MG. EPA 5	57.7		57.7	
CS	FILTERABLE-AMBIENT	.0076	GR/DSCF*	17.329	MG/DSCM
MN	FILTERABLE-160 MG. EPA 5	51.7		51.7	
CS	FILTERABLE-160	.0068	GR/DSCF*	15.527	MG/DSCM
MN	FILTERABLE-232 MG. EPA 5	48.6		48.6	
CS	FILTERABLE-232	.0064	GR/DSCF*	14.596	MG/DSCM
MN	FILTERABLE-315 MG. EPA 5	46.1		46.1	
CS	FILTERABLE-315	.0060	GR/DSCF*	13.845	MG/DSCM

* 68 DEG F, 29.92 IN.HG.

EXAMPLE PARTICULATE CALCULATIONS TEST NO. 9DM5B

FCC STACK

VOLUME OF DRY GAS SAMPLED AT STANDARD CONDITIONS

VMSTD = (17.647 * VM * Y * (PB + PM / 13.6)) / (TM + 460.)

$$VMSTD = \frac{17.647 * 114.225 * .986 * (30.34 + 2.992 / 13.6)}{(57. + 460.)} = 117.596 \text{ DSCF}$$

VOLUME OF WATER VAPOR AT STANDARD CONDITIONS

VWC = .04707 * VLC

VWC = .04707 * 244. = 11.46 SCF

PERCENT MOISTURE IN STACK GAS

BWO = (100. * VWC) / (VMSTD + VWC)

$$BWO = \frac{100. * 11.46}{117.596 + 11.46} = 8.88 \text{ PERCENT}$$

MOLE FRACTION OF DRY STACK GAS

FMD = (100. - BWO) / 100.

$$FMD = \frac{100. - 8.9}{100.} = .911$$

AVERAGE MOLECULAR WEIGHT OF DRY STACK GAS

MD = (PCO2 * .44) + (PO2 * .32) + (PN2 + PCO) * .28

MD = (12.20*44/100) + (4.6*32/100) + ((83.2+ .0) * 28/100 = 30.14

MOLECULAR WEIGHT OF STACK GAS

MWS = MD * (1. - (BWO/100)) + 18. * (BWO/100)

MWS = 30.14* (1. -(8.88/100)) + 18. * (8.88/100) = 29.06

STACK GAS VELOCITY AT STACK CONDITIONS

DELP = SUM. OF THE SQRT(VH * (TS + 460.))

VS = 85.49 * CP * DELP / (SQRT(MWS * PS) * PNTS)

VS = 85.49 * .84 * 549.962 / (SQRT(29.06 * 30.24) * 12. = 111.03 FPS

STACK GAS VOLUMETRIC FLOW AT STACK CONDITIONS

QS = VS * AS * 3600/144

QS = 111.03 * 9161. 3600/144 = 25427776. ACFH

STACK GAS VOLUMETRIC FLOW AT STANDARD CONDITIONS

QSSTD = 17.647 * QS * PS * (1. - (BWO/100)) / (TS + 460.)

$$QSSTD = \frac{17.647 * 25427776. * 30.24 * (1. - (8.88/100))}{(418. + 460.)} = 14077672. \text{ SCFH}$$

PERCENT ISOKINETIC

ISO = (305.58*(TS+460.))*((0.002669*VLC)+(VM*Y*(PB+(PM/13.6))/(TM+460.)))/(TT*VS*PS*DN*DN)

$$ISO = \frac{(305.58*(418.+460.))*((0.002669* 244.)+(114.225* .986*(30.34+(2.992/13.6))/(57.+460.)))}{120. * 111.03 * 30.24 * .226 * .226} = 95.39 \text{ PERCENT}$$

PARTICULATE LOADING -- EPA METHOD 5 (AT STANDARD CONDITIONS)

CS = 0.001 * MN * 15.43 / VMSTD

CS = 0.001 * 57.7 * 15.43 / 117.596 = .0076 GR/DSCF

FIELD DATA

PLANT	PHILLIPS SWEENY	DATE	11/15/82
SAMPLING LOCATION	FCC STACK	RUN NUMBER	10AM54
SAMPLE TYPE	M5-450	PROBE LENGTH & TYPE	6' GLASS
OPERATOR	DO	NOZZLE : I.D.	.219
AMBIENT TEMP.(DEG.F)	60.	ASSUMED MOISTURE	8.0
BAR.PRESS.(IN.HG)	30.27	SAMPLE BOX NUMBER	
STATIC PRESS.(IN.H2O)	-1.38	METER BOX NUMBER	FB3
FILTER NUMBER(S)	3450200	METER HEAD DIFF.	2.00
STACK INSIDE DIM.(IN)	108.00 .00		
PITOT TUBE COEFF.	.84	PROBE HEATER SETTING	450.
THERM. NO.		HEATER BOX SETTING	450.
LEAKAGE	.002 CFM @ 10.0 IN.HG		
METER CALIB. FACTOR	1.006		

READ & RECORD DATA EVERY 10.0 MINUTES

TRAVERSE POINT NO.	SAMPLE TIME (MIN.)	CLOCK TIME (24-HR CLOCK)	GAS METER READING (CU.FT.)	VELOCITY HEAD (IN.H2O)	ORIFICE PRESSURE DIFFERENTIAL (IN.H2O) DESIRED	ORIFICE PRESSURE DIFFERENTIAL (IN.H2O) ACTUAL	STACK TEMP (DEG.F)	DRY GAS METER TEMP (DEG.F) INLET	DRY GAS METER TEMP (DEG.F) OUTLET	PUMP VACUUM (IN.HG)	SAMPLE BOX TEMP (DEG.F)	IMPINGER TEMP (DEG.F)
INIT	0	1344	67.554									
	10.0	0	75.970	1.950	2.94	2.94	420.	73.	71.	7.2	0.	0.
	20.0	0	84.490	1.950	2.95	2.95	420.	77.	72.	8.8	0.	87.
	30.0	0	93.050	1.950	2.97	2.97	420.	82.	72.	8.8	0.	167.
	40.0	0	101.520	1.950	2.98	2.98	420.	85.	73.	8.2	0.	150.
	50.0	0	110.020	1.950	2.99	2.99	420.	87.	73.	8.3	0.	121.
	60.0	0	118.600	1.950	2.99	2.99	420.	87.	73.	8.7	0.	107.
	70.0	0	127.260	2.000	3.08	3.08	420.	87.	73.	8.8	0.	107.
	80.0	0	135.990	2.050	3.15	3.15	420.	87.	73.	9.2	0.	102.
	90.0	0	144.600	2.000	3.07	3.07	420.	87.	73.	9.1	0.	102.
	100.0	1524	153.105	1.950	2.99	2.99	420.	87.	73.	8.9	0.	111.
TOTALS	100.0		85.551									
AVERAGE					3.01	3.01	420.	84.	73.	8.6	0.	105.

PARTICULATE FIELD DATA & RESULTS TABULATION

PLANT- NAME AND ADDRESS — TEST TEAM LEADER

PHILLIPS SWEENY — DD

TEST 10AM54 FCC STACK

		ENGLISH UNITS	METRIC UNITS
TEST DATE		11/15/82	11/15/82
TB	TIME-START	1344	1344
TF	TIME-FINISH	1524	1524
TT	NET TIME OF TEST, MIN.	100.0	100.0
NP	NET SAMPLING POINTS	10	10
Y	METER CALIBRATION FACTOR	1.006	1.006
DN	SAMPLING NOZZLE DIAMETER	.219 IN	5.6 MM
CP	PITOT TUBE COEFFICIENT	.84	.84
PM	AVERAGE ORIFICE PRESSURE DROP	3.01 IN-H2O	76.5 MM-H2O
VM	VOLUME OF DRY GAS SAMPLED AT METER CONDITIONS	85.551 CU-FT	2.423 CU-M
TM	AVERAGE GAS METER TEMP	78.3 F	25.7 C
VMSTD	VOLUME OF DRY GAS SAMPLED AT STANDARD CONDITIONS*	86.037 SCF	2.436 SCM
VLC	TOTAL H2O COLLECTED IN IMPINGERS AND SILICA GEL,ML.	74.2	74.2
VWC	VOLUME OF WATER VAPOR AT STANDARD CONDITIONS*	3.493 SCF	.099 SCM
BWO	PERCENT MOISTURE BY VOLUME	3.90	3.90
FMD	MOLE FRACTION DRY GAS	.961	.961
PCO2	PERCENT CO2 BY VOL., DRY	14.60	14.60
PO2	PERCENT O2 BY VOL., DRY	4.20	4.20
PCO	PERCENT CO BY VOL., DRY	.00	.00
PN2	PERCENT N2 BY VOL., DRY	81.20	81.20
MD	MOLECULAR WT-DRY STACK GAS	30.50	30.50
MWS	MOLECULAR WT-STACK GAS	30.02	30.02

PB	BAROMETRIC PRESSURE	30.27	IN-HG	768.86	MM-HG
PSI	STATIC PRES OF STACK GAS	-1.38	IN-H2O	-35.05	MM-H2O
PS	STACK PRES, ABS.	30.17	IN-HG	766.28	MM-HG
TS	AVERAGE STACK TEMP	420.	F	216.	C
VS	AVG STACK GAS VELOCITY	99.4	FPS	30.3	MPS
AS	STACK AREA	9161.	SQ-IN	5.910	SQ-M
QSSTD	STACK FLOW RATE, DRY*	13229304.	SCFH	374614.	SCMH
QS	ACTUAL STACK FLOW RATE	22754948.	ACFH	644352.	ACMH
ISO	PERCENT ISOKINETIC	94.9		94.9	
MN	FILTERABLE-AMBIENT MG. EPA 5	45.1		45.1	
CS	FILTERABLE-AMBIENT	.0081	GR/DSCF*	18.513	MG/DSCM
MN	FILTERABLE-232 MG. EPA 5	32.5		32.5	
CS	FILTERABLE-232	.0058	GR/DSCF*	13.341	MG/DSCM
MN	FILTERABLE-315 MG. EPA 5	30.4		30.4	
CS	FILTERABLE-315	.0055	GR/DSCF*	12.479	MG/DSCM

* 68 DEG F, 29.92 IN.HG.

EXAMPLE PARTICULATE CALCULATIONS TEST NO.10A-54

FCC STACK

VOLUME OF DRY GAS SAMPLED AT STANDARD CONDITIONS

VMSTD = (17.647 * VM * Y * (PB + PM / 13.6)) / (TM + 460.)

$$VMSTD = \frac{17.647 * 85.551 * 1.006 * (30.27 + 3.011 / 13.6)}{(78. + 460.)} = 86.037 \text{ DSCF}$$

VOLUME OF WATER VAPOR AT STANDARD CONDITIONS

VWC = .04707 * VLC

VWC = .04707 * 74. = 3.49 SCF

PERCENT MOISTURE IN STACK GAS

BWO = (100. * VWC) / (VMSTD + VWC)

$$BWO = \frac{100. * 3.49}{86.037 + 3.49} = 3.90 \text{ PERCENT}$$

MOLE FRACTION OF DRY STACK GAS

FMD = (100. - BWO) / 100.

$$FMD = \frac{100. - 3.9}{100.} = .961$$

AVERAGE MOLECULAR WEIGHT OF DRY STACK GAS

MD = (PCO2 * .44) + (PO2 * .32) + (PN2 + PCO) * .28

MD = (14.60*44/100) + (4.2*32/100) + ((81.2+ .0) * 28/100 = 30.50

MOLECULAR WEIGHT OF STACK GAS

MWS = MD * (1. - (BWO/100)) + 18. * (BWO/100)

MWS = 30.50* (1. -(3.90/100)) + 18. * (3.90/100) = 30.02

STACK GAS VELOCITY AT STACK CONDITIONS

DELP = SUM. OF THE SQRT(VH * (TS + 460.))

VS = 85.49 * CP * DELP / (SQRT(MWS * PS) * PNTS)

VS = 85.49 * .84 * 416.351 / (SQRT(30.02 * 30.17) * 10. = 99.36 FPS

STACK GAS VOLUMETRIC FLOW AT STACK CONDITIONS

QS = VS * AS * 3600/144

QS = 99.36 * 9161. 3600/144 = 22754948. ACFM

STACK GAS VOLUMETRIC FLOW AT STANDARD CONDITIONS

QSSTD = 17.647 * QS * PS * (1. - (BWO/100)) / (TS + 460.)

$$QSSTD = \frac{17.647 * 22754948. * 30.17 * (1. - (3.90/100))}{(420. + 460.)} = 13229304. \text{ SCFM}$$

PERCENT ISOKINETIC

ISO = (305.58*(TS+460.))*((0.002669*VLC)+(VM*Y*(PB+(PM/13.6))/(TM+460.)))/(TT*VS*PS*DN*DN)

$$ISO = \frac{(305.58*(420.+460.))*((0.002669*74.)+(85.551*1.006*(30.27+(3.011/13.6))/(78.+460.)))}{100. * 99.36 * 30.17 * .219 * .219} = 94.90 \text{ PERCENT}$$

PARTICULATE LOADING -- EPA METHOD 5 (AT STANDARD CONDITIONS)

CS = 0.001 * MN * 15.43 / VMSTD

CS = 0.001 * 45.1 * 15.43 / 86.037 = .0081 GR/DSCF

FIELD DATA

PLANT	PHILLIPS SWEENY	DATE	11/15/82
SAMPLING LOCATION	FCC STACK	RUN NUMBER	10BM54
SAMPLE TYPE	M5-450	PROBE LENGTH & TYPE	6' GLASS
OPERATOR	DO	NOZZLE : I.D.	.223
AMBIENT TEMP.(DEG.F)	60.	ASSUMED MOISTURE	8.0
BAR.PRESS.(IN.HG)	30.27	SAMPLE BOX NUMBER	
STATIC PRESS.(IN.H2O)	-1.38	METER BOX NUMBER	F85
FILTER NUMBER(S)	3450199	METER HEAD DIFF.	1.95
STACK INSIDE DIM.(IN)	108.00 .00		
PITOT TUBE COEFF.	.84	PROBE HEATER SETTING	450.
THERM. NO.		HEATER BOX SETTING	450.
LEAKAGE	.020 CFM @ 11.5 IN.HG		
METER CALIB. FACTOR	.988		

READ & RECORD DATA EVERY 10.0 MINUTES

TRAVERSE POINT NO.	SAMPLE TIME (MIN.)	CLOCK TIME (24-HR CLOCK)	GAS METER READING (CU.FT.)	VELOCITY HEAD (IN.H2O)	ORIFICE PRESSURE DIFFERENTIAL (IN.H2O) DESIRED	ACTUAL	STACK TEMP (DEG.F)	DRY GAS METER TEMP (DEG.F) INLET	OUTLET	PUMP VACUUM (IN.HG)	SAMPLE BOX TEMP (DEG.F)	IMPINGER TEMP (DEG.F)
INIT	0	1345	751.065									
	10.0	0	759.910	1.950	2.94	2.94	420.	74.	73.	9.1	0.	0.
	20.0	0	768.820	1.950	2.95	2.95	420.	80.	74.	9.8	0.	78.
	30.0	0	777.760	1.950	2.97	2.97	420.	82.	76.	10.4	0.	125.
	40.0	0	786.600	1.950	2.98	2.98	420.	87.	79.	10.2	0.	110.
	50.0	0	795.690	1.950	2.99	2.99	420.	90.	80.	10.2	0.	99.
	60.0	0	804.640	1.950	2.99	2.99	420.	92.	81.	10.1	0.	87.
	70.0	0	813.710	2.000	3.08	3.08	420.	93.	81.	10.2	0.	77.
	80.0	0	822.790	2.050	3.15	3.15	420.	93.	81.	10.3	0.	74.
	90.0	0	831.680	2.000	3.07	3.07	420.	93.	81.	10.3	0.	75.
	100.0	1524	840.632	1.950	2.99	2.99	420.	93.	81.	10.9	0.	80.
TOTALS	100.0		89.567									
AVERAGE					3.01	3.01	420.	88.	79.	10.2	0.	81.

PARTICULATE FIELD DATA & RESULTS TABULATION

PLANT- NAME AND ADDRESS — TEST TEAM LEADER

PHILLIPS SWEENY — DO

TEST 108M54 FCC STACK

		ENGLISH UNITS	METRIC UNITS
TEST DATE		11/15/82	11/15/82
TB	TIME-START	1345	1345
TF	TIME-FINISH	1524	1524
TT	NET TIME OF TEST, MIN.	100.0	100.0
NP	NET SAMPLING POINTS	10	10
Y	METER CALIBRATION FACTOR	.988	.988
DN	SAMPLING NOZZLE DIAMETER	.223 IN	5.7 MM
CP	PITOT TUBE COEFFICIENT	.84	.84
PM	AVERAGE ORIFICE PRESSURE DROP	3.01 IN-H2O	76.5 MM-H2O
VM	VOLUME OF DRY GAS SAMPLED AT METER CONDITIONS	89.567 CU-FT	2.536 CU-M
TM	AVERAGE GAS METER TEMP	83.2 F	28.4 C
VMSTD	VOLUME OF DRY GAS SAMPLED AT STANDARD CONDITIONS*	87.658 SCF	2.482 SCM
VLC	TOTAL H2O COLLECTED IN IMPINGERS AND SILICA GEL,ML.	122.0	122.0
VWC	VOLUME OF WATER VAPOR AT STANDARD CONDITIONS*	5.743 SCF	.163 SCM
BWO	PERCENT MOISTURE BY VOLUME	6.15	6.15
FMD	MOLE FRACTION DRY GAS	.939	.939
PCO2	PERCENT CO2 BY VOL., DRY	14.60	14.60
PO2	PERCENT O2 BY VOL., DRY	4.20	4.20
PCO	PERCENT CO BY VOL., DRY	.00	.00
PN2	PERCENT N2 BY VOL., DRY	81.20	81.20
MD	MOLECULAR WT-DRY STACK GAS	30.50	30.50
MWS	MOLECULAR WT-STACK GAS	29.74	29.74

PB	BAROMETRIC PRESSURE	30.27	IN-HG	768.86	MM-HG
PSI	STATIC PRES OF STACK GAS	-1.38	IN-H2O	-35.05	MM-H2O
PS	STACK PRES, ABS.	30.17	IN-HG	766.28	MM-HG
TS	AVERAGE STACK TEMP	420.	F	216.	C
VS	AVG STACK GAS VELOCITY	99.8	FPS	30.4	MPS
AS	STACK AREA	9161.	SQ-IN	5.910	SQ-M
QSSTD	STACK FLOW RATE, DRY*	12980842.	SCFH	367579.	SCMH
QS	ACTUAL STACK FLOW RATE	22862208.	ACFH	647389.	ACMH
ISO	PERCENT ISOKINETIC	95.0		95.0	
MN	FILTERABLE-AMBIENT MG. EPA 5	44.8		44.8	
CS	FILTERABLE-AMBIENT	.0079	GR/DSCF*	18.050	MG/DSCM
MN	FILTERABLE-315 MG. EPA 5	30.4		30.4	
CS	FILTERABLE-315	.0054	GR/DSCF*	12.248	MG/DSCM

* 68 DEG F, 29.92 IN.HG.

EXAMPLE PARTICULATE CALCULATIONS TEST NO.108M54

FCC STACK

VOLUME OF DRY GAS SAMPLED AT STANDARD CONDITIONS

VMSTD = (17.647 * VM * Y * (PB + PM / 13.6)) / (TM + 460.)

$$VMSTD = \frac{17.647 * 89.567 * .988 * (30.27 + 3.011 / 13.6)}{(83. + 460.)} = 87.658 \text{ DSCF}$$

VOLUME OF WATER VAPOR AT STANDARD CONDITIONS

VWC = .04707 * VLC

VWC = .04707 * 122. = 5.74 SCF

PERCENT MOISTURE IN STACK GAS

BWO = (100. * VWC) / (VMSTD + VWC)

$$BWO = \frac{100. * 5.74}{87.658 + 5.74} = 6.15 \text{ PERCENT}$$

MOLE FRACTION OF DRY STACK GAS

FMD = (100. - BWO) / 100.

$$FMD = \frac{100. - 6.1}{100.} = .939$$

AVERAGE MOLECULAR WEIGHT OF DRY STACK GAS

MD = (PCO2 * .44) + (PO2 * .32) + (PN2 + PCO) * .28

MD = (14.60*44/100) + (4.2*32/100) + ((81.2+ .0) * 28/100 = 30.50

MOLECULAR WEIGHT OF STACK GAS

MWS = MD * (1. - (BWO/100)) + 18. * (BWO/100)

MWS = 30.50* (1. -(6.15/100)) + 18. * (6.15/100) = 29.74

STACK GAS VELOCITY AT STACK CONDITIONS

DELP = SUM. OF THE SQRT(VH * (TS + 460.))

VS = 85.49 * CP * DELP / (SQRT(MWS * PS) * PNTS)

VS = 85.49 * .84 * 416.351 / (SQRT(29.74 * 30.17) * 10. = 99.83 FPS

STACK GAS VOLUMETRIC FLOW AT STACK CONDITIONS

QS = VS * AS * 3600/144

QS = 99.83 * 9161. 3600/144 = 22862208. ACFM

STACK GAS VOLUMETRIC FLOW AT STANDARD CONDITIONS

QSSTD = 17.647 * QS * PS * (1. - (BWO/100)) / (TS + 460.)

$$QSSTD = \frac{17.647 * 22862208. * 30.17 * (1. - (6.15/100))}{(420. + 460.)} = 12980842. \text{ SCFM}$$

PERCENT ISOKINETIC

ISO = (305.58*(TS+460.))*((0.002669*VLC)+(VM*Y*(PB+(PM/13.6))/(TM+460.)))/(TT*VS*PS*DN*DN)

$$ISO = \frac{(305.58*(420.+460.))*((0.002669*122.)+(89.567*.988*(30.27+(3.011/13.6))/(83.+460.)))}{100. * 99.83 * 30.17 * .223 * .223} = 95.04 \text{ PERCENT}$$

PARTICULATE LOADING -- EPA METHOD 5 (AT STANDARD CONDITIONS)

CS = 0.001 * MN * 15.43 / VMSTD

CS = 0.001 * 44.8 * 15.43 / 87.658 = .0079 GR/DSCF

FIELD DATA

PLANT	PHILLIPS PETRO SWEENY	DATE	11/14/82
SAMPLING LOCATION	FCC STACK	RUN NUMBER	10CM58
SAMPLE TYPE	M5	PROBE LENGTH & TYPE	6 FT GLASS
OPERATOR	PHILLIPS	NOZZLE : I.D.	.224
AMBIENT TEMP.(DEG.F)	63.	ASSUMED MOISTURE	12.0
BAR.PRESS.(IN.HG)	30.34	SAMPLE BOX NUMBER	
STATIC PRESS.(IN.H2O)	-1.38	METER BOX NUMBER	FB7
FILTER NUMBER(S)		METER HEAD DIFF.	1.71
STACK INSIDE DIM.(IN)	108.00 .00		
PITOT TUBE COEFF.	.84	PROBE HEATER SETTING	320.
THERM. NO.		HEATER BOX SETTING	320.
LEAKAGE	.005 CFM @ 7.5 IN.HG		
METER CALIB. FACTOR	1.001		

READ & RECORD DATA EVERY 10.0 MINUTES

TRAVERSE POINT NO.	SAMPLE TIME (MIN.)	CLOCK TIME (24-HR CLOCK)	GAS METER READING (CU.FT.)	VELOCITY HEAD (IN.H2O)	ORIFICE PRESSURE DIFFERENTIAL (IN.H2O) DESIRED	ORIFICE PRESSURE DIFFERENTIAL (IN.H2O) ACTUAL	STACK TEMP (DEG.F)	DRY GAS METER TEMP (DEG.F) INLET	DRY GAS METER TEMP (DEG.F) OUTLET	PUMP VACUUM (IN.HG)	SAMPLE BOX TEMP (DEG.F)	IMPINGER TEMP (DEG.F)
INIT	0	1345	595.168									
	10.0	1355	604.610	2.400	3.00	3.00	424.	61.	59.	6.2	0.	76.
	20.0	1405	613.920	2.300	2.90	2.90	425.	60.	58.	6.5	0.	112.
	30.0	1415	623.230	2.300	2.90	2.90	424.	66.	59.	6.2	0.	120.
	40.0	1425	632.500	2.300	2.90	2.90	423.	66.	59.	6.0	0.	96.
	50.0	1435	641.840	2.300	2.90	2.90	423.	68.	60.	6.0	0.	94.
	60.0	1445	651.120	2.300	2.90	2.90	424.	70.	60.	6.0	0.	78.
	70.0	1455	660.340	2.300	2.90	2.90	424.	71.	61.	6.1	0.	80.
	80.0	1505	669.620	2.300	2.90	2.90	425.	71.	61.	6.3	0.	81.
	90.0	1515	678.940	2.300	2.90	2.90	425.	71.	61.	6.5	0.	78.
	100.0	1525	688.090	2.300	2.90	2.90	425.	71.	62.	6.8	0.	88.
TOTALS	100.0		92.922									
AVERAGE					2.91	2.91	424.	68.	60.	6.3	0.	90.

PARTICULATE FIELD DATA & RESULTS TABULATION

PLANT- NAME AND ADDRESS — TEST TEAM LEADER

PHILLIPS PETRO SWEENY — PHILLIPS

TEST 10CM5B FCC STACK

		ENGLISH UNITS	METRIC UNITS
TEST DATE		11/14/82	11/14/82
TB	TIME-START	1345	1345
TF	TIME-FINISH	1525	1525
TT	NET TIME OF TEST, MIN.	100.0	100.0
NP	NET SAMPLING POINTS	10	10
Y	METER CALIBRATION FACTOR	1.001	1.001
DN	SAMPLING NOZZLE DIAMETER	.224 IN	5.7 MM
CP	PITOT TUBE COEFFICIENT	.84	.84
PM	AVERAGE ORIFICE PRESSURE DROP	2.91 IN-H20	73.9 MM-H20
VM	VOLUME OF DRY GAS SAMPLED AT METER CONDITIONS	92.922 CU-FT	2.631 CU-M
TM	AVERAGE GAS METER TEMP	63.8 F	17.6 C
VMSTD	VOLUME OF DRY GAS SAMPLED AT STANDARD CONDITIONS*	95.756 SCF	2.712 SCM
VLC	TOTAL H20 COLLECTED IN IMPINGERS AND SILICA GEL,ML.	253.5	253.5
VWC	VOLUME OF WATER VAPOR AT STANDARD CONDITIONS*	11.932 SCF	.338 SCM
BWO	PERCENT MOISTURE BY VOLUME	11.08	11.08
FMD	MOLE FRACTION DRY GAS	.889	.889
PCO2	PERCENT CO2 BY VOL., DRY	14.60	14.60
PO2	PERCENT O2 BY VOL., DRY	4.20	4.20
PCO	PERCENT CO BY VOL., DRY	.00	.00
PN2	PERCENT N2 BY VOL., DRY	81.20	81.20
MD	MOLECULAR WT-DRY STACK GAS	30.50	30.50
MWS	MOLECULAR WT-STACK GAS	29.12	29.12

PB	BAROMETRIC PRESSURE	30.34	IN-HG	770.64	MM-HG
PSI	STATIC PRES OF STACK GAS	-1.38	IN-H2O	-35.05	MM-H2O
PS	STACK PRES, ABS.	30.24	IN-HG	768.06	MM-HG
TS	AVERAGE STACK TEMP	424.	F	218.	C
VS	AVG STACK GAS VELOCITY	109.4	FPS	33.3	MPS
AS	STACK AREA	9161.	SQ-IN	5.910	SQ-M
QSSTD	STACK FLOW RATE, DRY*	13441808.	SCFH	380632.	SCMH
QS	ACTUAL STACK FLOW RATE	25048336.	ACFH	709294.	ACMH
ISO	PERCENT ISOKINETIC	99.4		99.4	
MN	FILTERABLE-AMBIENT MG. EPA 5	48.7		48.7	
CS	FILTERABLE-AMBIENT	.0078	GR/DSCF*	17.962	MG/DSCM
MN	FILTERABLE-160 MG. EPA 5	38.4		38.4	
CS	FILTERABLE-160	.0062	GR/DSCF*	14.163	MG/DSCM
MN	FILTERABLE-232 MG. EPA 5	34.1		34.1	
CS	FILTERABLE-232	.0055	GR/DSCF*	12.577	MG/DSCM
MN	FILTERABLE-315 MG. EPA 5	31.6		31.6	
CS	FILTERABLE-315	.0051	GR/DSCF*	11.655	MG/DSCM

* 68 DEG F, 29.92 IN.HG.

EXAMPLE PARTICULATE CALCULATIONS TEST NO.10CM58

FCC STACK

VOLUME OF DRY GAS SAMPLED AT STANDARD CONDITIONS

VMSTD = (17.647 * VM * Y * (PB + PM / 13.6)) / (TM + 460.)

$$VMSTD = \frac{17.647 * 92.922 * 1.001 * (30.34 + 2.910 / 13.6)}{(64. + 460.)} = 95.756 \text{ DSCF}$$

VOLUME OF WATER VAPOR AT STANDARD CONDITIONS

VWC = .04707 * VLC

VWC = .04707 * 253. = 11.93 SCF

PERCENT MOISTURE IN STACK GAS

BWO = (100. * VWC) / (VMSTD + VWC)

$$BWO = \frac{100. * 11.93}{95.756 + 11.93} = 11.08 \text{ PERCENT}$$

MOLE FRACTION OF DRY STACK GAS

FMD = (100. - BWO) / 100.

$$FMD = \frac{100. - 11.1}{100.} = .889$$

AVERAGE MOLECULAR WEIGHT OF DRY STACK GAS

MD = (PCO2 * .44) + (PO2 * .32) + (PN2 + PCO) * .28

MD = (14.60*44/100) + (4.2*32/100) + ((81.2+ .0) * 28/100 = 30.50

MOLECULAR WEIGHT OF STACK GAS

MWS = MD * (1. - (BWO/100)) + 18. * (BWO/100)

MWS = 30.50* (1. -(11.08/100)) + 18. * (11.08/100) = 29.12

STACK GAS VELOCITY AT STACK CONDITIONS

DELP = SUM. OF THE SQRT(VH * (TS + 460.))

VS = 85.49 * CP * DELP / (SQRT(MWS * PS) * PNTS)

VS = 85.49 * .84 * 451.931 / (SQRT(29.12 * 30.24) * 10. = 109.37 FPS

STACK GAS VOLUMETRIC FLOW AT STACK CONDITIONS

QS = VS * AS * 3600/144

QS = 109.37 * 9161. 3600/144 = 25048336. ACFH

STACK GAS VOLUMETRIC FLOW AT STANDARD CONDITIONS

QSSTD = 17.647 * QS * PS * (1. - (BWO/100)) / (TS + 460.)

$$QSSTD = \frac{17.647 * 25048336. * 30.24 * (1. - (11.08/100))}{(424. + 460.)} = 13441808. \text{ SCFH}$$

PERCENT ISOKINETIC

ISO = (305.58*(TS+460.))*((0.002669*VLC)+(VM*Y*(PB+(PM/13.6))/(TM+460.)))/(TT*VS*PS*DN*DN)

$$ISO = \frac{(305.58*(424.+460.))*((0.002669* 253.)+(92.922*1.001*(30.34+(2.910/13.6))/(64.+460.)))}{100. * 109.37 * 30.24 * .224 * .224} = 99.37 \text{ PERCENT}$$

PARTICULATE LOADING -- EPA METHOD 5 (AT STANDARD CONDITIONS)

CS = 0.001 * MN * 15.43 / VMSTD

CS = 0.001 * 48.7 * 15.43 / 95.756 = .0078 GR/DSCF

FIELD DATA

PLANT	PHILLIPS PETRO SWEENY	DATE	11/14/82
SAMPLING LOCATION	FCC OUTLET	RUN NUMBER	10DM5B
SAMPLE TYPE	M5	PROBE LENGTH & TYPE	6 FT GLASS
OPERATOR	PHILLIPS	NOZZLE : I.D.	.227
AMBIENT TEMP.(DEG.F)	63.	ASSUMED MOISTURE	12.0
BAR.PRESS.(IN.HG)	30.34	SAMPLE BOX NUMBER	
STATIC PRESS.(IN.H2O)	-1.38	METER BOX NUMBER	FB2
FILTER NUMBER(S)		METER HEAD DIFF.	1.73
STACK INSIDE DIM.(IN)	108.00 .00		
PITOT TUBE COEFF.	.84	PROBE HEATER SETTING	320.
THERM. NO.		HEATER BOX SETTING	320.
LEAKAGE	.005 CFM @ 10.0 IN.HG		
METER CALIB. FACTOR	.986		

READ & RECORD DATA EVERY 10.0 MINUTES

TRAVERSE POINT NO.	SAMPLE TIME (MIN.)	CLOCK TIME (24-HR CLOCK)	GAS METER READING (CU.FT.)	VELOCITY HEAD (IN.H2O)	ORIFICE PRESSURE DIFFERENTIAL (IN.H2O) DESIRED	ACTUAL	STACK TEMP (DEG.F)	DRY GAS METER TEMP (DEG.F) INLET	OUTLET	PUMP VACUUM (IN.HG)	SAMPLE BOX TEMP (DEG.F)	IMPINGER TEMP (DEG.F)
INIT	0	1346	544.907									
	10.0	1356	554.590	2.400	3.00	3.00	424.	54.	54.	8.8	0.	76.
	20.0	1406	564.020	2.300	2.90	2.90	425.	59.	55.	9.2	0.	76.
	30.0	1416	573.370	2.300	2.90	2.90	424.	60.	54.	8.5	0.	104.
	40.0	1426	582.880	2.300	2.90	2.90	423.	64.	56.	8.5	0.	102.
	50.0	1436	592.310	2.300	2.90	2.90	423.	64.	56.	8.2	0.	92.
	60.0	1446	601.670	2.300	2.90	2.90	424.	64.	56.	8.2	0.	84.
	70.0	1456	611.000	2.300	2.90	2.90	424.	66.	56.	8.2	0.	78.
	80.0	1506	620.300	2.300	2.90	2.90	425.	66.	56.	8.2	0.	72.
	90.0	1516	629.510	2.300	2.90	2.90	425.	66.	56.	8.2	0.	72.
	100.0	1526	638.707	2.300	2.90	2.90	425.	66.	56.	8.5	0.	74.
TOTALS	100.0		93.800									
AVERAGE					2.91	2.91	424.	63.	56.	8.5	0.	83.

PARTICULATE FIELD DATA & RESULTS TABULATION

PLANT- NAME AND ADDRESS — TEST TEAM LEADER

PHILLIPS PETRO SWEENY — PHILLIPS

TEST 10DM5B FCC OUTLET

		ENGLISH UNITS	METRIC UNITS
TEST DATE		11/14/82	11/14/82
TB	TIME-START	1346	1346
TF	TIME-FINISH	1526	1526
TT	NET TIME OF TEST, MIN.	100.0	100.0
NP	NET SAMPLING POINTS	10	10
Y	METER CALIBRATION FACTOR	.986	.986
DN	SAMPLING NOZZLE DIAMETER	.227 IN	5.8 MM
CP	PITOT TUBE COEFFICIENT	.84	.84
PM	AVERAGE ORIFICE PRESSURE DROP	2.91 IN-H2O	73.9 MM-H2O
VM	VOLUME OF DRY GAS SAMPLED AT METER CONDITIONS	93.800 CU-FT	2.656 CU-M
TM	AVERAGE GAS METER TEMP	59.2 F	15.1 C
VMSTD	VOLUME OF DRY GAS SAMPLED AT STANDARD CONDITIONS*	96.047 SCF	2.720 SCM
VLC	TOTAL H2O COLLECTED IN IMPINGERS AND SILICA GEL,ML.	257.7	257.7
VWC	VOLUME OF WATER VAPOR AT STANDARD CONDITIONS*	12.130 SCF	.343 SCM
BWO	PERCENT MOISTURE BY VOLUME	11.21	11.21
FMD	MOLE FRACTION DRY GAS	.888	.888
PCO2	PERCENT CO2 BY VOL., DRY	14.60	14.60
PO2	PERCENT O2 BY VOL., DRY	4.20	4.20
PCO	PERCENT CO BY VOL., DRY	.00	.00
PN2	PERCENT N2 BY VOL., DRY	81.20	81.20
MD	MOLECULAR WT-DRY STACK GAS	30.50	30.50
MWS	MOLECULAR WT-STACK GAS	29.10	29.10

PB	BAROMETRIC PRESSURE	30.34	IN-HG	770.64	MM-HG
PSI	STATIC PRES OF STACK GAS	-1.38	IN-H2O	-35.05	MM-H2O
PS	STACK PRES, ABS.	30.24	IN-HG	768.06	MM-HG
TS	AVERAGE STACK TEMP	424.	F	218.	C
VS	AVG STACK GAS VELOCITY	109.4	FPS	33.3	MPS
AS	STACK AREA	9161.	SQ-IN	5.910	SQ-M
QSSTD	STACK FLOW RATE, DRY*	13425574.	SCFH	380172.	SCMH
QS	ACTUAL STACK FLOW RATE	25055480.	ACFH	709496.	ACMH
ISO	PERCENT ISOKINETIC	97.2		97.2	
MN	FILTERABLE-AMBIENT MG. EPA 5	78.4		78.4	
CS	FILTERABLE-AMBIENT	.0126	GR/DSCF*	28.829	MG/DSCM
MN	FILTERABLE-160 MG. EPA 5	52.6		52.6	
CS	FILTERABLE-160	.0085	GR/DSCF*	19.342	MG/DSCM
MN	FILTERABLE-232 MG. EPA 5	46.2		46.2	
CS	FILTERABLE-232	.0074	GR/DSCF*	16.988	MG/DSCM
MN	FILTERABLE-315 MG. EPA 5	40.8		40.8	
CS	FILTERABLE-315	.0066	GR/DSCF*	15.003	MG/DSCM

* 68 DEG F, 29.92 IN.HG.

EXAMPLE PARTICULATE CALCULATIONS TEST NO.10DM5B

FCC OUTLET

VOLUME OF DRY GAS SAMPLED AT STANDARD CONDITIONS

VMSTD = (17.647 * VM * Y * (PB + PM / 13.6)) / (TM + 460.)

$$VMSTD = \frac{17.647 * 93.800 * .986 * (30.34 + 2.910 / 13.6)}{(59. + 460.)} = 96.047 \text{ DSCF}$$

VOLUME OF WATER VAPOR AT STANDARD CONDITIONS

VWC = .04707 * VLC

VWC = .04707 * 258. = 12.13 SCF

PERCENT MOISTURE IN STACK GAS

BWO = (100. * VWC) / (VMSTD + VWC)

$$BWO = \frac{100. * 12.13}{96.047 + 12.13} = 11.21 \text{ PERCENT}$$

MOLE FRACTION OF DRY STACK GAS

FMD = (100. - BWO) / 100.

$$FMD = \frac{100. - 11.2}{100.} = .888$$

AVERAGE MOLECULAR WEIGHT OF DRY STACK GAS

MD = (PCO2 * .44) + (PO2 * .32) + (PN2 + PCO) * .28

MD = (14.60*44/100) + (4.2*32/100) + ((81.2+ .0) * 28/100 = 30.50

MOLECULAR WEIGHT OF STACK GAS

MWS = MD * (1. - (BWO/100)) + 18. * (BWO/100)

MWS = 30.50* (1. -(11.21/100)) + 18. * (11.21/100) = 29.10

STACK GAS VELOCITY AT STACK CONDITIONS

DELP = SUM. OF THE SQRT(VH * (TS + 460.))

VS = 85.49 * CP * DELP / (SQRT(MWS * PS) * PNTS)

VS = 85.49 * .84 * 451.931 / (SQRT(29.10 * 30.24) * 10. = 109.40 FPS

STACK GAS VOLUMETRIC FLOW AT STACK CONDITIONS

QS = VS * AS * 3600/144

QS = 109.40 * 9161. 3600/144 = 25055480. ACFM

STACK GAS VOLUMETRIC FLOW AT STANDARD CONDITIONS

QSSTD = 17.647 * QS * PS * (1. - (BWO/100)) / (TS + 460.)

$$QSSTD = \frac{17.647 * 25055480. * 30.24 * (1. - (11.21/100))}{(424. + 460.)} = 13425574. \text{ SCFM}$$

PERCENT ISOKINETIC

ISO = (305.58*(TS+460.))*((0.002669*VLC)+(VM*Y*(PB+(PM/13.6))/(TM+460.)))/(TT*VS*PS*DN*DN)

$$ISO = \frac{(305.58*(424.+460.))*((0.002669* 258.)+(93.800* .986*(30.34+(2.910/13.6))/(59.+460.)))}{100. * 109.40 * 30.24 * .227 * .227} = 97.17 \text{ PERCENT}$$

PARTICULATE LOADING -- EPA METHOD 5 (AT STANDARD CONDITIONS)

CS = 0.001 * MN * 15.43 / VMSTD

CS = 0.001 * 78.4 * 15.43 / 96.047 = .0126 GR/DSCF

APPENDIX B

FIELD DATA

TRAVERSE POINT LOCATION FOR CIRCULAR DUCTS

Plant Phillips - Sweeny

Date 11/5/82

Sampling location FCC Stack

Inside of far wall to outside of nipple 9' 11"

Inside of near wall to outside of nipple (nipple length) 11"

Stack I.D. 9'

Nearest upstream disturbance 98 dd

Nearest downstream disturbance 68 dd

Calculated by DRO

SCHEMATIC OF SAMPLING LOCATION

TRAVERSE POINT NUMBER	FRACTION OF STACK I.D.	STACK I.D.	PRODUCT OF COLUMNS 2 AND 3 (TO NEAREST 1/8 INCH)	NIPPLE LENGTH	TRAVERSE POINT LOCATION FROM OUTSIDE OF NIPPLE (SUM OF COLUMNS 4 & 5)
1	.044	108		11	15¾
2	.146				26¾
3	.296				43
					~~55~~
center					65

GAS VELOCITY AND VOLUME DATA

	PLANT AND CITY	RUN DATE
1.	Phillips - Sweeny	11 15 82

SAMPLING LOCATION	CLOCK TIME
FCC Stack	1405

	RUN NUMBER	OPERATOR	AMB. TEMP. (°F)	BAR. PRESS (in. Hg)	STATIC PRESS (in. H_2O)
2.	V-1	DO/RA	70	30.16	-1.4

MOLECULAR WT.	STACK INSIDE DIMENSION (in.)		PITOT TUBE Cp	MOISTURE %
	DIAM OR SIDE 1	SIDE 2		
30 assumed	108		.84	14.0 assumed

FIELD DATA

TRAVERSE POINT NUMBER	POSITION (in.)	VELOCITY HEAD (Δp_s), in. H_2O	STACK TEMP, °F
7,8,9,10	11,12,13,14	25,26,27,28,29	38,39,40,41
D-1		1.5	422
2		1.5	422
3		1.55	422
center		1.55	422
A-1		1.3	420
2		2.0	422
3		2.05	422
center		2.1	423
B-1		1.5	423
2		1.9	422
3		1.95	422
center		1.95	423
C-1		1.25	421
2		1.5	422
3		1.5	422
center		1.95	423

-1.2

-1.55

-1.25

-1.5

$T_s = 422$

$\Delta p \Rightarrow$ all (incld. center) $= 1.8$

Δp(center) $= 1.9$

EMISSION TESTING FIELD DATA

PLANT & CITY	DATE	SAMPLING LOCATION	SAMPLE TYPE
PHILLIPS SWEENY	11/9/82	FECH STACK	M5

$CO_2 = 16.0$
$O_2 = 5.0$
Fyrite Check

RUN NO.	OPERATOR	AMB. TEMP (°F)	BAR. PRESS. (IN. Hg)	STATIC PRESS. (IN. H_2O)	FILTER NUMBER(S)	STACK INSIDE DIMEN. (INCHES)	PITOT TUBE Cp	THERM NO.	PAGE
1A-M5	OBERKROUT	80	30.25	-1.38	3450164	108	.84		1 of 1

PROBE LENGTH AND TYPE	NOZZLE I.D.	NOZZLE NO.	H_2O (%)	SAMPLE BOX NO.	METER BOX NO.	METER ΔH@	METER CAL. FACTOR Y	LEAK CHECK IN. Hg	LEAK CHECK CFM	K FACTOR	C FACTOR	PROBE HEAT SET	BOX HEAT SET	REF. ΔP	RECORD DATA MINS
6' GLASS	.222		15		FB3200	1.006	100	0.12				250	250		10

EMP 394

TRAVERSE POINT NUMBER	SAMPLING TIME, min	CLOCK TIME (24 hr CLOCK)	GAS METER READING (V_m), ft^3	VELOCITY HEAD (Δp_s), in. H_2O	ORIFICE PRESSURE DIFFERENTIAL (ΔH), in. H_2O DESIRED	ORIFICE PRESSURE DIFFERENTIAL (ΔH), in. H_2O ACTUAL	STACK TEMPERATURE (T_s), °F	DRY GAS METER TEMPERATURE INLET ($T_{m_{in}}$), °F	DRY GAS METER TEMPERATURE OUTLET ($T_{m_{out}}$), °F	PUMP VACUUM, in. Hg	SAMPLE BOX TEMPERATURE °F P	SAMPLE BOX TEMPERATURE °F F	IMPINGER TEMPERATURE °F
	0	1157	198.089							—			
	10.		206.85	2.20	2.97	2.97	416	79	77	5.2	441	249	52
	20.		215.64	2.20	2.98	2.98	416	82	77	6.2	423	260	
	30.		224.32	2.20	2.99	2.99	416	86	78	5.7	413	228	104
	40.		232.95	2.15	2.95	2.95	415	87	78	5.6	412	262	
	50.		241.60	2.20	3.01	3.01	415	87	78	6.7	412	260	97
	60.		250.34	2.2	3.01	3.01	415	89	79	7.4	412	257	84
	70.		259.05	2.2	3.02	3.02	415	89	79	7.8	412	254	82
	80.		267.62	2.15	2.96	2.96	415	90	79	8.0	412	261	80
	90.		276.26	2.2	3.02	3.02	415	89	79	8.2	412	261	81
	100.		284.90	2.15	2.96	2.96	414	89	79	8.2	411	263	
	110.		293.41	2.15	2.98	2.98	415	89	79	8.5	411	261	84
	120.	1357	302.228	2.2	3.05	3.05	414	89	79	9.1	410	256	81

[redacted]SS[redacted] TE[redacted]NG [redacted]ELD[redacted]TA

PLANT & CITY	DATE	SAMPLING LOCATION	SAMPLE TYPE
PHILLIPS SWEENY	11/9/92	FCCU STACK	MS

RUN NO.	OPERATOR	AMB. TEMP (°F)	BAR. PRESS. (IN. Hg)	STATIC PRESS. (IN. H_2O)	FILTER NUMBER(S)	STACK INSIDE DIMEN. (INCHES)	PITOT TUBE Cp	THERM NO.	PAGE
16-MS									
1-16	OSTERHOUT	80	30.25	-1.38	3459177	108	.84		1 OF 1

TC 203
P 284
DR 125
FMP 290

PROBE LENGTH AND TYPE	NOZZLE I.D.	NOZZLE NO.	H_2O (%)	SAMPLE BOX NO.	METER BOX NO.	METER Δ H @	METER CAL. FACTOR Y	LEAK CHECK IN. Hg	LEAK CHECK CFM	K FACTOR	C FACTOR	PROBE HEAT SET	BOX HEAT SET	REF. ΔP	RECORD DATA MINS
6' OGARS	.221		15		1085	1.95	.9998	1.0	.018			250	250		10

TRAVERSE POINT NUMBER	SAMPLING TIME, min	CLOCK TIME (24 hr CLOCK)	GAS METER READING (V_m), ft^3	VELOCITY HEAD (Δp_s), in. H_2O	ORIFICE PRESSURE DIFFERENTIAL (ΔH), in. H_2O DESIRED	ORIFICE PRESSURE DIFFERENTIAL (ΔH), in. H_2O ACTUAL	STACK TEMPERATURE (T_s), °F	DRY GAS METER TEMPERATURE INLET ($T_{m_{in}}$), °F	DRY GAS METER TEMPERATURE OUTLET ($T_{m_{out}}$), °F	PUMP VACUUM, in. Hg	SAMPLE BOX TEMPERATURE °F P	SAMPLE BOX TEMPERATURE °F F	IMPINGER TEMPERATURE °F
	0	1158	808.889										
	10.		818.21	2.20	2.97	2.97	416	92	91	8.1	420	257	72
	20.		827.67	2.20	2.98	2.98	416	93	92	8.8	410	254	
	30.		837.00	2.20	2.99	2.99	416	92	85	9.4	408	253	120
	40.		846.01	2.15	2.95	2.95	415	95	86	9.3	407	259	
	50.		855.20	2.20	3.01	3.01	415	95	85	9.8	402	262	104
	60.		864.50	2.2	3.01	3.01	415	97	86	11.0	402	254	91
	70.		873.77	2.2	3.02	3.02	415	99	87	11.3	410	259	86
	80.		883.05	2.15	2.96	2.96	415	99	87	11.7	402	253	82
	90.		892.34	2.2	3.02	3.02	415	99	89	12.8	403	254	83
	100.		901.62	2.15	2.96	2.96	414	99	89	12.0	402	258	
	110.		910.91	2.15	2.98	2.98	415	99	89	12.3	402	239	86
	120.	1258	920.343	2.2	3.05	3.05	414	97	89	13.2	401	262	77
	.		.	.	.	.				.			
	.		.	.	.	.				.			
	.		.	.	.	.				.			
	.		.	.	.	.				.			
	.		.	.	.	.				.			
	.		.	.	.	.				.			
	.		.	.	.	.				.			
	.		.	.	.	.				.			
	.		.	.	.	.				.			
	.		.	.	.	.				.			
	.		.	.	.	.				.			
	.		.	.	.	.				.			

EMISSION TESTING FIELD DATA

PLANT & CITY	DATE	SAMPLING LOCATION	SAMPLE TYPE
Phillips Petro Sweeny	11/09/82	FCC Stack	MSW

RUN NO.	OPERATOR	AMB. TEMP (°F)	BAR. PRESS. (in. Hg)	STATIC PRESS. (in. H_2O)	FILTER NUMBER(S)	STACK INSIDE DIMEN. (INCHES)	PITOT TUBE Cp	THERM NO.	PAGE
1	GMSW Phillips	76	30.26	-1.38	34501 79	108	0.84		1 of 1

PROBE LENGTH AND TYPE	NOZZLE I.D.	NOZZLE NO.	H_2O (%)	SAMPLE BOX NO.	METER BOX NO.	METER Δ H @	METER CAL. FACTOR Y	LEAK CHECK IN. Hg	LEAK CHECK CFM	K FACTOR	C FACTOR	PROBE HEAT SET	BOX HEAT SET	REF. ΔP	RECORD DATA MINS
Graft Glass	224		15		FB7	1.71	1.001	6	0.00			250	250		1.0

TC# 147
Pitot# 278
DR# 124
Imp# 285

Pretest Leak check 15IN 0.005cfm

TRAVERSE POINT NUMBER	SAMPLING TIME, min	CLOCK TIME (24 hr CLOCK)	GAS METER READING (V_m), ft^3	VELOCITY HEAD (Δp_s), in. H_2O	ORIFICE PRESSURE DIFFERENTIAL (ΔH), in. H_2O DESIRED	ORIFICE PRESSURE DIFFERENTIAL (ΔH), in. H_2O ACTUAL	STACK TEMPERATURE (T_s), °F	DRY GAS METER TEMPERATURE INLET ($T_{m_{in}}$), °F	DRY GAS METER TEMPERATURE OUTLET ($T_{m_{out}}$), °F	PUMP VACUUM, in. Hg	SAMPLE BOX TEMPERATURE °F P	SAMPLE BOX TEMPERATURE °F F	IMPINGER TEMPERATURE °F
	0	1158	587.157										
C Port	10.0	1208	597.000	2.5	3.1	3.1	417	81	80	4.9	435	233	76
	20.0	1218	606.660	2.4	3.0	3.0	416	84	80	4.8	411	249	92
	30.0	1228	616.350	2.4	3.0	3.0	416	87	80	4.9	411	247	96
	40.0	1238	626.060	2.4	3.0	3.0	416	90	82	4.9	411	235	96
	50.0	1248	635.780	2.4	3.0	3.0	416	90	82	4.9	411	251	94
	60.0	1258	645.440	2.4	3.0	3.0	416	92	83	4.9	411	250	90
	70.0	1308	655.130	2.4	3.1	3.1	415	92	84	4.9	410	242	84
	80.0	1318	664.790	2.4	3.1	3.1	415	92	84	5.0	410	242	88
	90.0	1328	674.490	2.4	3.0	3.0	416	92	84	5.0	411	258	82
	100.0	1338	684.020	2.4	3.1	3.1	415	93	85	5.1	411	260	78
	110.0	1348	693.720	2.4	3.1	3.1	415	93	85	5.3	410	246	80
	120.0	1358	703.297	2.4	3.1	3.1	415	93	85	5.8	411	243	81

EMISSION TESTING FIELD DATA

PLANT & CITY	DATE	SAMPLING LOCATION	SAMPLE TYPE
Phillipsburg Petrol Junction, NJ	11/10/82	FCC Stack	M5

RUN NO.	OPERATOR	AMB. TEMP (°F)	BAR. PRESS. (in. Hg)	STATIC PRESS. (in. H_2O)	FILTER NUMBER(S)	STACK INSIDE DIAM. (inches)	PITOT TUBE Cp	THERM NO.	PAGE
1	Abrahams	76	30.26	-1.38		108	0.84		1 of 1

PROBE LENGTH AND TYPE	NOZZLE I.D.	NOZZLE NO.	H_2O (%)	SAMPLE BOX NO.	METER BOX NO.	METER ΔH@	METER CAL. FACTOR Y	LEAK CHECK in. Hg	LEAK CHECK CFM	K FACTOR	C FACTOR	PROBE HEAT SET	BOX HEAT SET	DEV. ΔP	RECORD DATA RUNS
6 ft Glass	.226		15		FB2	1.73	0.986	7.20	0.015			250	250		1

Imp# 104

Pretest Leak Check 15 in. @ .005 cfm

Pitot ± ✓

TRAVERSE POINT NUMBER	SAMPLING TIME, min	CLOCK TIME (24 hr CLOCK)	GAS METER READING (V_m), ft^3	VELOCITY HEAD (Δp_s), in. H_2O	ORIFICE PRESSURE DIFFERENTIAL (ΔH), in. H_2O DESIRED	ORIFICE PRESSURE DIFFERENTIAL (ΔH), in. H_2O ACTUAL	STACK TEMPERATURE (T_s), °F	DRY GAS METER TEMPERATURE INLET ($T_{m_{in}}$), °F	DRY GAS METER TEMPERATURE OUTLET ($T_{m_{out}}$), °F	PUMP VACUUM, in. Hg	SAMPLE BOX TEMPERATURE °F P	SAMPLE BOX TEMPERATURE °F F	IMPINGER TEMPERATURE °F
	0	1200	540.938										
D Port	10	1210	550.560	2.5	3.1	3.1	417	74	76	5.5	430	245	82
	20	1220	560.230	2.4	3.0	3.0	416	77	76	6.0	411	262	98
	30	1230	569.850	2.4	3.0	3.0	416	82	78	5.8	410	263	112
B-7	40	1240	579.420	2.4	3.0	3.0	416	83	78	5.8	410	258	90
	50	1250	589.000	2.4	3.0	3.0	416	84	78	5.8	410	256	80
	60	1300	598.590	2.4	3.0	3.0	416	85	80	5.8	410	255	75
	70	1310	608.150	2.4	3.0	3.0	415	86	80	5.8	409	254	74
	80	1320	617.710	2.4	3.0	3.0	415	86	81	5.8	409	258	76
	90	1330	627.350	2.4	3.0	3.0	416	87	81	5.8	410	258	78
	100	1340	636.940	2.4	3.0	3.0	415	87	81	6.1	409	257	78
	110	1350	646.510	2.4	3.0	3.0	415	88	82	6.2	409	256	72
	120	1400	656.139	2.4	3.0	3.0	415	88	82	6.2	409	257	74

QUAD TRAIN SAMPLE RECOVERY AND INTEGRITY SHEET

Plant Phillips Petroleum Sample date 11-9-82

Sample location Unit 27.1 - outlet Recovery date 11-9-82

Run number 1A-M5 Recovered by P.C. & D.S.

Particulate sample type ✓ M5 ____ M5-320 ____ M5-450 ____ M5W

Particulate filter number 3450168 ✓

Particulate filter sample I.D. 4043B ✓

Probe rinse Acetone I.D. 4043A ✓

Purge train 20 min (check when completed) ✓

Location of filter in back half Twist 1&2

MOISTURE

	1st impinger	2nd impinger	3rd impinger	4th impinger	Silica gel
Final wt	682.1 g	696.2 g	624.1 g	____ g	946.2 g
Initial wt	665.6 g	611.9 g	574.0 g	____ g	873.6 g
Net wt	16.5 g	84.3 g	50.1 g	— g	72.6 g

Total moisture 223.5 g 90 % spent

RECOVERED SAMPLE

PROBE RINSE CONTAINER I.D. 4043A ✓

IPA IMP. CONTAINER I.D. 4045A ✓ LIQUID LEVEL MARKED ____

H_2O_2 IMP. CONTAINER I.D. 4046A ✓ LIQUID LEVEL MARKED ____

BLANK CONTAINER(S) I.D. LIQUID LEVEL MARKED

IPA 4040A ✓ ✓

H_2O_2 4039A ✓ ✓

H_2O 4041A ✓ ✓

Acetone 4042A ✓ ✓

Samples stored and locked ____

Remarks ____

LABORATORY CUSTODY

Received by Gloria White Date 11/18/82

Remarks reg. #03882

BLANK Filter Cont. # 3948 B ✓

Filter # 3450160 ✓

Blank for all Runs. (M5-8 only)

QUAD TRAIN SAMPLE RECOVERY AND INTEGRITY SHEET

Plant Phillips Petroleum Sample date 11/9/82
Sample location unit 27.1 - outlet Recovery date 11/9/82
Run number 1B-M5 Recovered by TWC & DS
Particulate sample type ✓ M5 ____ M5-320 ____ M5-450 ____ M5W
Particulate filter number 3450177 ✓
Particulate filter sample I.D. 4047 ~~A~~ B ✓
Probe rinse Acetone I.D. 4047A ✓
Purge train 20 min (check when completed) ✓
Location of filter in back half Twixt 1 & 2

MOISTURE

	1st impinger	2nd impinger	3rd impinger	4th impinger	Silica gel
Final wt	648.4 g	748.3 g	603.1 g	____ g	910.7 g
Initial wt	663.4 g	629.2 g	553.0 g	____ g	~~855.6~~ 841.9 g
Net wt	-15.0 g	119.1 g	50.1 g	— g	68.8 g

Total moisture 223 g 90 % spent

RECOVERED SAMPLE

PROBE RINSE CONTAINER I.D. 4047A ✓
IPA IMP. CONTAINER I.D. 4048A ✓ LIQUID LEVEL MARKED ✓
H_2O_2 IMP. CONTAINER I.D. 4049A ✓ LIQUID LEVEL MARKED ✓
BLANK CONTAINER(S) I.D. LIQUID LEVEL MARKED

IPA 4040 A ✓ ✓
H_2O_2 4039 A ✓ ✓
H_2O 4041 A ✓ ✓
Acetone 4042 A ✓ ✓

Samples stored and locked ____
Remarks ____

LABORATORY CUSTODY

Received by Doris Ornbeta Date 11/18/82
Remarks reg # 03882

QUAD TRAIN SAMPLE RECOVERY AND INTEGRITY SHEET

Plant Phillips Petroleum Sample date 11/9/82
Sample location Unit 27.1 - Outlet Recovery date 11/9/82
Run number 1C-M5W Recovered by PAC & DS
Particulate sample type ____ M5 ____ M5-320 ____ M5-450 ✓ M5W
Particulate filter number 3450170 ✓
Particulate filter sample I.D. 4050B ✓
Probe rinse H_2O I.D. 4050A ✓
Purge train 20 min (check when completed) ✓
Location of filter in back half Rack 1&2

MOISTURE

	1st impinger	2nd impinger	3rd impinger	4th impinger	Silica gel
Final wt	850.7 g	675.9 g	595.4 g	____ g	940.1 g
Initial wt	682.5 g	614.3 g	581.6 g	____ g	873.0 g
Net wt	168.2 g	61.6 g	13.8 g	____ g	57.1 g

Total moisture 310.7 g 90 % spent

RECOVERED SAMPLE

PROBE RINSE CONTAINER I.D. 4050A ✓
IPA IMP. CONTAINER I.D. 4051A ✓ LIQUID LEVEL MARKED ____
H_2O_2 IMP. CONTAINER I.D. 4053A ✓ LIQUID LEVEL MARKED ____
BLANK CONTAINER(S) I.D. LIQUID LEVEL MARKED

IPA	4040A ✓	✓
H_2O_2	4039A ✓	✓
H_2O	4041A ✓	✓
Acetone	4042A N/A	✓

Samples stored and locked ____
Remarks ____

LABORATORY CUSTODY

Received by Lonni Thute Date 11/18/82
Remarks reg. # 03882

QUAD TRAIN SAMPLE RECOVERY AND INTEGRITY SHEET

Plant Phillips Petroleum Sample date 11/9/82
Sample location unit 27.1 - out Recovery date 11/9/82
Run number 1D - M5W Recovered by PC & DS
Particulate sample type ____ M5 ____ M5-320 ____ M5-450 ✓ M5W
Particulate filter number ~~3450169~~ 3450159 ✓
Particulate filter sample I.D. 4054B ✓
Probe rinse H2O I.D. 4054A ✓
Purge train 20 min (check when completed) ✓
Location of filter in back half Between 1 & 2

MOISTURE

	1st impinger	2nd impinger	3rd impinger	4th impinger	Silica gel
Final wt	809.6 g	628.1 g	607.7 g	____ g	928.7 g
Initial wt	648.0 g	615.7 g	569.5 g	____ g	856.0 g
Net wt	161.6 g	12.4 g	38.2 g	____ g	72.7 g

Total moisture 354.9 g 100 % spent

RECOVERED SAMPLE

PROBE RINSE CONTAINER I.D. 4054A ✓
IPA IMP. CONTAINER I.D. 4056A ✓ LIQUID LEVEL MARKED ✓
H_2O_2 IMP. CONTAINER I.D. 4055A ✓ LIQUID LEVEL MARKED ✓
BLANK CONTAINER(S) I.D. LIQUID LEVEL MARKED

IPA	4040-A ✓	✓
H_2O_2	4039-A ✓	✓
H_2O	4041-A ✓	✓
Acetone	4042-A N/A	✓

Samples stored and locked ____
Remarks ____

LABORATORY CUSTODY

Received by Lonnie White Date 11/18/82
Remarks reg. # 03882

DRY MOLECULAR WEIGHT DETERMINATION

PLANT Phillips Sweeny
DATE 11/9/82 TEST NO 1
SAMPLING TIME (24-hr CLOCK) 17:00
SAMPLING LOCATION unit 27.1 outlet
SAMPLE TYPE (BAG, INTEGRATED, CONTINUOUS) Bag
ANALYTICAL METHOD ORSAT
AMBIENT TEMPERATURE
OPERATOR DAC
ORSAT LEAK CHECKED ✓

COMMENTS:

RUN / GAS	1		2		3		AVERAGE NET VOLUME	MULTIPLIER	MOLECULAR WEIGHT OF STACK GAS (DRY BASIS) M_d, lb/lb-mole
	ACTUAL READING	NET	ACTUAL READING	NET	ACTUAL READING	NET			
CO_2	14.6	14.6	14.3	14.3			14.4	44/100	
O_2 (NET IS ACTUAL O_2 READING MINUS ACTUAL CO_2 READING)	17.2	2.6	17.1	2.8			2.7	32/100	
CO (NET IS ACTUAL CO READING MINUS ACTUAL O_2 READING)								28/100	
N_2 (NET IS 100 MINUS ACTUAL CO READING)								28/100	
								TOTAL	

EMISSION TESTING FIELD DATA

PLANT & CITY	DATE	SAMPLING LOCATION	SAMPLE TYPE
PHILLIPS SWEENY	11/1[redacted]/84	FCC STACK	MSE 459

RUN NO.	OPERATOR	AMB. TEMP (°F)	BAR. PRESS. (IN. Hg)	STATIC PRESS. (IN. H_2O)	FILTER NUMBER(S)	STACK INSIDE DIMEN. (INCHES)	PITOT TUBE Cp	THERM NO.	PAGE
24 A5450	RC	[redacted] 30.[redacted]	[redacted]	1.38	34150/154	108	[redacted]		1 of 1

PROBE LENGTH AND TYPE	NOZZLE I.D.	NOZZLE NO.	H_2O (%)	SAMPLE BOX NO.	METER BOX NO.	METER ΔH@	METER CAL. FACTOR Y	LEAK CHECK IN. Hg	LEAK CHECK CFM	K FACTOR	C FACTOR	PROBE HEAT SET	BOX HEAT SET	REF. ΔP	RECORD DATA MINS
6' STAINLESS	2.19		15		[redacted] 3204	1.006	[redacted] 0.097					[redacted] 450	[redacted] 450		10

7 8 9 10	11 12 13 14	15 16 17 18	19 20 21 22 23 24	25 26 27 28 29	30 31 32 33 34 35	36 37 38 39 40 41	42 43 44 45 46 47	48 49 50 51	52 53 54	55 56 57
TRAVERSE POINT NUMBER	SAMPLING TIME, min	CLOCK TIME (24 hr CLOCK)	GAS METER READING (V_m), ft^3	VELOCITY HEAD (Δp_s), in. H_2O	ORIFICE PRESSURE DIFFERENTIAL (ΔH), in. H_2O DESIRED	ORIFICE PRESSURE DIFFERENTIAL (ΔH), in. H_2O ACTUAL	STACK TEMPERATURE (T_s), °F	DRY GAS METER TEMPERATURE INLET ($T_{m_{in}}$), °F / OUTLET ($T_{m_{out}}$), °F	PUMP VACUUM, in. Hg	SAMPLE BOX TEMPERATURE °F P	SAMPLE BOX TEMPERATURE °F F	IMPINGER TEMPERATURE °F
	0	1029	302.[redacted]607									
	10.		310.91	1.95	2.73	2.73	415	75 / 75	7.8	454	392	68
	20.		319.26	1.9	2.67	2.67	415	79 / 75	9.8	446	419	88
	30.		327.64	1.95	2.76	2.76	415	85 / 76	8.6	451	430	122
	40.		335.98	1.95	2.77	2.77	416	87 / 78	8.7	450	441	108
	50.		344.26	1.95	2.77	2.77	417	89 / 80	8.7	452	446	106
	60.		352.46	1.95	2.77	2.77	417	89 / 80	9.6	456	451	107
	70.		360.80	1.95	2.78	2.78	416	89 / 81	10.2	453	456	106
	80.		369.07	1.95	2.79	2.79	416	89 / 81	10.1	453	460	110
	90.		377.44	1.95	2.78	2.78	417	89 / 81	10.1	455	460	111
	100.		385.84	1.9	2.71	2.71	418	89 / 81	9.9	463	460	105
	110.		394.21	1.95	2.78	2.78	417	89 / 81	9.8	449	457	102
	120.	1129	402.529	1.95	2.78	2.78	418	90 / 81	10.2	454	456	104

EMISSION TESTING FIELD DATA

PLANT & CITY	DATE	SAMPLING LOCATION	SAMPLE TYPE
PHILLIPS SUGEN	11/18/92	FCC STACK	MM5 459

RUN NO.	OPERATOR	AMB. TEMP (°F)	BAR. PRESS. (IN. Hg)	STATIC PRESS. (IN. H_2O)	FILTER NUMBER(S)	STACK INSIDE DIMEN. (INCHES)	PITOT TUBE Cp	THERM NO.	PAGE
28M5450	DG	75	30.[illegible]	-.13	3450155	108	.84		0 F 1

PROBE LENGTH AND TYPE	NOZZLE I.D.	NOZZLE NO.	H_2O (%)	SAMPLE BOX NO.	METER BOX NO.	METER Δ H @	METER CAL. FACTOR Y	LEAK CHECK IN. Hg	LEAK CHECK CFM	K FACTOR	C FACTOR	PROBE HEAT SET	BOX HEAT SET	REF. ΔP	RECORD DATA MINS.
6' STAINLESS	.223		15		F05	1.95	.9995	12	.076			450	450		10

Back half

TRAVERSE POINT NUMBER	SAMPLING TIME, min	CLOCK TIME (24 hr CLOCK)	GAS METER READING (V_m), ft^3	VELOCITY HEAD (Δp_s), in. H_2O	ORIFICE PRESSURE DIFFERENTIAL (ΔH), in. H_2O DESIRED	ORIFICE PRESSURE DIFFERENTIAL (ΔH), in. H_2O ACTUAL	STACK TEMPERATURE (T_s), °F	DRY GAS METER TEMPERATURE INLET ($T_{m_{in}}$), °F	DRY GAS METER TEMPERATURE OUTLET ($T_{m_{out}}$), °F	PUMP VACUUM, in. Hg	SAMPLE BOX TEMPERATURE °F P	SAMPLE BOX TEMPERATURE °F F	IMPINGER TEMPERATURE °F
	0	1030	921.798										
	10.		930.74	1.95	2.73	2.73	415	90	79	11.2	492	444	104
	20.		939.52	1.9	2.67	2.67	415	91	80	11.5	492	445	118
	30.		947.37	1.95	2.76	2.76	415	94	84	11.1	490	448	126
	40.		955.05	1.95	2.77	2.77	416	91	86	11.2	479	435	110
	50.		962.72	1.95	2.77	2.77	417	97	85	11.2	478	439	98
	60.		974.57	1.95	2.77	2.77	417	99	85	11.2	472	439	95
	70.		983.37	1.95	2.78	2.78	416	100	86	11.7	470	431	94
	80.		992.12	1.95	2.79	2.79	416	100	88	11.3	472	441	96
	90.		0.88	1.95	2.78	2.78	417	99	88	11.7	481	450	98
	100.		9.68	1.9	2.71	2.71	418	99	89	11.6	466	450	96
	110.		18.49	1.95	2.78	2.78	417	99	89	11.3	454	444	93
	120.	1130	27.382	1.95	2.78	2.78	418	99	89	11.7	459	448	95

EMISSION TESTING FIELD DATA

PLANT & CITY	DATE	SAMPLING LOCATION	SAMPLE TYPE
Phillips Petroleum Sweeny	11/18/92	FCCU Outlet Stack	M5

TC # 2
Pitot # 278
DR # 124
Imp # 285

RUN NO.	OPERATOR	AMB. TEMP (°F)	BAR. PRESS. (IN. Hg)	STATIC PRESS. (IN. H_2O)	FILTER NUMBER(S)	STACK INSIDE DIMEN. (INCHES)	PITOT TUBE Cp	THE RUN NO.	PAGE
2CM5B	Phillips	80	30.13	-1.38	5401/5406	108	0.84		1 OF 1

PROBE LENGTH AND TYPE	NOZZLE I.D.	NOZZLE NO.	H_2O (%)	SAMPLE BOX NO.	METER BOX NO.	METER Δ H @	METER CAL. FACTOR Y	LEAK CHECK IN. Hg	LEAK CHECK CFM	K FACTOR	C FACTOR	PROBE HEAT SET	BOX HEAT SET	REF. ΔP	RECORD DATA MINS
Glass	224		15		FB	1.71	1.90	15	0.01			320	320		10

Pretest Leak Check 15 in Hg 0.01 cfm

TRAVERSE POINT NUMBER	SAMPLING TIME, min	CLOCK TIME (24 hr CLOCK)	GAS METER READING (V_m), ft^3	VELOCITY HEAD (Δp_s), in. H_2O	ORIFICE PRESSURE DIFFERENTIAL (ΔH), in. H_2O DESIRED	ORIFICE PRESSURE DIFFERENTIAL (ΔH), in. H_2O ACTUAL	STACK TEMPERATURE (T_s), °F	DRY GAS METER TEMPERATURE INLET ($T_{m_{in}}$), °F	DRY GAS METER TEMPERATURE OUTLET ($T_{m_{out}}$), °F	PUMP VACUUM, in. Hg	SAMPLE BOX TEMPERATURE °F P	SAMPLE BOX TEMPERATURE °F F	IMPINGER TEMPERATURE °F
	0	1030	703.715										
Port C	10	1040	713.520	2.4	3.1	3.1	423	81	80	7.3	300	331	78
	20	1050	723.330	2.4	3.1	3.1	424	83	80	7.5	318	325	80
	30	1100	733.270	2.4	3.1	3.1	424	88	80	7.8	333	335	90
	40	1110	743.250	2.4	3.2	3.2	425	91	82	8.0	314	327	92
	50	1120	753.140	2.4	3.2	3.2	425	92	83	8.0	324	330	82
1	60	1130	762.990	2.4	3.2	3.2	425	93	84	8.0	324	330	84
5	70	1140	772.820	2.4	3.1	3.1	426	94	84	8.0	322	330	82
	80	1150	782.650	2.4	3.1	3.1	426	94	85	8.0	323	325	78
	90	1200	792.520	2.4	3.2	3.2	425	94	85	8.0	333	328	78
	100	1210	802.330	2.4	3.2	3.2	426	94	86	8.0	327	323	76
	110	1220	812.180	2.4	3.2	3.2	427	93	86	8.0	329	321	77
	120	1230	822.018	2.4	3.2	3.2	426	94	86	8.0	338	323	82

EMISSION TESTING FIELD DATA

PLANT & CITY	DATE	SAMPLING LOCATION	SAMPLE TYPE
Phillips Petroleum SWK Km	11/10/82	Flare Stack	MSB

RUN NO.	OPERATOR	AMB. TEMP (°F)	BAR. PRESS. (IN. Hg)	STATIC PRESS. (IN. H_2O)	FILTER NUMBER(S)	STACK INSIDE DIMEN. (INCHES)	PITOT TUBE C_p	THERM NO.	PAGE
2	Phillips	42	30.25 30.13	-1.38	BH5A157	108	0.84		1 of 1

PROBE LENGTH AND TYPE	NOZZLE I.D.	NOZZLE NO.	H_2O (%)	SAMPLE BOX NO.	METER BOX NO.	METER ΔH@	METER CAL. FACTOR Y	LEAK CHECK IN. Hg	LEAK CHECK CFM	K FACTOR	C FACTOR	PROBE HEAT SET	BOX HEAT SET	REF. ΔP	RECORD DATA RUNS
6 ft Glass	227		15		FB21	1.3	0.986	9.0	0.01			350	350		1

Imp #104

Pretest Leak Check 15 in Hg 0.015 320 329 Pitot + ✓ − ✓

TRAVERSE POINT NUMBER	SAMPLING TIME, min	CLOCK TIME (24 hr CLOCK)	GAS METER READING (V_m), ft^3	VELOCITY HEAD (Δp_s), in. H_2O	ORIFICE PRESSURE DIFFERENTIAL (ΔH), in. H_2O DESIRED	ORIFICE PRESSURE DIFFERENTIAL (ΔH), in. H_2O ACTUAL	STACK TEMPERATURE (T_s), °F	DRY GAS METER TEMPERATURE INLET ($T_{m_{in}}$), °F	DRY GAS METER TEMPERATURE OUTLET ($T_{m_{out}}$), °F	PUMP VACUUM, in. Hg	SAMPLE BOX TEMPERATURE °F P	SAMPLE BOX TEMPERATURE °F F	IMPINGER TEMPERATURE °F
	0	1032	656.349 482										
Port D	10	1042	666.240	2.4	3.1	3.1	423	75	77	7.5	328	326	90
	20	1052	676.070	2.4	3.1	3.1	424	80	77	7.8	331	331	74
	30	1102	685.930	2.4	3.1	3.1	424	85	78	7.8	340	332	98
	40	1112	695.790	2.4	3.1	3.1	425	87	80	8.0	320	321	98
	50	1122	705.680	2.4	3.1	3.1	425	88	81	8.0	325	324	94
	60	1132	715.570	2.4	3.1	3.1	425	88	82	8.0	329	330	88
	70	1142	725.490	2.4	3.2	3.2	426	90	83	8.0	328	334	94
	80	1152	735.390	2.4	3.2	3.2	426	90	83	8.0	329	332	96
	90	1202	745.260	2.4	3.2	3.2	425	90	84	8.0	336	331	96
	100	1212	755.110	2.4	3.2	3.2	426	90	84	8.0	317	318	86
	110	1222	764.960	2.4	3.2	3.2	427	90	85	8.0	323	318	84
	120	1232	774.804	2.4	3.2	3.2	426	90	85	8.0	334	323	88

QUAD TRAIN SAMPLE RECOVERY AND INTEGRITY SHEET

Plant Phillips Petroleum Sample date 11/10/82
Sample location unit 27.1 - outlet Recovery date 11/10/82
Run number 2A - M5450 Recovered by PCGDS
Particulate sample type ____ M5 ____ M5-320 X M5-450 ____ M5W
Particulate filter number 3450154 ✓
Particulate filter sample I.D. 4060B ✓
Probe rinse Acetone I.D. 4060A ✓
Purge train 20 min (check when completed) ✓
Location of filter in back half between 1 & 2

MOISTURE

	1st impinger	2nd impinger	3rd impinger	4th impinger	Silica gel
Final wt	546.0 g	678.0 g	667.0 g	____ g	932.5 g
Initial wt	693.0 g	625.2 g	559.7 g	____ g	840.8 g
Net wt	-147 g	52.8 g	107.3 g	— g	91.7 g

Total moisture 104.8 g 95 % spent

RECOVERED SAMPLE

PROBE RINSE CONTAINER I.D. 4060A ✓
IPA IMP. CONTAINER I.D. 4061A ✓ LIQUID LEVEL MARKED ✓
H_2O_2 IMP. CONTAINER I.D. 4062A ✓ LIQUID LEVEL MARKED ✓
BLANK CONTAINER(S) I.D. LIQUID LEVEL MARKED

IPA	4040A ✓	✓
H_2O_2	4039A ✓	✓
H_2O	4041A ✓	✓
Acetone	4042A ✓	✓

Samples stored and locked ____
Remarks ____

LABORATORY CUSTODY

Received by Gloria White Date 11/18/82
Remarks rcy. #03882

QUAD TRAIN SAMPLE RECOVERY AND INTEGRITY SHEET

Plant Phillips Petroleum Sample date 11/10/82
Sample location Unit 27.1 - outlet Recovery date 11/10/82
Run number 2B - M5 ~~B~~50 Recovered by PC&DS
Particulate sample type ____ M5 X M5-320 X M5-450 ____ M5W
Particulate filter number 3450 155 ✓
Particulate filter sample I.D. 4063B ✓
Probe rinse Acetone I.D. 4063A ✓
Purge train 20 min (check when completed) ✓
Location of filter in back half Tween 1 & 2

MOISTURE

	1st impinger	2nd impinger	3rd impinger	4th impinger	Silica gel
Final wt	530.6 g	713.3 g	694.9 g	____ g	~~787~~ 916.1 g
Initial wt	~~653.0~~ 667.9 g	~~585.5~~ 597.9 g	~~600.7~~ 590.8 g	____ g	838.8 g
Net wt	-137.3 g	115.4 g	104.1 g	____ g	77.3 g

Total moisture 159.5 g 90 % spent

RECOVERED SAMPLE

PROBE RINSE CONTAINER I.D. 4063A ✓
IPA IMP. CONTAINER I.D. 4064A ✓ LIQUID LEVEL MARKED ✓
H_2O_2 IMP. CONTAINER I.D. 4065A ✓ LIQUID LEVEL MARKED ✓
BLANK CONTAINER(S) I.D. LIQUID LEVEL MARKED

IPA	4040A ✓	✓
H_2O_2	4039A ✓	✓
H_2O	4041A ✓	✓
Acetone	4042A ✓	✓

Samples stored and locked ____
Remarks ____

LABORATORY CUSTODY

Received by Lonis Thute Date 11/18/82
Remarks reg. # 03882

Probe 2-C

QUAD TRAIN SAMPLE RECOVERY AND INTEGRITY SHEET

Plant Phillips Petroleum Sample date 11/10/82
Sample location unit 27.1 outlet Recovery date 11/10/82
Run number 2C - M5 [redacted] B Recovered by PC&DS
Particulate sample type ____ M5 X M5-320 [redacted] M5-450 ____ M5W
Particulate filter number 3450156 ✓
Particulate filter sample I.D. 4068B ✓
Probe rinse Acetone I.D. 4068A ✓
Purge train 20 min (check when completed) ✓
Location of filter in back half Tween 147

MOISTURE

	1st impinger	2nd impinger	3rd impinger	4th impinger	Silica gel
Final wt	826.1 g	700.0 g	604.9 g	____ g	836.8 g
Initial wt	657.7 g	613.9 g	586.4 g	[illegible] g	782 g
Net wt	168.4 g	86.1 g	18.5 g	— g	54.8 g

Total moisture 327.8 g 90 % spent

RECOVERED SAMPLE

PROBE RINSE CONTAINER I.D. 4068A ✓
IPA IMP. CONTAINER I.D. 4067A ✓ LIQUID LEVEL MARKED ✓
H_2O_2 IMP. CONTAINER I.D. 4066A ✓ LIQUID LEVEL MARKED ✓
BLANK CONTAINER(S) I.D. LIQUID LEVEL MARKED

IPA 4040A ✓
H_2O_2 4039A ✓ ✓
H_2O 4041A ✓ ✓
Acetone 4042A ✓ ✓

Samples stored and locked ____
Remarks ____

LABORATORY CUSTODY

Received by Lonnie White Date 11/18/82
Remarks reg. # 03882

QUAD TRAIN SAMPLE RECOVERY AND INTEGRITY SHEET

Plant Phillips Petroleum Sample date 11/10/82
Sample location unit 27.1 - outlet Recovery date 11/10/82
Run number 2D - M5 - B Recovered by PC&DS
Particulate sample type ____ M5 X M5-320 ____ M5-450 ____ M5W
Particulate filter number 3450 157 ✓
Particulate filter sample I.D. 4057B ✓
Probe rinse Acetone I.D. 4057A ✓
Purge train 20 min (check when completed) ✓
Location of filter in back half tween 1 & 2

MOISTURE

	1st impinger	2nd impinger	3rd impinger	4th impinger	Silica gel
Final wt	802.4 g	693.9 g	629.3 g	____ g	924.2 g
Initial wt	670.7 g	602.3 g	606.1 g	____ g	846.5 g
Net wt	131.7 g	91.6 g	23.2 g	— g	77.7 g

Total moisture 324.2 g 80 % spent

RECOVERED SAMPLE

PROBE RINSE CONTAINER I.D. 4057A ✓
IPA IMP. CONTAINER I.D. 4058A ✓ LIQUID LEVEL MARKED ✓
H_2O_2 IMP. CONTAINER I.D. 4059A ✓ LIQUID LEVEL MARKED ✓
BLANK CONTAINER(S) I.D. LIQUID LEVEL MARKED

IPA	4040A ✓	✓
H_2O_2	4039A ✓	✓
H_2O	4041A ✓	✓
Acetone	4042A ✓	✓

Samples stored and locked ____
Remarks ____

LABORATORY CUSTODY

Received by Alonzo White Date 11/18/82
Remarks reg. # 03882

DRY MOLECULAR WEIGHT DETERMINATION

PLANT Phillips Sweeny
DATE 11/9/82 TEST NO 2
SAMPLING TIME (24-hr CLOCK)
SAMPLING LOCATION Unit 27.1 outlet
SAMPLE TYPE (BAG, INTEGRATED, CONTINUOUS) Int Bag
ANALYTICAL METHOD ORSAT
AMBIENT TEMPERATURE 82
OPERATOR [illegible]
ORSAT LEAK CHECKED ✓

COMMENTS:

RUN / GAS	1		2		3		AVERAGE NET VOLUME	MULTIPLIER	MOLECULAR WEIGHT OF STACK GAS (DRY BASIS) M_d, lb/lb-mole
	ACTUAL READING	NET	ACTUAL READING	NET	ACTUAL READING	NET			
CO_2	15.2	15.2	14.9	14.1			15.0	44/100	
O_2 (NET IS ACTUAL O_2 READING MINUS ACTUAL CO_2 READING)	16.2	1.0	16.4	1.5			1.3	32/100	
CO (NET IS ACTUAL CO READING MINUS ACTUAL O_2 READING)								28/100	
N_2 (NET IS 100 MINUS ACTUAL CO READING)								28/100	
								TOTAL	

EMISSION TESTING FIELD DATA

PLANT & CITY	DATE	SAMPLING LOCATION	SAMPLE TYPE
PHILLIPS SWEENY	11/10/82	FCC STACK	MSW

RUN NO.	OPERATOR	AMB. TEMP (°F)	BAR. PRESS. (IN. Hg)	STATIC PRESS. (IN. H_2O)	FILTER NUMBER(S)	STACK INSIDE DIMEN. (INCHES)	PITOT TUBE Cp	THERM NO.	PAGE
3	[illegible]	80	30.10	-1.38	3450123	108	.84		10 of 1

PROBE LENGTH AND TYPE	NOZZLE I.D.	NOZZLE NO.	H_2O (%)	SAMPLE BOX NO.	METER BOX NO.	METER ΔH@	METER CAL. FACTOR Y	LEAK CHECK IN. Hg	LEAK CHECK CFM	K FACTOR	C FACTOR	PROBE HEAT SET	BOX HEAT SET	REF. ΔP	RECORD DATA MINS
6' GLASS	.222		12		1.99	1.99	1.006	20	0.09			250	250		10

TRAVERSE POINT NUMBER	SAMPLING TIME, min	CLOCK TIME (24 hr CLOCK)	GAS METER READING (V_m), ft^3	VELOCITY HEAD (Δp_s), in. H_2O	ORIFICE PRESSURE DIFFERENTIAL (ΔH), in. H_2O DESIRED	ORIFICE PRESSURE DIFFERENTIAL (ΔH), in. H_2O ACTUAL	STACK TEMPERATURE (T_s), °F	DRY GAS METER TEMPERATURE INLET ($T_{m_{in}}$), °F	DRY GAS METER TEMPERATURE OUTLET ($T_{m_{out}}$), °F	PUMP VACUUM, in. Hg	SAMPLE BOX TEMPERATURE °F P	SAMPLE BOX TEMPERATURE °F F	IMPINGER TEMPERATURE °F
	0	1339	402.[illegible]										
	10.		411.52	2.1	2.96	2.96	417	81	81	5.8	235	260	
	20.	*	420.04	2.05	2.89	2.89	417	85	81	6.0	265	258	75
	30.		428.67	2.10	2.99	2.99	416	87	81	6.1	236	249	117
	40.		437.31	2.05	2.93	2.93	415	89	81	6.1	257	257	122
	50.		445.94	2.1	3.00	3.00	415	90	82	5.9	229	253	114
	60.		454.44	2.05	2.94	2.94	414	90	82	6.4	236	236	93
	70.		462.99	2.05	2.93	2.93	415	91	82	6.7	237	248	89
	80.		471.49	2.1	3.00	3.00	416	91	82	6.9	246	258	87
	90.		479.88	2.1	3.00	3.00	416	91	81	7.1	248	251	84
	100.		488.30	2.1	3.00	3.00	416	91	81	7.2	255	249	83
	110.		496.82	2.1	3.00	3.00	417	89	81	7.7	256	259	84
	120.	1559	505.251	2.1	2.99	2.99	417	89	81	7.7	289	250	85

B-22

* probe heat gone (short) - put in stack further to get temp. up - no cord. on Pitot holder

[redacted]SSI[redacted]TES[redacted]NG [redacted]LD [redacted]A

PLANT & CITY	DATE	SAMPLING LOCATION	SAMPLE TYPE
PHILLIPS SWEENY	11/10/82	FCC STACK	PSW

RUN NO.	OPERATOR	AMB. TEMP (°F)	BAR. PRESS. (IN. Hg)	STATIC PRESS. (IN. H_2O)	FILTER NUMBER(S)	STACK INSIDE DIMEN. (INCHES)	PITOT TUBE Cp	THERM NO.	PAGE
3	[illegible]	70	30.19	-1.38	34/59/63	104	.84		1 of 1

PROBE LENGTH AND TYPE	NOZZLE I.D.	NOZZLE NO.	H_2O (%)	SAMPLE BOX NO.	METER BOX NO.	METER ΔH@	METER CAL. FACTOR Y	LEAK CHECK IN. Hg	LEAK CHECK CFM	K FACTOR	C FACTOR	PROBE HEAT SET	BOX HEAT SET	REF. ΔP	RECORD DATA MINS
6' STAINLESS	.321		12		1.85	1.95	1.55	14.0	.012			250	250		60

TRAVERSE POINT NUMBER	SAMPLING TIME, min	CLOCK TIME (24 hr CLOCK)	GAS METER READING (V_m), ft^3	VELOCITY HEAD (Δp_s), in. H_2O	ORIFICE PRESSURE DIFFERENTIAL (ΔH), in. H_2O DESIRED	ORIFICE PRESSURE DIFFERENTIAL (ΔH), in. H_2O ACTUAL	STACK TEMPERATURE (T_s), °F	DRY GAS METER TEMPERATURE INLET ($T_{m_{in}}$), °F	DRY GAS METER TEMPERATURE OUTLET ($T_{m_{out}}$), °F	PUMP VACUUM, in. Hg	SAMPLE BOX TEMPERATURE °F P	SAMPLE BOX TEMPERATURE °F F	IMPINGER TEMPERATURE °F
	0	1400	28[illegible].842										
	10.		37.22	2.1	2.96	2.96	417	89	86	8.3	248	252	67
	20.		46.97	2.05	2.89	2.89	418	89	85	8.8	269	257	78
	30.		56.29	2.1	2.99	2.99	416	99	87	8.8	250	249	119
	40.		65.47	2.05	2.98	2.98	415	99	88	9.1	251	254	125
	50.		74.69	2.1	3.00	3.00	415	99	88	9.3	254	241	125
	60.		83.85	2.05	2.94	2.94	414	100	88	9.9	252	258	99
	70.		93.12	2.05	2.98	2.98	415	101	89	10.8	258	257	84
	80.		102.38	2.1	3.00	3.00	416	101	89	11.1	257	251	85
	90.		111.65	2.1	3.00	3.00	416	101	89	11.7	258	261	85
	100.		120.96	2.1	3.00	3.00	416	100	89	11.9	256	259	87
	110.		130.24	2.1	3.00	3.00	417	99	89	12.8	255	253	89
	120.	1600	139.609	2.1	2.99	2.99	417	97	88	13.1	257	254	83

EMISSION TESTING FIELD DATA

PLANT & CITY	DATE	SAMPLING LOCATION	SAMPLE TYPE
Philtrips Portrio Sweeney	1/6/1/10/82	FGC Stack	M5

TC # 247
Pitot # 278
DR # 124
Imp # 285

RUN NO.	OPERATOR	AMB. TEMP (°F)	BAR. PRESS. (IN. Hg)	STATIC PRESS. (IN. H_2O)	FILTER NUMBER(S)	STACK INSIDE DIMEN. (INCHES)	PITOT TUBE Cp	THERM NO.	PAGE
3 CM5250	Philtrips	78	31.91	-1.38	34501/716	108	0.84		1 of 1

PROBE LENGTH AND TYPE	NOZZLE I.D.	NOZZLE NO.	H_2O (%)	SAMPLE BOX NO.	METER BOX NO.	METER ΔH@	METER CAL. FACTOR Y	LEAK CHECK IN. Hg	LEAK CHECK CFM	K FACTOR	C FACTOR	PROBE HEAT SET	BOX HEAT SET	REF. ΔP	RECORD DATA MINS
16 Pitt Glass	224		14		587	1.71	1.901	15	0.00			250	250		10

Pretest Leak Check 15 in Hg 0.012 cfm

TRAVERSE POINT NUMBER	SAMPLING TIME, min	CLOCK TIME (24 hr CLOCK)	GAS METER READING (V_m), ft^3	VELOCITY HEAD (Δp_s), in. H_2O	ORIFICE PRESSURE DIFFERENTIAL (ΔH), in. H_2O DESIRED	ORIFICE PRESSURE DIFFERENTIAL (ΔH), in. H_2O ACTUAL	STACK TEMPERATURE (T_s), °F	DRY GAS METER TEMPERATURE INLET ($T_{m_{in}}$), °F	DRY GAS METER TEMPERATURE OUTLET ($T_{m_{out}}$), °F	PUMP VACUUM, in. Hg	SAMPLE BOX TEMPERATURE °F P	SAMPLE BOX TEMPERATURE °F F	IMPINGER TEMPERATURE °F
	0	1400	822.312										
Port C	10.	1410	832.260	2.4	3.2	3.2	423	86	85	5.5	262	248	78
	20.	1420	842.130	2.4	3.2	3.2	421	87	84	5.0	260	249	74
	30.	1430	852.050	2.4	3.2	3.2	421	90	84	5.0	250	232	72
	40.	1440	861.960	2.4	3.2	3.2	421	95	85	5.0	249	248	86
	50.	1450	871.910	2.4	3.2	3.2	419	94	85	5.0	252	249	90
	60.	1500	881.840	2.4	3.2	3.2	419	95	85	5.0	250	257	94
	70.	1510	891.790	2.4	3.2	3.2	420	96	86	5.0	250	255	92
	80.	1520	901.720	2.4	3.2	3.2	420	96	88	5.0	248	257	86
	90.	1530	911.640	2.4	3.2	3.2	420	96	88	5.0	247	253	82
	100.	1540	921.590	2.4	3.2	3.2	420	96	88	5.0	245	258	76
	110.	1550	931.460	2.4	3.2	3.2	421	94	87	5.3	245	255	78
	120.	1600	941.314	2.4	3.2	3.2	420	94	87	5.3	248	252	84

EMISSION TESTING FIELD DATA

PLANT & CITY	DATE	SAMPLING LOCATION	SAMPLE TYPE
Phillips Petroleum Sweeny	11/10/82	FCC Stack	M5

RUN NO.	OPERATOR	AMB. TEMP (°F)	BAR. PRESS. (IN. Hg)	STATIC PRESS. (IN. H_2O)	FILTER NUMBER(S)	STACK INSIDE DIAM. (INCHES)	PITOT TUBE Cp	THERM NO.	PAGE
3DM5250	Phillips	80	30.16	-1.38	34501612	108	0.84		0 F

Imp # 104

PROBE LENGTH AND TYPE	NOZZLE I.D.	NOZZLE NO.	H_2O (%)	SAMPLE BOX NO.	METER BOX NO.	METER ΔH@	METER CAL. FACTOR Y	LEAK CHECK IN. Hg	LEAK CHECK CFM	K FACTOR	C FACTOR	PROBE HEAT SET	BOX HEAT SET	REF. ΔP	RECORD DATA MINS
6 ft Glass	.226		12		FB2	1.73	0.9816	7.5	0.011			250	250		10

Pretest Leak Check 15 in Hg 0.015 cfm Pitot ± ✓

TRAVERSE POINT NUMBER	SAMPLING TIME, min	CLOCK TIME (24 hr CLOCK)	GAS METER READING (V_m), ft^3	VELOCITY HEAD (Δp_s), in. H_2O	ORIFICE PRESSURE DIFFERENTIAL (ΔH), in. H_2O DESIRED	ORIFICE PRESSURE DIFFERENTIAL (ΔH), in. H_2O ACTUAL	STACK TEMPERATURE (T_s), °F	DRY GAS METER TEMPERATURE INLET ($T_{m_{in}}$), °F	DRY GAS METER TEMPERATURE OUTLET ($T_{m_{out}}$), °F	PUMP VACUUM, in. Hg	SAMPLE BOX TEMPERATURE °F P	SAMPLE BOX TEMPERATURE °F F	IMPINGER TEMPERATURE °F
	0	1402	775.388										
Port D	10.	1412	785.400	2.4	3.1	3.1	423	80	82	6.0	266	254	82
	20.	1422	795.210	2.4	3.1	3.1	421	81	80	5.8	268	284	66
	30.	1432	805.040	2.4	3.1	3.1	421	85	81	5.8	255	249	68
8-25	40.	1442	814.900	2.4	3.2	3.2	421	89	81	5.8	248	253	64
	50.	1452	824.860	2.4	3.2	3.2	419	90	82	5.6	251	252	70
	60.	1502	834.720	2.4	3.2	3.2	419	90	83	5.6	250	264	72
	70.	1512	844.680	2.4	3.2	3.2	420	90	84	5.8	252	245	74
	80.	1522	854.650	2.4	3.2	3.2	420	92	85	6.0	249	265	82
	90.	1532	864.660	2.4	3.2	3.2	420	92	85	6.0	246	270	76
	100.	1542	874.540	2.4	3.2	3.2	420	92	85	6.2	240	250	70
	110.	1552	884.390	2.4	3.2	3.2	421	89	84	6.2	239	265	72
	120.	1602	894.116	2.4	3.2	3.2	420	89	84	6.2	255	260	78

QUAD TRAIN SAMPLE RECOVERY AND INTEGRITY SHEET

Plant Phillips Sample date 11/10/82
Sample location unit 27.1 outlet Recovery date 11/11/82
Run number 3A-M5W Recovered by PC+DS
Particulate sample type ____ M5 ____ M5-320 ____ M5-450 ✓ M5W
Particulate filter number 3450173 ✓
Particulate filter sample I.D. 4078 B ✓
Probe rinse WATER I.D. 4078 A ✓
Purge train 20 min (check when completed) ____
Location of filter in back half 1st 2nd Imp.

MOISTURE

	1st impinger	2nd impinger	3rd impinger	4th impinger	Silica gel
Final wt	671.7 g	701.5 g	619.2 g	____ g	885.1 g
Initial wt	665.3 g	609.6 g	586.1 g	____ g	802.5 g
Net wt	6.4 g	91.9 g	33.1 g	— g	82.6 g

Total moisture 214 g ____ 90 % spent

RECOVERED SAMPLE

PROBE RINSE CONTAINER I.D. 4078A ✓
IPA IMP. CONTAINER I.D. 4079 A ✓ LIQUID LEVEL MARKED ____
H_2O_2 IMP. CONTAINER I.D. 4080 A ✓ LIQUID LEVEL MARKED ____
BLANK CONTAINER(S) I.D. LIQUID LEVEL MARKED

IPA	4040 A ✓	✓
H_2O_2	4039 A ✓	✓
H_2O	4041 A ✓	✓
Acetone	4042 A N/A	✓

Samples stored and locked ____
Remarks ____

LABORATORY CUSTODY

Received by Lonie White Date 11/18/82
Remarks reg. # 03882

QUAD TRAIN SAMPLE RECOVERY AND INTEGRITY SHEET

Plant Phillips Sample date 11/10/82
Sample location Unit 27.1 outlet Recovery date 11/11/82
Run number 3B M5W Recovered by AC&DS
Particulate sample type ____ M5 ____ M5-320 ____ M5-450 ✓ M5W
Particulate filter number 3450 163 ✓
Particulate filter sample I.D. 4076 B ✓
Probe rinse H_2O I.D. 4075 A ✓
Purge train 20 min (check when completed) ✓
Location of filter in back half between 1 & 2

MOISTURE

	1st impinger	2nd impinger	3rd impinger	4th impinger	Silica gel
Final wt	651.9 g	721.2 g	624.7 g	____ g	950.4 g
Initial wt	666.6 g	614.1 g	571.2 g	____ g	861.1 g
Net wt	-14.7 g	107.1 g	53.5 g	— g	89.3 g

Total moisture 235.2 g 80 % spent

RECOVERED SAMPLE

PROBE RINSE CONTAINER I.D. 4075 A ✓
IPA IMP. CONTAINER I.D. 4076 A ✓ LIQUID LEVEL MARKED ✓
H_2O_2 IMP. CONTAINER I.D. 4077 A ✓ LIQUID LEVEL MARKED ✓
BLANK CONTAINER(S) I.D. LIQUID LEVEL MARKED

IPA	4040 A ✓		✓
H_2O_2	4039 A ✓		✓
H_2O	4041 A ✓		✓
Acetone	4042 A	N/A	✓

Samples stored and locked ____
Remarks ____

LABORATORY CUSTODY

Received by Gloria White Date 11/18/82
Remarks reg. # 03882

QUAD TRAIN SAMPLE RECOVERY AND INTEGRITY SHEET

Plant Phillips Sample date 11/10/82
Sample location Unit 27.1 outlet Recovery date 11/11/82
Run number 3C-M5 Recovered by PC&DS
Particulate sample type ✓ M5 ____ M5-320 ____ M5-450 ____ M5W
Particulate filter number 3450 176 ✓
Particulate filter sample I.D. 4072 B ✓
Probe rinse Acetone I.D. 4072A ✓
Purge train 20 min (check when completed) ✓
Location of filter in back half 1 & 2nd Imp.

MOISTURE

	1st impinger	2nd impinger	3rd impinger	4th impinger	Silica gel
Final wt	853.2 g	703.7 g	598.5 g	____ g	910.6 g
Initial wt	689.0 g	629.7 g	575.1 g	____ g	825.5 g
Net wt	164.2 g	74.0 g	23.4 g	— g	85.1 g

Total moisture 346.7 g 85 % spent

RECOVERED SAMPLE

PROBE RINSE CONTAINER I.D. 4072 A ✓
IPA IMP. CONTAINER I.D. 4073 A ✓ LIQUID LEVEL MARKED ✓
H_2O_2 IMP. CONTAINER I.D. 4074 A ✓ LIQUID LEVEL MARKED ✓
BLANK CONTAINER(S) I.D. LIQUID LEVEL MARKED

IPA 4040 A ✓ ✓
H_2O_2 4039 A ✓ ✓
H_2O 4041 A ✓ ✓
Acetone 4042 A ✓ ✓

Samples stored and locked ____
Remarks ____

LABORATORY CUSTODY

Received by Gloria Thute Date 11/18/82
Remarks reg. # 03882

QUAD TRAIN SAMPLE RECOVERY AND INTEGRITY SHEET

Plant Phillips Sample date 11/10/82
Sample location unit 27.1 outlet Recovery date 11/11/82
Run number 3D - M5 Recovered by PCEDS
Particulate sample type ✓ M5 ____ M5-320 ____ M5-450 ____ M5W
Particulate filter number 3450 162 ✓
Particulate filter sample I.D. 4071 B ✓
Probe rinse Acetone I.D. 4071 A ✓
Purge train 20 min (check when completed) ✓
Location of filter in back half 1st & 2nd Imp.

MOISTURE

	1st impinger	2nd impinger	3rd impinger	4th impinger	Silica gel
Final wt	826.5 g	681.9 g	623.1 g	____ g	945.3 g
Initial wt	643.9 g	608.9 g	584.5 g	____ g	857.1 g
Net wt	182.6 g	73.0 g	38.6 g	— g	88.2 g

Total moisture 382.4 g 85 % spent

RECOVERED SAMPLE

PROBE RINSE CONTAINER I.D. 4071 A ✓
IPA IMP. CONTAINER I.D. 4069 A ✓ LIQUID LEVEL MARKED ✓
H_2O_2 IMP. CONTAINER I.D. 4070 A ✓ LIQUID LEVEL MARKED ✓
BLANK CONTAINER(S) I.D. LIQUID LEVEL MARKED

IPA 4090 A ✓ ✓
H_2O_2 4039 A ✓ ✓
H_2O 4091 A ✓ ✓
Acetone 4090 A ✓ ✓

Samples stored and locked ____
Remarks ____

LABORATORY CUSTODY

Received by Diana Dhute Date 11/18/82
Remarks reg. #03882

DRY MOLECULAR WEIGHT DETERMINATION

PLANT Phillips Sweeny
DATE 11/10/82 TEST NO 3
SAMPLING TIME (24-hr CLOCK)
SAMPLING LOCATION Cent 27 / outlet
SAMPLE TYPE (BAG, INTEGRATED, CONTINUOUS) Ing. Bag
ANALYTICAL METHOD ORSAT
AMBIENT TEMPERATURE 82
OPERATOR PAO
ORSAT LEAK CHECKED ✓

COMMENTS:

RUN / GAS	1		2		3		AVERAGE NET VOLUME	MULTIPLIER	MOLECULAR WEIGHT OF STACK GAS (DRY BASIS) M_d, lb/lb-mole
	ACTUAL READING	NET	ACTUAL READING	NET	ACTUAL READING	NET			
CO_2	14.4	14.4	14.8	14.8			14.6	44/100	
O_2 (NET IS ACTUAL O_2 READING MINUS ACTUAL CO_2 READING)	16.8	2.4	17.4	2.6			2.5	32/100	
CO (NET IS ACTUAL CO READING MINUS ACTUAL O_2 READING)								28/100	
N_2 (NET IS 100 MINUS ACTUAL CO READING)								28/100	
								TOTAL	

[redacted]SSI[redacted]TES[redacted]NG [redacted]LD [redacted]A

PLANT & CITY	DATE	SAMPLING LOCATION	SAMPLE TYPE
PHILLIPS SWEENY	11/11/82	FCC STACK	NF-450

RUN NO.	OPERATOR	AMB. TEMP (°F)	BAR. PRESS. (IN. Hg)	STATIC PRESS. (IN. H_2O)	FILTER NUMBER(S)	STACK INSIDE DIMEN. (INCHES)	PITOT TUBE C_p	THERM NO.	PAGE
[redacted]	DO	75	29.92	-1.38	3450222	108	.84		1 OF 1

PROBE LENGTH AND TYPE	NOZZLE I.D.	NOZZLE NO.	H_2O (%)	SAMPLE BOX NO.	METER BOX NO.	METER ΔH@	METER CAL. FACTOR Y	LEAK CHECK IN. Hg	LEAK CHECK CFM	K FACTOR	C FACTOR	PROBE HEAT SET	BOX HEAT SET	REF. ΔP	RECORD DATA MINS
6' GLASS	.219		10		1.32200	1.006	9.0	.006				450	450		10

TRAVERSE POINT NUMBER	SAMPLING TIME, min	CLOCK TIME (24 hr CLOCK)	GAS METER READING (V_m), ft^3	VELOCITY HEAD (Δp_s), in. H_2O	ORIFICE PRESSURE DIFFERENTIAL (ΔH), in. H_2O DESIRED	ORIFICE PRESSURE DIFFERENTIAL (ΔH), in. H_2O ACTUAL	STACK TEMPERATURE (T_s), °F	DRY GAS METER TEMPERATURE INLET ($T_{m_{in}}$), °F	DRY GAS METER TEMPERATURE OUTLET ($T_{m_{out}}$), °F	PUMP VACUUM, in. Hg	SAMPLE BOX TEMPERATURE °F P	SAMPLE BOX TEMPERATURE °F F	IMPINGER TEMPERATURE °F
	0	1133	505.[illegible]										
	10.		513.94	1.95	2.92	2.92	420	74	73	7.9	474	350	
	20.		522.30	1.9	2.86	2.86	420	77	73	8.2	470	377	84
	30.		531.04	1.95	2.97	2.97	420	84	73	8.4	470	376	132
	40.		539.53	1.9	2.89	2.89	420	86	75	7.5	467	377	122
	50.		548.06	1.9	2.89	2.89	420	86	77	7.6	463	380	110
	60.		556.66	1.95	2.98	2.98	420	88	79	7.6	469	366	105
	70.		565.25	1.95	2.98	2.98	420	87	79	8.1	475	364	99
	80.		573.88	1.95	2.98	2.98	420	88	79	8.3	475	363	103
	90.		582.49	1.95	2.98	2.98	420	89	79	8.5	475	367	109
	100.		591.17	1.9	2.91	2.91	420	89	79	8.5	475	363	110
	110.		599.80	1.9	2.91	2.91	420	89	80	8.4	470	364	101
	120.	1333	608.480	1.95	2.98	2.98	420	89	80	8.7	496	352	100
	.		.	.	.	.				.			
	.		.	.	.	.				.			
	.		.	.	.	.				.			
	.		.	.	.	.				.			
	.		.	.	.	.				.			
	.		.	.	.	.				.			
	.		.	.	.	.				.			
	.		.	.	.	.				.			
	.		.	.	.	.				.			
	.		.	.	.	.				.			
	.		.	.	.	.				.			
	.		.	.	.	.				.			

EMISSION TESTING FIELD DATA

PLANT & CITY	DATE	SAMPLING LOCATION	SAMPLE TYPE
PHILLIPS SWEENY	11/1/82	FCC STACK	MS-459

RUN NO.	OPERATOR	AMB. TEMP (°F)	BAR. PRESS. (IN. Hg)	STATIC PRESS. (IN. H_2O)	FILTER NUMBER(S)	STACK INSIDE DIMEN. (INCHES)	PITOT TUBE Cp	THERM NO.	PAGE
4BM545	DO	75	29.92	-1.38	345022	196	.84		1 OF 1

PROBE LENGTH AND TYPE	NOZZLE I.D.	NOZZLE NO.	H_2O (%)	SAMPLE BOX NO.	METER BOX NO.	METER ΔH@	METER CAL. FACTOR Y	LEAK CHECK IN. Hg	LEAK CHECK CFM	K FACTOR	C FACTOR	PROBE HEAT SET	BOX HEAT SET	REF. ΔP	RECORD DATA MINS
6' GLASS	.223		8.0		1.85	1.95	.9915	15	0.18			450	450		10

TRAVERSE POINT NUMBER	SAMPLING TIME, min	CLOCK TIME (24 hr CLOCK)	GAS METER READING (V_m), ft^3	VELOCITY HEAD (Δp_s), in. H_2O	ORIFICE PRESSURE DIFFERENTIAL (ΔH), in. H_2O DESIRED	ORIFICE PRESSURE DIFFERENTIAL (ΔH), in. H_2O ACTUAL	STACK TEMPERATURE (T_s), °F	DRY GAS METER TEMPERATURE INLET ($T_{m_{in}}$), °F	DRY GAS METER TEMPERATURE OUTLET ($T_{m_{out}}$), °F	PUMP VACUUM, in. Hg	SAMPLE BOX TEMPERATURE °F P	SAMPLE BOX TEMPERATURE °F F	IMPINGER TEMPERATURE °F
	0	1134	139.905										
	10.		149.26	1.95	2.92	2.92	420	77	78	9.7	454	309	[illegible]
	20.		158.55	1.9	2.86	2.86	420	81	78	10.3	466	332	78
	30.		167.94	1.95	2.97	2.97	420	93	80	10.8	489	344	118
	40.		177.05	1.9	2.89	2.89	420	91	82	10.2	492	336	126
	50.		186.12	1.9	2.89	2.89	420	93	81	10.5	494	342	104
	60.		195.45	1.95	2.98	2.98	420	94	82	11.2	491	331	89
	70.		204.76	1.95	2.98	2.98	420	95	83	11.7	491	316	89
	80.		214.06	1.95	2.98	2.98	420	95	83	12.2	492	326	87
	90.		223.37	1.95	2.98	2.98	420	95	84	12.3	492	326	89
	100.		232.62	1.9	2.91	2.91	420	94	84	13.2	491	325	84
	110.		241.94	1.9	2.91	2.91	420	94	85	13.6	491	315	87
	120.	1334	251.129	1.95	2.98	2.98	420	95	85	14.6	493	301	89
	.		.	.	.	.				.			
	.		.	.	.	.				.			
	.		.	.	.	.				.			
	.		.	.	.	.				.			
	.		.	.	.	.				.			
	.		.	.	.	.				.			
	.		.	.	.	.				.			
	.		.	.	.	.				.			
	.		.	.	.	.				.			
	.		.	.	.	.				.			
	.		.	.	.	.				.			
	.		.	.	.	.				.			

EMISSION TESTING FIELD DATA

PLANT & CITY	DATE	SAMPLING LOCATION	SAMPLE TYPE
Phillips Petroleum Sweeny	11/11/82	FCC Stack	MS

TC # 547
Pitot # 278
DR # 124
Imp # 285

RUN NO.	OPERATOR	AMB. TEMP (°F)	BAR. PRESS. (in. Hg)	STATIC PRESS. (in. H_2O)	FILTER NUMBER(S)	STACK INSIDE DIAM. (INCHES)	PITOT TUBE Cp	THERM NO.	PAGE
MCM5320	Phillips	75	29.92	-1.38	345023	108	0.84		1 OF 1

PROBE LENGTH AND TYPE	NOZZLE I.D.	NOZZLE NO.	H_2O (%)	SAMPLE BOX NO	METER BOX NO.	METER Δ H @	METER CAL. FACTOR Y	LEAK CHECK in. Hg	LEAK CHECK CFM	K FACTOR	C FACTOR	PROBE HEAT SET	BOX HEAT SET	REF. ΔP	RECORD DATA MINS
6 ft Glass	224		12		FB7	1.71	1.010	8.5	0.10			320	320		0

Pretest Leak Check 15 in Hg 0.008 cfm

TRAVERSE POINT NUMBER	SAMPLING TIME, min	CLOCK TIME (24 hr CLOCK)	GAS METER READING (V_m), ft^3	VELOCITY HEAD (Δp_s), in. H_2O	ORIFICE PRESSURE DIFFERENTIAL (ΔH), in. H_2O DESIRED	ACTUAL	STACK TEMPERATURE (T_s), °F	DRY GAS METER TEMPERATURE INLET ($T_{m_{in}}$), °F	OUTLET ($T_{m_{out}}$), °F	PUMP VACUUM, in. Hg	SAMPLE BOX TEMPERATURE °F P	F	IMPINGER TEMPERATURE °F
	0	1132	94 / .491										
Port C	10	1142	951 .380	2.4	3.2	3.2	423	81	80	6.0	343	325	88
	20	1152	961 .270	2.4	3.2	3.2	420	84	81	6.0	340	333	84
	30	1202	971 .240	2.4	3.2	3.2	419	88	81	6.0	332	327	96
	40	1212	981 .290	2.4	3.2	3.2	418	91	82	6.2	328	322	98
1	50	1222	991 .310	2.4	3.2	3.2	418	92	83	6.4	321	334	102
3	60	1232	001 .340	2.4	3.2	3.2	417	93	85	6.4	325	329	110
	70	1242	011 .360	2.4	3.2	3.2	417	93	85	6.4	325	331	102
	80	1252	021 .330	2.4	3.2	3.2	417	93	85	6.4	322	322	82
	90	1302	031 .450	2.4	3.2	3.2	417	94	86	6.5	326	318	82
	100	1312	041 .520	2.4	3.2	3.2	416	94	86	7.0	320	321	78
	110	1322	051 .570	2.4	3.2	3.2	418	94	86	7.2	320	322	84
	120	1332	061 .585	2.4	3.2	3.2	417	94	86	7.5	321	321	84

EMISSION TESTING FIELD DATA

PLANT & CITY	DATE	SAMPLING LOCATION	SAMPLE TYPE
Phillips Petroleum Sweeny	1/1/82	FCC Stack	M5

RUN NO.	OPERATOR	AMB. TEMP (°F)	BAR. PRESS. (IN. Hg)	STATIC PRESS. (IN. H_2O)	FILTER NUMBER(S)	STACK INSIDE DIMEN. (INCHES)	PITOT TUBE Cp	THERM NO.	PAGE
4DM5320	Phillips	75	29.92	-1.38	34502119	198	0.84		10 of

Imp#104

PROBE LENGTH AND TYPE	NOZZLE I.D.	NOZZLE NO.	H_2O (%)	SAMPLE BOX NO.	METER BOX NO.	METER Δ H @	METER CAL. FACTOR Y	LEAK CHECK IN. Hg	LEAK CHECK CFM	K FACTOR	C FACTOR	PROBE HEAT SET	BOX HEAT SET	REF. ΔP	RECORD DATA MINS
Vafitt Glass	.227		12		FB2	1.73	0.986	10	0.00			320	320		10

Pretest leak check 15 in Hg 0.00 cfm

Pitot ± ✓

TRAVERSE POINT NUMBER	SAMPLING TIME, min	CLOCK TIME (24 hr CLOCK)	GAS METER READING (V_m), ft^3	VELOCITY HEAD (Δp_s), in. H_2O	ORIFICE PRESSURE DIFFERENTIAL (ΔH), in. H_2O DESIRED	ACTUAL	STACK TEMPERATURE (T_s), °F	DRY GAS METER TEMPERATURE INLET ($T_{m_{in}}$), °F	OUTLET ($T_{m_{out}}$), °F	PUMP VACUUM, in. Hg	SAMPLE BOX TEMPERATURE °F P	F	IMPINGER TEMPERATURE °F
	0	1134	894.301										
Port D	10	1144	904.160	2.4	3.1	3.1	423	74	76	7.7	318	302	76
	20	1154	914.190	2.4	3.2	3.2	420	79	78	8.0	331	337	74
	30	1204	924.150	2.4	3.2	3.2	419	84	79	8.2	326	310	74
	40	1214	934.330	2.4	3.2	3.2	418	87	81	8.2	323	325	74
	50	1224	944.390	2.4	3.2	3.2	416	89	81	8.4	325	312	86
	60	1234	954.550	2.4	3.2	3.2	417	90	82	8.4	321	305	96
	70	1244	964.640	2.4	3.2	3.2	417	90	82	8.5	321	330	88
	80	1254	974.630	2.4	3.2	3.2	417	90	83	8.5	318	314	80
	90	1304	984.720	2.4	3.2	3.2	417	90	84	8.5	319	311	82
	100	1314	994.780	2.4	3.2	3.2	416	90	84	9.0	317	322	70
	110	1324	[illegible]04.810	2.4	3.2	3.2	418	90	84	9.0	317	314	78
	120	1334	[illegible]14.905	2.4	3.2	3.2	417	90	86	9.5	32[illegible]	316	84

Imp#104

QUAD TRAIN SAMPLE RECOVERY AND INTEGRITY SHEET

Plant Phillips Sample date 11/11/82
Sample location Unit 27.1 Outlet Recovery date 11/11/82
Run number 4A M5 450 Recovered by
Particulate sample type ____ M5 ____ M5-320 ✓ M5-450 ____ M5W
Particulate filter number 3450 222 ✓
Particulate filter sample I.D. 4081 B ✓
Probe rinse Acetone I.D. 4081 A ✓
Purge train 20 min (check when completed)
Location of filter in back half 1st & 2nd Imp.

MOISTURE

	1st impinger	2nd impinger	3rd impinger	4th impinger	Silica gel
Final wt	525.7 g	698.1 g	667.0 g	____ g	958.2 g
Initial wt	~~690.9~~ 672.0 g	~~615.0~~ 604.4 g	~~580.4~~ 582.6 g	____ g	~~851.1~~ 849.6 g
Net wt	-146.3 g	93.7 g	84.4 g	— g	108.6 g

Total moisture 140.4 g 80 % spent

RECOVERED SAMPLE

PROBE RINSE CONTAINER I.D. 4081.A ✓
IPA IMP. CONTAINER I.D. 4082 A ✓ LIQUID LEVEL MARKED ____
H_2O_2 IMP. CONTAINER I.D. 4083 A ✓ LIQUID LEVEL MARKED ____
BLANK CONTAINER(S) I.D. LIQUID LEVEL MARKED

IPA [redacted] ✓ ✓
H_2O_2 [redacted] ✓ ✓
H_2O [redacted] ✓ ✓
Acetone [redacted] ✓ ✓

Samples stored and locked
Remarks

LABORATORY CUSTODY

Received by Donna White Date 11/18/82
Remarks Reg. # 03882

QUAD TRAIN SAMPLE RECOVERY AND INTEGRITY SHEET

Plant Phillips Sample date 11/11/82
Sample location Unit 27.1 Outlet Recovery date 11/11/82
Run number 4B M5 450 Recovered by PC & DS
Particulate sample type ____ M5 ____ M5-320 ✓ M5-450 ____ M5W
Particulate filter number 3450 221 ✓
Particulate filter sample I.D. 4084B ✓
Probe rinse Acetone I.D. 4084A
Purge train 20 min (check when completed) ✓
Location of filter in back half 1st & 2nd Imp.

MOISTURE

	1st impinger	2nd impinger	3rd impinger	4th impinger	Silica gel
Final wt	585.0 g	721.4 g	675.0 g	____ g	908.0 g
Initial wt	666.5 g	594.1 g	605.1 g	____ g	828.3 g
Net wt	−81.5 g	124.3 g	69.9 g	— g	79.7 g

Total moisture 192.4 g 85 % spent

RECOVERED SAMPLE

PROBE RINSE CONTAINER I.D. 4084A
IPA IMP. CONTAINER I.D. 4085A ✓ LIQUID LEVEL MARKED ____
H_2O_2 IMP. CONTAINER I.D. 4086A ✓ LIQUID LEVEL MARKED ____
BLANK CONTAINER(S) I.D. LIQUID LEVEL MARKED

IPA	4040A ✓	✓
H_2O_2	4039A ✓	✓
H_2O	4041A ✓	✓
Acetone	4042A ✓	✓

Samples stored and locked ____
Remarks ____

LABORATORY CUSTODY

Received by Glenna White Date 11/18/82
Remarks reg # 03882

QUAD TRAIN SAMPLE RECOVERY AND INTEGRITY SHEET

Plant Phillips Sample date 11/11/82
Sample location Unit 271 Cooler Recovery date 11/11/82
Run number 4C M5 B Recovered by
Particulate sample type ____ M5 ✓ M5-320 ____ M5-450 ____ M5W
Particulate filter number 3450223 ✓
Particulate filter sample I.D. 4087 B ✓
Probe rinse Acetone I.D. 4087A
Purge train 20 min (check when completed) ✓
Location of filter in back half Pt 92 Imp.

MOISTURE

	1st impinger	2nd impinger	3rd impinger	4th impinger	Silica gel
Final wt	767.8 g	696.1 g	623.3 g	____ g	900.2 g
Initial wt	658.7 g	603.2 g	602.7 g	____ g	821.2 g
Net wt	109.1 g	92.9 g	20.6 g	— g	79.0 g

Total moisture 301.6 g 85 % spent

RECOVERED SAMPLE

PROBE RINSE CONTAINER I.D. 4087A
IPA IMP. CONTAINER I.D. 4088A ✓ LIQUID LEVEL MARKED
H_2O_2 IMP. CONTAINER I.D. 4089A ✓ LIQUID LEVEL MARKED
BLANK CONTAINER(S) I.D. LIQUID LEVEL MARKED

IPA 4040A ✓ ✓
H_2O_2 4039A ✓ ✓
H_2O 4041A ✓ ✓
Acetone 4042A ✓ ✓

Samples stored and locked
Remarks Asbestos fibers in Acetone Rinse. DB

LABORATORY CUSTODY

Received by Gloria Dhute Date 11/18/82
Remarks Reg # 03882

QUAD TRAIN SAMPLE RECOVERY AND INTEGRITY SHEET

Plant Phillips Sample date 11/11/82
Sample location UNIT 27.1 OUTLET Recovery date 11/11/82
Run number 4D M5B Recovered by PC & DS
Particulate sample type ____ M5 ✓ M5-320 ____ M5-450 ____ M5W
Particulate filter number 3450 219 ✓
Particulate filter sample I.D. 4091 B ✓
Probe rinse Acetone I.D. 4091 A ✓
Purge train 20 min (check when completed) ✓
Location of filter in back half 1st & 2nd Imp.

MOISTURE

	1st impinger	2nd impinger	3rd impinger	4th impinger	Silica gel
Final wt	819.8 g	699.0 g	636.9 g	____ g	927.5 g
Initial wt	671.9 g	613.4 g	612.1 g	____ g	842.7 g
Net wt	147.9 g	85.6 g	24.8 g	— g	79.8 g

Total moisture 338.1 g 80 % spent

RECOVERED SAMPLE

PROBE RINSE CONTAINER I.D. 4091 A ✓
IPA IMP. CONTAINER I.D. 4092 A ✓ LIQUID LEVEL MARKED ____
H_2O_2 IMP. CONTAINER I.D. 4093 A ✓ LIQUID LEVEL MARKED ____
BLANK CONTAINER(S) I.D. LIQUID LEVEL MARKED

IPA 4040 A ✓ ✓
H_2O_2 4039 A ✓ ✓
H_2O 4041 A ✓ ✓
Acetone 4042 A ✓ ✓

Samples stored and locked ____
Remarks ____

LABORATORY CUSTODY

Received by Lorne White Date 11/18/82
Remarks reg. # 03882

DRY MOLECULAR WEIGHT DETERMINATION

PLANT Phillips
DATE 11/11/82 TEST NO 4
SAMPLING TIME (24-hr CLOCK)
SAMPLING LOCATION unit 27.1 - outlet
SAMPLE TYPE (BAG, INTEGRATED, CONTINUOUS) Int. Bag
ANALYTICAL METHOD orsat
AMBIENT TEMPERATURE
OPERATOR DAC
ORSAT LEAK CHECKED ✓

COMMENTS:

RUN / GAS	1		2		3		AVERAGE NET VOLUME	MULTIPLIER	MOLECULAR WEIGHT OF STACK GAS (DRY BASIS) M_d, lb/lb-mole
	ACTUAL READING	NET	ACTUAL READING	NET	ACTUAL READING	NET			
CO_2	14.5	14.5	14.2	14.2			14.35	44/100	
O_2 (NET IS ACTUAL O_2 READING MINUS ACTUAL CO_2 READING)	16.2	1.7	16.3	2.1			1.9	32/100	
CO (NET IS ACTUAL CO READING MINUS ACTUAL O_2 READING)								28/100	
N_2 (NET IS 100 MINUS ACTUAL CO READING)								28/100	
								TOTAL	

EMISSION TESTING FIELD DATA

PLANT & CITY	DATE	SAMPLING LOCATION	SAMPLE TYPE
PHILLIPS SWEENY	11/11/82	FCC STACK	MS

RUN NO.	OPERATOR	AMB. TEMP (°F)	BAR. PRESS. (IN. Hg)	STATIC PRESS. (IN. H_2O)	FILTER NUMBER(S)	STACK INSIDE DIMEN. (INCHES)	PITOT TUBE Cp	THERM NO.	PAGE
SAMS	DD	80	28.71	-.138	345907	105	.99		1 OF 1

PROBE LENGTH AND TYPE	NOZZLE I.D.	NOZZLE NO.	H_2O (%)	SAMPLE BOX NO.	METER BOX NO.	METER ΔH@	METER CAL. FACTOR Y	LEAK CHECK IN. Hg	LEAK CHECK CFM	K FACTOR	C FACTOR	PROBE HEAT SET	BOX HEAT SET	REF. ΔP	RECORD DATA MINS
6' GLASS	.222		10		3200	1.006	1.05	.006				250	250		10

TRAVERSE POINT NUMBER	SAMPLING TIME, min	CLOCK TIME (24 hr CLOCK)	GAS METER READING (V_m), ft^3	VELOCITY HEAD (Δp_s), in. H_2O	ORIFICE PRESSURE DIFFERENTIAL (ΔH), in. H_2O DESIRED	ORIFICE PRESSURE DIFFERENTIAL (ΔH), in. H_2O ACTUAL	STACK TEMPERATURE (T_s), °F	DRY GAS METER TEMPERATURE INLET ($T_{m_{in}}$), °F	DRY GAS METER TEMPERATURE OUTLET ($T_{m_{out}}$), °F	PUMP VACUUM, in. Hg	SAMPLE BOX TEMPERATURE °F P	SAMPLE BOX TEMPERATURE °F F	IMPINGER TEMPERATURE °F
	0	1532	608.891										
	10.		617.54	1.9	2.91	2.91	413	80	80	5.6	242	234	
	20.		626.36	1.9	2.90	2.90	413	83	80	6.1	249	254	89
	30.		634.78	1.9	2.93	2.93	413	85	80	6.3	246	244	111
	40.		643.44	1.9	2.94	2.94	413	87	80	6.5	246	248	121
	50.		652.05	1.9	2.94	2.94	413	89	80	6.5	246	248	105
	60.		660.67	1.9	2.94	2.94	413	90	80	7.5	245	257	97
	70.		669.14	1.85	2.86	2.86	412	89	80	7.6	244	243	92
	80.		677.43	1.9	2.94	2.94	413	89	80	7.8	246	246	89
	90.	1702	685.937	1.85	2.86	2.86	413	89	80	8.0	246	246	85
	100.												
	110.												
	120.												

[redacted]SS[redacted] TE[redacted]NG [redacted]ELD [redacted]TA

PLANT & CITY	DATE	SAMPLING LOCATION	SAMPLE TYPE
PHILLIPS SWEENEY	1/1/1/84	FCC STACK	HS

RUN NO.	OPERATOR	AMB. TEMP (°F)	BAR. PRESS. (IN. Hg)	STATIC PRESS. (IN. H_2O)	FILTER NUMBER(S)	STACK INSIDE DIMEN. (INCHES)	PITOT TUBE Cp	THERM NO.	PAGE
1	[illegible]	80	29.81	-1.38	345 91 06	105	[illegible]		1 of 1

PROBE LENGTH AND TYPE	NOZZLE I.D.	NOZZLE NO.	H_2O (%)	SAMPLE BOX NO.	METER BOX NO.	METER ΔH@	METER CAL. FACTOR Y	LEAK CHECK IN. Hg	LEAK CHECK CFM	K FACTOR	C FACTOR	PROBE HEAT SET	BOX HEAT SET	REF. ΔP	RECORD DATA MINS
6' GLASS	.244		80		185	~~[illegible]~~ 1.95	9.8	1.25	.014			250	250		10

TRAVERSE POINT NUMBER	SAMPLING TIME, min	CLOCK TIME (24 hr CLOCK)	GAS METER READING (V_m), ft^3	VELOCITY HEAD (Δp_s), in. H_2O	ORIFICE PRESSURE DIFFERENTIAL (ΔH), in. H_2O DESIRED	ORIFICE PRESSURE DIFFERENTIAL (ΔH), in. H_2O ACTUAL	STACK TEMPERATURE (T_s), °F	DRY GAS METER TEMPERATURE INLET ($T_{m_{in}}$), °F	DRY GAS METER TEMPERATURE OUTLET ($T_{m_{out}}$), °F	PUMP VACUUM, in. Hg	SAMPLE BOX TEMPERATURE °F P	SAMPLE BOX TEMPERATURE °F F	IMPINGER TEMPERATURE °F
	0	1533	251.397										
	10.		260.66	1.9	2.91	2.91	413	85	84	10.1	252	231	
	20.		270.15	1.9	2.90	2.90	413	91	83	9.9	266	247	83
	30.		279.50	1.9	2.93	2.93	413	94	84	9.7	252	248	115
	40.		288.67	1.9	2.94	2.94	413	94	85	9.8	252	248	122
	50.		297.31	1.9	2.94	2.94	413	94	85	10.3	252	246	105
	60.		306.96	1.9	2.94	2.94	413	97	85	10.7	252	250	94
	70.		316.07	1.85	2.86	2.86	412	97	86	10.8	251	250	90
	80.		325.29	1.9	2.94	2.94	413	97	86	11.2	252	246	90
	90.	1703	334.459	1.85	2.86	2.86	413	97	86	11.2	252	249	90
	100.												
	110.												
	120.												

EMISSION TESTING FIELD DATA

PLANT & CITY	DATE	SAMPLING LOCATION	SAMPLE TYPE
Phillips Pasadena	1/1/82	FCC Stack	M5

RUN NO.	OPERATOR	AMB. TEMP (°F)	BAR. PRESS. (in. Hg)	STATIC PRESS. (in. H_2O)	FILTER NUMBER(S)	STACK INSIDE DIMEN. (inches)	PITOT TUBE Cp	THERM NO.	PAGE
5CM5W1	Phillips	83	29.81	-1.38	134510/1045	108	0.84		0 F 1

TC# 147 7
Pitot # 278
DR# 124
Imp # 285

PROBE LENGTH AND TYPE	NOZZLE I.D.	NOZZLE NO.	H_2O, (%)	SAMPLE BOX NO.	METER BOX NO.	METER ΔH@	METER CAL. FACTOR Y	LEAK CHECK in. Hg	LEAK CHECK CFM	K FACTOR	C FACTOR	PROBE HEAT SET	BOX HEAT SET	REF. ΔP	RECORD DATA MINS
6 Ft Glass	.234		12		FB7	1.71	1.010	7.0	0.015			250	250		0

Pretest Leak Check 17 in Hg 0.01 cfm

TRAVERSE POINT NUMBER	SAMPLING TIME, min	CLOCK TIME (24 hr CLOCK)	GAS METER READING (V_m), ft^3	VELOCITY HEAD (Δp_s), in. H_2O	ORIFICE PRESSURE DIFFERENTIAL (ΔH), in. H_2O DESIRED	ORIFICE PRESSURE DIFFERENTIAL (ΔH), in. H_2O ACTUAL	STACK TEMPERATURE (T_s), °F	DRY GAS METER TEMPERATURE INLET ($T_{m_{in}}$), °F	DRY GAS METER TEMPERATURE OUTLET ($T_{m_{out}}$), °F	PUMP VACUUM, in. Hg	SAMPLE BOX TEMPERATURE °F P	SAMPLE BOX TEMPERATURE °F F	IMPINGER TEMPERATURE °F
	0	1532	61.824										
Port C	10.	1542	71.940	2.4	3.2	3.2	416	86	84	6.5	248	244	78
	20.	1552	81.920	2.4	3.2	3.2	416	86	84	5.5	258	268	76
	30.	1602	91.950	2.4	3.2	3.2	416	89	83	5.5	255	258	86
	40.	1612	102.020	2.4	3.2	3.2	416	91	83	5.5	254	257	94
	50.	1622	112.050	2.4	3.2	3.2	416	92	84	5.5	254	256	80
	60.	1632	122.110	2.4	3.2	3.2	416	94	85	5.5	254	245	96
	70.	1642	132.190	2.4	3.2	3.2	415	94	86	5.5	252	257	106
	80.	1652	142.280	2.4	3.2	3.2	415	94	85	5.5	252	257	98
	90.	1702	152.292	2.4	3.2	3.2	415	94	85	5.5	252	255	86
	100.												
	110.												
	120.												

EMISSION TESTING FIELD DATA

PLANT & CITY	DATE	SAMPLING LOCATION	SAMPLE TYPE
Phillipsburg Refining Company	11/11/82	FCCU Outlet	M5

RUN NO.	OPERATOR	AMB. TEMP (°F)	BAR. PRESS. (IN. Hg)	STATIC PRESS. (IN. H_2O)	FILTER NUMBER(S)	STACK INSIDE DIMEN. (INCHES)	PITOT TUBE Cp	THERM NO.	PAGE
5DM5M	Phillipps	83	29.81	-1.38	B1450/104	108	0.84		1 of 1

Imp #104

PROBE LENGTH AND TYPE	NOZZLE I.D.	NOZZLE NO.	H_2O (%)	SAMPLE BOX NO.	METER BOX NO.	METER ΔH@	METER CAL. FACTOR Y	LEAK CHECK IN. Hg	LEAK CHECK CFM	K FACTOR	C FACTOR	PROBE HEAT SET	BOX HEAT SET	REF. ΔP	RECORD DATA MINS
Kanfit Glass	2.246		2		FB2	1.73	0.9886	8.9999				250	250		10

Pretest Leak Check 15 in Hg 0.005 cfm

Pitot ± ✓

TRAVERSE POINT NUMBER	SAMPLING TIME, min	CLOCK TIME (24 hr CLOCK)	GAS METER READING (V_m), ft^3	VELOCITY HEAD (Δp_s), in. H_2O	ORIFICE PRESSURE DIFFERENTIAL (ΔH), in. H_2O DESIRED	ORIFICE PRESSURE DIFFERENTIAL (ΔH), in. H_2O ACTUAL	STACK TEMPERATURE (T_s), °F	DRY GAS METER TEMPERATURE INLET ($T_{m_{in}}$), °F	DRY GAS METER TEMPERATURE OUTLET ($T_{m_{out}}$), °F	PUMP VACUUM, in. Hg	SAMPLE BOX TEMPERATURE °F P	SAMPLE BOX TEMPERATURE °F F	IMPINGER TEMPERATURE °F
	0	1534	15.226										
Port D	10	1544	25.340	2.4	3.2	3.2	416	78	80	7.0	274	257	78
	20	1554	35.290	2.4	3.2	3.2	416	80	80	6.5	253	275	66
	30	1604	45.260	2.4	3.2	3.2	416	84	80	6.0	257	247	70
	40	1614	55.300	2.4	3.2	3.2	416	86	80	6.2	255	267	74
	50	1624	65.370	2.4	3.2	3.2	416	81	82	6.2	256	246	74
	60	1634	75.470	2.4	3.2	3.2	416	90	82	6.2	256	262	78
	70	1644	85.710	2.4	3.2	3.2	415	90	83	6.4	257	255	84
	80	1654	95.900	2.4	3.2	3.2	415	90	83	6.4	258	247	84
	90	1704	105.882	2.4	3.2	3.2	415	90	83	6.4	256	270	76
	100												
	110												
	120												

QUAD TRAIN SAMPLE RECOVERY AND INTEGRITY SHEET

Plant Philips Sample date 11/11/82
Sample location Unit 27.1 outlet Recovery date 11/12/82
Run number 5A M5 Recovered by PC-DS
Particulate sample type ✓ M5 ____ M5-320 ____ M5-450 ____ M5W
Particulate filter number 3450107 ✓
Particulate filter sample I.D. 4094B ✓
Probe rinse Acetone I.D. 4094A ✓
Purge train 20 min (check when completed) ____
Location of filter in back half 1st & 2nd

MOISTURE

	1st impinger	2nd impinger	3rd impinger	4th impinger	Silica gel
Final wt	673 g	687.2 g	595.2 g	____ g	922.9 g
Initial wt	~~672.0~~ 690.9 g	~~604.4~~ 615.0 g	~~582.6~~ 580.6 g	____ g	~~849.6~~ 851.1 g
Net wt	-17.9 g	72.2 g	14.6 g	— g	71.8 g

Total moisture 140.7 g 85 % spent

RECOVERED SAMPLE

PROBE RINSE CONTAINER I.D. 4094A ✓
IPA IMP. CONTAINER I.D. 4095A ✓ LIQUID LEVEL MARKED ____
H_2O_2 IMP. CONTAINER I.D. 4096A ✓ LIQUID LEVEL MARKED ____
BLANK CONTAINER(S) I.D. LIQUID LEVEL MARKED

IPA	4040A ✓	✓
H_2O_2	4039A ✓	✓
H_2O	4041A ✓	✓
Acetone	4042A ✓	✓

Samples stored and locked ____
Remarks ____

LABORATORY CUSTODY

Received by Gloria White Date 11/18/82
Remarks reg. # 03882

QUAD TRAIN SAMPLE RECOVERY AND INTEGRITY SHEET

Plant Phillips Sample date 11/11/82
Sample location unit 27.1 - outlet Recovery date 11/12/82
Run number 5B M5 Recovered by PC&DS
Particulate sample type ✓ M5 ____ M5-320 ____ M5-450 ____ M5W
Particulate filter number 3450 106 ✓
Particulate filter sample I.D. 4097B ✓
Probe rinse Acetone I.D. 4097A ✓
Purge train 20 min (check when completed) ✓
Location of filter in back half Exit 1/82

MOISTURE

	1st impinger	2nd impinger	3rd impinger	4th impinger	Silica gel
Final wt	593.4 g	695.3 g	637.7 g	____ g	932.8 g
Initial wt	680.7 g	593.5 g	598.6 g	____ g	850.4 g
Net wt	-87.3 g	101.8 g	39.1 g	— g	82.4 g

Total moisture 136.0 g 80 % spent

RECOVERED SAMPLE

PROBE RINSE CONTAINER I.D. 4097A ✓
IPA IMP. CONTAINER I.D. 4098A ✓ LIQUID LEVEL MARKED ✓
H_2O_2 IMP. CONTAINER I.D. 4099A ✓ LIQUID LEVEL MARKED ✓
BLANK CONTAINER(S) I.D. LIQUID LEVEL MARKED

IPA 4040A ✓ ✓
H_2O_2 4039A ✓ ✓
H_2O 4041A ✓
Acetone 4042D ✓

Samples stored and locked ____
Remarks ____

LABORATORY CUSTODY

Received by Gloria White Date 11/18/82
Remarks reg. # 03882

QUAD TRAIN SAMPLE RECOVERY AND INTEGRITY SHEET

Plant Phillips Sample date 11/11/82
Sample location Unit 27.1 - outlet Recovery date 11/12/82
Run number 5CM5W Recovered by PC&DS
Particulate sample type ____ M5 ____ M5-320 ____ M5-450 ✓ M5W
Particulate filter number 3450 105 ✓
Particulate filter sample I.D. 4100B ✓
Probe rinse Water I.D. 4100A ✓
Purge train 20 min (check when completed) ✓
Location of filter in back half 182

MOISTURE

	1st impinger	2nd impinger	3rd impinger	4th impinger	Silica gel
Final wt	784.0 g	701.0 g	606.5 g	____ g	950.7 g
Initial wt	693.3 g	634.3 g	566.3 g	____ g	859.5 g
Net wt	90.7 g	66.7 g	40.2 g	— g	91.2 g

Total moisture 288.8 g 85 % spent

RECOVERED SAMPLE

PROBE RINSE CONTAINER I.D. 4100A ✓
IPA IMP. CONTAINER I.D. 4101A ✓ LIQUID LEVEL MARKED ✓
H_2O_2 IMP. CONTAINER I.D. 4102A ✓ LIQUID LEVEL MARKED ✓
BLANK CONTAINER(S) I.D. LIQUID LEVEL MARKED

IPA 4010A ✓ ✓
H_2O_2 4039A ✓ ✓
H_2O 4041A ✓ ✓
Acetone 4042A N/A ✓

Samples stored and locked ____
Remarks ____

LABORATORY CUSTODY

Received by Lonnie White Date 11/18/82
Remarks reg. #03882

QUAD TRAIN SAMPLE RECOVERY AND INTEGRITY SHEET

Plant Phillips Sample date 11/11/82
Sample location unit 27.1 - outlet Recovery date 11/12/82
Run number 5D M5W Recovered by DS&PC
Particulate sample type ____ M5 ____ M5-320 ____ M5-450 ✓ M5W
Particulate filter number 3450 104 ✓
Particulate filter sample I.D. 4103 B ✓
Probe rinse H_2O I.D. 4103A ✓
Purge train 20 min (check when completed) ✓
Location of filter in back half 1 & 2

MOISTURE

	1st impinger	2nd impinger	3rd impinger	4th impinger	Silica gel
Final wt	752.9 g	672.8 g	635.4 g	____ g	942.9 g
Initial wt	651.5 g	603.1 g	591.8 g	____ g	855.7 g
Net wt	101.4 g	69.7 g	43.6 g	— g	87.2 g

Total moisture 301.9 g 85 % spent

RECOVERED SAMPLE

PROBE RINSE CONTAINER I.D. ~~4101~~ 4103A ✓
IPA IMP. CONTAINER I.D. 4104A ✓ LIQUID LEVEL MARKED ✓
H_2O_2 IMP. CONTAINER I.D. 4105A ✓ LIQUID LEVEL MARKED ✓
BLANK CONTAINER(S) I.D. LIQUID LEVEL MARKED

IPA	4040A ✓	✓
H_2O_2	4039A ✓	✓
H_2O	4041A ✓	✓
Acetone	4042A N/A	✓

Samples stored and locked ____
Remarks ____

LABORATORY CUSTODY

Received by Glenis White Date 11/18/82
Remarks Reg. #03882

DRY MOLECULAR WEIGHT DETERMINATION

PLANT Phillips
DATE 11/11/82 TEST NO 5
SAMPLING TIME (24-hr CLOCK)
SAMPLING LOCATION Unit 27.1 - outlet
SAMPLE TYPE (BAG, INTEGRATED, CONTINUOUS) Int. Bag
ANALYTICAL METHOD ORSAT
AMBIENT TEMPERATURE
OPERATOR [illegible]
ORSAT LEAK CHECKED ✓

COMMENTS:

GAS \ RUN	1		2		3		AVERAGE NET VOLUME	MULTIPLIER	MOLECULAR WEIGHT OF STACK GAS (DRY BASIS) M_d, lb/lb-mole
	ACTUAL READING	NET	ACTUAL READING	NET	ACTUAL READING	NET			
CO_2	14.7	14.7	14.5	14.5			14.6	44/100	
O_2 (NET IS ACTUAL O_2 READING MINUS ACTUAL CO_2 READING)	16.7	2.0	16.4	1.9			1.95	32/100	
CO (NET IS ACTUAL CO READING MINUS ACTUAL O_2 READING)								28/100	
N_2 (NET IS 100 MINUS ACTUAL CO READING)								28/100	
								TOTAL	

[redacted]SSI[redacted] TES[redacted]NG [redacted]LD [redacted]TA

PLANT & CITY	DATE	SAMPLING LOCATION	SAMPLE TYPE
PHILLIPS SWEENY	1/1/12/P2	FCC STACK	MS-452

RUN NO.	OPERATOR	AMB. TEMP (°F)	BAR. PRESS. (in. Hg)	STATIC PRESS. (in. H_2O)	FILTER NUMBER(S)	STACK INSIDE DIMEN. (INCHES)	PITOT TUBE Cp	THERM NO.	PAGE
6A MS45	DU	75	30.02	-1.38	3450226	108	.84		1 OF 1

PROBE LENGTH AND TYPE	NOZZLE I.D.	NOZZLE NO.	H_2O (%)	SAMPLE BOX NO.	METER BOX NO.	METER ΔH@	METER CAL. FACTOR Y	LEAK CHECK in. Hg	LEAK CHECK CFM	K FACTOR	C FACTOR	PROBE HEAT SET	BOX HEAT SET	REF. ΔP	RECORD DATA MINS
6' GLASS	.419		8.0		3200	1.906	1.20	.004				450	452		10

Stop @ 1110 - Train 3 - high vac. restart @ 1143

7 8 9 10	11 12 13 14	15 16 17 18	19 20 21 22 23 24	25 26 27 28 29	30 31 32 33 34 35	36 37	38 39 40 41	42 43 44	45 46 47	48 49 50 51	52 53 54	55 56 57
TRAVERSE POINT NUMBER	SAMPLING TIME, min	CLOCK TIME (24 hr CLOCK)	GAS METER READING (V_m), ft^3	VELOCITY HEAD (Δp_s), in. H_2O	ORIFICE PRESSURE DIFFERENTIAL (ΔH), in. H_2O DESIRED	ORIFICE PRESSURE DIFFERENTIAL (ΔH), in. H_2O ACTUAL	STACK TEMPERATURE (T_s), °F	DRY GAS METER TEMPERATURE INLET ($T_{m_{in}}$), °F	DRY GAS METER TEMPERATURE OUTLET ($T_{m_{out}}$), °F	PUMP VACUUM, in. Hg	SAMPLE BOX TEMPERATURE °F P	SAMPLE BOX TEMPERATURE °F F	IMPINGER TEMPERATURE °F
	0	1107	685.934										
	10.		694.36	1.95	2.92	2.92	419	74	72	10.3	463	445	
	20.		702.95	1.9	2.88	2.88	419	85	77	10.0	467	457	
	30.		711.58	1.9	2.90	2.90	419	89	80	9.6	451	399	
	40.		720.20	1.9	2.91	2.91	419	91	81	9.2	459	425	
	50.		728.62	1.95	3.00	3.00	419	94	81	9.0	457	409	126
	60.		737.07	1.95	3.01	3.01	419	97	81	8.9	457	370	95
	70.		745.61	1.95	3.03	3.03	419	97	81	9.7	481	372	89
	80.		754.13	1.95	3.04	3.04	419	98	82	10.0	481	346	
	90.		762.59	1.9	2.96	2.96	419	96	83	10.3	487	382	
	100.		771.10	1.95	3.03	3.03	419	95	83	11.1	488	397	92
	110.		779.62	1.95	3.00	3.00	419	95	83	11.2	486	408	
	120.	1340	787.942	1.9	2.95	2.95	419	95	84	11.3	490	410	99
	.		.	.	.	.				.			
	.		.	.	.	.				.			
	.		.	.	.	.				.			
	.		.	.	.	.				.			
	.		.	.	.	.				.			
	.		.	.	.	.				.			
	.		.	.	.	.				.			
	.		.	.	.	.				.			
	.		.	.	.	.				.			
	.		.	.	.	.				.			
	.		.	.	.	.				.			
	.		.	.	.	.				.			
	.		.	.	.	.				.			

EMISSION TESTING FIELD DATA

PLANT & CITY	DATE	SAMPLING LOCATION	SAMPLE TYPE
PHILLIPS SUGEN	11/12/92	FCC STACK	M5-450

RUN NO.	OPERATOR	AMB. TEMP (°F)	BAR. PRESS. (IN. Hg)	STATIC PRESS. (IN. H_2O)	FILTER NUMBER(S)	STACK INSIDE DIMEN. (INCHES)	PITOT TUBE Cp	THERM NO.	PAGE
6BA545	RO	75	30.02	-1.38	34592 16	108	.84		1 OF 1

PROBE LENGTH AND TYPE	NOZZLE I.D.	NOZZLE NO.	H_2O (%)	SAMPLE BOX NO.	METER BOX NO.	METER ΔH@	METER CAL. FACTOR Y	LEAK CHECK IN. Hg	LEAK CHECK CFM	K FACTOR	C FACTOR	PROBE HEAT SET	BOX HEAT SET	REF. ΔP	RECORD DATA MINS
6' GLASS	.223		8.0		FB5	1.950	9.E-1	10	0.16			450	450		10

down @ 1145 - high vac - changed sampleheads 343.211 → 343.455 restart @ 1153

7 8 9 10	11 12 13 14	15 16 17 18	19 20 21 22 23 24	25 26 27 28 29	30 31 32 33 34 35	36 37	38 39 40 41	42 43 44	45 46 47	48 49 50 51	52 53 54	55 56 57
TRAVERSE POINT NUMBER	SAMPLING TIME, min	CLOCK TIME (24 hr CLOCK)	GAS METER READING (V), ft^3	VELOCITY HEAD (Δp_s), in. H_2O	ORIFICE PRESSURE DIFFERENTIAL (ΔH), in. H_2O DESIRED	ORIFICE PRESSURE DIFFERENTIAL (ΔH), in. H_2O ACTUAL	STACK TEMPERATURE (T_s), °F	DRY GAS METER TEMPERATURE INLET ($T_{m_{in}}$), °F	DRY GAS METER TEMPERATURE OUTLET ($T_{m_{out}}$), °F	PUMP VACUUM, in. Hg	SAMPLE BOX TEMPERATURE °F P	SAMPLE BOX TEMPERATURE °F F	IMPINGER TEMPERATURE °F
	0	1147	339.140										
	10.		348.46	1.95	2.92	2.92	419	82	81	17.2	468	379	
	20.		357.80	1.9	2.90	2.90	419	90	83	6.5	465	391	
	30.		366.91	1.9	2.91	2.91	419	94	84	6.2	476	367	
	40.		376.18	1.95	3.00	3.00	419	100	86	6.6	495	407	126
	50.		385.45	1.95	3.01	3.01	419	105	89	6.7	496	430	112
	60.		394.85	1.95	3.03	3.03	419	108	91	6.9	497	444	108
	70.		404.38	1.95	3.04	3.04	419	109	94	7.2	494	439	
	80.		413.80	1.9	2.96	2.96	419	108	95	7.2	496	◆431	
	90.		423.34	1.95	3.03	3.03	419	107	95	7.2	495	417	116
	100.		432.81	1.95	3.00	3.00	419	107	95	7.3	494	412	
	110.		442.18	1.9	2.95	2.95	419	105	94	7.5	498	414	116
	120.	1249	451.520	1.9	2.95	2.95	419	105	93	7.8	499	410	
	.		.	.	.	.				.			
	.		.	.	.	.				.			
	.		.	.	.	.				.			
	.		.	.	.	.				.			
	.		.	.	.	.				.			
	.		.	.	.	.				.			
	.		.	.	.	.				.			
	.		.	.	.	.				.			
	.		.	.	.	.				.			
	.		.	.	.	.				.			
	.		.	.	.	.				.			
	.		.	.	.	.				.			

EMISSION TESTING FIELD DATA

PLANT & CITY	DATE	SAMPLING LOCATION	SAMPLE TYPE
Phillips Petroleum Sweeny	11/12/82	FCCU Stack	M5

RUN NO.	OPERATOR	AMB. TEMP (°F)	BAR. PRESS. (IN. Hg)	STATIC PRESS. (IN. H_2O)	FILTER NUMBER(S)	STACK INSIDE DIMEN. (INCHES)	PITOT TUBE Cp	THERM NO.	PAGE
6 of 5	Phillips	70	30.02	-1.38	345022-27	108	0.84		1 of 1

TC #247
Pitot #278
DR #124
Imp #285

PROBE LENGTH AND TYPE	NOZZLE I.D.	NOZZLE NO.	H_2O (%)	SAMPLE BOX NO.	METER BOX NO.	METER Δ H @	METER CAL. FACTOR Y	LEAK CHECK IN. Hg	LEAK CHECK CFM	K FACTOR	C FACTOR	PROBE HEAT SET	BOX HEAT SET	REF. ΔP	RECORD DATA MINS
6 ft Glass	.224		12		FD7	1.71	1.001	9	0.00			321	349		10

Pretest Leak Check 16 in Hg 0.00 cfm

TRAVERSE POINT NUMBER	SAMPLING TIME, min	CLOCK TIME (24 hr CLOCK)	GAS METER READING (V_m), ft^3	VELOCITY HEAD (Δp_s), in. H_2O	ORIFICE PRESSURE DIFFERENTIAL (ΔH), in. H_2O DESIRED	ORIFICE PRESSURE DIFFERENTIAL (ΔH), in. H_2O ACTUAL	STACK TEMPERATURE (T_s), °F	DRY GAS METER TEMPERATURE INLET ($T_{m_{in}}$), °F	DRY GAS METER TEMPERATURE OUTLET ($T_{m_{out}}$), °F	PUMP VACUUM, in. Hg	SAMPLE BOX TEMPERATURE °F P	SAMPLE BOX TEMPERATURE °F F	IMPINGER TEMPERATURE °F
	0	1108	152.538										
Pt C	10.	1146	162.100	2.4	3.1	3.1	419	76	74	5.8	314	317	80
	20.	1156	171.810	2.3	3.0	3.0	419	76	74	5.5	324	319	84
	30.	1206	181.670	2.4	3.1	3.1	420	79	75	5.8	334	328	78
	40.	1216	191.680	2.4	3.2	3.2	418	82	76	6.0	327	315	98
	50.	1226	201.740	2.4	3.2	3.2	418	84	76	6.2	331	331	102
	60.	1236	211.830	2.4	3.2	3.2	419	84	76	6.3	335	334	110
	70.	1246	221.970	2.4	3.2	3.2	418	84	77	6.3	329	331	92
	80.	1256	232.030	2.4	3.2	3.2	419	84	77	6.3	329	326	82
	90.	1306	242.020	2.4	3.2	3.2	419	83	77	6.3	326	331	78
	100.	1316	252.000	2.4	3.2	3.2	419	83	76	6.5	323	335	84
	110.	1326	262.010	2.4	3.2	3.2	418	84	77	6.8	327	329	96
	120.	1336	272.008	2.4	3.2	3.2	418	84	78	7.1	327	327	102

EMISSION TESTING FIELD DATA

PLANT & CITY	DATE	SAMPLING LOCATION	SAMPLE TYPE
Rhinelander Refiner Screenings	11/12/82	FGC Stack	M5

RUN NO.	OPERATOR	AMB. TEMP (°F)	BAR. PRESS. (IN. Hg)	STATIC PRESS. (IN. H_2O)	FILTER NUMBER(S)	STACK INSIDE DIAM. (INCHES)	PITOT TUBE Cp	TIME RUN NO.	PAGE
COMPOS	Rhinelander	70	30.02	-1.38	345923	108	0.84		1 of 1

Imp #104

PROBE LENGTH AND TYPE	NOZZLE I.D.	NOZZLE NO.	H_2O (%)	SAMPLE BOX NO.	METER BOX NO.	METER Δ H @	METER CAL. FACTOR Y	LEAK CHECK IN. Hg	LEAK CHECK CFM	K FACTOR	C FACTOR	PROBE HEAT SET	BOX HEAT SET	REF. ΔP	RECORD DATA MINS
6 ft Glass	.227		12		FB2	1.73	0.986	1.2	0.001			320	320		10

Pretest Leak Check 15 in 0.01 cfm

Pitot ± ✓

TRAVERSE POINT NUMBER	SAMPLING TIME, min	CLOCK TIME (24 hr CLOCK)	GAS METER READING (V_m), ft^3	VELOCITY HEAD (Δp_s), in. H_2O	ORIFICE PRESSURE DIFFERENTIAL (ΔH), in. H_2O DESIRED	ORIFICE PRESSURE DIFFERENTIAL (ΔH), in. H_2O ACTUAL	STACK TEMPERATURE (T_s), °F	DRY GAS METER TEMPERATURE INLET ($T_{m_{in}}$), °F	DRY GAS METER TEMPERATURE OUTLET ($T_{m_{out}}$), °F	PUMP VACUUM, in. Hg	SAMPLE BOX TEMPERATURE °F P	SAMPLE BOX TEMPERATURE °F F	IMPINGER TEMPERATURE °F
	0	1107	106.062										
Pt D	10.	1148	115.660	2.4	3.1	3.1	419	68	70	7.5	330	323	76
	20.	1158	125.330	2.3	3.0	3.0	419	70	72	7.2	333	343	78
	30.	1208	135.270	2.4	3.1	3.1	420	74	72	8.0	332	336	78
	40.	1218	145.260	2.4	3.1	3.1	418	78	75	8.3	319	341	96
	50.	1228	155.280	2.4	3.2	3.2	418	80	76	8.5	338	325	102
	60.	1238	165.180	2.4	3.2	3.2	419	82	77	8.5	330	331	110
	70.	1248	175.050	2.4	3.2	3.2	418	82	77	8.2	327	310	88
	80.	1258	184.970	2.4	3.2	3.2	419	82	76	8.6	321	308	78
	90.	1308	194.760	2.4	3.2	3.2	419	80	76	9.0	331	341	76
	100.	1318	204.650	2.4	3.2	3.2	419	80	76	9.3	327	316	82
	110.	1328	214.620	2.4	3.2	3.2	418	82	76	9.8	332	334	90
	120.	1338	224.777	2.4	3.2	3.2	418	82	76	10.2	339	347	106

QUAD TRAIN SAMPLE RECOVERY AND INTEGRITY SHEET

Plant Phillips Sample date 11/12/82
Sample location Unit 27.1 - outlet Recovery date 11/12/82
Run number 6A M5450 Recovered by PC & DS
Particulate sample type ____ M5 ____ M5-320 ✓ M5-450 ____ M5W
Particulate filter number 3450 226 ✓
Particulate filter sample I.D. 4006B ✓
Probe rinse Acetone I.D. 4006A ✓
Purge train 20 min (check when completed) ✓
Location of filter in back half 1 & 2

MOISTURE

	1st impinger	2nd impinger	3rd impinger	4th impinger	Silica gel
Final wt	556 g	721.3 g	652.1 g	____ g	910.5 g
Initial wt	670.1 g	605.0 g	588.0 g	____ g	830.8 g
Net wt	-114.1 g	116.3 g	64.1 g	— g	79.7 g

Total moisture 146.0 g ____ 90 % spent

RECOVERED SAMPLE

PROBE RINSE CONTAINER I.D. 4006 A ✓
IPA IMP. CONTAINER I.D. 4107 A ✓ LIQUID LEVEL MARKED ✓
H_2O_2 IMP. CONTAINER I.D. 4108 A ✓ LIQUID LEVEL MARKED ✓
BLANK CONTAINER(S) I.D. LIQUID LEVEL MARKED

IPA 4040 A ✓ ✓
H_2O_2 4039 A ✓ ✓
H_2O 4041 A ✓ ✓
Acetone 4042 A ✓ ✓

Samples stored and locked ____
Remarks ____

LABORATORY CUSTODY

Received by Gloria White Date 11/18/82
Remarks Reg. # 03882

QUAD TRAIN SAMPLE RECOVERY AND INTEGRITY SHEET

Plant Phillips Sample date 11/12/82
Sample location unit 27.1 outlet Recovery date 11/12/82
Run number 6BM5450 Recovered by PCADS
Particulate sample type ____ M5 ____ M5-320 ✓ M5-450 ____ M5W
Particulate filter number 3450 216 ✓
Particulate filter sample I.D. 4109B ✓
Probe rinse Acetone I.D. 4109A
Purge train 20 min (check when completed) ✓
Location of filter in back half 182

MOISTURE

	1st impinger	2nd impinger	3rd impinger	4th impinger	Silica gel
Final wt	504.1 g	658.8 g	695.1 g	____ g	945.2 g
Initial wt	659.4 g	588.5 g	602.2 g	____ g	852.2 g
Net wt	-155.3 g	70.3 g	92.9 g	— g	93.0 g

Total moisture 70.9 g 90 % spent

RECOVERED SAMPLE

PROBE RINSE CONTAINER I.D. 4109A ✓
IPA IMP. CONTAINER I.D. 4110A ✓ LIQUID LEVEL MARKED ✓
H_2O_2 IMP. CONTAINER I.D. 4111A ✓ LIQUID LEVEL MARKED ✓
BLANK CONTAINER(S) I.D. LIQUID LEVEL MARKED

IPA 4040A ✓ ✓
H_2O_2 4039A ✓ ✓
H_2O 4041A ✓ ✓
Acetone 4042A ✓

Samples stored and locked ____
Remarks ____

LABORATORY CUSTODY

Received by Donna White Date 11/18/82
Remarks Req. #03882

QUAD TRAIN SAMPLE RECOVERY AND INTEGRITY SHEET

Plant Phillips Sample date 11/12/82
Sample location Unit 27.1 - Outlet Recovery date 11/12/82
Run number 6C M5B Recovered by DC&DS
Particulate sample type ____ M5 ✓ M5-320 ____ M5-450 ____ M5W
Particulate filter number 3450 227 ✓
Particulate filter sample I.D. 4112 B ✓
Probe rinse Acetone I.D. 4112A
Purge train 20 min (check when completed) ✓
Location of filter in back half Between 1st & 2nd Impinger

MOISTURE

	1st impinger	2nd impinger	3rd impinger	4th impinger	Silica gel
Final wt	771.4 g	672.8 g	628.1 g	____ g	912.4 g
Initial wt	654.4 g	598.0 g	611.9 g	____ g	828.2 g
Net wt	117.0 g	74.8 g	17.2 g	— g	84.2 g

Total moisture 293.2 g 90 % spent

RECOVERED SAMPLE

PROBE RINSE CONTAINER I.D. 4112A ✓
IPA IMP. CONTAINER I.D. 4113A ✓ LIQUID LEVEL MARKED ✓
H_2O_2 IMP. CONTAINER I.D. 4114A ✓ LIQUID LEVEL MARKED ✓
BLANK CONTAINER(S) I.D. LIQUID LEVEL MARKED

IPA 4040A ✓ ✓
H_2O_2 4039A ✓ ✓
H_2O 4041A ✓ ✓
Acetone 4042A ✓ ✓

Samples stored and locked ____
Remarks ____

LABORATORY CUSTODY

Received by Gloria Dilute Date 11/18/82
Remarks reg. #03882

QUAD TRAIN SAMPLE RECOVERY AND INTEGRITY SHEET

Plant Phillips Sample date 11/12/82
Sample location unit 27.1 - outlet Recovery date 11/12/82
Run number 6D M5B Recovered by
Particulate sample type ____ M5 ✓ M5-320 ____ M5-450 ____ M5W
Particulate filter number 3450 228 ✓
Particulate filter sample I.D. 4115 B ✓
Probe rinse Acetone I.D. 4115 A ✓
Purge train 20 min (check when completed) ✓
Location of filter in back half Between 1st & 2nd Impinger

MOISTURE

	1st impinger	2nd impinger	3rd impinger	4th impinger	Silica gel
Final wt	735.1 g	682.3 g	619.5 g	____ g	930.3 g
Initial wt	674.4 g	609.7 g	605.8 g	____ g	852.4 g
Net wt	60.7 g	72.6 g	13.7 g	____ g	77.9 g

Total moisture 224.9 g 90 % spent

RECOVERED SAMPLE

PROBE RINSE CONTAINER I.D. 4115A ✓
IPA IMP. CONTAINER I.D. 4116A ✓ LIQUID LEVEL MARKED ✓
H_2O_2 IMP. CONTAINER I.D. 4117A ✓ LIQUID LEVEL MARKED ✓
BLANK CONTAINER(S) I.D. LIQUID LEVEL MARKED

IPA	4040A ✓	✓
H_2O_2	4039A ✓	✓
H_2O	4041A ✓	✓
Acetone	4042A ✓	✓

Samples stored and locked
Remarks

LABORATORY CUSTODY

Received by Steve White Date 11/18/82
Remarks reg. #03882

DRY MOLECULAR WEIGHT DETERMINATION

PLANT Phillips Sweeny
DATE 11/12/82 TEST NO 6
SAMPLING TIME (24-hr CLOCK)
SAMPLING LOCATION unit 27.1 - outlet
SAMPLE TYPE (BAG, INTEGRATED, CONTINUOUS) Int. Bag
ANALYTICAL METHOD ORSAT
AMBIENT TEMPERATURE 68
OPERATOR PAC
ORSAT LEAK CHECKED ✓

COMMENTS:

RUN / GAS	1		2		3		AVERAGE NET VOLUME	MULTIPLIER	MOLECULAR WEIGHT OF STACK GAS (DRY BASIS) M_d, lb/lb-mole
	ACTUAL READING	NET	ACTUAL READING	NET	ACTUAL READING	NET			
CO_2	14.5	14.5	14.6	14.6			14.55	44/100	
O_2 (NET IS ACTUAL O_2 READING MINUS ACTUAL CO_2 READING)	16.6	2.1	16.8	2.2			2.15	32/100	
CO (NET IS ACTUAL CO READING MINUS ACTUAL O_2 READING)								28/100	
N_2 (NET IS 100 MINUS ACTUAL CO READING)								28/100	
								TOTAL	

EMISSION TESTING FIELD DATA

PLANT & CITY	DATE	SAMPLING LOCATION	SAMPLE TYPE
PHILLIPS SWEENY	11/12/82	FCC STACK	HSB

RUN NO.	OPERATOR	AMB. TEMP (°F)	BAR. PRESS. (IN. Hg)	STATIC PRESS. (IN. H_2O)	FILTER NUMBER(S)	STACK INSIDE DIMEN. (INCHES)	PITOT TUBE Cp	THERM NO.	PAGE
1	MASON	105	30.00	-1.38	3459147	108	.84		1 of 1

PROBE LENGTH AND TYPE	NOZZLE I.D.	NOZZLE NO.	H_2O (S)	SAMPLE BOX NO.	METER BOX NO.	METER ΔH@	METER CAL. FACTOR Y	LEAK CHECK IN. Hg	LEAK CHECK CFM	K FACTOR	C FACTOR	PROBE HEAT SET	BOX HEAT SET	REF. ΔP	RECORD DATA MINS
6' GLASS	.222		20		1532.00	1.006	15	.004				320	320		10

TRAVERSE POINT NUMBER	SAMPLING TIME, min	CLOCK TIME (24 hr CLOCK)	GAS METER READING (V_m), ft^3	VELOCITY HEAD (Δp_s), in. H_2O	ORIFICE PRESSURE DIFFERENTIAL (ΔH), in. H_2O DESIRED	ORIFICE PRESSURE DIFFERENTIAL (ΔH), in. H_2O ACTUAL	STACK TEMPERATURE (T_s), °F	DRY GAS METER TEMPERATURE INLET ($T_{m_{in}}$), °F	DRY GAS METER TEMPERATURE OUTLET ($T_{m_{out}}$), °F	PUMP VACUUM, in. Hg	SAMPLE BOX TEMPERATURE °F P	SAMPLE BOX TEMPERATURE °F F	IMPINGER TEMPERATURE °F
	0	1528	789.235										
	10.		796.63	1.95	2.97	2.97	416	77	77	5.9	337	285	
	20.		805.08	1.95	2.99	2.99	416	80	77	6.2	329	320	78
	30.		813.63	1.95	2.99	2.99	416	85	77	6.3	342	311	
	40.		822.08	1.95	3.01	3.01	416	89	78	6.2	340	312	130
	50.		830.64	1.95	3.00	3.00	416	90	79	6.3	335	318	
	60.		839.16	1.95	3.01	3.01	416	90	79	6.3	339	314	91
	70.		847.67	1.95	3.01	3.01	416	90	79	6.6	336	309	89
	80.		856.25	1.95	3.01	3.01	416	90	78	6.8	328	325	84
	90.	1658	864.799	1.95	3.01	3.01	416	90	79	7.0	331	320	82
	100.												
	110.												
	120.												

[redacted]ISSION TE[redacted]TING [redacted]IELD [redacted]DATA

PLANT & CITY	DATE	SAMPLING LOCATION	SAMPLE TYPE
PHILLIPS SWEENY	11/12/[illegible]	RCG STACK	MSB

RUN NO.	OPERATOR	AMB. TEMP (°F)	BAR. PRESS. (IN. Hg)	STATIC PRESS. (IN. H_2O)	FILTER NUMBER(S)	STACK INSIDE DIMEN. (INCHES)	PITOT TUBE Cp	THERM NO.	PAGE
76MSB	DO	75	30.00	-1.38	3469145	108	.84		1 OF 1

PROBE LENGTH AND TYPE	NOZZLE I.D.	NOZZLE NO.	H_2O (%)	SAMPLE BOX NO.	METER BOX NO.	METER ΔH@	METER CAL. FACTOR Y	LEAK CHECK IN. Hg	LEAK CHECK CFM	K FACTOR	C FACTOR	PROBE HEAT SET	BOX HEAT SET	REF. ΔP	RECORD DATA MINS
6' GLASS	.221		80		1805	1.95	9.88	1.0	.016			320	320		10

TRAVERSE POINT NUMBER	SAMPLING TIME, min	CLOCK TIME (24 hr CLOCK)	GAS METER READING (V_m), ft^3	VELOCITY HEAD (Δp_s), in. H_2O	ORIFICE PRESSURE DIFFERENTIAL (ΔH), in. H_2O DESIRED	ORIFICE PRESSURE DIFFERENTIAL (ΔH), in. H_2O ACTUAL	STACK TEMPERATURE (T_s), °F	DRY GAS METER TEMPERATURE INLET ($T_{m_{in}}$), °F	DRY GAS METER TEMPERATURE OUTLET ($T_{m_{out}}$), °F	PUMP VACUUM, in. Hg	SAMPLE BOX TEMPERATURE °F P	SAMPLE BOX TEMPERATURE °F F	IMPINGER TEMPERATURE °F
	0	1529	451.757										
	10.		461.20	1.95	2.97	2.97	416	89	88	9.2	319	328	
	20.		470.66	1.95	2.99	2.99	416	91	89	9.2	316	328	100
	30.		480.08	1.95	2.99	2.99	416	95	89	9.2	320	329	
	40.		489.48	1.95	3.01	3.01	416	99	89	9.0	317	325	124
	50.		498.80	1.95	3.00	3.00	416	101	90	9.0	314	324	
	60.		508.13	1.95	3.01	3.01	416	102	90	9.0	312	327	87
	70.		517.48	1.95	3.01	3.01	416	101	90	9.2	305	326	98
	80.		526.88	1.95	3.01	3.01	416	101	90	9.4	324	329	87
	90.	1659	536.267	1.95	3.01	3.01	416	101	90	9.7	325	331	86
	100.												
	110.												
	120.												

EMISSION TESTING FIELD DATA

PLANT & CITY	DATE	SAMPLING LOCATION	SAMPLE TYPE
Phillips Petrol Sweeny	11/12/82	Flue Stack	M5

RUN NO.	OPERATOR	AMB. TEMP (°F)	BAR. PRESS. (IN. Hg)	STATIC PRESS. (IN. H_2O)	FILTER NUMBER(S)	STACK INSIDE DIMEN. (INCHES)	PITOT TUBE Cp	THERM NO.	PAGE
7 GMS1W	Phillips	73	30.10	-1.38	3H501449	108	0.84		1 of 1

TC#247
Pitot # 278
DR #124
Imp# 285

PROBE LENGTH AND TYPE	NOZZLE I.D.	NOZZLE NO.	H_2O (%)	SAMPLE BOX NO.	METER BOX NO.	METER ΔH@	METER CAL. FACTOR Y	LEAK CHECK IN. Hg	LEAK CHECK CFM	K FACTOR	C FACTOR	PROBE HEAT SET	BOX HEAT SET	REF. ΔP	RECORD DATA MINS
6 ft Glass	224		12		F87	1.71	1.001	1.35	0.00			250	250		10

Pretest Leak Check 15 IN Hg 0.01 cfm

TRAVERSE POINT NUMBER	SAMPLING TIME, min	CLOCK TIME (24 hr CLOCK)	GAS METER READING (V_m), ft^3	VELOCITY HEAD (Δp_s), in. H_2O	ORIFICE PRESSURE DIFFERENTIAL (ΔH), in. H_2O DESIRED	ORIFICE PRESSURE DIFFERENTIAL (ΔH), in. H_2O ACTUAL	STACK TEMPERATURE (T_s), °F	DRY GAS METER TEMPERATURE INLET ($T_{m_{in}}$), °F	DRY GAS METER TEMPERATURE OUTLET ($T_{m_{out}}$), °F	PUMP VACUUM, in. Hg	SAMPLE BOX TEMPERATURE °F P	SAMPLE BOX TEMPERATURE °F F	IMPINGER TEMPERATURE °F
	0	1529	274.480										
Pt C	10.	1539	284.330	2.4	3.1	3.1	416	75	73	10.2	275	265	78
	20.	1549	294.130	2.4	3.1	3.1	416	75	73	10.5	260	268	74
	30.	1559	303.970	2.4	3.1	3.1	415	76	73	10.8	249	259	78
B-8	40.	1609	313.860	2.4	3.2	3.2	415	78	73	11.0	250	250	88
	50.	1619	323.740	2.4	3.2	3.2	415	78	73	10.8	255	248	84
	60.	1629	333.680	2.4	3.2	3.2	414	80	74	10.5	251	246	78
	70.	1639	343.650	2.4	3.2	3.2	414	80	74	10.5	255	254	84
	80.	1649	353.260	2.3	3.0	3.0	414	80	74	10.0	255	257	77
	90.	1659	362.877	2.3	3.0	3.0	414	80	74	10.0	252	260	79
	100.												
	110.												
	120.												

EMISSION TESTING FIELD DATA

PLANT & CITY	DATE	SAMPLING LOCATION	SAMPLE TYPE
Phillips Pet.	11/12/82	FCC Stack	M5

RUN NO.	OPERATOR	AMB. TEMP (°F)	BAR. PRESS. (in. Hg)	STATIC PRESS. (in. H_2O)	FILTER NUMBER(S)	STACK INSIDE DIAM. (inches)	PITOT TUBE Cp	THERM NO.	PAGE
7 DMSM	Phillips	73	30.18	-1.38	3459	108	0.84		1 of 1

Imp # 394

PROBE LENGTH AND TYPE	NOZZLE I.D.	NOZZLE NO.	H_2O (%)	SAMPLE BOX NO.	METER BOX NO.	METER Δ H @	METER CAL. FACTOR Y	LEAK CHECK in. Hg	LEAK CHECK CFM	K FACTOR	C FACTOR	PROBE HEAT SET	BOX HEAT SET	REF. ΔP	RECORD DATA MINS
Na Fitt Glass	.226		12		FB2	1.75	0.986	8.0	0.005			250	250		10

Pretest Leak Check 15 in Hg 0.01 cfm Pitot ±

TRAVERSE POINT NUMBER	SAMPLING TIME, min	CLOCK TIME (24 hr CLOCK)	GAS METER READING (V_m), ft^3	VELOCITY HEAD (Δp_s), in. H_2O	ORIFICE PRESSURE DIFFERENTIAL (ΔH), in. H_2O DESIRED	ORIFICE PRESSURE DIFFERENTIAL (ΔH), in. H_2O ACTUAL	STACK TEMPERATURE (T_s), °F	DRY GAS METER TEMPERATURE INLET ($T_{m_{in}}$), °F	DRY GAS METER TEMPERATURE OUTLET ($T_{m_{out}}$), °F	PUMP VACUUM, in. Hg	SAMPLE BOX TEMPERATURE °F P	SAMPLE BOX TEMPERATURE °F F	IMPINGER TEMPERATURE °F
	0	1531	226.453										
Port D	10.	1541	236.120	2.4	3.1	3.1	416	68	68	7.0	314	265	76
	20.	1551	245.830	2.4	3.1	3.1	416	68	68	7.5	282	282	75
	30.	1601	255.490	2.4	3.1	3.1	415	72	68	7.0	287	240	78
	40.	1611	265.290	2.4	3.1	3.1	415	75	68	7.0	288	259	72
	50.	1621	274.980	2.4	3.1	3.1	415	76	70	7.0	290	241	76
	60.	1631	284.620	2.4	3.1	3.1	414	77	70	7.0	296	246	74
	70.	1641	294.330	2.4	3.1	3.1	414	77	70	7.0	283	269	78
	80.	1651	303.820	2.3	3.0	3.0	414	77	71	7.0	286	254	79
	90.	1701	313.342	2.3	3.0	3.0	414	77	71	7.2	284	246	81
	100.												
	110.												
	120.												

QUAD TRAIN SAMPLE RECOVERY AND INTEGRITY SHEET

Plant Phillips Sample date 11/12/82
Sample location Unit 27.1 - outlet Recovery date 11/13/82
Run number 7A M5B Recovered by
Particulate sample type ____ M5 ✓ M5-320 ____ M5-450 ____ M5W
Particulate filter number 3450 147 ✓
Particulate filter sample I.D. 4121B ✓
Probe rinse Acetone I.D. 4121A ✓
Purge train 20 min (check when completed)
Location of filter in back half

MOISTURE

	1st impinger	2nd impinger	3rd impinger	4th impinger	Silica gel
Final wt	602.8 g	693.0 g	654.7 g	____ g	958.2 g
Initial wt	697.9 g	598.8 g	599.6 g	____ g	874.0 g
Net wt	-95.1 g	94.2 g	55.1 g	— g	84.2 g

Total moisture 138.4 g ____ % spent

RECOVERED SAMPLE

PROBE RINSE CONTAINER I.D. 4121A ✓
IPA IMP. CONTAINER I.D. 4122A ✓ LIQUID LEVEL MARKED
H_2O_2 IMP. CONTAINER I.D. 4123A ✓ LIQUID LEVEL MARKED
BLANK CONTAINER(S) I.D. LIQUID LEVEL MARKED

IPA 4040A ✓
H_2O_2 4039A ✓
H_2O 4041A ✓
Acetone 4042A ✓

Samples stored and locked
Remarks

LABORATORY CUSTODY

Received by Donna Shute Date 11/18/82
Remarks reg. # 03882

QUAD TRAIN SAMPLE RECOVERY AND INTEGRITY SHEET

(7B)

Plant Phillips Sample date 11/12/82

Sample location Unit 27.1 outlet Recovery date 11/13/82

Run number 7B M5B Recovered by

Particulate sample type ____ M5 ✓ M5-320 ____ M5-450 ____ M5W

Particulate filter number 3450145 ✓

Particulate filter sample I.D. 4124B ✓

Probe rinse Acetone I.D. 4124A ✓

Purge train 20 min (check when completed)

Location of filter in back half 1 & 2

MOISTURE

	1st impinger	2nd impinger	3rd impinger	4th impinger	Silica gel
Final wt	542.9 g	687.5 g	650.7 g	____ g	921.3 g
Initial wt	674.6 g	603.3 g	585.4 g	____ g	843.5 g
Net wt	-131.7 g	84.2 g	65.3 g	— g	77.8 g

Total moisture 95.6 g ____ % spent

RECOVERED SAMPLE

PROBE RINSE CONTAINER I.D. 4124A ✓

IPA IMP. CONTAINER I.D. 4125A ✓ LIQUID LEVEL MARKED

H_2O_2 IMP. CONTAINER I.D. 4126A ✓ LIQUID LEVEL MARKED

BLANK CONTAINER(S) I.D. LIQUID LEVEL MARKED

IPA 4040A ✓

H_2O_2 4039A ✓

H_2O 4041A ✓

Acetone 4042A ✓

Samples stored and locked

Remarks

LABORATORY CUSTODY

Received by Diana Shute Date 11/18/82

Remarks Reg. # 03882

QUAD TRAIN SAMPLE RECOVERY AND INTEGRITY SHEET

Plant Phillips Sample date 11/12/82
Sample location unit 27.1 outlet Recovery date 11/13/82
Run number 7CM5W Recovered by PC&DS
Particulate sample type ____ M5 ____ M5-320 ____ M5-450 ✓ M5W
Particulate filter number 3450 144 ✓
Particulate filter sample I.D. 4127A ✓
Probe rinse water I.D. 4127A ✓
Purge train 20 min (check when completed) ____
Location of filter in back half 182

MOISTURE

	1st impinger	2nd impinger	3rd impinger	4th impinger	Silica gel
Final wt	742.1 g	636.7 g	654.4 g	____ g	947.3 g
Initial wt	~~694.7~~ 652.6 g	~~632.4~~ 609.2 g	~~579.0~~ 580.2 g	____ g	~~862.3~~ 856.0 g
Net wt	89.5 g	27.5 g	74.2 g	— g	91.3 g

Total moisture 282.5 g ____ % spent

RECOVERED SAMPLE

PROBE RINSE CONTAINER I.D. 4127A ✓
IPA IMP. CONTAINER I.D. 4128A ✓ LIQUID LEVEL MARKED ____
H_2O_2 IMP. CONTAINER I.D. 4129A ✓ LIQUID LEVEL MARKED ____
BLANK CONTAINER(S) I.D. LIQUID LEVEL MARKED

IPA 4040A ✓ ✓
H_2O_2 4039A ✓ ✓
H_2O 4041A ✓ ✓
Acetone 4042A ✓ N/A ✓

Samples stored and locked ____
Remarks ____

LABORATORY CUSTODY

Received by Donna White Date 11/18/82
Remarks Reg. #03882

QUAD TRAIN SAMPLE RECOVERY AND INTEGRITY SHEET

Plant Phillips Sample date 11/12/82
Sample location Unit 27.1 outlet Recovery date 11/13/82
Run number 7DM5W Recovered by PCADS
Particulate sample type ____ M5 ____ M5-320 ____ M5-450 ✓ M5W
Particulate filter number 3450 143 ✓
Particulate filter sample I.D. 4118B ✓
Probe rinse H_2O I.D. 4118A ✓
Purge train 20 min (check when completed) ✓
Location of filter in back half 192

MOISTURE

	1st impinger	2nd impinger	3rd impinger	4th impinger	Silica gel
Final wt	743.9 g	688.7 g	621.5 g	____ g	932.7 g
Initial wt	659.6 g	614.2 g	576.9 g	____ g	849.6 g
Net wt	89.3 g	74.5 g	44.6 g	— g	83.1 g

Total moisture 291.5 g 90 % spent

RECOVERED SAMPLE

PROBE RINSE CONTAINER I.D. 4118A ✓
IPA IMP. CONTAINER I.D. 4119A ✓ LIQUID LEVEL MARKED ✓
H_2O_2 IMP. CONTAINER I.D. 4120A ✓ LIQUID LEVEL MARKED ✓
BLANK CONTAINER(S) I.D. LIQUID LEVEL MARKED

IPA	4040A ✓	✓
H_2O_2	4039A ✓	✓
H_2O	4041A ✓	✓
Acetone	4042A N/A	✓

Samples stored and locked ____
Remarks ____

LABORATORY CUSTODY

Received by Leonia White Date 11/18/82
Remarks Reg. # 03882

DRY MOLECULAR WEIGHT DETERMINATION

PLANT Phillips
DATE 11/13/82 TEST NO 7
SAMPLING TIME (24-hr CLOCK)
SAMPLING LOCATION
SAMPLE TYPE (BAG, INTEGRATED, CONTINUOUS)
ANALYTICAL METHOD
AMBIENT TEMPERATURE
OPERATOR BAC
ORSAT LEAK CHECKED ✓

COMMENTS:

RUN / GAS	1		2		3		AVERAGE NET VOLUME	MULTIPLIER	MOLECULAR WEIGHT OF STACK GAS (DRY BASIS) M_d, lb/lb-mole
	ACTUAL READING	NET	ACTUAL READING	NET	ACTUAL READING	NET			
CO_2	14.1	14.1	14.1	14.1				44/100	
O_2 (NET IS ACTUAL O_2 READING MINUS ACTUAL CO_2 READING)	17.1	3.0	17.1	3.0				32/100	
CO (NET IS ACTUAL CO READING MINUS ACTUAL O_2 READING)								28/100	
N_2 (NET IS 100 MINUS ACTUAL CO READING)								28/100	
								TOTAL	

EMISSION TESTING FIELD DATA

PLANT & CITY	DATE	SAMPLING LOCATION	SAMPLE TYPE
PHILLIPS SWEENY	1/1/13/82	FCC STACK	MS-450

RUN NO.	OPERATOR	AMB. TEMP (°F)	BAR. PRESS. (IN. Hg)	STATIC PRESS. (IN. H_2O)	METER NUMBER(S)	STACK INSIDE DIMEN. (INCHES)	PITOT TUBE Cp	THERM NO.	PAGE
1	DO	50	30.39	-1.38	3450132	195	.84		1 OF 1

PROBE LENGTH AND TYPE	NOZZLE I.D.	NOZZLE NO.	H_2O (%)	SAMPLE BOX NO.	METER BOX NO.	METER ΔH@	METER CAL. FACTOR Y	LEAK CHECK IN. Hg	LEAK CHECK CFM	K FACTOR	C FACTOR	PROBE HEAT SET	BOX HEAT SET	REF. ΔP	RECORD DATA MINS
6' GLASS	.219		8.0		PB3200	1.00	1.19	.006				450	450		10

TRAVERSE POINT NUMBER	SAMPLING TIME, min	CLOCK TIME (24 hr CLOCK)	GAS METER READING (V_m), ft^3	VELOCITY HEAD (Δp_s), in. H_2O	ORIFICE PRESSURE DIFFERENTIAL (ΔH), in. H_2O DESIRED	ORIFICE PRESSURE DIFFERENTIAL (ΔH), in. H_2O ACTUAL	STACK TEMPERATURE (T_s), °F	DRY GAS METER TEMPERATURE INLET ($T_{m_{in}}$), °F	DRY GAS METER TEMPERATURE OUTLET ($T_{m_{out}}$), °F	PUMP VACUUM, in. Hg	SAMPLE BOX TEMPERATURE °F P	SAMPLE BOX TEMPERATURE °F F	IMPINGER TEMPERATURE °F
	0	1203	865.047										
	10.		873.58	1.95	2.91	2.91	424	79	76	9.7	470	455	
	20.		881.96	1.9	2.84	2.84	424	81	76	9.2	469	461	145
	30.		890.30	1.9	2.86	2.86	424	86	76	8.7	468	462	163
	40.		898.78	1.95	2.96	2.96	425	91	78	8.7	479	457	128
	50.		907.23	1.95	2.96	2.96	425	92	79	8.7	486	465	112
	60.		915.63	1.9	2.89	2.89	424	91	80	8.8	479	455	105
	70.		924.10	1.95	2.97	2.97	424	91	80	9.0	484	459	103
	80.		932.67	1.95	2.97	2.97	423	90	80	9.4	486	460	101
	90.		941.11	1.9	2.90	2.90	423	91	80	9.3	490	458	98
	100.		949.56	1.9	2.90	2.90	424	91	80	9.3	478	458	97
	110.		958.12	1.95	2.98	2.98	424	92	80	9.8	472	464	105
	120.	1303	966.713	1.95	2.99	2.99	424	93	80	9.8	470	457	99

EMISSION TESTING FIELD DATA

PLANT & CITY	DATE	SAMPLING LOCATION	SAMPLE TYPE
PHILLIPS SWEENEY	11/3/82	FCC STACK	MS-456

RUN NO.	OPERATOR	AMB. TEMP (°F)	BAR. PRESS. (IN. Hg)	STATIC PRESS. (IN. H_2O)	FILTER NUMBER(S)	STACK INSIDE DIMEN. (INCHES)	PITOT TUBE C_p	THERM NO.	PAGE
1	DG	50	30.39	-.138	3452 12	108	.84		1 OF 1

PROBE LENGTH AND TYPE	NOZZLE I.D.	NOZZLE NO.	H_2O (%)	SAMPLE BOX NO.	METER BOX NO.	METER ΔH@	METER CAL. FACTOR Y	LEAK CHECK IN. Hg	LEAK CHECK CFM	K FACTOR	C FACTOR	PROBE HEAT SET	BOX HEAT SET	REF. ΔP	RECORD DATA MINS
6' GLASS	.223		1.0		1.85	1.95	.998	1.25	.020			450	450		10

TRAVERSE POINT NUMBER	SAMPLING TIME, min	CLOCK TIME (24 hr CLOCK)	GAS METER READING (V_m), ft^3	VELOCITY HEAD (Δp_s), in. H_2O	ORIFICE PRESSURE DIFFERENTIAL (ΔH), in. H_2O DESIRED	ORIFICE PRESSURE DIFFERENTIAL (ΔH), in. H_2O ACTUAL	STACK TEMPERATURE (T_s), °F	DRY GAS METER TEMPERATURE INLET ($T_{m_{in}}$), °F	DRY GAS METER TEMPERATURE OUTLET ($T_{m_{out}}$), °F	PUMP VACUUM, in. Hg	SAMPLE BOX TEMPERATURE °F P	SAMPLE BOX TEMPERATURE °F F	IMPINGER TEMPERATURE °F
	0	1204	536.601										
	10.		545.78	1.95	2.91	2.91	424	76	71	10.2	499	426	
	20.		554.89	1.9	2.84	2.84	424	79	73	10.7	449	454	109
	30.		563.93	1.9	2.86	2.86	424	83	75	10.4	462	448	118
	40.		573.10	1.95	2.96	2.96	425	89	77	10.7	449	450	114
	50.		582.02	1.95	2.96	2.96	425	91	79	10.2	439	444	97
	60.		590.93	1.9	2.89	2.89	424	93	81	10.1	460	448	95
	70.		599.90	1.95	2.97	2.97	424	93	82	10.2	441	442	87
	80.		608.89	1.95	2.97	2.97	423	95	83	10.4	440	445	90
	90.		617.81	1.9	2.90	2.90	423	95	84	10.6	441	445	92
	100.		626.76	1.9	2.90	2.90	424	95	85	10.8	445	452	103
	110.		635.85	1.95	2.98	2.98	424	97	86	11.0	447	454	101
	120.	1404	644.913	1.95	2.99	2.99	424	98	87	11.2	438	460	95
	.		.	.	.	.				.			
	.		.	.	.	.				.			
	.		.	.	.	.				.			
	.		.	.	.	.				.			
	.		.	.	.	.				.			
	.		.	.	.	.				.			
	.		.	.	.	.				.			
	.		.	.	.	.				.			
	.		.	.	.	.				.			
	.		.	.	.	.				.			
	.		.	.	.	.				.			
	.		.	.	.	.				.			

EMISSION TESTING FIELD DATA

PLANT & CITY	DATE	SAMPLING LOCATION	SAMPLE TYPE
Phillips Petrol Bruceinny	11/13/84	FCC stack	MS

RUN NO.	OPERATOR	AMB. TEMP (°F)	BAR. PRESS. (in. Hg)	STATIC PRESS. (in. H_2O)	FILTER NUMBER(S)	STACK INSIDE DIAM. (inches)	PITOT TUBE Cp	THERM NO.	PAGE
8CM5M	Rhinehart	65	30.39	-1.38	34519136	198	0.84		1 of 1

PROBE LENGTH AND TYPE	NOZZLE I.D.	NOZZLE NO.	H_2O (%)	SAMPLE BOX NO.	METER BOX NO.	METER Δ H @	METER CAL. FACTOR Y	LEAK CHECK in. Hg	LEAK CHECK CFM	K FACTOR	C FACTOR	PROBE HEAT SET	BOX HEAT SET	REF. ΔP	RECORD DATA MINS
6 ft Glass	.244		12		FB7	1.71	1.010	10	0.0			250	259		15

Pretest Leak Check 15 in Hg 0.005 cfm

TRAVERSE POINT NUMBER	SAMPLING TIME, min	CLOCK TIME (24 hr CLOCK)	GAS METER READING (V_m), ft^3	VELOCITY HEAD (Δp_s), in. H_2O	ORIFICE PRESSURE DIFFERENTIAL (ΔH), in. H_2O DESIRED	ORIFICE PRESSURE DIFFERENTIAL (ΔH), in. H_2O ACTUAL	STACK TEMPERATURE (T_s), °F	DRY GAS METER TEMPERATURE INLET ($T_{m_{in}}$), °F	DRY GAS METER TEMPERATURE OUTLET ($T_{m_{out}}$), °F	PUMP VACUUM, in. Hg	SAMPLE BOX TEMPERATURE °F P	SAMPLE BOX TEMPERATURE °F F	IMPINGER TEMPERATURE °F
	0	1340	363.537										
Port C	10.	1350	373.350	2.4	3.1	3.1	422	64	62	10.0	240	256	78
	20.	1400	383.080	2.4	3.1	3.1	420	64	62	9.5	247	261	82
	30.	1410	392.870	2.4	3.1	3.1	419	68	62	9.5	250	245	78
	40.	1420	402.840	2.4	3.1	3.1	420	71	63	9.5	251	260	83
1-9	50.	1430	412.710	2.4	3.1	3.1	419	73	64	8.0	250	254	86
	60.	1440	422.490	2.4	3.1	3.1	419	74	64	7.5	249	247	88
	70.	1450	432.230	2.4	3.1	3.1	420	74	64	7.5	250	259	80
	80.	1500	442.000	2.4	3.1	3.1	420	74	64	7.5	251	258	77
	90.	1510	451.840	2.4	3.1	3.1	420	76	66	7.5	249	247	82
	100.	1520	461.440	2.4	3.1	3.1	420	76	66	8.2	248	249	88
	110.	1530	471.290	2.4	3.1	3.1	419	76	65	10.2	248	246	84
	120.	1540	481.126	2.4	3.1	3.1	419	76	67	11.2	248	254	76

Tc# 147
Pitot# 278
DR# 124
Imp# 285

EMISSION TESTING FIELD DATA

PLANT & CITY	DATE	SAMPLING LOCATION	SAMPLE TYPE
Phillips Petroleum	11/13/82	FCC Stack	M5

RUN NO.	OPERATOR	AMB. TEMP (°F)	BAR. PRESS. (IN. Hg)	STATIC PRESS. (IN. H_2O)	FILTER NUMBER(S)	STACK INSIDE DIMEN. (INCHES)	PITOT TUBE Cp	THERM NO.	PAGE
8	Phillips	65	30.39	-1.38	34501-35	198	0.84		1 of 1

Imp #394

PROBE LENGTH AND TYPE	NOZZLE I.D.	NOZZLE NO.	H_2O, (%)	SAMPLE BOX NO.	METER BOX NO.	METER ΔH@	METER CAL. FACTOR Y	LEAK CHECK IN. Hg	LEAK CHECK CFM	K FACTOR	C FACTOR	PROBE HEAT SET	BOX HEAT SET	REF. ΔP	RECORD DATA REQ
16 ft Glass	.2271		12		FB2	1.73	0.9861	12	0.000			250	250		10

Pretest Leak Check 15 in 0.00 cfm

Pitot ± ✓

TRAVERSE POINT NUMBER	SAMPLING TIME, min	CLOCK TIME (24 hr CLOCK)	GAS METER READING (V_m), ft^3	VELOCITY HEAD (Δp_s), in. H_2O	ORIFICE PRESSURE DIFFERENTIAL (ΔH), in. H_2O DESIRED	ORIFICE PRESSURE DIFFERENTIAL (ΔH), in. H_2O ACTUAL	STACK TEMPERATURE (T_s), °F	DRY GAS METER TEMPERATURE INLET ($T_{m_{in}}$), °F	DRY GAS METER TEMPERATURE OUTLET ($T_{m_{out}}$), °F	PUMP VACUUM, in. Hg	SAMPLE BOX TEMPERATURE °F P	SAMPLE BOX TEMPERATURE °F F	IMPINGER TEMPERATURE °F
	0	1342	313.856										
Pot D	10.	1352	323.440	2.4	3.0	3.0	422	60	60	7.0	270	253	80
	20.	1402	333.120	2.4	3.0	3.0	420	60	60	7.2	278	251	84
	30.	1412	343.010	2.4	3.1	3.1	419	70	61	7.2	271	246	94
	40.	1422	352.850	2.4	3.1	3.1	420	70	67	7.2	267	253	98
	50.	1432	362.120	2.4	3.1	3.1	419	68	64	7.0	262	247	88
	60.	1442	372.040	2.4	3.1	3.1	419	70	64	7.5	259	253	76
	70.	1452	381.800	2.4	3.1	3.1	420	70	64	9.7	263	247	72
	80.	1502	391.410	2.4	3.1	3.1	420	70	64	10.0	266	253	75
	90.	1512	401.130	2.4	3.1	3.1	420	71	64	10.0	261	250	78
	100.	1522	410.830	2.4	3.1	3.1	420	71	64	10.5	261	252	83
	110.	1532	420.540	2.4	3.1	3.1	419	71	65	11.3	265	249	74
	120.	1542	430.349	2.4	3.1	3.1	419	71	65	11.5	260	245	78

QUAD TRAIN SAMPLE RECOVERY AND INTEGRITY SHEET

Plant Phillips Sample date 11/13/82
Sample location Unit 27.1 Outlet Recovery date 11/13/82
Run number 8A M5-450 Recovered by DS&PC
Particulate sample type ____ M5 ____ M5-320 ✓ M5-450 ____ M5W
Particulate filter number 3450 137 ✓
Particulate filter sample I.D. 4130 B ✓
Probe rinse Acetone I.D. 4130 A ✓
Purge train 20 min (check when completed) ✓
Location of filter in back half 1st & 2nd Imp.

MOISTURE

	1st impinger	2nd impinger	3rd impinger	4th impinger	Silica gel
Final wt	515.6 g	647.6 g	713.2 g	____ g	941.7 g
Initial wt	675.5 g	597.0 g	593.3 g	____ g	844.0 g
Net wt	-159.9 g	50.6 g	119.9 g	— g	97.7 g

Total moisture 108.3 g 90 % spent

RECOVERED SAMPLE

PROBE RINSE CONTAINER I.D. 4131 A ✓
IPA IMP. CONTAINER I.D. 4131 A ✓ LIQUID LEVEL MARKED ✓
H_2O_2 IMP. CONTAINER I.D. 4132 A ✓ LIQUID LEVEL MARKED ✓
BLANK CONTAINER(S) I.D. LIQUID LEVEL MARKED

IPA	4040 A ✓	✓
H_2O_2	4039 A ✓	✓
H_2O	4041 A ✓	✓
Acetone	4042 A ✓	✓

Samples stored and locked ____
Remarks Filter between first & 2nd Imp's discoloured brown.

LABORATORY CUSTODY

Received by Diana White Date 11/18/82
Remarks reg. #03882

QUAD TRAIN SAMPLE RECOVERY AND INTEGRITY SHEET

Plant Phillips Sample date 11/13/82
Sample location Unit 27.1 Outlet Recovery date 11/13/82
Run number 8B M5-450 Recovered by PCEDS
Particulate sample type ____ M5 ____ M5-320 ✓ M5-450 ____ M5W
Particulate filter number 3450 171 ✓
Particulate filter sample I.D. 4133 B ✓
Probe rinse Acetone I.D. 4133A ✓
Purge train 20 min (check when completed) ✓
Location of filter in back half 1st or 2nd Tap.

MOISTURE

	1st impinger	2nd impinger	3rd impinger	4th impinger	Silica gel
Final wt	525.8 g	710.4 g	667.5 g	____ g	870.5 g
Initial wt	622.9 g	596.7 g	595.7 g	____ g	795.0 g
Net wt	-97.1 g	113.7 g	71.8 g	— g	75.5 g

Total moisture 163.9 g 85 % spent

RECOVERED SAMPLE

PROBE RINSE CONTAINER I.D. 4133A ✓
IPA IMP. CONTAINER I.D. 4134A ✓ LIQUID LEVEL MARKED ✓
H_2O_2 IMP. CONTAINER I.D. 4135A ✓ LIQUID LEVEL MARKED ✓
BLANK CONTAINER(S) I.D. LIQUID LEVEL MARKED

IPA	4040A ✓	✓
H_2O_2	4039A ✓	✓
H_2O	4041A ✓	✓
Acetone	4042A ✓	✓

Samples stored and locked ____
Remarks ____

LABORATORY CUSTODY

Received by Gloria White Date 11/18/82
Remarks Reg. # 03882

QUAD TRAIN SAMPLE RECOVERY AND INTEGRITY SHEET

Plant Phillips Sample date 11/13/82
Sample location Unit 27.1 Outlet Recovery date 11/15/82
Run number 8 C M 5 W Recovered by
Particulate sample type ____ M5 ____ M5-320 ____ M5-450 ✓ M5W
Particulate filter number 3450 136 ✓
Particulate filter sample I.D. 4136 B ✓
Probe rinse H_2O I.D. 4136A ✓
Purge train 20 min (check when completed)
Location of filter in back half 1st + 2nd Imp

MOISTURE

	1st impinger	2nd impinger	3rd impinger	4th impinger	Silica gel
Final wt	810.1 g	659.7 g	626.4 g	____ g	898.8 g
Initial wt	667.2 g	608.5 g	600.9 g	____ g	813.8 g
Net wt	142.9 g	51.2 g	25.5 g	— g	85.0 g

Total moisture 304.6 g 90 % spent

RECOVERED SAMPLE

PROBE RINSE CONTAINER I.D. 4136 A ✓
IPA IMP. CONTAINER I.D. 4137 A ✓ LIQUID LEVEL MARKED
H_2O_2 IMP. CONTAINER I.D. 4138 A ✓ LIQUID LEVEL MARKED
BLANK CONTAINER(S) I.D. LIQUID LEVEL MARKED

IPA 4040 A ✓ ✓
H_2O_2 4039 A ✓ ✓
H_2O 4041 A ✓ ✓
Acetone 4042 A ✓ N/A ✓

Samples stored and locked
Remarks

LABORATORY CUSTODY

Received by Louis White Date 11/18/82
Remarks reg. # 03882

QUAD TRAIN SAMPLE RECOVERY AND INTEGRITY SHEET

Plant Phillips Sample date 11/13/82
Sample location Unit 27.1 Outlet Recovery date 11/15/82
Run number 8D M5W Recovered by ACDS
Particulate sample type ____ M5 ____ M5-320 ____ M5-450 ✓ M5W
Particulate filter number 3450 135 ✓
Particulate filter sample I.D. 4139 B ✓
Probe rinse H_2O ✓ I.D. 4139A ✓
Purge train 20 min (check when completed) ____
Location of filter in back half 1st + 2nd Imp.

MOISTURE

	1st impinger	2nd impinger	3rd impinger	4th impinger	Silica gel
Final wt	769.2 g	664.8 g	657.3 g	____ g	967.9 g
Initial wt	~~644.6~~ 670.3 g	574.5 g	629.8 g	____ g	880.7 g
Net wt	98.9 g	90.3 g	27.5 g	— g	87.2 g

Total moisture 303.9 g 85 % spent

RECOVERED SAMPLE

PROBE RINSE CONTAINER I.D. 4139A ✓
IPA IMP. CONTAINER I.D. 4140A ✓ LIQUID LEVEL MARKED ✓
H_2O_2 IMP. CONTAINER I.D. 4141A ✓ LIQUID LEVEL MARKED ✓
BLANK CONTAINER(S) I.D. LIQUID LEVEL MARKED

IPA	4040A ✓	✓
H_2O_2	4039A ✓	✓
H_2O	4041A ✓	✓
Acetone	4042A N/A	✓

Samples stored and locked ____
Remarks ____

LABORATORY CUSTODY

Received by Lonna Mute Date 11/18/82
Remarks Reg. #03882

DRY MOLECULAR WEIGHT DETERMINATION

PLANT Phillips
DATE 11-13-82 TEST NO Run 8
SAMPLING TIME (24-hr CLOCK) 1600
SAMPLING LOCATION Unit 27.1 Outlet
SAMPLE TYPE (BAG, INTEGRATED, CONTINUOUS) BAG
ANALYTICAL METHOD ORSAT
AMBIENT TEMPERATURE 70
OPERATOR D. Schiffl
ORSAT LEAK CHECKED ✓

COMMENTS:

GAS \ RUN	1		2		3		AVERAGE NET VOLUME	MULTIPLIER	MOLECULAR WEIGHT OF STACK GAS (DRY BASIS) M_d, lb/lb-mole
	ACTUAL READING	NET	ACTUAL READING	NET	ACTUAL READING	NET			
CO_2	15.0	15.0	15.0	15.0			15.0	44/100	
O_2 (NET IS ACTUAL O_2 READING MINUS ACTUAL CO_2 READING)	18.0	3.0	18.0	3.0			3.0	32/100	
CO (NET IS ACTUAL CO READING MINUS ACTUAL O_2 READING)								28/100	
N_2 (NET IS 100 MINUS ACTUAL CO READING)								28/100	
								TOTAL	

EMISSION TESTING FIELD DATA

PLANT & CITY	DATE	SAMPLING LOCATION	SAMPLE TYPE
PHILLIPS, BUFFALO NY	11/15/84	FCC STACK	PM5

RUN NO.	OPERATOR	AMB. TEMP (°F)	BAR. PRESS. (IN. Hg)	STATIC PRESS. (IN. H_2O)	FILTER NUMBER(S)	STACK INSIDE DIMEN. (INCHES)	PITOT TUBE Cp	THERM NO.	PAGE
9A	DO	50	30.34	-13.8	3H59207	196	.84		1 OF 1

PROBE LENGTH AND TYPE	NOZZLE I.D.	NOZZLE NO.	H_2O (%)	SAMPLE BOX NO.	METER BOX NO.	METER ΔH@	METER CAL. FACTOR Y	LEAK CHECK IN. Hg	LEAK CHECK CFM	K FACTOR	C FACTOR	PROBE HEAT SET	BOX HEAT SET	REF. ΔP	RECORD DATA MINS
6' GLASS	.252		8.0		B3209	1.906		15	.002			250	250		10

TRAVERSE POINT NUMBER	SAMPLING TIME, min	CLOCK TIME (24 hr CLOCK)	GAS METER READING (V_m), ft^3	VELOCITY HEAD (Δp_s), in. H_2O	ORIFICE PRESSURE DIFFERENTIAL (ΔH), in. H_2O DESIRED	ORIFICE PRESSURE DIFFERENTIAL (ΔH), in. H_2O ACTUAL	STACK TEMPERATURE (T_s), °F	DRY GAS METER TEMPERATURE INLET ($T_{m_{in}}$), °F	DRY GAS METER TEMPERATURE OUTLET ($T_{m_{out}}$), °F	PUMP VACUUM, in. Hg	SAMPLE BOX TEMPERATURE °F P	SAMPLE BOX TEMPERATURE °F F	IMPINGER TEMPERATURE °F
	0	1016	966.966										
	10.		975.27	1.9	2.77	2.77	417	55	52	5.8	275	259	
	20.		983.44	1.9	2.79	2.79	417	59	53	5.7	263	274	65
	30.		991.70	1.9	2.81	2.81	417	67	55	5.7	259	262	106
	40.		0.07	1.95	2.90	2.90	417	70	57	5.8	258	261	116
	50.		8.44	1.9	2.84	2.84	417	72	59	5.8	265	256	107
	60.		16.76	1.9	2.85	2.85	417	72	59	5.8	249	248	82
	70.		25.14	1.9	2.85	2.85	417	73	59	5.9	260	247	73
	80.		33.60	1.95	2.93	2.93	417	75	59	6.1	264	245	75
	90.		41.94	1.9	2.86	2.86	417	75	60	6.0	257	248	73
	100.		50.43	1.95	2.94	2.94	417	75	61	6.3	267	265	73
	110.		58.92	1.95	2.94	2.94	417	78	62	6.3	269	264	76
	120.	1216	67.302	1.9	2.88	2.88	417	82	65	6.3	273	264	75

EMISSION TESTING FIELD DATA

PLANT & CITY	DATE	SAMPLING LOCATION	SAMPLE TYPE
PHILLIPS SWEENY	11/15/82	FCC STACK	MS

RUN NO.	OPERATOR	AMB. TEMP (°F)	BAR. PRESS. (IN. Hg)	STATIC PRESS. (IN. H_2O)	FILTER NUMBER(S)	STACK INSIDE DIMEN. (INCHES)	PITOT TUBE Cp	THE BOX NO.	PAGE
96	DG	50	30.34	-1.38	34/59295	108	.84		0 F 1

PROBE LENGTH AND TYPE	NOZZLE I.D.	NOZZLE NO.	H_2O (%)	SAMPLE BOX NO.	METER BOX NO.	METER ΔH@	METER CAL. FACTOR Y	LEAK CHECK IN. Hg	LEAK CHECK CFM	K FACTOR	C FACTOR	PROBE HEAT SET	BOX HEAT SET	REF. ΔP	RECORD DATA MINS
6' SCLASS	.221		18		F85	1.95	.9999	14.0	.018			250	250		10

7 8 9 10 TRAVERSE POINT NUMBER	11 12 13 14 SAMPLING TIME, min	15 16 17 18 CLOCK TIME (24 hr CLOCK)	19 20 21 22 23 24 GAS METER READING (V_m), ft^3	25 26 27 28 29 VELOCITY HEAD (Δp_s), in. H_2O	30 31 32 33 ORIFICE PRESSURE DIFFERENTIAL (ΔH), in. H_2O DESIRED	34 35 36 37 ORIFICE PRESSURE DIFFERENTIAL (ΔH), in. H_2O ACTUAL	38 39 40 41 STACK TEMPERATURE (T_s), °F	42 43 44 DRY GAS METER TEMPERATURE INLET ($T_{m_{in}}$), °F	45 46 47 DRY GAS METER TEMPERATURE OUTLET ($T_{m_{out}}$), °F	48 49 50 51 PUMP VACUUM, in. Hg	52 53 54 SAMPLE BOX TEMPERATURE °F P	55 56 57 SAMPLE BOX TEMPERATURE °F F	58 59 60 INPINGER TEMPERATURE °F
	0	1017	645.186										
	10.		653.91	1.9	2.77	2.77	417	59	54	9.0	269	271	
	20.		662.57	1.9	2.79	2.79	417	65	56	9.2	267	245	55
	30.		671.30	1.9	2.81	2.81	417	70	59	9.6	266	252	57
	40.		680.00	1.95	2.90	2.90	417	72	61	9.9	268	254	75
	50.		688.80	1.9	2.84	2.84	417	76	63	11.3	271	254	75
	60.		697.56	1.9	2.85	2.85	417	77	64	11.9	260	257	79
	70.		706.45	1.9	2.85	2.85	417	79	66	12.7	254	257	72
	80.		715.43	1.95	2.93	2.93	417	80	68	13.0	255	248	66
	90.		724.25	1.9	2.86	2.86	417	79	69	12.8	251	260	64
	100.		733.14	1.95	2.94	2.94	417	79	70	13.2	260	265	69
	110.		742.04	1.95	2.94	2.94	417	80	71	13.2	259	258	67
	120.	1217	750.927	1.9	2.88	2.88	417	82	73	13.2	258	260	64

EMISSION TESTING FIELD DATA

PLANT & CITY	DATE	SAMPLING LOCATION	SAMPLE TYPE
Phillips Petroleum Sweeny	11/18/82	Fluid Bitrick	M5

RUN NO.	OPERATOR	AMB. TEMP (°F)	BAR. PRESS. (IN. Hg)	STATIC PRESS. (IN. H_2O)	FILTER NUMBER(S)	STACK INSIDE DIAM. (INCHES)	PITOT TUBE Cp	THERM NO.	PAGE
FCM5b	Phillips	50	30.34	-1.38	34502	108	0.84		1 of 1

PROBE LENGTH AND TYPE	NOZZLE I.D.	NOZZLE NO.	H_2O (%)	SAMPLE BOX NO.	METER BOX NO.	METER ΔH@	METER CAL. FACTOR Y	LEAK CHECK IN. Hg	LEAK CHECK CFM	K FACTOR	C FACTOR	PROBE HEAT SET	BOX HEAT SET	REF. ΔP	RECORD DATA MINS
6 ft Glass	224		12		FB7	1.7	1.001	13	0.015			320	399		16

TC # 142
Pitot # 278
DR # 124
Imp # 285

Pretest Leak Check 15 in Hg 0.01 cfm

TRAVERSE POINT NUMBER	SAMPLING TIME, min	CLOCK TIME (24 hr CLOCK)	GAS METER READING (V_m), ft^3	VELOCITY HEAD (Δp_s), in. H_2O	ORIFICE PRESSURE DIFFERENTIAL (ΔH), in. H_2O DESIRED	ORIFICE PRESSURE DIFFERENTIAL (ΔH), in. H_2O ACTUAL	STACK TEMPERATURE (T_s), °F	DRY GAS METER TEMPERATURE INLET ($T_{m_{in}}$), °F	DRY GAS METER TEMPERATURE OUTLET ($T_{m_{out}}$), °F	PUMP VACUUM, in. Hg	SAMPLE BOX TEMPERATURE °F P	SAMPLE BOX TEMPERATURE °F F	IMPINGER TEMPERATURE °F
	0	1016	481.347										
Port C	10.	1026	490.810	2.4	3.0	3.0	417	52	50	11.2	434	315	68
	20.	1036	500.380	2.4	3.0	3.0	416	52	50	12.2	415	328	74
	30.	1046	509.910	2.4	3.0	3.0	417	56	50	12.2	482	345	102
	40.	1056	519.420	2.4	3.0	3.0	416	58	52	13.0	336	321	90
	50.	1106	528.930	2.4	3.0	3.0	418	60	54	12.8	345	328	94
	60.	1116	538.410	2.4	3.0	3.0	418	60	54	13.0	342	315	92
	70.	1126	547.940	2.4	3.0	3.0	419	62	54	13.0	347	315	84
	80.	1136	557.200	2.3	2.9	2.9	419	64	56	12.0	349	315	78
	90.	1146	566.620	2.4	3.0	3.0	419	64	56	12.7	341	323	80
	100.	1156	576.000	2.4	3.0	3.0	421	65	57	13.0	353	317	84
	110.	1206	585.560	2.4	3.1	3.1	421	66	58	13.5	344	333	74
	120.	1216	594.919	2.4	3.1	3.1	421	66	58	14.5	345	328	78

EMISSION TESTING FIELD DATA

PLANT & CITY	DATE	SAMPLING LOCATION	SAMPLE TYPE
Phillips Petroleum Sweeny	11/18/82	Fac. Stack	M5

RUN NO.	OPERATOR	AMB. TEMP (°F)	BAR. PRESS. (IN. Hg)	STATIC PRESS. (IN. H_2O)	FILTER NUMBER(S)	STACK INSIDE DIAM. (INCHES)	PITOT TUBE Cp	THERM NO.	PAGE
9DM6	Phillips	50	30.34	-1.38	34514298	198	0.84		1 of 1

Imp #394

PROBE LENGTH AND TYPE	NOZZLE I.D.	NOZZLE NO.	H_2O (S)	SAMPLE BOX NO.	METER BOX NO.	METER ΔH@	METER CAL. FACTOR Y	LEAK CHECK IN. Hg	LEAK CHECK CFM	K FACTOR	C FACTOR	PROBE HEAT SET	BOX HEAT SET	REF. ΔP	RECORD DATA MINS
16 ft Glass	2.26		12		FB2	1.70	0.8816	19	0.01			320	320		10

Pretest Leak Check 15 in Hg 0.01 cfm

Pitot ± ✓

TRAVERSE POINT NUMBER	SAMPLING TIME, min	CLOCK TIME (24 hr CLOCK)	GAS METER READING (V_m), ft^3	VELOCITY HEAD (Δp_s), in. H_2O	ORIFICE PRESSURE DIFFERENTIAL (ΔH), in. H_2O DESIRED	ORIFICE PRESSURE DIFFERENTIAL (ΔH), in. H_2O ACTUAL	STACK TEMPERATURE (T_s), °F	DRY GAS METER TEMPERATURE INLET ($T_{m_{in}}$), °F	DRY GAS METER TEMPERATURE OUTLET ($T_{m_{out}}$), °F	PUMP VACUUM, in. Hg	SAMPLE BOX TEMPERATURE °F P	SAMPLE BOX TEMPERATURE °F F	IMPINGER TEMPERATURE °F
	0	1018	430.548										
Port D	10.	1028	440.000	2.4	3.0	3.0	417	54	54	7.2	526	309	72
	20.	1038	449.270	2.4	3.0	3.0	416	54	54	6.8	304	308	76
	30.	1048	458.950	2.4	3.0	3.0	417	54	54	7.8	324	349	66
	40.	1058	468.570	2.4	3.0	3.0	416	58	52	8.5	329	305	110
	50.	1108	478.060	2.4	3.0	3.0	418	58	52	8.0	337	300	96
	60.	1118	487.490	2.4	3.0	3.0	418	58	52	8.0	345	303	86
	70.	1128	497.010	2.4	3.0	3.0	419	59	53	8.2	341	317	82
	80.	1138	506.230	2.3	2.9	2.9	419	60	56	7.8	344	321	78
	90.	1148	515.750	2.4	3.0	3.0	419	61	55	8.0	339	309	70
	100.	1158	525.410	2.4	3.0	3.0	421	62	56	9.5	346	300	74
	110.	1208	535.050	2.4	3.0	3.0	421	64	56	9.5	348	319	76
	120.	1218	544.773	2.4	3.0	3.0	421	64	56	9.5	347	343	78

QUAD TRAIN SAMPLE RECOVERY AND INTEGRITY SHEET

Plant Phillips Sample date 11/15/82
Sample location Unit 27.1 - outlet Recovery date 11/15/82
Run number 9A M5 Recovered by BC & DS
Particulate sample type ✓ M5 ____ M5-320 ____ M5-450 ____ M5W
Particulate filter number 3450 207 ✓
Particulate filter sample I.D. 4142 B ✓
Probe rinse Acetone I.D. 4142 A ✓
Purge train 20 min (check when completed) ✓
Location of filter in back half 1st & 2nd Imp

MOISTURE

	1st impinger	2nd impinger	3rd impinger	4th impinger	Silica gel
Final wt	630.2 g	729.2 g	667.7 g	____ g	962.7 g
Initial wt	697.3 g	694.6 g	591.5 g	____ g	877.1 g
Net wt	____ g	____ g	____ g	____ g	____ g

Total moisture ____ g 90 % spent

RECOVERED SAMPLE

PROBE RINSE CONTAINER I.D. 4142 A ✓
IPA IMP. CONTAINER I.D. 4143 A ✓ LIQUID LEVEL MARKED ✓
H_2O_2 IMP. CONTAINER I.D. 4144 A ✓ LIQUID LEVEL MARKED ✓
BLANK CONTAINER(S) I.D. LIQUID LEVEL MARKED

IPA 4040 A ✓ ✓
H_2O_2 4039 A ✓ ✓
H_2O 4041 A ✓ ✓
Acetone 4042 A ✓ ✓

Samples stored and locked ____
Remarks ____

LABORATORY CUSTODY

Received by Gloria White Date 11/18/82
Remarks Reg. # 03882

QUAD TRAIN SAMPLE RECOVERY AND INTEGRITY SHEET

Plant Phillips Sample date 11/15/82
Sample location Unit 27.1 - outlet Recovery date 11/15/82
Run number 9BM5 Recovered by PCB
Particulate sample type ✓ M5 ____ M5-320 ____ M5-450 ____ M5W
Particulate filter number 3450 205 ✓
Particulate filter sample I.D. 4145 B ✓
Probe rinse Acetone I.D. 4145 A ✓
Purge train 20 min (check when completed) ✓
Location of filter in back half 1st + 2nd Imp

MOISTURE

	1st impinger	2nd impinger	3rd impinger	4th impinger	Silica gel
Final wt	649.1 g	736.9 g	615.6 g	____ g	960.4 g
Initial wt	676.0 g	618.9 g	571.2 g	____ g	872.5 g
Net wt	____ g	____ g	____ g	____ g	____ g

Total moisture ____ g ____ % spent

RECOVERED SAMPLE

PROBE RINSE CONTAINER I.D. 4145 A ✓
IPA IMP. CONTAINER I.D. 4146 A ✓ LIQUID LEVEL MARKED ✓
H_2O_2 IMP. CONTAINER I.D. 4147 A ✓ LIQUID LEVEL MARKED ✓
BLANK CONTAINER(S) I.D. LIQUID LEVEL MARKED

IPA 4040A ✓ ✓
H_2O_2 4039A ✓ ✓
H_2O 4041A ✓ ✓
Acetone 4042A ✓ ✓

Samples stored and locked ____
Remarks ____

LABORATORY CUSTODY

Received by Donna White Date 11/18/82
Remarks reg. #03882

QUAD TRAIN SAMPLE RECOVERY AND INTEGRITY SHEET

Plant Phillips Sample date 11/15/82
Sample location Unit 27.1 - outlet Recovery date 11/15/82
Run number 9C M5B Recovered by DC&DS
Particulate sample type _____ M5 ✓ M5-320 _____ M5-450 _____ M5W
Particulate filter number 3450 206 ✓
Particulate filter sample I.D. 4148 B ✓
Probe rinse Acetone I.D. 4148 A ✓
Purge train 20 min (check when completed) ✓
Location of filter in back half 1st & 2nd Imp.

MOISTURE

	1st impinger	2nd impinger	3rd impinger	4th impinger	Silica gel
Final wt	780.7 g	653.1 g	621.5 g	_____ g	930.5 g
Initial wt	662.0 g	597.6 g	598.2 g	_____ g	842.6 g
Net wt	_____ g	_____ g	_____ g	_____ g	_____ g

Total moisture _____ g 95 % spent

RECOVERED SAMPLE

PROBE RINSE CONTAINER I.D. 4148 A ✓
IPA IMP. CONTAINER I.D. 4149 A ✓ LIQUID LEVEL MARKED ✓
H_2O_2 IMP. CONTAINER I.D. 4150 A ✓ LIQUID LEVEL MARKED ✓
BLANK CONTAINER(S) I.D. LIQUID LEVEL MARKED

IPA	4040 A ✓	✓
H_2O_2	4039 A ✓	✓
H_2O	4041 A ✓	✓
Acetone	4042 A ✓	✓

Samples stored and locked _____
Remarks _____

LABORATORY CUSTODY

Received by Gloria White Date 11/18/82
Remarks reg. # 03882

QUAD TRAIN SAMPLE RECOVERY AND INTEGRITY SHEET

Plant Phillips Sample date 11/15/82
Sample location Unit 27.1 - outlet Recovery date 11/15/82
Run number 9D M5B Recovered by RGDS
Particulate sample type ____ M5 ✓ M5-320 ____ M5-450 ____ M5W
Particulate filter number 3450 208 ✓
Particulate filter sample I.D. 4151B ✓
Probe rinse Acetone I.D. 4151A ✓
Purge train 20 min (check when completed) ✓
Location of filter in back half 1st & 2nd Impl

MOISTURE

	1st impinger	2nd impinger	3rd impinger	4th impinger	Silica gel
Final wt	604.2 g	749.2 g	653.1 g	____ g	961.2 g
Initial wt	657.0 g	606.2 g	589.9 g	____ g	871.1 g
Net wt	____ g	____ g	____ g	____ g	____ g

Total moisture ____ g 75 % spent

RECOVERED SAMPLE

PROBE RINSE CONTAINER I.D. 4151A ✓
IPA IMP. CONTAINER I.D. 4152A ✓ LIQUID LEVEL MARKED ✓
H_2O_2 IMP. CONTAINER I.D. 4153A ✓ LIQUID LEVEL MARKED ✓
BLANK CONTAINER(S) I.D. LIQUID LEVEL MARKED

IPA 4040A ✓ ✓
H_2O_2 4039A ✓ ✓
H_2O 4041A ✓
Acetone 4042A ✓

Samples stored and locked ____
Remarks ____

LABORATORY CUSTODY

Received by Gloria White Date 11/18/82
Remarks Reg #03882

DRY MOLECULAR WEIGHT DETERMINATION

PLANT Phillips Sweeny
DATE 11/15/82 TEST NO 7
SAMPLING TIME (24-hr CLOCK)
SAMPLING LOCATION Outlet
SAMPLE TYPE (BAG, INTEGRATED, CONTINUOUS) Int Bag
ANALYTICAL METHOD ORSAT
AMBIENT TEMPERATURE
OPERATOR PAC
ORSAT LEAK CHECKED ✓

COMMENTS:

GAS \ RUN	1		2		3		AVERAGE NET VOLUME	MULTIPLIER	MOLECULAR WEIGHT OF STACK GAS (DRY BASIS) M_d, lb/lb-mole
	ACTUAL READING	NET	ACTUAL READING	NET	ACTUAL READING	NET			
CO_2	12.2	12.2	12.2	12.2				44/100	
O_2 (NET IS ACTUAL O_2 READING MINUS ACTUAL CO_2 READING)	16.8	4.6	16.8	4.6				32/100	
CO (NET IS ACTUAL CO READING MINUS ACTUAL O_2 READING)								28/100	
N_2 (NET IS 100 MINUS ACTUAL CO READING)								28/100	
								TOTAL	

EMISSION TESTING FIELD DATA

PLANT & CITY	DATE	SAMPLING LOCATION	SAMPLE TYPE
PHILLIPS SWEENY	11/15/82	FCC STACK	M5-459

RUN NO.	OPERATOR	AMB. TEMP (°F)	BAR. PRESS. (IN. Hg)	STATIC PRESS. (IN. H_2O)	FILTER NUMBER(S)	STACK INSIDE DIAM. (INCHES)	PITOT TUBE Cp	THERM NO.	PAGE
104	DO	60	30.27	-13.8	3450200	108	.84		1 OF 1

PROBE LENGTH AND TYPE	NOZZLE I.D.	NOZZLE NO.	H_2O (%)	SAMPLE BOX NO.	METER BOX NO.	METER ΔH@	METER CAL. FACTOR Y	LEAK CHECK IN. Hg	LEAK CHECK CFM	K FACTOR	C FACTOR	PROBE HEAT SET	BOX HEAT SET	REF. ΔP	RECORD DATA MINS
6' SCRS	.219		5.0		PB3209	1.006	1.00	.002				452	459		10

TRAVERSE POINT NUMBER	SAMPLING TIME, min	CLOCK TIME (24 hr CLOCK)	GAS METER READING (V_m), ft^3	VELOCITY HEAD (Δp_s), in. H_2O	ORIFICE PRESSURE DIFFERENTIAL (ΔH), in. H_2O DESIRED	ORIFICE PRESSURE DIFFERENTIAL (ΔH), in. H_2O ACTUAL	STACK TEMPERATURE (T_s), °F	DRY GAS METER TEMPERATURE INLET ($T_{m_{in}}$), °F	DRY GAS METER TEMPERATURE OUTLET ($T_{m_{out}}$), °F	PUMP VACUUM, in. Hg	SAMPLE BOX TEMPERATURE °F P	SAMPLE BOX TEMPERATURE °F F	IMPINGER TEMPERATURE °F
	0	1344	67.554										
	10.		75.97	1.95	2.94	2.94	420	73	71	7.2	396	415	
	20.		84.49	1.95	2.95	2.95	420	77	72	8.8	476	475	87
	30.		93.05	1.95	2.97	2.97	420	72	72	8.8	469	463	167
M-5	40.		101.52	1.95	2.98	2.98	420	75	73	8.2	472	465	150
	50.		110.02	1.95	2.99	2.99	420	77	73	8.3	477	474	121
	60.		118.60	1.95	2.99	2.99	420	77	73	8.7	452	475	107
	70.		127.26	2.0	3.08	3.08	420	77	73	8.8	448	454	107
	80.		135.99	2.05	3.15	3.15	420	77	73	9.2	447	460	102
	90.		144.60	2.0	3.07	3.07	420	77	73	9.1	443	458	102
	100.	1524	153.105	1.95	2.99	2.99	420	77	73	8.9	445	453	111
	110.												
	120.												

EMISSION TESTING FIELD DATA

PLANT & CITY	DATE	SAMPLING LOCATION	SAMPLE TYPE
PHILLIPS SALEEM	11/15/82	FRC STACK	MS-459

RUN NO.	OPERATOR	AMB. TEMP (°F)	BAR. PRESS. (IN. Hg)	STATIC PRESS. (IN. H_2O)	FILTER NUMBER(S)	STACK INSIDE DIMEN. (INCHES)	PITOT TUBE Cp	THERM NO.	PAGE
1	DO	60	30.27	-1.38	3459/199	108	.84		1 of 1

PROBE LENGTH AND TYPE	NOZZLE I.D.	NOZZLE NO.	H_2O (%)	SAMPLE BOX NO.	METER BOX NO.	METER ΔH@	METER CAL. FACTOR Y	LEAK CHECK IN. Hg	LEAK CHECK CFM	K FACTOR	C FACTOR	PROBE HEAT SET	BOX HEAT SET	REF. ΔP	RECORD DATA MINS
6' GLASS	.243		80		P65	1.95	.988	1.15	.929			450	450		10

TRAVERSE POINT NUMBER	SAMPLING TIME, min	CLOCK TIME (24 hr CLOCK)	GAS METER READING (V_m), ft^3	VELOCITY HEAD (Δp_s), in. H_2O	ORIFICE PRESSURE DIFFERENTIAL (ΔH), in. H_2O DESIRED	ORIFICE PRESSURE DIFFERENTIAL (ΔH), in. H_2O ACTUAL	STACK TEMPERATURE (T_s), °F	DRY GAS METER TEMPERATURE INLET ($T_{m_{in}}$), °F	DRY GAS METER TEMPERATURE OUTLET ($T_{m_{out}}$), °F	PUMP VACUUM, in. Hg	SAMPLE BOX TEMPERATURE °F P	SAMPLE BOX TEMPERATURE °F F	IMPINGER TEMPERATURE °F
	0	1345	757.015										
	10.		759.91	1.95	2.94	2.94	420	74	73	9.1	470	431	77
	20.		768.82	1.95	2.95	2.95	420	80	74	9.8	466	419	78
	30.		777.76	1.95	2.97	2.97	420	82	76	10.4	478	426	125
	40.		786.60	1.95	2.98	2.98	420	87	79	10.2	474	442	110
	50.		795.69	1.95	2.99	2.99	420	90	80	10.2	469	454	99
	60.		804.64	1.95	2.99	2.99	420	92	81	10.1	478	454	87
	70.		813.71	2.0	3.08	3.08	420	93	81	10.2	477	462	77
	80.		822.79	2.05	3.15	3.15	420	93	81	10.3	478	455	74
	90.		831.68	2.0	3.07	3.07	420	93	81	10.3	472	449	75
	100.	1524	840.632	1.95	2.99	2.99	420	93	81	10.9	478	450	80
	110.												
	120.												

[redacted]SSI[redacted]TES[redacted]G [redacted]LD [redacted]A

PLANT & CITY	DATE	SAMPLING LOCATION	SAMPLE TYPE
Phillipsburg Petro, Syracuse NY	11/14/82	FCC Stack	MS

Tc * 57
Ptot * 278
DR * 124
Imp * 285

RUN NO.	OPERATOR	AMB. TEMP (°F)	BAR. PRESS. (IN. Hg)	STATIC PRESS. (IN. H_2O)	FILTER NUMBER(S)	STACK INSIDE DIMEN. (INCHES)	PITOT TUBE Cp	THERM NO.	PAGE
1 of MS 1	Phillipps	63	30.34	-1.38		108	0.84		1 of 1

PROBE LENGTH AND TYPE	NOZZLE I.D.	NOZZLE NO.	H_2O (%)	SAMPLE BOX NO.	METER BOX NO.	METER ΔH@	METER CAL. FACTOR Y	LEAK CHECK IN. Hg	LEAK CHECK CFM	K FACTOR	C FACTOR	PROBE HEAT SET	BOX HEAT SET	REF. ΔP	RECORD DATA MINS
6 ft Glass	.224		12		FB7	1.71	1.00	15	0.01			320	320		10

Pretest Leak Check 15 in Hg 0.01 cfm

TRAVERSE POINT NUMBER	SAMPLING TIME, min	CLOCK TIME (24 hr CLOCK)	GAS METER READING (V_m), ft^3	VELOCITY HEAD (Δp_s), in. H_2O	ORIFICE PRESSURE DIFFERENTIAL (ΔH), in. H_2O DESIRED	ORIFICE PRESSURE DIFFERENTIAL (ΔH), in. H_2O ACTUAL	STACK TEMPERATURE (T_s), °F	DRY GAS METER TEMPERATURE INLET ($T_{m_{in}}$), °F	DRY GAS METER TEMPERATURE OUTLET ($T_{m_{out}}$), °F	PUMP VACUUM, in. Hg	SAMPLE BOX TEMPERATURE °F P	SAMPLE BOX TEMPERATURE °F F	IMPINGER TEMPERATURE °F
	0	1345	595.168										
PrtC	10.	1355	604.610	2.4	3.0	3.0	424	61	59	6.2	310	330	76
	20.	1405	613.920	2.3	2.9	2.9	425	60	58	6.5	315	362	112
	30.	1415	623.230	2.3	2.9	2.9	424	66	59	6.2	323	344	120
	40.	1425	632.500	2.3	2.9	2.9	423	66	59	6.0	316	374	96
	50.	1435	641.840	2.3	2.9	2.9	423	68	60	6.0	320	312	94
	60.	1445	651.120	2.3	2.9	2.9	424	70	60	6.0	319	305	78
	70.	1455	660.340	2.3	2.9	2.9	424	71	61	6.1	319	338	80
	80.	1505	669.620	2.3	2.9	2.9	425	71	61	6.3	320	326	81
	90.	1515	678.940	2.3	2.9	2.9	425	71	61	6.5	321	334	78
	100.	1525	688.090	2.3	2.9	2.9	425	71	62	6.8	321	339	88
	110.												
	120.												

EMISSION TESTING FIELD DATA

PLANT & CITY	DATE	SAMPLING LOCATION	SAMPLE TYPE
Phillips Petroleum Bartlesville	11/14/82	FCC Outlet	M5

RUN NO.	OPERATOR	AMB. TEMP (°F)	BAR. PRESS. (IN. Hg)	STATIC PRESS. (IN. H_2O)	FILTER NUMBER(S)	STACK INSIDE DIMEN. (INCHES)	PITOT TUBE Cp	THERM NO.	PAGE
1	DMSA Phillips	63	29.34	-1.38		108	0.84		0 F

PROBE LENGTH AND TYPE	NOZZLE I.D.	NOZZLE NO.	H_2O (%)	SAMPLE BOX NO.	METER BOX NO.	METER ΔH@	METER CAL. FACTOR Y	LEAK CHECK IN. Hg	LEAK CHECK CFM	K FACTOR	C FACTOR	PROBE HEAT SET	BOX HEAT SET	REF. ΔP	RECORD DATA RUNS
Quartz Glass	.224		12		FB2	1.73	3.986	10	0.005			320	320		10

Imp # 394

Pretest Leak Check 15 in Hg 0.01 cfm

Pitot +✓ −✓

TRAVERSE POINT NUMBER	SAMPLING TIME, min	CLOCK TIME (24 hr CLOCK)	GAS METER READING (V_m), ft^3	VELOCITY HEAD (Δp_s), in. H_2O	ORIFICE PRESSURE DIFFERENTIAL (ΔH), in. H_2O DESIRED	ORIFICE PRESSURE DIFFERENTIAL (ΔH), in. H_2O ACTUAL	STACK TEMPERATURE (T_s), °F	DRY GAS METER TEMPERATURE INLET ($T_{m_{in}}$), °F	DRY GAS METER TEMPERATURE OUTLET ($T_{m_{out}}$), °F	PUMP VACUUM, in. Hg	SAMPLE BOX TEMPERATURE °F P	SAMPLE BOX TEMPERATURE °F F	IMPINGER TEMPERATURE °F
	0	1346	544.707										
Pitot	10.	1356	554.590	2.4	3.0	3.0	424	54	54	8.8	340	310	76
	20.	1406	564.020	2.3	2.9	2.9	425	59	55	9.2	341	327	76
	30.	1416	573.370	2.3	2.9	2.9	424	60	54	8.5	305	331	104
	40.	1426	582.880	2.3	2.9	2.9	423	64	56	8.5	322	327	102
	50.	1436	592.310	2.3	2.9	2.9	423	64	56	8.2	323	323	92
	60.	1446	601.670	2.3	2.9	2.9	424	64	56	8.2	338	324	84
	70.	1456	611.000	2.3	2.9	2.9	424	66	56	8.2	330	325	78
	80.	1506	620.300	2.3	2.9	2.9	425	66	56	8.2	346	335	72
	90.	1516	629.510	2.3	2.9	2.9	425	66	56	8.2	334	333	72
	100.	1526	638.707	2.3	2.9	2.9	425	66	56	8.5	334	324	94
	110.												
	120.												

B-8

QUAD TRAIN SAMPLE RECOVERY AND INTEGRITY SHEET

Plant Phillips Sample date 11/15/82
Sample location Unit 27.1 Outlet Recovery date 11/15/82
Run number 10 A M5-450 Recovered by PC&DS
Particulate sample type ____ M5 ____ M5-320 ✓ M5-450 ____ M5W
Particulate filter number 3450 200✓
Particulate filter sample I.D. 4717B ✓
Probe rinse Acetone I.D. 4717A ✓
Purge train 20 min (check when completed) ✓
Location of filter in back half 1st & 2nd Imp.

MOISTURE

	1st impinger	2nd impinger	3rd impinger	4th impinger	Silica gel
Final wt	515 g	656.7 g	685.9 g	____ g	948.9 g
Initial wt	676.6 g	595.3 g	597.2 g	____ g	863.2 g
Net wt	____ g	____ g	____ g	____ g	____ g

Total moisture ____ g ____ % spent

RECOVERED SAMPLE

PROBE RINSE CONTAINER I.D. 4717A ✓
IPA IMP. CONTAINER I.D. 4718A ✓ LIQUID LEVEL MARKED ✓
H_2O_2 IMP. CONTAINER I.D. 4719A ✓ LIQUID LEVEL MARKED ✓
BLANK CONTAINER(S) I.D. LIQUID LEVEL MARKED

IPA 4040A ✓ ✓
H_2O_2 4039A ✓ ✓
H_2O 4041A ✓ ✓
Acetone 4042A ✓ ✓

Samples stored and locked ____
Remarks ____

LABORATORY CUSTODY

Received by Lonna White Date 11/18/82
Remarks Reg # 03882

QUAD TRAIN SAMPLE RECOVERY AND INTEGRITY SHEET

Plant Phillips Sample date 11/15/82
Sample location Unit 27.1 Outlet Recovery date 11/15/82
Run number 10B M5-450 Recovered by DCADS
Particulate sample type ____ M5 ____ M5-320 ✓ M5-450 ____ M5W
Particulate filter number 3450 199 ✓
Particulate filter sample I.D. 4720B ✓
Probe rinse Acetone I.D. 4720A ✓
Purge train 20 min (check when completed) ✓
Location of filter in back half 1st + 2nd Imp.

MOISTURE

	1st impinger	2nd impinger	3rd impinger	4th impinger	Silica gel
Final wt	677.8 g	702.6 g	661.1 g	____ g	928.3 g
Initial wt	670.4 g	593.8 g	603.2 g	____ g	850.4 g
Net wt	____ g	____ g	____ g	____ g	____ g

Total moisture ____ g ____ % spent

RECOVERED SAMPLE

PROBE RINSE CONTAINER I.D. 4720A ✓
IPA IMP. CONTAINER I.D. 4721A ✓ LIQUID LEVEL MARKED ✓
H_2O_2 IMP. CONTAINER I.D. 4722A ✓ LIQUID LEVEL MARKED ✓
BLANK CONTAINER(S) I.D. LIQUID LEVEL MARKED

IPA	4040A ✓	✓
H_2O_2	4039A ✓	✓
H_2O	4041A ✓	✓
Acetone	4042A ✓	✓

Samples stored and locked ____
Remarks ____

LABORATORY CUSTODY

Received by Gloria Thurte Date 11/18/82
Remarks Reg. #03882

QUAD TRAIN SAMPLE RECOVERY AND INTEGRITY SHEET

Plant Phillips Sample date 11/15/82
Sample location Unit 27.1 Outlet Recovery date 11/15/82
Run number 10C M5B Recovered by PC&DS
Particulate sample type ____ M5 ✓ M5-320 ____ M5-450 ____ M5W
Particulate filter number 3450196 ✓
Particulate filter sample I.D. 4723 B ✓
Probe rinse Acetone I.D. 4723 A ✓
Purge train 20 min (check when completed) ✓
Location of filter in back half Pg + 2nd Imp.

MOISTURE

	1st impinger	2nd impinger	3rd impinger	4th impinger	Silica gel
Final wt	722.8 g	756.6 g	____ g	586.4 g	929.7 g
Initial wt	671.0 g	599.1 g	____ g	611.0 g	840.8 g
Net wt	____ g	____ g	____ g	____ g	____ g

Total moisture ____ g ____ % spent

RECOVERED SAMPLE

PROBE RINSE CONTAINER I.D. 4723 A ✓
IPA IMP. CONTAINER I.D. 4724 A ✓ LIQUID LEVEL MARKED ✓
H_2O_2 IMP. CONTAINER I.D. 4725 A ✓ LIQUID LEVEL MARKED ✓
BLANK CONTAINER(S) I.D. LIQUID LEVEL MARKED

IPA	4040 A ✓	✓
H_2O_2	4039 A ✓	✓
H_2O	4041 A	✓
Acetone	4042 A	✓

Samples stored and locked ____
Remarks ____

LABORATORY CUSTODY

Received by Gloria White Date 11/18/82
Remarks Reg. # 03882

QUAD TRAIN SAMPLE RECOVERY AND INTEGRITY SHEET

Plant Phillips Sample date 11/15/82
Sample location Unit 271 Outlet Recovery date 11/15/82
Run number 10D M5B Recovered by PC & DS
Particulate sample type ____ M5 ✓ M5-320 ____ M5-450 ____ M5W
Particulate filter number 3950184 ✓
Particulate filter sample I.D. 4726B ✓
Probe rinse Acetone I.D. 4726A
Purge train 20 min (check when completed) ✓
Location of filter in back half 1st & 2nd Imp.

MOISTURE

	1st impinger	2nd impinger	3rd impinger	4th impinger	Silica gel
Final wt	738.7 g	684.4 g	664.2 g	____ g	947.1 g
Initial wt	695.2 g	578.1 g	640.4 g	____ g	863.0 g
Net wt	____ g	____ g	____ g	____ g	____ g

Total moisture ____ g ____ % spent

RECOVERED SAMPLE

PROBE RINSE CONTAINER I.D. 4726A ✓
IPA IMP. CONTAINER I.D. 4727A ✓ LIQUID LEVEL MARKED ____
H_2O_2 IMP. CONTAINER I.D. 4728A ✓ LIQUID LEVEL MARKED ____
BLANK CONTAINER(S) I.D. LIQUID LEVEL MARKED

IPA 4040A ✓
H_2O_2 4039A ✓ ✓
H_2O 4041A ✓
Acetone 4042A ✓

Samples stored and locked ____
Remarks ____

LABORATORY CUSTODY

Received by Lonnie White Date 11/18/82
Remarks reg. #03882

DRY MOLECULAR WEIGHT DETERMINATION

PLANT Phillips

DATE _____ TEST NO 10

SAMPLING TIME (24-hr CLOCK) _____

SAMPLING LOCATION _____

SAMPLE TYPE (BAG, INTEGRATED, CONTINUOUS) _____

ANALYTICAL METHOD _____

AMBIENT TEMPERATURE _____

OPERATOR AE

ORSAT LEAK CHECKED ✓

COMMENTS:

RUN / GAS	1		2		3		AVERAGE NET VOLUME	MULTIPLIER	MOLECULAR WEIGHT OF STACK GAS (DRY BASIS) M_d, lb/lb-mole
	ACTUAL READING	NET	ACTUAL READING	NET	ACTUAL READING	NET			
CO_2	14.6	14.6	14.6	14.6				44/100	
O_2 (NET IS ACTUAL O_2 READING MINUS ACTUAL CO_2 READING)	18.8	4.2	18.8	4.2				32/100	
CO (NET IS ACTUAL CO READING MINUS ACTUAL O_2 READING)								28/100	
N_2 (NET IS 100 MINUS ACTUAL CO READING)								28/100	
								TOTAL	

APPENDIX C

LABORATORY RESULTS

THERMOGRAVIMETRIC PARTICULATE ANALYSIS

PN 3530-14

Plant U.S. EPA - Phillips Petroleum Run No. 1AM5

Sample location Analyst C. Jones

Relative humidity 50% Density of acetone (ρa) .7908 (g/ml)

Sample type	Lab No.	Sample I.D.	Container No.	Initial Vol. (ml)	Tare Wt. (mg)
Acetone blank	CQ769		4042A	412 ml's ✓	107964.5 ✓
Acetone blank (2)					
Acetone blank (3)					
Acetone rinse	CQ739	1AM5	4043A	313 ml's ✓	105302.6 ✓
Filter blank	CQ 738		3948B	# 3450160	365.2 ✓
Filter	CQ708	1AM5	4043B	# 3450168	362.7 ✓

Analysis results (mg)*

Sample type	Lab No.	Initial wt. (ambient)	Heat to 320°F, 3 hour cool, weigh	Heat to 450°F, 3 hour cool, weigh	Heat to 600°F, 3 hour cool, weigh	Heat to 320°F, 24 hour cool, weigh	Heat to 450°F, 24 hour cool, weigh	Heat to 600°F, 24 hour cool, weigh
Acetone blank	CQ769	9.3 ✓	5.1 ✓	0.9 ✓	-0.6 ✓			
Acetone blank (2)								
Acetone blank (3)								
Acetone rinse	CQ739	131.6 ✓	42.4 ✓	23.8 ✓	18.0 ✓			
Filter blank	CQ738	0.6 ✓	0.4 ✓	0.2 ✓	0.4 ✓			
Filter	CQ708	93.0 ✓	65.6 ✓	68.5 ✓	62.0 ✓			
Total particulate		224.6 ✓	108.0 ✓	92.3 ✓	80.0 ✓			

Remarks

Data reviewed by Lauren Breen CHK

*These are net weights (gross wt. avg. minus tare wt.) without blank subtraction.

THERMOGRAVIMETRIC PARTICULATE ANALYSIS

PN 3530-14

Plant U.S. EPA - EMB - Phillips Petroleum Run No. 1BM5

Sample location Analyst C. Jones

Relative humidity 50% Density of acetone (ρa) .7908 (g/ml)

Sample type	Lab No.	Sample I.D.	Container No.	Initial Vol. (ml)	Tare Wt. (mg)
Acetone blank	CQ769		4042A	412 ml's	107964.5
Acetone blank (2)					
Acetone blank (3)					
Acetone rinse	CQ740	1BM5	4047A	280 ml's ✓	104288.9 ✓
Filter blank	CQ738		3948B	#3450160	365.2 ✓
Filter	CQ709	1BM5	4047B	# 3450177	366.8 ✓

Analysis results (mg)*

Sample type	Lab No.	Initial wt. (ambient)	Heat to 320°F, 3 hour cool, weigh	Heat to 450°F, 3 hour cool, weigh	Heat to 600°F, 3 hour cool, weigh	Heat to 320°F, 24 hour cool, weigh	Heat to 450°F, 24 hour cool, weigh	Heat to 600°F, 24 hour cool, weigh
Acetone blank	CQ769	9.3	5.1	0.9 ✓	-0.6			
Acetone blank (2)								
Acetone blank (3)								
Acetone rinse	CQ740	136.4 ✓	40.2 ✓	23.6 ✓	19.0 ✓			
Filter blank	CQ738	0.6	0.4	0.2	0.4 ✓			
Filter	CQ709	84.6 ✓	64.8 ✓	67.4 ✓	61.5 ✓			
Total particulate		221.0 ✓	105.0 ✓	91.0 ✓	80.5 ✓			

Remarks

Data reviewed by Lauren Breen LH

*These are net weights (gross wt. avg. minus tare wt.) without blank subtraction.

THERMOGRAVIMETRIC PARTICULATE ANALYSIS
PN 3530-14

Plant U.S. EPA-EMB-Phillips Petroleum Run No. 2AM5450
Sample location Analyst C. Jones
Relative humidity 50% Density of acetone (ρa) .7908 (g/ml)

Sample type	Lab No.	Sample I.D.	Container No.	Initial Vol. (ml)	Tare Wt. (mg)
Acetone blank	CQ769		4042A	412 ml's ✓	107964.5 ✓
Acetone blank (2)					
Acetone blank (3)					
Acetone rinse	CQ741	2AM5450	4060A	319 ml's ✓	110011.8 ✓
Filter blank	CQ738		3948B	#3450160	365.2 ✓
Filter	CQ710	2AM5450	4060B	#3450154	365.8 ✓

Analysis results (mg)*

Sample type	Lab No.	Initial wt. (ambient)	Heat to 320°F, 3 hour cool, weigh	Heat to 450°F, 3 hour cool, weigh	Heat to 600°F, 3 hour cool, weigh	Heat to 320°F, 24 hour cool, weigh	Heat to 450°F, 24 hour cool, weigh	Heat to 600°F, 24 hour cool, weigh
Acetone blank	CQ769	9.3 ✓	5.1 ✓	0.9 ✓	-0.6 ✓			
Acetone blank (2)								
Acetone blank (3)								
Acetone rinse	CQ741	31.4 ✓	19.0 ✓	14.2 ✓	10.8 ✓			
Filter blank	CQ738	0.6 ✓	0.4 ✓	0.2 ✓	0.4 ✓			
Filter	CQ710	38.2 ✓	37.2 ✓	36.4 ✓	35.6 ✓			
Total particulate		69.6 ✓✓	56.2 ✓✓	50.6 ✓✓	46.4 ✓✓			

Remarks

Data reviewed by Lauren Green CAK

*These are net weights (gross wt. avg. minus tare wt.) without blank subtraction.

[redacted]THERMOGRAVIMETRIC PARTICULATE ANALYSIS[redacted]

PN 3530-14

Plant U.S. EPA - EMB - Phillips Petroleum Run No. 2BM5450

Sample location _____ Analyst C. Jones

Relative humidity 50% Density of acetone (ρa) .7908 (g/ml)

Sample type	Lab No.	Sample I.D.	Container No.	Initial Vol. (ml)	Tare Wt. (mg)
Acetone blank	CQ769		4042A	412ml's ✓	107964.5 ✓
Acetone blank (2)					
Acetone blank (3)					
Acetone rinse	CQ742	2BM5450	4063A	288ml's ✓	106813.7 ✓
Filter blank	CQ738		3948B	#3450160	365.2 ✓
Filter	CQ711	2BM5450	4063B	#3450155	367.0 ✓

Analysis results (mg)*

Sample type	Lab No.	Initial wt. (ambient)	Heat to 320°F, 3 hour cool, weigh	Heat to 450°F, 3 hour cool, weigh	Heat to 600°F, 3 hour cool, weigh	Heat to 320°F, 24 hour cool, weigh	Heat to 450°F, 24 hour cool, weigh	Heat to 600°F, 24 hour cool, weigh
Acetone blank	CQ769	9.3 ✓	5.1 ✓	0.9 ✓	-0.6 ✓			
Acetone blank (2)								
Acetone blank (3)								
Acetone rinse	CQ742	25.8 ✓	15.1 ✓	8.9 ✓	5.9 ✓			
Filter blank	CQ738	0.6 ✓	0.4 ✓	0.2 ✓	0.4 ✓			
Filter	CQ711	38.5 ✓	36.4 ✓	36.0 ✓	34.5 ✓			
Total particulate		64.3 ✓✓	51.5 ✓✓	44.9 ✓✓	40.4 ✓✓			

Remarks _____

Data reviewed by Lauren Drees AK

*These are net weights (gross wt. avg. minus tare wt.) without blank subtraction.

THERMOGRAVIMETRIC PARTICULATE ANALYSIS

PN 3530-14

Plant U.S. EPA-EMB - Phillips Petroleum Run No. 2CM5B

Sample location Analyst C. Jones

Relative humidity 50% Density of acetone (ρa) .7908 (g/ml)

Sample type	Lab No.	Sample I.D.	Container No.	Initial Vol. (ml)	Tare Wt. (mg)
Acetone blank	CQ769		4042A	412 ml's ✓	1079645 ✓
Acetone blank (2)					
Acetone blank (3)					
Acetone rinse	CQ743	2CM5B	4068A	197 ml's ✓	1074247 ✓
Filter blank	CQ738		3948A	# 3450160	365.2 ✓
Filter	CQ712	2CM5B	4068B	# 3450156	366.4 ✓

Analysis results (mg)*

Sample type	Lab No.	Initial wt. (ambient)	Heat to 320°F, 3 hour cool, weigh	Heat to 450°F, 3 hour cool, weigh	Heat to 600°F, 3 hour cool, weigh	Heat to 320°F, 24 hour cool, weigh	Heat to 450°F, 24 hour cool, weigh	Heat to 600°F, 24 hour cool, weigh
Acetone blank	CQ769	9.3 ✓	5.1 ✓	0.9 ✓	-0.6 ✓			
Acetone blank (2)								
Acetone blank (3)								
Acetone rinse	CQ743	29.9 ✓	20.1 ✓	15.5 ✓	12.5 ✓			
Filter blank	CQ738	0.6 ✓	0.4 ✓	0.2 ✓	0.4 ✓			
Filter	CQ712	45.0 ✓	43.2 ✓	42.1 ✓	41.6 ✓			
Total particulate		74.9 ✓	63.3 ✓	57.6 ✓	54.1 ✓			

Remarks

Data reviewed by Lauren Drees

*These are net weights (gross wt. avg. minus tare wt.) without blank subtraction.

THERMOGRAVIMETRIC PARTICULATE ANALYSIS
PN 3530-14

Plant U.S. EPA - EMB - Phillips Petroleum Run No. 2DM5B
Sample location Analyst C. Jones
Relative humidity 50% Density of acetone (ρa) .7908 (g/ml)

Sample type	Lab No.	Sample I.D.	Container No.	Initial Vol. (ml)	Tare Wt. (mg)
Acetone blank	CQ769		4042A	412 ml's ✓	107964.5 ✓
Acetone blank (2)					
Acetone blank (3)					
Acetone rinse	CQ744	2DM5B	4057A	214 ml's ✓	104307.2 ✓
Filter blank	CQ738		3948A	# 3450160	365.2 ✓
Filter	CQ713	2DM5B	4057B	# 3450157	366.3 ✓

Analysis results (mg)*

Sample type	Lab No.	Initial wt. (ambient)	Heat to 320°F, 3 hour cool, weigh	Heat to 450°F, 3 hour cool, weigh	Heat to 600°F, 3 hour cool, weigh	Heat to 320°F, 24 hour cool, weigh	Heat to 450°F, 24 hour cool, weigh	Heat to 600°F, 24 hour cool, weigh
Acetone blank	CQ769	9.3 ✓	5.1 ✓	0.9 ✓	-0.6 ✓			
Acetone blank (2)								
Acetone blank (3)								
Acetone rinse	CQ744	30.1 ✓	19.5 ✓	14.5 ✓	11.6 ✓			
Filter blank	CQ738	0.6 ✓	0.4 ✓	0.2 ✓	0.4 ✓			
Filter	CQ713	45.5 ✓	43.3 ✓	42.5 ✓	42.0 ✓			
Total particulate		75.6 ✓	62.8 ✓	57.0 ✓	53.6 ✓			

Remarks
Data reviewed by Lauren Drees LDE

*These are net weights (gross wt. avg. minus tare wt.) without blank subtraction.

THERMOGRAVIMETRIC PARTICULATE ANALYSIS
PN 3530-14

Plant U.S. EPA - EMB - Phillips Peteoleum Run No. 3CM5
Sample location Analyst C. Jones
Relative humidity 50% Density of acetone (ρa) .7908 (g/ml)

Sample type	Lab No.	Sample I.D.	Container No.	Initial Vol. (ml)	Tare Wt. (mg)
Acetone blank	CQ769		4042A	412 ml's	107964.5
Acetone blank (2)					
Acetone blank (3)					
Acetone rinse	CQ745	3CM5	4072 A	274 ml's	105587.7
Filter blank	CQ738		3948B	#3450160	365.2
Filter	CQ714	3CM5	4072B	#3450176	366.8

Analysis results (mg)*

Sample type	Lab No.	Initial wt. (ambient)	Heat to 320°F, 3 hour cool, weigh	Heat to 450°F, 3 hour cool, weigh	Heat to 600°F, 3 hour cool, weigh	Heat to 320°F, 24 hour cool, weigh	Heat to 450°F, 24 hour cool, weigh	Heat to 600°F, 24 hour cool, weigh
Acetone blank	CQ769	9.3	5.1	0.9	-0.6			
Acetone blank (2)								
Acetone blank (3)								
Acetone rinse	CQ745	131.6	—	40.0	31.5			
Filter blank	CQ738	0.6	0.4	0.2	0.4			
Filter	CQ714	112.2	—	91.9	80.8			
Total particulate		243.8	—	131.9	112.3			

Remarks
Data reviewed by Lauren Drees CK

*These are net weights (gross wt. avg. minus tare wt.) without blank subtraction.

THERMOGRAVIMETRIC PARTICULATE ANALYSIS

PN 3530-14

Plant U.S. EPA-EMB-Phillip Petroleum Run No. 3DM5

Sample location Analyst C. Jones

Relative humidity 50% Density of acetone (ρa) .7908 (g/ml)

Sample type	Lab No.	Sample I.D.	Container No.	Initial Vol. (ml)	Tare Wt. (mg)
Acetone blank	CQ769		4042A	412 ml's	1079645
Acetone blank (2)					
Acetone blank (3)					
Acetone rinse	CQ746	3DM5	4071A	382 ml's	1053667
Filter blank	CQ738		3948B	#3450160	365.2
Filter	CQ715	3DM5	4071B	#3450162	364.0

Analysis results (mg)*

Sample type	Lab No.	Initial wt. (ambient)	Heat to 320°F, 3 hour cool, weigh	Heat to 450°F, 3 hour cool, weigh	Heat to 600°F, 3 hour cool, weigh	Heat to 320°F, 24 hour cool, weigh	Heat to 450°F, 24 hour cool, weigh	Heat to 600°F, 24 hour cool, weigh
Acetone blank	CQ769	9.3	5.1	0.9	-0.6			
Acetone blank (2)								
Acetone blank (3)								
Acetone rinse	CQ746	141.3	—	40.5	34.1			
Filter blank	CQ738	0.6	0.4	0.2	0.4			
Filter	CQ715	119.0	—	101.6	81.4			
Total particulate		260.3	—	142.1	115.5			

Remarks

Data reviewed by Lauren Drees CHC

*These are net weights (gross wt. avg. minus tare wt.) without blank subtraction.

THERMOGRAVIMETRIC PARTICULATE ANALYSIS
PN 3530-14

Plant U.S. EPA-EMB- Phillips Petroleum Run No. 4AM5450
Sample location Analyst C. Jones
Relative humidity 50% Density of acetone (ρa) .7908 (g/ml)

Sample type	Lab No.	Sample I.D.	Container No.	Initial Vol. (ml)	Tare Wt. (mg)
Acetone blank	CQ769		4042A	412 ml's	107964.5
Acetone blank (2)					
Acetone blank (3)					
Acetone rinse	CQ747	4AM5450	4081A	498 ml's	106967.2
Filter blank	CQ738		3948B	#3450160	365.2
Filter	CQ716	4AM5450	4081B	#3450222	351.4

Analysis results (mg)*

Sample type	Lab No.	Initial wt. (ambient)	Heat to 320°F, 3 hour cool, weigh	Heat to 450°F, 3 hour cool, weigh	Heat to 600°F, 3 hour cool, weigh	Heat to 320°F, 24 hour cool, weigh	Heat to 450°F, 24 hour cool, weigh	Heat to 600°F, 24 hour cool, weigh
Acetone blank	CQ769	9.3	5.1	0.9	-0.6			
Acetone blank (2)								
Acetone blank (3)								
Acetone rinse	CQ747	69.0						14.0
Filter blank	CQ738	0.6	0.4	0.2	0.4			
Filter	CQ716	37.6						32.8
Total particulate		106.6						46.8

Remarks
Data reviewed by Lauren Drees CHC

*These are net weights (gross wt. avg. minus tare wt.) without blank subtraction.

THERMOGRAVIMETRIC PARTICULATE ANALYSIS

PN 3530-14

Plant U.S. EPA - EMB - Phillips Petroleum Run No. 4BM5450

Sample location Analyst C. Jones

Relative humidity 50% Density of acetone (ρa) .7908 (g/ml)

Sample type	Lab No.	Sample I.D.	Container No.	Initial Vol. (ml)	Tare Wt. (mg)
Acetone blank	CQ769		4042A	412 ml's	107964.5
Acetone blank (2)					
Acetone blank (3)					
Acetone rinse	CQ748	4BM5450	4084A	433 ml's	107255.5
Filter blank	CQ738		3948B	#3450160	365.2
Filter	CQ717	4BM5450	4084B	#3450221	346.7

Analysis results (mg)*

Sample type	Lab No.	Initial wt. (ambient)	Heat to 320°F, 3 hour cool, weigh	Heat to 450°F, 3 hour cool, weigh	Heat to 600°F, 3 hour cool, weigh	Heat to 320°F, 24 hour cool, weigh	Heat to 450°F, 24 hour cool, weigh	Heat to 600°F, 24 hour cool, weigh
Acetone blank	CQ769	9.3	5.1	0.9	-0.6			
Acetone blank (2)								
Acetone blank (3)								
Acetone rinse	CQ748	26.5	—	—	10.3			
Filter blank	CQ738	0.6	0.4	0.2	0.4			
Filter	CQ717	39.4	—	—	36.7			
Total particulate		65.9	—	—	47.0			

Remarks

Data reviewed by Lauren Drees CHC

*These are net weights (gross wt. avg. minus tare wt.) without blank subtraction.

THERMOGRAVIMETRIC PARTICULATE ANALYSIS
PN 3530-14

Plant U.S. EPA-EMB-Phillips Petroleum Run No. 4CM5B
Sample location Analyst C. Jones
Relative humidity 50% Density of acetone (ρa) .7908 (g/ml)

Sample type	Lab No.	Sample I.D.	Container No.	Initial Vol. (ml)	Tare Wt. (mg)
Acetone blank	CQ769		4042A	412 ml's	107964.5
Acetone blank (2)					
Acetone blank (3)					
Acetone rinse	CQ749	4CM5B	4087A	438 ml's	105731.8
Filter blank	CQ738		3948B	# 3450160	365.2
Filter	CQ718	4CM5B	4087B	# 3450223	348.8

Analysis results (mg)*

Sample type	Lab No.	Initial wt. (ambient)	Heat to 320°F, 3 hour cool, weigh	Heat to 450°F, 3 hour cool, weigh	Heat to 600°F, 3 hour cool, weigh	Heat to 320°F, 24 hour cool, weigh	Heat to 450°F, 24 hour cool, weigh	Heat to 600°F, 24 hour cool, weigh
Acetone blank	CQ769	9.3	5.1	0.9	-0.6			
Acetone blank (2)								
Acetone blank (3)								
Acetone rinse	CQ749	35.8	—	—	14.6			
Filter blank	CQ738	0.6	0.4	0.2	0.4			
Filter	CQ718	44.6	—	—	41.6			
Total particulate		80.4	—	—	56.2			

Remarks
Data reviewed by Lauren Drees CHK

*These are net weights (gross wt. avg. minus tare wt.) without blank subtraction.

[redacted]THERMOGRAVIMETRIC [redacted]PARTICULATE [redacted]ANALYSIS[redacted]

PN 3530-14

Plant U.S. EPA-EMB-Phillips Petroleum Run No. 4DM5B

Sample location Analyst C. JONES

Relative humidity 50% Density of acetone (ρa) .7908 (g/ml)

Sample type	Lab No.	Sample I.D.	Container No.	Initial Vol. (ml)	Tare Wt. (mg)
Acetone blank	CQ769		4042A	412 mls	107964.5
Acetone blank (2)					
Acetone blank (3)					
Acetone rinse	CQ750	4DM5B	4091A	363 mls ✓	104103.3 ✓
Filter blank	CQ738		3948B	#3450160	365.2 ✓
Filter	CQ719	4DM5B	4091B	#3460219	347.8 ✓

Analysis results (mg)*

Sample type	Lab No.	Initial wt. (ambient)	Heat to 320°F, 3 hour cool, weigh	Heat to 450°F, 3 hour cool, weigh	Heat to 600°F, 3 hour cool, weigh	Heat to 320°F, 24 hour cool, weigh	Heat to 450°F, 24 hour cool, weigh	Heat to 600°F, 24 hour cool, weigh
Acetone blank	CQ769	9.3	5.1	0.9	-0.6			
Acetone blank (2)								
Acetone blank (3)								
Acetone rinse	CQ750	55.9 ✓	—	—	17.8 ✓			
Filter blank	CQ738	0.6	0.4	0.2	0.4			
Filter	CQ719	42.0 ✓	—	—	39.4 ✓			
Total particulate		97.9 ✓✓	—	—	57.2 ✓✓			

Remarks

Data reviewed by Lauren Drees CHC

*These are net weights (gross wt. avg. minus tare wt.) without blank subtraction.

THERMOGRAVIMETRIC PARTICULATE ANALYSIS
PN 3530-14

Plant U.S. EPA - EMB - Phillip Petroleum Run No. 5AM5
Sample location Analyst C. JONES
Relative humidity 50% Density of acetone (pa) .7908 (g/ml)

Sample type	Lab No.	Sample I.D.	Container No.	Initial Vol. (ml)	Tare Wt. (mg)
Acetone blank	CQ769		4042A	412 ml's	107964.5
Acetone blank (2)					
Acetone blank (3)					
Acetone rinse	CQ751	5AM5	4094A	268 ml's	103993.1
Filter blank	CQ738		3948B	#3450160	365.2
Filter	CQ720	5AM5	4094B	# 3450107	336.2

Analysis results (mg)*

Sample type	Lab No.	Initial wt. (ambient)	Heat to 320°F, 3 hour cool, weigh	Heat to 450°F, 3 hour cool, weigh	Heat to 600°F, 3 hour cool, weigh	Heat to 320°F, 24 hour cool, weigh	Heat to 450°F, 24 hour cool, weigh	Heat to 600°F, 24 hour cool, weigh
Acetone blank	CQ769	9.3	5.1	0.9	-0.6			
Acetone blank (2)								
Acetone blank (3)								
Acetone rinse	CQ751	134.3				27.5	15.1	12.8
Filter blank	CQ738	0.6	0.4	0.2	0.4			
Filter	CQ720	62.6				42.0	40.6	38.6
Total particulate		196.9				69.5	55.7	51.4

Remarks

Data reviewed by Lauren Dress CHC

*These are net weights (gross wt. avg. minus tare wt.) without blank subtraction.

[redacted] [redacted] [redacted] [redacted] [redacted]
PN 3530-14

Plant U.S. EPA-EMB-Phillip Petroleum Run No. 5BM5
Sample location Analyst C. Jones
Relative humidity 50% Density of acetone (ρa) .7908 (g/ml)

Sample type	Lab No.	Sample I.D.	Container No.	Initial Vol. (ml)	Tare Wt. (mg)
Acetone blank	CQ769		4042A	412 ml's ✓	107964.5
Acetone blank (2)					
Acetone blank (3)					
Acetone rinse	CQ752	5BM5	4097A	304 ml's ✓	104462.6 ✓
Filter blank	CQ738		3948B	# 3450160	365.2
Filter	CQ721	5BM5	4097B	# 3450106	337.1 ✓

Analysis results (mg)*

Sample type	Lab No.	Initial wt. (ambient)	Heat to 320°F, 3 hour cool, weigh	Heat to 450°F, 3 hour cool, weigh	Heat to 600°F, 3 hour cool, weigh	Heat to 320°F, 24 hour cool, weigh	Heat to 450°F, 24 hour cool, weigh	Heat to 600°F, 24 hour cool, weigh
Acetone blank	CQ769	9.3 ✓	5.1 ✓	0.9 ✓	-0.6 ✓			
Acetone blank (2)								
Acetone blank (3)								
Acetone rinse	CQ752	47.5 ✓	14.2 ✓	9.6 ✓	5.5 ✓			
Filter blank	CQ738	0.6 ✓	0.4 ✓	0.2 ✓	0.4 ✓			
Filter	CQ721	40.7 ✓	34.9 ✓	34.1 ✓	32.7 ✓			
Total particulate		88.2 ✓✓	49.1 ✓✓	43.7 ✓✓	38.2 ✓✓			

Remarks

Data reviewed by Lauren Drees CHC

*These are net weights (gross wt. avg. minus tare wt.) without blank subtraction.

THERMOGRAVIMETRIC PARTICULATE ANALYSIS
PN 3530-14

Plant U.S. EPA-EMB- Phillip Petroleum Run No. 6AM5450
Sample location Analyst C. Jones
Relative humidity 50% Density of acetone (ρa) .7908 (g/ml)

Sample type	Lab No.	Sample I.D.	Container No.	Initial Vol. (ml)	Tare Wt. (mg)
Acetone blank	CQ769		4042A	412 ml's	107964.5
Acetone blank (2)					
Acetone blank (3)					
Acetone rinse	CQ753	6AM5450	4106A	309 ml's ✓	106849.5 ✓
Filter blank	CQ738		3948B	#3450160	365.2
Filter	CQ722	6AM5450	4106B	#3450226	346.6 ✓

Analysis results (mg)*

Sample type	Lab No.	Initial wt. (ambient)	Heat to 320°F, 3 hour cool, weigh	Heat to 450°F, 3 hour cool, weigh	Heat to 600°F, 3 hour cool, weigh	Heat to 320°F, 24 hour cool, weigh	Heat to 450°F, 24 hour cool, weigh	Heat to 600°F, 24 hour cool, weigh
Acetone blank	CQ769	9.3	5.1	0.9	-0.6			
Acetone blank (2)								
Acetone blank (3)								
Acetone rinse	CQ753	24.9 ✓	—	14.3 ✓	12.0 ✓			
Filter blank	CQ738	0.6	0.4	0.2	0.4			
Filter	CQ722	34.2 ✓	—	32.4 ✓	31.6 ✓			
Total particulate		59.1 ✓	—	46.7 ✓	43.6 ✓			

Remarks
Data reviewed by Lauren Dress CHK

*These are net weights (gross wt. avg. minus tare wt.) without blank subtraction.

THERMOGRAVIMETRIC PARTICULATE ANALYSIS

PN 3530-14

Plant U.S. EPA-EMB-Phillip Petroleum Run No. 6BM5450

Sample location Analyst C. Jones

Relative humidity 50% Density of acetone (ρa) .7908 (g/ml)

Sample type	Lab No.	Sample I.D.	Container No.	Initial Vol. (ml)	Tare Wt. (mg)
Acetone blank	CQ769		4042A	412 ml's	107964.5
Acetone blank (2)					
Acetone blank (3)					
Acetone rinse	CQ754	6BM5450	4109A	296 ml's	106082.1
Filter blank	CQ738		3948B	#3450160	365.2
Filter	CQ723	6BM5450	4109B	#3450216	346.2

Analysis results (mg)*

Sample type	Lab No.	Initial wt. (ambient)	Heat to 320°F, 3 hour cool, weigh	Heat to 450°F, 3 hour cool, weigh	Heat to 600°F, 3 hour cool, weigh	Heat to 320°F, 24 hour cool, weigh	Heat to 450°F, 24 hour cool, weigh	Heat to 600°F, 24 hour cool, weigh
Acetone blank	CQ769	9.3	5.1	0.9	-0.6			
Acetone blank (2)								
Acetone blank (3)								
Acetone rinse	CQ754	39.5	—	18.5	15.3			
Filter blank	CQ738	0.6	0.4	0.2	0.4			
Filter	CQ723	35.0	—	33.8	33.1			
Total particulate		74.5	—	52.3	48.4			

Remarks

Data reviewed by Lauren Drees CHC

*These are net weights (gross wt. avg. minus tare wt.) without blank subtraction.

THERMOGRAVIMETRIC PARTICULATE ANALYSIS
PN 3530-14

Plant U.S. EPA-EMB- Phillip Petroleum Run No. 6CMSB
Sample location Analyst C. Jones
Relative humidity 50% Density of acetone (ρa) .7908 (g/ml)

Sample type	Lab No.	Sample I.D.	Container No.	Initial Vol. (ml)	Tare Wt. (mg)
Acetone blank	CQ769		4042A	412 ml's	107964.5
Acetone blank (2)					
Acetone blank (3)					
Acetone rinse	CQ755	6CMSB	4112A	278 ml's	105295.0
Filter blank	CQ738		3948B	#3450160	365.2
Filter	CQ724	6CMSB	4112B	#3450227	351.8

Analysis results (mg)*

Sample type	Lab No.	Initial wt. (ambient)	Heat to 320°F, 3 hour cool, weigh	Heat to 450°F, 3 hour cool, weigh	Heat to 600°F, 3 hour cool, weigh	Heat to 320°F, 24 hour cool, weigh	Heat to 450°F, 24 hour cool, weigh	Heat to 600°F, 24 hour cool, weigh
Acetone blank	CQ769	9.3	5.1	0.9	-0.6			
Acetone blank (2)								
Acetone blank (3)								
Acetone rinse	CQ755	35.3	—	16.1	14.1			
Filter blank	CQ738	0.6	0.4	0.2	0.4			
Filter	CQ724	43.3	—	40.4	38.8			
Total particulate		78.6	—	56.5	52.9			

Remarks
Data reviewed by Lauren Dreer CHC

*These are net weights (gross wt. avg. minus tare wt.) without blank subtraction.

THERMOGRAVIMETRIC PARTICULATE ANALYSIS
PN 3530-14

Plant U.S. EPA-EMB-Phillip Petroleum Run No. 6DMSB
Sample location Analyst C. Jones
Relative humidity 50% Density of acetone (ρa) .7908 (g/ml)

Sample type	Lab No.	Sample I.D.	Container No.	Initial Vol. (ml)	Tare Wt. (mg)
Acetone blank	CQ769		4042A	412ml's	107964.5
Acetone blank (2)					
Acetone blank (3)					
Acetone rinse	CQ756	6DMSB	4115A	307ml's	105067.8
Filter blank	CQ738		3948B	#3450160	365.2
Filter	CQ725	6DMSB	4115B	#3450228	344.4

Analysis results (mg)*

Sample type	Lab No.	Initial wt. (ambient)	Heat to 320°F, 3 hour cool, weigh	Heat to 450°F, 3 hour cool, weigh	Heat to 600°F, 3 hour cool, weigh	Heat to 320°F, 24 hour cool, weigh	Heat to 450°F, 24 hour cool, weigh	Heat to 600°F, 24 hour cool, weigh
Acetone blank	CQ769	9.3	5.1	0.9	-0.6			
Acetone blank (2)								
Acetone blank (3)								
Acetone rinse	CQ756	22.8	—	12.6	10.6			
Filter blank	CQ738	0.6	0.4	0.2	0.4			
Filter	CQ725	40.4	—	38.4	36.6			
Total particulate		63.2	—	51.0	47.2			

Remarks
Data reviewed by Lauren Drees CHC

*These are net weights (gross wt. avg. minus tare wt.) without blank subtraction.

THERMOGRAVIMETRIC PARTICULATE ANALYSIS
PN 3530-14

Plant U.S. EPA-EMB-Phillip Petroleum Run No. 7AMSB
Sample location Analyst C. Jones
Relative humidity 50% Density of acetone (ρa) .7908 (g/ml)

Sample type	Lab No.	Sample I.D.	Container No.	Initial Vol. (ml)	Tare Wt. (mg)
Acetone blank	CQ769		4042A	412ml's	107964.5
Acetone blank (2)					
Acetone blank (3)					
Acetone rinse	CQ757	7AMSB	4121A	323ml's	106319.6
Filter blank	CQ738		3948B	# 3450160	365.2
Filter	CQ726	7AMSB	4121B	# 3450147	363.6

Analysis results (mg)*

Sample type	Lab No.	Initial wt. (ambient)	Heat to 320°F, 3 hour cool, weigh	Heat to 450°F, 3 hour cool, weigh	Heat to 600°F, 3 hour cool, weigh	Heat to 320°F, 24 hour cool, weigh	Heat to 450°F, 24 hour cool, weigh	Heat to 600°F, 24 hour cool, weigh
Acetone blank	CQ769	9.3	5.1	0.9	-0.6			
Acetone blank (2)								
Acetone blank (3)								
Acetone rinse	CQ757	22.3	16.4	12.4	11.0			
Filter blank	CQ738	0.6	0.4	0.2	0.4			
Filter	CQ726	25.8	24.8	23.6	23.2			
Total particulate		48.1	41.2	36.0	34.2			

Remarks
Data reviewed by Lauren Drees Cfe

*These are net weights (gross wt. avg. minus tare wt.) without blank subtraction.

THERMOGRAVIMETRIC PARTICULATE ANALYSIS

PN 3530-14

Plant U.S. EPA-EMB-Phillip Petroleum Run No. 7BMSB

Sample location Analyst C. Jones

Relative humidity 50% Density of acetone (ρa) .7908 (g/ml)

Sample type	Lab No.	Sample I.D.	Container No.	Initial Vol. (ml)	Tare Wt. (mg)
Acetone blank	CQ769		4042A	412 ml's	107964.5
Acetone blank (2)					
Acetone blank (3)					
Acetone rinse	CQ758	7BMSB	4124A	306 ml's	102496.8
Filter blank	CQ738		3948B	#3450160	365.2
Filter	CQ727	7BMSB	4124B	#3450145	369.2

Analysis results (mg)*

Sample type	Lab No.	Initial wt. (ambient)	Heat to 320°F, 3 hour cool, weigh	Heat to 450°F, 3 hour cool, weigh	Heat to 600°F, 3 hour cool, weigh	Heat to 320°F, 24 hour cool, weigh	Heat to 450°F, 24 hour cool, weigh	Heat to 600°F, 24 hour cool, weigh
Acetone blank	CQ769	9.3	5.1	0.9	-0.6			
Acetone blank (2)								
Acetone blank (3)								
Acetone rinse	CQ758	41.4				20.2	15.4	13.9
Filter blank	CQ738	0.6	0.4	0.2	0.4			
Filter	CQ727	27.4				26.0	24.3	22.8
Total particulate		68.8				46.2	39.7	36.7

Remarks

Data reviewed by Lauren Drees CHK

*These are net weights (gross wt. avg. minus tare wt.) without blank subtraction.

THERMOGRAVIMETRIC PARTICULATE ANALYSIS
PN 3530-14

Plant U.S. EPA-EMB-Phillip Petroleum Run No. 8AM5450
Sample location Analyst C. Jones
Relative humidity 50% Density of acetone (ρa) .7908 (g/ml)

Sample type	Lab No.	Sample I.D.	Container No.	Initial Vol. (ml)	Tare Wt. (mg)
Acetone blank	CQ769		4042A	412 ml's	107964.5
Acetone blank (2)					
Acetone blank (3)					
Acetone rinse	CQ759	8AM5450	4130A	378 ml's	104027.5
Filter blank	CQ738		3948B	#3450160	365.2
Filter	CQ728	8AM5450	4130B	#3450137	365.8

Analysis results (mg)*

Sample type	Lab No.	Initial wt. (ambient)	Heat to 320°F, 3 hour cool, weigh	Heat to 450°F, 3 hour cool, weigh	Heat to 600°F, 3 hour cool, weigh	Heat to 320°F, 24 hour cool, weigh	Heat to 450°F, 24 hour cool, weigh	Heat to 600°F, 24 hour cool, weigh
Acetone blank	CQ769	9.3	5.1	0.9	-0.6			
Acetone blank (2)								
Acetone blank (3)								
Acetone rinse	CQ759	35.0	—	24.3	22.3			
Filter blank	CQ738	0.6	0.4	0.2	0.4			
Filter	CQ728	49.7	—	48.5	47.1			
Total particulate		84.7	—	72.8	69.4			

Remarks
Data reviewed by Lauren Drees CHC

*These are net weights (gross wt. avg. minus tare wt.) without blank subtraction.

THERMOGRAVIMETRIC PARTICULATE ANALYSIS

PN 3530-14

Plant U.S. EPA - EMB - Phillips Petroleum Run No. 8BM5450

Sample location _____ Analyst C. Jones

Relative humidity 50% Density of acetone (ρa) .7908 (g/ml)

Sample type	Lab No.	Sample I.D.	Container No.	Initial Vol. (ml)	Tare Wt. (mg)
Acetone blank	CQ769		4042A	412 ml's ✓	107964.5 ✓
Acetone blank (2)					
Acetone blank (3)					
Acetone rinse	CQ760	8BM5450	4133A	403 ml's ✓	105578.0 ✓
Filter blank	CQ738		3948B	#3450160	365.2
Filter	CQ729	8BM5450	4133B	#3450171	359.4 ✓

Analysis results (mg)*

Sample type	Lab No.	Initial wt. (ambient)	Heat to 320°F, 3 hour cool, weigh	Heat to 450°F, 3 hour cool, weigh	Heat to 600°F, 3 hour cool, weigh	Heat to 320°F, 24 hour cool, weigh	Heat to 450°F, 24 hour cool, weigh	Heat to 600°F, 24 hour cool, weigh
Acetone blank	CQ769	9.3	5.1	0.9	-0.6			
Acetone blank (2)								
Acetone blank (3)								
Acetone rinse	CQ760	28.4 ✓	—	—	17.6 ✓			
Filter blank	CQ738	0.6	0.4	0.2	0.4			
Filter	CQ729	56.8 ✓	—	—	53.7 ✓			
Total particulate		85.2 ✓	—	—	71.3 ✓			

Remarks _____

Data reviewed by Lauren Dress LHK

*These are net weights (gross wt. avg. minus tare wt.) without blank subtraction.

THERMOGRAVIMETRIC PARTICULATE ANALYSIS

PN 3530-14

Plant U.S. EPA-EMB-Phillip Petroleum Run No. 9AM5

Sample location Analyst C. Jones

Relative humidity 50% Density of acetone (ρa) .7908 (g/ml)

Sample type	Lab No.	Sample I.D.	Container No.	Initial Vol. (ml)	Tare Wt. (mg)
Acetone blank	CQ769		4042A	412 ml's ✓	107964.5 ✓
Acetone blank (2)					
Acetone blank (3)					
Acetone rinse	CQ761	9AM5	4142A	274 ml's ✓	104344.1 ✓
Filter blank	CQ738		3948B	#3450160	365.2 ✓
Filter	CQ730	9AM5	4142B	#3450207	368.2 ✓

Analysis results (mg)*

Sample type	Lab No.	Initial wt. (ambient)	Heat to 320°F, 3 hour cool, weigh	Heat to 450°F, 3 hour cool, weigh	Heat to 600°F, 3 hour cool, weigh	Heat to 320°F, 24 hour cool, weigh	Heat to 450°F, 24 hour cool, weigh	Heat to 600°F, 24 hour cool, weigh
Acetone blank	CQ769	9.3 ✓	5.1 ✓	0.9 ✓	-0.6 ✓			
Acetone blank (2)								
Acetone blank (3)								
Acetone rinse	CQ761	196.0 ✓	—	—	28.4 ✓			
Filter blank	CQ738	0.6 ✓	0.4 ✓	0.2 ✓	0.4 ✓			
Filter	CQ730	84.6 ✓	—	—	44.6 ✓			
Total particulate		280.6 ✓✓	—	—	73.0 ✓✓			

Remarks

Data reviewed by Lauren Green CHK

*These are net weights (gross wt. avg. minus tare wt.) without blank subtraction.

THERMOGRAVIMETRIC PARTICULATE ANALYSIS
PN 3530-14

Plant U.S. EPA - EMB - Phillips Petroleum Run No. 9BMS
Sample location Analyst C. JONES
Relative humidity 50% Density of acetone (ρa) .7908 (g/ml)

Sample type	Lab No.	Sample I.D.	Container No.	Initial Vol. (ml)	Tare Wt. (mg)
Acetone blank	CQ769		4042A	412 ml's ✓	107964.5 ✓
Acetone blank (2)					
Acetone blank (3)					
Acetone rinse	CQ762	9BMS	4145A	316 ml's ✓	110328.6 ✓
Filter blank	CQ738		3948B	#3450160	365.2 ✓
Filter	CQ731	9BMS	4145B	#3450205	365.0 ✓

Analysis results (mg)*

Sample type	Lab No.	Initial wt. (ambient)	Heat to 320°F, 3 hour cool, weigh	Heat to 450°F, 3 hour cool, weigh	Heat to 600°F, 3 hour cool, weigh	Heat to 320°F, 24 hour cool, weigh	Heat to 450°F, 24 hour cool, weigh	Heat to 600°F, 24 hour cool, weigh
Acetone blank	CQ769	9.3 ✓	5.1 ✓	0.9 ✓	-0.6 ✓			
Acetone blank (2)								
Acetone blank (3)								
Acetone rinse	CQ762	171.0 ✓	—	—	19.0 ✓			
Filter blank	CQ738	0.6 ✓	0.4 ✓	0.2 ✓	0.4 ✓			
Filter	CQ731	74.4 ✓	—	—	40.6 ✓			
Total particulate		245.4 ✓✓	—	—	59.6 ✓✓			

Remarks
Data reviewed by Lauren Drees LHC

*These are net weights (gross wt. avg. minus tare wt.) without blank subtraction.

THERMOGRAVIMETRIC PARTICULATE ANALYSIS
PN 3530-14

Plant U.S. EPA-EMB-Phillips Petroleum Run No. 9CMSB
Sample location Analyst C. Jones
Relative humidity 50% Density of acetone (ρa) .7908 (g/ml)

Sample type	Lab No.	Sample I.D.	Container No.	Initial Vol. (ml)	Tare Wt. (mg)
Acetone blank	CQ769		4042A	412 ml's	107964.5
Acetone blank (2)					
Acetone blank (3)					
Acetone rinse	CQ763	9CMSB	4148A	314 ml's	106086.0
Filter blank	CQ738		3948B	#3450160	365.2
Filter	CQ732	9CMSB	4148B	#3450206	364.9

Analysis results (mg)*

Sample type	Lab No.	Initial wt. (ambient)	Heat to 320°F, 3 hour cool, weigh	Heat to 450°F, 3 hour cool, weigh	Heat to 600°F, 3 hour cool, weigh	Heat to 320°F, 24 hour cool, weigh	Heat to 450°F, 24 hour cool, weigh	Heat to 600°F, 24 hour cool, weigh
Acetone blank	CQ769	9.3	5.1	0.9	-0.6			
Acetone blank (2)								
Acetone blank (3)								
Acetone rinse	CQ763	26.1				19.2	15.4	14.6
Filter blank	CQ738	0.6	0.4	0.2	0.4			
Filter	CQ732	37.1				34.4	32.3	29.9
Total particulate		63.2				53.6	47.7	44.5

Remarks

Data reviewed by Lauren Drees CHC

*These are net weights (gross wt. avg. minus tare wt.) without blank subtraction.

THERMOGRAVIMETRIC PARTICULATE ANALYSIS

PN 3530-14

Plant U.S. EPA-EMB-Phillips Petroleum Run No. 9DM5B

Sample location _____ Analyst C. Jones

Relative humidity 50% Density of acetone (ρa) .7908 (g/ml)

Sample type	Lab No.	Sample I.D.	Container No.	Initial Vol. (ml)	Tare Wt. (mg)
Acetone blank	CQ769		4024A	412ml's ✓	107964.5 ✓
Acetone blank (2)					
Acetone blank (3)					
Acetone rinse	CQ764	9DM5B	4151A	383ml's ✓	104767.8 ✓
Filter blank	CQ738		3948B	#3450160	365.2 ✓
Filter	CQ733	9DM5B	4151B	3450208	368.0 ✓

Analysis results (mg)*

Sample type	Lab No.	Initial wt. (ambient)	Heat to 320°F, 3 hour cool, weigh	Heat to 450°F, 3 hour cool, weigh	Heat to 600°F, 3 hour cool, weigh	Heat to 320°F, 24 hour cool, weigh	Heat to 450°F, 24 hour cool, weigh	Heat to 600°F, 24 hour cool, weigh
Acetone blank	CQ769	9.3 ✓	5.1 ✓	0.9 ✓	-0.6 ✓			
Acetone blank (2)								
Acetone blank (3)								
Acetone rinse	CQ764	15.0 ✓	10.6 ✓	8.0 ✓	6.3 ✓			
Filter blank	CQ738	0.6 ✓	0.4 ✓	0.2 ✓	0.4 ✓			
Filter	CQ733	42.5 ✓	41.1 ✓	40.6 ✓	39.8 ✓			
Total particulate		57.5 ✓	51.7 ✓	48.6 ✓	46.1 ✓			

Remarks _____

Data reviewed by Lauren Drees CHC

*These are net weights (gross wt. avg. minus tare wt.) without blank subtraction.

THERMOGRAVIMETRIC PARTICULATE ANALYSIS
PN 3530-14

Plant U.S. EPA-EMB-Phillip Petroleum Run No. 10AMS450
Sample location Analyst C. Jones
Relative humidity 50% Density of acetone (ρa) .7908 (g/ml)

Sample type	Lab No.	Sample I.D.	Container No.	Initial Vol. (ml)	Tare Wt. (mg)
Acetone blank	CQ769		4024A	412 ml's ✓	107964.5 ✓
Acetone blank (2)					
Acetone blank (3)					
Acetone rinse	CQ765	10AMS450	4717A	297 ml's ✓	105152.2 ✓
Filter blank	CQ738		3948B	#3450160	365.2 ✓
Filter	CQ734	10AMS450	4717B	3450200	362.8 ✓

Analysis results (mg)*

Sample type	Lab No.	Initial wt. (ambient)	Heat to 320°F, 3 hour cool, weigh	Heat to 450°F, 3 hour cool, weigh	Heat to 600°F, 3 hour cool, weigh	Heat to 320°F, 24 hour cool, weigh	Heat to 450°F, 24 hour cool, weigh	Heat to 600°F, 24 hour cool, weigh
Acetone blank	CQ769	9.3 ✓	5.1 ✓	0.9 ✓	-0.6 ✓			
Acetone blank (2)								
Acetone blank (3)								
Acetone rinse	CQ765	20.9 ✓	—	9.5 ✓	8.2 ✓			
Filter blank	CQ738	0.6 ✓	0.4 ✓	0.2 ✓	0.4 ✓			
Filter	CQ734	24.2 ✓	—	23.0 ✓	22.2 ✓			
Total particulate		45.1 ✓✓	—	32.5 ✓✓	30.4 ✓✓			

Remarks
Data reviewed by Lauren Green CHC

*These are net weights (gross wt. avg. minus tare wt.) without blank subtraction.

[redacted]

THERMOGRAVIMETRIC PARTICULATE ANALYSIS

PN 3530-14

Plant U.S. EPA-EMB - Phillip Peteoleum Run No. 108M5450

Sample location _____ Analyst C. Jones

Relative humidity 50% Density of acetone (ρa) .7908 (g/ml)

Sample type	Lab No.	Sample I.D.	Container No.	Initial Vol. (ml)	Tare Wt. (mg)
Acetone blank	CQ769		4024A	412 ml's ✓	107964.5 ✓
Acetone blank (2)					
Acetone blank (3)					
Acetone rinse	CQ766	108M5450	4720A	403 ml's ✓	106747.6 ✓
Filter blank	CQ738		3948B	#3450160	365.2 ✓
Filter	CQ735	108M5450	4720B	# 3450199	365.1 ✓

Analysis results (mg)*

Sample type	Lab No.	Initial wt. (ambient)	Heat to 320°F, 3 hour cool, weigh	Heat to 450°F, 3 hour cool, weigh	Heat to 600°F, 3 hour cool, weigh	Heat to 320°F, 24 hour cool, weigh	Heat to 450°F, 24 hour cool, weigh	Heat to 600°F, 24 hour cool, weigh
Acetone blank	CQ769	9.3 ✓	5.1 ✓	0.9 ✓	-0.6 ✓			
Acetone blank (2)								
Acetone blank (3)								
Acetone rinse	CQ766	21.5 ✓	—	—	10.2 ✓			
Filter blank	CQ738	0.6 ✓	0.4 ✓	0.2 ✓	0.4 ✓			
Filter	CQ735	23.3 ✓	—	—	20.2 ✓			
Total particulate		44.8 ✓	—	—	30.4 ✓			

Remarks _____

Data reviewed by Lauren Drees CHK

*These are net weights (gross wt. avg. minus tare wt.) without blank subtraction.

THERMOGRAVIMETRIC PARTICULATE ANALYSIS
PN 3530-14

Plant U.S. EPA-EMB-Phillips Petroleum Run No. 10CMSB
Sample location Analyst C. Jones
Relative humidity 50% Density of acetone (ρa) .7908 (g/ml)

Sample type	Lab No.	Sample I.D.	Container No.	Initial Vol. (ml)	Tare Wt. (mg)
Acetone blank	CQ769		4024A	412 ml's ✓	107964.5 ✓
Acetone blank (2)					
Acetone blank (3)					
Acetone rinse	CQ767	10CMSB	4723A	258 ml's ✓	106278.6 ✓
Filter blank	CQ738		3948B	* 3450160	365.2 ✓
Filter	CQ736	10CMSB	4723B	3450196	367.6 ✓

Analysis results (mg)*

Sample type	Lab No.	Initial wt. (ambient)	Heat to 320°F, 3 hour cool, weigh	Heat to 450°F, 3 hour cool, weigh	Heat to 600°F, 3 hour cool, weigh	Heat to 320°F, 24 hour cool, weigh	Heat to 450°F, 24 hour cool, weigh	Heat to 600°F, 24 hour cool, weigh
Acetone blank	CQ769	9.3 ✓	5.1 ✓	0.9 ✓	-0.6 ✓			
Acetone blank (2)								
Acetone blank (3)								
Acetone rinse	CQ767	19.8 ✓				11.3 ✓	9.0 ✓	7.8 ✓
Filter blank	CQ738	0.6 ✓	0.4 ✓	0.2 ✓	0.4 ✓			
Filter	CQ736	28.9 ✓				27.1 ✓	25.1 ✓	23.8 ✓
Total particulate		48.7 ✓✓				38.4 ✓✓	34.1 ✓✓	31.6 ✓✓

Remarks
Data reviewed by Lauren Drees LAK

*These are net weights (gross wt. avg. minus tare wt.) without blank subtraction.

[redacted] THERMOGRAVIMETRIC PARTICULATE ANALYSIS [redacted]

PN _____

Plant U.S. EPA-EMB-Phillips Petroleum Run No. 10DMSB

Sample location _____ Analyst C. Jones

Relative humidity _____ Density of acetone (ρa) .7908 (g/ml)

Sample type	Lab No.	Sample I.D.	Container No.	Initial Vol. (ml)	Tare Wt. (mg)
Acetone blank	CQ769		4024A	412 ml's ✓	107964.5 ✓
Acetone blank (2)					
Acetone blank (3)					
Acetone rinse	CQ768	10DMSB	4726A	340 ml's ✓	104351.6 ✓
Filter blank	CQ738		3948B	#3450160	365.2 ✓
Filter	CQ737	10DMSB	4726B	3450184	369.2 ✓

Analysis results (mg)*

Sample type	Lab No.	Initial wt. (ambient)	Heat to 320°F, 3 hour cool, weigh	Heat to 450°F, 3 hour cool, weigh	Heat to 600°F, 3 hour cool, weigh	Heat to 320°F, 24 hour cool, weigh	Heat to 450°F, 24 hour cool, weigh	Heat to 600°F, 24 hour cool, weigh
Acetone blank	CQ769	9.3 ✓	5.1 ✓	0.9 ✓	-0.6 ✓			
Acetone blank (2)								
Acetone blank (3)								
Acetone rinse	CQ768	48.8 ✓	25.2 ✓	20.2 ✓	16.2 ✓			
Filter blank	CQ738	0.6 ✓	0.4 ✓	0.2 ✓	0.4 ✓			
Filter	CQ737	29.6 ✓	27.4 ✓	26.0 ✓	24.6 ✓			
Total particulate		78.4 ✓✓	52.6 ✓✓	46.2 ✓✓	40.8 ✓✓			

Remarks _____

Data reviewed by Lauren Drees AK

*These are net weights (gross wt. avg. minus tare wt.) without blank subtraction.

U.S. ENVIRONMENTAL PROTECTION AGENCY

PHILLIPS PETROLEUM
PN 3530-14

Summary SO_2 Analysis

Sample ID	PEDCo No.	SO_2, total mg
1AM5	CQ779	4130
1BM5	CQ780	3900
1CM5W	CQ781	4560
1DM5W	CQ782	4730
2AM5450	CQ783	4000
2BM5450	CQ784	3860
2CM5B	CQ785	4740
2DM5B	CQ786	4750
3AM5W	CQ787	4060
3BM5W	CQ788	4210
3CM5	CQ789	4670
3DM5	CQ790	4660
4AM5450	CQ791	3910
4BM5450	CQ792	4080
4CM5B	CQ793	4560
4DM5B	CQ794	4580
5AM5	CQ795	2840
5BM5	CQ796	3080
5CM5W	CQ797	3390
5DM5W	CQ798	3350
6AM5450	CQ799	4030
6BM5450	CQ800	4140
6CM5B	CQ801	4680
6DM5B	CQ802	4630
7AM5B	CQ803	3120
7BM5B	CQ804	3180
7CM5W	CQ805	2650
7DM5W	CQ806	3590
8AM5450	CQ807	3980
8BM5450	CQ808	4050
8CM5W	CQ809	3730
8DM5W	CQ810	4650
9AM5	CQ811	4480
9BM5	CQ812	4400
9CM5B	CQ813	4790
9DM5B	CQ814	4920
10AM5450	CQ815	3530
10BM5450	CQ816	3560
10CM5B	CQ817	4110
10DM5B	CQ818	4020
Blank-H_2O_2	CQ819	<0.2

SUMMARY H_2SO_4 ANALYSIS

Sample ID	PEDCo No.	H_2SO_4, total mg
1AM5	CQ820	28.9
1BM5	CQ821	16.3
1CM5W	CQ822	23.3
1DM5W	CQ823	68.3
2AM5450	CQ824	69.2
2BM5450	CQ825	102
2CM5B	CQ826	40.7
2DM5B	CQ827	78.7
3AM5W	CQ828	42.1
3BM5W	CQ829	79.5
3CM5	CQ830	21.9
3DM5	CQ831	32.9
4AM5450	CQ832	207
4BM5450	CQ833	201
4CM5B	CQ834	193
4DM5B	CQ835	278
5AM5	CQ836	40.0
5BM5	CQ837	71.3
5CM5W	CQ838	54.3
5DM5W	CQ839	86.2
6AM5450	CQ840	189
6BM5450	CQ841	252
6CM5B	CQ842	226
6DM5B	CQ843	182
7AM5B	CQ844	135
7BM5B	CQ845	148
7CM5W	CQ846	109
7DM5W	CQ847	154
8AM5450	CQ848	158
8BM5450	CQ849	102
8CM5W	CQ850	620
8DM5W	CQ851	93.6
9AM5	CQ852	59.1
9BM5	CQ853	53.3
9CM5B	CQ854	360
9DM5B	CQ855	304
10AM5450	CQ856	243
10BM5450	CQ857	218
10CM5B	CQ858	277
10DM5B	CQ859	273
Blank-IPA	CQ860	<0.1

LABORATORY REPORT

U.S. EPA PN: 3530-14 1-28-83

Phillips Petroleum
Nonwater Soluble Sulfate Particulate Analysis

Run No.	Lab No.	Net Weight, mg	C_{SO4}, mg/l	Volume Evaporated* ml	NWSSP, mg
1CM5W-F	CQ861	99.8	177.0	235	42.6
1CM5W-PR	CQ872	155.3	286.8	365	11.3
1DM5W-F	CQ862	56.7	42.54	235	42.9
1DM5W-PR	CQ873	91.7	173.4	343	9.9
3AM5W-F	CQ863	99.3	156.6	235	48.7
3AM5W-PR	CQ874	120.7	326.0	229	18.0
3BM5W-F	CQ864	72.7	91.36	235	43.2
3BM5W-PR	CQ875	97.9	182.0	314	19.3
5CM5W-F	CQ865	Not Analyzed			
5CM5W-PR	CQ876	Not Analyzed			
5DM5W-F	CQ866	89.6	184.6	235	29.9
5DM5W-PR	CQ877	104.9	199.7	439	(-15.7)
7CM5W-F	CQ867	81.1	176.2	235	24.1
7CM5W-PR	CQ878	164.1	383.8	309	1.0
7DM5W-F	CQ868	49.7	74.06	235	25.8
7DM5W-PR	CQ879	159.0	277.2	344	27.8
8CM5W-F	CQ869	61.9	54.06	235	44.4
8CM5W-PR	CQ880	43.7	65.74	349	12.1
8DM5W-F	CQ870	65.6	65.56	235	44.4
8DM5W-PR	CQ881	94.5	154.4	372	15.5
Blank-F	CQ871	(-10.8)	3.79	235	(-12.0)
Blank-PR	CQ882	1.2	0.30	370	1.0
Blank-F	CR295	5.4	10.6	235	2.0
Blank-F	CR296	(-9.0)	4.05	235	(-10.3)
Blank-F	CR297	(-11.2)	3.25	235	(-12.3)
Blank-F	CR298	1.9	5.35	235	0.2

*15 ml were removed for ion chromatography analysis.

Reviewed by: Thomas J. Wagner 2-2-83

LABORATORY REPORT
U.S. EPA; PN 3530-14
MARCH 8, 1983

PHILLIPS SAMPLES

Run No.	Lab No.	C_{SO_4}, ml/liter	Volume, ml	SO_4, mg
1AM5-PR	CQ739	25.12	250	6.3
1AM5-F	CQ708	78.04	250	19.5
1BM5-PR	CQ740	28.40	250	7.1
1BM5-F	CQ709	82.71	250	20.7
2AM5-450-PR	CQ741	3.68	250	0.9
2AM5-450-F	CQ710	12.12	250	3.0
2BM5-450-PR	CQ742	3.97	250	1.0
2BM5-450-F	CQ711	12.66	250	3.2
2CM5B-PR	CQ743	9.53	250	2.4
2CM5B-F	CQ712	13.92	250	3.5
2DM5B-PR	CQ744	9.60	250	2.4
2DM5B-F	CQ713	19.36	250	4.8
3CM5-PR	CQ745	40.42	250	10.1
3CM5-F	CQ714	113.9	250	28.5
3DM5-PR	CQ746	50.41	250	12.6
3DM5-F	CQ715	115.6	250	28.9
4AM5-450-PR	CQ747	15.83	250	4.0
4AM5-450-F	CQ716	12.83	250	3.2
4BM5-450-PR	CQ748	5.80	250	1.4
4BM5-450-F	CQ717	15.34	250	3.8
4CM5B-PR	CQ749	10.71	250	2.7
4CM5B-F	CQ718	16.44	250	4.1
4DM5B-PR	CQ750	15.99	250	4.0
4DM5B-F	CQ719	16.40	250	4.1
5AM5-PR	CQ751	18.49	250	4.6
5AM5-F	CQ720	51.44	250	12.9

(continued)

PHILLIPS SAMPLES (continued)

Run No.	Lab No.	C_{SO_4}, ml/liter	Volume, ml	SO_4, mg
5BM5-PR	CQ752	7.76	250	1.9
5BM5-F	CQ721	28.29	250	7.1
6AM5-450-PR	CQ753	3.36	250	0.8
6AMB-450-F	CQ722	12.10	250	3.0
6BM5-450-PR	CQ754	14.19	250	3.5
6BM5-450-F	CQ723	14.07	250	3.5
6CM5B-PR	CQ755	16.48	250	4.1
6CM5B-F	CQ724	18.35	250	4.6
6DM5B-PR	CQ756	6.79	250	1.7
6DM5B-F	CQ725	13.32	250	3.3
7AM5B-PR	CQ757	5.46	250	1.4
7AM5B-F	CQ726	12.47	250	3.1
7BM5B-PR	CQ758	14.14	250	3.5
7BM5B-F	CQ727	12.26	250	3.1
8AM5-450-PR	CQ759	11.54	250	2.9
8AM5-450-F	CQ728	15.08	250	3.8
8BM5-450-PR	CQ760	5.69	250	1.4
8BM5-450-F	CQ729	18.18	250	4.5
9AM5-PR	CQ761	41.68	250	10.4
9AM5-F	CQ730	64.50	250	16.1
9BM5-PR	CQ762	29.51	250	7.4
9BM5-F	CQ731	52.37	250	13.1
9CM5B-PR	CQ763	8.77	250	2.2
9CM5B-F	CQ732	13.65	250	3.4
9DM5B-PR	CQ764	5.56	250	1.4
9DM5B-F	CQ733	15.90	250	4.0
10AM5-450-PR	CQ765	3.42	250	0.8
10AM5-450-F	CQ734	11.09	250	2.8
10BM5-450-PR	CQ766	4.97	250	1.2
10BM5-450-F	CQ735	10.58	250	2.6

(continued)

PHILLIPS SAMPLES (continued)

Run No.	Lab No.	C_{SO_4}, ml/liter	Volume, ml	SO_4, mg
10CM5B-PR	CQ767	6.20	250	1.6
10CM5B-F	CQ736	16.22	250	4.1
10DM5B-PR	CQ768	17.78	250	4.4
10DM5B-F	CQ737	16.58	250	4.1
Blank-PR	CQ769	<1.00	250	<0.2
Blank-F	CQ738	4.39	250	1.1
Blank-F	CR292	1.29	250	0.3
Blank-F	CR293	1.26	250	0.3
Blank-F	CR294	1.30	250	0.3

Reviewed by Thomas J. Hagen 3/9/83

LABORATORY REPORT
U.S. EPA; PN 3530-14
MARCH 7, 1983

PHILLIPS SAMPLES

Run No.	Lab No.	Net weight, mg Ambient	Net weight, mg M5W	C_{SO_4}, mg/liter	V_{evap}, ml	NWSSP, mg
5CM5W-PR	CQ876	90.6	77.9	166.6	200	32.1
5CM5W-F	CQ865	-	129.2	317.8	250	19.9

Reviewed by Thomas J. Wagner 3/9/83

Cation Data

CORPORATION

PAGE 1 Analytical Serv REPORT LAB # 83-06-016

RECEIVED: 06/02/83 06/20/83 09:25:20

REPORT TO: Pedco Environmental
11499 Chester Road
Cincinnati, Ohio 45246

ATTEN: Mr. Tom Wagner

CLIENT: PED CO SAMPLES: 9
COMPANY: Pedco Environmental
FACILITY:

PREPARED BY: Radian Analytical Services
8501 MoPac Blvd.
P.O. Box 9948
Austin, Texas 78766

ATTEN:
PHONE: (512) 454-4797

CERTIFIED BY

CONTACT: HEINRICH

RECEIVED
JUN 23 1983
PEDCO ENVIRONMENTAL
By

WORK ID: ICP Analysis-water extracts
TAKEN:
TRANS: UPS
TYPE: waters
P.O. #: PEI-83-7139L-3530-14
INVOICE: under separate cover

SAMPLE IDENTIFICATION

01	CQ 861	IC	1CMSW F ✓ (Phillips)
02	CQ 862	IC	1DMSW F ✓
03	CQ 867	IC	2CMSW F ✓
04	CQ 868	IC	2DMSW F ✓
05	CQ 871	IC	F Filter Blank ✓
06	CQ 872	IC	1CMSW PR ✓
07	CQ 873	IC	1DMSW PR ✓
08	CQ 878	IC	2CMSW PR ✓
09	CQ 879	IC	2DMSW PR ✓

Analytical Serv TEST CODES and NAMES used on this report

ICP 40 Complete ICPES Analysis

RADIAN CORPORATION

 Analytical Serv REPORT LAB # 83-06-016

RECEIVED: 06/02/83 Results by Sample

SAMPLE ID CQ 861 IC FRACTION 01A TEST CODE ICP 40 NAME Complete ICPES Analysis

Date & Time Collected not specified Category

VERIFIED BY DLH

DATE ANALYZED 06/06/83

CODE	METAL	RESULT	CODE	METAL	RESULT	CODE	METAL	RESULT
AG	Silver	<.002	HG	Mercury	<.03	SE	Selenium	<.08
AL	Aluminum	14	IN	Indium	<.05	SI	Silicon	2.2
AS	Arsenic	<.06	K	Potassium	2.0	SN	Tin	<.12
AU	Gold	<.03	LI	Lithium	<.001	SR	Strontium	0.020
B	Boron	0.61	MG	Magnesium	0.042	TE	Tellurium	<.10
BA	Barium	<.001	MN	Manganese	<.001	TI	Titanium	<.005
BE	Beryllium	<.0005	MO	Molybdenum	<.002	TL	Thallium	<.09
BI	Bismuth	<.05	NA	Sodium	5.8	U	Uranium	<.06
CA	Calcium	2.0	NI	Nickel	0.25	V	Vanadium	0.38
CD	Cadmium	<.002	P	Phosphorous	1.5	W	Tungsten	<.03
CO	Cobalt	<.006	PB	Lead	<.08	Y	Yttrium	<.002
CR	Chromium	<.001	PT	Platinum	<.03	ZN	Zinc	0.16
CU	Copper	<.001	S	Sulfur	5.5			NA
FE	Iron	0.98	SB	Antimony	<.03			NA

NOTES AND DEFINITIONS FOR THIS REPORT.

All results reported in ug/ml unless otherwise specified.
NA = not analyzed
* = less than 5 times the detection limit.

KAUFFMAN CORPORATION

PAGE 3 Analytical Serv REPORT LAB # 83-06-016

RECEIVED: 06/02/83 Results by Sample

SAMPLE ID CQ 862 IC FRACTION 02A TEST CODE ICP 40 NAME Complete ICPES Analysis

Date & Time Collected not specified Category

VERIFIED BY DLH

DATE ANALYZED 06/06/83

CODE	METAL	RESULT	CODE	METAL	RESULT	CODE	METAL	RESULT
AG	Silver	<.002	HG	Mercury	<.03	SE	Selenium	<.08
AL	Aluminum	2.7	IN	Indium	<.05	~~SI~~	Silicon	2.4
AS	Arsenic	<.06	K	Potassium	1.0	SN	Tin	<.12
AU	Gold	<.03	LI	Lithium	0.031	SR	Strontium	0.016
~~B~~	Boron	0.85	MG	Magnesium	0.13	TE	Tellurium	<.10
BA	Barium	<.001	MN	Manganese	0.002	TI	Titanium	0.041
BE	Beryllium	<.0005	MO	Molybdenum	0.024	TL	Thallium	<.09
BI	Bismuth	<.05	NA	Sodium	3.1	U	Uranium	<.06
CA	Calcium	1.4	NI	Nickel	0.045	V	Vanadium	0.
CD	Cadmium	<.002	~~P~~	Phosphorous	0.55	W	Tungsten	<.03
CO	Cobalt	<.006	PB	Lead	<.08	Y	Yttrium	<.002
CR	Chromium	0.008	PT	Platinum	<.03	ZN	Zinc	0.032
CU	Copper	<.001	~~S~~	Sulfur	14			NA
FE	Iron	0.37	SB	Antimony	<.03			NA

NOTES AND DEFINITIONS FOR THIS REPORT.

All results reported in ug/ml unless otherwise specified.
NA = not analyzed
* = less than 5 times the detection limit.

CORPORATION

Analytical Serv REPORT

LAB # 83-06-016

RECEIVED: 06/02/83

Results by Sample

SAMPLE ID CG 867 IC

FRACTION 03A TEST CODE ICP 40 NAME Complete ICPES Analysis

Date & Time Collected not specified Category

VERIFIED BY DLH

DATE ANALYZED 06/06/83

CODE	METAL	RESULT	CODE	METAL	RESULT	CODE	METAL	RESULT
AG	Silver	<.002	HG	Mercury	<.03	SE	Selenium	<.08
AL	Aluminum	10	IN	Indium	<.05	SI	Silicon	4.8
AS	Arsenic	<.06	K	Potassium	1.7	SN	Tin	<.12
AU	Gold	<.03	LI	Lithium	0.002	SR	Strontium	0.019
B	Boron	0.57	MG	Magnesium	0.16	TE	Tellurium	<.10
BA	Barium	<.001	MN	Manganese	<.001	TI	Titanium	<.005
BE	Beryllium	<.0005	MO	Molybdenum	<.002	TL	Thallium	<.09
BI	Bismuth	<.05	NA	Sodium	2.8	U	Uranium	<.06
CA	Calcium	2.0	NI	Nickel	0.15	V	Vanadium	0.24
CD	Cadmium	<.002	P	Phosphorous	1.1	W	Tungsten	<.03
CO	Cobalt	<.006	PB	Lead	<.08	Y	Yttrium	<.002
CR	Chromium	<.001	PT	Platinum	<.03	ZN	Zinc	0.077
CU	Copper	<.001	S	Sulfur	48			NA
FE	Iron	0.77	SB	Antimony	<.03			NA

NOTES AND DEFINITIONS FOR THIS REPORT.

All results reported in ug/ml unless otherwise specified.
NA = not analyzed
* = less than 5 times the detection limit.

RADIAN CORPORATION

RECEIVED: 06/02/83

Analytical Serv REPORT LAB # 83-06-016

Results by Sample

SAMPLE ID CQ 868 IC

FRACTION 04A TEST CODE ICP 40 NAME Complete ICPES Analysis

Date & Time Collected not specified Category

VERIFIED BY DLH

DATE ANALYZED 06/06/83

CODE	METAL	RESULT	CODE	METAL	RESULT	CODE	METAL	RESULT
AG	Silver	<.002	HG	Mercury	<.03	SE	Selenium	<.08
AL	Aluminum	5.7	IN	Indium	<.05	SI	Silicon	1.4
AS	Arsenic	<.06	K	Potassium	1.2	SN	Tin	<.12
AU	Gold	<.03	LI	Lithium	0.035	SR	Strontium	0.019
B	Boron	0.82	MG	Magnesium	0.18	TE	Tellurium	<.10
BA	Barium	<.001	MN	Manganese	0.002	TI	Titanium	0.058
BE	Beryllium	0.001	MO	Molybdenum	0.027	TL	Thallium	<.09
BI	Bismuth	<.05	NA	Sodium	2.9	U	Uranium	<.06
CA	Calcium	1.4	NI	Nickel	0.13	V	Vanadium	0.25
CD	Cadmium	<.002	P	Phosphorous	0.44	W	Tungsten	<.03
CO	Cobalt	<.006	PB	Lead	<.08	Y	Yttrium	<.002
CR	Chromium	0.025	PT	Platinum	<.03	ZN	Zinc	0.028
CU	Copper	<.001	S	Sulfur	23			NA
FE	Iron	0.45	SB	Antimony	<.03			NA

NOTES AND DEFINITIONS FOR THIS REPORT.

All results reported in ug/ml unless otherwise specified.
NA = not analyzed
* = less than 5 times the detection limit.

[redacted] CORPORATION [redacted] Analytical Serv REPORT LAB # 83-06-016

RECEIVED: 06/02/83

Results by Sample

SAMPLE ID CQ 871 IC FRACTION 05A TEST CODE ICP 40 NAME Complete ICPES Analysis

Date & Time Collected not specified Category

VERIFIED BY DLH

DATE ANALYZED 06/06/83

CODE	METAL	RESULT	CODE	METAL	RESULT	CODE	METAL	RESULT
AG	Silver	<.002	HG	Mercury	<.03	SE	Selenium	<.08
AL	Aluminum	<.05	IN	Indium	<.05	SI	Silicon	6.9
AS	Arsenic	<.06	K	Potassium	0.82	SN	Tin	<.12
AU	Gold	<.03	LI	Lithium	0.019	SR	Strontium	0.008
B	Boron	0.68	MG	Magnesium	0.16	TE	Tellurium	<.10
BA	Barium	<.001	MN	Manganese	<.001	TI	Titanium	0.025
BE	Beryllium	<.0005	MO	Molybdenum	0.023	TL	Thallium	<.09
BI	Bismuth	<.05	NA	Sodium	1.4	U	Uranium	<.06
CA	Calcium	1.1	NI	Nickel	<.003	V	Vanadium	0.013
CD	Cadmium	<.002	P	Phosphorous	<.18	W	Tungsten	<.03
CO	Cobalt	<.006	PB	Lead	<.08	Y	Yttrium	<.002
CR	Chromium	0.003	PT	Platinum	<.03	ZN	Zinc	<.003
CU	Copper	<.001	S	Sulfur	1.5			NA
FE	Iron	0.015	SB	Antimony	<.03			NA

NOTES AND DEFINITIONS FOR THIS REPORT.

All results reported in ug/ml unless otherwise specified.
NA = not analyzed
* = less than 5 times the detection limit.

RADIAN CORPORATION

RECEIVED: 06/02/83

Analytical Serv REPORT LAB # 83-06-016

Results by Sample

SAMPLE ID CQ 872 IC

FRACTION 06A TEST CODE ICP 40 NAME Complete ICPES Analysis

Date & Time Collected not specified Category

VERIFIED BY DLH

DATE ANALYZED 06/06/83

CODE	METAL	RESULT	CODE	METAL	RESULT	CODE	METAL	RESULT
AG	Silver	<.002	HG	Mercury	<.03	SE	Selenium	<.08
AL	Aluminum	3.3	IN	Indium	<.05	SI	Silicon	1.0
AS	Arsenic	<.06	K	Potassium	0.75	SN	Tin	<.12
AU	Gold	<.03	LI	Lithium	<.0005	SR	Strontium	0.010
B	Boron	0.33	MG	Magnesium	0.10	TE	Tellurium	<.10
BA	Barium	<.001	MN	Manganese	0.024	TI	Titanium	<.005
BE	Beryllium	<.0005	MO	Molybdenum	0.021	TL	Thallium	<.09
BI	Bismuth	<.05	NA	Sodium	3.6	U	Uranium	<.06
CA	Calcium	0.64	NI	Nickel	0.13	V	Vanadium	0.081
CD	Cadmium	<.002	P	Phosphorous	2.9	W	Tungsten	<.03
CO	Cobalt	<.006	PB	Lead	<.08	Y	Yttrium	<.002
CR	Chromium	0.040	PT	Platinum	<.03	ZN	Zinc	1.9
CU	Copper	<.001	S	Sulfur	93			NA
FE	Iron	0.70	SB	Antimony	<.03			NA

NOTES AND DEFINITIONS FOR THIS REPORT.

All results reported in ug/ml unless otherwise specified.
NA = not analyzed
* = less than 5 times the detection limit.

Analytical Serv REPORT LAB # 83-06-016

RECEIVED: 06/02/83

Results by Sample

SAMPLE ID CQ 873 IC

FRACTION 07A TEST CODE ICP 40 NAME Complete ICPES Analysis

Date & Time Collected not specified Category

VERIFIED BY DLH

DATE ANALYZED 06/06/83

CODE	METAL	RESULT	CODE	METAL	RESULT	CODE	METAL	RESULT
AG	Silver	<.002	HG	Mercury	<.03	SE	Selenium	<.08
AL	Aluminum	2.4	IN	Indium	<.05	SI	Silicon	0.86
AS	Arsenic	<.06	K	Potassium	<.04	SN	Tin	<.12
AU	Gold	<.03	LI	Lithium	<.0005	SR	Strontium	0.008
B	Boron	0.17	MG	Magnesium	<.03	TE	Tellurium	<.10
BA	Barium	<.001	MN	Manganese	0.003	TI	Titanium	<.005
BE	Beryllium	<.0005	MO	Molybdenum	<.002	TL	Thallium	<.09
BI	Bismuth	<.05	NA	Sodium	2.0	U	Uranium	<.06
CA	Calcium	0.32	NI	Nickel	0.022	V	Vanadium	0.006
CD	Cadmium	<.002	P	Phosphorous	2.9	W	Tungsten	<.03
CO	Cobalt	<.006	PB	Lead	<.08	Y	Yttrium	<.002
CR	Chromium	<.001	PT	Platinum	<.03	ZN	Zinc	1.5
CU	Copper	0.019	S	Sulfur	49			NA
FE	Iron	0.49	SB	Antimony	<.03			NA

NOTES AND DEFINITIONS FOR THIS REPORT.

All results reported in ug/ml unless otherwise specified.
NA = not analyzed
* = less than 5 times the detection limit.

RECEIVED: 06/02/83

Analytical Serv REPORT LAB # 83-06-016

Results by Sample

SAMPLE ID CQ 878 IC

FRACTION 08A TEST CODE ICP 40 NAME Complete ICPES Analysis

Date & Time Collected not specified Category

VERIFIED BY DLH

DATE ANALYZED 06/06/83

CODE	METAL	RESULT	CODE	METAL	RESULT	CODE	METAL	RESULT
AG	Silver	<.002	HG	Mercury	<.03	SE	Selenium	<.08
AL	Aluminum	2.4	IN	Indium	<.05	SI	Silicon	1.4
AS	Arsenic	<.06	K	Potassium	<.04	SN	Tin	<.12
AU	Gold	<.03	LI	Lithium	<.001	SR	Strontium	0.008
B	Boron	0.054	MG	Magnesium	<.03	TE	Tellurium	<.10
BA	Barium	<.001	MN	Manganese	0.046	TI	Titanium	<.005
BE	Beryllium	<.0005	MO	Molybdenum	<.002	TL	Thallium	<.09
BI	Bismuth	<.05	NA	Sodium	0.75	U	Uranium	<.06
CA	Calcium	0.35	NI	Nickel	0.19	V	Vanadium	<.003
CD	Cadmium	<.002	P	Phosphorous	3.1	W	Tungsten	<.03
CO	Cobalt	<.006	PB	Lead	<.08	Y	Yttrium	<.002
CR	Chromium	0.015	PT	Platinum	<.03	ZN	Zinc	3.0
CU	Copper	0.019	S	Sulfur	100			NA
FE	Iron	0.59	SB	Antimony	<.03			NA

NOTES AND DEFINITIONS FOR THIS REPORT.

All results reported in ug/ml unless otherwise specified.
NA = not analyzed
* = less than 5 times the detection limit.

C-48

RADIAN CORPORATION

 Analytical Serv REPORT LAB # 83-06-016

RECEIVED: 06/02/83 Results by Sample

SAMPLE ID CQ 879 IC FRACTION 09A TEST CODE ICP 40 NAME Complete ICPES Analysis

Date & Time Collected not specified Category

VERIFIED BY DLH

DATE ANALYZED 06/06/83

CODE	METAL	RESULT	CODE	METAL	RESULT	CODE	METAL	RESULT
AG	Silver	<.002	HG	Mercury	<.03	SE	Selenium	<.08
AL	Aluminum	1.9	IN	Indium	<.05	SI	Silicon	0.66
AS	Arsenic	<.06	K	Potassium	0.86	SN	Tin	<.12
AU	Gold	<.03	LI	Lithium	0.019	SR	Strontium	0.009
B	Boron	0.38	MG	Magnesium	0.22	TE	Tellurium	<.10
BA	Barium	<.001	MN	Manganese	0.002	TI	Titanium	0.053
BE	Beryllium	<.0005	MO	Molybdenum	0.023	TL	Thallium	<.09
BI	Bismuth	<.05	NA	Sodium	1.1	U	Uranium	<.06
CA	Calcium	0.23	NI	Nickel	0.012	V	Vanadium	0.084
CD	Cadmium	<.002	P	Phosphorous	3.0	W	Tungsten	<.03
CO	Cobalt	<.006	PB	Lead	<.08	Y	Yttrium	<.002
CR	Chromium	0.015	PT	Platinum	<.03	ZN	Zinc	2.0
CU	Copper	<.001	S	Sulfur	78			NA
FE	Iron	0.45	SB	Antimony	<.03			NA

NOTES AND DEFINITIONS FOR THIS REPORT.

All results reported in ug/ml unless otherwise specified.
NA = not analyzed
* = less than 5 times the detection limit.

APPENDIX D

SAMPLING AND ANALYTICAL PROCEDURES

DETERMINATION OF PARTICULATE, SULFUR DIOXIDE, AND SULFATE EMISSIONS

All samples were collected using an EPA Method 5* sampling train with a Method 8* back half. Method 5 sampling procedures were utilized for all tests, except as noted.

SAMPLING APPARATUS

Each sampling train was set up as shown in Figure D-1. Each train consisted of:

Nozzle - Stainless steel (316) with sharp, tapered leading edge and accurately measured round opening.

Probe - Borosilicate glass with a heating system capable of maintaining the desired gas temperature at the exit end during sampling.

Pitot Tube - Type S pitot tube that met all geometry standards was attached to the probe to monitor stack gas velocity.

Filter Holder - Pyrex glass with heating system capable of maintaining a filter temperature at desired levels.

Draft Gauge - An inclined manometer made by Dwyer with a readability of 0.01 inch H_2O in the 0 to 10 inch range was used.

Impingers - Four impingers connected in series with glass ball joints. The first, third, and fourth impingers were of the Greenburg-Smith design, modified by replacing the tip with a 1/2 inch I.D. glass tube extending to 1/2 inch from the bottom of the flask.

---

*40 CFR 60, Appendix A, Reference Methods 5 and 8, July 1982.

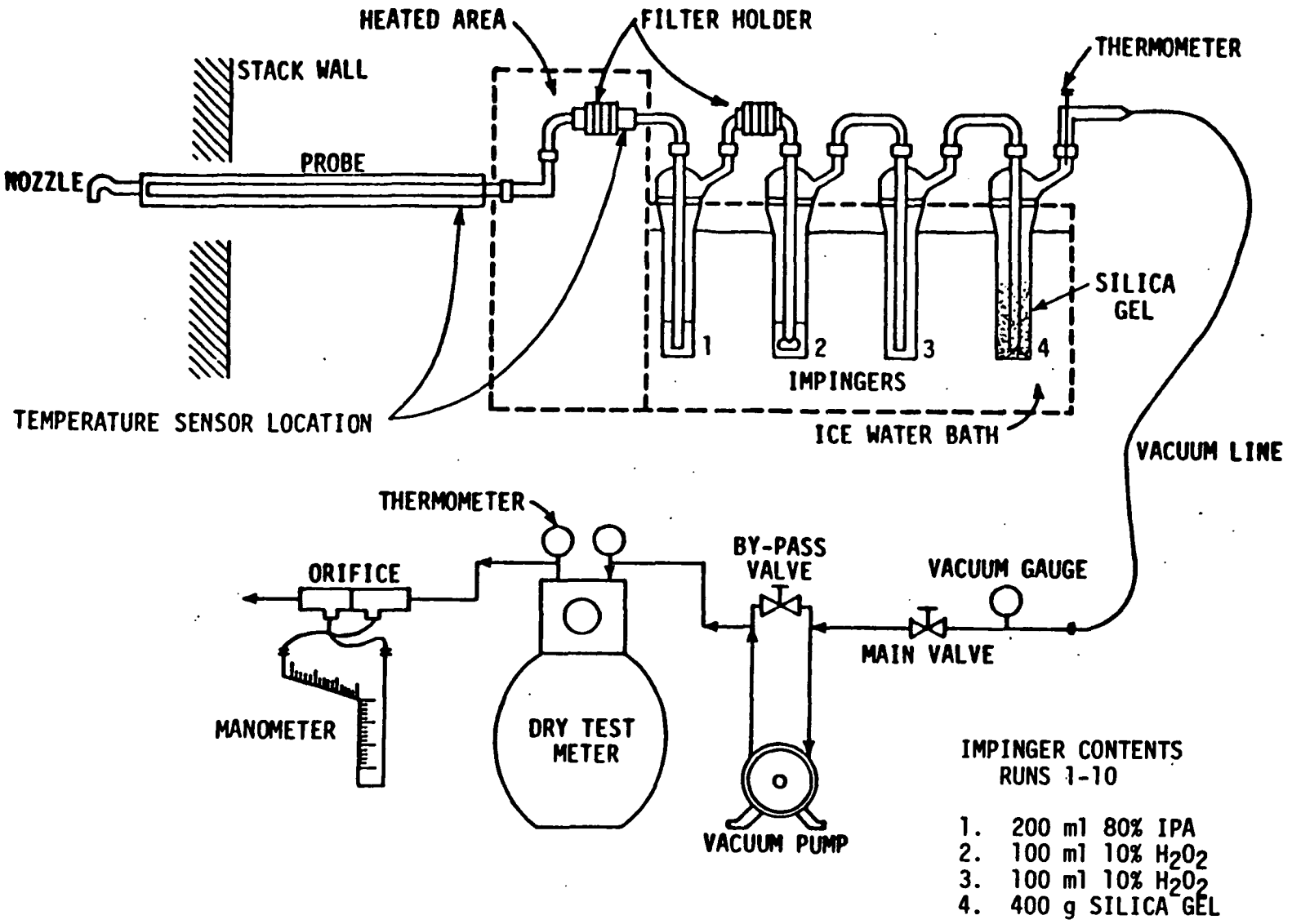

Figure D-1. Method 5 sampling train.

Metering System - Vacuum guage, leak-free pump, thermometers capable of measuring temperature to within 5°F, calibrated dry gas meter, related equipment to maintain an isokinetic sampling rate, and to determine sample volume. The dry gas meter was made by Rockwell and the fiber vane pump was made by Gast.

The back half of each sample train was a Method 8 with four impingers. An unheated Method 5 filter assembly was inserted between the first and second impingers to preclude any sulfuric acid mist carryover. The contents of each impinger were as follows:

Impinger	Contents - All Runs
1	200-ml 80% IPA
2	100-ml 10% H_2O_2
3	100-ml 10% H_2O_2
4	400-grams silica gel

All filters were Whatman Reeve Angel 934AH and the filters used in the Method 5 position were heated to 300°C prior to identification and tare weighing.

The particular conditions for each train are described briefly below:

- Method 5 - Designation M5

  Filterable particulate was collected using a probe and filter assembly heated to 121°C (250°F). Acetone was used to rinse all sample train components prior to the filter.

- Method 5B - Designation M5B

  Filterable particulate was collected using a probe and filter assembly heated to 160°C (320°F). Acetone was used to rinse all sample train components prior to the filter.

- Method 5-450 - Designation M5-450

  Filterable particulate was collected using a probe and filter assembly heated to 232°C (450°F). Acetone was used to rinse all sample train components prior to the filter.

- Method 5W - Designation M5W

  Filterable particulate was collected using a probe and filter assembly heated to 121°C (250°F). Deionized, distilled water was used to rinse all sample train components prior to the filter.

For each train, the probe and filter temperatures were set at the predetermined temperature and monitored using multi-terminal digital indicators with thermocouple leads located in each probe and immediately behind the Method 5 filter frits.

Each individual sample train was leak checked at the sample site prior to testing by plugging the sample nozzle and pulling a 15 in.Hg vacuum and at the end of each test by pulling a vacuum equal to the highest vacuum recorded during the test.

The pitot tube and lines were leak checked at the test site prior to each test run and at the conclusion of each test run. The check was made by blowing into the impact opening of the pilot tube until 3 or more inches of water was recorded on the manometer and then capping the impact opening and holding it for 15 seconds to assure it was leak free. The static pressure side of the pitot tube was leak checked using the same procedure, except suction was used to obtain the 3 in. H_2O manometer reading. Crushed ice was placed around the impingers in an attempt to keep the temperature of the gas leaving the last impinger at 68°F or less.

Flue gas moisture content was determined gravimetrically by weighing each impinger before and after each test. Additionally, a flue gas grab sample collected during each test was analyzed for O_2, CO_2, and CO using an Orsat analyzer to facilitate calculation of the stack gas molecular weight.

SAMPLE LABELING

The sample label identifies the test run number, sample train, and each component of the individual train. The run number are consecutive from 1 to 10. Since each run consists of four single trains, each train was identified by a letter A, B, C, or D.

The last item of the label identifies the sample method and the component of the recovered sample. For example, identification No. 1A M5-IPA indicates Test Run 1, Sample Train A, Method 5 sample method at 121°C (250°F) and the IPA impinger contents and rinse. Another example is 9C M5B-Probe indicating Test Run 9, Sample Train C, Method 5B sample method at 160°C (320°F) and the probe rinse fraction.

SAMPLE RECOVERY

The components of each individual train were labeled and disassembled at the stack for transport to the sample clean-up/setup area. The filter and probe assemblies were recovered as follows:

- All filters were carefully removed from the filter holder and placed in a petri dish. These filters were carefully sealed and labeled.

- For Methods 5, 5B, and M5-450 loose particulate from all sample exposed surfaces prior to the filter and acetone washings was placed in a polyethylene container, sealed, and labeled. For Method 5W, deionized, distilled water was used for the probe rinse. Particulate was removed from the nozzle and probe with nylon brush. The liquid level was marked after each container was sealed.

The impinger section of each individual sample train (Method 8) was purged with ambient air at the recovery site for 15 minutes before recovering the contents. The impingers were removed from the ice bath prior to purging.

The contents were recovered as follows:

- After gravimetric weighing, the contents (80 percent IPA) of the first impinger were placed in a polyethylene container. The impinger and connecting glassware prior to the backhalf filter were rinsed with 80 percent IPA and the rinse was added to the container along with the backhalf filter. The container was then sealed, labeled, and the liquid level marked.

- After gravimetric weighing, the contents of the second and third impingers were placed in a polyethylene container. The impingers and connecting glassware were rinsed with deionized, distilled water and the rinse was added to the container. The container was then sealed, labeled, and the liquid level marked.

- The color of the silica gel was noted on the sample recovery sheet and the net weight gain determined gravimetrically.

Blank samples were taken each day of sampling for the following: acetone; deionized, distilled water; 80 percent IPA; 10 percent H_2O_2; and a filter. In addition, each probe was rinsed prior to initial use with either acetone or water (depending on method type) and these rinses were retained for probe rinse blank analysis.

SAMPLE RECEIPT AND CHAIN OF CUSTODY

Every sample entering the lab for analysis was assigned a unique alphanumeric identity on a Sample Receipt and Record Sheet (log). In the sample log-in book, this number was correlated with sample identification label and with the number of the analysis requisition form.

The analysis requisition is a triplicate form that lists the client, project number, type and number of samples submitted, and analysis required. It also assigns analysts to specific tasks and shows the number of hours estimated for those tasks.

The top sheet of the requisition form was placed in the requisition binder; the middle sheet was placed with the samples and later with the raw data. The bottom sheet was given to the person requesting the analyses.

The samples remained in a locked sample storage room until removed for analysis. Transfer was documented on a Sample Control Record which is maintained by the sample custodian. The Sample Control Record documents all custody changes which occur in the laboratory and each procedure performed on the sample.

Release of sample requires notation of the Sample Control Record and verification of information and sample container condition. If the sample is to be transferred between two persons (i.e., two analysts), the transfer must take place through the sample custodian. In other words, the sample will be returned to the sample custodian and reissued.

SAMPLE ANALYSIS

Particulate Analysis

Initially, the filter particulate catch was placed in a tared glass weighing dish, desiccated for 24 hours, and weighed to the nearest 0.1 mg until a constant weight was achieved.* The probe rinse fraction was transferred to a tared beaker and evaporated to dryness at ambient temperature and pressure, desiccated for 24 hours, and weighed to the nearest 0.1 mg until a constant weight was achieved.* After this initial analysis, probe rinse and filter fractions were heat conditioned in an oven for 6 hours (except where noted) following the specified treatment sequence. Each sample fraction was cooled and desiccated for 24 hours after removal from the oven and weighed to the nearest 0.1 mg until a constant weight** was achieved.

Water Soluble Sulfate Determination

Each sample fraction plus blanks were handled and analyzed as follows:

- Filter - The filter was cut into small pieces and placed in a 125-ml Erlenmeyer flask with a standard type joint equipped with an air condenser. The contents of the shipping container were rinsed into the flask. About 50 ml of distilled water was added and the contents gently refluxed for 6 to 8 hours. The solution was then cooled and diluted with water to exactly 250 ml in a volumetric flask. This solution was reserved for total soluble sulfate analysis, which is described below.

---

*Previous data have shown that samples collected at 120°C would not come to a constant weight. At least three separate weighings were obtained and the lowest weight achieved was reported as the ambient weight.

**40 CFR 60, Appendix A, Method 5, July 1982.

- Probe Rinse - The probe wash was poured into a 250 ml volumetric flask. The sample bottle was rinsed with distilled water and the rinsings were added to the flask. The solution was then diluted to the mark with distilled water (or, if greater than 250 ml, the volume was measured). This solution was reserved for total soluble sulfate analysis, which is described below.

Total Soluble Sulfate--

A 15-ml aliquot* was drawn from the settled samples (filter and rinse) into separate sample containers with a clean, dry pipet (only solution was transferred--no solid; if necessary, a portion of the sample was centrifuged). The sulfate ion ($SO_4^=$) concentration in each aliquot was determined by ion chromatography (IC). A syringe was used to inject 1 ml of the aliquot into the 100-μl sample loop of the IC. The conductivity response of the sample was compared with the calibration curve to obtain $SO_4^=$ concentration in ml/liter. Dilutions were prepared and reanalyzed if the initial response was out of the linear calibration range (i.e., greater than 15 mg/liter). Blank filter and water samples were prepared and analyzed in the same manner as the actual samples.

Mass Determination--

Filter and Rinse Solution Preparation - The remaining contents of each volumetric flask (235 ml) were poured into separate tared 250-ml beakers, and the flask was rinsed with distilled water to transfer all particulate matter. The filter solution was in Beaker A and the rinse solution was in Beaker B. These solutions were evaporated to approximately 100 ml at 105°C and allowed to cool before the next analysis was made.

---

*The pipet is not rinsed. This deviation from normal procedures is necessary because the volume removed from the volumetric flask is required in the calculations.

Filter and Rinse Solution Analysis - Five drops of phenolphthalein indicator were added to all the tared beakers. Concentrated NH_4OH was then added drop by drop until the solution turned pink. The samples were returned to the oven and evaporated to dryness at 105°C, then cooled in a desiccator and weighed to a constant weight. Results were reported to the nearest 0.1 mg. For this method, "constant weight" means a difference of no more than 0.5 mg or 1 percent of the total weight less beaker and/or filter tare, whichever is greater, between two consecutive weighings, with no less than 6 hours of desiccation time between weighings.

Calculations--

Nomenclature--

FP = weight of particulate* on the filter in Beaker A, mg

PRP = weight of probe rinse particulate* in Beaker B, mg

NWSSP = weight of nonwater-soluble sulfate particulate**, mg

AS_f = weight of ammonium sulfate in filter sample, mg

AS_{pr} = weight of AS in probe rinse sample, mg

V_{evap} = volume of solution evaporated in Beaker A (filter) or Beaker B (probe rinse), ml

C_{SO_4} = concentration of sulfate in filter or probe rinse solution aliquots, mg/liter

Equations--

FP(mg) = gross weight Beaker A - tare weight Beaker A - filter tare weight Eq. 1

PRP(mg) = gross weight Beaker B - tare weight Beaker B Eq. 2

$$AS(mg) = C_{SO_4}\ (mg/liter) \times V_{evap}\ (ml) \times \frac{liter}{1000\ ml} \times 1.376\ \left(\frac{mg\ AS}{mg\ SO_4}\right) \quad \text{Eq. 3}$$

---

*Particulate with H_2SO_4 converted to $(NH_4)_2SO_4$.

**Particulate exlcuding water-soluble sulfates.

Mass of Non-Water-Soluble Sulfate Particulate

The sum of the particulate* collected on the filter (FP) and the particulate* collected in the probe rinse (PRP) is equal to the sum of nonwater-soluble sulfate particulate (NWSSP) and ammonium sulfate (AS) in both samples:

$$FP + PRP = NWSSP + AS_f + AS_{pr} \qquad \text{Eq. 4}$$

The NWSSP can be found by rearranging the equation and substituting appropriate values determined using Equations 1, 2, and 3.

$$NWSSP = FP + PRP - AS_f - AS_{pr} \qquad \text{Eq. 5}$$

Sulfate (as Sulfuric Acid Mist) Analysis

The volume of the sample solution was recorded and the pH of the sample determined. If the pH was greater than 3, no ion exchange column was used. The sample volume was diluted to 500 ml with 80 percent IPA. A 100 ml aliquot of this solution was pipetted into a 250 ml Erlenmeyer flask with 2 to 3 drops of thorin indicator and titrated to a pink end point using 0.0100 N barium perchlorate. A blank was titrated for each sample in the same manner.

Several samples required the use of an ion exchange column to remove divalent cations (Cd^{++}, Ca^{++}, Fe^{++}, Zn^{++}). A small ion exchange column approximately 2.4 cm (1 in.) in depth and 1.9 cm (3/4 in.) in diameter was prepared using a strong cation resin.

---

*Particulate with H_2SO_4 converted to $(NH_4)_2SO_4$.

Twenty mls of sample was percolated through the column and collected in a volumetric flask. The column was then rinsed with 20 mls of deionized, distilled water. The 40 ml solution (sample and rinse) was then added to 160 ml of 100 percent IPA and titrated per Method 6.

Sulfur Dioxide Analysis

The sample was diluted to 500 ml with deionized, distilled water. A 20 ml aliquot of this solution was pipetted into a 250 ml Erlenmeyer flask with 80 ml of 100 percent IPA and 2 to 3 drops of thorin indicator. The solution was then titrated to a pink end point using 0.0100 N barium perchlorate. A blank was titrated in the same manner.

Modified December 20, 1979
Laboratory Division
Texas Air Control Board

DETERMINATION OF PARTICULATE IN STACK GASES CONTAINING SULFUR OXIDES

A. GENERAL

Particulate is collected on a glass fiber filter and in the first impinger. The particulate caught is determined gravimetrically after analyzing the samples for ammonia and sulfur trioxide/sulfuric acid. The sulfur trioxide/sulfuric acid is converted to ammonium sulfate and the weight of ammonium sulfate formed subtracted from the total weight. Ammonium sulfate formed from ammonia present in the stack is accounted for separately.

B. APPLICABILITY

This method is applicable to stack samples that may contain sulfur oxides or sulfur oxides and ammonia in appreciable amounts. Fine particulate will penetrate the stack sampling filter and be caught in the first impinger. This particulate will often be water or acid soluble and cannot be determined by a filtration technique. Particulate also cannot be determined gravimetrically in the presence of appreciable sulfuric acid as an inexact amount of water will be retained by the acid. This method converts the acid to a non-hygroscopic, non-volatile product. Results obtained by this technique are 1 to 2% low. If an unheated filter is used then this same technique must be used for analysis of the probe wash and filter.

Ammonia in the stack will combine with the sulfur oxides to form ammonium sulfate. The ammonium sulfate is determined from the amount of ammonia and sulfate present in the sample and reported separately.

Thorin indicator used in the $Ba(ClO_4)_2$ titration is a divalent cation indicator. Any divalent cation such as Cd^{++}, Cu^{++}, Fe^{++}, and Zn^{++} will interfere. An interfering ion will turn the thorin pink as soon as the indicator is added. Therefore sulfur oxides analysis done on the filter and probe wash must be done using an alternate method, such as ion chromatography, if these cations are present.

C. APPARATUS

250 ml beakers
Thermostatically controlled oven, preferably with a fan
Analytical balance with 0.1 mg sensitivity
125 ml Erlenmeyer flask with standard taper joints, matching air condenser
Additional apparatus as specified in the "Determination of Sulfur Dioxide, Sulfur Trioxide, and Sulfuric Acid Mist in Stack Gas"
Additional apparatus as specified in the "Determination of Ammonia", if ammonia is present in the stack

50 ml volumetric flasks
The following equipment is necessary if samples are to be analyzed by ion chromatography:
Dionex Ion Chromatograph equipped with 3 x 250 mm anion separator column and 6 x 250 mm cation suppressor column
Electronic filter to suppress the cyclic signal created by pulsating pressure in the detector cell
Electronic integrator
Pipettors with disposable plastic tips capable of transferring 0.10, 0.25, 0.50, 0.75, and 1.0 ml quantities, either alone or in combination
Sufficient disposable 20 ml plastic beakers
1 - 5 ml plastic syringe, with tapered Luer tip
1 - 4000 ml volumetric flask
3 - 500 ml volumetric flasks
6 - 100 ml volumetric flasks
Membrane filters, 0.45 μm pore size, for aqueous solutions
Apparatus for suction filtration of aqueous solutions

D. REAGENTS

All reagents should be ACS reagent grade

(1) Concentrated ammonium hydroxide (NH_4OH)

(2) Phenolpthalein indicator
Dissolve 0.05 g phenolphthalein in 50 ml ethanol and add 50 ml distilled water

(3) Additional reagents as specified in the "Determination of Sulfur Dioxide, Sulfur Trioxide and Sulfuric Acid Mist in Stack Gas"

(4) Additional reagents as specified in the "Determination of Ammonia"

The following reagents are necessary if samples are to be analyzed by ion chromatography:

(5) Stock $NaHCO_3$ Solution
Dissolve 25.20 g $NaHCO_3$ in distilled water in a 500 ml volumetric flask. Dilute to the mark with distilled water

(6) Stock Na_2CO_3 Solution
Dissolve 25.44 g Na_2CO_3 in distilled water in a 500 ml volumetric flask and dilute to the mark.

(7) Eluent Buffer Solution
Pipet 20 ml $NaHCO_3$ stock solution and 10 ml Na_2CO_3 into a 4000 ml volumetric flask and dilute to volume with distilled water. This solution is 0.003 M in $NaHCO_3$ and 0.0012 M in Na_2CO_3. Filter the solution through a 0.45 μm pore size membrane filter and store in a flexible plastic bottle out of contact with air. (To achieve the desired retention time, separation, etc. the eluent buffer may vary from 0.0009 M carbonate to 0.0015 M carbonate).

(8) Sulfate Stock Standard

Dissolve 0.1109 g anhydrous Na_2SO_4 in distilled water in a 500 ml volumetric flask and dilute to the mark. The solution contains a concentration of 150 µg $SO_4^=$/ml.

E. COLLECTION OF SAMPLE

The sample is collected using a normal stack sampling train set up for isokinetic collection of particulate and SO_3/H_2SO_4 and/or SO_2. An 80% isopropyl alcohol solution is used to trap the SO_3/H_2SO_4 and particulate and a 6% hydrogen peroxide solution is used to trap SO_2.

F. TEST PROCEDURE

(1) Sample Preparation

(a) Pour the probe wash into a 500 ml volumetric flask. Rinse the sample bottle with distilled water. Pour the rinsings into the volumetric flask. Dilute to the mark with distilled water.

(b) Cut the filter into small pieces and place in a 125 ml Erlenmeyer flask equipped with an air condenser. Add 50 ml of distilled water and reflux gently for six to eight hours. Pipet a 5 ml aliquot into a 50 ml volumetric flask. Dilute to the mark with distilled water. Place the rest of the extract and the filter in a 250 ml beaker. Rinse Erlenmeyer flask with three 10 ml portions of distilled water. Pour rinsings into the 250 ml beaker.

(c) Pour the contents of the first impinger into a 500 ml volumetric flask. Rinse the impinger or sample bottle with distilled water several times. Pour the rinsings into the same flask. Dilute to the mark with distilled water.

(2) Ammonia Analysis

Following procedures in "Determination of Ammonia" for analysis and preparation of the standard curve, analyze the probe wash, filter extract, and contents of first impinger for ammonia.

For the probe wash and first impinger use 5 ml aliquots taken from the samples after dilution to 500 ml and dilute with distilled water again to 500 ml. Another dilution may be necessary so extra developed blank should be prepared.

For the filter take a 10 ml aliquot from the diluted sample in the 50 ml volumetric flask and dilute this with distilled water to 100 ml in a volumetric flask. Use this as the sample for ammonia analysis. Another dilution may be necessary, so extra developed blank should be prepared.

(3) Sulfate Analysis

(a) ~~Following procedures in~~ "Determination of Sulfur Dioxide, Sulfur Trioxide, ~~and~~ Sulfuric Acid Mist in Stack Gas" ~~analyze the probe wash, filter extract, and~~ contents of first impinger. For the probe wash and first impinger take 5 ml aliquots taken from the sample after dilution to 500 ml. For the filter extract take 5 ml aliquots from the sample in the 50 ml volumetric flask.

Check the sample pH before beginning titrations. The sample solution should be acidic. If there is excess NH_3, the solution will be basic giving a poor end point for the $Ba(ClO_4)_2$ titration. If the solution is basic, acidify it using HCl.

If divalent cations are present, then thorin indicator will not work. The samples must then be analyzed by ion chromatography.

(b) Procedure for Ion Chromatographic Analysis

Using a pipettor with disposable tips, transfer 0.50 and 1.0 ml $SO_4^=$ stock standard into 100 ml volumetric flasks and dilute to volume with distilled water. These standards contain 0.75 μg $SO_4^=$/ml and 1.50 μg $SO_4^=$/ml.

Set the pump in the ion chromatograph to give an eluent buffer solution flow rate which provides a convenient retention time for $SO_4^=$ and complete separation from other ions. (Eluent buffer strength may also have to be varied). The chromatograph output should be connected through the electronic filter and the integrator to the recorder, in that order. Set the electronic filter so that the signal from the pulsating pressure in the detector cell just disappears from the recorder trace. Transfer portions of the standards and samples to disposable plastic beakers which have been pre-rinsed with distilled water. Inject them into the instrument, taking care to rinse the syringe with eluent or distilled water between solutions and to avoid the introduction of air bubbles into the instrument. Using the integrated values of samples and standards determine the approximate sulfate concentrations. From these values determine the proper range for the standard curve. Prepare and run five standards to cover this range. Using the integrated values for peak areas of standards and samples, calculate a standard curve and from it the $SO_4^=$ concentrations.

(4) Particulate Analysis

(a) Preparation

Allow the beakers to equilibrate in a humidity controlled environment for at least 24 hours before use. Label and weigh sufficient 250 ml beakers for the number of samples and blanks.

(b) Sample Analysis

Place samples in the tared beakers. Boil the samples reducing the volume to approximately 100 ml to remove any residual SO_2. Add 5 drops of phenolpthalein. Add concentrated NH_4OH dropwise until the sample turns pink. This converts all the H_2SO_4 to $(NH_4)_2 SO_4$. The exact amount of NH_4OH added is not important as long as there is an excess to assure that all the H_2SO_4 has been converted.

Evaporate the samples by heating in an oven at a temperature at which the particulate is neither lost nor altered, generally 105° C. Cool the beakers to room temperature and allow them to equilibrate for at least 6 hours in the same humidity controlled environment as before. Weigh the beakers. Place the beakers in the oven again. Heat for at least 2 hours. Cool and allow to equilibrate in the humidity controlled environment for 6 hours. Repeat the process until constant weight (within 0.5 mg or 1% of the particulate weight, which ever is greater) is obtained.

(c) Special Handling

After evaporation, beakers containing deliquescent samples should be placed in desiccators to equilibrate to keep moisture content to a minimum. Weigh to a constant weight as before.

G. CALCULATIONS

(1) Probe Wash and First Impinger

(a) $$g\ NH_3 = \frac{(\mu g\ NH_3/ml)(500\ ml)(500\ ml)}{(5\ ml)(10^6\ \mu g/g)} = (\mu g\ NH_3/ml)(0.05)\ (ml\ g/\mu g)$$

(b) See "Determination of Sulfur Dioxide, Sulfur Trioxide, and Sulfuric Acid Mist in Stack Gas" for standardization calculations.

$$g\ H_2SO_4 = \frac{[\text{Volume Ba}(Cl\ O_4)_2]\ [\text{Normality Ba}(Cl\ O_4)_2]\ [0.049\ g/eq\ l/ml][\text{sample volume}]}{\text{aliquot volume}}$$

$$= [\text{volume Ba}(Cl\ O_4)_2]\ (\text{Normality Ba}(Cl\ O_4)_2]\ [0.049\ g/eq\ l/ml]\ [100]$$

for a 5 ml aliquot, 500 ml sample volume

(c) Particulate

g [Particulate + $(NH_4)_2 SO_4$] = Final beaker weight - Initial beaker wt.

g $(NH_4)_2 SO_4$ from NH_3 and H_2SO_4 in stack =

$$\frac{[g\ NH_3]\ [MW\ (NH_4)_2\ SO_4]}{[MW\ NH_3]\ [2]} = \frac{(g\ NH_3)\ (132.13\ g/mole)}{(17.03\ g/mole)\ (2)} = (g\ NH_3)\ (3.88)$$

g $(NH_4)_2 SO_4$ from H_2SO_4 = g H_2SO_4 (from b) x $\frac{MW(NH_4)_2\ SO_4}{MW\ H_2SO_4}$

= g H_2SO_4 x 1.347

Particulate = g [Particulate + $(NH_4)_2 SO_4$] - [g$(NH_4)_2 SO_4$ from NH_3 and H_2SO_4 in stack] - [g $(NH_4)_2 SO_4$ from H_2SO_4]

(2) Filters

(a) $$g\ NH_3 = \frac{(\mu g\ NH_3/ml)\ (100\ ml)\ (50\ ml)\ (50\ ml)}{(10\ ml)\ \ (5\ ml)\ \ (10^6\ \mu g/g)} = (\mu g\ NH_3/ml)(5x10^{-3})$$

(b) g H_2SO_4

$$\frac{[Volume\ Ba\ (Cl\ O_4)_2]\ [Normality\ Ba\ (Cl\ O_4)_2]\ [0.049\ g/eq\ 1/ml][sample\ vol.]}{aliquot\ volume}$$

$$\frac{[Volume\ Ba\ (Cl\ O_4)_2]\ [Normality\ Ba\ (Cl\ O_4)_2][0.049\ g/eq\ 1/ml][50\ ml][50\ ml]}{[5\ ml]\ \ \ \

H. QUALITY CONTROL

Follow procedures out-lined in "Determination of Ammonia" and "Determination of Sulfur Dioxide, Sulfur Trioxide, and Sulfuric Acid Mist" for ammonia and sulfate analyses.

In addition:

Reweigh 4 out of the batch of clean beakers. If the weight of any one beaker does not agree within 0.5 mg of original weight, then all the beakers must be reweighed.

Reweigh 7% or at least 4 out of a batch of clean filters. If any weight does not agree within 0.5 mg, then the entire batch of filters must be reweighed.

Run a distilled water blank using a known amount of distilled water (at least 200 ml). Follow the procedure in F 4 b. The blank should contain less than 0.1 mg/l solid material.

APPENDIX E

CALIBRATION PROCEDURES AND RESULTS

CALIBRATION PROCEDURES AND RESULTS

All of the equipment used was calibrated according to the procedures outlined in Maintenance, Calibration, and Operation of Isokinetic Source-Sampling Equipment.*

NOZZLE DIAMETER

The nozzles were calibrated by making three separate measurements using different inside diameters and calculating the average. If a deviation of more than 0.002 inches was found the nozzle was either discarded or reamed out and remeasured. A micrometer was used for measuring. These calibration data are shown in Figures E-1a and E-1b.

PITOT TUBE CALIBRATION

The pitot tubes used in sampling were constructed by PEDCo Environmental and met all requirements of Method 2, Section 4.1 of the Federal Register.** Therefore, a baseline coefficient of 0.84 was assigned to each pitot tube. See Figures E-2 and E-3 for alignment requirements of Method 2, and Figures E-4a and E-4b for actual inspection data of the pitot tubes used during the test program.

---

*Office of Air Programs Publication No. APTD-0576.

**40 CFR 60, Appendix A, Reference Method 2, July 1981.

NOZZLE CALIBRATION

Date 11/8/82 Calibrated by C Buffey

Nozzle identification number	D_1, in.	D_2, in.	D_3, in.	ΔD, in.	D_{avg}
Train A -	0.223	0.221	0.223	0.002	0.222
Run 1 B -	.221	0.221	0.222	0.001	0.221
C -	0.224	0.224	0.224	0.0	0.224
D -	0.226	0.226		0.0	0.226

where:

$D_{1,2,3,}$ = nozzle diameter measured on a different diameter, in. Tolerance = measure within 0.001 in.

ΔD = maximum difference in any two measurements, in. Tolerance = 0.004 in.

D_{avg} = average of D_1, D_2, and D_3.

Figure E-1a. Nozzle calibration data.

NOZZLE CALIBRATION

Date 11/9/82 Calibrated by Paul Cla[redacted]

Nozzle identification number	D_1, in.	D_2, in.	D_3, in.	ΔD, in.	D_{avg}
E 2A	.219	.220	.219	.0[redacted]	.219
~~FS-1~~ 2B	~~.218~~ .223	.222	.224	.002	.223
2C	.225	.223	.224	.002	.224
2D	.228	.225	.228	.003	.227

where:

$D_{1,2,3,}$ = nozzle diameter measured on a different diameter, in. Tolerance = measure within 0.001 in.

ΔD = maximum difference in any two measurements, in. Tolerance = 0.004 in.

D_{avg} = average of D_1, D_2, and D_3.

Figure E-1b. Nozzle calibration data.

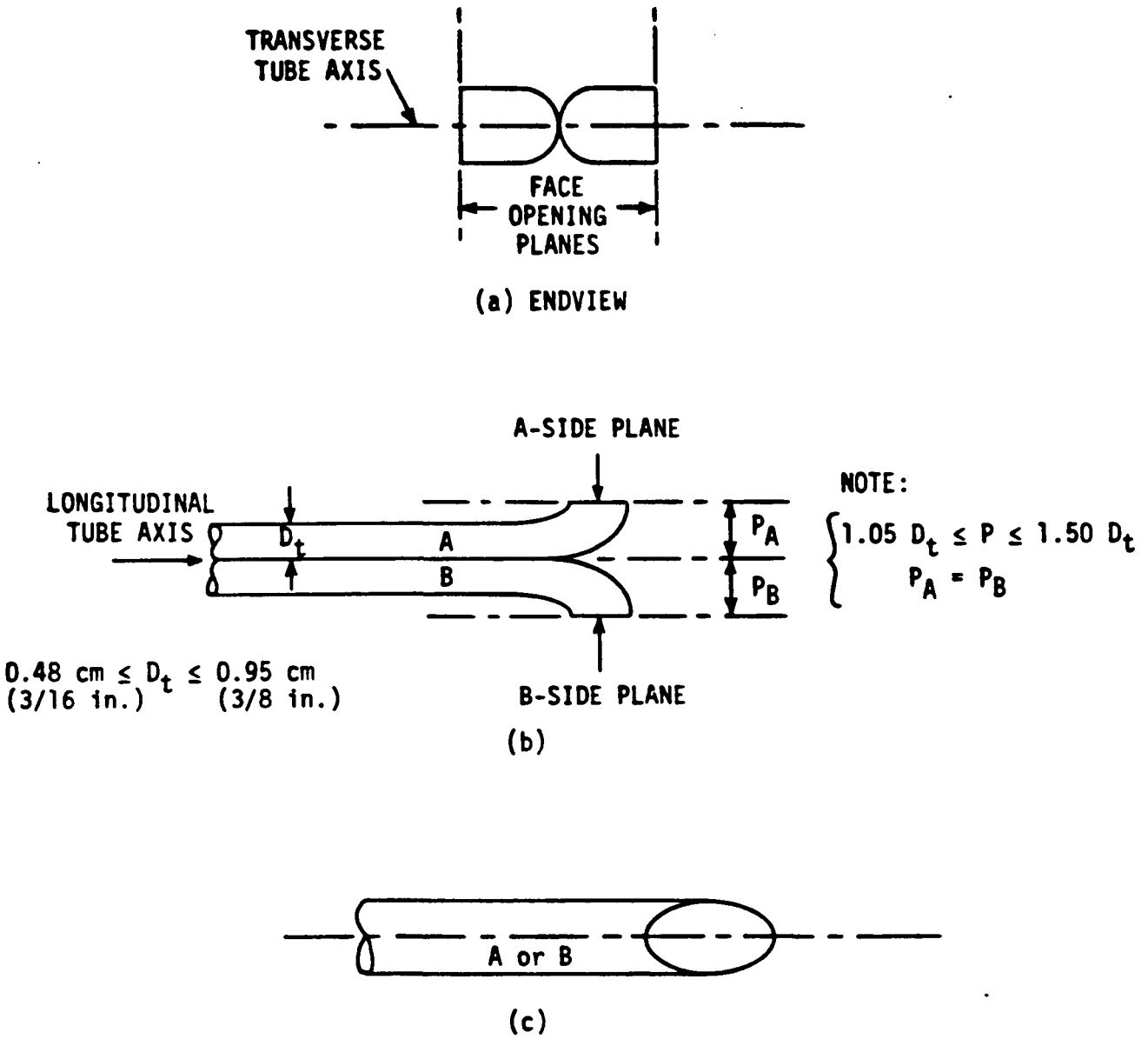

Figure E-2. Properly constructed Type S pitot tube, shown in: (a) end view; face opening planes perpendicular to transverse axis; (b) top view; face opening planes parallel to longitudinal axis; (c) side view; both legs of equal length and centerlines coincident, when viewed from both sides. Baseline coefficient values of 0.84 may be assigned to pitot tubes constructed this way.

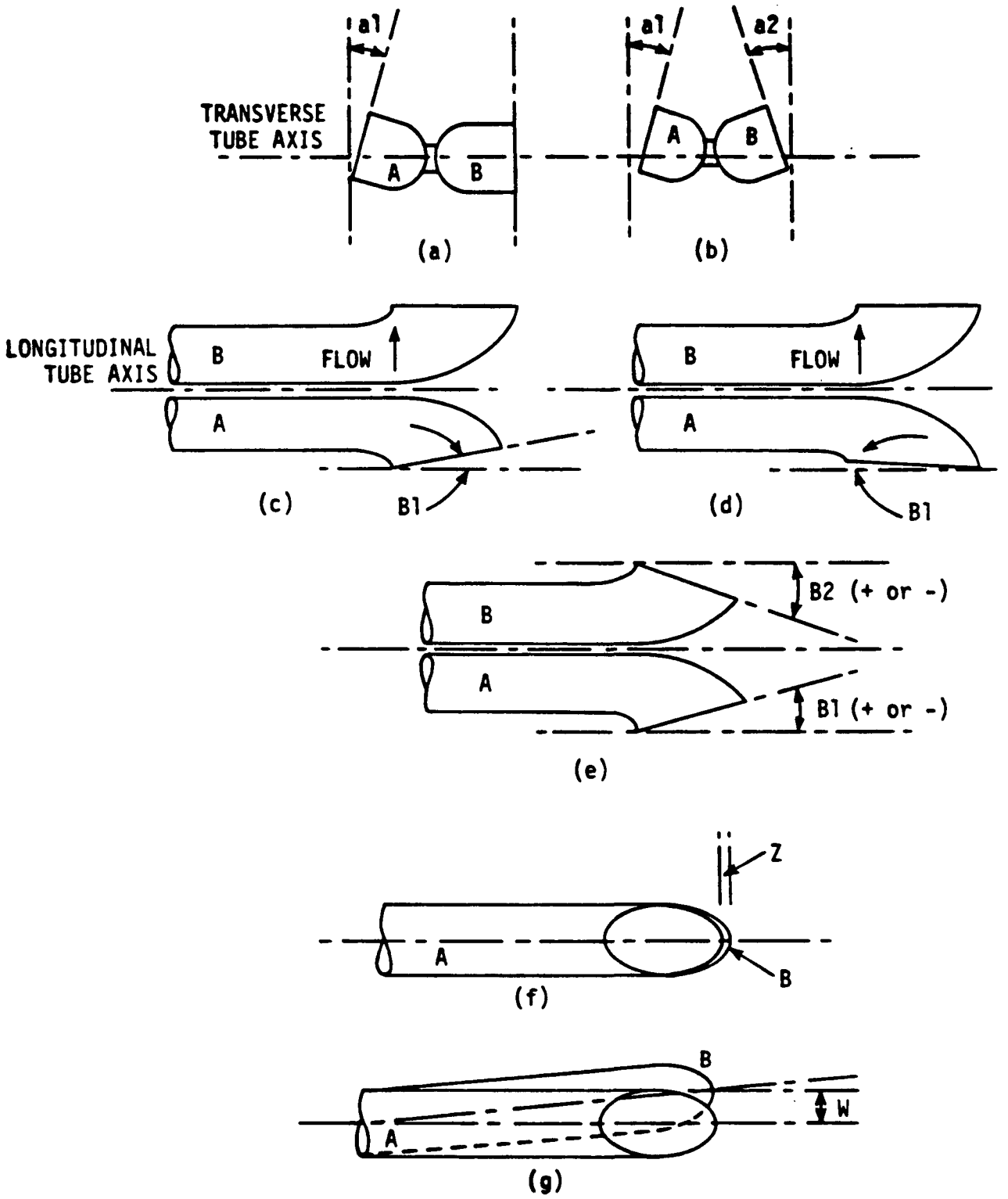

Figure E-3. Types of face-opening misalignment that can result from field use or improper construction of Type S pitot tubes. These will not affect Cp so long as a_1 and a_2 <10°, B_1 and B_2 <5°, z <0.32 (1/8 in.) and w <0.08 cm (1/32 in.).

Pitot Tube No. 278 Date 1/7/62 Inspector B. Armstrong

α_1 Degrees	α_2 Degrees	β_1 Degrees	β_2 Degrees
2.0	1.0	0.0	2.0
<10°	<10°	<5°	<5°

D_t Inches	P Inches	1.05 D_t Inches	1.50 D_t Inches
0.375	0.962	0.394	0.563
$0.185 \leq P_t < 0.380$	-	-	-

γ Degrees	ϕ Degrees	P_{sin} (γ) Inches	P_{sin} (ϕ) Inches
1.0	0.0	0.017	0.000
-	-	<0.125	<0.03125

P_1 Inches	P_2 Inches	$\lvert P_1 - P_2 \rvert$ Inches	Meet specifications
0.600	0.462	0.038	yes
$1.05\ D_t < P_1 < 1.50\ D_t$	$1.05\ D_t < P_2 < 1.50\ D_t$		

Lower line in each table is limits for meeting specifications.

Figure E-4a. Pitot tube inspection data sheet.

Pitot Tube No. #284 Date 1/8/82 Inspector R. ANTESBERGER

α_1 Degrees	α_2 Degrees	β_1 Degrees	β_2 Degrees
2.0	0.0	1.0	1.0
<10°	<10°	<5°	<5°

D_t Inches	P Inches	1.05 D_t Inches	1.50 D_t Inches
.375	1.000	.394	.563
$0.185 \leq P_t < 0.380$	-	-	-

γ Degrees	ϕ Degrees	P_{sin} (γ) Inches	P_{sin} (ϕ) Inches
1.0	1.0	.01745	.01745
-	-	<0.125	<0.03125

P_1 Inches	P_2 Inches	$\lvert P_1 - P_2 \rvert$ Inches	Meet specifications
.500	.500	0.00	
$1.05\ D_t < P_1 < 1.50\ D_t$	$1.05\ D_t < P_2 < 1.50\ D_t$		YES

Lower line in each table is limits for meeting specifications.

Figure E-4b. Pitot tube inspection data sheet.

DRY GAS METER AND ORIFICE METER

Figure E-5 was the set-up used for the initial and post-test calibration. A wet test meter with a 2-cubic-feet-per-minute capacity and ±1 percent accuracy was used. The pump was run for approximately 15 minutes at an orifice manometer setting of 0.5 inch of water to heat up the pump and wet the interior surface of the wet test meter. The information on Figure E-6 (example calculation sheet) was gathered for the initial calibration and then, the ratio of accuracy of the wet test meter to the dry test meter, and the ΔH@ were calculated.

POST-TEST METER CALIBRATION CHECK

A post-test meter calibration check was made on the meter box used during the test to check its accuracy against its last calibration check. This post-test calibration must be within ±5 percent of the initial calibration. The initial calibration was performed as described in APTD-0576. The post-test calibration was performed using the same method as the initial calibration. Three calibration runs were made using the average orifice setting obtained during each test run and with the vacuum set at the average value obtained during each test run. After running the post-test calibration check all three runs were within the ±5 percent range allowed by the Federal Register.*

The initial and post-test meter box calibration data are presented in Figures E-7a through E-7h.

*40 CFR 60, Appendix A, Reference Method 2, July 1981.

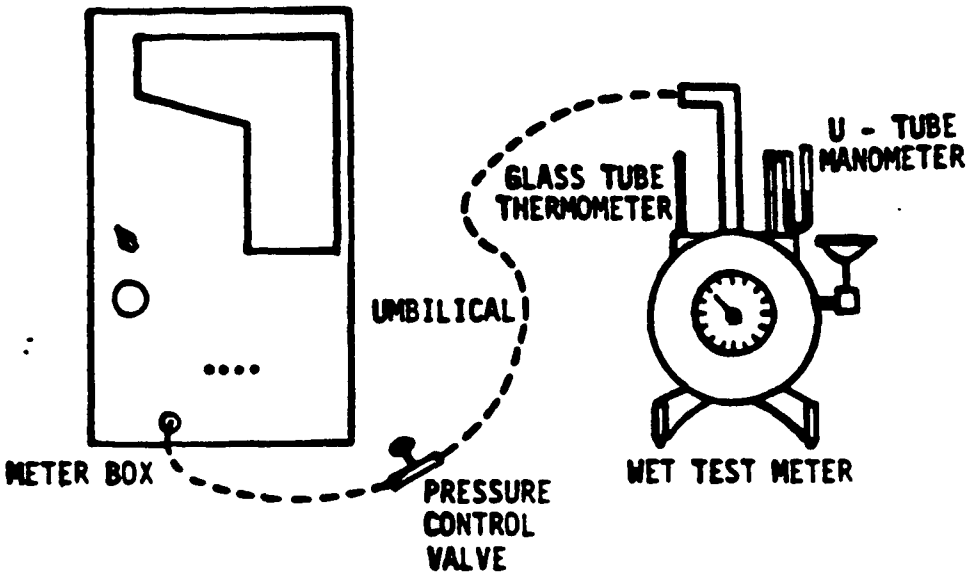

Figure E-5. Calibration setup.

DATE_____ METER BOX NO._____

BAROMETRIC PRESSURE, P_b = _____in. Hg. DRY GAS METER NO._____

Orifice manometer setting ΔH in. H_2O	Gas volume wet test meter V_w, ft_3	Gas volume dry gas meter V_d, ft_3	Wet test meter t_w, °F	Dry gas meter Inlet t_{di}, °F	Dry gas meter outlet t_{do}, °F	Dry gas meter Average t_d, °F	Time θ, min	γ	$\Delta H@$
0.5	5								
1.0	5								
1.5	10								
2.0	10								
3.0	10								
4.0	10								

Average _____

ΔH	$\frac{\Delta H}{13.6}$	γ $\frac{V_w P_b (t_d + 460)}{V_d (P_b + \frac{\Delta H}{13.6}) (t_w + 460)}$	$\Delta H@$ $\frac{0.0317 \Delta H}{P_b (t_d + 460)} \left[\frac{(t_w + 460)\theta}{V_w}\right]^2$
0.5	0.0368		
1.0	0.0737		
1.5	0.110		
2.0	0.147		
3.0	0.221		
4.0	0.294		

γ = Ratio of accuracy of wet test meter to dry test meter. Tolerance = ± 0.01
$\Delta H@$ = Orifice of pressure differential that gives 0.75 cfm of air at 70°F and 29.92 inches of mercury, in H_2). Tolerance = ±0.15.

Figure E-6. Calibration data sheet.

DATE: OCTOBER 8, 1982 METER BOX NO. FB#2

CALIBRATOR: Daniel E. Fitzgerald BAROMETRIC PRESSURE (P_b) 29.48 in. Hg

Leak Checks:

Positive (minimum 5 in. H_2O):

Negative (within 3 in. Hg of absolute): 0.000 cfm* 26.5 in. Hg

*Not to exceed 0.005 cfm.

Orifice manometer setting ΔH in H_2O	Volume wet test meter V_w ft^3	Volume dry gas meter V_d ft^3	Temperatures: Wet test meter T_w °F	Dry gas meter Inlet T_i °F	Dry gas meter Outlet T_o °F	Dry gas meter Average T_d °F	Duration of test θ min	Vacuum setting in Hg	γ	ΔH@ in H_2O
0.5	5.0	942.577	72	73	72	72.75	12 5.8/60	10.5	.9906	1.673
		947.976	72	74	72					
1.0	6.0	948.A2	72	74	72	73.75	10 14.8/60	11.0	.9514	1.664
		954.311	72	76	73					
1.5	14.0	954.606	72	75	73	75.0	20 1.2/60	10.0	.9848	1.745
		968.849	72	78	74					
2.0	12.0	969.042	72	78	74	76.5	15 0.3/60	10.0	.9971	1.775
		981.230	72	79	75					
3.0	54.0	981.604	72	79	75	79.5	55 22.6/60	9.5	.9907	1.790
		036.963	72	85	79					
4.0	11.0	036.937	72	84	79	81.5	9 44.1/60	10.5	.9916	1.762
		045.018	72	84	79					
								Average	0.986	1.73

γ must not deviate by more than ±0.02 γ.
ΔH@ must not deviate by more than 0.15 in H_2O.

ΔH	γ	ΔH@
	$\frac{(V_w)(P_b)(T_d + 460)}{(V_d)(P_b + \Delta H/13.6)(T_w + 460)}$	$\frac{(0.0317)(\Delta H)}{(P_b)(T_d + 460)}\left[\frac{(T_w + 460)(\theta)}{(V_w)}\right]^2$
0.5	$\frac{(5.0)(29.48)(533.75)}{(5.099)(29.52)(532)}$	$\frac{(.0317)(0.5)}{(29.48)(532.75)}\left[\frac{(532)(12.10)}{(5.0)}\right]^2$
1.0	$\frac{(6.0)(29.48)(533.75)}{(6.119)(29.55)(532)}$	$\frac{(.0317)(1.0)}{(29.48)(533.75)}\left[\frac{(532)(10.25)}{(6.0)}\right]^2$
1.5	$\frac{(14.0)(29.48)(535)}{(14.243)(29.59)(532)}$	$\frac{(.0317)(1.5)}{(29.48)(535)}\left[\frac{(532)(10.03)}{(14.0)}\right]^2$
2.0	$\frac{(12.0)(29.48)(536.5)}{(12.188)(29.63)(532)}$	$\frac{(.0317)(2.0)}{(29.48)(536.5)}\left[\frac{(532)(15.01)}{(12.0)}\right]^2$
3.0	$\frac{(54.0)(29.48)(539.5)}{(54.864)(29.70)(532)}$	$\frac{(.0317)(3.0)}{(29.48)(539.5)}\left[\frac{(532)(55.38)}{(54.0)}\right]^2$
4.0	$\frac{(11.0)(29.48)(541.5)}{(11.181)(29.77)(532)}$	$\frac{(.0317)(4.0)}{(29.48)(541.5)}\left[\frac{(532)(9.84)}{(11.0)}\right]^2$

Figure E-7a. Particulate sampling meter box initial calibration.

DATE: 11/19/82 METER BOX NO. FB-2

BAROMETRIC PRESSURE (P_{bar}): 29.69 in. Hg PRETEST Y: .986 ΔH@: 1.73

PLANT: PHILLIPS PETRO. PROJECT NO. 3530-14

PROJECT MANAGER: CHUCK BRUFFEY CALIBRATOR: R. ANTESBERGER

Orifice manometer setting * ΔH in. H_2O	Wet test meter volume V_w ft^3	Dry gas meter volume V_d ft^3	Temperatures: Wet test meter T_w °F	Dry gas meter Inlet T_{di} °F	Dry gas meter Outlet T_{di} °F	Dry gas meter Average T_d °F	Vacuum setting ** in. Hg	Duration of run Ø min	γ	ΔH@
3.0	10	647.790	75	73	72	73.5	15	10 06/60	.999	1.753
		657.780	75	76	73					
3.0	10	657.780	75	76	73	75.75	15	10 07/60	.920	1.752
		667.840	75	80	74					
3.0	11	667.800	75	80	74	78	15	11 03/60	.937	1.745
		678.850	75	82	76					
							Post-test average***		0.995	1.75

γ	ΔH@
$\frac{(V_w)(P_{bar})(T_d + 460)}{(V_d)(P_{bar} + \Delta H/13.6)(T_w + 460)}$	$\frac{(0.0317)(\Delta H)}{(P_{bar})(T_d + 460)}\left[\frac{(T_w + 460)(Ø)}{(V_w)}\right]^2$
$\frac{(10.0)(29.69)(533.5)}{(9.90)(29.91)(535)}$	$\frac{(.0317)(3.0)}{(29.69)(533.5)}\left[\frac{(535)(10.10)}{(10.0)}\right]^2$
$\frac{(10.0)(29.69)(535.75)}{(10.02)(29.91)(535)}$	$\frac{(.0317)(3.0)}{(29.69)(535.75)}\left[\frac{(535)(10.12)}{(10.0)}\right]^2$
$\frac{(11.0)(29.69)(538)}{(11.050)(29.91)(535)}$	$\frac{(.0317)(3.0)}{(29.69)(538)}\left[\frac{(535)(11.13)}{(11.0)}\right]^2$

*To be the average ΔH used during the test series.
**To be the highest vacuum used during the test series.
***Post-test γ must be within the range, pre-test γ ±0.05γ
Post-test ΔH@ must be within the range, pre-test ΔH@ ±0.15

Figure E-7b. Particulate sampling meter box post-test calibration.

DATE: 3/10/82 METER BOX NO. FB-3

CALIBRATOR: Bruce Armstrong BAROMETRIC PRESSURE (P_b) 29.630 in. Hg

Leak Checks:

Positive (minimum 5 in. H_2O): ✓

Negative (within 3 in. Hg of absolute): 0.000 cfm* 27.0 in. Hg

*Not to exceed 0.005 cfm.

Orifice manometer setting ΔH in H_2O	Volume wet test meter V_w ft^3	Volume dry gas meter V_d ft^3	Temperatures: Wet test meter T_w °F	Dry gas meter Inlet T_i °F	Dry gas meter Outlet T_o °F	Dry gas meter Average T_d °F	Duration of test θ min	Vacuum setting in Hg	γ	ΔH@ in H_2O
0.5	11.000	535.000	71.5	78	72	76.5	28 40/60	13.0	1.004	1.91
		546.044	71.5	84	72					
1.0	10.000	546.400	71.5	88	72	79.5	18 44.9/60	13.0	1.003	1.97
		556.492	71.5	87	75					
1.5	10.000	556.800	71.5	87	75	81.8	15 31.3/60	12.0	1.006	2.02
		566.897	71.5	90	75					
2.0	13.000	567.200	71.5	90	75	83.5	17 22.5/60	11.0	1.008	2.03
		580.320	71.5	93	76					
3.0	10.000	580.700	71.5	93	76	84.8	11 00.2/60	10.0	1.008	2.01
		590.786	71.5	94	76					
4.0	17.000	592.200	71.5	94	76	87.0	16 22.5/60	10.0	1.009	2.05
		609.176	71.5	100	78					
								Average	1.006	2.00

γ must not deviate by more than ±0.02 γ.

ΔH@ must not deviate by more than 0.15 in H_2O.

ΔH	γ	ΔH@
	$\frac{(V_w)(P_b)(T_d + 460)}{(V_d)(P_b + \Delta H/13.6)(T_w + 460)}$	$\frac{(0.0317)(\Delta H)}{(P_b)(T_d + 460)}\left[\frac{(T_w + 460)(\theta)}{(V_w)}\right]^2$
0.5	$\frac{(11.000)(29.630)(536.5)}{(11.044)(29.667)(531.5)}$	$\frac{(0.0317)(0.5)}{(29.630)(536.5)}\left[\frac{(531.5)(28.667)}{(11.000)}\right]^2$
1.0	$\frac{(10.000)(29.630)(539.5)}{(10.092)(29.704)(531.5)}$	$\frac{(0.0317)(1.0)}{(29.630)(539.5)}\left[\frac{(531.5)(18.718)}{(10.000)}\right]^2$
1.5	$\frac{(10.000)(29.630)(541.8)}{(10.097)(29.740)(531.5)}$	$\frac{(0.0317)(1.5)}{(29.630)(541.8)}\left[\frac{(531.5)(15.522)}{(10.000)}\right]^2$
2.0	$\frac{(13.000)(29.630)(543.5)}{(13.120)(29.777)(531.5)}$	$\frac{(0.0317)(2.0)}{(29.630)(543.5)}\left[\frac{(531.5)(17.592)}{(13.000)}\right]^2$
3.0	$\frac{(10.000)(29.630)(544.8)}{(10.096)(29.851)(531.5)}$	$\frac{(0.0317)(3.0)}{(29.630)(544.8)}\left[\frac{(531.5)(11.003)}{(10.000)}\right]^2$
4.0	$\frac{(17.000)(29.630)(547.0)}{(17.176)(29.924)(531.5)}$	$\frac{(0.0317)(4.0)}{(29.630)(547.0)}\left[\frac{(531.5)(16.392)}{(17.000)}\right]^2$

Figure E-7c. Particulate sampling meter box initial calibration.

DATE: 11/18/82 METER BOX NO. FB-3

BAROMETRIC PRESSURE (P_{bar}): 29.72 in. Hg PRETEST Y: 1.006 ΔH@: 2.00

PLANT: PHILLIPS PETRO. PROJECT NO. 3530-14

PROJECT MANAGER: CHUCK BOUFFEY CALIBRATOR: R. ANTESBERGER

Orifice manometer setting * ΔH in. H_2O	Wet test meter volume V_w ft^3	Dry gas meter volume V_d ft^3	Temperatures: Wet test meter T_w °F	Dry gas meter Inlet T_{di} °F	Dry gas meter Outlet T_{di} °F	Dry gas meter Average T_d °F	Vacuum setting ** in. Hg	Duration of run θ min	Y	ΔH@
3.0	11	161.870	74	76	68	74.25	10	11 52/60	1.0277	2.016
		172.520	74	83	70					
3.0	11	172.520	74	83	70	78.25	10	12 00/60	1.0281	2.017
		183.225	74	88	72					
3.0	14	183.225	74	88	72	81.5	10	15 12/60	1.0193	2.007
		197.050	74	92	74					
								Post-test average***	1.025	2.01

Y	ΔH@
$\frac{(V_w)(P_{bar})(T_d + 460)}{(V_d)(P_{bar} + \Delta H/13.6)(T_w + 460)}$	$\frac{(0.0317)(\Delta H)}{(P_{bar})(T_d + 460)}\left[\frac{(T_w + 460)(\theta)}{(534\ V_w)}\right]^2$
$\frac{(11.0)(29.72)(534.25)}{(10.650)(29.94)(534)}$	$\frac{(.0317)(3.0)}{(29.72)(534.25)}\left[\frac{(534.0)(11.95)}{(11.0)}\right]^2$
$\frac{(11.0)(29.72)(538.25)}{(10.705)(29.94)(534)}$	$\frac{(.0317)(3.0)}{(29.72)(538.25)}\left[\frac{(534)(12.0)}{(11.0)}\right]^2$
$\frac{(14.0)(29.72)(541.5)}{(13.825)(29.94)(534)}$	$\frac{(.0317)(3.0)}{(29.72)(541.5)}\left[\frac{(534)(15.78)}{(14.0)}\right]^2$

*To be the average ΔH used during the test series.
**To be the highest vacuum used during the test series.
***Post-test Y must be within the range, pre-test Y ±0.05Y
Post-test ΔH@ must be within the range, pre-test ΔH@ ±0.15

Figure E-7d. Particulate sampling meter box post-test calibration.

DATE: MARCH 4, 1982 METER BOX NO. FB#5

CALIBRATOR: [illegible] BAROMETRIC PRESSURE (P_b) 29.10 in. Hg

Leak Checks:

Positive (minimum 5 in. H_2O): [illegible]

Negative (within 3 in. Hg of absolute): 0.000 cfm* 28.5 in. Hg

*Not to exceed 0.005 cfm.

Orifice manometer setting ΔH in H_2O	Volume wet test meter V_w ft^3	Volume dry gas meter V_d ft^3	Temperatures: Wet test meter T_w °F	Dry gas meter: Inlet T_1 °F	Dry gas meter: Outlet T_o °F	Dry gas meter: Average T_d °F	Duration of test θ min	Vacuum setting in Hg	γ	ΔHθ in H_2O
0.5	5.0	245.761	70.5	90	82	86.25	13 34.0/60	7.5	.9899	2.016
		251.755	70.5	91	82					
1.0	5.0	251.318	70.5	90	82	86.75	9 25.3/60	10.0	.9882	1.990
		256.520	70.5	92	83					
1.5	10.0	256.797	70.5	92	83	88.5	15 5.9/60	10.0	.9879	1.912
		266.788	70.5	95	84					
2.0	10.0	267.488	70.5	95	84	90.0	13 5.0/60	10.0	.9873	1.907
		277.935	70.5	97	84					
3.0	10.0	278.352	70.5	96	85	91.0	10 47.3/60	10.0	.9873	1.943
		288.773	70.5	95	85					
4.0	10.0	289.333	70.5	97	85	91.25	9 22.6/60	10.0	.9859	1.957
		299.769	70.5	98	85					
								Average	.9888	1.95

γ must not deviate by more than ±0.02 γ.
ΔHθ must not deviate by more than 0.15 in H_2O.

ΔH	γ	ΔHθ
	$\frac{(V_w)(P_b)(T_d + 460)}{(V_d)(P_b + \Delta H/13.6)(T_w + 460)}$	$\frac{(0.0317)(\Delta H)}{(P_b)(T_d + 460)}\left[\frac{(T_w + 460)(\theta)}{(V_w)}\right]^2$
0.5	$\frac{(5.0)(29.10)(546.25)}{(5.194)(29.14)(530.5)}$	$\frac{(.0317)(.5)}{(29.1)(546.25)}\left[\frac{(530.5)(13.4)}{(5)}\right]^2$
1.0	$\frac{(5.0)(29.10)(546.75)}{(5.202)(29.17)(530.5)}$	$\frac{(.0317)(1.0)}{(29.1)(546.75)}\left[\frac{(530.5)(9.42)}{(5)}\right]^2$
1.5	$\frac{(10.0)(29.10)(548.5)}{(10.426)(29.21)(530.5)}$	$\frac{(.0317)(1.5)}{(29.1)(548.5)}\left[\frac{(530.5)(15.1)}{(10)}\right]^2$
2.0	$\frac{(10.0)(29.10)(550.0)}{(10.447)(29.25)(530.5)}$	$\frac{(.0317)(2.0)}{(29.1)(550.0)}\left[\frac{(530.5)(13.0)}{(10)}\right]^2$
3.0	$\frac{(10.0)(29.10)(551.0)}{(10.441)(29.32)(530.5)}$	$\frac{(.0317)(3.0)}{(29.1)(551.0)}\left[\frac{(530.5)(10.7)}{(10)}\right]^2$
4.0	$\frac{(10.0)(29.10)(551.25)}{(10.436)(29.39)(530.5)}$	$\frac{(.0317)(4.0)}{(29.1)(551.25)}\left[\frac{(530.5)(9.55)}{(10)}\right]^2$

Figure E-7e. Particulate sampling meter box initial calibration.

DATE: 11/18/82 METER BOX NO. F3-5

BAROMETRIC PRESSURE (P_{bar}): 29.72 in. Hg PRETEST Y: 0.988 ΔH@: 1.95

PLANT: PHILLIPS PETRO. PROJECT NO. 3530-14

PROJECT MANAGER: CHUCK BRUFFEY CALIBRATOR: R. ANTESBERGER

Orifice manometer setting * ΔH in. H_2O	Wet test meter volume V_w ft^3	Dry gas meter volume V_d ft^3	Temperatures: Wet test meter T_w °F	Dry gas meter Inlet T_{di} °F	Dry gas meter Outlet T_{di} °F	Dry gas meter Average T_d °F	Vacuum setting ** in. Hg	Duration of run θ min	γ	ΔH@
3.0	~~10~~ 12	854.445	74	80	71	76.75	15	12 23/60	1.0032	1.806
		866.380	74	82	74					
3.0	~~10~~ 11	866.380	74	82	74	79.75	15	11 21/60	1.0011	1.800
		877.405	74	87	76					
3.0	~~10~~ 11	877.405	74	87	76	82.75	15	11 23/60	1.0039	1.796
		888.460	74	90	78					
								Post-test average***	1.003	1.80

γ	ΔH@
$\frac{(V_w)(P_{bar})(T_d + 460)}{(V_d)(P_{bar} + \Delta H/13.6)(T_w + 460)}$	$\frac{(0.0317)(\Delta H)}{(P_{bar})(T_d + 460)}\left[\frac{(T_w + 460)(\theta)}{(V_w)}\right]^2$
$\frac{(12.0)(29.72)(536.75)}{(11.935)(29.94)(\cancel{536.75}\ 534)}$	$\frac{(.0317)(3.0)}{(29.72)(536.75)}\left[\frac{(534)(12.37)}{(12.0)}\right]^2$
$\frac{(11.0)(29.72)(539.75)}{(11.025)(29.94)(534)}$	$\frac{(.0317)(3.0)}{(29.72)(539.75)}\left[\frac{(534)(11.35)}{(11.0)}\right]^2$
$\frac{(11.0)(29.72)(542.75)}{(11.055)(29.94)(534)}$	$\frac{(.0317)(3.0)}{(29.72)(542.75)}\left[\frac{(534)(11.37)}{(11.0)}\right]^2$

*To be the average ΔH used during the test series.
**To be the highest vacuum used during the test series.
***Post-test γ must be within the range, pre-test γ ±0.05γ
Post-test ΔH@ must be within the range, pre-test ΔH@ ±0.15

Figure E-7f. Particulate sampling meter box post-test calibration.

DATE: 1/15/82 METER BOX NO. F3-7

CALIBRATOR: Bruce Armstrong BAROMETRIC PRESSURE (P_b) 29.350 in. Hg

Leak Checks:

Positive (minimum 5 in. H_2O): ✓ NA

Negative (within 3 in. Hg of absolute): 0.001 cfm* 27 in. Hg

*Not to exceed 0.005 cfm.

Orifice manometer setting ΔH in H_2O	Volume wet test meter V_w ft^3	Volume dry gas meter V_d ft^3	Temperatures: Wet test meter T_w °F	Dry gas meter: Inlet T_i °F	Dry gas meter: Outlet T_o °F	Dry gas meter: Average T_d °F	Duration of test θ min	Vacuum setting in Hg	γ	ΔHθ in H_2O
0.5	9.000	024.900	70.0	77	71	76.5	21 54/60	10.0	1.007	1.67
		033.935	70.0	84	74					
1.0	13.000	034.300	70.0	84	74	81.5	22 39/60	10.0	1.003	1.70
		047.510	70.0	92	76					
1.5	12.000	047.704	70.0	92	76	85.8	17 49/60	12.1	1.002	1.69
		059.990	70.0	95	80					
2.0	26.000	060.200	70.0	95	80	89.3	32 35/60	11.0	1.000	1.72
		087.005	70.0	100	82					
3.0	11.000	087.300	70.0	100	82	92.0	11 17.7/60	11.0	0.998	1.74
		098.645	70.0	102	84					
4.0	10.000	099.003	70.0	101	84	92.8	8 55.6/60	10.0	0.997	1.75
		109.365	70.0	102	84					
								Average	1.001	1.71

γ must not deviate by more than ±0.02 γ.

ΔHθ must not deviate by more than ±0.15 in H_2O.

ΔH	γ: $\frac{(V_w)(P_b)(T_d + 460)}{(V_d)(P_b + \Delta H/13.6)(T_w + 460)}$	ΔHθ: $\frac{(0.0317)(\Delta H)}{(P_b)(T_d + 460)}\left[\frac{(T_w + 460)(\theta)}{(V_w)}\right]^2$
0.5	$\frac{(9.000)(29.350)(536.5)}{(9.035)(29.387)(530.0)}$	$\frac{(0.0317)(0.5)}{(29.350)(536.5)}\left[\frac{(530.0)(21.850)}{(9.000)}\right]^2$
1.0	$\frac{(13.000)(29.350)(541.5)}{(13.210)(29.424)(530.0)}$	$\frac{(0.0317)(1.0)}{(29.350)(541.5)}\left[\frac{(530.0)(22.600)}{(13.000)}\right]^2$
1.5	$\frac{(12.000)(29.350)(545.8)}{(12.286)(29.460)(530.0)}$	$\frac{(0.0317)(1.5)}{(29.350)(545.8)}\left[\frac{(530.0)(17.080)}{(12.000)}\right]^2$
2.0	$\frac{(26.000)(29.350)(549.3)}{(26.805)(29.497)(530.0)}$	$\frac{(0.0317)(2.0)}{(29.350)(549.3)}\left[\frac{(530.0)(32.417)}{(26.000)}\right]^2$
3.0	$\frac{(11.000)(29.350)(552.0)}{(11.395)(29.571)(530.0)}$	$\frac{(0.0317)(3.0)}{(29.350)(552.0)}\left[\frac{(530.0)(11.295)}{(11.000)}\right]^2$
4.0	$\frac{(10.000)(29.350)(552.8)}{(10.362)(29.644)(530.0)}$	$\frac{(0.0317)(4.0)}{(29.350)(552.8)}\left[\frac{(530.0)(8.927)}{(10.000)}\right]^2$

Figure E-7g. Particulate sampling meter box initial calibration.

DATE: 11/18/82 METER BOX NO. FB-7

BAROMETRIC PRESSURE (P_{bar}): 29.72 in. Hg PRETEST Y: 1.001 ΔH@: 1.71

PLANT: PHILLIPS PETRO. PROJECT NO. 3530-14

PROJECT MANAGER: CHUCK BRUFFEY CALIBRATOR: T. ANTESBERGER

Orifice manometer setting * ΔH in. H_2O	Wet test meter volume V_w ft^3	Dry gas meter volume V_d ft^3	Temperatures: Wet test meter T_w °F	Dry gas meter Inlet T_{di} °F	Dry gas meter Outlet T_{di} °F	Dry gas meter Average T_d °F	Vacuum setting ** in. Hg	Duration of run θ min	γ	ΔH@
3.0	14	696.025	74	78	73	77.25	15	14 04/60	1.0139	1.715
		709.815	74	82	76					
3.0	11	709.815	74	82	76	79.75	15	11 05/60	1.0135	1.715
		720.705	74	84	77					
3.0	10	720.705	74	84	77	81.25	15	10 04/60	1.0081	1.710
		730.685	74	86	78					
							Post-test average***		1.012	1.71

γ	ΔH@
$\frac{(V_w)(P_{bar})(T_d + 460)}{(V_d)(P_{bar} + \Delta H/13.6)(T_w + 460)}$	$\frac{(0.0317)(\Delta H)}{(P_{bar})(T_d + 460)}\left[\frac{(T_w + 460)(\theta)}{(V_w)}\right]^2$
$\frac{(14.0)(29.72)(537.25)}{(13.790)(29.94)(534)}$	$\frac{(.0317)(3.0)}{(29.72)(537.25)}\left[\frac{(534)(14.07)}{(14.0)}\right]^2$
$\frac{(11.0)(29.72)(539.75)}{(10.89)(29.94)(534)}$	$\frac{(.0317)(3.0)}{(29.72)(539.75)}\left[\frac{(534)(11.08)}{(11.0)}\right]^2$
$\frac{(10.0)(29.72)(541.25)}{(9.98)(29.94)(534)}$	$\frac{(.0317)(3.0)}{(29.72)(541.25)}\left[\frac{(534)(10.07)}{(10.0)}\right]^2$

*To be the average ΔH used during the test series.
**To be the highest vacuum used during the test series.
***Post-test γ must be within the range, pre-test γ ±0.05γ
Post-test ΔH@ must be within the range, pre-test ΔH@ ±0.15

Figure E-7h. Particulate sampling meter box post-test calibration.

THERMOCOUPLES

Thermocouples were calibrated by comparison against an ASTM-2F thermometer at approximately 32°F, ambient temperature, 100°F, and 500°F. The thermocouples read within 1.5 percent of the reference thermometer throughout the entire range when expressed in degrees Rankine. If a thermocouple did not read within 1.5 percent, a correction formula based on a least squares analysis of the data was utilized. The correction formula corrected the data 1.5 percent. Each thermocouple was checked at ambient temperature at the test site to verify the calibration. Calibration data are presented in Figures E-8a and E-8b.

DIGITAL INDICATOR FOR THERMOCOUPLE READOUT

A digital indicator was calibrated by feeding a series of millivolt signals to the input, and comparing the indicator reading with the reading the signal should have generated. Error did not exceed 0.5 percent when the temperatures were expressed in degrees Rankine. Calibration data are shown in Figures E-9a and E-9b.

DRY GAS THERMOMETERS

The dry gas thermometers were calibrated by comparison against an ASTM-2F thermometer at approximately 32°F, at ambient temperature, and at approximately 110°F. The thermometers agreed within 5°F of the reference thermometer. Impinger thermometers were calibrated in the same manner at approximately 32°F and

Date: 5/13/80 Thermocouple No.: 203

Ambient temperature: 79 °F Barometric pressure: 29.24 " Hg

Calibrator: B. Armstrong Reference: ASTM-2F

Reference point No.	Source,* (specify)	Reference thermometer temperature, °F***	Thermocouple temperature, °F	Difference, %**
1	2	79	77	0.37
2	1	34	34	0.00
3	3	140	137	0.50
4	3	477	486	-0.96

Correction factor****: Slope: 0.9759 Intercept: 3.43

Reference point No.	Reference thermometer temperature, °F	Corrected thermocouple temperature, °F	Difference, %**
1	79	79	0.00
2	34	37	-0.61
3	140	137	0.50
4	477	478	-0.11

Critical test points are 32°, 100°, and 500°.

*Source: 1) Ice bath
2) Ambient
3) Furnace

**Percent difference

$$\frac{\text{Reference temp. °F} - \text{thermocouple temp. °F}}{(\text{Reference temp. °F} + 460\text{°F})} \times 100\%$$

Each percent difference must be less than or equal to 1.5%.

***Reference thermometer must be ASTM.

****Correction factor must be determined if any percent difference is >1.5%.

Figure E-8a. Thermocouple calibration data sheet.

THERMOCOUPLE CALIBRATION DATA SHEET

Date: 5/15/80 Thermocouple No.: 147

Ambient temperature: 71 °F Barometric pressure: 29.59 " Hg

Calibrator: B. Amstrong Reference: ASTM 2F

Reference point No.	Source,* (specify)	Reference thermometer temperature, °F***	Thermocouple temperature, °F	Difference, %**
1	2	71	70	0.19
2	1	34	34	0.00
3	3	129	129	0.00
4	3	480	480	0.00

Correction factor****: Slope: _____ Intercept: _____

Reference point No.	Reference thermometer temperature, °F	Corrected thermocouple temperature, °F	Difference, %**

Critical test points are 32°, 100°, and 500°.

*Source: 1) Ice bath
2) Ambient
3) Furnace

**Percent difference

$$\frac{\text{Reference temp. °F} - \text{thermocouple temp. °F}}{(\text{Reference temp. °F} + 460\text{°F})} \times 100\%$$

Each percent difference must be less than or equal to 1.5%.

***Reference thermometer must be ASTM.

****Correction factor must be determined if any percent difference is >1.5%.

Figure E-8b. Thermocouple calibration data sheet

Date 8/9/81 Indicator No. 124 Operator Bruce Armstrong

Test Point No.	Millivolt signal*	Equivalent temperature, °F*	Digital indicator temperature reading, °F	Difference, %
0	**	72.5	73.6	0.21
1		32.0	32.9	0.18
2		198.7	199.8	0.17
3		538.0	539.6	0.16
4		1186.8	1191.0	0.26

Percent difference must be less than or equal to 0.5%.

Percent difference:

$$\frac{(\text{Equivalent temperature °R} - \text{Digital indicator temperature reading °R})(100\%)}{(\text{Equivalent temperature °R})}$$

Where °R = °F + 460°F

*See thermocouple digital indicator calibration verification device calibration for these values.

**This point is ambient temperature. The device is off and therefore is supplying no signal other than ambient temperature.

Figure E-9a. Thermocouple digital indicator calibration data sheet.

Date 8/6/81 Indicator No. 125 Operator B. Armstrong

Test Point No.	Millivolt signal*	Equivalent temperature, °F*	Digital indicator temperature reading, °F	Difference, %
0	**	74	74.5	0.09
1		32.0	33.7	0.35
2		198.7	200.2	0.23
3		538.0	539.2	0.12
4		1186.8	1188.6	0.11

Percent difference must be less than or equal to 0.5%.

Percent difference:

$$\frac{(\text{Equivalent temperature °R} - \text{Digital indicator temperature reading °R})(100\%)}{(\text{Equivalent temperature °R})}$$

Where °R = °F + 460°F

*See thermocouple digital indicator calibration verification device calibration for these values.

**This point is ambient temperature. The device is off and therefore is supplying no signal other than ambient temperature.

Figure E-9b. Thermocouple digital indicator calibration data sheet.

ambient temperature and agreed within 2°F of the reference thermometer. The thermometers were checked prior to each test series at ambient temperature to verify calibration. Calibration data are included in Figures E-10a through E-10d and E-11a through E-11c.

BALANCE

The balance was calibrated by comparison with Class-S standard weights and agreed within 0.5 g. Calibration data are shown in Figure E-12.

BAROMETER

The field barometer was calibrated to within 0.1 in.Hg of an NBS-traceable mercury-in-glass barometer before each test series. The field barometer was checked against the mercury-in-glass barometer after each test series to determine if it read within 0.2 in.Hg. If it did not reading within 0.2 in.Hg, a correction factor was determined for the last test series. Calibration data are included in Figure E-13.

ORSAT ANALYZER

The orsat analyzer was calibrated before each test series by determining the percentages of carbon dioxide, oxygen, and carbon monoxide in a calibration gas containing known percentages of each. The analyzer read within 0.5 percent of the known value for each gas. Calibration data are shown in Figures E-14a through E-14c.

Date: 4/29/82 Meter Box No.: FB-2

Calibrator: B. Armstrong Reference: ASTM-3F

Inlet

Reference point No.	Source*	Reference thermometer temperature, °F	Dry gas thermometer temperature, °F	Difference, °F**
1	2	73.5	70	3.5
2	1	32.0	32.5	0.5
3	3	122.0	120	2.0

Outlet

Reference point No.	Source*	Reference thermometer temperature, °F	Dry gas thermometer temperature, °F	Difference, °F**
1	2	73.5	72	1.5
2	1	32.0	31.5	0.5
3	3	122.0	120	2.0

*Source: 1) Ice bath
2) Ambient
3) Water bath

**Difference must be less than or equal to ±5°F.

Figure E-10a. Dry gas thermometer calibration data sheet.

Date: 6/10/80 Meter Box No.: FB-3

Calibrator: B. Armstrong Reference: ASTM-2F

Inlet

Reference point No.	Source*	Reference thermometer temperature, °F	Dry gas thermometer temperature, °F	Difference, °F**
1	2	72.0	72	0.0
2	1	32.7	32	0.7
3	3	116.0	113	3.0

Outlet

Reference point No.	Source*	Reference thermometer temperature, °F	Dry gas thermometer temperature, °F	Difference, °F**
1	2	72.0	71	1.0
2	1	32.7	30	2.7
3	3	114.0	112	2.0

*Source: 1) Ice bath
2) Ambient
3) Water bath

**Difference must be less than or equal to ±5°F.

Figure E-10b. Dry gas thermometer calibration data sheet.

Date: 6/10/80 Meter Box No.: FB-5

Calibrator: B. Armstrong Reference: ASTM-2F

Inlet

Reference point No.	Source *	Reference thermometer temperature, °F	Dry gas thermometer temperature, °F	Difference, °F**
1	2	72.0	76	4.0
2	1	32.7	35	2.3
3	3	108.0	106	2.0

Outlet

Reference point No.	Source *	Reference thermometer temperature, °F	Dry gas thermometer temperature, °F	Difference, °F**
1	2	72.0	73	1.0
2	1	32.7	34	1.3
3	3	117.5	115	2.5

*Source: 1) Ice bath
2) Ambient
3) Water bath

**Difference must be less than or equal to ±5°F.

Figure E-10c. Dry gas thermometer calibration data sheet.

Date: 6/11/80 Meter Box No.: FB-7

Calibrator: B. Armstrong Reference: ASTM-2F

Inlet

Reference point No.	Source *	Reference thermometer temperature, °F	Dry gas thermometer temperature, °F	Difference, °F**
1	2	72.0	76	4.0
2	1	33.5	38	4.5
3	3	119.0	117	2.0

Outlet

Reference point No.	Source *	Reference thermometer temperature, °F	Dry gas thermometer temperature, °F	Difference, °F**
1	2	72.0	72	0.0
2	1	37.3	37	0.3
3	3	117.0	113	4.0

*Source: 1) Ice bath
2) Ambient
3) Water bath

**Difference must be less than or equal to ±5°F.

Figure E-10d. Dry gas thermometer calibration data sheet.

Date: 6/10/80 Thermometer No.: 104

Ambient temperature: 72 °F Impinger: ✓ NO_x: _____

Calibrator: B. Armstrong Reference: ASTM-2F

Reference point No.	Source *	Reference thermometer temperature, °F	Thermocouple temperature, °F	Difference, °F**
1	2	72	71	1.0
2	1	33.5	32	1.5

*Source: 1) Ice Bath
2) Ambient

**Difference must be less than ±2°F at both points

Figure E-11a. Thermometer calibration data sheet.

Date: 1/14/82 Thermometer No.: 285

Ambient temperature: 72.0 °F Impinger: ✓ NO_x: _____

Calibrator: B. Armstrong Reference: ASTM-3F

Reference point No.	Source *	Reference thermometer temperature, °F	Thermometer temperature, °F	Difference, °F**
1	2	72.0	72.5	0.5
2	1	33.0	34.0	1.0

*Source: 1) Ice Bath
2) Ambient

**Difference must be less than ±2°F at both points

Figure E-11b. Thermometer calibration data sheet.

Date: 1/14/82 Thermometer No.: 290

Ambient temperature: 72.0 °F Impinger: ✓ NO_x: _____

Calibrator: B. Armstrong Reference: ASTM-3F

Reference point No.	Source *	Reference thermometer temperature, °F	Thermometer temperature, °F	Difference, °F**
1	2	72.0	72.0	0.0
2	1	33.0	33.0	0.0

*Source: 1) Ice Bath
2) Ambient

**Difference must be less than ±2°F at both points

Figure E-11c. Thermometer calibration data sheet.

Balance No.	Date	Calibrator	Mass determined for					
			~~5~~ 200 g	Error	~~50~~ 500 g	Error	~~100~~ 1000 g	Error
M-1*	12/7/82	D. Osterhout	200.1	+0.1	500.2	+0.2	1000.4	+0.4

Error must not exceed 0.5 grams at each point.

*Balance was also calibrated by manufacturer on 10/6/82.

Figure E-12. Balance calibration data sheet.

BAROMETER NO.	#229	#226	317	#220	#229	317	
	3-M	PN-5256 MOBILE OIL	[illegible]	[illegible]	AMR Stratford	3530-14 USEPA	
PRETEST							
BAROMETER READING	29.54	29.51	29.45	29.15	29.8	29.52	
REFERENCE BAROMETER READING	29.53	29.48	29.48	[illegible]	29.78	29.52	
DIFFERENCE*	.01	.03	0.03	.04	.12	.00	
DATE	10/8/82	10/8/82	10/14/82	[illegible]	10.25.82	11-1-82	
CALIBRATOR	CMA	PMA	[illegible]	[illegible]	[illegible]	[illegible]	
POST-TEST							
BAROMETER READING	[illegible]		29.44	29.80		29.59	
REFERENCE BAROMETER READING	[illegible]		29.52	29.78		29.59	
DIFFERENCE**	[illegible]		.08	.02		0.00	
DATE	[illegible]		11-1-82	10.25.82		11-1-82	
CALIBRATOR	[illegible]		[illegible]	[illegible]		[illegible]	

*Barometer is adjusted so that difference does not exceed 0.05 in. Hg.
**Barometer is not adjusted. If difference exceed 0.10 in. Hg, inform project manager immediately.

Figure E-13. Barometer calibration log.

Reference Gas: AGA Burdox
Cylinder No. 112704
Invoice No. 0382088
Lab Ref. No. VII:46-23

Orsat No.: 143 Gas (circle one): O_2 CO_2 CO

Calibrator	Date	Value Det.
[illegible]	6/18/82	5.0
D. Schaffel	10.1.82	4.6
[illegible]	11 14 82	11.7
D. Schaffel	11.27.82	4.8

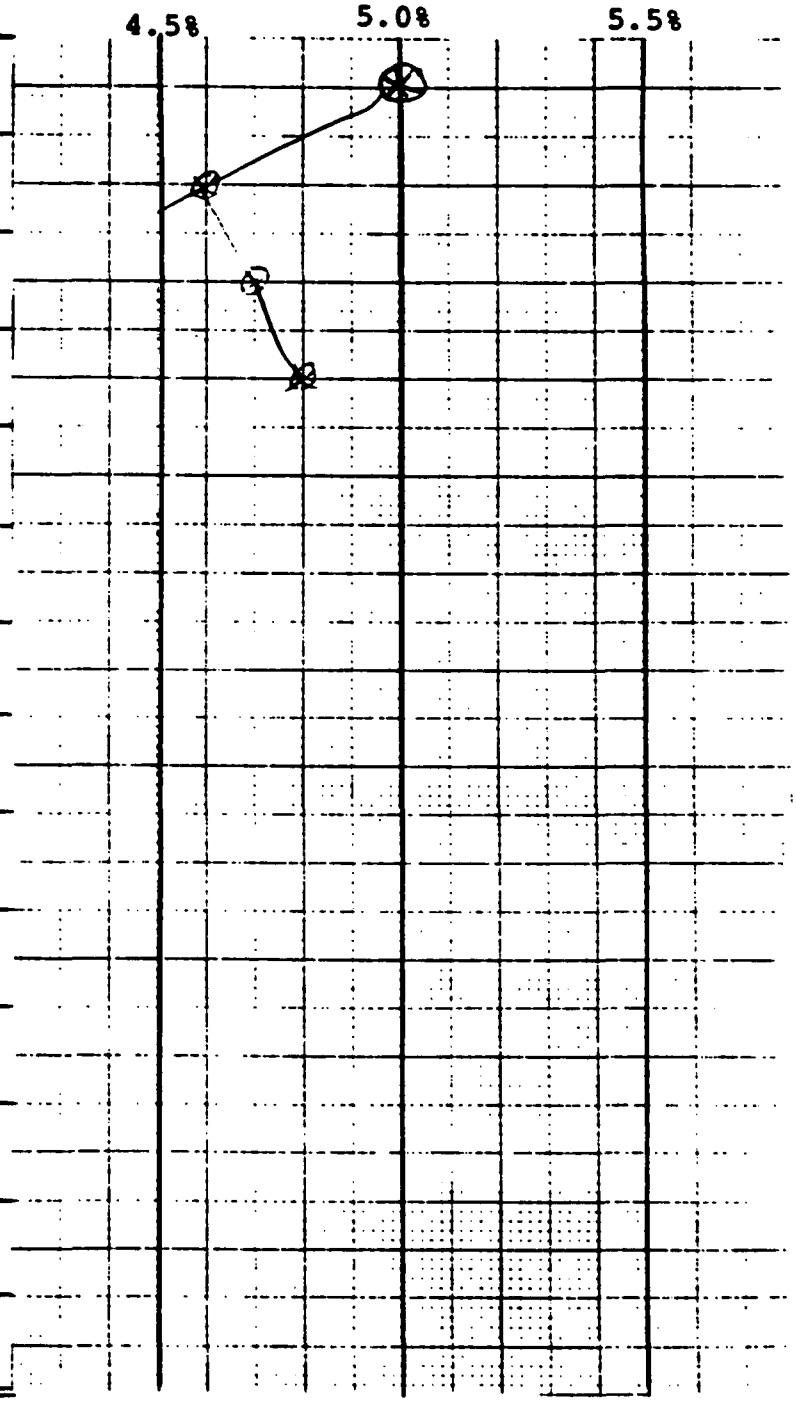

Figure E-14a. Orsat calibration data sheet - CO_2.

Reference Gas: AGA Burdox
Cylinder No. 112704
Invoice No. 0382088
Lab Ref. No. VII:46-23

Orsat No.: 143 Gas (circle one): O_2 CO_2 CO

Calibrator	Date	Value Det.
Jack Grosso	6/15/82	4.8
D. Schaffel	10.1.82	4.6
[illegible]	[illegible]	[illegible]
D. Schaffel	10.27.82	5.0

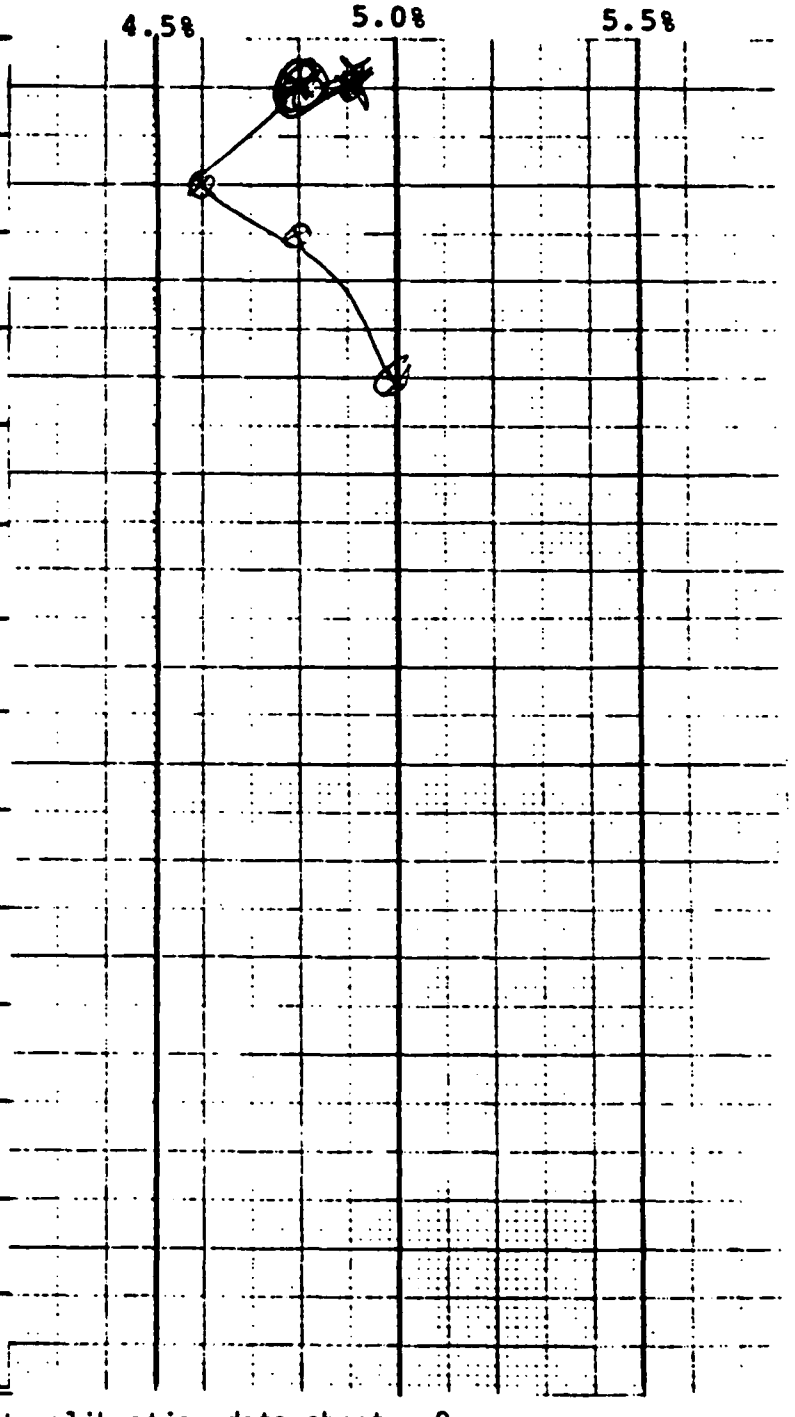

Figure E-14b. Orsat calibration data sheet - O_2.

Reference Gas: AGA Burdox
Cylinder No. 112704
Invoice No. 0382088
Lab Ref. No. VII:46-23

Orsat No.: 143 Gas (circle one): O_2 CO_2 CO

Calibrator	Date	Value Det.
[illegible]	6/18/82	4.7

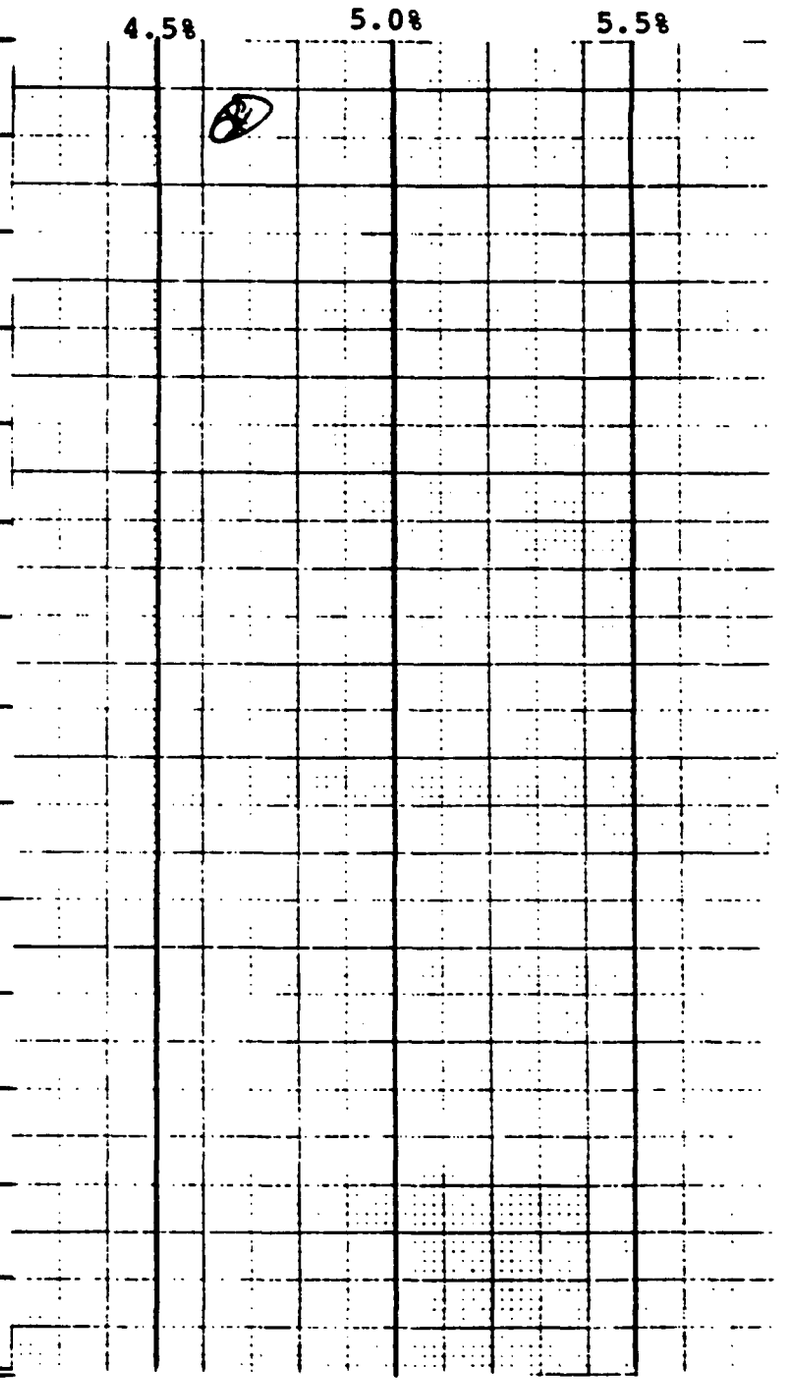

Figure E-14c. Orsat calibration data sheet - CO.

APPENDIX F

QUALITY ASSURANCE SUMMARY

QUALITY ASSURANCE

The following summary addresses the general steps taken to insure data quality and accuracy for any given emission test project.

PROJECT ORGANIZATION AND RESPONSIBILITIES

The project organization and responsibilities of the project team are generally defined in the test plan. Specific responsibilities for this field test are shown in Appendix G, Project Participants.

QUALITY ASSURANCE OBJECTIVE

The primary objective of this program is to develop a modification to EPA Reference Method 5* (or develop a new method) that will minimize the collection of condensible sulfate materials in the measurement of particulate emissions from fluid catalytic cracking unit (FCCU) regenerators. Therefore, all procedures used in the collection and analysis of emission samples were as outlined in applicable EPA reference methods, where applicable. The sample methodology used for this project (quad train - single point) has been previously validated specifically for research and methods development type projects. Test results were presented in several units to allow for their comparison with data from other organizations wishing access to the data summary.

DATA REDUCTION, VALIDATION, AND REPORTING

Data reduction and reporting provide one of the greatest potential sources of system error. To help minimize this source of error, PEDCo performs most test method calculations by use of a validated computer program. The field data sheets are set up on standard computer cards to allow accurate input of data into the computer by individuals unfamiliar with testing procedures. The data printout is then validated by comparison with the field and analytical data sheets. In addition, hand calculation checks generally are made to validate the computer output. Other data validations are made whenever possible.

PERFORMANCE AND SYSTEM AUDITS AND FREQUENCY

When feasible, PEDCo performs both performance and system audits. Three types of performance audits were performed for this test program. All dry gas meter systems were audited for accuracy in the field by the use of a critical orifice. In addition, the analytical procedure for sulfur dioxide was audited for accuracy by the use of audit samples supplied by EPA prior to sample analysis. Also, onsite calculations were used to check the completeness and accuracy of the particulate test data.

SPECIFIC ROUTINE PROCEDURES USED TO ASSESS DATA PRECISION, ACCURACY, AND COMPLETENESS

Because the precision of the standard EPA reference methods used had previously been determined, no further attempt was made to assess data precision. These precision results are summarized

in "The EPA Program for the Standardization of Stationary Source Emission Test Methodology, A Review," EPA-600/4-76-044. The comparability (relative accuracy) of the different methods studies is made using the EPA Method 5 results as the standard. Presently, there is no particulate standard method for the M5B, M5-450, and M5W samples since particulate emissions are defined by regulation as the material collected on a filter and probe at 121°C.

Three audit procedures were used to determine accuracy. Accuracy audit procedures used for the dry gas meter and sulfur dioxide, analysis are the standardized written procedures used by the EPA Quality Assurance Division program. The procedure for determining data completeness is the same as that for New Source Performance Standards, as documented in the Code of Federal Registers 40 CFR 60, Section 60.8

INTERNAL QUALITY CONTROL CHECKS

Several internal quality control checks are usually made for each test. Normally, most of these checks deal with the field sampling analysis. For this test series, control samples for the sulfur dioxide analytical procedures were analyzed. Also, filter and reagent blanks were returned to the laboratory for gravimetric analysis. A quality control check of both the initial and final weighing was thus provided. Results of the control sample checks are included in Section 5. Blanks were analyzed according to procedures used for the M5W and IC analytical work.

CORRECTIVE ACTION

PEDCo has two methods for corrective action. The first involves the use of control limits, such as audit sample results, control sample results, and calibration results. When any of these limits show that the integrity of the data is questionable the procedure is repeated, additional data are collected, or the data are rejected. The second method involves the use of red tags. Whenever any piece of equipment is suspected of producing unacceptable data, the entire apparatus or malfunctioning component is replaced and a red tag is placed on the item. That piece of equipment is then rejected until its ability to perform its function correctly is verified by the proper individuals. The use of numerous control limits and the red tagging system reduces the amount of unacceptable data and provides a system by which to track and correct items and procedures that show an unusally high occurrence of unacceptability.

PREVENTIVE MAINTENANCE PROCEDURES AND SCHEDULES

PEDCo has a very comprehensive preventive maintenance program. Many of the major components of test equipment have pretest checklists. These checklists ensure that all functions are checked and action is taken to repair or replace any part that shows probability of malfunction. The checks are made before every field test series, however, only the control console (meter box) check are recorded. Even though PEDCo's preventive maintenance program and schedule are not in writing, our commitment of

three full-time experienced persons for the express purpose of equipment construction, preparation, calibration, and maintenance has created a program based on experience and skill that cannot be matched by a written guideline.

QUALITY ASSURANCE REPORTS TO MANAGEMENT

The standard quality assurance procedures used in this test program generated sufficient documentation to indicate the data quality. All evidence of the execution of the quality assurance guidelines is reviewed by management. In addition, during weekly meetings of all PEDCo's EMB task managers and project managers, all aspects of the project are discussed including the quality assurance of each task. No written report results from this meeting because all interested parties are verbally apprised of the situation during each meeting.

Two other reports are made to managements, which are not EMB task related. PEDCo's emission test and laboratory groups participants in all national audits by EPA's Quality Assurance Division, and PEDCo's quality assurance coordinator, Tom Wagner, makes several independent checks for management.

APPENDIX G

PROJECT PARTICIPANTS AND SAMPLING LOG

TABLE G-1. FIELD TEST CREW AND RESPONSIBILITIES

Name	Title	Field test assignment
C. Bruffey	Project Manager	Coordinated test activity; sample train setup and disassembly
D. Osterhout	Engineer	Site leader; particulate tests FCCU outlet stack; meter reader quad train
M. Phillips	Engineer	Particulate tests meter reader-quad train
R. Antesberger	Technician	Assisted at sample site; quad train assembly and disassembly
D. Scheffel	Technician	Site leader; clean up area; setup and recovered sample trains
P. Clarke	Engineer	Setup and recovered sample trains; Orsat analysis
W. Kelly	U.S. EPA - EMB	Observer
K.C. Hustvedt	U.S. EPA - ISB/CPB	Observer - process operation

TABLE G-2. SAMPLE LOG

Date (1982)	Activities
November 4-5	Sample site and equipment setup. All initial measurements were obtained. Sample recovery and setup area organized.
November 8	No tests were performed. FCCU was not operational at full load.
November 9	One test run was performed.
November 10-12	Two test runs per day were performed.
November 13	One test run was performed.
November 14	Off-day
November 15	Final test run was performed. Packed equipment and left site.