United States
Environmental Protection
Agency

Office of Air Quality
Planning and Standards
Research Triangle Park NC 27711

EMB Report 84-TRB-7
September 1984

Air

EPA

# Stationary Gas Turbine

# Emission Test Report Crown Zellerbach Antioch Mill Antioch, California

## Volume I

GCA-TR-84-27-G

Prepared for

U.S. ENVIRONMENTAL PROTECTION AGENCY
Office of Air Quality Planning and Standards
Emissions Measurement Branch
Research Triangle Park, NC

Contract No. 68-02-3851
Work Assignment No. 6

George Walsh - Project Officer
Terry Harrison - Task Manager

# EMISSION TEST REPORT
# CROWN ZELLERBACH
# ANTIOCH MILL
# ANTIOCH, CALIFORNIA

VOLUME I

Final Report

September 1984

Prepared by

John W. Podlenski
Donald Neal
Michael O. White
John Foley

GCA CORPORATION
GCA/TECHNOLOGY DIVISION
Bedford, Massachusetts 01730

## DISCLAIMER

This Final Report was furnished to the Environmental Protection Agency by the GCA Corporation, GCA/Technology Division, Bedford, Massachusetts 01730, in fulfillment of Contract No. 68-02-3851, Work Assignment No. 6. The opinions, findings, and conclusions expressed are those of the authors and not necessarily those of the Environmental Protection Agency or the cooperating agencies. Mention of company or product names is not to be considered as an endorsement by the Environmental Protection Agency.

CONTENTS

VOLUME I

Figures . . . . . v
Tables . . . . . vi

1. Introduction . . . . . 1
2. Summary and Discussion of Results . . . . . 2
3. Process and Control Equipment Description and Operating Conditions . . . . . 25
   Process Description . . . . . 25
   Operating Conditions . . . . . 25
4. Sampling Locations . . . . . 29
   Duct Burner Inlet . . . . . 29
   Duct Burner Outlet . . . . . 29
5. Sampling and Analytical Procedures . . . . . 35
   Overview . . . . . 35
   Measurement of Flue Gas Emissions . . . . . 35
   Velocity and Moisture Measurements . . . . . 50
   Measurement of Gas Turbine and Duct Burner Parameters . . . 50
   Fuel Sampling and Analysis . . . . . 52
6. Program Quality Assurance . . . . . 53
   Introduction . . . . . 53
   Precision, Accuracy and Completeness . . . . . 53
   Data Validation . . . . . 59
   Deviations from the Quality Assurance Plan . . . . . 60

References . . . . . 61

Appendix

A. Results and Calculations . . . . . A-1

CONTENTS (continued)

VOLUME II

Appendices


B. Velocity Traverse Field Data . . . . . B-1
C. Moisture Determination Field Data . . . . . C-1
D. Duct Burner Process Data . . . . . D-1
E. Response Time and Stratification . . . . . E-1
F. Drift and Precision Limit Calculations . . . . . F-1
G. Relative Accuracy Field and Reduced Data . . . . . G-1
H. Fuel Analysis Data . . . . . H-1
I. Calibration Gas Certification . . . . . I-1
J. $F_o$ Trend Data . . . . . J-1


VOLUME III

Appendices


K. Daily Calibration Data . . . . . K-1
L. 15-Minute Average Data Summary . . . . . L-1
M. Raw Voltages . . . . . M-1

FIGURES


| Number | | Page |
|---|---|---|
| 1 | General layout of Crown Zellerbach cogeneration power plant . . | 26 |
| 2 | Crown Zellerbach cogeneration facility schematic . . . . . | 30 |
| 3 | Duct burner inlet sampling location . . . . . | 31 |
| 4 | Duct burner inlet sampling port and point locations . . . . . | 32 |
| 5 | Duct burner outlet (stack) sampling location . . . . . | 33 |
| 6 | Duct burner outlet (stack) sample point locations . . . . . | 34 |
| 7 | Schematic of gas turbine/duct burner sample locations . . . . . | 36 |
| 8 | Data acquisition system schematic . . . . . | 40 |
| 9 | Mobile laboratory flow schematic . . . . . | 41 |
| 10 | Valve switching box configuration . . . . . | 42 |
| 11 | Wet sample conditioning system . . . . . | 43 |
| 12 | Dry sample conditioning system . . . . . | 44 |
| 13 | Sample distribution system . . . . . | 45 |
| 14 | CEM sample probe . . . . . | 46 |
| 15 | Schematic of RAC Staksamplr™ in particulate sampling configuration . . . . . | 49 |
| 16 | Schematic of RAC Staksamplr™ in particulate sampling configuration . . . . . | 51 |

TABLES


| Number | | Page |
|---|---|---|
| 1 | Duct Burner Test Data: Test Condition Summary . . . . . | 3 |
| 2 | Duct Burner Test Data: Test Condition 1, Day 23, Time 1600 - 2200 . . . . . | 4 |
| 3 | Duct Burner Test Data: Test Condition 2, Day 18, Time 1130 - 1630 . . . . . | 5 |
| 4 | Duct Burner Test Data: Test Condition 3, Day 16, Time 1615 - 2015 . . . . . | 6 |
| 5 | Duct Burner Test Data: Test Condition 4, Day 24, Time 1015 - 1615 . . . . . | 7 |
| 6 | Duct Burner Test Data: Test Condition 5, Day 19, Time 1000 - 1630 . . . . . | 8 |
| 7 | Duct Burner Test Data: Test Condition 6, Day 23, Time 0900 - 1500 . . . . . | 9 |
| 8 | Duct Burner Test Data: Test Condition 7, Day 20, Time 1000 - 1700 . . . . . | 10 |
| 9 | Duct Burner Test Data: Test Condition 8, Day 15, Time 1830 - 2330 . . . . . | 11 |
| 10 | Duct Burner Test Data: CEM Test Periods . . . . . | 14 |
| 11 | Duct Burner Test Data: CEM Test Periods. Test Condition 2 . . | 15 |
| 12 | Duct Burner Test Data: CEM Test Periods. Test Condition 3 . . | 16 |
| 13 | Duct Burner Test Data: CEM Test Periods. Test Condition 8 . . | 17 |
| 14 | Duct Burner Test Data: CEM Test Periods. Test Condition 9 . . | 18 |
| 15 | Duct Burner Test Data: CEM Test Periods. Test Condition 10 . . | 19 |
| 16 | Duct Burner Test Data: CEM Test Periods. Test Condition 11 . . | 20 |

TABLES (continued)


| Number | | Page |
|---|---|---|
| 17 | Duct Burner Test Data: CEM Test Periods. Test Condition 12 . . | 21 |
| 18 | Duct Burner Test Data: CEM Test Periods. Test Condition 13 . . | 23 |
| 19 | Duct Burner Test Data: CEM Test Periods. Test Condition 14 . . | 24 |
| 20 | Test Conditions for Characterizing Duct Burner Emissions . . . | 27 |
| 21 | Operating Conditions Used to Categorize CEM Data . . . . . | 28 |
| 22 | Duct Burner Test Program Measurement Parameter Summary . . . . | 37 |
| 23 | Sampling Parameters and Methodology for CEMS . . . . . | 39 |
| 24 | Calibration Gas Concentrations . . . . . | 50 |
| 25 | QA Results for Measurements Taken at the Duct Burner Inlet . . | 54 |
| 26 | QA Results for Measurements Taken at the Duct Burner Outlet . . | 55 |
| 27 | Monitor Drift Check During Test Periods . . . . . | 57 |

## SECTION 1

## INTRODUCTION

The objective of this test program was to investigate the effect of a duct burner on emissions in a typical industrial gas turbine cogeneration system. The test program was conducted on a cogeneration power plant located at Crown Zellerbach's recycle paperboard plant in Antioch, California. The cogeneration power plant consists of a 36 MWe gas turbine which is exhausted through a duct burner and waste heat boiler. The unit supplies the total facility's steam and electrical needs, and excess electricity is sold to the local utility. Steam injection is used to control $NO_x$ in the gas turbine. The duct burner uses a rich-lean staged design to limit $NO_x$.

Emissions were characterized from the duct burner as a function of gas turbine and duct burner operating parameters. Measurements were conducted using an EPA IERL/RTP Mobile Continuous Emissions Monitoring System. $NO_x$, CO, $O_2$, and $CO_2$ were monitored concurrently at the duct burner inlet location and the waste heat boiler stack. Flue gas velocity was continuously monitored at the waste heat boiler stack. In addition, flue gas moisture was measured at the inlet and outlet sampling location and flue gas velocity was measured at the outlet using manual test methods.

This report summarizes emissions testing conducted by GCA/Technology Division on the cogeneration facility from January 15-24, 1984. Included in this report is a summary of test results and procedures with associated documentation of field test data, reduced test data, and test conditions. Applicable pretest data, field data, and reduced data are presented in the appendices.

## SECTION 2

## SUMMARY AND DISCUSSION OF RESULTS

Emission testing was conducted at eight gas turbine and duct burner operating conditions defined to characterize the effect of the duct burner on $NO_x$ emissions. For these eight test conditions, plant operators deviated from their normal operation and maintained the duct burner fuel consumption at relatively constant firing rates to facilitate the test program.

In addition to these eight test periods, data were gathered for other operational periods where duct burner fuel consumption rate was controlled by the facility's steam demand. These data were divided into nine test conditions based on gas turbine and duct burner firing rates. Results from the eight duct burner test conditions and the nine additional operational periods are presented and discussed in this section.

An overall summary of $NO_x$ emission data from the eight test conditions is shown in Table 1. Included in the table are gas turbine, duct burner, and waste heat boiler operational parameters, as well as measured emission rates from the gas turbine (duct burner inlet), waste heat boiler (duct burner outlet), and the change in $NO_x$ emissions across the duct burner calculated by difference. The data presented in Table 1 are mean operational and emission values averaged over the test intervals based on hourly means for each test.

Tables 2 through 9 present summaries of hourly emission data for tests 1 through 8. The tables list hourly averages of process and emission values with the mean and standard deviation of each parameter for each test.

Process measurement data were obtained from gas turbine and duct burner control room logs. Fuel flow rates are reported at 60°F and 14.7 psi. Duct burner load percent is based on a full load heat input of 163 MBtu/hr.

Reported moisture values for inlet and outlet locations are calculated from combustion moisture based on the fuel analysis, measured steam injection rates to the gas turbine, and local ambient humidity. Comparison of calculated moisture to moisture measured by Reference Method 4 procedures indicated consistency to within 1 percent by volume or less.

Volumetric flow rate was determined from measured velocity and calculated flow rate based on transducer readings and duct burner fuel flow. Outlet flow rates were determined based on velocity and temperature measurements made at the waste heat boiler stack location. Inlet flow rates were calculated from

TABLE 1. DUCT BURNER TEST DATA: TEST CONDITION SUMMARY

| | Gas turbine operating parameters | | | Duct burner operating parameters | | | Boiler operating parameters | | Ambient conditions | | |
|---|---|---|---|---|---|---|---|---|---|---|---|
| Test condition | Load (MW) | Fuel flow (scfm) | Steam inj. ratio (lb/lb) | Fuel flow (scfm) | Heat input ($10^6$ Btu/hr) | Load (percent) | Total steam flow (lb/hr) | Steam press (psig) | Temp (°F) | Pressure (in hg) | Relative humidity |
| 1 | 33.8 | 7,323 | 0.94 | 2,149 | 133.8 | 82.1 | 263,000 | 584 | 59 | 30.3 | 48.0 |
| 2 | 35.0 | 7,470 | 0.97 | 1,500 | 93.3 | 57.3 | 265,500 | 589 | 53 | 30.2 | 69.5 |
| 3 | 34.5 | 7,416 | 0.95 | 656 | 40.8 | 25.0 | 224,300 | 588 | 58 | 30.2 | 59.5 |
| 4 | 32.0 | 7,065 | 0.50 | 2,210 | 137.5 | 84.4 | 174,800 | 589 | 62 | 30.3 | 25.0 |
| 5 | 32.8 | 7,235 | 0.46 | 703 | 43.8 | 26.8 | 212,300 | 581 | 57 | 30.3 | 39.0 |
| 6 | 31.5 | 7,062 | 0.00 | 2,197 | 136.7 | 83.9 | 278,300 | 594 | 59 | 30.3 | 54.0 |
| 7 | 33.0 | 7,284 | 0.00 | 675 | 42.0 | 25.8 | 201,300 | 591 | 47 | 30.3 | 72.5 |
| 8 | 11.1 | 3,402 | 0.00 | 2,265 | 140.9 | 86.5 | 189,900 | 589 | 50 | 30.3 | 88.5 |

| | Duct burner inlet | | | | | | | | | Duct burner outlet | | | | | | | | Change across DB |
|---|---|---|---|---|---|---|---|---|---|---|---|---|---|---|---|---|---|---|
| Test condition | $H_2O$ (%) | QS (dscfm x $10^3$) | $O_2$ (% dry) | $CO_2$ (% dry) | CO (ppm dry) | $NO_x$ (ppm dry) | $NO_x$ (ppm iso) | $NO_x$ (lb/MBtu) | $NO_x$ (lb/hr) | $H_2O$ (%) | QS (dscfm x $10^3$) | $O_2$ (% dry) | $CO_2$ (% dry) | CO (ppm dry) | $NO_x$ (ppm dry) | $NO_x$ (lb/MBtu) | $NO_x$ (lb/hr) | $NO_x$ (lb/hr) |
| 1 | 9.2 | 199.1 | 15.0 | 3.6 | 5 | 43 | 42 | 0.149 | 61.4 | 11.5 | 196.9 | 12.6 | 4.75 | 24 | 40 | 0.097 | 55.7 | -5.7 |
| 2 | 9.5 | 191.8 | 14.7 | 3.4 | 3 | 43 | 40 | 0.142 | 58.8 | 11.2 | 190.3 | 13.1 | 4.28 | 16 | 43 | 0.113 | 58.9 | 0.1 |
| 3 | 9.5 | 198.8 | 14.9 | 3.4 | 1 | 40 | 39 | 0.134 | 57.5 | 10.6 | 198.1 | 13.7 | 3.91 | 15 | 41 | 0.118 | 58.7 | 1.2 |
| 4 | 8.0 | 198.9 | 15.0 | 3.5 | 7 | 60 | 56 | 0.207 | 85.8 | 9.9 | 196.7 | 12.8 | 4.73 | 16 | 60 | 0.151 | 83.9 | -1.9 |
| 5 | 7.8 | 200.9 | 15.0 | 3.4 | 1 | 66 | 63 | 0.228 | 95.2 | 8.9 | 200.2 | 13.9 | 3.83 | 8 | 65 | 0.192 | 94.0 | -0.6 |
| 6 | 6.5 | 204.9 | 15.2 | 3.4 | 4 | 109 | 107 | 0.392 | 159.7 | 8.8 | 202.7 | 12.7 | 4.66 | 12 | 108 | 0.270 | 156.2 | -3.3 |
| 7 | 6.8 | 209.4 | 15.0 | 3.3 | 1 | 111 | 110 | 0.384 | 166.7 | 7.7 | 208.8 | 14.0 | 3.80 | 8 | 105 | 0.313 | 156.7 | -10.0 |
| 8 | 4.8 | 143.5 | 17.2 | 1.97 | 23 | 29 | 46 | 0.157 | 29.1 | 7.4 | 141.3 | 14.5 | 3.45 | 25 | 41 | 0.132 | 42.1 | 12.7 |

TABLE 2. DUCT BURNER TEST DATA: TEST CONDITION 1, DAY 23, TIME 1600 - 2200

| Time period | Gas turbine operating parameters: Load (MW) | Fuel flow (scfm) | Steam inj. ratio (lb/lb) | Duct burner operating parameters: Fuel flow (scfm) | Heat input ($10^6$ Btu/hr) | Load (percent) | Boiler operating parameters: Total steam flow (lb/hr) | Steam press (psig) |
|---|---|---|---|---|---|---|---|---|
| 1600 - 1700 | 32.9 | 7,142 | 0.946 | 2,198 | 136.7 | 84 | 301,700 | 590 |
| 1700 - 1800 | 32.9 | 7,206 | 0.950 | 2,202 | 137.0 | 84 | 303,100 | 585 |
| 1800 - 1900 | 33.9 | 7,351 | 0.961 | 2,190 | 136.3 | 84 | 304,900 | 578 |
| 1900 - 2000 | 34.2 | 7,398 | 0.915 | 2,189 | 136.2 | 84 | 302,400 | 585 |
| 2000 - 2100 | 34.3 | 7,446 | 0.920 | 2,187 | 136.1 | 83 | 186,500 | 583 |
| 2100 - 2200 | 34.5 | 7,455 | 0.932 | 1,932 | 120.2 | 74 | 177,600 | 585 |
| Avg | 33.8 | 7,333 | 0.937 | 2,149 | 133.8 | 82 | 263,000 | 584 |
| S.D. | 0.7 | 143 | .028 | 210 | 13.1 | 8.0 | 58,407 | 6.6 |

| Time period | Duct burner inlet: $H_2O$ (%) | QS (ascfm x $10^3$) | $O_2$ (% dry) | $CO_2$ (% dry) | CO (ppm dry) | $NO_x$ (ppm dry) | $NO_x$ (ppm iso) | $NO_x$ (lb/MBtu) | $NO_x$ (lb/hr) | Duct burner outlet: $H_2O$ (%) | QS (ascfm x $10^3$) | $O_2$ (% dry) | $CO_2$ (% dry) | CO (ppm dry) | $NO_x$ (ppm dry) | $NO_x$ (lb/MBtu) | $NO_x$ (lb/hr) | Change across DB: $NO_x$ (lb/hr) |
|---|---|---|---|---|---|---|---|---|---|---|---|---|---|---|---|---|---|---|
| 1600 - 1700 | 8.9 | 201.2 | 15.00 | 3.60 | 5 | 44 | 41 | 0.154 | 63.8 | 11.3 | 199.0 | 12.56 | 4.78 | 21 | 42 | 0.103 | 59.5 | -4.3 |
| 1700 - 1800 | 9.2 | 200.3 | 14.97 | 3.56 | 6 | 43 | 41 | 0.148 | 61.6 | 11.5 | 198.1 | 12.56 | 4.77 | 21 | 41 | 0.100 | 57.5 | -4.1 |
| 1800 - 1900 | 9.3 | 198.9 | 14.97 | 3.54 | 6 | 41 | 40 | 0.142 | 58.4 | 11.7 | 196.7 | 12.58 | 4.73 | 26 | 38 | 0.093 | 53.1 | -5.3 |
| 1900 - 2000 | 9.2 | 198.4 | 14.94 | 3.55 | 6 | 43 | 43 | 0.149 | 61.4 | 11.5 | 196.2 | 12.60 | 4.74 | 25 | 39 | 0.096 | 54.8 | -6.7 |
| 2000 - 2100 | 9.2 | 198.1 | 14.92 | 3.64 | 5 | 44 | 43 | 0.150 | 62.0 | 11.5 | 195.9 | 12.60 | 4.74 | 25 | 39 | 0.096 | 54.5 | -7.5 |
| 2100 - 2200 | 9.3 | 197.6 | 14.93 | 3.64 | 4 | 44 | 43 | 0.149 | 61.5 | 11.7 | 195.6 | 12.59 | 4.74 | 26 | 39 | 0.097 | 55.2 | -6.4 |
| Avg | 9.2 | 199.1 | 14.96 | 3.59 | 5 | 43 | 42 | 0.149 | 61.4 | 11.5 | 196.9 | 12.58 | 4.75 | 24 | 40 | 0.097 | 55.7 | -5.7 |
| S.D. | 0.16 | 1.5 | 0.03 | 0.05 | 0.8 | 1.2 | 1.3 | 0.004 | 1.6 | 0.17 | 1.5 | 0.019 | 0.50 | 2.4 | 1.5 | 0.003 | 2.3 | 1.0 |

Note: Means and Standard Deviations are calculated using 15 minute averages.

TABLE 3. DUCT BURNER TEST DATA: TEST CONDITION 2, DAY 18, TIME 1130 - 1630

| Time period | Gas turbine operating parameters: Load (MW) | Fuel flow (scfm) | Steam inj. ratio (lb/lb) | Duct burner operating parameters: Fuel flow (SCFM) | Heat input ($10^6$ Btu/hr) | Load (percent) | Boiler operating parameters: Total steam flow (lb/hr) | Steam press (psig) |
|---|---|---|---|---|---|---|---|---|
| 1130 - 1230 | 35.6 | 7,580 | 0.967 | 1,497 | 93.2 | 57.2 | 222,200 | 593 |
| 1230 - 1330 | 35.4 | 7,514 | 0.977 | 1,498 | 93.2 | 57.2 | 309,200 | 598 |
| 1330 - 1430 | 34.8 | 7,446 | 0.946 | 1,501 | 93.4 | 57.3 | 267,100 | 576 |
| 1430 - 1530 | 34.6 | 7,410 | 0.963 | 1,502 | 93.4 | 57.3 | 263,800 | 587 |
| 1530 - 1630 | 34.6 | 7,400 | 0.987 | 1,501 | 93.4 | 57.3 | 264,800 | 590 |
| Avg | 35.0 | 7,470 | 0.968 | 1,500 | 93.3 | 57.3 | 265,500 | 589 |
| S.D. | 0.5 | 74 | 0.029 | 2.5 | 0.16 | 0.1 | 58,360 | 12 |

| Time period | Duct burner inlet: $H_2O$ (%) | QS (dscfm x $10^3$) | $O_2$ (% dry) | $CO_2$ (% dry) | CO (ppm dry) | $NO_x$ (ppm dry) | $NO_x$ (ppm iso) | $NO_x$ (lb/MBtu) | $NO_x$ (lb/hr) | Duct burner outlet: $H_2O$ (%) | QS (dscfm x $10^3$) | $O_2$ (% dry) | $CO_2$ (% dry) | CO (ppm dry) | $NO_x$ (ppm dry) | $NO_x$ (lb/MBtu) | $NO_x$ (lb/hr) | Change across DB: $NO_x$ (lb/hr) |
|---|---|---|---|---|---|---|---|---|---|---|---|---|---|---|---|---|---|---|
| 1130 - 1230 | 9.6 | 204.7 | 14.72 | 3.41 | 3 | 42 | 41 | 0.140 | 62.0 | 11.2 | 203.1 | 13.11 | 4.28 | 16 | 44 | 0.116 | 64.1 | 2.1 |
| 1230 - 1330 | 9.5 | 207.4 | 14.73 | 3.39 | 2 | 43 | 40 | 0.142 | 63.4 | 11.2 | 205.9 | 13.08 | 4.29 | 15 | 44 | 0.114 | 64.1 | 0.7 |
| 1330 - 1430 | 9.4 | 201.5 | 14.73 | 3.41 | 2 | 43 | 40 | 0.144 | 62.3 | 11.0 | 200.0 | 13.04 | 4.29 | 16 | 42 | 0.109 | 59.6 | -2.7 |
| 1430 - 1530 | 9.5 | 187.9 | 14.74 | 3.41 | 3 | 43 | 40 | 0.142 | 57.5 | 11.2 | 186.4 | 13.02 | 4.28 | 16 | 43 | 0.113 | 57.8 | 0.2 |
| 1530 - 1630 | 9.5 | 157.8 | 14.75 | 3.36 | 3 | 43 | 40 | 0.144 | 48.7 | 11.2 | 156.3 | 13.02 | 4.29 | 16 | 44 | 0.114 | 49.0 | 0.3 |
| Avg | 9.5 | 191.8 | 14.73 | 3.4 | 3 | 43 | 40 | 0.142 | 58.8 | 11.2 | 190.3 | 13.05 | 4.28 | 16 | 43 | 0.113 | 58.9 | 0.1 |
| S.D. | 0.1 | 23.2 | 0.01 | 0.02 | 0.5 | 0.4 | 0.5 | 0.001 | 6.9 | 0.1 | 23.2 | 0.04 | 0.008 | 0.5 | 0.9 | 0.004 | 7.4 | 2.5 |

Note: Means and Standard Deviations are calculated using 15 minute averages.

TABLE 4. DUCT BURNER TEST DATA: TEST CONDITION 3, DAY 16, TIME 1615 - 2015

| Time period | Gas turbine operating parameters: Load (MW) | Fuel flow (scfm) | Steam inj. ratio (lb/lb) | Duct burner operating parameters: Fuel flow (scfm) | Heat input ($10^6$ Btu/hr) | Load (percent) | Boiler operating parameters: Total steam flow (lb/hr) | Steam press (psig) |
|---|---|---|---|---|---|---|---|---|
| 1615 - 1715 | 34.0 | 7,378 | 0.953 | 662 | 41.2 | 25.3 | 223,900 | 593 |
| 1715 - 1815 | 34.5 | 7,415 | 0.952 | 651 | 40.5 | 24.8 | 224,200 | 580 |
| 1815 - 1915 | 34.7 | 7,421 | 0.953 | 655 | 40.7 | 25.0 | 223,800 | 595 |
| 1915 - 2015 | 34.7 | 7,449 | 0.956 | 655 | 40.7 | 25.0 | 225,400 | 585 |
| Avg | 34.5 | 7,416 | 0.954 | 656 | 40.8 | 25.0 | 224,300 | 588 |
| S.D. | 0.4 | 37 | 0.008 | 6 | 0.4 | .2 | 2,427 | 14 |

| Time period | Duct burner inlet: $H_2O$ (%) | QS (dscfm x $10^3$) | $O_2$ (% dry) | $CO_2$ (% dry) | CO (ppm dry) | $NO_x$ (ppm dry) | $NO_x$ (ppm iso) | $NO_x$ (lb/MBtu) | $NO_x$ (lb/hr) | Duct burner outlet: $H_2O$ (%) | QS (dscfm x $10^3$) | $O_2$ (% dry) | $CO_2$ (% dry) | CO (ppm dry) | $NO_x$ (ppm dry) | $NO_x$ (lb/MBtu) | $NO_x$ (lb/hr) | Change across DB: $NO_x$ (lb/hr) |
|---|---|---|---|---|---|---|---|---|---|---|---|---|---|---|---|---|---|---|
| 1615 - 1715 | 9.4 | 207.1 | 14.73 | 3.35 | 2 | 43 | 39 | 0.142 | 63.2 | 10.5 | 206.4 | 13.72 | 3.90 | 15 | 42 | 0.118 | 61.3 | -1.9 |
| 1715 - 1815 | 9.5 | 188.1 | 14.70 | 3.35 | 1 | 41 | 38 | 0.135 | 55.0 | 10.6 | 187.5 | 13.73 | 3.90 | 15 | 42 | 0.119 | 55.9 | 0.9 |
| 1815 - 1915 | 9.6 | 204.7 | 14.69 | 3.38 | 1 | 39 | 37 | 0.130 | 57.9 | 10.7 | 204.0 | 13.71 | 3.91 | 16 | 41 | 0.116 | 59.9 | 2.0 |
| 1915 - 2015 | 9.4 | 195.2 | 14.81 | 3.40 | 1 | 39 | 37 | 0.130 | 54.0 | 10.7 | 194.5 | 13.72 | 3.92 | 15 | 42 | 0.119 | 57.8 | 3.7 |
| Avg | 9.5 | 198.8 | 14.73 | 3.37 | 1 | 41 | 38 | 0.134 | 57.5 | 10.7 | 198.1 | 13.72 | 3.91 | 15 | 42 | 0.118 | 58.7 | 1.2 |
| S.D. | 0.1 | 4.3 | 0.05 | 0.02 | 0.5 | 1.7 | 1.0 | 0.002 | 1.3 | 0.1 | 4.3 | 0.01 | 0.01 | 0.5 | 0.5 | 0.001 | 1.4 | 2.4 |

Note: Means and Standard Deviations are calculated using 15 minute averages.

TABLE 5. DUCT BURNER TEST DATA: TEST CONDITION 4, DAY 24, TIME 1015 - 1615

| | Gas turbine operating parameters | | | Duct burner operating parameters | | | Boiler operating parameters | |
|---|---|---|---|---|---|---|---|---|
| Time period | Load (MW) | Fuel flow (scfm) | Steam inj. ratio (lb/lb) | Fuel flow (scfm) | Heat input ($10^6$ Btu/hr) | Load (percent) | Total steam flow (lb/hr) | Steam press (psig) |
| 1015 - 1115 | 33.0 | 7,228 | 0.486 | 2,188 | 136.1 | 83.5 | 182,900 | 590 |
| 1115 - 1215 | 32.2 | 7,194 | 0.485 | 2,226 | 138.5 | 85.0 | 175,700 | 590 |
| 1215 - 1315 | 31.6 | 7,040 | 0.508 | 2,255 | 140.3 | 86.1 | 178,800 | 593 |
| 1315 - 1415 | 31.8 | 6,909 | 0.508 | 2,211 | 137.8 | 84.4 | 167,800 | 583 |
| 1415 - 1515 | 31.7 | 7,012 | 0.499 | 2,196 | 136.6 | 83.8 | -- | -- |
| 1515 - 1615 | 31.4 | 7,004 | 0.497 | 2,190 | 136.3 | 83.6 | 169,400 | 587 |
| Avg | 32.0 | 7,065 | 0.497 | 2,210 | 137.5 | 84.4 | 174,800 | 589 |
| S.D. | .6 | 136 | .02 | 35 | 2.2 | 1.3 | 6,911 | 7 |

| | Duct burner inlet | | | | | | | | | Duct burner outlet | | | | | | | | Change across DB |
|---|---|---|---|---|---|---|---|---|---|---|---|---|---|---|---|---|---|---|
| Time period | $H_2O$ (%) | QS (dscfm x $10^3$) | $O_2$ (% dry) | $CO_2$ (% dry) | CO (ppm dry) | $NO_x$ (ppm dry) | $NO_x$ (ppm iso) | $NO_x$ (lb/MBtu) | $NO_x$ (lb/hr) | $H_2O$ (%) | QS (dscfm x $10^3$) | $O_2$ (% dry) | $CO_2$ (% dry) | CO (ppm dry) | $NO_x$ (ppm dry) | $NO_x$ (lb/MBtu) | $NO_x$ (lb/hr) | $NO_x$ (lb/hr) |
| 1015 - 1115 | 7.8 | 203.7 | 15.07 | 3.51 | 6 | 62 | 59 | 0.217 | 89.8 | 9.9 | 201.5 | 12.81 | 4.72 | 17 | 62 | 0.156 | 88.8 | -0.9 |
| 1115 - 1215 | 7.8 | 203.2 | 15.07 | 3.52 | 6 | 62 | 59 | 0.216 | 89.6 | 10.0 | 201.0 | 12.75 | 4.75 | 16 | 60 | 0.150 | 85.6 | -4.0 |
| 1215 - 1315 | 7.9 | 197.7 | 15.03 | 3.50 | 5 | 60 | 57 | 0.210 | 85.3 | 10.1 | 195.4 | 12.68 | 4.78 | 16 | 58 | 0.146 | 81.7 | -3.6 |
| 1315 - 1415 | 7.9 | 196.7 | 15.01 | 3.54 | 5 | 60 | 56 | 0.208 | 84.0 | 10.2 | 194.5 | 12.64 | 4.76 | 18 | 58 | 0.144 | 80.9 | -3.0 |
| 1415 - 1515 | 7.9 | 195.7 | 15.02 | 3.47 | 5 | 60 | 57 | 0.209 | 83.9 | 10.1 | 193.5 | 12.68 | 4.76 | 16 | 59 | 0.147 | 81.8 | -2.2 |
| 1515 - 1615 | 8.4 | 196.2 | 14.56 | 3.42 | 10 | 59 | 51 | 0.191 | 83.1 | 9.9 | 194.0 | 12.88 | 4.63 | 13 | 64 | 0.163 | 88.7 | 5.6 |
| Avg | 8.0 | 198.9 | 14.96 | 3.49 | 7 | 60 | 56 | 0.207 | 85.8 | 9.9 | 196.7 | 12.74 | 4.73 | 16 | 60 | 0.151 | 83.9 | -1.9 |
| S.D. | 6.3 | 3.6 | 0.2 | 0.04 | 1.9 | 1.2 | 3.2 | 0.011 | 3.2 | .5 | 3.6 | 0.09 | 0.05 | 1.7 | 2.4 | .007 | 5.1 | 4.6 |

Note: Means and Standard Deviations are calculated using 15 minute averages.

TABLE 6. DUCT BURNER TEST DATA: TEST CONDITION 5, DAY 19, TIME 1000 - 1630

| Time period | Gas turbine operating parameters: Load (MW) | Fuel flow (scfm) | Steam inj. ratio (lb/lb) | Duct burner operating parameters: Fuel flow (scfm) | Heat input ($10^6$ Btu/hr) | Load (percent) | Boiler operating parameters: Total steam flow (lb/hr) | Steam press (psig) |
|---|---|---|---|---|---|---|---|---|
| 1000 - 1100 | 33.5 | 7,279 | 0.468 | 661 | 41.1 | 25.2 | 213,600 | 593 |
| 1100 - 1200 | 32.2 | 7,267 | 0.468 | 677 | 42.1 | 25.8 | 206,900 | 580 |
| 1200 - 1300 | 32.7 | 7,229 | 0.457 | 685 | 42.6 | 26.1 | 210,800 | 563 |
| 1300 - 1400 | 32.4 | 7,204 | 0.456 | 727 | 45.2 | 27.7 | 219,000 | 583 |
| 1400 - 1500 | 32.5 | 7,198 | 0.450 | 650 | 40.4 | 24.8 | 212,100 | 580 |
| 1500 - 1600 | 32.7 | 7,203 | 0.454 | 815 | 50.7 | 31.1 | 208,600 | 587 |
| 1600 - 1630 | 32.8 | 7,267 | 0.435 | 747 | 46.5 | 28.5 | 225,900 | 580 |
| Avg | 32.8 | 7,235 | 0.455 | 703 | 43.8 | 26.8 | 212,300 | 581 |
| S.D. | 0.4 | 35 | 0.014 | 73 | 4.6 | 2.8 | 40,878 | 14.9 |

| Time period | Duct burner inlet: $H_2O$ (%) | QS (dscfm x $10^3$) | $O_2$ (% dry) | $CO_2$ (% dry) | CO (ppm dry) | $NO_x$ (ppm dry) | $NO_x$ (ppm iso) | $NO_x$ (lb/MBtu) | $NO_x$ (lb/hr) | Duct burner outlet: $H_2O$ (%) | QS (dscfm x $10^3$) | $O_2$ (% dry) | $CO_2$ (% dry) | CO (ppm dry) | $NO_x$ (ppm dry) | $NO_x$ (lb/MBtu) | $NO_x$ (lb/hr) | Change across DB: $NO_x$ (lb/hr) |
|---|---|---|---|---|---|---|---|---|---|---|---|---|---|---|---|---|---|---|
| 1000 - 1100 | 7.8 | 194.0 | 14.94 | 3.40 | 2 | 63 | 59 | 0.215 | 86.9 | 8.8 | 193.4 | 13.96 | 3.82 | 8 | 68 | 0.202 | 94.7 | 7.9 |
| 1100 - 1200 | 7.8 | 198.0 | 14.96 | 3.42 | 1 | 64 | 60 | 0.220 | 90.6 | 8.9 | 197.3 | 13.94 | 3.82 | 8 | 64 | 0.188 | 89.9 | -0.6 |
| 1200 - 1300 | 7.9 | 193.4 | 14.97 | 3.40 | 1 | 66 | 63 | 0.229 | 91.7 | 8.9 | 192.8 | 13.93 | 3.81 | 8 | 65 | 0.192 | 90.2 | -0.9 |
| 1300 - 1400 | 7.8 | 203.8 | 14.96 | 3.35 | 2 | 69 | 65 | 0.238 | 100.7 | 8.9 | 203.1 | 13.90 | 3.82 | 8 | 66 | 0.194 | 97.7 | -2.4 |
| 1400 - 1500 | 7.8 | 208.8 | 14.96 | 3.35 | 2 | 68 | 63 | 0.234 | 100.7 | 8.9 | 207.3 | 13.90 | 3.82 | 7 | 65 | 0.191 | 96.8 | -2.9 |
| 1500 - 1600 | 7.8 | 203.6 | 14.96 | 3.38 | 1 | 67 | 63 | 0.232 | 97.9 | 8.9 | 202.8 | 13.89 | 3.83 | 7 | 64 | 0.188 | 93.5 | -4.5 |
| 1600 - 1630 | 7.9 | 207.4 | 14.95 | 3.33 | 1 | 67 | 64 | 0.232 | 100.0 | 9.0 | 206.7 | 13.83 | 3.86 | 7 | 65 | 0.189 | 96.4 | -3.6 |
| Avg | 7.8 | 200.9 | 14.96 | 3.38 | 1 | 66 | 63 | 0.228 | 95.2 | 8.9 | 200.2 | 13.91 | 3.83 | 8 | 65 | 0.192 | 94.0 | -0.6 |
| S.D. | 0.06 | 7.7 | 0.01 | 0.04 | 0.5 | 2.6 | 2.4 | 0.009 | 5.9 | 0.1 | 7.7 | 0.04 | 0.02 | 0.5 | 1.8 | 0.006 | 4.4 | 4.5 |

Note: Means and Standard Deviations are calculated using 15 minute averages.

TABLE 7. DUCT BURNER TEST DATA: TEST CONDITION 6, DAY 23, TIME 0900 - 1500

| Time period | Gas turbine operating parameters: Load (MW) | Gas turbine: Fuel flow (scfm) | Gas turbine: Steam inj. ratio (lb/lb) | Duct burner operating parameters: Fuel flow (scfm) | Duct burner: Heat input ($10^6$ Btu/hr) | Duct burner: Load (percent) | Boiler operating parameters: Total steam flow (lb/hr) | Boiler: Steam press (psig) |
|---|---|---|---|---|---|---|---|---|
| 0900 - 1000 | 32.8 | 7,254 | 0 | 2,229 | 138.7 | 85.1 | 284,600 | 588 |
| 1000 - 1100 | 32.4 | 7,216 | 0 | 2,110 | 131.3 | 80.5 | 276,200 | 593 |
| 1100 - 1200 | 31.2 | 7,017 | 0 | 2,221 | 138.2 | 84.8 | 278,700 | 595 |
| 1200 - 1300 | 30.8 | 6,958 | 0 | 2,198 | 136.8 | 83.9 | 276,600 | 595 |
| 1300 - 1400 | 30.9 | 6,943 | 0 | 2,220 | 138.1 | 84.7 | 276,800 | 600 |
| 1400 - 1500 | 30.8 | 6,983 | 0 | 2,206 | 137.3 | 84.2 | 276,900 | 593 |
| Avg | 31.5 | 7,062 | 0 | 2,1[illegible] | 136.7 | 83.9 | 278,300 | 594 |
| S.D. | 0.8 | 129 | 0 | [illegible] | 2.9 | 1.8 | 4,009 | 9 |

| Time period | Duct burner inlet: $H_2O$ (%) | QS (dscfm x $10^3$) | $O_2$ (% dry) | $CO_2$ (% dry) | CO (ppm dry) | $NO_x$ (ppm dry) | $NO_x$ (ppm iso) | $NO_x$ (lb/MBtu) | $NO_x$ (lb/hr) | Duct burner outlet: $H_2O$ (%) | QS (dscfm x $10^3$) | $O_2$ (% dry) | $CO_2$ (% dry) | CO (ppm dry) | $NO_x$ (ppm dry) | $NO_x$ (lb/MBtu) | $NO_x$ (lb/hr) | Change across DB: $NO_x$ (lb/hr) |
|---|---|---|---|---|---|---|---|---|---|---|---|---|---|---|---|---|---|---|
| 0900 - 1000 | 6.7 | 202.1 | 15.15 | 3.49 | 4 | 103 | 106 | 0.368 | 149.5 | 9.0 | 199.8 | 12.72 | 4.68 | 15 | 104 | 0.261 | 148.9 | -0.6 |
| 1000 - 1100 | 6.6 | 208.4 | 15.21 | 3.41 | 4 | 107 | 108 | 0.385 | 160.7 | 8.9 | 206.3 | 12.81 | 4.62 | 14 | 105 | 0.267 | 155.4 | -4.3 |
| 1100 - 1200 | 6.5 | 209.8 | 15.21 | 3.41 | 4 | 110 | 107 | 0.395 | 164.4 | 8.8 | 207.5 | 12.76 | 4.65 | 12 | 107 | 0.270 | 159.3 | -4.1 |
| 1300 - 1400 | 6.2 | 205.5 | 15.20 | 3.43 | 4 | 111 | 105 | 0.399 | 163.2 | 8.6 | 203.3 | 12.72 | 4.67 | 11 | 109 | 0.273 | 158.4 | -4.5 |
| 1400 - 1500 | 6.5 | 202.3 | 15.19 | 3.40 | 4 | 111 | 107 | 0.398 | 160.8 | 8.8 | 200.0 | 12.71 | 4.67 | 11 | 109 | 0.273 | 156.4 | -4.4 |
| 1500 - 1600 | 6.4 | 201.2 | 15.22 | 3.38 | 4 | 112 | 109 | 0.403 | 160.8 | 8.8 | 199.0 | 12.71 | 4.66 | 11 | 111 | 0.278 | 158.5 | -2.3 |
| Avg | 6.5 | 204.9 | 15.2 | 3.42 | 4 | 109 | 107 | 0.409 | 159.7 | 8.8 | 202.7 | 12.74 | 4.66 | 12 | 108 | 0.270 | 156.2 | -3.3 |
| S.D. | 0.2 | 4.0 | 0.03 | 0.04 | 0 | 4.6 | 4.0 | 0.014 | 7.4 | 0.2 | 4.1 | 0.04 | 0.03 | 2.0 | 2.8 | 0.008 | 5.0 | 3.0 |

Note: Means and Standard Deviations are calculated using 15 minute averages.

TABLE 8. DUCT BURNER TEST DATA: TEST CONDITION 7, DAY 20, TIME 1000 - 1700

| | Gas turbine operating parameters | | | Duct burner operating parameters | | | Boiler operating parameters | |
|---|---|---|---|---|---|---|---|---|
| Time period | Load (MW) | Fuel flow (scfm) | Steam inj. ratio (lb/lb) | Fuel flow (SCFM) | Heat input ($10^6$ Btu/hr) | Load (percent) | Total steam flow (lb/hr) | Steam press (psig) |
| 1000 - 1100 | 33.7 | 7,440 | 0 | 663 | 41.2 | 25.3 | 201,000 | 590 |
| 1100 - 1200 | 33.1 | 7,316 | 0 | 668 | 41.5 | 25.5 | 201,900 | 595 |
| 1200 - 1300 | 33.2 | 7,293 | 0 | 669 | 41.6 | 25.5 | 199,500 | 593 |
| 1300 - 1400 | 32.9 | 7,229 | 0 | 669 | 41.6 | 25.5 | 201,400 | 595 |
| 1400 - 1500 | 32.8 | 7,194 | 0 | 668 | 41.6 | 25.2 | 202,100 | 593 |
| 1500 - 1600 | 32.6 | 7,157 | 0 | 660 | 41.1 | 25.2 | 199,000 | 590 |
| 1600 - 1700 | 32.7 | 7,359 | 0 | 731 | 45.5 | 27.9 | 204,100 | 583 |
| Avg | 33 | 7,284 | 0 | 675 | 42.0 | 25.8 | 201,300 | 591 |
| S.D. | 0.4 | 97 | 0 | 53 | 3.3 | 2.0 | 6,169 | 13 |

| | Duct burner inlet | | | | | | | | | Duct burner outlet | | | | | | | | Change across DB |
|---|---|---|---|---|---|---|---|---|---|---|---|---|---|---|---|---|---|---|
| Time period | $H_2O$ (%) | QS (dscfm x $10^3$) | $O_2$ (% dry) | $CO_2$ (% dry) | CO (ppm dry) | $NO_x$ (ppm dry) | $NO_x$ (ppm iso) | $NO_x$ (lb/MBtu) | $NO_x$ (lb/hr) | $H_2O$ (%) | QS (dscfm x $10^3$) | $O_2$ (% dry) | $CO_2$ (% dry) | CO (ppm dry) | $NO_x$ (ppm dry) | $NO_x$ (lb/MBtu) | $NO_x$ (lb/hr) | $NO_x$ (lb/hr) |
| 1000 - 1100 | 6.7 | 205.4 | 14.98 | 3.37 | 1 | 109 | 109 | 0.378 | 160.6 | 7.6 | 204.8 | 14.05 | 3.81 | 8 | 106 | 0.317 | 155.0 | -5.6 |
| 1100 - 1200 | 6.7 | 203.6 | 14.99 | 3.36 | 1 | 110 | 110 | 0.385 | 161.6 | 7.7 | 202.9 | 14.05 | 3.81 | 8 | 105 | 0.315 | 152.7 | -8.9 |
| 1200 - 1300 | 6.8 | 204.2 | 14.98 | 3.34 | 1 | 111 | 111 | 0.385 | 162.4 | 7.7 | 203.6 | 14.03 | 3.81 | 8 | 105 | 0.313 | 152.8 | -9.7 |
| 1300 - 1400 | 6.9 | 201.6 | 14.97 | 3.35 | 1 | 112 | 112 | 0.388 | 162.2 | 7.8 | 200.9 | 14.02 | 3.81 | 7 | 105 | 0.313 | 150.9 | -11.3 |
| 1400 - 1500 | 6.8 | 210.6 | 14.96 | 3.32 | 1 | 113 | 111 | 0.389 | 170.0 | 7.8 | 209.9 | 14.01 | 3.81 | 7 | 105 | 0.311 | 157.2 | -12.8 |
| 1500 - 1600 | 6.8 | 224.2 | 14.94 | 3.31 | 1 | 113 | 110 | 0.389 | 181.4 | 7.7 | 223.6 | 14.00 | 3.80 | 8 | 104 | 0.308 | 165.9 | -15.5 |
| 1600 - 1700 | 6.7 | 216.5 | 14.96 | 3.36 | 1 | 109 | 106 | 0.375 | 168.7 | 7.6 | 215.8 | 14.03 | 3.77 | 8 | 105 | 0.314 | 162.5 | -6.2 |
| Avg | 6.8 | 209.4 | 14.97 | 3.34 | 1 | 111 | 110 | 0.384 | 166.7 | 7.7 | 208.8 | 14.03 | 3.80 | 8 | 105 | 0.313 | 156.7 | -10.0 |
| S.D. | 0.09 | 10.3 | 0.02 | 0.04 | 0 | 2.6 | 3.0 | 0.008 | 9.5 | 0.1 | 10.3 | 0.03 | 0.02 | 0 | 3.9 | 0.011 | 9.6 | 4.5 |

Note: Means and Standard Deviations are calculated using 15 minute averages.

TABLE 9. DUCT BURNER TEST DATA: TEST CONDITION 8, DAY 15, TIME 1830 - 2330

| Time period | Gas turbine operating parameters: Load (MW) | Gas turbine: Fuel flow (scfm) | Gas turbine: Steam inj. ratio (lb/lb) | Duct burner operating parameters: Fuel flow (scfm) | Duct burner: Heat input ($10^6$ Btu/hr) | Duct burner: Load (percent) | Boiler operating parameters: Total steam flow (lb/hr) | Boiler: Steam press (psig) |
|---|---|---|---|---|---|---|---|---|
| 1830 - 1930 | 10.8 | 3,356 | 0 | 2,305 | 143.4 | 88.0 | 186,300 | 586 |
| 1900 - 2030 | 10.9 | 3,367 | 0 | 2,270 | 141.2 | 86.6 | 188,300 | 587 |
| 2030 - 2130 | 11.1 | 3,405 | 0 | 2,283 | 142.0 | 87.1 | 192,300 | 590 |
| 2130 - 2230 | 11.4 | 3,432 | 0 | 2,294 | 142.7 | 87.5 | 192,900 | 590 |
| 2230 - 2330 | 11.5 | 3,464 | 0 | 2,143 | 133.3 | 81.8 | 187,300 | 590 |
| Avg | 11.1 | 3,402 | 0 | 2,265 | 140.9 | 86.5 | 189,900 | 589 |
| S.D. | 0.3 | 42 | 0 | 63 | 3.9 | 2.4 | 3,304 | 3 |

| Time period | Duct burner inlet: $H_2O$ (%) | QS (dscfm x $10^3$) | $O_2$ (% dry) | $CO_2$ (% dry) | CO (ppm dry) | $NO_x$ (ppm dry) | $NO_x$ (ppm iso) | $NO_x$ (lb/MBtu) | $NO_x$ (lb/hr) | Duct burner outlet: $H_2O$ (%) | QS (dscfm x $10^3$) | $O_2$ (% dry) | $CO_2$ (% dry) | CO (ppm dry) | $NO_x$ (ppm dry) | $NO_x$ (lb/MBtu) | $NO_x$ (lb/hr) | Change across DB: $NO_x$ (lb/hr) |
|---|---|---|---|---|---|---|---|---|---|---|---|---|---|---|---|---|---|---|
| 1830 - 1930 | 4.7 | 186.7 | 17.24 | 1.93 | 26 | 28 | 45 | 0.154 | 36.9 | 7.4 | 184.4 | 14.53 | 3.43 | 26 | 41 | 0.133 | 54.4 | 17.5 |
| 1930 - 2030 | 4.8 | 163.3 | 17.21 | 1.96 | 25 | 28 | 45 | 0.154 | 32.4 | 7.4 | 161.0 | 14.55 | 3.42 | 26 | 40 | 0.129 | 46.2 | 13.8 |
| 2030 - 2130 | 4.8 | 126.5 | 17.17 | 1.93 | 23 | 28 | 46 | 0.157 | 25.7 | 7.4 | 124.2 | 14.49 | 3.45 | 25 | 42 | 0.134 | 38.0 | 11.6 |
| 2130 - 2230 | 4.8 | 105.0 | 17.11 | 1.99 | 20 | 30 | 47 | 0.160 | 22.3 | 7.4 | 102.7 | 14.44 | 3.50 | 24 | 41 | 0.130 | 30.2 | 7.9 |
| 2230 - 2330 | 4.8 | 133.8 | 17.15 | 2.02 | 20 | 29 | 47 | 0.160 | 28.3 | 7.4 | 131.6 | 14.47 | 3.44 | 25 | 42 | 0.136 | 40.5 | 12.2 |
| Avg | 4.8 | 143.5 | 17.18 | 1.97 | 23 | 29 | 46 | 0.157 | 29.1 | 7.4 | 141.3 | 14.5 | 3.45 | 25 | 41 | 0.132 | 42.1 | 12.7 |
| S.D. | 0.04 | 35.0 | 0.05 | 0.04 | 3 | 1.1 | 1.1 | 0.004 | 6.7 | 0.05 | 35.0 | 0.06 | 0.04 | 0.9 | 1.5 | 0.004 | 10.5 | 3.9 |

Note: Means and Standard Deviations are calculated using 15 minute averages.

outlet flow rate data and a volumetric calculation based on combustion stoiciometry in the duct burner and fuel flow. Corrections to a dry basis for outlet flow rates were made from calculated moisture values.

For the primary purpose of determining the contribution of $NO_x$ due to the duct burner, no significant error is introduced by uncertainty in the true duct burner outlet dry standard volumetric flow rate. This is because the inlet dry standard volumetric flow rate was calculated from the outlet flow rate and the stoichiometry of the fuel combusted in the duct burner. Therefore, any error associated with the measurement of the outlet volumetric flow rate for any time period was also in the calculated duct burner inlet volumetric flow rate and was subtracted in the calculation of the duct burner lb $NO_x$ per hour data calculation. Velocity traverses were performed during the duct burner test periods and for some of these periods significant differences exist between the system lb $NO_x$ per hour values obtained using velocity traverse data and continuous transducer data.

Any error on the calculated dry duct burner inlet volumetric flow rate introduced by measurement of the duct burner fuel consumption was minimal since the entire effect of the duct burner fuel consumption was 3 percent or less of the total flow rate.

Emission measurements were made in central points in the inlet and outlet ducts. Based on initial stratification test data, this deviation in Method 20 procedures for $O_2$ and $NO_x$ measurements was supported by the uniform concentrations observed at both sampling locations.

Reported CO concentrations were corrected from measured CO concentrations for $CO_2$ interference with an interference curve generated after the test program. This correction was necessary because no ascarite was used prior to the CO instrument to remove $CO_2$ from the sample gas stream. Corrections to measured CO concentrations due to $CO_2$ interference averaged approximately 10 ppm CO on a dry basis.

$NO_x$ concentration was measured on a wet basis and was converted to a dry basis with the moisture values calculated from stoichiometric combustion moisture, measured steam injection flow rates, and local ambient humidity. $NO_x$ emission rates (lbs/hr) were calculated with corrected $NO_x$ concentrations using outlet flow rates measured with a pressure transducer positioned in the outlet stack and inlet flow rates determined from fuel flow and outlet flow rate data. These calculation procedures were chosen to minimize the impact of measurement errors on calculated duct burner emission rates (lbs/hr) and to maintain consistency throughout the test program.

In addition, $NO_x$ emissions are reported on a lb/MBtu basis utilizing the F factor method. Values reported are calculated with the dry oxygen based F factor.

A summary of data reduction techniques and a detailed documentation of data reduction programs is included in Appendix A. Also included in Appendix A is a summary table of emission data from the entire CEM test period calculated by $F_D$ and $F_C$ factors, transducer readings, and velocity traverses.

Tables 10 through 19 present hourly averages of process and emission data for test periods defined over continuous monitoring of the duct burner. The tables summarize gas turbine and duct burner fuel flow, steam injection and emission rates. Calculation procedures for continuous monitoring data were the same as those used for test condition data.

## TABLE 10. DUCT BURNER TEST DATA: CEM TEST PERIODS

| Test condition | Gas turbine operating parameters: Load (MW) | Fuel flow (scfm) | Steam inj. ratio (lb/lb) | Duct burner operating parameters: Fuel flow (scfm) | Heat input ($10^6$ Btu/hr) | Load (percent) | Ambient conditions: Temp (°F) | Pressure (in hg) | Relative humidity (%) |
|---|---|---|---|---|---|---|---|---|---|
| 1 | 13.8 | 3,752 | 0.74 | 2,312 | 143.8 | 88 | 55 | 30.1 | 92.0 |
| 2 | 34.6 | 7,288 | 0.96 | 1,372 | 85.4 | 52 | 54 | 30.3 | 77.8 |
| 3 | 35.0 | 7,534 | 0.97 | 1,030 | 64.1 | 39 | 51 | 30.2 | 83.3 |
| 9 | 12.8 | 3,803 | 0.93 | 1,811 | 112.7 | 69 | 50 | 30.2 | 85.0 |
| 10 | 12.6 | 3,591 | 0.77 | 897 | 55.8 | 34 | 50 | 30.2 | 66.0 |
| 11 | 28.5 | 6,370 | 0.72 | 879 | 54.7 | 34 | 52 | 30.2 | 58.5 |
| 12 | 12.9 | 3,686 | 0.76 | 2,149 | 133.7 | 82 | 52 | 30.3 | 83.7 |
| 13 | 12.8 | 3,750 | 0.71 | 1,891 | 117.6 | 72 | 54 | 30.2 | 77.1 |
| 14 | 14.4 | 3,756 | 0.71 | 1,136 | 70.7 | 43 | 51 | 30.3 | 93.9 |

| Test condition | Duct burner inlet: $H_2O$ (%) | QS (dscfm x $10^3$) | $O_2$ (% dry) | $CO_2$ (% dry) | CO (ppm dry) | $NO_x$ (ppm dry) | $NO_x$ (ppm iso) | $NO_x$ (lb/MBtu) | $NO_x$ (lb/hr) | Duct burner outlet: $H_2O$ (%) | QS (dscfm x $10^3$) | $O_2$ (% dry) | $CO_2$ (% dry) | CO (ppm dry) | $NO_x$ (ppm dry) | $NO_x$ (lb/MBtu) | $NO_x$ (lb/hr) | Change across Db: $NO_x$ (lb/hr) |
|---|---|---|---|---|---|---|---|---|---|---|---|---|---|---|---|---|---|---|
| 1 | 6.3 | 107.1 | 16.9 | 2.16 | 52 | 20 | 30 | 0.104 | 15.4 | 9.3 | 104.8 | 13.8 | 3.79 | 34 | 25 | 0.072 | 18.4 | 3.0 |
| 2 | 9.5 | 201.3 | 14.8 | 3.56 | 4 | 40 | 39 | 0.136 | 57.9 | 11.1 | 200.0 | 13.2 | 4.23 | 14 | 44 | 0.116 | 60.1 | 2.2 |
| 3 | 9.6 | 212.2 | 14.7 | 3.58 | 4 | 39 | 37 | 0.128 | 58.8 | 10.8 | 211.1 | 13.5 | 4.11 | 18 | 39 | 0.107 | 58.8 | 0.0 |
| 9 | 6.8 | 191.0 | 16.8 | 2.19 | 14 | 35 | 52 | 0.178 | 48.3 | 9.0 | 189.2 | 14.6 | 3.37 | 24 | 45 | 0.147 | 61.3 | 13.0 |
| 10 | 5.6 | 174.9 | 17.3 | 2.17 | 86 | 15 | 24 | 0.085 | 18.9 | 7.3 | 174.0 | 15.7 | 2.58 | 81 | 10 | 0.041 | 13.1 | -5.8 |
| 11 | 7.2 | 208.9 | 15.9 | 2.95 | 7 | 35 | 40 | 0.143 | 57.8 | 8.6 | 208.0 | 14.7 | 3.34 | 16 | 30 | 0.098 | 44.6 | -7.2 |
| 12 | 6.3 | 174.1 | 17.0 | 2.17 | 74 | 19 | 29 | 0.100 | 23.1 | 8.8 | 172.0 | 14.4 | 3.5 | 46 | 20 | 0.062 | 22.0 | -1.1 |
| 13 | 6.6 | 172.4 | 16.8 | 2.20 | 71 | 20 | 28 | 0.097 | 24.2 | 8.7 | 170.5 | 14.5 | 3.41 | 48 | 17 | 0.056 | 21.2 | -3.0 |
| 14 | 6.4 | 170.9 | 16.9 | 2.38 | 41 | 19 | 28 | 0.095 | 22.6 | 8.3 | 169.7 | 15.1 | 2.97 | 43 | 13 | 0.046 | 15.8 | -6.9 |

Note: Means and Standard Deviations are calculated using 15 minute averages.

TABLE 11. DUCT BURNER TEST DATA: CEM TEST PERIODS, TEST CONDITION 1

| | Gas turbine operating parameters | | | Duct burner operating parameters | | | Ambient conditions | | |
|---|---|---|---|---|---|---|---|---|---|
| Day/hour | Load (MW) | Fuel flow (scfm) | Steam inj. ratio (lb/lb) | Fuel flow (scfm) | Heat input ($10^6$ Btu/hr) | Load (percent) | Temp (°F) | Pressure (in hg) | Relative humidity (%) |
| 16 23 | 12.3 | 3,506 | 0.80 | 2,333 | 145.2 | 89 | 54 | 30.1 | 92.0 |
| 17 2 | 14.4 | 3,821 | 0.70 | 2,286 | 142.2 | 87 | 57 | 30.1 | 92.0 |
| 17 3 | 14.3 | 3,808 | 0.71 | 2,315 | 144.0 | 88 | 55 | 30.1 | 92.0 |
| 17 4 | 14.2 | 3,875 | 0.73 | 2,314 | 144.0 | 88 | 53 | 30.1 | 92.0 |
| Avg | 13.8 | 3,752 | 0.74 | 2,312 | 143.8 | 88 | 55 | 30.1 | 92.0 |
| S.D. | 1.0 | 167 | 0.05 | 19 | 1.2 | 1 | 2 | 0 | 0 |

| | Duct burner inlet | | | | | | | | | Duct burner outlet | | | | | | | | Change across DB |
|---|---|---|---|---|---|---|---|---|---|---|---|---|---|---|---|---|---|---|
| Day/hour | $H_2O$ (%) | QS (dscfm x $10^3$) | $O_2$ (% dry) | $CO_2$ (% dry) | CO (ppm dry) | $NO_x$ (ppm dry) | $NO_x$ (ppm iso) | $NO_x$ (lb/MBtu) | $NO_x$ (lb/hr) | $H_2O$ (%) | QS (dscfm x $10^3$) | $O_2$ (% dry) | $CO_2$ (% dry) | CO (ppm dry) | $NO_x$ (ppm dry) | $NO_x$ (lb/MBtu) | $NO_x$ (lb/hr) | $NO_x$ (lb/hr) |
| 16 23 | 6.2 | 137.3 | 17.1 | 2.02 | 81 | 17 | 27 | 0.094 | 17.1 | 9.2 | 134.9 | 14.0 | 3.66 | 49 | 22 | 0.065 | 21.2 | 4.1 |
| 17 2 | 6.4 | 111.6 | 16.8 | 2.21 | 40 | 22 | 31 | 0.108 | 17.3 | 9.4 | 109.3 | 13.8 | 3.83 | 28 | 27 | 0.077 | 21.0 | 3.7 |
| 17 3 | 6.4 | 69.7 | 16.8 | 2.21 | 42 | 21 | 31 | 0.108 | 10.7 | 9.4 | 67.3 | 13.8 | 3.84 | 29 | 25 | 0.071 | 11.8 | 1.1 |
| 17 4 | 6.4 | 110.6 | 16.9 | 2.20 | 45 | 21 | 30 | 0.105 | 16.3 | 9.4 | 107.7 | 13.8 | 3.83 | 30 | 25 | 0.074 | 19.6 | 3.3 |
| Avg | 6.3 | 107.1 | 16.9 | 2.16 | 52 | 20 | 30 | 0.104 | 15.4 | 9.3 | 104.8 | 13.8 | 3.79 | 34 | 25 | 0.072 | 18.4 | 3.0 |
| S.D. | 0.1 | 27.9 | 0.1 | 0.09 | 19 | 2 | 1.8 | 0.007 | 3.1 | 0.1 | 27.9 | 0.1 | 0.08 | 10 | 2 | 0.005 | 4.4 | 1.3 |

Note: Means and Standard Deviations are calculated using 15 minute averages.

# TABLE 12. DUCT BURNER TEST DATA: CEM TEST PERIODS, TEST CONDITION 2

| | Gas turbine operating parameters | | | Duct burner operating parameters | | | Ambient conditions | | |
|---|---|---|---|---|---|---|---|---|---|
| Day/hour | Load (MW) | Fuel flow (scfm) | Steam inj. ratio (lb/lb) | Fuel flow (scfm) | Heat input ($10^6$ Btu/hr) | Load (percent) | Temp (°F) | Pressure (in hg) | Relative humidity (%) |
| 16 21 | 34.7 | 7,326 | 0.93 | 1,476 | 91.8 | 56 | 55 | 30.1 | 92.0 |
| 18 17 | 35.3 | 7,514 | 1.00 | 1,464 | 91.1 | 56 | 51 | 30.3 | 61.5 |
| 18 18 | 35.3 | 7,532 | 1.00 | 1,397 | 86.9 | 53 | 51 | 30.3 | 69.0 |
| 18 19 | 35.1 | 7,561 | 0.98 | 1,505 | 93.7 | 57 | 52 | 30.3 | 78.0 |
| 18 20 | 35.1 | 7,490 | 0.97 | 1,503 | 93.5 | 57 | 51 | 30.3 | 79.8 |
| 18 21 | 34.9 | 7,337 | 0.98 | 1,521 | 94.6 | 58 | 52 | 30.3 | 85.0 |
| 19 7 | 35.4 | 7,711 | 0.99 | 1,340 | 83.3 | 51 | 50 | 30.3 | 82.5 |
| 19 20 | 34.6 | 8,054 | 0.95 | 1,324 | 82.4 | 51 | 55 | 30.3 | 92.0 |
| 19 21 | 34.8 | 6,767 | 0.99 | 1,265 | 78.7 | 48 | 54 | 30.3 | 92.0 |
| 20 7 | 36.4 | 7,669 | 1.00 | 1,108 | 68.9 | 42 | 43 | 30.3 | 89.0 |
| 21 13 | 33.9 | 7,226 | 0.94 | 1,305 | 81.2 | 50 | 58 | 30.3 | 51.3 |
| 21 14 | 33.6 | 7,254 | 0.93 | 1,340 | 83.4 | 51 | 59 | 30.3 | 50.0 |
| 21 15 | 33.4 | 7,166 | 0.94 | 1,324 | 82.4 | 51 | 60 | 30.2 | 56.8 |
| 21 16 | 33.4 | 7,160 | 0.94 | 1,318 | 82.0 | 50 | 61 | 30.2 | 69.5 |
| 21 17 | 33.8 | 7,283 | 0.96 | 1,333 | 82.9 | 51 | 57 | 30.2 | 77.0 |
| 21 18 | 34.1 | 7,270 | 0.99 | 1,322 | 82.2 | 50 | 53 | 30.2 | 86.0 |
| 21 19 | 34.1 | 7,304 | 0.94 | 1,278 | 79.5 | 49 | 57 | 30.3 | 86.0 |
| 21 21 | 34.4 | 7,343 | 0.95 | 1,367 | 85.0 | 52 | 55 | 30.2 | 93.0 |
| 21 22 | 34.5 | 6,466 | 0.97 | 1,528 | 95.1 | 58 | 55 | 30.2 | 93.0 |
| 23 22 | 34.7 | 6,331 | 0.94 | 1,427 | 88.8 | 54 | 53 | 30.3 | 73.0 |
| Avg. | 34.6 | 7,288 | 0.96 | 1,372 | 85.4 | 52 | 54 | 30.3 | 77.8 |
| S.D. | 0.8 | 400 | 0.02 | 106 | 6.6 | 4 | 4 | 0.1 | 14.1 |

| | Duct burner inlet | | | | | | | | | Duct burner outlet | | | | | | | | Change across DB |
|---|---|---|---|---|---|---|---|---|---|---|---|---|---|---|---|---|---|---|
| Day/hour | $H_2O$ (%) | QS (dscfm x $10^3$) | $O_2$ (% dry) | $CO_2$ (% dry) | CO (ppm dry) | $NO_x$ (ppm dry) | $NO_x$ (ppm iso) | $NO_x$ (lb/MBtu) | $NO_x$ (lb/hr) | $H_2O$ (%) | QS (dscfm x $10^3$) | $O_2$ (% dry) | $CO_2$ (% dry) | CO (ppm dry) | $NO_x$ (ppm dry) | $NO_x$ (lb/MBtu) | $NO_x$ (lb/hr) | $NO_x$ (lb/hr) |
| 16 21 | 9.5 | 193.0 | 14.8 | 3.38 | 0 | 40 | 38 | 0.134 | 55.5 | 11.3 | 191.5 | 13.0 | 4.34 | 18 | 44 | 0.114 | 60.5 | 5.0 |
| 18 17 | 9.6 | 200.5 | 14.8 | 3.36 | 3 | 41 | 39 | 0.137 | 58.7 | 11.3 | 199.0 | 13.1 | 4.24 | 17 | 56 | 0.146 | 82.8 | 24.1 |
| 18 18 | 9.6 | a | 14.7 | 3.49 | 3 | 42 | 40 | 0.138 | a | 11.2 | a | 13.1 | 4.20 | 16 | 52 | 0.138 | a | a |
| 18 19 | 9.6 | a | 14.7 | 3.50 | 3 | 41 | 39 | 0.137 | a | 11.3 | a | 13.0 | 4.28 | 17 | 51 | 0.133 | a | a |
| 18 20 | 9.6 | a | 14.7 | 3.50 | 2 | 42 | 40 | 0.139 | a | 11.3 | a | 13.0 | 4.28 | 16 | 49 | 0.128 | a | a |
| 18 21 | 9.6 | a | 14.7 | 3.50 | 3 | 42 | 40 | 0.138 | a | 11.3 | a | 13.0 | 4.29 | 16 | 49 | 0.129 | a | a |
| 19 7 | 10.0 | a | 14.5 | 3.51 | 11 | 39 | 36 | 0.124 | a | 11.5 | a | 13.0 | 4.18 | 27 | 46 | 0.116 | a | a |
| 19 20 | 9.5 | 202.0 | 14.8 | 3.53 | 2 | 39 | 38 | 0.133 | 56.7 | 11.0 | 200.7 | 13.3 | 4.22 | 10 | 47 | 0.126 | 66.4 | 10.2 |
| 19 21 | 9.5 | 201.0 | 14.8 | 3.55 | 2 | 39 | 38 | 0.134 | 56.9 | 11.0 | 199.7 | 13.3 | 4.23 | 10 | 47 | 0.128 | 67.3 | 10.5 |
| 20 7 | 9.4 | 205.0 | 14.8 | 3.60 | 2 | 38 | 38 | 0.130 | 56.3 | 10.8 | 203.8 | 13.5 | 4.17 | 11 | 44 | 0.122 | 64.3 | 8.1 |
| 21 3 | 9.3 | 204.1 | 14.9 | 3.58 | 6 | 41 | 39 | 0.140 | 60.1 | 10.9 | 202.8 | 13.3 | 4.22 | 10 | 39 | 0.106 | 57.2 | -3.0 |
| 21 14 | 9.3 | 202.9 | 14.9 | 3.62 | 6 | 41 | 39 | 0.140 | 60.0 | 11.0 | 201.5 | 13.2 | 4.23 | 11 | 39 | 0.104 | 56.4 | -3.6 |
| 21 15 | 9.4 | 202.6 | 14.8 | 3.63 | 6 | 41 | 39 | 0.140 | 60.0 | 11.1 | 201.3 | 13.1 | 4.21 | 12 | 41 | 0.108 | 58.9 | -1.1 |
| 21 16 | 9.5 | 198.3 | 14.8 | 3.63 | 6 | 41 | 39 | 0.139 | 58.3 | 11.2 | 197.0 | 13.2 | 4.15 | 12 | 41 | 0.108 | 57.6 | -0.8 |
| 21 17 | 9.6 | 198.4 | 14.8 | 3.63 | 6 | 40 | 39 | 0.135 | 57.1 | 11.3 | 197.1 | 13.2 | 4.18 | 12 | 39 | 0.104 | 55.6 | -1.5 |
| 21 18 | 9.7 | 202.3 | 14.8 | 3.62 | 6 | 39 | 39 | 0.131 | 56.7 | 11.4 | 200.9 | 13.1 | 4.20 | 13 | 38 | 0.101 | 55.2 | -1.5 |
| 21 19 | 9.6 | 202.4 | 14.8 | 3.63 | 6 | 40 | 38 | 0.133 | 57.3 | 11.2 | 201.1 | 13.2 | 4.22 | 12 | 37 | 0.099 | 53.6 | -3.6 |
| 21 21 | 9.6 | 203.1 | 14.8 | 3.62 | 5 | 39 | 38 | 0.132 | 56.8 | 11.1 | 201.8 | 13.2 | 4.30 | 9 | 40 | 0.106 | 57.2 | 0.4 |
| 21 22 | 9.6 | 204.7 | 14.8 | 3.66 | 5 | 39 | 38 | 0.131 | 57.0 | 10.9 | 203.2 | 13.3 | 4.27 | 9 | 37 | 0.099 | 53.4 | -3.5 |
| 23 22 | 9.4 | 200.0 | 14.9 | 3.68 | 4 | 43 | 42 | 0.146 | 61.1 | 10.6 | 198.5 | 13.5 | 4.20 | 14 | 39 | 0.106 | 54.8 | -6.3 |
| Avg | 9.5 | 201.3 | 14.8 | 3.56 | 4 | 40 | 39 | 0.136 | 57.9 | 11.1 | 200.0 | 13.2 | 4.23 | 14 | 44 | 0.116 | 60.1 | 2.2 |
| S.D. | 0.2 | 3.0 | 0.1 | 0.09 | 2 | 1 | 1.2 | 0.005 | 1.7 | 0.2 | 3.1 | 0.2 | 0.05 | 4 | 6 | 0.015 | 7.6 | 8.0 |

[a]Represents missing data.

Note: Means and Standard Deviations are calculated using 15 minute averages.

TABLE 13. DUCT BURNER TEST DATA: CEM TEST PERIODS, TEST CONDITION 3

| | Gas turbine operating parameters | | | Duct burner operating parameters | | | Ambient conditions | | |
|---|---|---|---|---|---|---|---|---|---|
| Day/hour | Load (MW) | Fuel flow (scfm) | Steam inj. ratio (lb/lb) | Fuel flow (scfm) | Heat input ($10^6$ Btu/hr) | Load (percent) | Temp (°F) | Pressure (in hg) | Relative humidity (%) |
| 16 7 | 34.8 | 7,530 | 0.94 | 959 | 59.7 | 37 | 52 | 30.2 | 90.3 |
| 16 8 | 34.9 | 7,484 | 0.95 | 996 | 62.0 | 38 | 52 | 30.2 | 83.3 |
| 17 7 | 34.8 | 7,600 | 0.96 | 1,090 | 67.8 | 42 | 53 | 30.1 | 86.0 |
| 18 7 | 36.5 | 7,824 | 0.99 | 988 | 61.4 | 38 | 43 | 30.2 | 100.0 |
| 20 21 | 34.9 | 7,408 | 0.99 | 982 | 61.1 | 37 | 51 | 30.3 | 73.0 |
| 21 7 | 34.7 | 7,448 | 0.96 | 1,029 | 64.0 | 39 | 53 | 30.3 | 58.3 |
| 21 8 | 34.7 | 7,443 | 0.96 | 1,167 | 72.6 | 45 | 52 | 30.3 | 59.3 |
| Avg | 35.0 | 7,534 | 0.97 | 1,030 | 64.1 | 39 | 51 | 30.2 | 78.6 |
| S.D. | 0.6 | 143 | 0.02 | 74 | 4.6 | 3 | 4 | 0.1 | 15.7 |

| | Duct burner inlet | | | | | | | | | Duct burner outlet | | | | | | | | Change across DB |
|---|---|---|---|---|---|---|---|---|---|---|---|---|---|---|---|---|---|---|
| Day/hour | $H_2O$ (%) | QS (dscfm x $10^3$) | $O_2$ (% dry) | $CO_2$ (% dry) | CO (ppm dry) | $NO_x$ (ppm dry) | $NO_x$ (ppm iso) | $NO_x$ (lb/MBtu) | $NO_x$ (lb/hr) | $H_2O$ (%) | QS (dscfm x $10^3$) | $O_2$ (% dry) | $CO_2$ (% dry) | CO (ppm dry) | $NO_x$ (ppm dry) | $NO_x$ (lb/MBtu) | $NO_x$ (lb/hr) | $NO_x$ (lb/hr) |
| 16 7 | 9.8 | 245.6 | 14.6 | 3.60 | 2 | 40 | 38 | 0.131 | 70.9 | 10.9 | 244.6 | 13.5 | 4.11 | 22 | 45 | 0.125 | 78.8 | 7.9 |
| 16 8 | 9.8 | 228.7 | 14.6 | 3.59 | 2 | 39 | 37 | 0.127 | 64.2 | 10.8 | 227.7 | 13.5 | 4.10 | 22 | 42 | 0.118 | 69.3 | 5.1 |
| 17 7 | 9.5 | 187.7 | 14.8 | 3.44 | 1 | 40 | 38 | 0.133 | 53.3 | 11.1 | 186.6 | 13.3 | 4.17 | 15 | 42 | 0.112 | 55.6 | 2.3 |
| 18 7 | 9.3 | 209.3 | 14.9 | 3.61 | 5 | 33 | 33 | 0.113 | 49.3 | 10.5 | 208.3 | 13.7 | 4.02 | 17 | 32 | 0.092 | 47.6 | -1.7 |
| 20 21 | 9.8 | 203.0 | 14.7 | 3.58 | 1 | 39 | 38 | 0.130 | 57.1 | 10.9 | 202.0 | 13.5 | 4.11 | 11 | 36 | 0.101 | 52.3 | -4.8 |
| 21 7 | 9.7 | 204.7 | 14.5 | 3.60 | 10 | 40 | 37 | 0.130 | 59.1 | 10.8 | 203.7 | 13.4 | 4.11 | 21 | 37 | 0.102 | 54.2 | -4.9 |
| 21 8 | 9.6 | 206.1 | 14.6 | 3.62 | 10 | 39 | 36 | 0.129 | 57.9 | 10.8 | 204.9 | 13.4 | 4.17 | 21 | 37 | 0.101 | 54.1 | -3.8 |
| Avg | 9.6 | 212.2 | 14.7 | 3.58 | 4 | 39 | 37 | 0.128 | 58.8 | 10.8 | 211.1 | 13.5 | 4.11 | 18 | 39 | 0.107 | 58.8 | 0.0 |
| S.D. | 0.2 | 19.0 | 0.1 | 0.06 | 4 | 3 | 1.8 | 0.007 | 7.1 | 0.2 | 19.1 | 0.1 | 0.05 | 4 | 4 | 0.012 | 10.9 | 5.2 |

Note: Means and Standard Deviations are calculated using 15 minute averages.

TABLE 14. DUCT BURNER TEST DATA: CEM TEST PERIODS, TEST CONDITION 9

| | Gas turbine operating parameters | | | Duct burner operating parameters | | | Ambient conditions | | |
|---|---|---|---|---|---|---|---|---|---|
| Day/hour | Load (MW) | Fuel flow (scfm) | Steam inj. ratio (lb/lb) | Fuel flow (scfm) | Heat input ($10^6$ Btu/hr) | Load (percent) | Temp (°F) | Pressure (in hg) | Relative humidity (%) |
| 16 0 | 12.8 | 3,675 | 0.93 | 1,915 | 119.2 | 73 | 50 | 30.2 | 85.0 |
| 16 1 | 12.8 | 3,607 | 0.93 | 1,813 | 112.8 | 69 | 50 | 30.2 | 85.0 |
| 16 2 | 12.8 | 3,667 | 0.93 | 1,783 | 110.9 | 68 | 50 | 30.2 | 85.0 |
| 16 3 | 12.8 | 3,564 | 0.94 | 1,806 | 112.4 | 69 | 49 | 30.2 | 85.0 |
| 16 4 | 12.8 | 3,545 | 0.94 | 1,809 | 112.5 | 69 | 50 | 30.2 | 85.0 |
| 16 5 | 12.9 | 4,759 | 0.93 | 1,738 | 108.1 | 66 | 49 | 30.2 | 85.0 |
| Avg | 12.8 | 3,803 | 0.93 | 1,811 | 112.7 | 69 | 50 | 30.2 | 85.0 |
| S.D. | 0.1 | 471 | 0.0 | 58 | 3.6 | 2 | 1 | 0 | 0 |

| | Duct burner inlet | | | | | | | | | Duct burner outlet | | | | | | | | Change across DB |
|---|---|---|---|---|---|---|---|---|---|---|---|---|---|---|---|---|---|---|
| Day/hour | $H_2O$ (%) | QS (dscfm x $10^3$) | $O_2$ (% dry) | $CO_2$ (% dry) | CO (ppm dry) | $NO_x$ (ppm dry) | $NO_x$ (ppm iso) | $NO_x$ (lb/MBtu) | $NO_x$ (lb/hr) | $H_2O$ (%) | QS (dscfm x $10^3$) | $O_2$ (% dry) | $CO_2$ (% dry) | CO (ppm dry) | $NO_x$ (ppm dry) | $NO_x$ (lb/MBtu) | $NO_x$ (lb/hr) | $NO_x$ (lb/hr) |
| 16 0 | 6.8 | 170.4 | 16.8 | 2.17 | 14 | 35 | 52 | 0.177 | 42.9 | 9.0 | 168.5 | 14.5 | 3.42 | 24 | 46 | 0.148 | 55.6 | 12.6 |
| 16 1 | 6.8 | 201.8 | 16.8 | 2.19 | 14 | 35 | 51 | 0.177 | 50.8 | 9.0 | 200.0 | 14.6 | 3.38 | 24 | 45 | 0.147 | 64.7 | 13.9 |
| 16 2 | 6.8 | 170.5 | 16.8 | 2.21 | 13 | 36 | 52 | 0.179 | 43.8 | 8.9 | 168.7 | 14.6 | 3.34 | 24 | 46 | 0.150 | 55.4 | 11.6 |
| 16 3 | 6.7 | 186.6 | 16.9 | 2.19 | 14 | 35 | 52 | 0.178 | 46.7 | 9.0 | 184.8 | 14.6 | 3.37 | 24 | 45 | 0.146 | 59.7 | 13.0 |
| 16 4 | 6.7 | 205.8 | 16.9 | 2.20 | 14 | 35 | 52 | 0.180 | 52.1 | 9.0 | 204.0 | 14.5 | 3.39 | 24 | 44 | 0.144 | 65.0 | 12.9 |
| 16 5 | 6.7 | 210.9 | 16.9 | 2.21 | 14 | 35 | 52 | 0.179 | 53.2 | 9.2 | 209.2 | 14.6 | 3.37 | 24 | 45 | 0.145 | 67.3 | 14.1 |
| Avg | 6.8 | 191.0 | 16.8 | 2.19 | 14 | 35 | 52 | 0.178 | 48.3 | 9.0 | 189.2 | 14.6 | 3.37 | 24 | 45 | 0.147 | 61.3 | 13.0 |
| S.D. | 0.0 | 17.9 | 0.0 | 0.01 | 0 | 0 | 0.4 | 0.001 | 4.4 | 0.1 | 17.9 | 0.0 | 0.03 | 0 | 1 | 0.002 | 5.1 | 0.9 |

Note: Means and Standard Deviations are calculated using 15 minute averages.

TABLE 15. DUCT BURNER TEST DATA: CEM TEST PERIODS, TEST CONDITION 10

| | Gas turbine operating parameters | | | Duct burner operating parameters | | | Ambient conditions | | |
|---|---|---|---|---|---|---|---|---|---|
| Day/hour | Load (MW) | Fuel flow (scfm) | Steam inj. ratio (lb/lb) | Fuel flow (scfm) | Heat input ($10^6$ Btu/hr) | Load (percent) | Temp (°F) | Pressure (in hg) | Relative humidity (%) |
| 17 23 | 12.6 | 3,591 | 0.77 | 897 | 55.8 | 34 | 50 | 30.2 | 66.0 |
| Avg | NA | NA | NA | NA | NA | NA | NA | NA | NA |
| S.D | - | - | - | - | - | - | - | - | - |

| | Duct burner inlet | | | | | | | | | Duct burner outlet | | | | | | | | Change across DB |
|---|---|---|---|---|---|---|---|---|---|---|---|---|---|---|---|---|---|---|
| Day/hour | $H_2O$ (%) | QS (dscfm x $10^3$) | $O_2$ (% dry) | $CO_2$ (% dry) | CO (ppm dry) | $NO_x$ (ppm dry) | $NO_x$ (ppm iso) | $NO_x$ (lb/MBtu) | $NO_x$ (lb/hr) | $H_2O$ (%) | QS (dscfm x $10^3$) | $O_2$ (% dry) | $CO_2$ (% dry) | CO (ppm dry) | $NO_x$ (ppm dry) | $NO_x$ (lb/MBtu) | $NO_x$ (lb/hr) | $NO_x$ (lb/hr) |
| 17 23 | 5.6 | 174.9 | 17.3 | 2.17 | 86 | 15 | 24 | 0.085 | 18.9 | 7.3 | 174.0 | 15.7 | 2.58 | 81 | 10 | 0.041 | 13.1 | -5.8 |
| Avg | NA | NA | NA | NA | NA | NA | | NA | NA | NA | NA | NA | NA | NA | NA | NA | NA | NA |
| S.D. | - | - | - | - | - | - | | - | - | - | - | - | - | - | - | - | - | - |

NA - Not applicable.

Note: Means and Standard Deviations are calculated using 15 minute averages.

TABLE 16. DUCT BURNER TEST DATA: CEM TEST PERIODS, TEST CONDITION 11

| | Gas turbine operating parameters | | | Duct burner operating parameters | | | Ambient conditions | | |
|---|---|---|---|---|---|---|---|---|---|
| Day/hour | Load (MW) | Fuel flow (scfm) | Steam inj. ratio (lb/lb) | Fuel flow (scfm) | Heat input ($10^6$ Btu/hr) | Load (percent) | Temp (°F) | Pressure (in hg) | Relative humidity (%) |
| 17 19 | 28.5 | 6,442 | 0.77 | 977 | 60.8 | 37 | 53 | 30.2 | 51.0 |
| 17 21 | 28.6 | 6,296 | 0.66 | 782 | 48.7 | 30 | 51 | 30.2 | 66.0 |
| Avg | 28.5 | 6,370 | 0.72 | 879 | 54.7 | 34 | 52 | 30.2 | 58.5 |
| S.D. | 0.1 | 102 | 0.08 | 138 | 8.6 | 5 | 1 | 0 | 10.6 |

| | Duct burner inlet | | | | | | | | | Duct burner outlet | | | | | | | | Change across DB |
|---|---|---|---|---|---|---|---|---|---|---|---|---|---|---|---|---|---|---|
| Day/hour | $H_2O$ (%) | QS (dscfm x $10^3$) | $O_2$ (% dry) | $CO_2$ (% dry) | CO (ppm dry) | $NO_x$ (ppm dry) | $NO_x$ (ppm iso) | $NO_x$ (lb/MBtu) | $NO_x$ (lb/hr) | $H_2O$ (%) | QS (dscfm x $10^3$) | $O_2$ (% dry) | $CO_2$ (% dry) | CO (ppm dry) | $NO_x$ (ppm dry) | $NO_x$ (lb/MBtu) | $NO_x$ (lb/hr) | $NO_x$ (lb/hr) |
| 17 19 | 7.3 | 209.3 | 15.9 | 2.96 | 6 | 34 | 38 | 0.138 | 50.4 | 8.8 | 208.3 | 14.5 | 3.40 | 15 | 35 | 0.113 | 52.2 | 1.8 |
| 17 21 | 7.1 | 208.4 | 15.9 | 2.94 | 7 | 36 | 41 | 0.148 | 53.2 | 8.4 | 207.6 | 14.8 | 3.27 | 16 | 25 | 0.083 | 37.0 | -16.2 |
| Avg | 7.2 | 208.9 | 15.9 | 2.95 | 7 | 35 | 40 | 0.143 | 51.8 | 8.6 | 208.0 | 14.7 | 3.34 | 16 | 30 | 0.098 | 44.6 | -7.2 |
| S.D. | 0.2 | 0.6 | 0.0 | 0.01 | 1 | 1 | 2.3 | 0.007 | 2.0 | 0.3 | 0.5 | 0.2 | 0.09 | 1 | 7 | 0.021 | 10.7 | 12.70 |

Note: Means and Standard Deviations are calculated using 15 minute averages.

TABLE 17. DUCT BURNER TEST DATA: CEM TEST PERIODS, TEST CONDITION 12

| | Gas turbine operating parameters | | | Duct burner operating parameters | | | Ambient conditions | | |
|---|---|---|---|---|---|---|---|---|---|
| Day/hour | Load (MW) | Fuel flow (scfm) | Steam inj. ratio (lb/lb) | Fuel flow (scfm) | Heat input ($10^6$ Btu/hr) | Load (percent) | Temp (°F) | Pressure (in hg) | Relative humidity (%) |
| 18 4 | 11.6 | 3,784 | 0.78 | 2,132 | 132.7 | 81 | 40 | 30.2 | 66.0 |
| 19 0 | 13.0 | 3,663 | 0.76 | 2,371 | 147.5 | 90 | 52 | 30.3 | 85.0 |
| 19 1 | 13.7 | 3,782 | 0.72 | 2,322 | 144.5 | 89 | 51 | 30.3 | 85.0 |
| 19 2 | 14.5 | 3,736 | 0.70 | 2,363 | 147.0 | 90 | 50 | 30.3 | 85.0 |
| 19 3 | 13.7 | 3,796 | 0.72 | 2,416 | 150.3 | 92 | 52 | 30.3 | 85.0 |
| 19 4 | 13.7 | 3,960 | 0.73 | 2,341 | 145.7 | 89 | 50 | 30.3 | 85.0 |
| 19 5 | 14.0 | 4,532 | 0.72 | 2,182 | 135.7 | 83 | 51 | 30.3 | 85.0 |
| 19 23 | 12.4 | 3,395 | 0.79 | 2,063 | 128.4 | 79 | 49 | 30.3 | 92.0 |
| 20 0 | 12.6 | 3,610 | 0.77 | 2,086 | 129.8 | 80 | 49 | 30.3 | 92.0 |
| 20 1 | 12.7 | 3,558 | 0.78 | 2,040 | 126.9 | 78 | 49 | 30.3 | 92.0 |
| 20 3 | 11.7 | 3,696 | 0.78 | 2,081 | 129.5 | 79 | 47 | 30.3 | 92.0 |
| 20 4 | 12.4 | 3,400 | 0.76 | 2,085 | 129.7 | 80 | 47 | 30.3 | 92.0 |
| 20 5 | 12.5 | 4,475 | 0.77 | 1,821 | 113.3 | 70 | 47 | 30.3 | 92.0 |
| 22 0 | 12.2 | 3,509 | 0.79 | 2,110 | 131.3 | 81 | 55 | 30.2 | 93.0 |
| 22 1 | 12.2 | 3,536 | 0.79 | 2,113 | 131.5 | 81 | 54 | 30.2 | 93.0 |
| 22 2 | 12.7 | 3,591 | 0.77 | 2,117 | 131.7 | 81 | 54 | 30.2 | 93.0 |
| 22 11 | 13.0 | 3,613 | 0.77 | 2,070 | 128.8 | 79 | 51 | 30.2 | 65.8 |
| 22 12 | 13.1 | 3,610 | 0.76 | 2,071 | 128.8 | 79 | 54 | 30.2 | 50.3 |
| 22 17 | 12.3 | 3,552 | 0.78 | 2,096 | 130.4 | 80 | 59 | 30.3 | 76.5 |
| 22 18 | 12.3 | 3,515 | 0.79 | 2,103 | 130.9 | 80 | 60 | 30.3 | 82.5 |
| 22 19 | 12.4 | 3,502 | 0.79 | 2,096 | 130.4 | 80 | 59 | 30.3 | 86.8 |
| 22 20 | 12.5 | 3,580 | 0.77 | 2,144 | 133.4 | 82 | 58 | 30.2 | 87.4 |
| 22 21 | 12.5 | 3,537 | 0.76 | 2,111 | 131.4 | 81 | 57 | 30.2 | 93.0 |
| 22 22 | 12.5 | 3,540 | 0.76 | 2,055 | 127.9 | 78 | 56 | 30.2 | 93.0 |
| 22 23 | 12.7 | 3,576 | 0.76 | 2,068 | 128.7 | 79 | 57 | 30.2 | 93.0 |
| 23 0 | 12.5 | 3,565 | 0.75 | 2,105 | 130.9 | 80 | 56 | 30.2 | 93.0 |
| 24 0 | 12.6 | 3,539 | 0.76 | 2,142 | 133.3 | 82 | 50 | 30.3 | 73.0 |
| 24 1 | 12.7 | 3,670 | 0.78 | 2,207 | 137.3 | 84 | 50 | 30.3 | 73.0 |
| 24 2 | 13.6 | 3,886 | 0.74 | 2,256 | 140.3 | 86 | 49 | 30.3 | 73.0 |
| 24 3 | 14.1 | 3,818 | 0.72 | 2,233 | 138.9 | 85 | 50 | 30.3 | 73.0 |
| 24 4 | 14.0 | 3,742 | 0.73 | 2,211 | 137.6 | 84 | 48 | 30.3 | 73.0 |
| Avg | 12.9 | 3,686 | 0.76 | 2,149 | 133.7 | 82 | 52 | 30.3 | 83.7 |
| S.D. | 0.7 | 255 | 0.03 | 121 | 7.6 | 5 | 4 | 0.1 | 10.7 |

(continued)

TABLE 17 (continued)

| Day/hour | Duct burner inlet | | | | | | | | | Duct burner outlet | | | | | | | | Change across DB |
|---|---|---|---|---|---|---|---|---|---|---|---|---|---|---|---|---|---|---|
| | $H_2O$ (%) | QS (dscfm x $10^3$) | $O_2$ (% dry) | $CO_2$ (% dry) | CO (ppm dry) | $NO_x$ (ppm dry) | $NO_x$ (ppm iso) | $NO_x$ (lb/MBtu) | $NO_x$ (lb/hr) | $H_2O$ (%) | QS (dscfm x $10^3$) | $O_2$ (% dry) | $CO_2$ (% dry) | CO (ppm dry) | $NO_x$ (ppm dry) | $NO_x$ (lb/MBtu) | $NO_x$ (lb/hr) | $NO_x$ (lb/hr) |
| 18 4 | 5.4 | 168.0 | 17.5 | 2.08 | 58 | 23 | 39 | 0.137 | 27.5 | 8.3 | 165.9 | 14.7 | 3.41 | 38 | 26 | 0.086 | 30.9 | 3.4 |
| 19 0 | 6.2 | a | 17.0 | 2.16 | 73 | 19 | 29 | 0.102 | a | 9.1 | a | 14.0 | 3.67 | 41 | 27 | 0.080 | a | a |
| 19 1 | 6.3 | a | 16.9 | 2.24 | 57 | 21 | 31 | 0.108 | a | 9.1 | a | 14.0 | 3.67 | 35 | 29 | 0.086 | a | a |
| 19 2 | 6.2 | a | 16.9 | 2.24 | 57 | 21 | 31 | 0.107 | a | 9.1 | a | 13.9 | 3.73 | 34 | 29 | 0.086 | a | a |
| 19 3 | 6.3 | a | 16.9 | 2.23 | 58 | 21 | 31 | 0.108 | a | 9.2 | a | 13.9 | 3.73 | 34 | 27 | 0.079 | a | a |
| 19 4 | 6.3 | a | 16.8 | 2.24 | 60 | 21 | 30 | 0.104 | a | 9.3 | a | 13.8 | 3.72 | 38 | 28 | 0.081 | a | a |
| 19 5 | 6.4 | a | 16.8 | 2.24 | 60 | 20 | 30 | 0.103 | a | 9.6 | a | 13.7 | 3.70 | 44 | 29 | 0.081 | a | a |
| 19 23 | 6.0 | 167.4 | 17.2 | 2.14 | 83 | 17 | 28 | 0.098 | 21.0 | 8.7 | 165.4 | 14.5 | 3.47 | 50 | 21 | 0.068 | 25.2 | 4.2 |
| 20 0 | 6.0 | 163.5 | 17.2 | 2.16 | 83 | 18 | 28 | 0.097 | 20.6 | 8.8 | 161.4 | 14.4 | 3.49 | 50 | 20 | 0.065 | 23.6 | 3.0 |
| 20 1 | 6.0 | 162.5 | 17.2 | 2.16 | 88 | 17 | 28 | 0.095 | 20.0 | 8.7 | 160.4 | 14.5 | 3.47 | 54 | 19 | 0.061 | 21.9 | 1.8 |
| 20 3 | 6.0 | 168.1 | 17.2 | 2.17 | 20 | 35 | 57 | 0.195 | 42.1 | 8.8 | 166.0 | 14.5 | 3.48 | 13 | 50 | 0.161 | 59.9 | 17.8 |
| 20 4 | 5.9 | 169.2 | 17.2 | 2.15 | 88 | 18 | 29 | 0.098 | 21.3 | 8.7 | 167.1 | 14.5 | 3.46 | 53 | 20 | 0.064 | 24.0 | 2.7 |
| 20 5 | 5.9 | 168.4 | 17.2 | 2.15 | 92 | 16 | 27 | 0.092 | 19.7 | 8.9 | 166.6 | 14.5 | 3.45 | 57 | 18 | 0.057 | 21.2 | 1.4 |
| 22 0 | 6.2 | 169.4 | 17.1 | 2.22 | 61 | 17 | 26 | 0.090 | 20.1 | 9.0 | 167.3 | 14.4 | 3.51 | 46 | 15 | 0.047 | 17.8 | -2.4 |
| 22 1 | 6.3 | 170.8 | 17.1 | 2.23 | 58 | 17 | 27 | 0.094 | 21.3 | 9.0 | 168.7 | 14.4 | 3.53 | 44 | 16 | 0.050 | 19.2 | -2.1 |
| 22 2 | 6.3 | 171.6 | 17.1 | 2.24 | 62 | 16 | 25 | 0.087 | 19.9 | 8.8 | 169.5 | 14.4 | 3.52 | 47 | 14 | 0.044 | 17.1 | -2.8 |
| 22 11 | 7.0 | 168.6 | 16.5 | 2.21 | 89 | 16 | 22 | 0.076 | 19.7 | 8.8 | 166.5 | 14.4 | 3.53 | 51 | 13 | 0.042 | 15.8 | -3.9 |
| 22 12 | 7.0 | 168.4 | 16.4 | 2.22 | 86 | 17 | 22 | 0.077 | 21.3 | 9.0 | 166.4 | 14.3 | 3.54 | 50 | 14 | 0.043 | 16.5 | -3.6 |
| 22 17 | 7.1 | 173.7 | 16.5 | 2.19 | 92 | 17 | 23 | 0.080 | 20.3 | 9.0 | 171.6 | 14.3 | 3.52 | 53 | 14 | 0.044 | 17.4 | -4.0 |
| 22 18 | 7.1 | 169.8 | 16.5 | 2.17 | b | 17 | 23 | 0.078 | 20.3 | 9.0 | 167.7 | 14.3 | 3.52 | 57 | 13 | 0.042 | 16.1 | -4.1 |
| 22 19 | 7.1 | 170.1 | 16.5 | 2.18 | b | 16 | 22 | 0.077 | 20.1 | 9.0 | 168.0 | 14.4 | 3.53 | 57 | 13 | 0.042 | 16.0 | -4.0 |
| 22 20 | 7.1 | 170.1 | 16.5 | 2.19 | 95 | 17 | 23 | 0.076 | 20.2 | 8.9 | 167.9 | 14.4 | 3.52 | 55 | 13 | 0.042 | 16.1 | -4.1 |
| 22 21 | 7.1 | 170.4 | 16.6 | 2.17 | b | 16 | 22 | 0.077 | 19.8 | 8.9 | 168.3 | 14.4 | 3.51 | 57 | 13 | 0.041 | 15.7 | -4.0 |
| 22 22 | 7.1 | 170.3 | 16.5 | 2.20 | 95 | 16 | 22 | 0.076 | 19.7 | 8.9 | 168.3 | 14.4 | 3.52 | 55 | 13 | 0.041 | 15.7 | -4.0 |
| 22 23 | 7.1 | 171.1 | 16.5 | 2.21 | 89 | 17 | 23 | 0.078 | 20.3 | 8.9 | 169.0 | 14.4 | 3.54 | 51 | 14 | 0.043 | 16.4 | -3.9 |
| 23 0 | 7.1 | 172.2 | 16.6 | 2.20 | 94 | 16 | 23 | 0.077 | 20.1 | 8.9 | 170.1 | 14.4 | 3.55 | 53 | 13 | 0.042 | 16.2 | -3.9 |
| 24 0 | 5.5 | 193.2 | 17.6 | 1.98 | 66 | 19 | 34 | 0.115 | 25.6 | 8.2 | 191.0 | 15.0 | 3.12 | 47 | 16 | 0.055 | 21.8 | -3.8 |
| 24 1 | 5.6 | 192.4 | 17.6 | 1.98 | 68 | 19 | 34 | 0.118 | 26.2 | 8.2 | 190.2 | 15.0 | 3.12 | 48 | 16 | 0.054 | 21.1 | -5.1 |
| 24 2 | 5.8 | 194.1 | 17.3 | 2.14 | 46 | 23 | 38 | 0.130 | 31.6 | 8.5 | 191.8 | 14.7 | 3.34 | 32 | 22 | 0.071 | 29.5 | -2.1 |
| 24 3 | 5.7 | 195.4 | 17.4 | 2.10 | 49 | 21 | 36 | 0.125 | 29.8 | 8.4 | 193.1 | 14.7 | 3.29 | 34 | 20 | 0.067 | 27.9 | -1.9 |
| 24 4 | 5.7 | 195.1 | 17.4 | 2.09 | 53 | 21 | 36 | 0.123 | 29.3 | 8.4 | 192.8 | 14.8 | 3.26 | 37 | 19 | 0.064 | 26.5 | -2.8 |
| Avg | 6.3 | 171.1 | 17.0 | 2.17 | 74 | 19 | 29 | 0.100 | 23.1 | 8.8 | 172.0 | 14.4 | 3.50 | 46 | 20 | 0.062 | 22.0 | -1.1 |
| S.D. | 0.6 | 10.4 | 0.4 | 0.07 | 20 | 4 | 7.3 | 0.026 | 5.4 | 0.3 | 10.4 | 0.3 | 0.15 | 10 | 8 | 0.024 | 9.2 | 4.9 |

[a]Represents missing data.

[b]CO concentration 100 ppm.

Note: Means and Standard Deviations are calculated using 15 minute averages.

## TABLE 18. DUCT BURNER TEST DATA: CEM TEST PERIODS, TEST CONDITION 13

| | Gas turbine operating parameters | | | Duct burner operating parameters | | | Ambient conditions | | |
|---|---|---|---|---|---|---|---|---|---|
| Day/hour | Load (MW) | Fuel flow (scfm) | Steam inj. ratio (lb/lb) | Fuel flow (scfm) | Heat input ($10^6$ Btu/hr) | Load (percent) | Temp (°F) | Pressure (in hg) | Relative humidity (%) |
| 20 2 | 11.9 | 3,536 | 0.79 | 2,010 | 125.1 | 77 | 49 | 30.3 | 92.0 |
| 21 0 | 12.7 | 3,523 | 0.77 | 1,804 | 112.3 | 69 | 53 | 30.3 | 73.0 |
| 21 1 | 12.7 | 3,646 | 0.77 | 1,804 | 112.3 | 69 | 53 | 30.3 | 73.0 |
| 21 2 | 12.8 | 3,551 | 0.75 | 1,804 | 112.3 | 69 | 51 | 30.3 | 73.0 |
| 21 3 | 12.6 | 3,572 | 0.76 | 1,834 | 114.1 | 70 | 52 | 30.3 | 73.0 |
| 21 4 | 12.6 | 3,580 | 0.77 | 1,850 | 115.1 | 71 | 51 | 30.3 | 73.0 |
| 21 5 | 12.7 | 4,405 | 0.77 | 1,606 | 99.9 | 61 | 51 | 30.3 | 73.0 |
| 22 3 | 12.6 | 3,462 | 0.77 | 1,985 | 123.5 | 76 | 54 | 30.2 | 93.0 |
| 22 10 | 13.0 | 3,553 | 0.76 | 1,934 | 120.3 | 74 | 50 | 30.2 | 69.5 |
| 22 13 | 13.0 | 3,572 | 0.77 | 2,015 | 125.4 | 77 | 59 | 30.2 | 69.5 |
| 22 14 | 13.0 | 3,623 | 0.77 | 2,013 | 125.3 | 77 | 62 | 30.2 | 56.3 |
| 22 15 | 12.9 | 3,618 | 0.76 | 1,998 | 124.3 | 76 | 63 | 30.2 | 62.5 |
| 22 16 | 12.7 | 3,536 | 0.77 | 2,024 | 125.9 | 77 | 62 | 30.2 | 71.3 |
| 23 2 | 13.5 | 3,556 | 0.54 | 1,894 | 117.8 | 72 | 54 | 30.2 | 93.0 |
| 23 2 | 12.2 | 3,591 | 0.07 | 1,905 | 118.5 | 73 | 52 | 30.2 | 93.0 |
| 23 5 | 12.6 | 4,394 | 0.75 | 1,739 | 108.2 | 66 | 51 | 30.2 | 94.8 |
| 24 5 | 13.6 | 5,034 | 0.74 | 1,918 | 119.4 | 73 | 47 | 30.3 | 77.8 |
| Avg | 12.8 | 3,750 | 0.71 | 1,891 | 117.6 | 72 | 54 | 30.2 | 77.1 |
| S.D. | 0.4 | 433 | 0.17 | 117 | 7.2 | 4 | 5 | 0.1 | 11.7 |

| | Duct burner inlet | | | | | | | | | Duct burner outlet | | | | | | | | Change across DB |
|---|---|---|---|---|---|---|---|---|---|---|---|---|---|---|---|---|---|---|
| Day/hour | $H_2O$ (%) | QS (dscfm x $10^3$) | $O_2$ (% dry) | $CO_2$ (% dry) | CO (ppm dry) | $NO_x$ (ppm dry) | $NO_x$ (ppm iso) | $NO_x$ (lb/MBtu) | $NO_x$ (lb/hr) | $H_2O$ (%) | QS (dscfm x $10^3$) | $O_2$ (% dry) | $CO_2$ (% dry) | CO (ppm dry) | $NO_x$ (ppm dry) | $NO_x$ (lb/MBtu) | $NO_x$ (lb/hr) | $NO_x$ (lb/hr) |
| 20 2 | 5.9 | 167.6 | 17.3 | 2.11 | 89 | 19 | 31 | 0.108 | 22.8 | 8.6 | 165.6 | 14.6 | 3.37 | 58 | 21 | 0.069 | 25.0 | 2.1 |
| 21 0 | 6.3 | 166.6 | 17.0 | 2.19 | 78 | 16 | 27 | 0.092 | 21.0 | 8.6 | 164.8 | 14.6 | 3.33 | 56 | 13 | 0.043 | 15.6 | -5.4 |
| 21 1 | 6.3 | 176.5 | 17.0 | 2.20 | 77 | 17 | 26 | 0.091 | 22.1 | 8.7 | 174.6 | 14.6 | 3.35 | 55 | 13 | 0.042 | 16.3 | -5.8 |
| 21 2 | 6.3 | 174.3 | 17.0 | 2.20 | 76 | 17 | 26 | 0.091 | 21.7 | 8.6 | 172.5 | 14.6 | 3.34 | 54 | 13 | 0.043 | 16.4 | -5.3 |
| 21 3 | 6.6 | 170.3 | 16.8 | 2.19 | 84 | 17 | 25 | 0.085 | 20.8 | 8.6 | 168.4 | 14.6 | 3.34 | 56 | 13 | 0.042 | 15.5 | -5.3 |
| 21 4 | 6.6 | 172.1 | 16.8 | 2.19 | 86 | 17 | 25 | 0.085 | 21.0 | 8.8 | 170.2 | 14.4 | 3.34 | 64 | 13 | 0.041 | 15.8 | -5.3 |
| 21 5 | 6.5 | 173.1 | 16.8 | 2.20 | 84 | 17 | 25 | 0.086 | 21.2 | 9.0 | 171.5 | 14.4 | 3.32 | 65 | 13 | 0.041 | 16.0 | -5.2 |
| 22 3 | 6.2 | 170.4 | 17.1 | 2.24 | 63 | 16 | 25 | 0.086 | 19.5 | 8.9 | 168.4 | 14.4 | 3.50 | 48 | 14 | 0.043 | 16.5 | -3.0 |
| 22 10 | 7.0 | 167.7 | 16.5 | 2.20 | 90 | 16 | 23 | 0.077 | 19.7 | 8.7 | 165.4 | 14.5 | 3.43 | 55 | 12 | 0.040 | 14.7 | -5.0 |
| 22 13 | 7.1 | 169.0 | 16.4 | 2.24 | 78 | 18 | 23 | 0.080 | 21.3 | 8.9 | 166.9 | 14.3 | 3.55 | 45 | 15 | 0.047 | 18.0 | -3.3 |
| 22 14 | 7.1 | 167.8 | 16.4 | 2.24 | 75 | 18 | 23 | 0.082 | 21.5 | 8.9 | 165.8 | 14.3 | 3.54 | 43 | 16 | 0.048 | 18.5 | -3.0 |
| 22 15 | 7.1 | 171.4 | 16.4 | 2.25 | 71 | 18 | 24 | 0.083 | 22.4 | 8.9 | 169.4 | 14.3 | 3.53 | 42 | 16 | 0.050 | 19.6 | -2.8 |
| 22 16 | 7.2 | 174.0 | 16.4 | 2.23 | 79 | 18 | 24 | 0.083 | 22.4 | 9.0 | 171.9 | 14.3 | 3.53 | 46 | 15 | 0.048 | 19.0 | -3.4 |
| 23 2 | 6.7 | 170.7 | 16.6 | 2.20 | 18 | 35 | 49 | 0.164 | 42.5 | 8.3 | 168.7 | 14.6 | 3.38 | 16 | 39 | 0.127 | 46.6 | 4.1 |
| 23 3 | 5.8 | 172.9 | 16.6 | 2.20 | 19 | 35 | 49 | 0.163 | 42.8 | 7.5 | 171.0 | 14.6 | 3.38 | 16 | 38 | 0.123 | 46.0 | 3.2 |
| 23 5 | 7.0 | 171.7 | 16.5 | 2.19 | 88 | 17 | 23 | 0.079 | 20.6 | 8.9 | 170.0 | 14.5 | 3.45 | 52 | 13 | 0.042 | 16.0 | -4.6 |
| 24 5 | 5.6 | 194.3 | 17.5 | 2.06 | 60 | 20 | 35 | 0.119 | 27.9 | 8.7 | 192.4 | 14.8 | 3.25 | 40 | 18 | 0.060 | 24.4 | -3.5 |
| Avg | 6.6 | 172.4 | 16.8 | 2.20 | 71 | 20 | 28 | 0.097 | 24.2 | 8.7 | 170.5 | 14.5 | 3.41 | 48 | 17 | 0.056 | 21.2 | -3.0 |
| S.D. | 0.5 | 6.3 | 0.3 | 0.05 | 22 | 6 | 8.3 | 0.027 | 7.2 | 0.4 | 6.3 | 0.2 | 0.09 | 14 | 8 | 0.028 | 9.9 | 3.1 |

Note: Means and Standard Deviations are calculated using 15 minute averages.

TABLE 19. DUCT BURNER TEST DATA: CEM TEST PERIODS, TEST CONDITION 14

| | Gas turbine operating parameters | | | Duct burner operating parameters | | | Ambient conditions | | |
|---|---|---|---|---|---|---|---|---|---|
| Day/hour | Load (MW) | Fuel flow (scfm) | Steam inj. ratio (lb/lb) | Fuel flow (scfm) | Heat input ($10^6$ Btu/hr) | Load (percent) | Temp (°F) | Pressure (in hg) | Relative humidity (%) |
| 22 5 | 14.5 | 3,791 | 0.71 | 1,127 | 70.1 | 43 | 50 | 30.3 | 93.0 |
| 22 6 | 14.3 | 3,722 | 0.72 | 1,146 | 71.3 | 44 | 52 | 30.2 | 94.8 |
| Avg | 14.4 | 3,756 | 0.71 | 1,136 | 70.7 | 43 | 51 | 30.3 | 93.9 |
| S.D. | 0.1 | 48 | 0 | 13 | 0.8 | 1 | 1 | 0.1 | 1.3 |

| | Duct burner inlet | | | | | | | | | Duct burner outlet | | | | | | | | Change across DB |
|---|---|---|---|---|---|---|---|---|---|---|---|---|---|---|---|---|---|---|
| Day/hour | $H_2O$ (%) | QS (dscfm x $10^3$) | $O_2$ (% dry) | $CO_2$ (% dry) | CO (ppm dry) | $NO_x$ (ppm dry) | $NO_x$ (ppm iso) | $NO_x$ (lb/MBtu) | $NO_x$ (lb/hr) | $H_2O$ (%) | QS (dscfm x $10^3$) | $O_2$ (% dry) | $CO_2$ (% dry) | CO (ppm dry) | $NO_x$ (ppm dry) | $NO_x$ (lb/MBtu) | $NO_x$ (lb/hr) | $NO_x$ (lb/hr) |
| 22 5 | 6.4 | 169.7 | 16.9 | 2.38 | 41 | 19 | 28 | 0.096 | 22.8 | 8.3 | 168.6 | 15.1 | 2.97 | 43 | 13 | 0.047 | 15.9 | -6.9 |
| 22 6 | 6.4 | 172.0 | 16.9 | 2.38 | 41 | 18 | 27 | 0.094 | 22.5 | 8.3 | 170.8 | 15.2 | 2.97 | 44 | 13 | 0.046 | 15.7 | -6.8 |
| Avg | 6.4 | 170.9 | 16.9 | 2.38 | 41 | 19 | 28 | 0.095 | 22.6 | 8.3 | 169.7 | 15.1 | 2.97 | 43 | 13 | 0.046 | 15.8 | -6.9 |
| S.D. | 0 | 1.6 | 0.0 | 0.00 | 0 | 0 | 0.5 | 0.002 | 0.2 | 0 | 1.6 | 0.0 | 0.00 | 0 | 0 | 0.001 | 0.2 | 0.1 |

[a]Represents missing data.

Note: Means and Standard Deviations are calculated using 15 minute averages.

## SECTION 3

## PROCESS AND CONTROL EQUIPMENT DESCRIPTION AND OPERATING CONDITIONS

### PROCESS DESCRIPTION

The cogeneration system at Crown Zellerbach's Antioch Mill consists of a gas turbine which is exhausted through a duct burner and a waste heat boiler. The gas turbine is a General Electric Model MS60013 which fires natural gas as the primary fuel and No. 2 fuel oil as a backup source. The turbine design is unique in that it has air-cooled expander buckets which allow power output from the unit to be increased from 30 MWe to 36 MWe. The duct burner is a Coen low $NO_x$ design which normally fires natural gas. No. 6 fuel oil can also be used as an emergency backup fuel source. Under normal operation, the duct burner increases turbine exhaust gas temperatures from 1000°F to between 1200 and 1400°F. The exhaust from the duct burner flows through a Vogt waste heat boiler. The boiler is capable of producing 140,000 lb/hr steam with gas turbine exhaust only, and 260,000 lb/hr steam at the maximum burner firing rate of 140 MBtu/hr. A schematic of the cogeneration system is shown in Figure 1.

The system typically operates 24 hours a day with the gas turbine base loaded at 32 to 35 MWe. During the sampling program, Crown Zellerbach was curtailed to a nominal generation load of 12 MWe by the local utility between the hours of 11:00 P.M. and 6:00 A.M. The waste heat boiler supplies between 180,000 and 250,000 lb/hr of high pressure steam for paper drying and 20,000 lb/hr of low pressure steam for feed water deaeration. The amount of high pressure steam required depends on the grade (thickness) of paper being produced. In addition, an extraction steam turbine coupled to a generator supplies 12.5 MWe. Normal variations in steam demand are typically met by varying the duct burner firing rate between 40 and 140 MBtu/hr.

### OPERATING CONDITIONS

Table 20 summarizes gas turbine and duct burner operating conditions for the eight test periods and the purpose of each test condition. Operating conditions used to divide the CEM data into test conditions are summarized in Table 21. Included in both tables are mean values and ranges of turbine generator loads, duct burner firing rates and steam injection ratios. Actual operating conditions during each test period are documented in Tables 1 through 19 in Section 2.

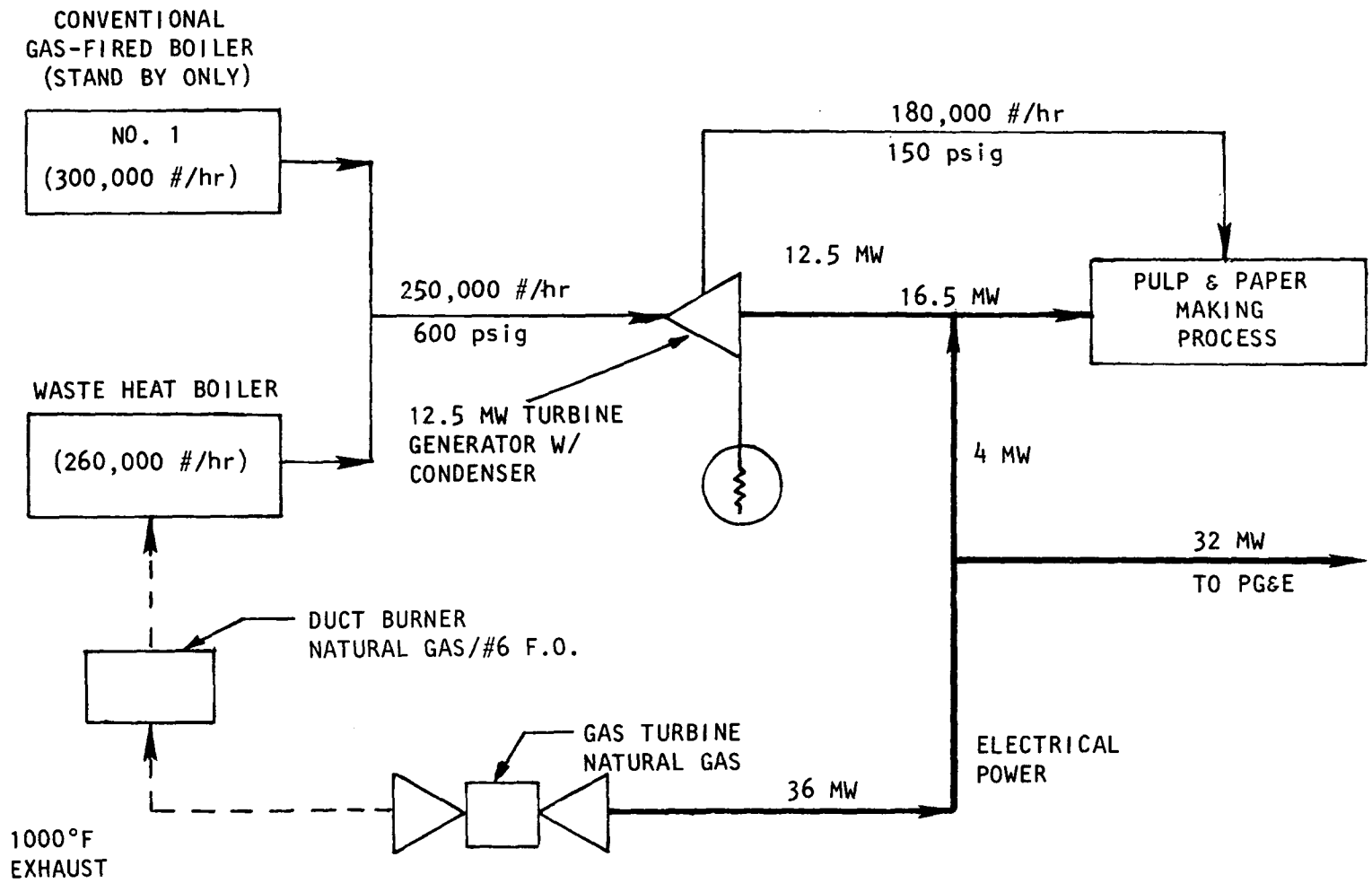


Figure 1. General layout of Crown Zellerbach cogeneration power plant.

TABLE 20. TEST CONDITIONS FOR CHARACTERIZING DUCT BURNER EMISSIONS

| Test number | Turbine load (MLO) | | Duct burner load (MBtu/hr) | | Steam injection ratio (lb/lb) | | Purpose of test |
|---|---|---|---|---|---|---|---|
| | Avg | Range | Avg | Range | Avg | Range | |
| 1 | 34 | 33-35 | 134 | 120-137 | 0.94 | 0.92-0.95 | Quantify duct burner $NO_x$ emissions as a function of burner load for low inlet $NO_x$ levels |
| 2 | 35 | 35-36 | 93 | [a] | 0.97 | 0.95-0.99 | |
| 3 | 35 | 34-35 | 41 | [a] | 0.95 | 0.95-0.96 | |
| 4 | 32 | 31-33 | 138 | 136-140 | 0.50 | 0.49-0.51 | Determine effects of changing $NO_x$ levels at burner inlet |
| 5 | 33 | 32-34 | 44 | 40-51 | 0.46 | 0.44-0.47 | |
| 6 | 32 | 31-33 | 137 | 131-139 | 0.00 | [a] | Determine effects of changing inlet $NO_x$ levels at burner inlet |
| 7 | 33 | 33-34 | 42 | 41-46 | 0.00 | [a] | |
| 8 | 11 | 11-12 | 141 | 133-143 | 0.00 | [a] | Determine effects of changing $O_2$ levels at the burner inlet |

[a]Parameter held constant over test period.

TABLE 21. RANGE OF OPERATING CONDITIONS FOR CATEGORIZING CEM DATA

| Test condition | Turbine load (MW) | | Duct burner load (MBtu/hr) | | Steam injection ratio (lb/lb) | |
|---|---|---|---|---|---|---|
| | avg | range | avg | range | avg | range |
| 1 | 13.8 | 12.3 - 14.5 | 144 | 142 - 145 | 0.74 | 0.70 - 0.80 |
| 2 | 34.6 | 33.4 - 36.4 | 85 | 69 - 95 | 0.96 | 0.93 - 1.00 |
| 3 | 35.0 | 34.7 - 36.5 | 64 | 60 - 73 | 0.97 | 0.94 - 0.99 |
| 9 | 12.8 | 12.8 - 12.9 | 113 | 108 - 119 | 0.93 | 0.93 - 0.94 |
| 10 | 12.6 | a | 56 | a | 0.77 | a |
| 11 | 28.5 | 28.5 - 28.6 | 55 | 49 - 61 | 0.72 | 0.66 - 0.77 |
| 12 | 12.9 | 11.6 - 14.5 | 134 | 113 - 150 | 0.76 | 0.70 - 0.79 |
| 13 | 12.8 | 11.9 - 13.6 | 118 | 100 - 126 | 0.71 | 0.07 - 0.79 |
| 14 | 14.4 | 14.3 - 14.5 | 70.7 | 70.1 - 71.3 | 0.71 | 0.71 - 0.72 |

[a]One test point for this test condition; range not applicable.

## SECTION 4

## SAMPLING LOCATIONS

Emission measurements were conducted at the inlet and outlet of the duct burner at the sample locations shown in Figure 2. The mobile laboratory was located near the base of the stack with one heated sample line running up to the stack test platform and another running along the waste heat boiler to the inlet transition duct. Reference method sample trains were positioned at both inlet and outlet sampling locations.

### DUCT BURNER INLET

Figure 3 shows a side view of the inlet sample location. The sampling plane is located two feet downstream of an expansion joint and approximately 5 ft downstream from the 90° turn in the gas turbine outlet duct. This location is approximately 15 ft upstream of the duct burners. Two sample ports were originally located in an access door in the transition duct. Two additional sample ports were installed to provide more representative sampling of the duct for preliminary stratification testing. Location of the sample ports are shown in Figure 4. Also shown in Figure 4 are the inside and outside duct dimensions, locations of stratification sample points, and the location of the CEM inlet sample probe.

### DUCT BURNER OUTLET

A schematic of the outlet test site is shown in Figure 5. The sample ports are located at the 64 ft level of the 100 foot stack. The sample plane is 1.74 stack diameters downstream and 3.13 stack diameters upstream of the nearest flow disturbances. This sampling location does not meet the Reference Method 1 criteria of 2 stack diameters downstream of the nearest flow disturbance. Velocity traverses in the stack were conducted using 24 sampling points instead of the maximum 16 points specified in Method 1. Sample point locations for velocity traverses and the location of the CEM outlet sample probe are shown in Figure 6.

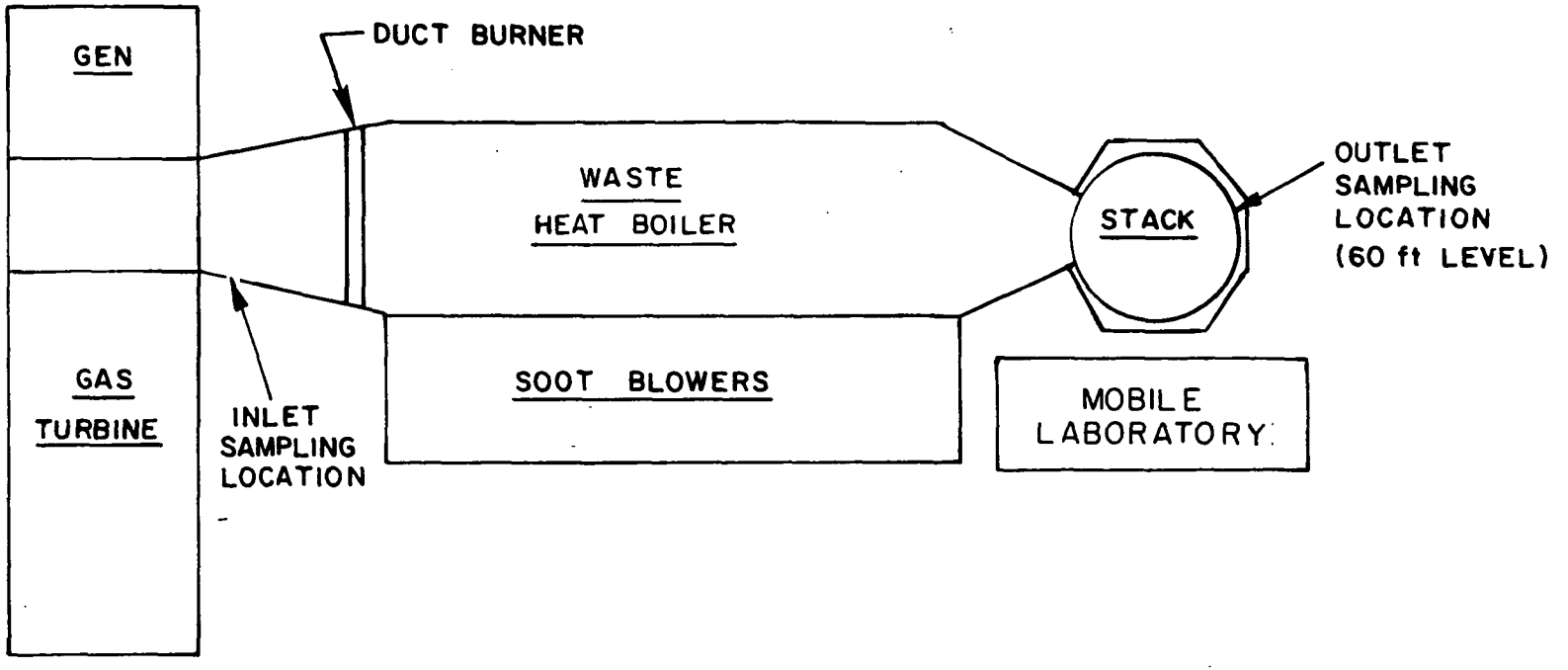


Figure 2. Crown Zellerbach cogeneration facility schematic.

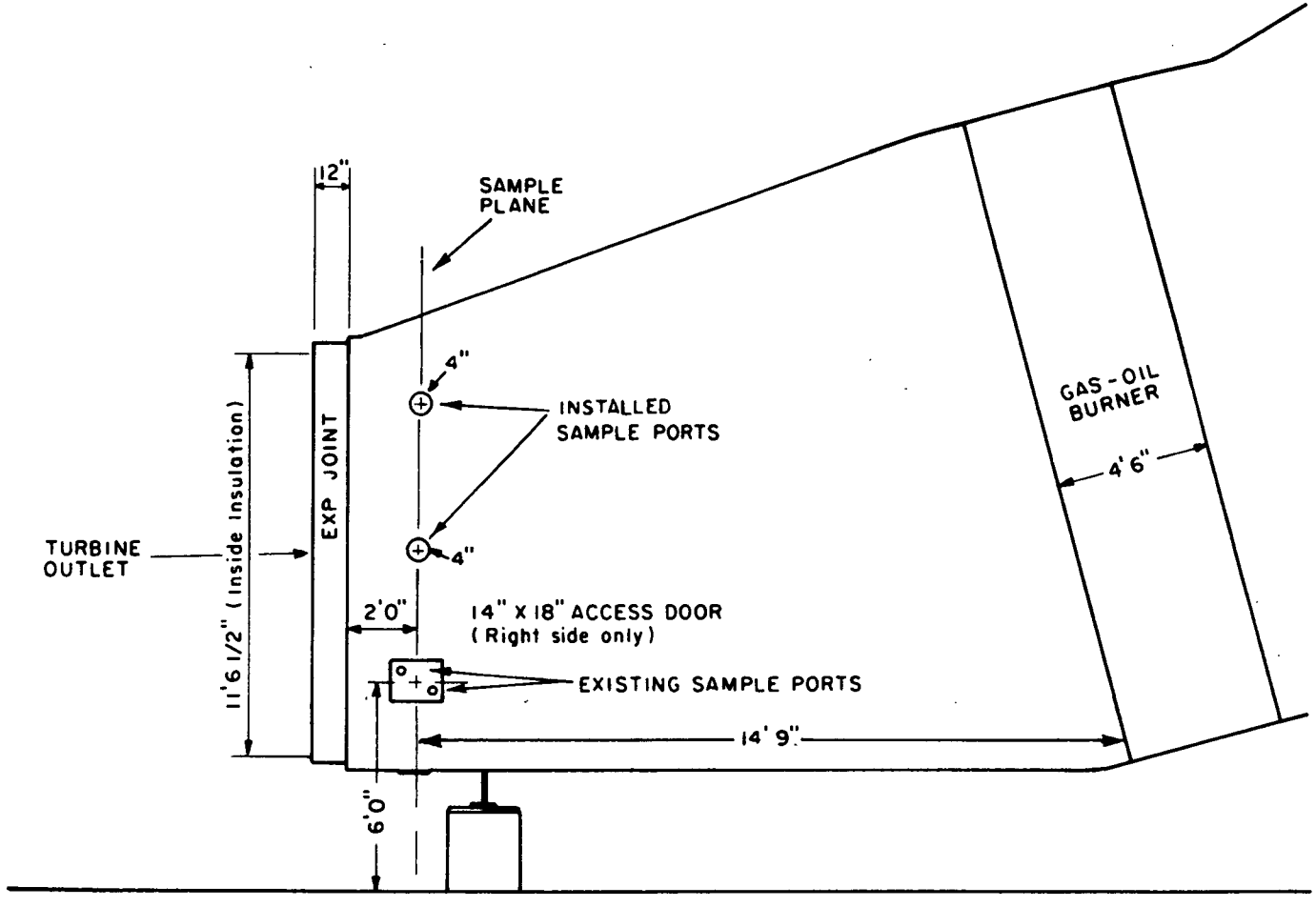


Figure 3. Duct burner inlet sampling location.

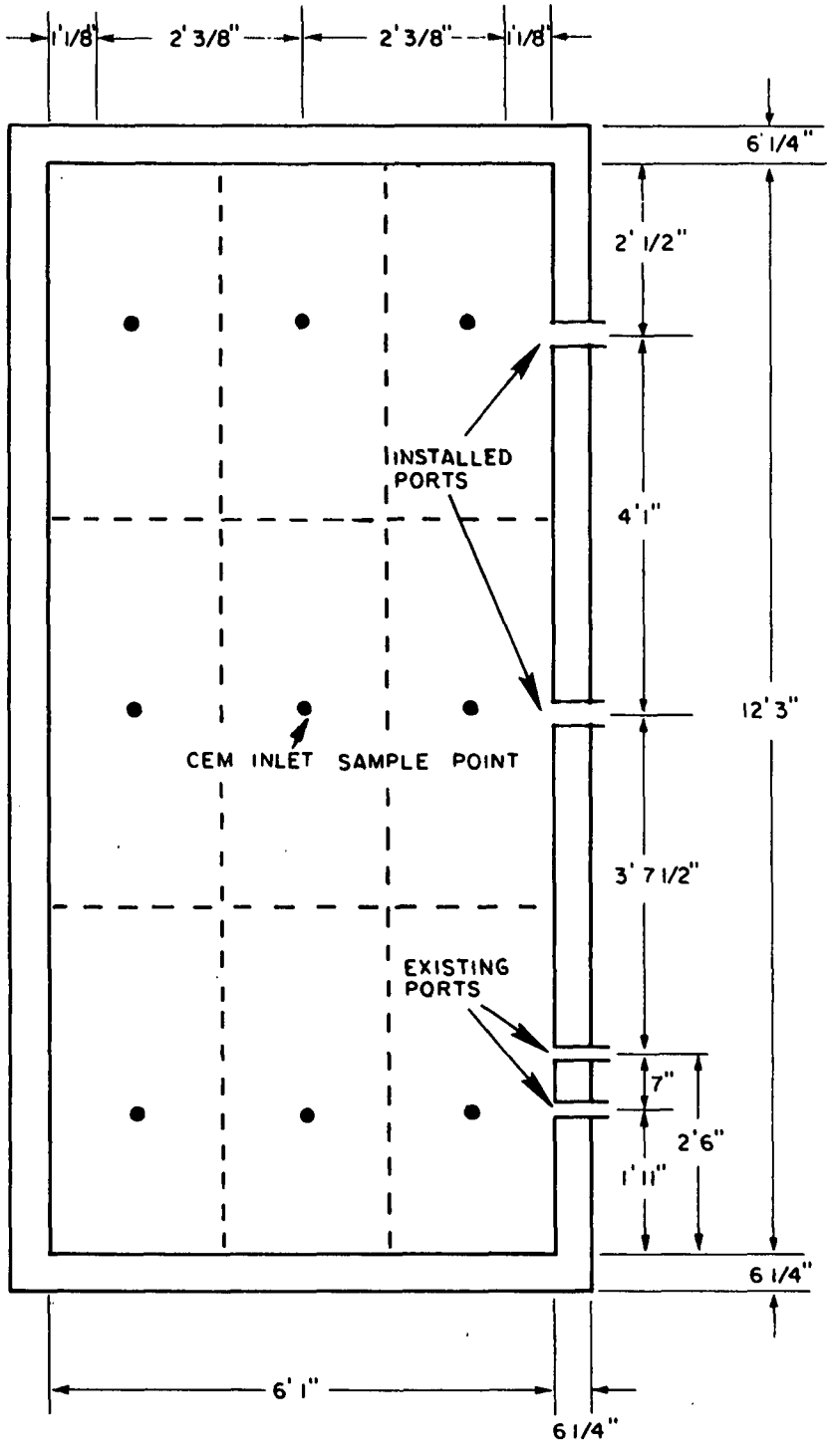


Figure 4. Duct burner inlet sampling port and point locations.

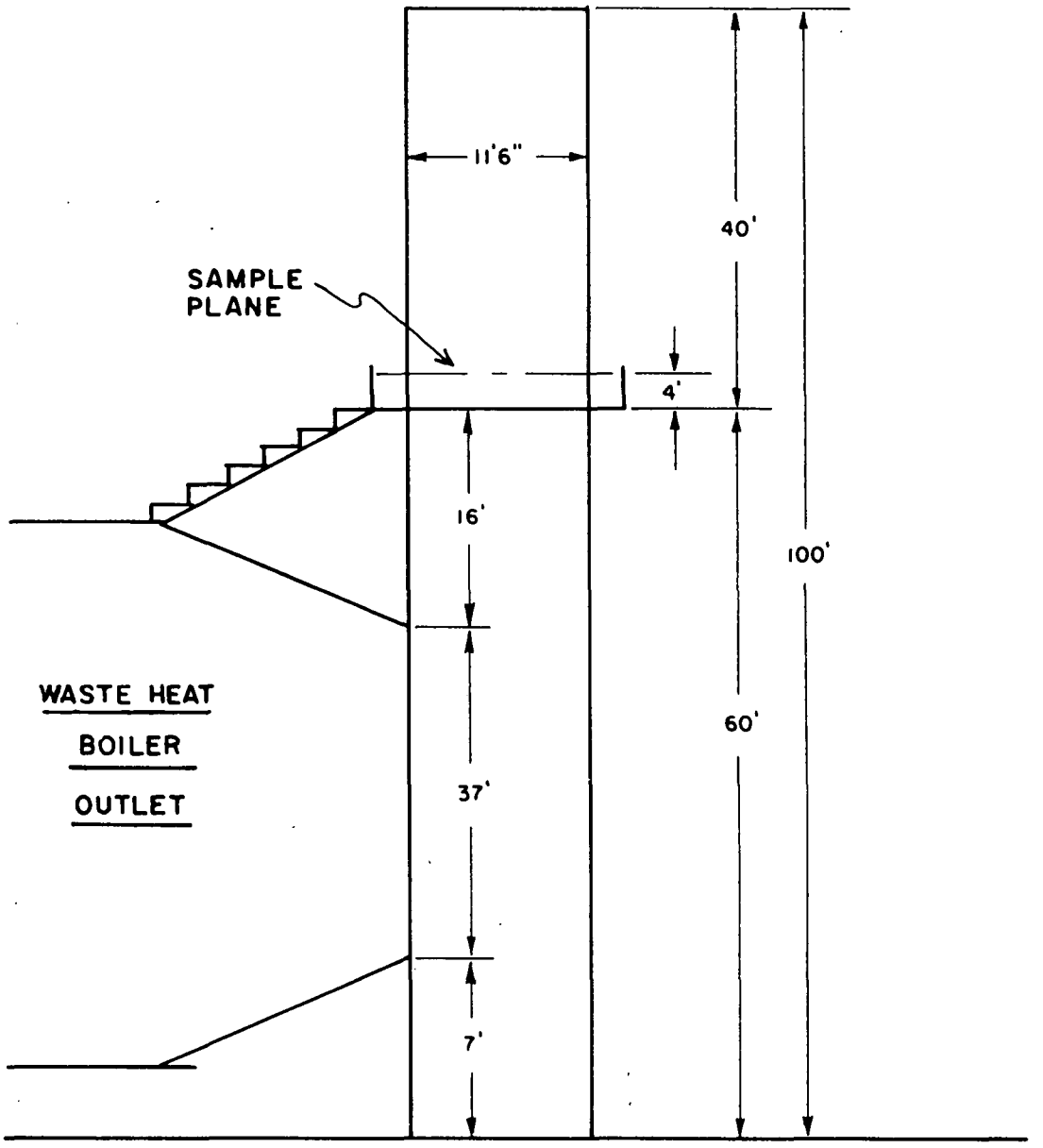


Figure 5. Duct burner outlet (stack) sampling location.

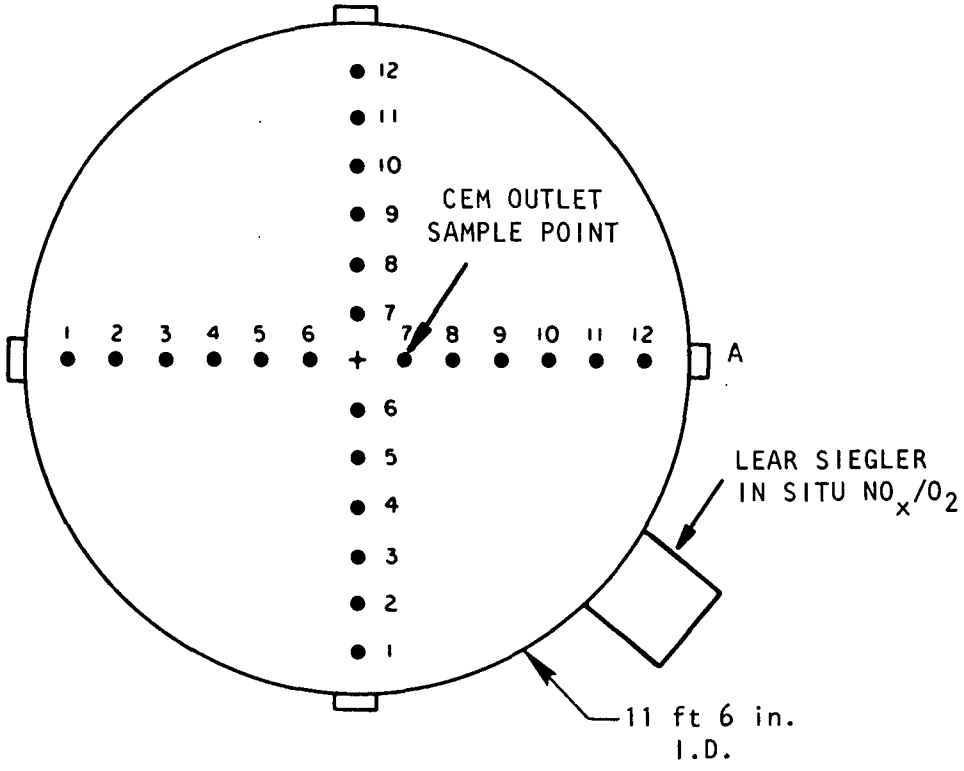


| POINT | DISTANCE FROM WALL (inches) |
|---|---|
| 1 | 2 7/8 |
| 2 | 9 1/4 |
| 3 | 16 15/16 |
| 4 | 24 7/16 |
| 5 | 34 1/2 |
| 6 | 49 1/8 |
| 7 | 88 7/8 |
| 8 | 103 1/2 |
| 9 | 113 9/16 |
| 10 | 121 11/16 |
| 11 | 128 3/4 |
| 12 | 135 1/8 |

Figure 6. Duct burner outlet (stack) sample point locations.

## SECTION 5

## SAMPLING AND ANALYTICAL PROCEDURES

### OVERVIEW

The test program to characterize the effects on emissions of a duct burner in an industrial gas turbine cogeneration facility was conducted utilizing both continuous and manual reference method procedures. During the test effort, the duct burner was continuously monitored for $O_2$, $CO_2$, $NO_x$, and CO, as well as stack velocity and temperature.

Continuous monitoring data consisted of 15-minute averages for measured inlet and outlet $O_2$, $CO_2$, $NO_x$, and CO concentrations. $NO_x$ emission rates on a lb/hr basis were calculated using measured outlet flow rate data and a derived inlet flow rate based on duct burner fuel flow. In addition, $NO_x$ emission rates were calculated based on the F factor method using gas turbine and duct burner fuel flows with $O_2$ and $CO_2$ as measured diluents. Moisture content of the flue gas was determined based on calculated combustion moisture, measured steam injection rates, and local ambient humidity.

For emission measurements conducted during the eight duct burner test conditions, inlet and outlet emission values were calculated with both mass flow rate data and with the F-factor method. Calculated moisture values were verified with Method 4 moisture test data. Transducer readings in the outlet stack were verified with 24 point velocity traverses.

A schematic diagram of the measurement sites at Crown Zellerbach's cogeneration system is shown in Figure 7. Table 22 presents a summary of measured parameters obtained during the test program from each sampling site and from the cogeneration unit control room. Procedures for measuring flue gas emissions, velocity and moisture content, gas turbine and duct burner operating conditions, and fuel sampling and analysis procedures are outlined in the following sections.

### MEASUREMENT OF FLUE GAS EMISSIONS

Flue gas parameters were measured at the inlet and outlet of the duct burner with an EPA IERL/RTP Mobile CEM system. The EPA IERL/RTP Mobile CEM system is housed in a 40 foot environmentally controlled bus. Installed in the bus are all the instrumentation and sample conditioning equipment utilized to continuously monitor the cogeneration system emissions.

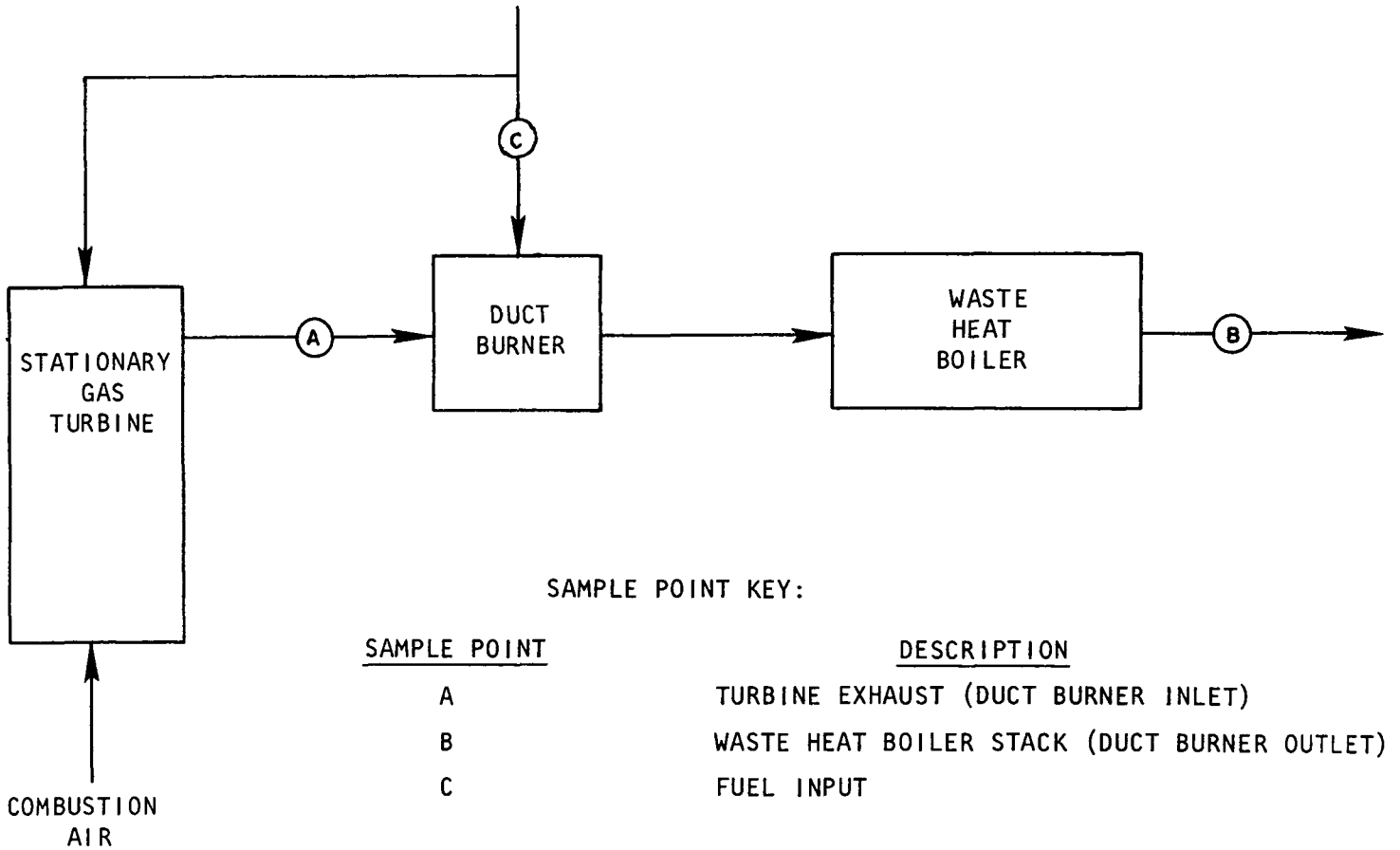


SAMPLE POINT KEY:

| SAMPLE POINT | DESCRIPTION |
|---|---|
| A | TURBINE EXHAUST (DUCT BURNER INLET) |
| B | WASTE HEAT BOILER STACK (DUCT BURNER OUTLET) |
| C | FUEL INPUT |

Figure 7. Schematic of gas turbine/duct burner sample locations.

TABLE 22. DUCT BURNER TEST PROGRAM MEASUREMENT PARAMETER SUMMARY

| Measurement category | Specific measurement | Measurement site (see Figure 7) | Measurement method |
|---|---|---|---|
| Turbine operating parameters | 1. Load | 1. Steam plant control room | 1. $MW_e$ indicator |
| | 2. Fuel flow rate | 2. Steam plant control room | 2. Orifice meter |
| | 3. Exhaust temperature | 3. Steam plant control room | 3. Thermocouple |
| | 4. Combustor inlet pressure | 4. Steam plant control room | 4. Pressure transducer |
| | 5. Ambient temperature | 5. Steam plant control room | 5. Thermocouple |
| | 6. Steam flow rate for $NO_x$ control | 6. Steam plant control room | 6. Orifice meter |
| Duct burner operating parameters | 7. Fuel flow rate | 7. Steam plant control room | 7. Orifice meter |
| Boiler operating parameters | 8. Steam flow rate | 8. Steam plant control room | 8. Orifice meter |
| | 9. Steam temperature | 9. Steam plant control room | 9. Thermocouple |
| | 10. Steam pressure | 10. Steam plant control room | 10. Pressure transducer |
| Turbine exhaust measurements | 11. Flow rate | 11. Points A and B | 11. EPA Method 2/calculated[a] |
| | 12. Moisture content | 12. Points A and B | 12. EPA Method 4/calculated[b] |
| | 13. Oxygen content | 13. Points A and B | 13. EPA Method 20/Method 3 |
| | 14. NO content | 14. Points A and B | 14. EPA Method 20 |
| | 15. $NO_x$ content | 15. Points A and B | 15. EPA Method 20/Method 7 |
| | 16. CO content | 16. Points A and B | 16. EPA Method 10[c] |
| | 17. Temperature | 17. Points A and B | 17. Thermocouple |
| | 18. Continuous $NO_x$ analyzer readings | 18. Steam plant control room | 18. Lear Siegler in-situ continuous $NO_x/O_2$ monitor |
| Fuel analysis | 19. Ultimate analysis | 19. Point C | 19. ASTM D1945-81 |
| | 20. Heating value | 20. Point C | 20. ASTM D3588-81 |

[a]Inlet flow rates (Point A) are determined from measured outlet flow rate and the change in flow rate across duct burner based on fuel flow and combustion stoiciometry.

[b]Calculated moisture content is determined from calculated combustion moisture, measured steam injection rate, and ambient humidity.

[c]No ascarite used, $CO_2$ interference corrected with interference curve.

The measurement sensors utilized are listed in Table 23. A schematic of the total data generation/acquisition system is shown in Figure 8. This schematic depicts the interconnection of the sensors contained in the mobile laboratory. The data were acquired on a continuous basis by an onboard data logger. Measured parameters were averaged on a 15 minute basis during continuous monitoring and during test periods described in Section 3.

A schematic of the flow system is shown in Figure 9. Figures 10, 11, 12, 13, and 14 contain schematics of the valve switching box, the wet and dry sample conditioning systems, the sample distribution assemblies, and the CEM probe assembly. Calibrations were conducted directly to the instruments and through the sample line. Sample line calibrations were conducted by closing the sampling valve and opening the calibration valve in the valve box, allowing calibration gases to pass from the sampling probes, through the sample lines, and to the conditioning systems and analyzers. The extracted flue gas was routed to the mobile CEM via multitube heated sample lines consisting of 3/8 inch OD thick-walled teflon tubing.

The sample conditioning system was configured to provide a wet gas stream for the $NO_x$ analyzers and a dry gas stream for the $O_2$, $CO_2$ and CO analyzers. Particulate matter was removed in the heated valve switching box using a low pressure drop glass fiber filter. The particulate free stream was transported through heat-traced teflon tubing to the conditioning systems.

The wet particulate free sample gas was split into a wet gas stream and a dry gas stream in a temperature controlled hot box (wet sample conditioning system). A flow schematic of the wet sample conditioning system is shown in Figure 10. The wet gas stream is pumped through a heated sample pump to feed the $NO_x$ instrument flow capillaries. The dry gas stream was directed to the dry gas conditioning system for moisture removal.

Moisture removal was accomplished by passing the sample through a dual pass condenser as shown in Figure 12. The first pass occurs under reduced pressure in which the pump draws the sample through the coil, followed by a second pass under pressure in which final moisture removal is accomplished. At this point, the dry sample gas is passed through the valve distribution system shown in Figure 13, which supplies a flow regulated sample stream to the $O_2$, CO, and $CO_2$ instruments as shown in Figure 9.

The CEM probe assembly is shown in Figure 14. The probe is composed of a Carpenter 20 liner within a 316 SS sheath for support. Inlet and outlet probes were positioned in areas of average $O_2$ and $NO_x$ concentrations (see Section 4.0) based on results of preliminary stratification checks.

A pitot tube assembly was attached to the outlet CEM probe to determine flow rate from the duct burner. Pitot tube positioning in the outlet stack was based on an initial velocity traverse. A complete velocity traverse was conducted during each test period to validate transducer readings at this location. Velocity traverses were conducted using EPA Method 2. A type K thermocouple was attached to the probe even with the tip of the pitot tube.

TABLE 23. SAMPLING PARAMETERS AND METHODOLOGY FOR CEMS

| Parameter | Model/measurement | Data recording |
|---|---|---|
| $NO_x$ | Thermo electron Model 10A (chemiluminescence) | Kaye Digistrip III Process Monitor, strip chart |
| CO | Horiba PIR 2000 (NDIR) | Kaye Digistrip III Process Monitor, strip chart |
| $O_2$ | MSA 802 (paramagnetic) | Kaye Digistrip III Process Monitor, strip chart |
| $CO_2$ | Horiba PIR 2000 Beckman 864 (NDIR) | Kaye Digistrip III Process Monitor, strip chart |
| Volumetric gas flow rate | Pitot tube flow sensor; pressure transducer | Kaye Digistrip III Process Monitor, strip chart |
| Stack temperature | K-type thermocouple | Kaye Digistrip III Process Monitor, strip chart |

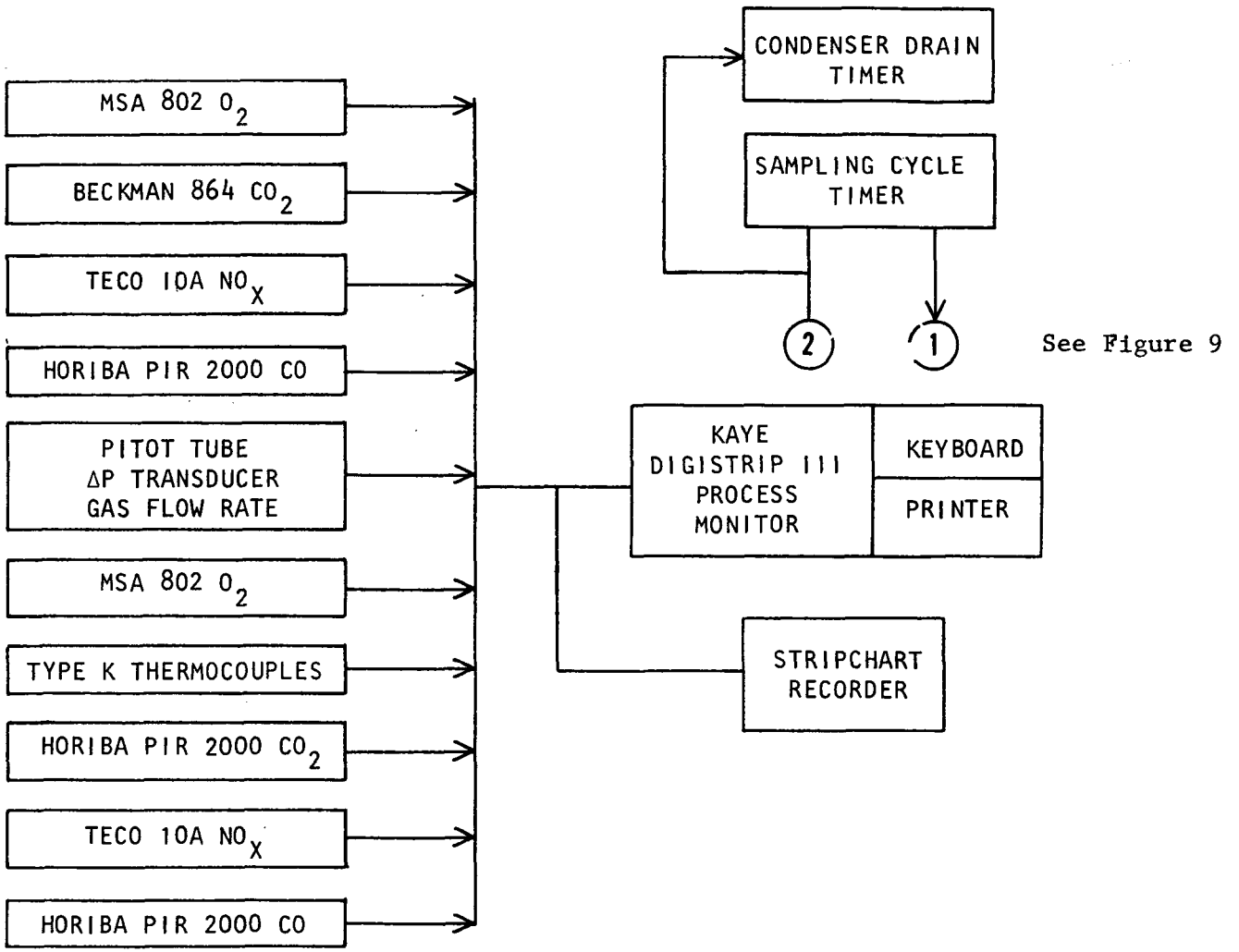


Figure 8. Data acquisition system schematic.

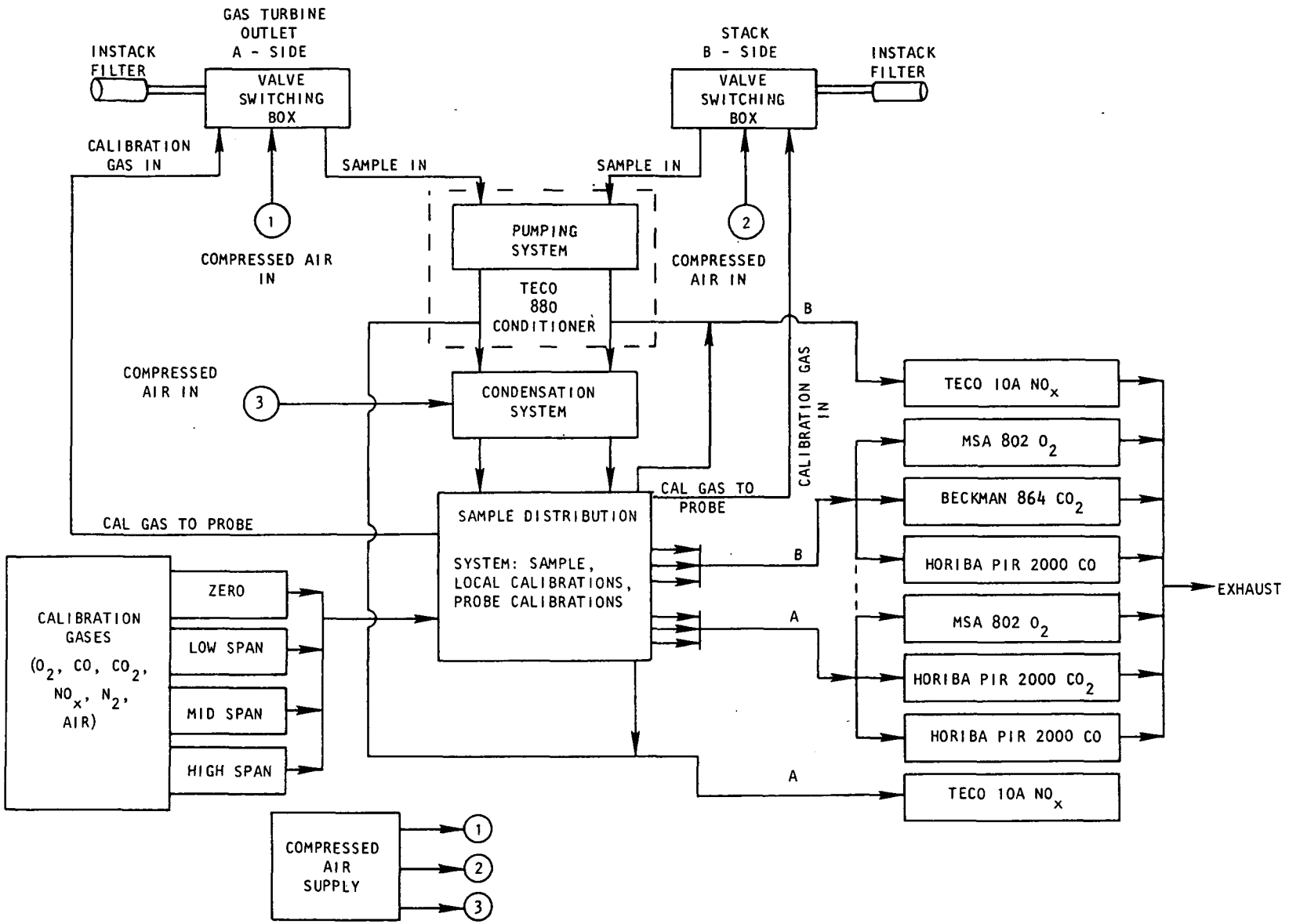


Figure 9. Mobile laboratory flow schematic.

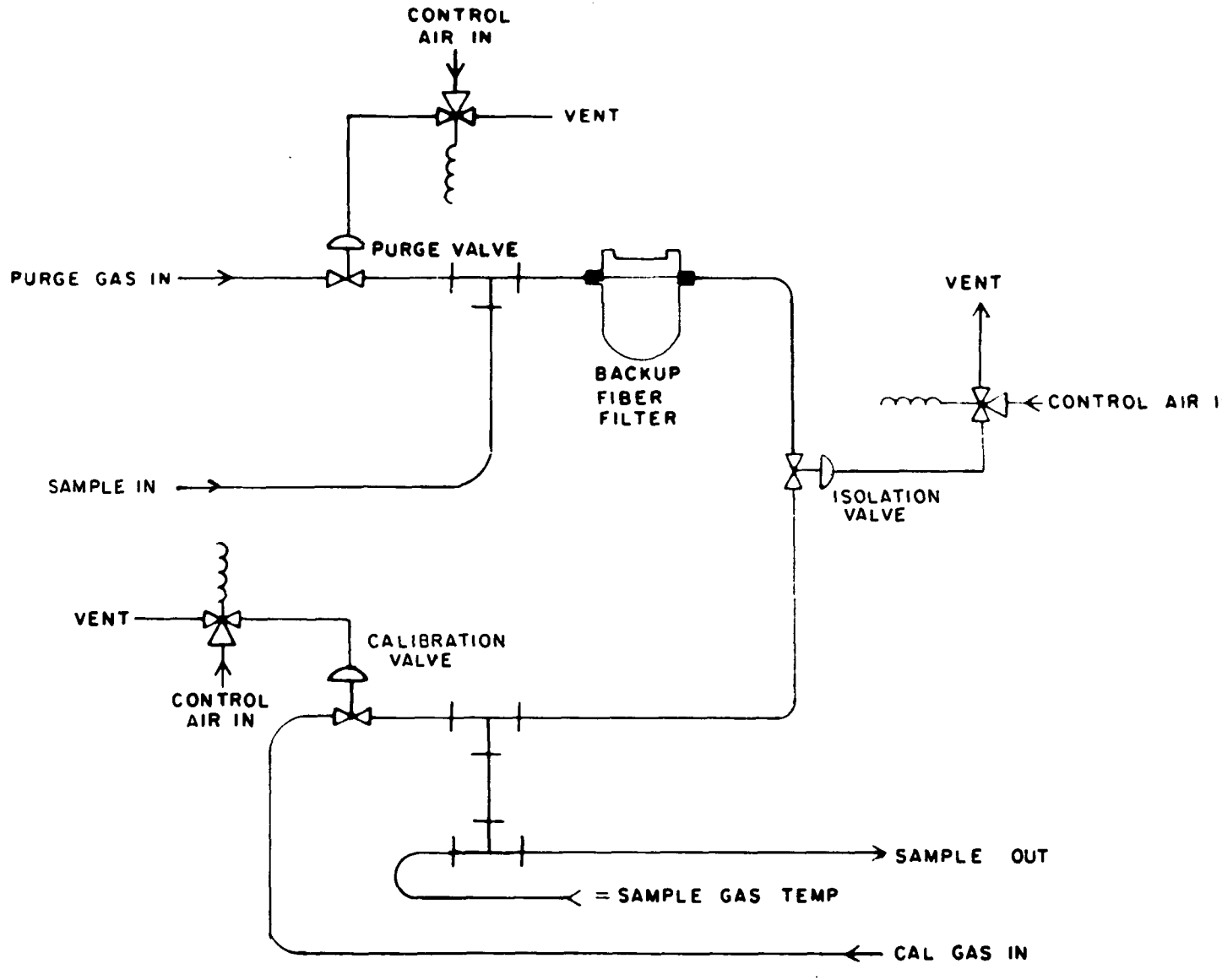


Figure 10. Valve switching box configuration.

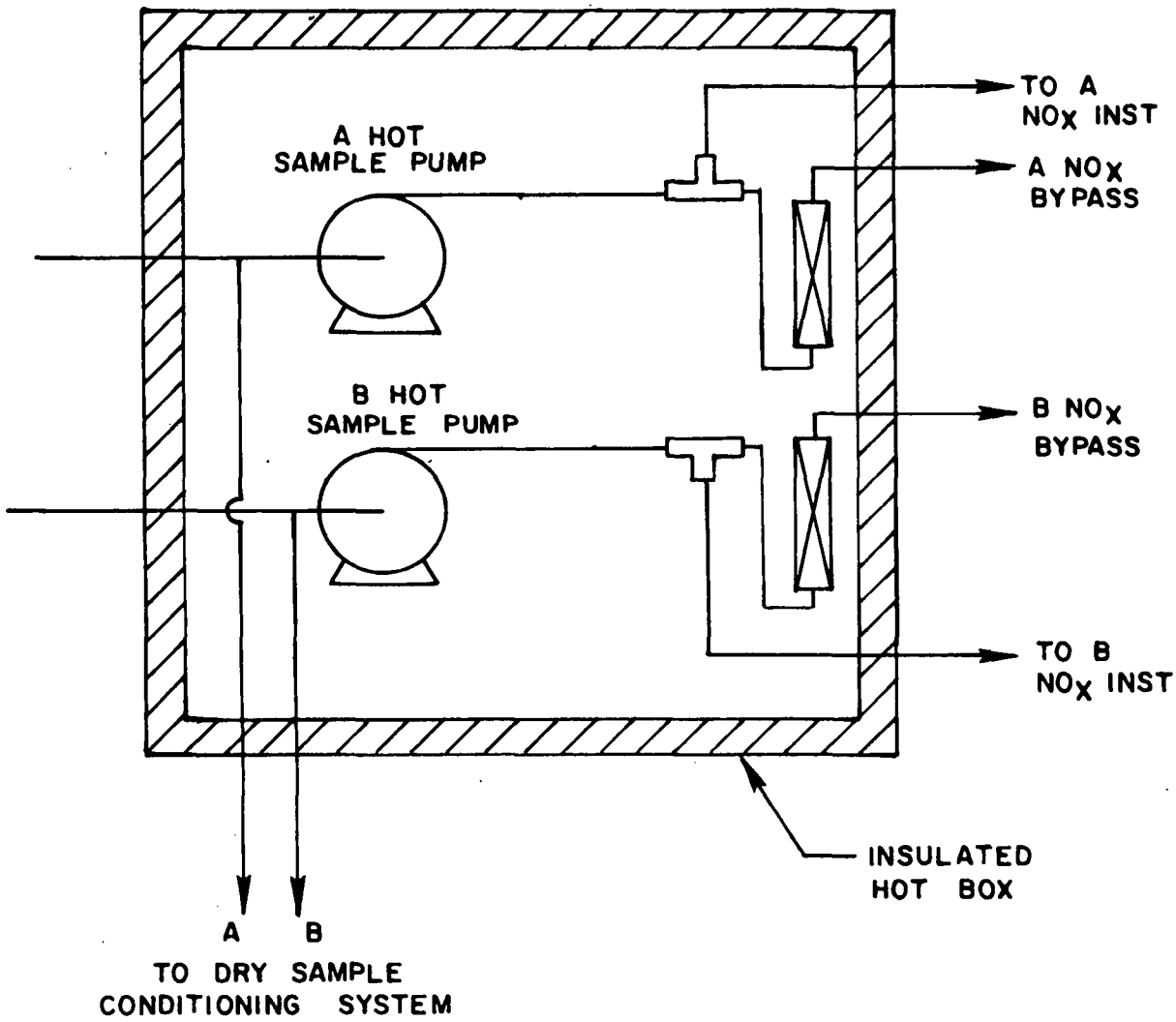


Figure 11. Wet sample conditioning system.

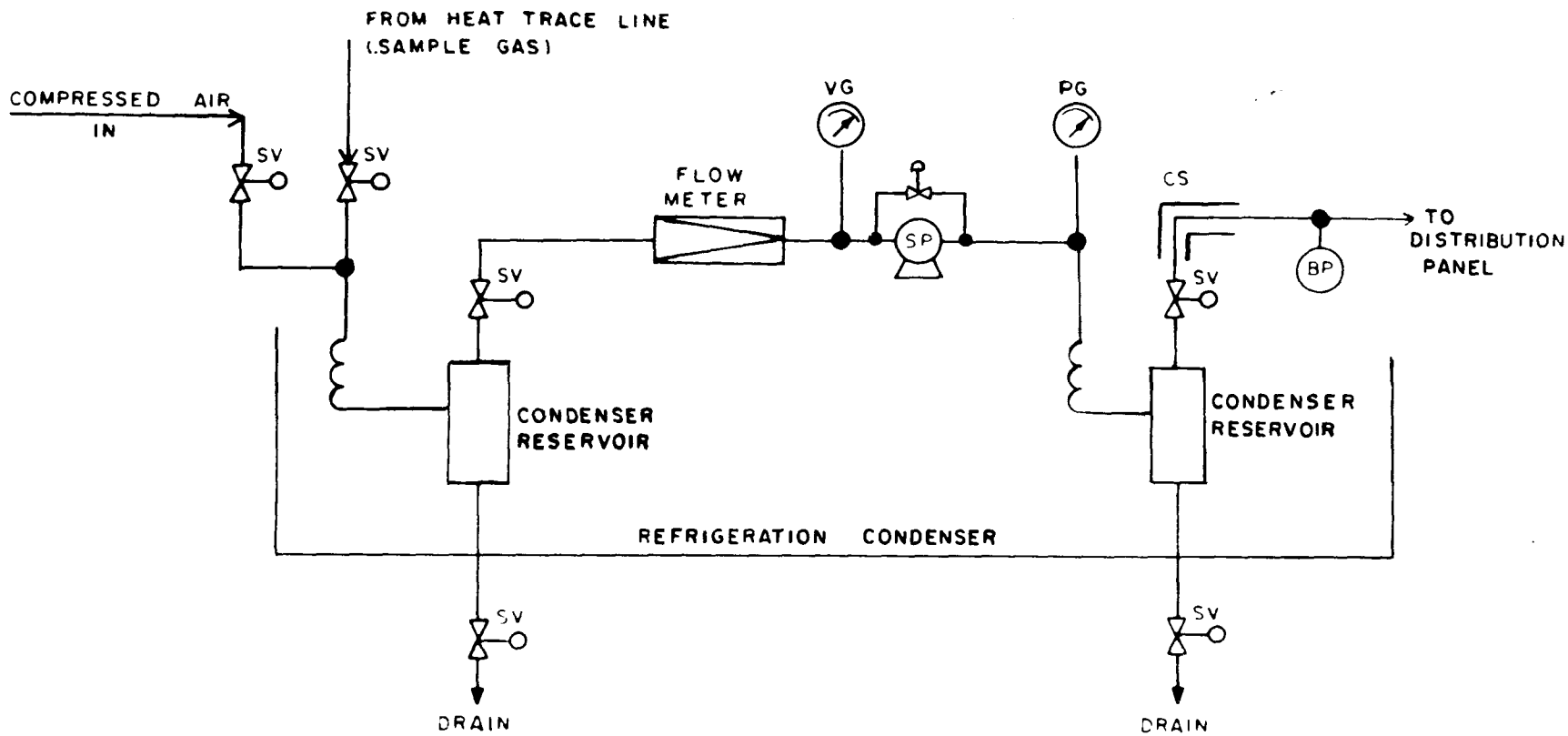


LEGEND

SV: SOLENOID VALVE
SP: SAMPLE PUMP
PG: PRESSURE GAUGE
VG: VACUUM GAUGE
CS: MOISTURE SENSOR
BP: BACK PRESSURE REGULATOR

Figure 12. Dry sample conditioning system.

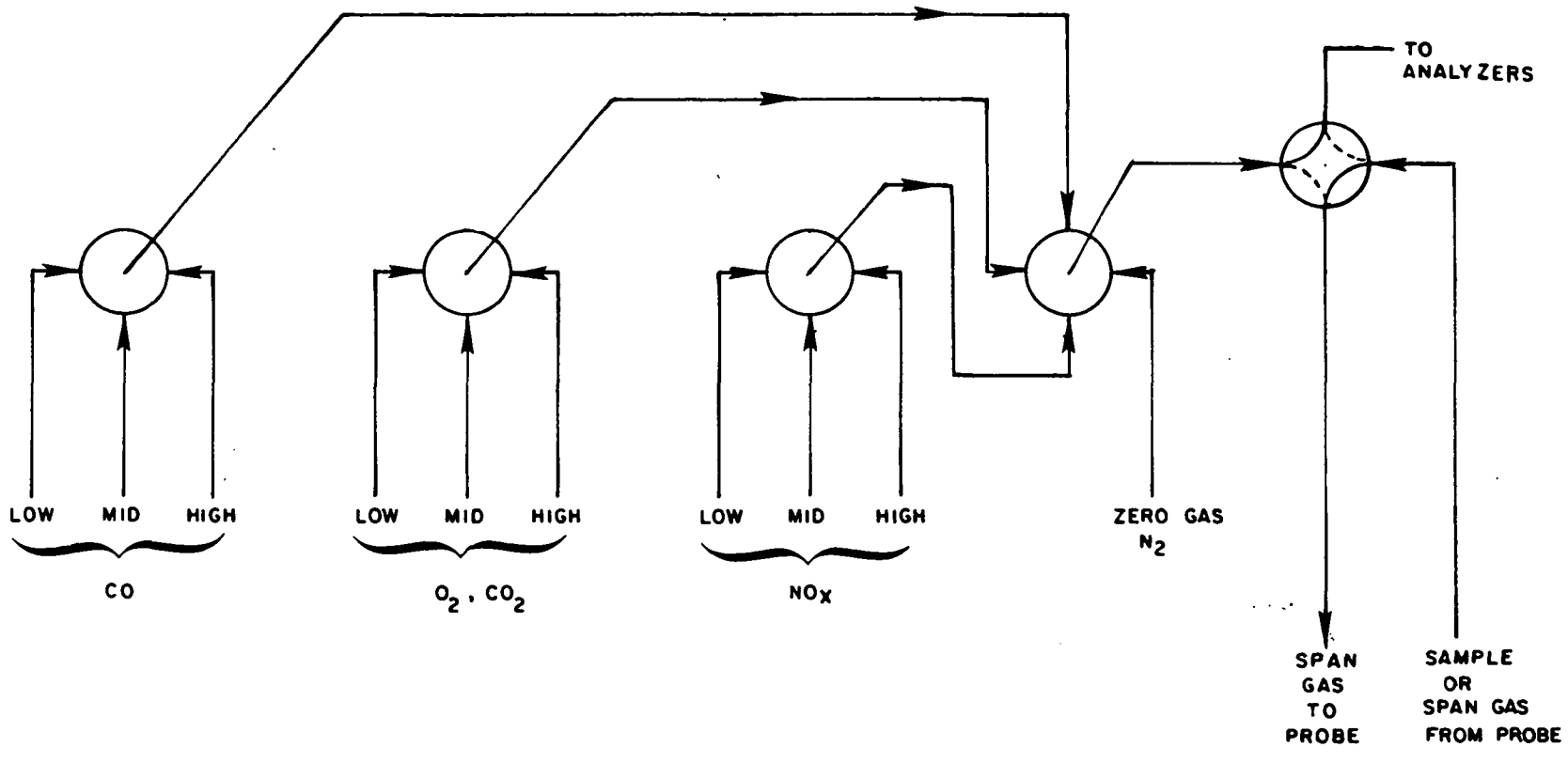


Figure 13. Sample distribution system.

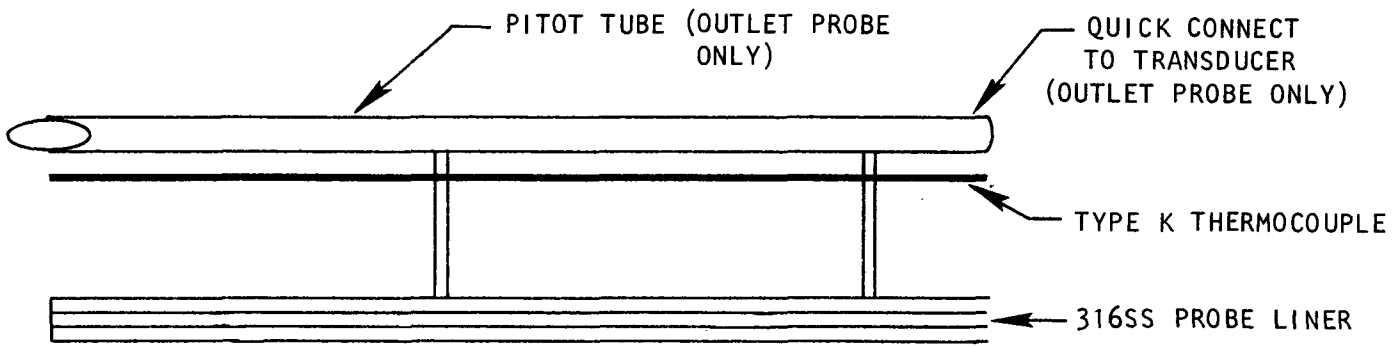


Figure 14. CEM sample probe.

Data acquisition was accomplished with a Kaye Digistrip III Process Monitor. This unit is capable of accepting 48 analog signals at a scan rate of 10 seconds. The microprocessor acquires and processes the data, printing out interval reports and providing instantaneous responses.

Response Time

Response time of the $NO_x$ and $O_2$ instruments were measured prior to commencement of the test program. Monitor response time is reported as the slower of the average of three sets of upscale and downscale determinations. The upscale determination was based on the time required for the monitor to respond from a zero calibration gas reading to a stable stack effluent reading. The downscale determination was based on the time required for the monitor to respond from a high-level calibration gas concentration to a stable stack effluent reading. Response times for the $NO_x$ instruments were 239 seconds for the inlet analyzer and 216 seconds for the outlet analyzer. $O_2$ response times for inlet and outlet analyzers were 234 and 199 seconds respectively. Response time data sheets are included in Appendix E.

Stratification Check

A stratification test was conducted at each sample location to determine representative sample points for velocity and gaseous sampling. The stratification test consisted of measuring velocity, pollutant, and diluent concentrations at each traverse point for a sampling time of 1 minute plus the determined response time of the measurement system. Between each port, the monitoring system was switched to a reference traverse point to correct for temporal process variations during the test run. Data collected at each traverse point were utilized to locate continuous monitoring and reference method sample points.

Stratification data indicated that duct burner inlet concentrations of $O_2$ and $NO_x$ were uniform across the sampling plane. Mean inlet $O_2$ concentration during the stratification check was 15.7 percent with a standard deviation of 0.02 percent. Maximum and minimum values were 15.7 and 15.6 percent. Mean $NO_x$ concentration was 91 ppm with a standard deviation of 1 ppm and minimum and maximum values of 89 and 92 ppm respectively. Velocity measurements were not made at this location and no stratification check was conducted. Based on these results, the duct burner inlet CEM probe was placed in the center of the duct as illustrated in Figure 4.

Stratification data from the duct burner outlet test location (waste heat boiler stack) indicated that uniform $O_2$ and $NO_x$ concentrations exist across both dicameters of the stack. Outlet $O_2$ concentrations averaged 13.8 percent with a standard deviation of less than 0.01 percent. $NO_x$ outlet concentrations averaged 36 ppm with a standard deviation of less than 1 ppm and a range of 35 to 38 ppm.

Velocity stratification across the waste heat boiler stack was significant. A summary of velocity data is presented in Figure 15. Included in the figure is a diagram of the stack cross section and a tabulation of velocities at each traverse point location within the duct. Mean velocity for the stack based on the initial velocity traverse was 63.6 ft/sec. Based on these results, and the results of the gaseous traverse, the CEM was positioned at the point of average velocity, point 7 of Port A, as shown in Figure 15. Test points for the inlet and outlet sample locations are shown in Section 4.0. Results from the stratification check are presented in Appendix E.

Instrument Drift

Instrument drift was determined during the eight duct burner test conditions according to procedures outlined in the reference methods. To validate the continuous emission data collected between these periods, instrument drift was determined based on calibration checks conducted at 24 hour intervals. Instrument drift data are included in Tables 25 and 26 of Section 6.0 and in Appendix F.

Calibration Error

The calibration error test is based on the response of the monitors to zero, low level, mid level, and high level calibration gases. For each test period, the instruments were zeroed with $N_2$ and calibrated with the mid-range calibration gas. The response of the low and high range calibration gases were then determined and compared with the applicable reference method or CEM calibration error specification. Daily calibration curves were prepared for each instrument to facilitate final data reduction. Daily summaries of slope and intercept data are included in Appendix K for each instrument.

Calibration Gas Traceability

All calibration gases utilized during the test program were obtained from Airco Industrial Gases with an analytical certification of concentration (NBS traceable). $NO_x$ and CO calibration gases were analyzed by the manufacturer according to the procedures outlined in EPA Traceability Protocol No. 1. Certification from the manufacturer was obtained stating that the protocol was followed and the supporting data are presented in Appendix I.

$O_2$ and $CO_2$ calibration gas mixtures were analyzed by GCA. Each gas mixture was analyzed in triplicate using EPA Reference Method 3. The average concentrations from the tests were within 0.5 percent of the stated concentrations, and the gas manufacturers' analytical certifications were used.

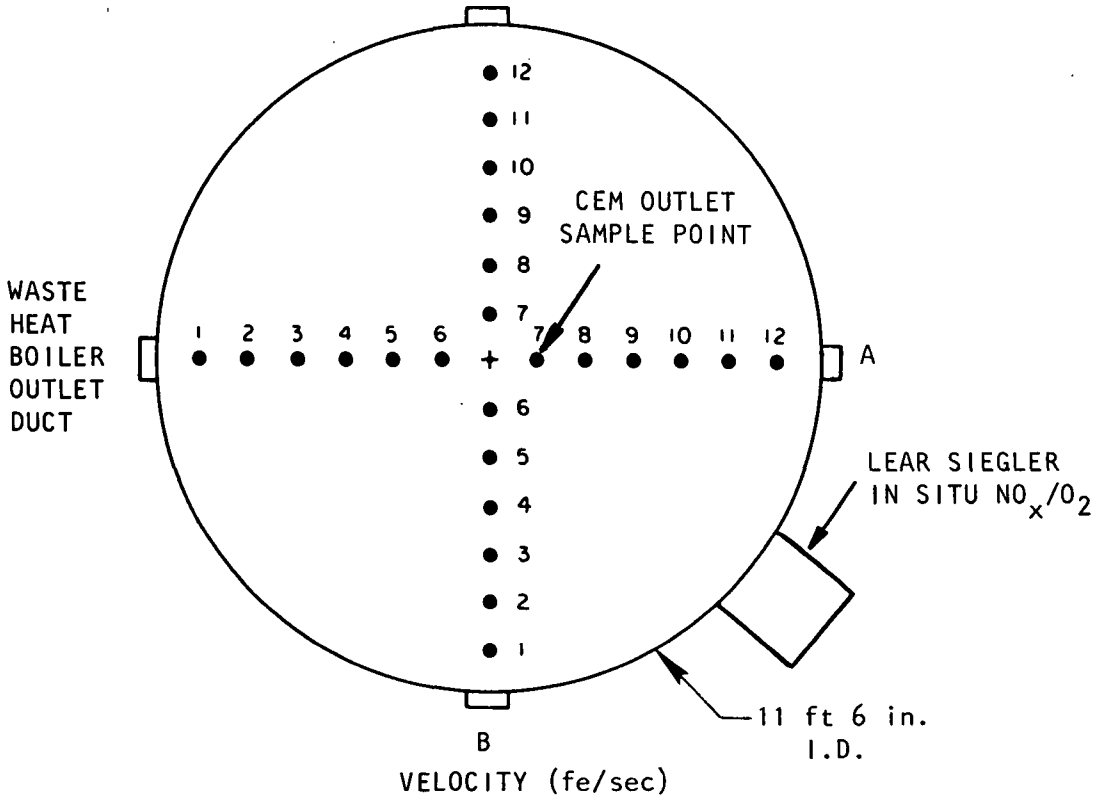


VELOCITY (fe/sec)

| POINT | PORT A | PORT B | DISTANCE FROM WALL (INCHES) |
|---|---|---|---|
| 1 | 30.4 | 65.4 | 2 7/8 |
| 2 | 36.5 | 72.9 | 9 1/4 |
| 3 | 37.7 | 72.9 | 16 15/16 |
| 4 | 37.1 | 72.8 | 24 7/16 |
| 5 | 37.1 | 65.5 | 34 1/2 |
| 6 | 39.4 | 58.3 | 49 1/8 |
| 7 | 69.6 | 52.8 | 88 7/8 |
| 8 | 81.2 | 64.8 | 103 1/2 |
| 9 | 86.5 | 72.1 | 113 9/16 |
| 10 | 86.5 | 73.0 | 121 11/16 |
| 11 | 89.0 | 76.0 | 128 3/4 |
| 12 | 72.4 | 76.0 | 135 1/8 |
| AVG | 58.6 | 68.6 | |
| S.D. | 22.9 | 7.02 | |

Figure 15. Velocity traverse data.

Three span concentrations were used for calibrating the $NO_x$, CO, $CO_2$ and $O_2$ instruments. Span concentrations are presented in Table 24. Pure nitrogen was used as a zero gas for all instruments.

TABLE 24. CALIBRATION GAS CONCENTRATIONS

| | $O_2/CO_2$ (%) | $NO_x$ (ppm) | CO (ppm) |
|---|---|---|---|
| Zero | $N_2$ | $N_2$ | $N_2$ |
| Low | 3.18/4.10 | 52.1 ppm | 30.1 ppm |
| Mid | 8.01/8.05 | 125 ppm | 58.0 ppm |
| High | 12.6/19.0 | 214 ppm | 941 ppm |

Sequence of Events

The CEM was placed onsite in the area designated by plant personnel. The sample transport lines were deployed between the sampling locations and the bus. The filter-valve boxes and reference method instrumentation were installed at the sampling sites.

Following completion of the installation, the instrumentation was activated and allowed to come to equilibrium. The instruments were calibrated and the response time for each monitor was determined, followed by a stratification check at the duct burner inlet and stack monitoring locations. A velocity profile of the outlet sampling location was then obtained using EPA M-2. The placement of the tip of the CEM probe and reference method probe assembly was based on the results of the stratification check and velocity profile determination described previously.

VELOCITY AND MOISTURE MEASUREMENTS

Flue gas volumetric flowrate determinations were conducted during each of the eight duct burner operating conditions at the duct burner outlet (stack). Velocity traverses were conducted using EPA Reference Methods 1 and 2 and flue gas molecular weight was determined using $O_2$ and $CO_2$ instrument data during each test. Moisture was determined using EPA Reference Method 4. Moisture measurements were conducted at both the inlet and outlet sampling locations using a RAC Staksamplr™ sample train. A diagram of the sampling train is shown in Figure 16. Velocity and moisture determination data are presented in Appendices B and C, respectively.

MEASUREMENT OF GAS TURBINE AND DUCT BURNER PARAMETERS

Gas turbine and duct burner operational parameters were recorded during the test program and are summarized in Table 22. Measurements from the gas turbine, duct burner, and waste heat boiler were obtained from control room operating logs and printed output from the control display. During the duct burner test periods, control room readings were obtained at 15 minute

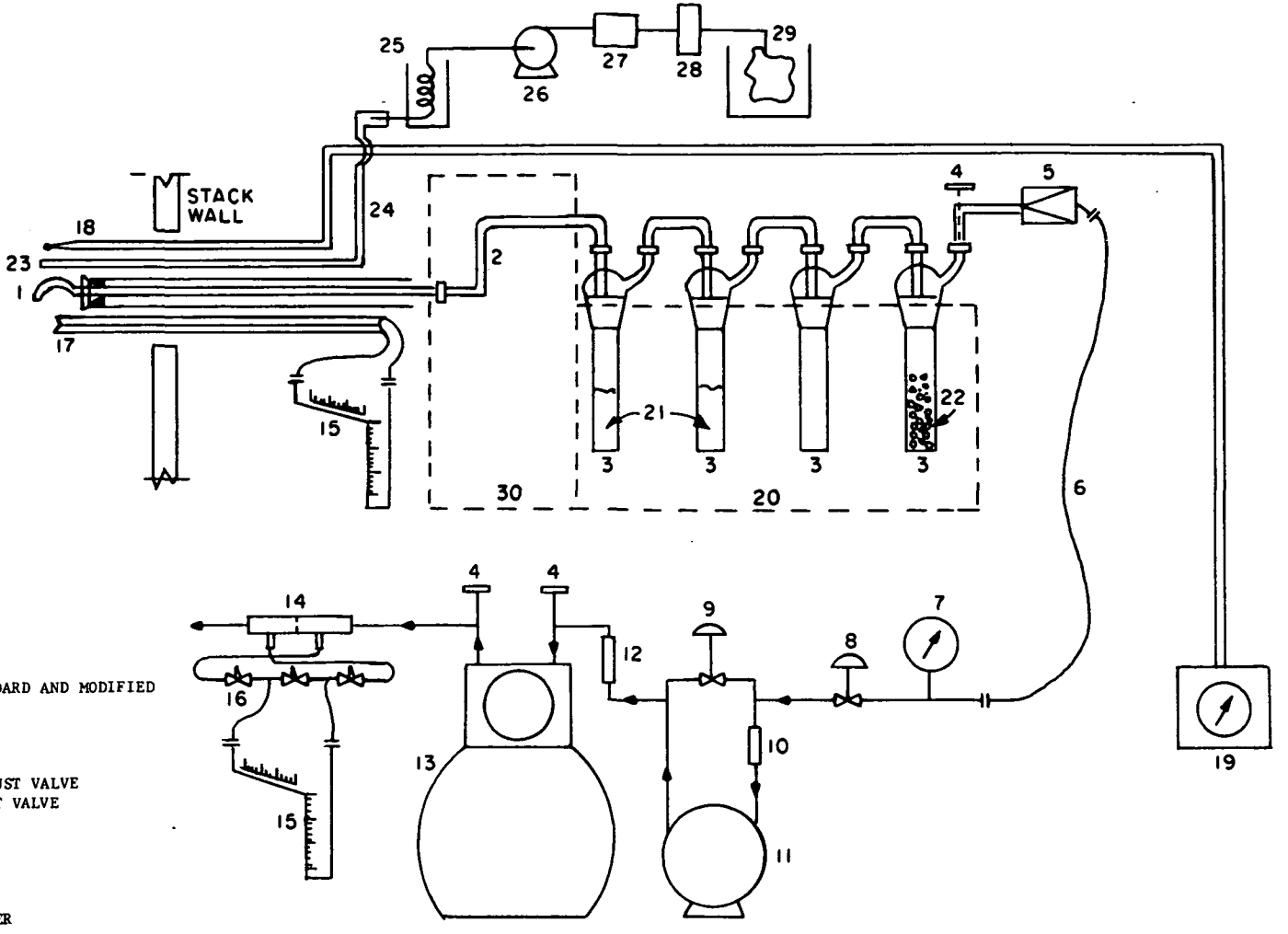


1. PROBE
2. CYCLONE BYPASS
3. IMPINGERS, STANDARD AND MODIFIED
4. THERMOMETER
5. CHECK VALVE
6. UMBILICAL CORD
7. VACUUM GAUGE
8. COARSE FLOW ADJUST VALVE
9. FINE FLOW ADJUST VALVE
10. OILER
11. VACUUM PUMP
12. FILTER
13. DRY GAS METER
14. ORIFICE TUBE
15. INCLINE MANOMETER
16. SOLENOID VALVES
17. PITOT
18. THERMOCOUPLE
19. PYROMETER
20. ICE BATH
21. DISTILLED DEIONIZED WATER
22. SILICA GEL DESICCANT
23. ORSAT PROBE
24. TEFLON ORSAT LINE
25. CONDENSER
26. LEAKPROOF DIAPHRAGM PUMP
27. PULSATION DAMPER
28. FLOW METER
29. TEDLAR BAG
30. HOT BOX

Figure 16. Schematic of RAC Staksamplr™ in particulate sampling configuration.

intervals to characterize operating conditions during each period. During continuous monitoring of the process, gas turbine and duct burner fuel flow integrator readings were recorded at one hour intervals. Printouts from the gas turbine process monitor were also obtained at 1 hour intervals. Process data taken during test periods and continuous emission monitoring are included in Appendix D.

FUEL SAMPLING AND ANALYSIS

Fuel samples were collected from the duct burner gas feed lines using the sampling procedures outlined in ASTM D1145-80. A gas sample was taken during each test condition and subjected to higher heating value, specific gravity, and an ultimate analyses. The following ASTM sampling and analytical procedures were used:

| | |
|---|---|
| Sampling | D1145-80 |
| Natural gas analysis | D1945-81 |
| Higher heating value and specific gravity | D3588-81 |

Results from the fuel analysis show no significant variation in heating value, specific gravity, or component (ultimate) analysis. An average of these parameters for the eight natural gas samples was used to derive F factors, heat input and stoichiometric relationships. The fuel analysis sample log and analytical results, and averaging calculations are included in Appendix H.

## SECTION 6

## PROGRAM QUALITY ASSURANCE

### INTRODUCTION

A detailed Test and Quality Assurance Plan was written, submitted and approved for use under this project. This document was intended to serve as a guide for use during the field, lab and data handling segments of the project. The following subsections document the results of the various QA/QC procedures implemented during this project.

### PRECISION, ACCURACY AND COMPLETENESS

Several QC measures were taken to assure the collection of quality data. A summary of these procedures and their calculated results are presented in the following subsections.

#### Continuous Emission Monitors

GCA followed the recommended procedures outlined in 40 CFR 60 Appendices A, B and F (proposed) to assess the precision and accuracy of the continuous emission monitors used during this program. These checks include determinations of: relative accuracy, precision estimates, and tests for instrument drift and response time. Tables 25 and 26 summarize the results from the Quality Assurance checks.

Relative Accuracy Tests--

Relative accuracy tests were performed to assess the precision and accuracy of the continuous monitors. Reference method tests were performed to generate information to compare to the monitoring data. Results of reference method tests and RA calculations are presented in Appendix G.

Calibration Drift--

Instrument drift was determined according to procedures outlined in Reference Methods 10 and 20 during each duct burner test condition. To validate continuous emission data collected for the overall test program, instrument drift was determined based on calibration checks conducted at 24 hour intervals. Monitor drift data for the overall program (24 hour drift) are presented in Tables 25 and 26.

Results from the 24 hour drift checks indicate that the outlet $NO_x$ instrument exceeded the 2.5 percent of span criterion, the inlet CO instrument exceeded the zero drift criterion, and the outlet CO instrument exceeded the span drift criterion.

TABLE 25. QA RESULTS FOR MEASUREMENTS TAKEN AT THE DUCT BURNER INLET

| Parameter | Relative accuracy | Probability limits: Zero upper | Probability limits: Zero lower | Probability limits: Span upper | Probability limits: Span lower | Response time seconds | 24-hour drift[a] zero | 24-hour drift[a] span |
|---|---|---|---|---|---|---|---|---|
| $NO_x$ | 11.86 | +0.02 | -0.02 | +2.3 | -1.4 | 239 | 0.02 | 1.58 |
| Oxygen | 0.68[a,b] | 0 | 0 | +2.3 | +0.4 | 234 | 0 | 0.35 |
| Carbon dioxide | 0.16[b] | 0 | 0 | +1.8 | -1.4 | <239 | 0.03 | 0.47 |
| Carbon monoxide | NA | +19.3 | -14.7 | +9.9 | -4.2 | <239 | 3.28[a] | 0.77 |
| Flow rate | 6.9[c] | NA | NA | NA | NA | NA | NA | NA |
| Moisture | 10.2[d] | NA | NA | NA | NA | NA | NA | NA |

[a]Exceeded expected performance criterion.

[b]Results in terms of percent $O_2$ ($CO_2$) instead of percent of full scale.

[c]Relative accuracy of flow rate derived gas flow rate and Reference Method 2 derived flow rate.

[d]Relative accuracy of calculated moisture and Reference Method 4 measured moisture.

TABLE 26. QA RESULTS FOR MEASUREMENTS TAKEN AT THE DUCT BURNER OUTLET

| Parameter | Relative accuracy | Probability limits: Zero upper | Zero lower | Span upper | Span lower | Response time seconds | 24-hour drift: zero | 24-hour drift: span |
|---|---|---|---|---|---|---|---|---|
| $NO_x$ | 12.72 | +0.09 | -0.08 | +2.3 | -1.1 | 216 | 0.11 | 6.2[a] |
| Oxygen | 0.24[b] | +0.42 | -0.12 | +3.2 | -0.1 | 199 | 0 | 0.18 |
| Carbon dioxide | 0.14[b] | +1.92 | -1.34 | +1.2 | -1.8 | <216 | 0.07 | 0.21 |
| Carbon monoxide | NA | +3.91 | -6.56 | +4.2 | -5.6 | <216 | 0.19 | 3.07[a] |
| Flow rate | 11.6[c] | NA | NA | NA | NA | NA | NA | NA |
| Moisture | 15.6[d] | NA | NA | NA | NA | NA | NA | NA |

[a]Exceeded expected performance criterion.

[b]Results in terms of percent $O_2$ ($CO_2$) instead of percent of full scale.

[c]Relative accuracy of transducer readings and Reference Method 2 derived flow rates.

[d]Relative accuracy of calculated moisture and Reference Method 4 measured moisture.

Monitor drift measured during each test period is summarized in Table 27. Results from drift checks indicated that the $NO_x$ instruments exceeded the expected performance criteria during five test periods. However, during the span checks calibration gas was delivered directly to the $NO_x$ instruments bypassing the sample probe and line. This caused calibration gas to be delivered to the instrument at a higher pressure than during sampling and 24 hour drift checks causing a higher response from the instrument. Therefore, drift determination based on test span periods are not considered valid. Results from 24 hour drift checks indicate that with the exception of the outlet $NO_x$ instrument all analyzers conformed to the stated criteria.

Response Time--

Monitor response time was reported as the slower of the average of three sets of upscale and downscale determinations. The upscale determination is the time it takes the monitor to respond from a zero calibration gas reading to a stable stack effluent reading. Conversely, the downscale determination is the time it takes the monitor to respond from a high-level calibration gas concentration to a stable stack effluent reading. The upscale and downscale response time means are determined, with the slower value reported.

Further documentation on the response time tests is provided in Appendix E.

Precision Limits--

Precision limit calculations were performed using data generated from daily precision checks of the monitors. These estimates were determined using the protocol delineated in 40 CFR Part 60 Draft Appendix F Quality Assurance Procedures dated November 19, 1981.

Using the data generated during the daily zero span checks as the basic data inputs, the upper and lower probability estimates for the zero and high span levels were calculated according to the following equations:

$$d_i = \frac{Y_i - X_i}{X_i} \times 100$$

where

$Y_i$ = Monitor indicated concentration from the i-th precision check

$X_i$ = The precision check reference concentration used for the i-th precision check.

Periodic average percent difference, $\bar{d}_j$, is calculated as follows:

$$\bar{d}_j = \frac{1}{n} \sum_{i=1}^{n}$$

TABLE 27. MONITOR DRIFT CHECK DURING TEST PERIODS

| Test condition | Duct burner inlet | | | Duct burner outlet | | |
|---|---|---|---|---|---|---|
| | $NO_x$ zero, span % | $O_2$ zero, span % | $CO_2$ zero, span % | $NO_x$ zero, span % | $O_2$ zero, span % | $CO_2$ zero, span % |
| 1 | 0.6, 0.2 | 0.3, 0.6 | 0.2, 3.5 | 2.2, 3.0 | 0, 0.3 | 0.3, 0.6 |
| 2 | 2.0, 2.0 | 0, 0 | 0.2, 2.7 | 5.2, 28.2[a] | 0, 0.6[a] | 0.3, 0.9 |
| 3 | 0.2, 0.4 | 0, 0.3 | 0.5, 4.5 | 0.2, 1.6 | 0.3, 0.3 | 0, 0.9 |
| 3 | 1.2, 13.4[a] | 0, 0 | 0, 1.5 | 1.0, 15.8[a] | 0, 0 | 0, 0.3 |
| 4 | 1.0, 4.2 | 0.3, 0.9 | 0.2, 1.9 | 2.6, 5.8[a] | 0.3, 0.6 | 0, 0.9 |
| 5 | 0.8, 0.2 | 0, 0 | 0, 1.2 | 2.8, 24.2[a] | 0.3, 0 | 0, 0.6 |

[a]Exceeded expected performance criterion.

where

n = number of valid precision checks made during the period j.

The standard deviation of the percent difference ($S_j$) is calculated as follows:

$$S_j = \sqrt{\frac{1}{n-1}\left[\sum d_i^{\,2} - \frac{1}{n}\left(\sum_{i=1}^{n} d_i\right)^2\right]}$$

Upper and lower probability limits (UPL and LPL) at the 95 percent confidence limit were calculated according to the following equations:

$$UPL = \bar{d}_j + 1.96\ S_j$$

$$LPL = \bar{d}_j - 1.96\ S_j$$

Precision limits for the daily zero check were calculated using the same equations, except that $x_i$ in the denominator of the first equation is assigned the value of the instrument full scale operating range.

Calibration Gas Traceability--

All calibration gases utilized during this test program were obtained from Airco Industrial Gases with an analytical certification of concentration (NBS traceable). Analytical reports provided by the manufacturer are given in Appendix I.

## Reference Methods

During the program measurements were conducted utilizing EPA Reference Methods 1, 2, 3, 4 and 7. These manual sampling methods were used to generate data to validate the precision and accuracy of the data from the continuous monitors. These measurements were conducted in accordance to the procedures outlined in the reference methods.

EPA Methods 1 and 2--

A traverse was conducted at the outlet sampling location to provide data for a temperature and velocity profile. Based on velocity traverse data, the CEM probe was positioned at a point of average velocity. A traverse at the inlet location was not conducted because of the high temperature and turbulence of this sampling location.

Tables 24 and 25 report the relative accuracy of calculated theoretical flow rates and measured flow rates.

EPA Method 3--

Sampling and analyses for carbon dioxide and oxygen was conducted in accordance to the procedures outlined in the reference method. Quality control checks performed for this method include the following:

- use of fresh Orsat reagents
- analyses of ambient air
- leak checks of the sampling system and Orsat analyzers
- recording data on standardized forms.

EPA Method 4--

Moisture determinations utilizing Method 4 were conducted during each test condition at both sampling locations. Calibrations for the dry gas meter are presented in Appendix C.

Tables 25 and 26 include the relative accuracy of calculated theoretical moisture and measured moisture.

EPA Method 7--

Sampling for $NO_x$ was performed according to EPA Method 7. Calibrations of the flasks used are provided in Appendix G. All samples collected were labeled and accounted for on a sample packing list. This list accompanied the samples submitted to the GCA sample bank prior to analysis. Proper sample chain of custody was maintained.

Method 7 analysis was performed in the GCA laboratory. After analysis it was found that 6 of 54 $NO_x$ samples provided questionable values. It is suspected that the sample flask may have leaked or the sample may not have been collected properly and these values were deleted from the Relative Accuracy calculations. Field data, laboratory results, reduced results, and relative accuracy calculations are included in Appendix G.

DATA VALIDATION

Sample data validation was accomplished according to procedures outlined in the reference methods and through independent calculations of emission rates.

Calculated $NO_x$ emission rates on a lb/hr basis derived from flow rate measurements were validated with emission rates determined by F-factor calculations and measured fuel input. The dilution factors used in the F-factor calculation were verified using measured $O_2$ and $CO_2$ values.

Measured $O_2$ and $CO_2$ were verified utilizing the fuel factor, $F_o$. $F_o$ values determined from measured $O_2$ and $CO_2$ values were compared to $F_o$ values calculated from fuel analyses. $F_o$ values were derived from the average fuel analysis with the equation:

$$F_o = \frac{0.209\ F_d}{F_c}$$

where

$$F_d = \frac{3.64(\%H) + 1.53(\%C) + 0.57(\%S) + 0.14(\%N) - 0.46(\%O_2)}{GCV} \times 10^6$$

$$F_c = \frac{0.321(\%C)}{GCV} \times 10^6$$

$F_o$ values were determined from measured $O_2$ and $CO_2$ concentrations with the equation:

$$F_o = \frac{20.9 - \%\ O_2\ dry}{\%\ CO_2\ dry}$$

Trend plots of calculated $F_o$ values are included in Appendix J.

DEVIATIONS FROM THE QUALITY ASSURANCE PLAN

The following deviations from the original quality assurance test plan occurred.

- Method 25A was deleted as a requirement at the beginning of the test program.
- Eight turbine test conditions were tested instead of the originally scheduled ten conditions. The 110 percent of full load and oil-fired conditions were deleted.
- Ambient air was used in place of a standard gas cylinder for verifying Orsat performance.

## REFERENCES


1. Federal Register, October 6, 1983, Standards of Performance for New Stationary Sources; Stationary Gas Turbines, Advance Notice of Proposed Rulemaking, 40 CFR Part 60.

2. Emission Test Request to Support Standards of Performance for Stationary Gas Turbines, Radian Corporation, Durham, North Carolina, September 28, 1983.

3. Test Plan and Quality Assurance Plan for Gas Turbine Method Development and Testing: Crown Zellerbach Turbine/Duct Burner Testing, GCA/Technology Division, Bedford, Massachusetts.

# APPENDIX A

# RESULTS AND CALCULATION PROCEDURES

## INTRODUCTION

Emission test results are presented and calculation procedures are outlined in this appendix. Included in the appendix is a discussion of data reduction, a summary of test data based on hourly averages, a hand validation of the data reduction program and a summary of $NO_x$ emissions calculated using $F_D$, $F_C$ and mass flow techniques. Calculations for process and emission calculations are presented in the following section. Summaries of the emission data and data reduction validation are shown in the tables and the included calculation sheets.

## DATA REDUCTION

The data reduction methods are based on the requirements of the test program and calculations contained in 40 CFR 60, Appendix A Methods. All monitoring data, process data and calibrations were stored on computer, and catalogued according to date and time for each parameter.

Data were reduced and validated using the appropriate calibrations and the emission calculation procedures outlined below. Measured and calculated emission values were reported for both continuous monitoring and test conditions on the duct burner.

### Process and Emission Calculations

A computerized data reduction system and manual calculation techniques were used to process the reference method and continuous monitoring test data. Process operating data, including operating temperatures and pressures, gas and steam injection flow rates, and steam production were keypunched onto computer cards. Other process parameters included were natural gas heating value and ultimate analysis, as well as ambient temperature and humidity. Monitored emissions data input into the program included inlet and outlet $NO_x$, CO, $CO_2$, $O_2$, velocity, temperature, and moisture.

To interpret the effect of the duct burner on gas turbine emissions in the cogeneration power plant, measured gas turbine emissions were subtracted from the total system emissions to calculate the contribution from the duct burner. $NO_x$ emissions were calculated on a ppm dry, lb/MBtu, and lb/hr basis for duct burner inlet and outlet emissions based on measured emission concentrations, mass flow measurements, and fuel analyses. Calculation procedures are outlined in the following paragraphs.

$NO_x$ emissions were measured on a wet basis to eliminate $NO_2$ absorption in condensed moisture. Measured wet $NO_x$ was converted to a dry basis with the following equation:

$$NO_{x\ ppmvd} = \frac{1}{1-Bws} NO_{x\ ppmvw}$$

where

$NO_{x\ ppmvd}$ = measured $NO_x$ corrected to a dry basis (ppm dry)

$NO_{x\ ppmvw}$ = measured $NO_x$ on a wet basis (ppm wet)

Bws = fraction of moisture in flue gas (percent).

$NO_{x\ ppmvw}$ was continually monitored with the $NO_x$ analyzers. Bws for the moisture correction was determined based on measured steam injection rates, ambient humidity, and combustion chemistry. Calculated Bws was verified with Reference Method 4 moisture determinations conducted at each duct burner test condition. Bws was calculated based on a ratio of moles of dry flue gas per mole of wet flue gas with the following equations:

$$Bws_{theoretical} = 1 - \frac{n_{FG}\ dry/lb\ fuel}{n_{FG}\ wet/lb\ fuel}$$

where

$\frac{n_{FG\ dry}}{lb\ fuel}$ = moles of flue gas dry per lb of fuel for both gas turbine and duct burner

$$\frac{n_{FG\ dry}}{lb\ fuel} = \frac{\%C}{252.2} + \frac{\%H}{106.3} + \frac{\%S}{672.0} - \frac{\%O_2}{850.6} + \frac{\%N}{280.2} \quad \frac{20.9}{20.9-O_2}$$

$\frac{n_{FG\ wet}}{lb\ fuel}$ = moles of flue gas wet per lb of fuel

For the gas turbine

$$\frac{n_{FG\ wet}}{lb\ fuel} = \frac{n_{FG}\ dry}{lb\ fuel} + \frac{n_{steam\ inj.}}{lb\ fuel} + \frac{n_{comb\ moist}}{lb\ fuel} + \frac{n_{humidity}}{lb\ fuel}$$

For the duct burner

$$\frac{n_{FG\ wet}}{lb\ fuel} = \frac{n_{FG}\ dry}{lb\ fuel} + \frac{n_{comb\ moist}}{lb\ fuel} + \left(\frac{M_{GT}}{M_{GT} + M_{DB}}\right) \frac{n_{steam\ inj.}}{lb\ fuel} + \frac{n_{humidity}}{lb\ fuel}$$

$M_{GT}$ = Gas turbine fuel flow, (scfm)

$M_{DG}$ = Duct burner fuel flow, (scfm)

For both gas turbine and duct burner

$$\frac{n_{\text{steam inj.}}}{\text{lb fuel}} = W \frac{\text{lb steam/sec}}{\text{lb fuel/sec}} \times \frac{\text{18 mole steam}}{\text{lb steam}}$$

$$\frac{n_{\text{comb moist.}}}{\text{lb fuel}} = \%H/200$$

$$\frac{n_{\text{humidity}}}{\text{lb fuel}} = H \frac{\text{grains } H_2O}{\text{lb dry air}} \frac{1.429 \times 10^{-4} \text{ lb}}{\text{grain}} \frac{29 \dfrac{\text{lb air}}{\text{lb mole air}}}{18 \dfrac{\text{lb } H_2O}{\text{lb mole } H_2O}}$$

$$\frac{\text{lb mole air}}{0.209 \text{ lb mole } O_2} \frac{\text{moles } O_2}{\text{lb fuel}} \frac{20.9}{20.9-O_2}$$

$NO_x$ emission rates were converted from the measured concentration on a dry basis to ppmvd at 15 percent $O_2$ at ISO conditions, lb/hr based on measured mass flow rate, and lb/MBtu and lb/hr based on the F-factor method. $NO_x$ on a dry basis at 15 percent $O_2$ at ISO conditions is calculated for gas turbine emissions with the following equation:

$$NO_{x_{ISO}} = NO_{x_{obs}} \left(\frac{Pamb}{P_{ISO}}\right)^{0.5} e^{19(Hobs-0.00633)} \left(\frac{288°K}{Tamb}\right)^{1.53}$$

where:

$NO_{x_{ISO}}$ = $NO_x$ corrected to ISO conditions (ppm @ ISO)

$NO_{x_{obs}}$ = Measured $NO_x$ corrected to 15% $O_2$ (ppm day)

$P_{amb}$ = observed local ambient pressure (in Hg)

$P_{ISO}$ = standard pressure for ISO correction 29.92 in Hg

e = 2.718

Hobs = observed humidity (grains/lb dry air)

Tamb = temperature of ambient air (°K)

$NO_x$ on a lb/hr basis calculated from measured mass flow rate were derived with the following equation:

$$ENO_x = NO_{x\ ppmvd} \times \frac{46.0 \text{ lb mole}^{-1} NO_2}{385.3 \times 10^6 \text{ ft}^3 \text{ mole}^{-1} \text{ ppm}} \times QS \text{ dscfm} \times 60 \text{ min/hr}$$

where

$E_{NO_x}$ = $NO_x$ mass emission rate from gasturbine or system (lb/hr)

$NO_{x\ ppmvd}$ = Measured $NO_x$ on a dry basis (ppmvd)

QS = Measured mass flow rate (dscfm)

QS from the duct burner is calculated from the molecular weight of the stack gas, stack moisture, and velocity with the following equations:

$$QS_{DB} = 3600\ (1-B_{ws})\ (A)\ (Vs)\ \left(\frac{T_{std}}{T_{sta}}\right) \times \left(\frac{P_{sta}}{P_{std}}\right)$$

where

$A = \frac{\pi D^2}{4}$ = stack area ($ft^2$)

$$V_s = (85.49)\ (Cp)\ (\Delta p)^{1/2}\ avg \left[\frac{(T_{sta})\ avg}{P_{sta}\ MW_{sta}}\right]^{1/2} (ft/sec)$$

Cp = Pitot correction factor (dimensionless)

$\Delta p$ = Velocity Pressure (in. $H_2O$)

$T_{sta}$ = Stack temperature (°R)

$P_{sta}$ = Stack pressure (in. Hg)

$MW_{sta} = MW_{dry}\ (1 - B_{ws}) + 18.0\ (B_{ws})$ (lb/lb mole)

$MW_{dry} = 0.32\ (\%O_2) + 0.44\ (\%CO_2) + 0.28\ (\%N_2 + \%CO)$ (lb/lb mole)

$T_{stat}$ = 528 (°F)

$P_{stat}$ = 29.92 (in Hg)

QS from the gas turbine was derived from measured outlet flow rates and duct burner fuel flow rates. Gas turbine flow rate was calculated with the equation:

$$QS_{GT} = QS_{DB} + (QS_C \times M_{DB})$$

where

$QS_{GT}$ = Gas turbine exhaust flow rate (dscfm) @ 68°F and 29.92 in Hg

$QS_{DB}$ = Duct burner (stack) flow rate (dscfm) @ 68°F and 29.92 in Hg

$QS_C$ = Correction coefficient based on fuel analysis and combustion chemistry (dscfm exhaust gas/scfm fuel)

$M_{DB}$ = Duct burner fuel flow rate (scfm) @ 60°F and 29.92 in Hg

The correction coefficient above was calculated by determining the volume of $O_2$ consumed and $CO_2$ generated on a dry basis per standard cubic foot of gas (scf fuel) based on the natural gas fuel analysis. Therefore:

$$QS_C = \Delta O_2 + \Delta CO_2$$

where: $\Delta O_2$ = $O_2$ consumed across duct burner

$\Delta CO_2$ = $CO_2$ generated across duct burner

$\Delta O_2$ is determined from combustion stoiciometry and fuel analysis from the following equations for carbon and hydrogen in the fuel:

$$\Delta O_{2_C} = \frac{\%C}{100} \times \frac{1}{MW_C} \times \frac{1 \text{ mole } O_2}{\text{mole C}} \times 385.3 \frac{\text{DSCF } O_2}{\text{mole } O_2} \times \text{nat'l gas}$$

$$\Delta O_{2_H} = \frac{\%C}{100} \times \frac{1}{MW_H} \times \frac{\text{mole } O_2}{2 \text{ mole } H_2} \times 385.3 \frac{\text{DSCF } O_2}{\text{mole } O_2} \times P \text{ nat'l gas}$$

where:

C = weight percentage of carbon in fuel (lb C/lb fuel)

%H = weight percentage of hydrogen in fuel (lb H/lb fuel)

$MW_C$ = molecular weight of carbon, 12.01 lb/lb mole

$MCO_H$ = molecular weight of hydrogen, 2 lb/lb mole

385.3 = molar volume, DSCF/mole at 68°F and 29.92 in Hg

$\rho$ = density of natural gas, lb/ft$^3$ @ 60°F 14.7 psia

Because one mole of $CO_2$ is generated for each mole of oxygen and carbon ($C + O_2 \quad \Delta CO_2$), $\Delta CO_2$ across the duct burner is equal to $\Delta O_2 C$.

$NO_x$ emission rates on a lb/MBtu and lb/hr basis were calculated using the F-factor method shown below.

$$NO_x = 1.194 \times 10^{-7} \frac{\text{lb } NO_x}{\text{ft}^3\text{-ppm}} \times NO_{x\ ppmvd} \times F \times \frac{20.9}{20.9-O_2}$$

where

$NO_x$ = $NO_x$ mass emission rate (lb/MBtu)

$NO_{x\ ppmvd}$ = Measured $NO_x$ on a dry basis (ppmvd)

$F$ = F - factor ($F_D$ or $F_C$) $\frac{DSCF}{MBtu}$

$O_2$ = Measured $O_2$ on a dry basis (percent)

$$EFNO_x = NO_x \text{ lb/MBtu} \times M \text{ lb/hr} \times HHV \frac{MBtu}{lb}$$

where

$EFNO_x$ = $NO_x$ mass emission rate from gas turbine system based on F-factor calculations (lb/hr)

$NO_x$ lb/mBtu = $NO_x$ mass emission rate (lb/mBtu)

M = Fuel flow rate (lb/hr)

HHV = Heating value of fuel (MBtu/lb)

To determine the effect of the duct burner emissions, $NO_x$ generated or destroyed by the duct burner is determined by the difference of the inlet and outlet mass emission rates:

$$ENO_{x_{DB}} = ENO_{x_{SYS}} - ENO_{x_{GT}}$$

where

$ENO_{x_{DB}}$ = $NO_x$ emission rate from duct burner (lb/hr)

$ENO_{x_{SYS}}$ = $NO_x$ emission rate from cogeneration system (lb/hr)

$ENO_{x_{GT}}$ = $NO_x$ emission rate from gas turbine (lb/hr)

Measured carbon monoxide concentrations were corrected for $CO_2$ interference utilizing a correction factor determined by measuring CO instrument response at known $CO_2$ concentrations. Interference was measured at four $CO_2$ concentrations. The interference curve is shown in Figure A-1. Because measured $CO_2$ concentrations averaged around 3.5 percent, interference response was linearized for concentrations less than 4 percent (see Figure A-1). Carbon monoxide concentrations were corrected with the following equation:

$$CO_{corr} = CO_{meas} - (2.97 \times CO_2)$$

where

$CO_{corr}$ = corrected carbon monoxide (ppm)

$CO_{meas}$ = measured carbon monoxide (ppm)

2.97 = slope of interference curve

$CO_2$ = measured $CO_2$

Data Reporting

Data manipulations were performed using the GCA time-shared computer in conjunction with the Statistical Analysis System (SAS). The total emissions data base was keypunched verified and stored on disk for access by the time-share computer.

The total data reduction process is shown in Figure A-2. Essentially, all program data were sorted and merged by day and time. Steam and fuel flows were derived from integration readings taken from the Crown Zellerbach control room. Concentrations, flow rates, emission rates and other important parameters were then calculated on a quarterly and hourly basis for the entire project. Additional calculations were conducted on the test condition intervals using data obtained from EPA Reference Methods 2 and 4. From these, quarterly and hourly reports were generated for test conditions one through eight. Other data manipulations included summarizing the remainder of the CEM data into additional test conditions based on hourly average process parameters, a quarterly $NO_x$ summary, and trend plots used to verify data input and results.

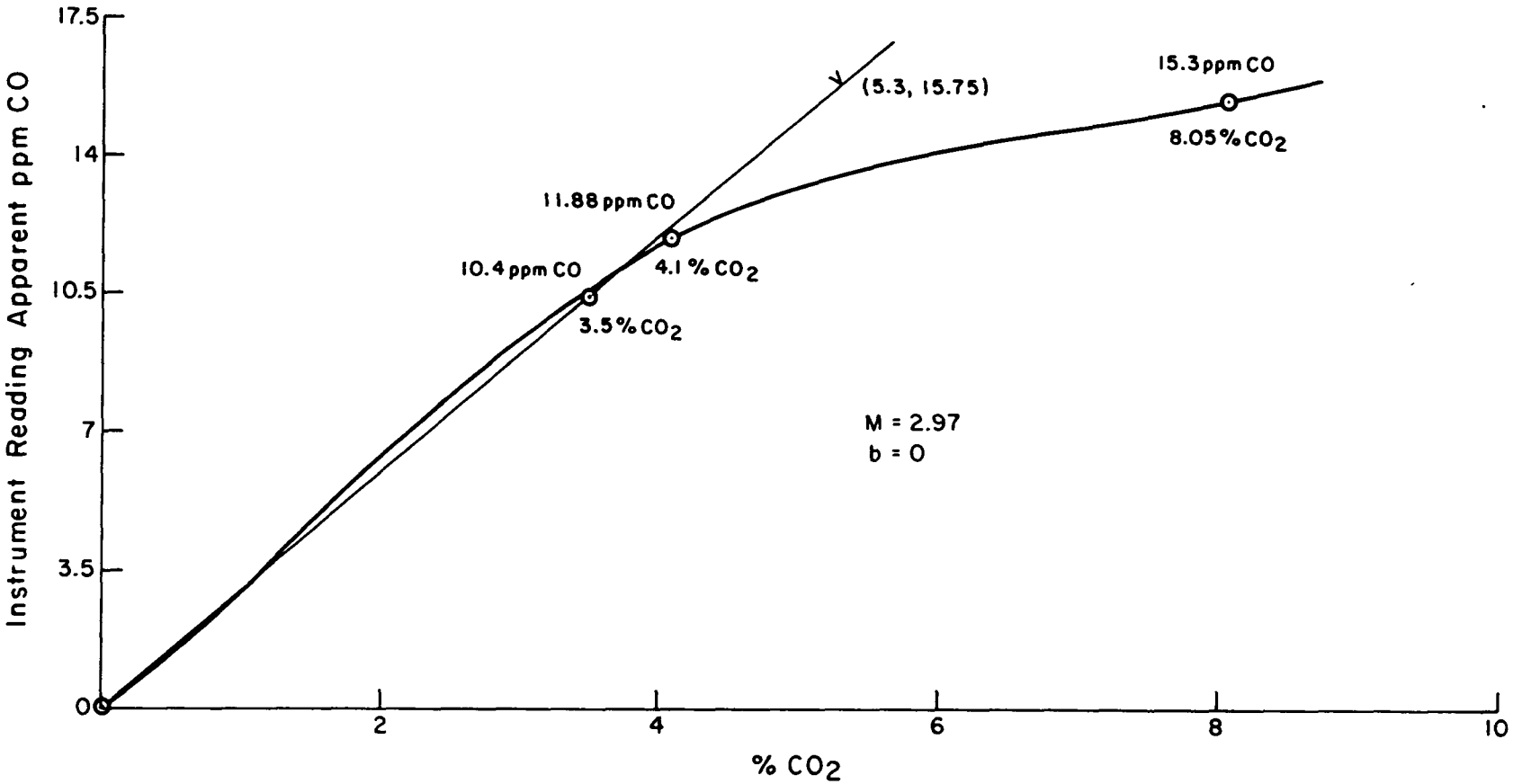


Figure A-1. $CO_2$ gas concentration interference vs. CO instrument reading.

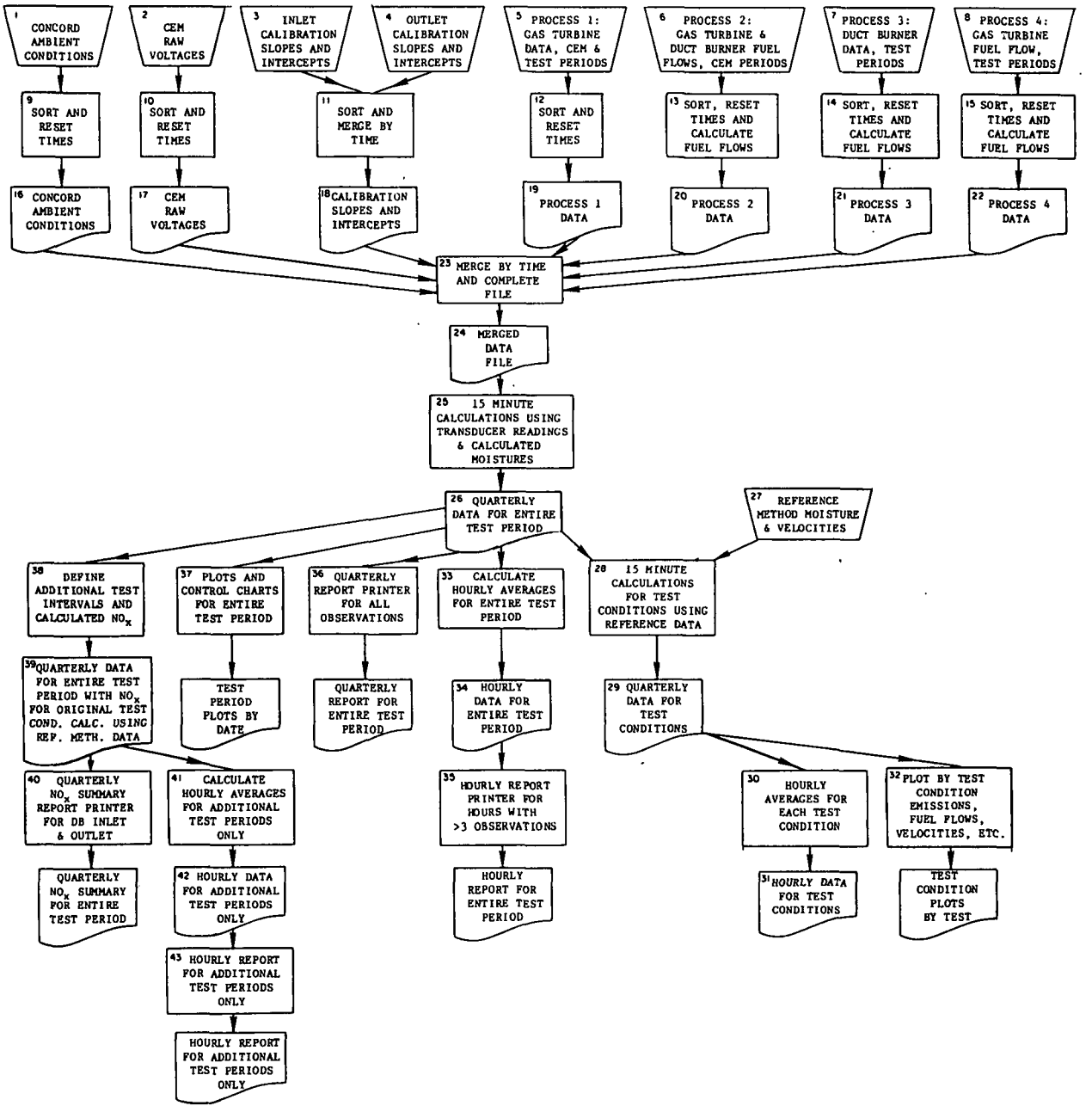


Figure A-2. Crown Zellerbach data reduction.

GCA/TECHNOLOGY DIVISION

CROWN ZELLERBACH DUCT BURNER CEM DATA
HOURLY AVERAGES

| DAY | HR | GAS TURBINE FUEL FLOW SCFM | GAS TURBINE STEAM INJ. RATIO | DUCT BURNER FUEL FLOW SCFM | DUCT BURNER INLET H2O % | DUCT BURNER INLET QS DSCFM x10^3 | DUCT BURNER INLET O2 % DRY | DUCT BURNER INLET CO2 % DRY | DUCT BURNER INLET CO PPM DRY | DUCT BURNER INLET NOX PPM DRY | DUCT BURNER INLET NOX PPM ISO | DUCT BURNER INLET NOX LB/MBTU | DUCT BURNER INLET NOX LB/HR | DUCT BURNER OUTLET H2O % | DUCT BURNER OUTLET QS DSCFM x10^3 | DUCT BURNER OUTLET O2 % DRY | DUCT BURNER OUTLET CO2 % DRY | DUCT BURNER OUTLET CO PPM DRY | DUCT BURNER OUTLET NOX PPM DRY | DUCT BURNER OUTLET NOX LB/MBTU | DUCT BURNER OUTLET NOX LB/HR | CHANGE ACROSS DB LB/HR |
|---|---|---|---|---|---|---|---|---|---|---|---|---|---|---|---|---|---|---|---|---|---|---|
| 15 | 18 | 3126 | 0.72 | 1784 | 5.9 | 192.2 | 17.3 | 1.98 | 25 | 28 | 46 | 0.157 | 38.4 | 8.5 | 190.4 | 14.7 | 3.32 | 26 | 40 | 0.133 | 55.1 | 16.7 |
| 15 | 19 | 3358 | 0.00 | 2293 | 4.8 | 178.5 | 17.2 | 1.93 | 25 | 28 | 46 | 0.155 | 35.4 | 7.4 | 176.2 | 14.5 | 3.43 | 26 | 41 | 0.133 | 52.0 | 16.6 |
| 15 | 20 | 3370 | 0.00 | 2270 | 4.8 | 163.5 | 17.2 | 1.97 | 24 | 28 | 45 | 0.154 | 32.4 | 7.4 | 161.2 | 14.5 | 3.43 | 26 | 40 | 0.129 | 46.3 | 13.9 |
| 15 | 21 | 3417 | 0.00 | 2232 | 4.8 | 117.4 | 17.1 | 1.91 | 22 | 29 | 46 | 0.159 | 24.5 | 7.4 | 115.1 | 14.5 | 3.47 | 25 | 42 | 0.133 | 34.4 | 9.9 |
| 15 | 22 | 3457 | 0.00 | 2260 | 4.8 | 96.6 | 17.1 | 2.01 | 20 | 29 | 46 | 0.157 | 19.9 | 7.4 | 94.3 | 14.5 | 3.46 | 24 | 41 | 0.130 | 27.6 | 7.6 |
| 15 | 23 | 3477 | 0.47 | 2103 | CEM OFFLINE | | | | | | | | | | | | | | | | | |
| 16 | 0 | 3707 | 0.93 | 1944 | 6.6 | 169.7 | 16.8 | 2.17 | 14 | 35 | 52 | 0.177 | 42.7 | 9.0 | 167.8 | 14.6 | 3.43 | 24 | 46 | 0.148 | 55.5 | 12.8 |
| 16 | 1 | 3581 | 0.94 | 1828 | 6.8 | 191.3 | 16.8 | 2.19 | 14 | 35 | 51 | 0.177 | 48.1 | 8.9 | 189.4 | 14.6 | 3.37 | 24 | 45 | 0.146 | 61.1 | 13.1 |
| 16 | 2 | 3654 | 0.92 | 1769 | 6.9 | 186.7 | 16.8 | 2.21 | 13 | 36 | 52 | 0.179 | 48.0 | 8.9 | 185.0 | 14.6 | 3.35 | 24 | 46 | 0.150 | 61.0 | 13.1 |
| 16 | 3 | 3615 | 0.94 | 1825 | 6.8 | 166.5 | 16.9 | 2.20 | 14 | 35 | 52 | 0.179 | 42.4 | 9.0 | 166.7 | 14.6 | 3.36 | 24 | 45 | 0.147 | 54.0 | 11.6 |
| 16 | 4 | 3408 | 0.94 | 1750 | 6.7 | 211.1 | 16.9 | 2.19 | 14 | 35 | 52 | 0.179 | 53.1 | 9.0 | 209.3 | 14.6 | 3.38 | 24 | 44 | 0.143 | 66.3 | 13.3 |
| 16 | 5 | 3555 | 0.93 | 1954 | 6.7 | 208.3 | 16.9 | 2.21 | 14 | 35 | 52 | 0.179 | 52.5 | 9.0 | 206.3 | 14.6 | 3.38 | 24 | 45 | 0.145 | 66.4 | 13.9 |
| 16 | 6 | 7169 | 0.90 | 956 | 6.7 | 256.4 | 15.4 | 3.15 | 6 | 45 | 45 | 0.170 | 83.3 | 10.3 | 255.4 | 13.9 | 3.67 | 23 | 51 | 0.149 | 93.2 | 9.9 |
| 16 | 7 | 7506 | 0.94 | 956 | 9.6 | 249.9 | 14.6 | 3.60 | 2 | 41 | 38 | 0.132 | 72.8 | 10.6 | 249.0 | 13.5 | 4.11 | 22 | 45 | 0.126 | 60.8 | 8.0 |
| 16 | 8 | 7593 | 0.95 | 970 | 9.8 | 232.1 | 14.6 | 3.59 | 2 | 39 | 37 | 0.128 | 65.5 | 10.5 | 231.1 | 13.5 | 4.10 | 22 | 43 | 0.119 | 71.2 | 5.7 |
| 16 | 9 | 7156 | 0.95 | 1317 | 9.6 | 230.7 | 14.6 | 3.58 | 2 | 39 | 37 | 0.127 | 64.6 | 10.8 | 229.6 | 13.5 | 4.09 | 22 | 43 | 0.119 | 70.7 | 6.1 |
| 16 | 10 | 6616 | 0.67 | 2325 | CEM OFFLINE | | | | | | | | | | | | | | | | | |
| 16 | 11 | 6675 | 0.76 | 1510 | 7.9 | 225.8 | 15.7 | 2.91 | 6 | 37 | 41 | 0.145 | 59.6 | 10.2 | 224.0 | 13.4 | 4.13 | 21 | 42 | 0.115 | 67.3 | 7.6 |
| 16 | 12 | 7373 | 0.93 | 781 | 9.3 | 208.3 | 14.8 | 3.31 | 4 | 40 | 37 | 0.132 | 59.1 | 10.5 | 207.5 | 13.6 | 3.95 | 17 | 41 | 0.115 | 60.7 | 1.5 |
| 16 | 13 | 7362 | 0.94 | 562 | CEM OFFLINE | | | | | | | | | | | | | | | | | |
| 16 | 14 | 7325 | 0.97 | 569 | CEM OFFLINE | | | | | | | | | | | | | | | | | |
| 16 | 15 | 7268 | 0.94 | 569 | CEM OFFLINE | | | | | | | | | | | | | | | | | |
| 16 | 16 | 7293 | 0.94 | 569 | CEM OFFLINE | | | | | | | | | | | | | | | | | |
| 16 | 17 | 7407 | 0.96 | 657 | 9.5 | 204.7 | 14.7 | 3.32 | 1 | 42 | 38 | 0.139 | 61.4 | 10.6 | 204.0 | 13.7 | 3.90 | 15 | 42 | 0.119 | 61.0 | -0.4 |
| 16 | 18 | 7417 | 0.95 | 652 | 9.6 | 187.0 | 14.7 | 3.37 | 1 | 40 | 36 | 0.135 | 54.0 | 10.6 | 186.4 | 13.7 | 3.91 | 15 | 42 | 0.119 | 55.5 | 1.5 |
| 16 | 19 | 7422 | 0.95 | 654 | 9.6 | 205.3 | 14.7 | 3.38 | 1 | 39 | 37 | 0.131 | 57.9 | 10.7 | 204.6 | 13.7 | 3.92 | 16 | 41 | 0.117 | 60.2 | 2.3 |
| 16 | 20 | 7451 | 0.95 | 701 | 9.4 | 193.4 | 14.8 | 3.40 | 1 | 39 | 37 | 0.130 | 53.4 | 10.7 | 192.8 | 13.7 | 3.92 | 15 | 41 | 0.118 | 57.2 | 3.7 |
| 16 | 21 | 7593 | 0.93 | 1435 | 9.5 | 195.1 | 14.8 | 3.37 | 0 | 40 | 38 | 0.135 | 55.6 | 11.3 | 191.7 | 13.0 | 4.34 | 16 | 44 | 0.113 | 50.0 | 4.4 |
| 16 | 22 | 6525 | 0.95 | 1597 | 9.6 | 192.9 | 14.8 | 3.41 | 0 | 41 | 39 | 0.136 | 56.3 | 11.2 | 191.3 | 13.0 | 4.36 | 17 | 45 | 0.117 | 51.9 | 5.5 |
| 16 | 23 | 3508 | 0.80 | 2352 | 6.3 | 147.1 | 17.0 | 2.09 | 70 | 19 | 29 | 0.100 | 20.5 | 9.3 | 144.7 | 14.0 | 3.68 | 45 | 24 | 0.072 | 25.7 | 5.2 |
| 17 | 0 | 3500 | 0.77 | 2276 | 6.1 | 122.6 | 17.1 | 2.03 | 85 | 18 | 27 | 0.095 | 15.4 | 9.3 | 120.3 | 13.9 | 3.70 | 50 | 22 | 0.064 | 18.6 | 3.1 |
| 17 | 1 | 4750 | 0.67 | 2098 | 6.6 | 131.5 | 16.4 | 2.43 | 28 | 28 | 37 | 0.128 | 26.8 | 9.6 | 129.4 | 13.7 | 3.90 | 26 | 30 | 0.095 | 28.3 | 1.5 |
| 17 | 2 | 3825 | 0.70 | 2278 | 6.5 | 116.3 | 16.7 | 2.27 | 34 | 23 | 32 | 0.113 | 19.4 | 9.4 | 114.0 | 13.6 | 3.65 | 25 | 23 | 0.080 | 22.6 | 3.5 |
| 17 | 3 | 3808 | 0.70 | 2310 | 6.4 | 79.9 | 16.8 | 2.21 | 42 | 22 | 31 | 0.109 | 12.3 | 9.4 | 77.6 | 13.8 | 3.63 | 28 | 25 | 0.072 | 13.8 | 1.4 |
| 17 | 4 | 3608 | 0.74 | 2329 | 6.4 | 96.5 | 16.9 | 2.20 | 45 | 21 | 30 | 0.105 | 14.3 | 9.4 | 94.1 | 13.8 | 3.83 | 30 | 26 | 0.074 | 17.2 | 2.9 |
| 17 | 5 | 4075 | 0.71 | 2269 | 6.4 | 116.0 | 16.8 | 2.23 | 43 | 21 | 31 | 0.108 | 17.5 | 9.4 | 113.7 | 13.6 | 3.55 | 29 | 26 | 0.075 | 21.3 | 3.4 |
| 17 | 6 | 7366 | 0.47 | 1169 | 7.7 | 165.4 | 15.3 | 3.14 | 6 | 37 | 40 | 0.137 | 45.5 | 9.6 | 164.2 | 13.4 | 4.12 | 16 | 39 | 0.107 | 46.8 | 1.3 |
| 17 | 7 | 7600 | 0.97 | 1090 | 9.6 | 164.5 | 14.8 | 3.44 | 1 | 40 | 38 | 0.133 | 46.7 | 11.2 | 163.4 | 13.3 | 4.16 | 15 | 41 | 0.111 | 48.5 | 1.8 |
| 17 | 8 | 7515 | 0.95 | 893 | CEM OFFLINE | | | | | | | | | | | | | | | | | |
| 17 | 9 | 7487 | 0.94 | 27 | CEM OFFLINE | | | | | | | | | | | | | | | | | |
| 17 | 10 | 7258 | 0.65 | 744 | 5.0 | 240.4 | 14.9 | 3.34 | 2 | 62 | 57 | 0.214 | 108 | 9.0 | 239.7 | 13.9 | 3.83 | 12 | 67 | 0.158 | 116 | 8.2 |
| 17 | 11 | 7158 | 0.36 | 660 | 7.0 | 236.2 | 15.1 | 3.35 | 1 | 113 | 102 | 0.396 | 189 | 7.9 | 235.6 | 14.1 | 3.72 | 10 | 114 | 0.343 | 193 | 4.2 |
| 17 | 12 | 6632 | 0.60 | 727 | 7.5 | 197.8 | 15.1 | 3.35 | 1 | 81 | 73 | 0.285 | 69.9 | 8.4 | 197.0 | 14.2 | 3.65 | 10 | 85 | 0.258 | 76.5 | 6.6 |
| 17 | 13 | 6632 | 0.67 | 747 | 7.0 | 200.7 | 15.7 | 2.99 | 3 | 40 | 40 | 0.156 | 57.3 | 8.2 | 200.0 | 14.5 | 3.41 | 12 | 42 | 0.135 | 60.4 | 3.0 |

. REPRESENTS MISSING DATA

AVERAGE DUCT BURNER INLET TEMP=1058 F
AVERAGE DUCT BURNER OUTLET TEMP=301 F

GCA/TECHNOLOGY DIVISION

CROWN ZELLERBACH DUCT BURNER CEM DATA
HOURLY AVERAGES

| | | GAS TURBINE | | DUCT BURNER | DUCT BURNER INLET | | | | | | | | | DUCT BURNER OUTLET | | | | | | | | CHANGE |
|---|---|---|---|---|---|---|---|---|---|---|---|---|---|---|---|---|---|---|---|---|---|---|
| DAY | HR | FUEL FLOW SCFM | STEAM INJ. RATIO | FUEL FLOW SCFM | H2O % | QS DSCFM X10^3 | O2 % DRY | CO2 % DRY | CO PPM DRY | NOX PPM DRY | NOX PPM ISO | NOX LB/MBTU | NOX LB/HR | H2O % | QS DSCFM X10^3 | O2 % DRY | CO2 % DRY | CO PPM DRY | NOX PPM DRY | NOX LB/MBTU | NOX LB/HR | ACROSS DB LB/HR |
| 17 | 14 | 6372 | 0.42 | 797 | 6.4 | 201.7 | 15.7 | 2.95 | 1 | 85 | 85 | 0.332 | 122 | 7.5 | 200.9 | 14.6 | 3.38 | 10 | 55 | 0.275 | 122 | -1.2 |
| 17 | 15 | 6372 | 0.54 | 794 | CEM OFFLINE | | | | | | | | | | | | | | | | | |
| 17 | 16 | 6372 | 0.54 | 769 | 6.7 | 203.6 | 15.7 | 2.87 | 1 | 86 | 88 | 0.345 | 129 | 7.8 | 202.8 | 14.6 | 3.38 | 9 | 89 | 0.288 | 129 | 1.6 |
| 17 | 17 | 6418 | 0.53 | 845 | CEM OFFLINE | | | | | | | | | | | | | | | | | |
| 17 | 18 | 6258 | 0.70 | 919 | CEM OFFLINE | | | | | | | | | | | | | | | | | |
| 17 | 19 | 6509 | 0.80 | 1012 | 7.3 | 206.6 | 15.9 | 2.96 | 6 | 34 | 36 | 0.138 | 50.4 | 8.8 | 207.6 | 14.5 | 3.41 | 15 | 35 | 0.113 | 52.2 | 1.8 |
| 17 | 20 | 6241 | 0.69 | 870 | 7.2 | 210.6 | 15.9 | 2.96 | 7 | 34 | 39 | 0.141 | 51.4 | 8.6 | 209.7 | 14.6 | 3.37 | 15 | 35 | 0.113 | 52.3 | 0.9 |
| 17 | 21 | 6400 | 0.70 | 769 | 7.2 | 209.2 | 15.9 | 2.95 | 7 | 35 | 40 | 0.146 | 52.9 | 8.5 | 208.4 | 14.8 | 3.27 | 15 | 27 | 0.091 | 40.8 | -12.1 |
| 17 | 22 | 5932 | 0.52 | 762 | 6.8 | 207.0 | 16.0 | 2.96 | 7 | 34 | 40 | 0.142 | 50.9 | 8.0 | 206.2 | 14.8 | 3.28 | 15 | 29 | 0.098 | 43.3 | -7.6 |
| 17 | 23 | 3653 | 0.76 | 831 | 5.7 | 178.[illegible] | 17.2 | 2.25 | 77 | 17 | 26 | 0.092 | 22.0 | 7.3 | 176.0 | 15.8 | 2.54 | 75 | 13 | 0.050 | 16.5 | -5.4 |
| 18 | 0 | 3403 | 0.78 | 1098 | 5.5 | 173.2 | 17.3 | 2.14 | 86 | 16 | 26 | 0.093 | 20.1 | 7.5 | 172.1 | 15.5 | 2.73 | 77 | 12 | 0.046 | 15.0 | -5.1 |
| 18 | 1 | 4506 | 0.81 | 1202 | 5.7 | 172.1 | 17.2 | 2.21 | 44 | 22 | 36 | 0.124 | 27.0 | 6.0 | 170.9 | 15.3 | 2.94 | 39 | 15 | 0.061 | 20.0 | -7.1 |
| 18 | 2 | 4882 | 0.50 | 1737 | 6.5 | 174.5 | 16.1 | 2.87 | 16 | 31 | 37 | 0.130 | 38.7 | 8.5 | 172.8 | 14.1 | 3.80 | 17 | 30 | 0.090 | 37.1 | -1.6 |
| 18 | 3 | 4175 | 0.57 | 1615 | 6.1 | 174.7 | 16.5 | 2.59 | 28 | 23 | 31 | 0.108 | 28.5 | 8.3 | 172.9 | 14.3 | 3.64 | 23 | 23 | 0.072 | 26.8 | 0.2 |
| 18 | 4 | 3453 | 0.75 | 2214 | 5.4 | 169.3 | 17.4 | 2.05 | 79 | 19 | 33 | 0.113 | 23.0 | 8.2 | 167.8 | 14.7 | 3.41 | 51 | 20 | 0.067 | 24.3 | 1.3 |
| 18 | 5 | 4777 | 0.75 | 1996 | 6.1 | 167.7 | 16.8 | 2.47 | 18 | 30 | 45 | 0.154 | 35.9 | 6.9 | 165.5 | 14.3 | 3.70 | 16 | 34 | 0.106 | 40.4 | 4.5 |
| 18 | 6 | 7583 | 0.52 | 999 | 7.6 | 199.2 | 15.3 | 3.40 | 7 | 32 | 34 | 0.117 | 45.4 | 9.2 | 197.2 | 13.7 | 4.05 | 16 | 32 | 0.091 | 44.6 | -0.5 |
| 18 | 7 | 7848 | 1.00 | 976 | 9.3 | 205.6 | 14.9 | 3.61 | 5 | 33 | 33 | 0.113 | 49.5 | 10.5 | 208.7 | 13.8 | 3.97 | 17 | 32 | 0.091 | 47.1 | -2.2 |
| 18 | 8 | 7752 | 0.96 | 1021 | CEM OFFLINE | | | | | | | | | | | | | | | | | |
| 18 | 9 | 7604 | 0.95 | 1510 | CEM OFFLINE | | | | | | | | | | | | | | | | | |
| 18 | 10 | 7604 | 0.96 | 1580 | CEM OFFLINE | | | | | | | | | | | | | | | | | |
| 18 | 11 | 7625 | 0.97 | 1493 | CEM OFFLINE | | | | | | | | | | | | | | | | | |
| 18 | 12 | 7566 | 0.97 | 1497 | 9.6 | 204.4 | 14.7 | 3.41 | 3 | 43 | 41 | 0.142 | 62.4 | 11.3 | 202.9 | 13.1 | 4.28 | 15 | 43 | 0.114 | 63.0 | 0.6 |
| 18 | 13 | 7497 | 0.95 | 1499 | 9.4 | 207.2 | 14.7 | 3.40 | 3 | 43 | 40 | 0.142 | 63.3 | 11.1 | 205.7 | 13.1 | 4.29 | 15 | 44 | 0.114 | 64.1 | 0.8 |
| 18 | 14 | 7429 | 0.97 | 1501 | 9.4 | 199.4 | 14.7 | 3.41 | 2 | 43 | 40 | 0.143 | 61.6 | 11.1 | 197.9 | 13.0 | 4.29 | 16 | 41 | 0.108 | 58.6 | -3.0 |
| 18 | 15 | 7403 | 0.97 | 1502 | 9.5 | 174.3 | 14.7 | 3.40 | 3 | 43 | 40 | 0.142 | 53.4 | 11.2 | 172.8 | 13.0 | 4.26 | 16 | 43 | 0.113 | 53.8 | 0.3 |
| 18 | 16 | 7398 | 0.98 | 1502 | 9.5 | 162.8 | 14.8 | 3.35 | 3 | 43 | 40 | 0.144 | 50.2 | 11.2 | 161.3 | 13.0 | 4.27 | 16 | 44 | 0.114 | 50.7 | 0.5 |
| 18 | 17 | 7514 | 0.99 | 1497 | CEM OFFLINE | | | | | | | | | | | | | | | | | |
| 18 | 18 | 7514 | 1.00 | 1362 | 9.6 | . | 14.7 | 3.47 | 3 | 41 | 40 | 0.138 | . | 11.3 | . | 13.1 | 4.21 | 16 | 53 | 0.141 | . | . |
| 18 | 19 | 7565 | 0.99 | 1505 | 9.6 | . | 14.7 | 3.50 | 3 | 41 | 39 | 0.137 | . | 11.3 | . | 13.1 | 4.26 | 16 | 51 | 0.134 | . | . |
| 18 | 20 | 7482 | 0.96 | 1506 | 9.6 | . | 14.7 | 3.50 | 2 | 42 | 40 | 0.139 | . | 11.2 | . | 13.0 | 4.29 | 16 | 49 | 0.127 | . | . |
| 18 | 21 | 7407 | 0.98 | 1492 | 9.6 | . | 14.7 | 3.50 | 2 | 42 | 40 | 0.139 | . | 11.3 | . | 13.0 | 4.29 | 16 | 49 | 0.129 | . | . |
| 18 | 22 | 6868 | 0.98 | 1609 | 9.6 | . | 14.7 | 3.51 | 3 | 42 | 40 | 0.138 | . | 11.2 | . | 13.0 | 4.30 | 16 | 51 | 0.132 | . | . |
| 18 | 23 | 3657 | 0.77 | 2428 | 6.5 | . | 16.8 | 2.29 | 59 | 23 | 32 | 0.111 | . | 9.2 | . | 13.9 | 3.73 | 35 | 32 | 0.094 | . | . |
| 19 | 0 | 3615 | 0.77 | 2389 | 6.1 | . | 17.0 | 2.15 | 74 | 19 | 29 | 0.102 | . | 9.1 | . | 14.0 | 3.67 | 42 | 27 | 0.090 | . | . |
| 19 | 1 | 3805 | 0.73 | 2315 | 6.2 | . | 16.9 | 2.21 | 62 | 20 | 30 | 0.106 | . | 9.1 | . | 14.0 | 3.66 | 37 | 28 | 0.094 | . | . |
| 19 | 2 | 3713 | 0.69 | 2342 | 6.2 | . | 16.9 | 2.25 | 54 | 21 | 31 | 0.108 | . | 9.1 | . | 13.9 | 3.73 | 32 | 30 | 0.095 | . | . |
| 19 | 3 | 3605 | 0.72 | 2423 | 6.3 | . | 16.9 | 2.24 | 57 | 21 | 31 | 0.107 | . | 9.2 | . | 13.9 | 3.73 | 33 | 29 | 0.095 | . | . |
| 19 | 4 | 3769 | 0.73 | 2395 | 6.3 | . | 16.8 | 2.23 | 60 | 21 | 30 | 0.106 | . | 9.2 | . | 13.8 | 3.72 | 36 | 25 | 0.075 | . | . |
| 19 | 5 | 4532 | 0.72 | 2192 | 6.3 | . | 16.8 | 2.24 | 60 | 21 | 30 | 0.103 | . | 9.6 | . | 13.7 | 3.71 | 43 | 28 | 0.081 | . | . |
| 19 | 6 | 6072 | 0.72 | 1779 | 9.1 | . | 15.4 | 3.08 | 20 | 36 | 38 | 0.132 | . | 10.3 | . | 13.2 | 4.03 | 30 | 43 | 0.114 | . | . |
| 19 | 7 | 7750 | 1.00 | 1404 | 10.0 | . | 14.5 | 3.51 | 11 | 39 | 36 | 0.124 | . | 11.5 | . | 12.9 | 4.18 | 27 | 45 | 0.117 | . | . |
| 19 | 8 | 7594 | 0.97 | 1145 | CEM OFFLINE | | | | | | | | | | | | | | | | | |
| 19 | 9 | 7519 | 0.96 | 1080 | CEM OFFLINE | | | | | | | | | | | | | | | | | |

. REPRESENTS MISSING DATA

AVERAGE DUCT BURNER INLET TEMP=1038 F
AVERAGE DUCT BURNER OUTLET TEMP=301 F

GCA/TECHNOLOGY DIVISION

CROWN ZELLERBACH DUCT BURNER CEM DATA
HOURLY AVERAGES

| | | GAS TURBINE | | DUCT BURNER | DUCT BURNER INLET | | | | | | | | | DUCT BURNER OUTLET | | | | | | | | CHANGE |
|---|---|---|---|---|---|---|---|---|---|---|---|---|---|---|---|---|---|---|---|---|---|---|
| DAY | HR | FUEL FLOW SCFM | STEAM INJ. RATIO | FUEL FLOW SCFM | H2O % | QS SCFM X10^3 | O2 % DRY | CO2 % DRY | CO PPM DRY | NOX PPM DRY | NOX PPM ISO | NOX LB/MBTU | NOX LB/HR | H2O % | QS SCFM X10^3 | O2 % DRY | CO2 % DRY | CO PPM DRY | NOX PPM DRY | NOX LB/MBTU | NOX LB/HR | ACROSS DB LB/HR |
| 19 | 10 | 7373 | 0.49 | 663 | 7.8 | 196.2 | 14.9 | 3.40 | 2 | 62 | 59 | 0.214 | 87.5 | 8.6 | 195.6 | 14.0 | 3.82 | 8 | 69 | 0.205 | 97.3 | 9.8 |
| 19 | 11 | 7279 | 0.47 | 673 | 7.6 | 196.2 | 15.0 | 3.42 | 1 | 64 | 60 | 0.219 | 89.3 | 8.8 | 195.5 | 14.0 | 3.82 | 8 | 64 | 0.189 | 89.4 | 0.1 |
| 19 | 12 | 7229 | 0.46 | 681 | 7.9 | 194.0 | 15.0 | 3.41 | 1 | 65 | 63 | 0.226 | 90.6 | 9.0 | 193.3 | 13.9 | 3.82 | 6 | 65 | 0.191 | 89.9 | -0.3 |
| 19 | 13 | 7213 | 0.46 | 695 | CEM OFFLINE | | | | | | | | | | | | | | | | | |
| 19 | 14 | 7196 | 0.45 | 694 | 7.7 | 208.6 | 15.0 | 3.36 | 2 | 68 | 63 | 0.234 | 101 | 8.9 | 207.5 | 13.9 | 3.83 | 8 | 66 | 0.192 | 97.8 | -2.7 |
| 19 | 15 | 7203 | 0.46 | 769 | 7.8 | 204.4 | 15.0 | 3.37 | 1 | 67 | 63 | 0.231 | 98.1 | 8.9 | 203.7 | 13.9 | 3.81 | 7 | 65 | 0.189 | 94.2 | -3.9 |
| 19 | 16 | 7267 | 0.43 | 908 | 7.9 | 207.4 | 15.0 | 3.33 | 1 | 67 | 64 | 0.232 | 100 | 9.0 | 206.7 | 13.8 | 3.66 | 7 | 65 | 0.189 | 96.4 | -3.5 |
| 19 | 17 | 7435 | 0.53 | 992 | CEM OFFLINE | | | | | | | | | | | | | | | | | |
| 19 | 18 | 7398 | 0.92 | 1067 | 9.3 | 205.2 | 14.9 | 3.40 | 2 | 41 | 39 | 0.138 | 59.5 | 10.7 | 204.1 | 13.6 | 4.05 | 9 | 49 | 0.137 | 71.6 | 12.0 |
| 19 | 19 | 7475 | 0.91 | 1100 | 9.4 | 206.3 | 14.8 | 3.52 | 2 | 41 | 40 | 0.139 | 60.4 | 10.8 | 205.2 | 13.5 | 4.12 | 10 | 49 | 0.135 | 71.9 | 11.3 |
| 19 | 20 | 8375 | 0.94 | 1369 | 9.5 | 202.3 | 14.8 | 3.53 | 2 | 40 | 39 | 0.135 | 57.7 | 11.0 | 201.0 | 13.4 | 4.21 | 10 | 47 | 0.128 | 67.9 | 10.2 |
| 19 | 21 | 7090 | 0.99 | 1189 | 9.5 | 201.1 | 14.8 | 3.54 | 2 | 39 | 38 | 0.135 | 56.5 | 11.1 | 199.9 | 13.3 | 4.23 | 10 | 47 | 0.127 | 67.0 | 10.4 |
| 19 | 22 | 5797 | 0.98 | 1493 | 9.4 | 199.4 | 14.9 | 3.52 | 2 | 40 | 39 | 0.137 | 57.0 | 10.8 | 197.9 | 13.4 | 4.23 | 10 | 48 | 0.132 | 68.0 | 11.0 |
| 19 | 23 | 3395 | 0.79 | 2063 | 6.0 | 175.1 | 17.2 | 2.15 | 78 | 18 | 29 | 0.099 | 22.3 | 8.8 | 173.0 | 14.5 | 3.47 | 47 | 22 | 0.071 | 27.8 | 5.5 |
| 20 | 0 | 3569 | 0.75 | 2092 | 6.0 | 163.9 | 17.2 | 2.16 | 84 | 18 | 29 | 0.098 | 20.7 | 8.8 | 161.8 | 14.4 | 3.49 | 51 | 21 | 0.065 | 23.8 | 3.1 |
| 20 | 1 | 3558 | 0.77 | 2040 | 6.0 | 162.0 | 17.2 | 2.16 | 85 | 17 | 28 | 0.096 | 20.1 | 8.8 | 160.0 | 14.5 | 3.46 | 52 | 20 | 0.062 | 22.5 | 2.4 |
| 20 | 2 | 3472 | 0.75 | 2011 | 5.9 | 167.2 | 17.3 | 2.12 | ** | 16 | 27 | 0.092 | 19.5 | 8.6 | 165.2 | 14.5 | 3.37 | 55 | 16 | 0.054 | 19.5 | -0.0 |
| 20 | 3 | 3614 | 0.80 | 2079 | 6.0 | 167.6 | 17.3 | 2.14 | 27 | 33 | 54 | 0.184 | 39.2 | 8.6 | 165.5 | 14.5 | 3.45 | 18 | 47 | 0.150 | 55.3 | 16.1 |
| 20 | 4 | 3343 | 0.79 | 2088 | 5.9 | 169.3 | 17.2 | 2.16 | 78 | 23 | 37 | 0.125 | 27.5 | 8.7 | 167.1 | 14.5 | 3.49 | 42 | 25 | 0.090 | 33.9 | 6.4 |
| 20 | 5 | 3572 | 0.77 | 2074 | 5.5 | 168.3 | 17.2 | 2.15 | 92 | 16 | 27 | 0.092 | 19.8 | 8.7 | 166.2 | 14.5 | 3.45 | 57 | 19 | 0.057 | 20.9 | 1.1 |
| 20 | 6 | 7165 | 0.76 | 1062 | 7.9 | 191.3 | 16.7 | 3.11 | 27 | 34 | 36 | 0.129 | 47.3 | 9.4 | 190.2 | 14.0 | 3.66 | 22 | 34 | 0.111 | 52.9 | 5.6 |
| 20 | 7 | 7669 | 1.00 | 1108 | 9.4 | 203.9 | 14.8 | 3.66 | 2 | 39 | 36 | 0.131 | 56.7 | 10.2 | 202.5 | 13.5 | 4.17 | 11 | 45 | 0.124 | 54.9 | 8.2 |
| 20 | 8 | 7669 | 1.00 | 1108 | CEM OFFLINE | | | | | | | | | | | | | | | | | |
| 20 | 9 | 7612 | 0.48 | 660 | CEM OFFLINE | | | | | | | | | | | | | | | | | |
| 20 | 10 | 7440 | 0.00 | 663 | 6.7 | 205.8 | 15.0 | 3.37 | 1 | 109 | 107 | 0.376 | 160 | 7.6 | 205.1 | 14.1 | 3.81 | 9 | 107 | 0.320 | 157 | -3.3 |
| 20 | 11 | 7346 | 0.00 | 666 | 6.7 | 204.0 | 15.0 | 3.37 | 1 | 110 | 109 | 0.383 | 161 | 7.6 | 203.4 | 14.1 | 3.80 | 8 | 105 | 0.315 | 153 | -8.2 |
| 20 | 12 | 7312 | 0.00 | 669 | 6.8 | 204.6 | 15.0 | 3.33 | 1 | 111 | 110 | 0.385 | 163 | 7.7 | 203.9 | 14.0 | 3.81 | 8 | 105 | 0.313 | 153 | -9.5 |
| 20 | 13 | 7236 | 0.00 | 669 | 6.9 | 201.7 | 15.0 | 3.37 | 1 | 112 | 112 | 0.387 | 162 | 7.8 | 201.0 | 14.0 | 3.81 | 7 | 105 | 0.312 | 151 | -10.9 |
| 20 | 14 | 7207 | 0.00 | 668 | 6.8 | 202.2 | 15.0 | 3.31 | 1 | 113 | 111 | 0.390 | 163 | 7.7 | 201.5 | 14.0 | 3.81 | 7 | 105 | 0.312 | 151 | -12.3 |
| 20 | 15 | 7157 | 0.00 | 663 | 6.9 | 229.7 | 14.9 | 3.32 | 1 | 113 | 111 | 0.389 | 186 | 7.8 | 229.0 | 14.0 | 3.80 | 8 | 104 | 0.309 | 170 | -15.5 |
| 20 | 16 | 7332 | 0.00 | 658 | 6.6 | 215.5 | 15.0 | 3.32 | 1 | 109 | 105 | 0.376 | 168 | 7.5 | 214.5 | 14.0 | 3.77 | 8 | 104 | 0.311 | 160 | -7.7 |
| 20 | 17 | 7263 | 0.00 | 945 | 7.1 | 218.6 | 14.8 | 3.52 | 1 | 64 | 64 | 0.218 | 101 | 8.2 | 217.9 | 13.6 | 4.05 | 11 | 60 | 0.172 | 93.4 | -7.4 |
| 20 | 18 | 7400 | 0.98 | 927 | 9.7 | 211.8 | 14.7 | 3.56 | 2 | 40 | 39 | 0.134 | 61.1 | 10.6 | 210.9 | 13.8 | 3.92 | 12 | 36 | 0.104 | 54.3 | -6.8 |
| 20 | 19 | 7427 | 0.96 | 1319 | 9.7 | 209.0 | 14.7 | 3.57 | 2 | 40 | 38 | 0.131 | 59.4 | 11.2 | 207.6 | 13.2 | 4.29 | 15 | 36 | 0.096 | 53.4 | -6.0 |
| 20 | 20 | 7464 | 0.99 | 1284 | 9.8 | 206.9 | 14.7 | 3.58 | 2 | 39 | 38 | 0.130 | 58.2 | 11.4 | 205.6 | 13.1 | 4.37 | 16 | 35 | 0.095 | 52.6 | -5.6 |
| 20 | 21 | 7454 | 1.00 | 1052 | 9.8 | 203.5 | 14.7 | 3.58 | 2 | 39 | 38 | 0.129 | 57.0 | 11.0 | 202.5 | 13.5 | 4.14 | 12 | 36 | 0.099 | 52.2 | -4.8 |
| 20 | 22 | 7281 | 0.97 | 1204 | 9.7 | 204.4 | 14.7 | 3.59 | 1 | 40 | 39 | 0.133 | 58.7 | 10.8 | 203.4 | 13.6 | 4.09 | 11 | 37 | 0.104 | 54.1 | -4.7 |
| 20 | 23 | 3595 | 0.63 | 1936 | 6.7 | 175.3 | 16.5 | 2.49 | 51 | 24 | 31 | 0.108 | 31.0 | 8.7 | 174.4 | 14.2 | 3.61 | 36 | 23 | 0.069 | 28.9 | -2.1 |
| 21 | 0 | 3471 | 0.76 | 1104 | 6.3 | 164.0 | 17.0 | 2.18 | 71 | 19 | 29 | 0.101 | 22.4 | 8.6 | 162.2 | 14.6 | 3.33 | 51 | 16 | 0.051 | 18.1 | -4.4 |
| 21 | 1 | 3680 | 0.78 | 1206 | 6.4 | 175.7 | 17.0 | 2.20 | 77 | 17 | 26 | 0.091 | 22.0 | 8.7 | 173.9 | 14.5 | 3.35 | 55 | 13 | 0.043 | 15.2 | -5.8 |
| 21 | 2 | 3545 | 0.75 | 1757 | 6.3 | 174.6 | 17.0 | 2.20 | 77 | 17 | 26 | 0.091 | 21.9 | 8.6 | 172.8 | 14.5 | 3.34 | 54 | 13 | 0.043 | 16.3 | -5.5 |
| 21 | 3 | 3569 | 0.75 | 1825 | 6.5 | 170.9 | 16.8 | 2.19 | 81 | 17 | 25 | 0.087 | 21.0 | 8.6 | 169.0 | 14.6 | 3.34 | 56 | 13 | 0.042 | 15.7 | -5.3 |
| 21 | 4 | 3581 | 0.77 | 1850 | 6.6 | 171.4 | 16.8 | 2.19 | 85 | 17 | 25 | 0.085 | 21.0 | 8.8 | 169.5 | 14.5 | 3.34 | 61 | 13 | 0.042 | 15.9 | -5.1 |
| 21 | 5 | 3575 | 0.76 | 1820 | 6.5 | 173.7 | 16.8 | 2.20 | 85 | 17 | 25 | 0.085 | 21.2 | 8.8 | 171.8 | 14.4 | 3.32 | 65 | 13 | 0.041 | 15.9 | -5.4 |

. REPRESENTS MISSING DATA

AVERAGE DUCT BURNER INLET TEMP=1036 F
AVERAGE DUCT BURNER OUTLET TEMP=301 F

GCA/TECHNOLOGY DIVISION

CROWN ZELLERBACH DUCT BURNER CEM DATA
HOURLY AVERAGES

| | | GAS TURBINE | | DUCT BURNER | DUCT BURNER INLET | | | | | | | | | DUCT BURNER OUTLET | | | | | | | | CHANGE |
|---|---|---|---|---|---|---|---|---|---|---|---|---|---|---|---|---|---|---|---|---|---|---|
| DAY | HR | FUEL FLOW SCFM | STEAM INJ. RATIO | FUEL FLOW SCFM | H2O % | QS DSCFM X10 3 | O2 % DRY | CO2 % DRY | CO PPM DRY | NOX PPM DRY | NOX PPM ISO | NOX LB/MBTU | NOX LB/HR | H2O % | QS DSCFM X10 3 | O2 % DRY | CO2 % DRY | CO PPM DRY | NOX PPM DRY | NOX LB/MBTU | NOX LB/HR | ACROSS DB LB/HR |
| 21 | 6 | 6897 | 0.79 | 962 | 8.5 | 193.7 | 15.3 | 3.10 | 32 | 35 | 36 | 0.123 | 49.0 | 10.1 | 192.7 | 13.9 | 3.74 | 34 | 30 | 0.086 | 42.2 | -6.5 |
| 21 | 7 | 7442 | 0.96 | 1007 | 5.7 | 204.7 | 14.5 | 3.60 | 10 | 41 | 37 | 0.130 | 59.5 | 10.8 | 203.7 | 13.4 | 4.09 | 21 | 37 | 0.102 | 54.3 | -5.2 |
| 21 | 8 | 7467 | 0.97 | 1096 | 9.7 | 205.7 | 14.6 | 3.60 | 12 | 40 | 36 | 0.129 | 58.3 | 10.8 | 204.6 | 13.4 | 4.16 | 22 | 37 | 0.100 | 53.7 | -4.6 |
| 21 | 9 | 7374 | 0.92 | 1380 | CEM OFFLINE | | | | | | | | | | | | | | | | | |
| 21 | 10 | 7325 | 0.91 | 1210 | CEM OFFLINE | | | | | | | | | | | | | | | | | |
| 21 | 11 | 7279 | 0.96 | 869 | CEM OFFLINE | | | | | | | | | | | | | | | | | |
| 21 | 12 | 7302 | 0.93 | 1165 | CEM OFFLINE | | | | | | | | | | | | | | | | | |
| 21 | 13 | 7208 | 0.95 | 1292 | 9.2 | 205.3 | 14.9 | 3.52 | 7 | 41 | 40 | 0.141 | 60.3 | 11.0 | 204.0 | 13.3 | 4.24 | 10 | 41 | 0.109 | 59.4 | -0.9 |
| 21 | 14 | 7277 | 0.93 | 1345 | 9.3 | 203.7 | 14.9 | 3.62 | 6 | 41 | 39 | 0.140 | 60.3 | 11.0 | 202.4 | 13.2 | 4.23 | 10 | 39 | 0.104 | 56.4 | -3.9 |
| 21 | 15 | 7183 | 0.93 | 1327 | 9.3 | 201.9 | 14.9 | 3.63 | 5 | 41 | 39 | 0.140 | 59.6 | 11.1 | 200.5 | 13.1 | 4.22 | 11 | 40 | 0.107 | 58.0 | -1.6 |
| 21 | 16 | 7115 | 0.94 | 1315 | 9.5 | 199.8 | 14.8 | 3.63 | 6 | 41 | 39 | 0.139 | 59.0 | 11.2 | 198.5 | 13.2 | 4.17 | 12 | 41 | 0.106 | 58.1 | -0.9 |
| 21 | 17 | 7295 | 0.95 | 1328 | 9.6 | 197.8 | 14.8 | 3.63 | 6 | 40 | 39 | 0.136 | 57.3 | 11.3 | 196.5 | 13.1 | 4.16 | 12 | 40 | 0.106 | 56.3 | -1.0 |
| 21 | 18 | 7246 | 1.00 | 1347 | 9.6 | 201.3 | 14.8 | 3.62 | 5 | 39 | 39 | 0.132 | 56.7 | 11.5 | 200.0 | 13.2 | 4.16 | 13 | 38 | 0.102 | 55.0 | -1.7 |
| 21 | 19 | 7341 | 0.96 | 1248 | 9.6 | 202.6 | 14.8 | 3.63 | 6 | 39 | 38 | 0.132 | 57.2 | 11.3 | 201.3 | 13.1 | 4.23 | 12 | 38 | 0.099 | 54.1 | -3.0 |
| 21 | 20 | 7193 | 0.90 | 1369 | 9.5 | 202.2 | 14.8 | 3.64 | 6 | 40 | 38 | 0.133 | 57.2 | 11.0 | 200.9 | 13.2 | 4.25 | 11 | 37 | 0.095 | 52.8 | -4.4 |
| 21 | 21 | 7333 | 0.95 | 1390 | 9.6 | 202.6 | 14.8 | 3.61 | 5 | 39 | 38 | 0.132 | 56.8 | 11.1 | 201.2 | 13.2 | 4.30 | 9 | 40 | 0.107 | 57.7 | 0.9 |
| 21 | 22 | 7375 | 0.96 | 1328 | 9.6 | 204.7 | 14.8 | 3.65 | 5 | 39 | 38 | 0.131 | 56.9 | 11.1 | 203.4 | 13.3 | 4.28 | 9 | 37 | 0.100 | 54.2 | -2.6 |
| 21 | 23 | 3744 | 1.00 | 2129 | 7.5 | 179.1 | 16.4 | 2.64 | 29 | 26 | 38 | 0.130 | 37.1 | 9.7 | 176.9 | 14.0 | 3.75 | 21 | 29 | 0.087 | 37.5 | 0.4 |
| 22 | 0 | 3511 | 0.79 | 2113 | 6.2 | 169.9 | 17.1 | 2.22 | 60 | 17 | 26 | 0.090 | 20.3 | 9.0 | 167.8 | 14.4 | 3.53 | 45 | 15 | 0.047 | 18.2 | -2.0 |
| 22 | 1 | 3502 | 0.80 | 2101 | 6.2 | 170.6 | 17.1 | 2.22 | 59 | 17 | 27 | 0.094 | 21.2 | 9.0 | 166.5 | 14.4 | 3.53 | 44 | 16 | 0.050 | 19.4 | -1.9 |
| 22 | 2 | 3638 | 0.77 | 2148 | 6.3 | 170.9 | 17.1 | 2.24 | 62 | 16 | 25 | 0.087 | 19.9 | 8.9 | 168.7 | 14.4 | 3.50 | 48 | 14 | 0.044 | 16.8 | -3.1 |
| 22 | 3 | 3452 | 0.78 | 2022 | 6.3 | 170.8 | 17.1 | 2.24 | 62 | 16 | 25 | 0.087 | 19.7 | 8.9 | 168.7 | 14.4 | 3.51 | 48 | 14 | 0.044 | 16.9 | -2.9 |
| 22 | 4 | 3494 | 0.76 | 1674 | 6.2 | 171.5 | 17.1 | 2.23 | 66 | 16 | 25 | 0.085 | 19.2 | 8.9 | 169.6 | 14.4 | 3.47 | 52 | 13 | 0.041 | 15.8 | -3.3 |
| 22 | 5 | 3814 | 0.71 | 1122 | 6.4 | 169.5 | 16.9 | 2.36 | 44 | 16 | 28 | 0.094 | 22.3 | 8.2 | 168.7 | 15.2 | 2.95 | 47 | 13 | 0.045 | 15.3 | -7.0 |
| 22 | 6 | 3720 | 0.72 | 1140 | 6.4 | 171.7 | 16.9 | 2.36 | 41 | 18 | 28 | 0.094 | 22.7 | 8.2 | 170.6 | 15.2 | 2.97 | 43 | 13 | 0.046 | 15.8 | -6.8 |
| 22 | 7 | 3726 | 0.71 | 1162 | 6.3 | 172.3 | 17.1 | 2.29 | 56 | 16 | 26 | 0.087 | 20.1 | 8.2 | 171.2 | 15.2 | 2.91 | 61 | 10 | 0.036 | 12.3 | -7.8 |
| 22 | 8 | 3653 | 0.74 | 1591 | CEM OFFLINE | | | | | | | | | | | | | | | | | |
| 22 | 9 | 3683 | 0.76 | 1975 | CEM OFFLINE | | | | | | | | | | | | | | | | | |
| 22 | 10 | 3535 | 0.75 | 1.91 | 7.0 | 167.6 | 16.5 | 2.20 | 51 | 16 | 23 | 0.077 | 19.7 | 8.7 | 165.6 | 14.5 | 3.42 | 55 | 14 | 0.044 | 16.1 | -3.7 |
| 22 | 11 | 3606 | 0.77 | 2063 | 7.0 | 168.2 | 16.5 | 2.21 | 89 | 16 | 22 | 0.076 | 19.6 | 8.8 | 166.2 | 14.4 | 3.50 | 53 | 13 | 0.041 | 15.4 | -4.1 |
| 22 | 12 | 3628 | 0.76 | 2090 | 6.9 | 168.5 | 16.5 | 2.22 | 86 | 17 | 22 | 0.076 | 20.0 | 8.7 | 166.4 | 14.4 | 3.53 | 51 | 14 | 0.042 | 16.1 | -3.9 |
| 22 | 13 | 3555 | 0.77 | 2014 | 7.1 | 169.0 | 16.4 | 2.23 | 79 | 17 | 23 | 0.079 | 21.0 | 8.9 | 166.9 | 14.3 | 3.55 | 45 | 15 | 0.046 | 17.8 | -3.2 |
| 22 | 14 | 3625 | 0.77 | 2019 | 7.1 | 168.1 | 16.4 | 2.25 | 76 | 18 | 23 | 0.082 | 21.7 | 8.9 | 166.1 | 14.3 | 3.55 | 44 | 15 | 0.048 | 18.2 | -3.4 |
| 22 | 15 | 3618 | 0.76 | 1998 | 7.1 | 170.4 | 16.4 | 2.25 | 71 | 18 | 23 | 0.083 | 22.2 | 8.9 | 168.3 | 14.3 | 3.54 | 42 | 16 | 0.050 | 19.5 | -2.7 |
| 22 | 16 | 3551 | 0.76 | 2001 | 7.2 | 173.4 | 16.4 | 2.24 | 74 | 16 | 24 | 0.083 | 22.5 | 9.0 | 171.4 | 14.3 | 3.53 | 43 | 16 | 0.050 | 19.5 | -2.9 |
| 22 | 17 | 3559 | 0.78 | 2090 | 7.1 | 174.5 | 16.5 | 2.19 | 50 | 17 | 23 | 0.080 | 21.5 | 9.0 | 172.4 | 14.4 | 3.52 | 51 | 14 | 0.045 | 17.7 | -3.9 |
| 22 | 18 | 3528 | 0.79 | 2111 | 7.1 | 170.3 | 16.5 | 2.18 | 99 | 17 | 23 | 0.078 | 20.5 | 9.0 | 168.1 | 14.3 | 3.52 | 57 | 13 | 0.042 | 16.2 | -4.3 |
| 22 | 19 | 3473 | 0.79 | 2079 | 7.2 | 169.6 | 16.5 | 2.17 | ** | 16 | 22 | 0.077 | 20.0 | 9.1 | 167.5 | 14.3 | 3.54 | 57 | 13 | 0.042 | 16.2 | -3.8 |
| 22 | 20 | 3509 | 0.78 | 2148 | 7.1 | 170.3 | 16.5 | 2.19 | 95 | 17 | 23 | 0.078 | 20.3 | 8.8 | 166.2 | 14.4 | 3.49 | 56 | 13 | 0.042 | 15.8 | -4.5 |
| 22 | 21 | 3542 | 0.76 | 2130 | 7.1 | 170.2 | 16.6 | 2.17 | ** | 16 | 22 | 0.076 | 19.6 | 9.0 | 168.1 | 14.4 | 3.55 | 56 | 13 | 0.042 | 16.2 | -3.4 |
| 22 | 22 | 3524 | 0.76 | 2056 | 7.1 | 170.6 | 16.5 | 2.20 | 95 | 16 | 23 | 0.077 | 19.9 | 9.0 | 166.5 | 14.4 | 3.51 | 56 | 13 | 0.041 | 15.4 | -4.5 |
| 22 | 23 | 3587 | 0.76 | 2052 | 7.1 | 170.5 | 16.5 | 2.21 | 90 | 17 | 23 | 0.078 | 20.2 | 8.9 | 168.5 | 14.4 | 3.54 | 52 | 14 | 0.043 | 16.4 | -3.5 |
| 23 | 0 | 3541 | 0.75 | 2116 | 7.1 | 171.9 | 16.6 | 2.21 | 91 | 16 | 23 | 0.077 | 20.1 | 8.9 | 169.0 | 14.4 | 3.55 | 52 | 14 | 0.043 | 16.5 | -3.6 |
| 23 | 1 | 3635 | 0.76 | 2071 | 7.1 | 171.6 | 16.5 | 2.22 | 66 | 22 | 31 | 0.104 | 27.3 | 9.0 | 169.5 | 14.4 | 3.59 | 38 | 22 | 0.069 | 26.7 | -0.6 |

. REPRESENTS MISSING DATA

AVERAGE DUCT BURNER INLET TEMP=1038 F
AVERAGE DUCT BURNER OUTLET TEMP=301 F

GCA/TECHNOLOGY DIVISION

CROWN ZELLERBACH DUCT BURNER CEM DATA
HOURLY AVERAGES

| | | GAS TURBINE | | DUCT BURNER | DUCT BURNER INLET | | | | | | | | | DUCT BURNER OUTLET | | | | | | | | CHANGE |
|---|---|---|---|---|---|---|---|---|---|---|---|---|---|---|---|---|---|---|---|---|---|---|
| DAY | HR | FUEL FLOW SCFM | STEAM INJ. RATIO | FUEL FLOW SCFM | H2O % | GS DSCFM X10^3 | O2 % DRY | CO2 % DRY | CO PPM DRY | NOX PPM DRY | NOX PPM ISO | NOX LB/MBTU | NOX LB/HR | H2O % | GS DSCFM X10^3 | O2 % DRY | CO2 % DRY | CO PPM DRY | NOX PPM DRY | NOX LB/MBTU | NOX LB/HR | ACROSS DB LB/HR |
| 23 | 2 | 3555 | 0.69 | 1696 | 7.1 | 170.0 | 16.5 | 2.26 | 17 | 37 | 51 | 0.171 | 45.2 | 8.6 | 168.1 | 14.6 | 3.43 | 15 | 41 | 0.132 | 48.9 | 3.8 |
| 23 | 3 | 3559 | 0.06 | 1687 | 5.8 | 172.7 | 16.5 | 2.20 | 19 | 34 | 48 | 0.162 | 42.6 | 7.5 | 170.6 | 14.5 | 3.36 | 16 | 36 | 0.125 | 46.1 | 3.4 |
| 23 | 4 | 3688 | 0.06 | 1958 | 5.7 | 172.3 | 16.6 | 2.20 | 19 | 35 | 49 | 0.164 | 43.0 | 7.5 | 170.3 | 14.6 | 3.37 | 16 | 38 | 0.124 | 45.0 | 3.0 |
| 23 | 5 | 3484 | 0.75 | 1976 | 7.2 | 172.0 | 16.5 | 2.23 | 75 | 20 | 28 | 0.094 | 25.0 | 8.8 | 170.0 | 14.5 | 3.48 | 45 | 18 | 0.057 | 21.5 | -3.5 |
| 23 | 6 | 7273 | 0.75 | 1030 | 8.7 | 195.1 | 15.0 | 3.20 | 28 | 34 | 53 | 0.115 | 48.8 | 9.9 | 194.1 | 13.9 | 3.89 | 25 | 25 | 0.082 | 40.3 | -8.5 |
| 23 | 7 | 7612 | 0.99 | 1402 | 10.0 | 204.4 | 14.4 | 3.65 | 5 | 39 | 36 | 0.124 | 57.1 | 10.6 | 202.9 | 13.6 | 4.12 | 15 | 35 | 0.098 | 50.6 | -6.5 |
| 23 | 8 | 7612 | 0.99 | 1402 | CEM OFFLINE | | | | | | | | | | | | | | | | | |
| 23 | 9 | 7353 | 0.25 | 2023 | 6.7 | 201.5 | 15.1 | 3.49 | 4 | 101 | 104 | 0.361 | 146 | 9.1 | 199.2 | 12.7 | 4.68 | 16 | 103 | 0.259 | 147 | 0.9 |
| 23 | 10 | 7216 | 0.00 | 2148 | 6.6 | 206.5 | 15.2 | 3.43 | 4 | 107 | 109 | 0.385 | 159 | 8.9 | 204.3 | 12.6 | 4.64 | 14 | 106 | 0.267 | 155 | -3.5 |
| 23 | 11 | 7080 | 0.00 | 2190 | 6.6 | 210.1 | 15.2 | 3.40 | 4 | 109 | 109 | 0.393 | 164 | 8.9 | 207.9 | 12.6 | 4.64 | 13 | 106 | 0.269 | 158 | -5.4 |
| 23 | 12 | 6963 | 0.00 | 2208 | 6.2 | 208.1 | 15.2 | 3.43 | 4 | 110 | 104 | 0.398 | 165 | 8.5 | 205.9 | 12.7 | 4.67 | 11 | 109 | 0.273 | 160 | -4.5 |
| 23 | 13 | 6943 | 0.00 | 2204 | 6.5 | 201.7 | 15.2 | 3.42 | 4 | 111 | 107 | 0.398 | 160 | 8.8 | 199.4 | 12.7 | 4.67 | 11 | 109 | 0.273 | 156 | -4.4 |
| 23 | 14 | 6973 | 0.00 | 2208 | 6.4 | 201.4 | 15.2 | 3.39 | 4 | 112 | 109 | 0.404 | 162 | 8.8 | 199.1 | 12.7 | 4.67 | 11 | 111 | 0.278 | 158 | -3.7 |
| 23 | 15 | 6983 | 0.21 | 2205 | CEM OFFLINE | | | | | | | | | | | | | | | | | |
| 23 | 16 | 7135 | 0.95 | 2205 | 8.9 | 201.4 | 15.0 | 3.60 | 5 | 44 | 41 | 0.154 | 63.9 | 11.3 | 199.1 | 12.6 | 4.77 | 21 | 42 | 0.103 | 59.5 | -4.4 |
| 23 | 17 | 7163 | 0.94 | 2198 | 9.1 | 200.4 | 15.0 | 3.56 | 5 | 43 | 41 | 0.150 | 62.3 | 11.5 | 198.2 | 12.6 | 4.73 | 21 | 41 | 0.101 | 58.2 | -4.0 |
| 23 | 18 | 7337 | 0.97 | 2191 | 9.3 | 199.5 | 15.0 | 3.53 | 6 | 41 | 40 | 0.142 | 58.4 | 11.7 | 197.3 | 12.6 | 4.74 | 25 | 38 | 0.094 | 53.8 | -4.6 |
| 23 | 19 | 7393 | 0.92 | 2190 | 9.3 | 198.3 | 14.9 | 3.54 | 6 | 43 | 42 | 0.147 | 60.7 | 11.6 | 196.1 | 12.6 | 4.74 | 25 | 39 | 0.096 | 54.3 | -6.4 |
| 23 | 20 | 7414 | 0.92 | 2189 | 9.2 | 198.3 | 14.9 | 3.63 | 5 | 44 | 43 | 0.151 | 62.4 | 11.4 | 196.1 | 12.6 | 4.74 | 25 | 39 | 0.096 | 54.7 | -7.7 |
| 23 | 21 | 7543 | 0.93 | 2187 | 9.3 | 197.8 | 14.9 | 3.64 | 4 | 43 | 43 | 0.149 | 61.4 | 11.6 | 195.5 | 12.6 | 4.73 | 26 | 39 | 0.097 | 54.8 | -6.5 |
| 23 | 22 | 7192 | 0.93 | 1162 | 9.4 | 198.3 | 14.9 | 3.68 | 4 | 43 | 43 | 0.147 | 61.2 | 11.2 | 197.1 | 13.2 | 4.36 | 17 | 39 | 0.104 | 55.1 | -6.1 |
| 23 | 23 | 3751 | 0.86 | 2222 | 6.7 | 191.8 | 15.8 | 2.48 | 54 | 30 | 44 | 0.152 | 41.4 | 8.6 | 189.6 | 14.5 | 3.46 | 27 | 30 | 0.095 | 40.6 | -0.9 |
| 24 | 0 | 3521 | 0.75 | 2126 | 5.5 | 193.6 | 17.6 | 1.98 | 70 | 18 | 32 | 0.111 | 24.8 | 8.3 | 191.4 | 14.9 | 3.16 | 49 | 15 | 0.055 | 21.1 | -3.7 |
| 24 | 1 | 3593 | 0.79 | 2189 | 5.6 | 192.3 | 17.6 | 1.97 | 66 | 19 | 34 | 0.117 | 26.1 | 8.2 | 190.1 | 15.0 | 3.09 | 48 | 15 | 0.054 | 21.0 | -5.1 |
| 24 | 2 | 3900 | 0.75 | 2261 | 5.8 | 194.0 | 17.4 | 2.10 | 51 | 22 | 38 | 0.128 | 30.4 | 8.5 | 191.7 | 14.8 | 3.31 | 35 | 20 | 0.057 | 27.7 | -2.7 |
| 24 | 3 | 3843 | 0.72 | 2240 | 5.7 | 194.9 | 17.4 | 2.11 | 46 | 22 | 37 | 0.126 | 30.3 | 8.4 | 192.6 | 14.7 | 3.30 | 33 | 21 | 0.069 | 28.5 | -1.5 |
| 24 | 4 | 3742 | 0.75 | 2211 | 5.7 | 195.2 | 17.4 | 2.10 | 51 | 21 | 36 | 0.124 | 29.7 | 8.4 | 193.0 | 14.8 | 3.26 | 36 | 20 | 0.066 | 27.1 | -2.5 |
| 24 | 5 | 4711 | 0.74 | 1992 | 5.7 | 194.2 | 17.5 | 2.06 | 60 | 20 | 35 | 0.119 | 27.9 | 8.6 | 192.1 | 14.8 | 3.25 | 40 | 18 | 0.060 | 24.4 | -3.5 |
| 24 | 6 | 6275 | 0.77 | 1509 | 7.8 | 204.0 | 15.7 | 3.1[illegible] | 20 | 35 | 40 | 0.138 | 52.1 | 9.6 | 202.5 | 13.9 | 3.88 | 21 | 30 | [illegible] | 44.1 | -8.0 |
| 24 | 7 | 7571 | 0.93 | 1071 | 9.4 | 205.2 | 14.8 | 3.70 | 6 | 40 | 37 | 0.134 | 58.2 | 10.7 | 204.1 | 13.5 | 4.17 | 16 | 34 | 0.093 | 49.0 | -9.2 |
| 24 | 8 | 7417 | 1.00 | 1306 | CEM OFFLINE | | | | | | | | | | | | | | | | | |
| 24 | 9 | 7359 | 0.49 | 1588 | CEM OFFLINE | | | | | | | | | | | | | | | | | |
| 24 | 10 | 7272 | 0.48 | 2194 | CEM OFFLINE | | | | | | | | | | | | | | | | | |
| 24 | 11 | 7183 | 0.48 | 2197 | 7.6 | 204.2 | 15.1 | 3.52 | 6 | 62 | 60 | 0.217 | 90.1 | 10.0 | 201.9 | 12.6 | 4.73 | 17 | 60 | 0.151 | 86.2 | -3.9 |
| 24 | 12 | 7205 | 0.50 | 2219 | 7.8 | 201.0 | 15.0 | 3.49 | 6 | 61 | 57 | 0.213 | 87.7 | 10.1 | 198.8 | 12.7 | 4.77 | 16 | 59 | 0.148 | 84.1 | -3.6 |
| 24 | 13 | 6875 | 0.51 | 2257 | 7.9 | 196.1 | 15.0 | 3.51 | 5 | 59 | 56 | 0.206 | 83.4 | 10.1 | 193.8 | 12.7 | 4.76 | 18 | 58 | 0.144 | 80.4 | -3.1 |
| 24 | 14 | 6942 | 0.50 | 2210 | 7.9 | 196.1 | 15.0 | 3.55 | 5 | 60 | 57 | 0.209 | 84.5 | 10.1 | 193.8 | 12.7 | 4.76 | 17 | 59 | 0.147 | 81.9 | -2.6 |
| 24 | 15 | 7062 | 0.50 | 2193 | 8.2 | 197.0 | 14.7 | 3.45 | 9 | 59 | 53 | 0.196 | 83.1 | 9.5 | 194.6 | 13.2 | 4.44 | 14 | 57 | 0.153 | 80.0 | -3.1 |
| 24 | 16 | 6978 | 0.50 | 2190 | 8.4 | 196.2 | 14.6 | 3.42 | 10 | 59 | 51 | 0.191 | 83.1 | 9.9 | 194.0 | 12.9 | 4.62 | 14 | 63 | 0.162 | 88.1 | 4.9 |
| 24 | 17 | 6978 | 0.50 | 2189 | CEM OFFLINE | | | | | | | | | | | | | | | | | |

. REPRESENTS MISSING DATA

AVERAGE DUCT BURNER INLET TEMP=1038 F
AVERAGE DUCT BURNER OUTLET TEMP=301 F

GCA CORPORATION
Technology Division
GCA

213 Burlington Road
Bedford, Massachusetts 01730
Telephone 617-275-5444
Telex 92-3339

SHEET 1 OF 5
BY JME
DATE 3/5/84
CH'K. BY WJP
DATE CH'K. 3/6/84
B'K. CH'K. BY

JOB NO. 1-627-002
PROJECT CROWN ZELLERBACH/DUCT BURNER
SUBJECT DATA REDUCTION PROGRAM VALIDATION
(SAMPLE CALCULATION)

DATE 24 TIME 1300

MEASURED PARAMETERS

| | | | | |
|---|---|---|---|---|
| DW | = | 31.56 | (MW) | TURBINE LOAD |
| TTRX | = | 1037 | (F) | TURBINE EXHAUST GAS TEMP. |
| CTIM | = | 66 | (F) | AMBIENT TEMP |
| CPD | = | 141.8 | (PSIG) | TRBN COMBUSTOR INLET TEMP. |
| WXJ | = | 0.508 | (RATIO) | TURBINE STEAM : FUEL RATIO |
| WQJ | = | 2.36 | (LB/SEC) | TRBN STEAM INJECTION RATE |
| FQJ | = | 4.632 | (LB/SEC) | TRBN FUEL INJECTION RATE |
| DBFFI | = | 2337 | (scfm) | DUCT BURNER FUEL FLOW (integrator) |
| GTFFI | = | 6875 | (scfm) | GAS TURBINE FUEL FLOW (integrator) |
| HPSFI | = | $143 \times 10^3$ | (lb/hr) | HIGH PRESSURE STEAM FLOW RATE |
| LPSFI | = | $19 \times 10^3$ | (lb/hr) | LOW PRESSURE STEAM FLOW RATE |
| DBFFS | = | 2317 | (scfm) | DUCT BURNER FUEL FLOW RATE (STRIP CHART) |
| BTEMP | = | 1520 | (F) | BOILER TEMPERATURE |
| BPRESS | = | 590 | (PSIG) | BOILER PRESSURE |
| LPSFS | = | $19 \times 10^3$ | (lb/hr) | LOW PRESSURE STEAM FLOW RATE |
| HPSFS | = | $254 \times 10^3$ | (lb/hr) | HIGH PRESSURE STEAM FLOW RATE |
| ZNOx | = | 62 | (ppm wet) | STACK $NO_x$ (Lear Siegler) |
| ZO2 | = | 11.4 | (% wet) | STACK $O_2$ (Lear Siegler) |

| | | RAW VOLTAGE | | SLOPE | | Y-INTERCEPT |
|---|---|---|---|---|---|---|
| RGTNOx | = | 0.2217 | MGTNOx | = | 254 | BGTNOx = -1.0 |
| RGTO2 | = | 0.5914 | MGTO2 | = | 25.4 | BGTO2 = 0.0 |
| RGTCO2 | = | 0.1724 | MGTCO2 | = | 20.4 | BGTCO2 = 0.0 |
| RGTCO | = | 0.0143 | MGTCO | = | 1093 | BGTCO = 0.0 |
| DBTEMP | = | 301.1 | (F) | | | DUCT BURNER TEMPERATURE |
| RDBNOx | = | 0.3469 | MDBNOx | = | 155 | BDBNOx = -1.6 |
| RDBO2 | = | 0.4930 | MDBO2 | = | 25.7 | BDBO2 = 0.0 |
| RDBCO2 | = | 0.1913 | MDBCO2 | = | 24.9 | BDBCO2 = 0.0 |
| RDBCO | = | 0.0221 | MDBCO | = | 1381 | BDBCO = 0.0 |
| RDBDP | = | 0.0943 | MDBD | = | 14.97 | BDBDP = -0.949 |
| ACRH | = | 27 | (%RH) | | | CONCORD RELATIVE HUMIDITY |
| ACHUM | = | 0.0037 | ($lb_{H_2O}/lb_{air}$) | | | CONCORD ABSOLUTE HUMIDITY |
| ACPBAR | = | 30.32 | (in. Hg) | | | CONCORD BAROMETRIC PRESSURE |

GCA CORPORATION
Technology Division
213 Burlington Road
Bedford, Massachusetts 01730
Telephone 617-275-5444
Telex 92-3339

SHEET 2 OF 5
BY JMF
DATE 3/15/84
CH'K. BY [illegible]
DATE CH'K. 3/16/84
B'K. CH'K. BY

JOB NO.
PROJECT
SUBJECT Sample Calc cont.

CALCULATED PARAMETERS DATE 24 TIME 1300

$WGTNO_X = MGTNO_X * RGTNO_X + BGTNO_X$
$= 254 \cdot 0.2217 - 1.0 = 55.31\ ppm\ NO_X$ (wet)

$GTO_2 = MGTO_2 * RGTO_2 + BGTO_2$
$= 25.4 \cdot 0.5914 + 0.0 = 15.02\%\ O_2$

$GTCO_2 = MGTCO_2 * RGTCO_2 + BGTCO_2$
$= 20.4 \cdot 0.1724 + 0.00 = 3.52\%\ CO_2$

$GTCO = MGTCO * RGTCO + BGTCO$
$= 1093 \cdot 0.0143 + 0.0 = 15.63\ ppm\ CO$

$WDBNO_X = MDBNO_X * RDBNO_X + BDBNO_X$
$= 155 \cdot 0.3469 - 1.6 = 52.17\ ppm\ NO_X$ (wet)

$DBO_2 = MDBO_2 * RDBO_2 + BDBO_2$
$= 25.7 \cdot 0.4930 + 0.0 = 12.67\%\ O_2$

$DBCO_2 = MDBCO_2 * RDBCO_2 + BDBCO_2$
$= 24.9 \cdot 0.1913 + 0.0 = 4.76\%\ CO_2$

$DBCO = MDBCO * RDBCO + BDBCO$
$= 1381 \cdot 0.0221 + 0.0 = 30.52\ ppm\ CO$

$DBDP = MDBDP * RDBDP + BDBDP$
$= 1497 \cdot 0.0943 - 0.949 = 0.537\ in\ H_2O$

$GTWDRY = 0.5167 * 20.9/(20.9 - GTO_2)$
$= 0.5167 \cdot 20.9/(20.9 - 15.02) = 1.8866$

$DBWDRY = 0.5167 * 20.9/(20.9 - DBO_2)$
$= 0.5167 \cdot 20.9/(20.9 - 12.67) = 1.3122$

GCA CORPORATION
Technology Division
213 Burlington Road
Bedford, Massachusetts 01730
Telephone. 617-275-5444
Telex 92-3339

SHEET 3 OF 5
BY JMF
DATE 3/5/84
CH'K. BY
DATE CH'K. 3/6/84
B'K. CH'K. BY

JOB NO.
PROJECT
SUBJECT Domestic Cycle Coal

CALCULATED PARAMETERS (CONTINUED)

$AH_2O = CHUM * 7.709 * 0.1208 * 20.9/(20.9 - GTO_2)$
$= 0.0037 * 7.709 * 0.1208 * 20.9/(20.9 - 15.02)$
$= 0.0122 (NH_2O/lb\ Fuel)$

$GTWWET = GTWDRY + 0.1193 + (WXJ/18) + AH_2O$
$= 1.8366 + 0.1193 + (0.508/18) + 0.0122$
$= 1.9963 (NFGW/lb\ Fuel)$

$DBWWET = DBWDRY + 0.1193 + (GTFFI/(GTFFI + DBFFI))(WXJ/18 + AH_2O)$
$= 1.3122 + 0.1193 + (6875/(6875 + 2337))(0.508/18 + 0.0122)$
$= 1.4617 (NFGW/lb\ Fuel)$

$GTBWS = 1 - (GTWDRY/GTWWET)$
$= 1 - (1.8366/1.9963)$
$= 0.08$ (FRACTION)

$DBBWS = 1 - (DBWDRY/DBWWET)$
$= 1 - (1.3122/1.4617)$
$= 0.1023$ (FRACTION)

$GTNO_X = NGTNO_X/(1 - GTBWS)$
$= 55.31/(1 - 0.08)$
$= 60.12 ppm\ NO_X$ (DRY)

$DBNO_X = WDBNO_X/(1 - DBBWS)$
$52.17/(1 - 0.1023)$
$= 58.12 ppm\ NO_X$ (DRY)

$FGTNO_X = GTNO_X * 1.1929E-7 * 8592 * 20.9/(20.9 - GTO_2)$
$= 60.1 * 1.1929E-7 * 8592 * 20.9/(20.9 - 15.02)$
$= 0.2489 (lb/MBtu)$

$FDBNO_X = DBNO_X * 1.1929E-7 * 8592 * 20.9/(20.9 - DBO_2)$
$= 58.1 * 1.1929E-7 * 8592 * 20.9/(20.9 - 12.67)$
$= 0.1512 (lb/MBtu)$

GCA CORPORATION
Technology Division
GCA

213 Burlington Road
Bedford, Massachusetts 01730
Telephone 617 275-5444
Telex 92 3339

SHEET 4 OF 5
BY JMF
DATE 3/5/84
CH'K. BY KWP
DATE CH'K. 3/6/84
B'K. CH'K. BY

JOB NO.
PROJECT
SUBJECT Sample Calc Cont

CALCULATED PARAMETERS

$EFGTNO_X = FGTNOx * GTFFI * 60 * 1037E-6$
$= 0.2189 \cdot 6875 \cdot 60 \cdot 1.037E-6 = 93.64$ (lb/hr)

$EFDBNO_X = FDBNOx * (DBFFI + GTFFI) * 1037E-6$
$= 0.1512 \cdot (2337 + 6875) * 1.037E-6 \cdot 60 = 86.66$ (lb/hr)

$DBMW = (0.32 * DBO_2) + (0.44 * DBCO_2) + [0.28(100 - (DBO_2 + DBCO_2))]$
$= (0.32 \cdot 12.67) + (0.44 \cdot 4.76) + [0.28(100 - (12.67 + 4.76))] = 29.29$ (lb/lbmole)

$DBVS = [DBDP * (DBTEMP + 460)/(ACPBAR * DBMW)]^{1/2} * 85.49 * 0.84$

$[0.537 \cdot (301.1 + 460)/(30.32 \cdot 29.27)]^{1/2} * 85.49 * 0.84 = 48.73$ (ft/sec)

$DBQS = 60(1 - DBBWS) * 103.9 * DBVS * [520/(460 + DBTEMP) * (ACPBAR/29.92)]$

$= 60(1 - 0.1023) * 103.9 * 48.73 * [520/(460 + 301.1)] * [30.32/29.92]$

$= 188809$ (dscfm)

$GTQS = DBQS + (DBFFI * 1.029)$
$= 188809 + (2337 \cdot 1.029) = 191214$ (dscfm)

$EQGTNO_X = GTNO_X * (46.0/385E6) * GTQS * 60$
$= 60.12 * (46.0/385E6) * 191214 * 60 = 82.41$ (lb/hr)

$EQDBNO_X = DBNO_X * (46.0/385E6) * DBQS * 60$
$= 58.12 * (46.0/385E6) * 188809 * 60 = 78.67$ (lb/hr)

GCA CORPORATION
Technology Division
GCA

213 Burlington Road
Bedford, Massachusetts 01730
Telephone 617-275-5444
Telex 92-3339

SHEET 5 OF 5
BY TMF
DATE 3/5/84
CH'K. BY [illegible]
DATE CH'K. 3/6/84
B'K. CH'K. BY

JOB NO.
PROJECT
SUBJECT Sample Calc. Cont

(CALCULATED PARAMETERS (CONTINUED))

$$DFNO_x = EFDBNO_x - EFGTNO_x$$
$$= 86.66 - 93.64 = -6.98 \ (lb/hr)$$

$$DQNO_x = EQDBNO_x - EQGTNO_x$$
$$78.67 - 82.41 = -3.74 \ (lb/hr)$$

GCA CORPORATION
Technology Division
GCA

SHEET 1 OF 1
BY [illegible]
DATE [illegible]
CH'K. BY [illegible]
DATE CH'K. [illegible]
B'K. CH'K. BY

JOB NO. [illegible]
PROJECT [illegible]
SUBJECT [illegible]

$GTNDRY = 0.5235 * 20.9/(20.9 - GTO2)$

$= 0.5235 * 20.9/(20.9 - 15.02) = 1.8607$ (moles/lb fuel)

$DBNDRY = 0.5235 * 20.9/(20.9 - DBO2)$

$= 0.5235 * 20.9/(20.9 - 12.67) = 1.3294$ (moles/lb fuel)

$AH2O = CHUM * 7.709 * 0.1203 * 20.9/(20.9 - GTO2)$

$= 0.0037 * 7.709 * 0.1203 * 20.9/(20.9 - 15.02)$

$= 0.0122$ (moles/lb fuel)

$GTNWET = GTNDRY + 0.1193 + (WXS/18) + AH2O$

$= 1.8607 + 0.1193 + (0.500/18) + 0.0122 = 2.0204$ (moles/lb fuel)

$BNWET = DBNDRY + 0.1193 + (GTFFI/(GTFFI + DBFFI))$

$(WXS/18 + AH_2O)$

$1.3294 + 0.1193 + (6875/(6875 + 2337))$

$(0.500/18 + 0.0122) = 1.4789$ moles/lb fuel

$GTBWS = 1 - (GTNDRY/GTNWET)$

$1 - (1.8607/2.0204) = 0.079$ (FRAC)

$DBBWS = 1 - (DBNDRY/DBNWET)$

$1 - (1.3294/1.4789) = 0.1011$ (FRAC)

$GTNOX = WGTNOX/(1 - GTBWS)$

$55.31/(1 - 0.079) = 60.05$ (ppm $NO_x$ dry)

$DB\ NOX = WDBNOX/(1 - DBBWS)$

$52.17/(1 - 0.1011) = 58.04$ (ppm $NO_x$ dry)

GCA CORPORATION
Technology Division
213 Burlington Road
Bedford, Massachusetts 01730
Telephone 617 275 5444
Telex 92 3339

SHEET 2 OF 4
BY
DATE 11/1/89
JOB NO.
PROJECT
CH'K. BY O'BRIEN
SUBJECT
DATE CH'K. 11/9/89
B'K. CH'K. BY

ISONOX = GTNOX * (5.9/(20.9-GTO2)) * ((CPBAR/14.7)**0.5
* EXP(19 * (CHUM - 0.00633)) * ((288/(CTIM)) **
1.53

60.05 * (5.9/20.9 - 15.02) * ((30.32/29.92)
** 0.5 * EXP(19 * (0.0037 - 0.00633))
* ((288/291.9) ** 1.53 (0.9361)
= 56.3 (ppm @ 15% $O_2$ ISO conditions)

FGTNOX = GTNOX * 1.194E-7 * 8221 * 20.9/(20.9 - GTO2)
= 60.05 * 1.194E-7 * 8221 * 20.9/(20.9 - 15.02)
= 0.2095 (lb/MBtu)

FDBNOX = DBNOX * 1.194E-7 * 8221 * 20.9/(20.9 - DBO2)
= 58.04 * 1.194E-7 * 8221 * 20.9/(20.9 - 12.67)
= 0.1447 (lb/MBtu)

FCGTNOX = GTNOX * 1.194E-7 * 1023 * 100/GTCO2
= 60.05 * 1.194E-7 * 1023 * 100/3.52
= 0.2084 (lb/MBtu)

FCDBNOX = DBNOX * 1.194E-7 * 1023 * 100/DBCO2
= 58.04 * 1.194E-7 * 1023 * 100/4.76
= 0.1489 (lb/MBtu)

GCA CORPORATION
Technology Division
GCA

213 Burlington Road
Bedford, Massachusetts 01730
Telephone: 617 275 5444
Telex: 92 3399

SHEET ____ OF ____
BY ____
DATE ____
CH'K. BY C. BAKER
DATE CH'K. 9/17/79
B'K. CH'K. BY ____

JOB NO. ____
PROJECT ____
SUBJECT ____

EFGTNOx = FGTNOx * GTFFI * 60 * 1037E-6

= 0.2095 * 6875 * 60 * 1037E-6

= 89.62 (lb/hr)

EFDBNOx = FDBNOx * (DBFFI + GTFFI) * 60 * 1037E-6

= 0.1447 * (2331 + 6875) * 1037E-6 * 60

= 82.94 (lb/hr)

EFCGTNOx = FCGTNOx * GTFFI * 60 * 1037E-6

= 0.2084 * 6875 * 60 * 1037E-6

= 89.15 (lb/hr)

EFCDBNOx = FCDBNOx * (GTFFI + DBFFI) * 60 * 1037E-6

= 0.1489 * (6875 + 2337) * 60 * 1037E-6

= 85.35 (lb/hr)

DBmw = 29.29 (lb/lb mole)

DBVS = 48.73 (ft/sec)

DBQS = 60 (1 - DBBWS) * 103.9 * DBVS *
[528/460 + DBTEMP) * (ACPBAR/29.92)]

= 60 (1 - 0.1011) * 103.9 * 48.73 *
[528/(460 + 301.1) * (30.32/29.92)]

= 191970 (dscfm)

GCA CORPORATION
Technology Division
GCA
213 Burlington Road
Bedford, Massachusetts 01730
Telephone 617 275 5444
Telex 92 3339

SHEET 1 OF 1
BY
DATE
CH'K. BY
DATE CH'K.
B'K. CH'K. BY

JOB NO.
PROJECT
SUBJECT

GTQS = DBQS + (DBFFI * 1.025)
= 191970 + (2337 * 1.025)
= 194366 (dscfm)

EQGTNOX = GTNOX * (46.0/385.356) * GTQS * 60
= 60.05 * (46.0/385.356) * 194366 * 60
= 83.61 (lb/hr)

EQDBNOX = DBNOX * 46.0/385.356 * DBQS * 60
= 58.04 * 46.0/385.356 * 60 * 191970
= 79.81 (lb/hr)

DFNOX = EFDBNOX - EFGTNOX
= 82.94 - 89.62 = -6.68 lb/hr

DCNOX = EFCDBNOX - EFCGTNOX
= 85.35 - 89.15 = -3.8 lb/hr

DQNOX = EQDBNOX - EQGTNOX
= 79.81 - 83.61 = -3.8 lb/hr

SCA/TECHNOLOGY DIVISION

CROWN ZELLERBACH
DUCT BURNER INLET NOX DATA SUMMARY

| DAY | TIME | NOX PPM WET | NOX PPM DRY | NOX ISO | NOX EMISSIONS FD METHOD LB/MBTU | NOX EMISSIONS FD METHOD LB/HR | NOX EMISSIONS FC METHOD LB/MBTU | NOX EMISSIONS FC METHOD LB/HR | NOX EMISSIONS CS METHOD TRANS LB/HR | NOX EMISSIONS CS METHOD TRAV LB/HR | TEST COND |
|---|---|---|---|---|---|---|---|---|---|---|---|
| 15 | 1400 | 26 | 25 | 45 | 0.159 | 29.6 | 0.175 | 31.7 | 39.1 | . | . |
| 15 | 1415 | 26 | 26 | 46 | 0.157 | 28.4 | 0.174 | 31.5 | 38.6 | . | . |
| 15 | 1430 | 25 | 28 | 46 | 0.157 | 32.7 | 0.173 | 36.1 | 39.8 | . | . |
| 15 | 1445 | 26 | 27 | 45 | 0.154 | 32.1 | 0.170 | 35.4 | 37.9 | 17.4 | 8 |
| 15 | 1900 | 26 | 27 | 45 | 0.154 | 32.2 | 0.173 | 36.1 | 38.7 | 17.5 | 8 |
| 15 | 1915 | 26 | 28 | 46 | 0.155 | 32.4 | 0.177 | 37.0 | 36.3 | 17.8 | 8 |
| 15 | 1930 | 27 | 26 | 46 | 0.156 | 32.6 | 0.177 | 37.0 | 34.6 | 17.9 | 8 |
| 15 | 1945 | 26 | 29 | 45 | 0.154 | 32.2 | 0.173 | 36.1 | 31.9 | 17.6 | 8 |
| 15 | 2000 | 26 | 26 | 45 | 0.154 | 32.3 | 0.172 | 36.0 | 31.8 | 17.5 | 8 |
| 15 | 2015 | 27 | 28 | 45 | 0.155 | 32.4 | 0.173 | 36.4 | 32.9 | 17.8 | 8 |
| 15 | 2030 | 26 | 25 | 45 | 0.153 | 32.2 | 0.171 | 35.8 | 32.9 | 17.7 | 8 |
| 15 | 2045 | 26 | 29 | 45 | 0.153 | 32.2 | 0.171 | 35.9 | 32.2 | 17.7 | 8 |
| 15 | 2100 | 26 | 28 | 45 | 0.153 | 32.6 | 0.174 | 37.1 | 23.1 | 17.7 | 8 |
| 15 | 2115 | 27 | 28 | 46 | 0.157 | 33.4 | 0.184 | 39.1 | 23.7 | 18.1 | 8 |
| 15 | 2130 | 26 | 30 | 47 | 0.162 | 34.4 | 0.191 | 40.7 | 23.8 | 19.1 | 8 |
| 15 | 2145 | 29 | 30 | 48 | 0.164 | 34.5 | 0.194 | 41.2 | 27.4 | 19.4 | 8 |
| 15 | 2200 | 28 | 30 | 47 | 0.161 | 34.4 | 0.182 | 38.9 | 24.5 | 19.0 | 8 |
| 15 | 2215 | 28 | 29 | 46 | 0.158 | 33.5 | 0.177 | 37.9 | 19.0 | 18.7 | 8 |
| 15 | 2230 | 27 | 29 | 45 | 0.156 | 33.4 | 0.176 | 36.9 | 18.4 | 18.4 | 8 |
| 15 | 2245 | 26 | 27 | 44 | 0.151 | 32.4 | 0.169 | 36.1 | 17.1 | 17.6 | 8 |
| 15 | 2300 | 28 | 30 | 47 | 0.162 | 35.1 | 0.179 | 38.8 | 33.2 | 19.1 | 8 |
| 15 | 2315 | 29 | 30 | 48 | 0.165 | 35.8 | 0.183 | 39.6 | 33.6 | 19.4 | 8 |
| 16 | 15 | 33 | 35 | 51 | 0.177 | 40.5 | 0.199 | 45.5 | 39.9 | . | 9 |
| 16 | 30 | 33 | 35 | 52 | 0.178 | 41.1 | 0.192 | 45.7 | 42.3 | . | 9 |
| 16 | 45 | 33 | 35 | 51 | 0.177 | 40.8 | 0.197 | 45.3 | 46.0 | . | 9 |
| 16 | 100 | 33 | 35 | 52 | 0.178 | 39.6 | 0.197 | 43.8 | 43.6 | . | 9 |
| 16 | 115 | 33 | 35 | 51 | 0.177 | 39.3 | 0.196 | 43.6 | 46.2 | . | 9 |
| 16 | 130 | 33 | 35 | 51 | 0.176 | 39.2 | 0.196 | 43.6 | 51.5 | . | 9 |
| 16 | 145 | 33 | 35 | 51 | 0.177 | 39.4 | 0.196 | 43.7 | 50.9 | . | 9 |
| 16 | 200 | 33 | 35 | 52 | 0.178 | 40.7 | 0.197 | 45.2 | 54.5 | . | 9 |
| 16 | 215 | 34 | 36 | 52 | 0.181 | 41.4 | 0.200 | 45.8 | 47.8 | . | 9 |
| 16 | 230 | 34 | 36 | 52 | 0.180 | 41.2 | 0.199 | 45.6 | 49.9 | . | 9 |
| 16 | 245 | 33 | 35 | 51 | 0.177 | 40.6 | 0.197 | 45.1 | 35.7 | . | 9 |
| 16 | 300 | 33 | 35 | 52 | 0.177 | 39.9 | 0.197 | 44.3 | 37.8 | . | 9 |
| 16 | 315 | 33 | 35 | 52 | 0.177 | 39.8 | 0.195 | 43.9 | 39.8 | . | 9 |
| 16 | 330 | 33 | 35 | 53 | 0.180 | 40.6 | 0.195 | 43.9 | 42.7 | . | 9 |
| 16 | 345 | 33 | 35 | 52 | 0.180 | 40.4 | 0.195 | 43.8 | 50.3 | . | 9 |
| 16 | 400 | 32 | 35 | 52 | 0.177 | 37.5 | 0.195 | 40.9 | 55.0 | . | 9 |
| 16 | 415 | 33 | 35 | 52 | 0.178 | 37.8 | 0.193 | 41.3 | 53.9 | . | 9 |
| 16 | 430 | 33 | 35 | 52 | 0.178 | 37.9 | 0.195 | 41.5 | 52.3 | . | 9 |
| 16 | 445 | 34 | 36 | 53 | 0.183 | 38.7 | 0.199 | 42.5 | 51.1 | . | 9 |
| 16 | 500 | 33 | 35 | 52 | 0.180 | 44.4 | 0.196 | 48.2 | 51.1 | . | 9 |
| 16 | 515 | 33 | 35 | 52 | 0.176 | 43.9 | 0.194 | 47.8 | 52.2 | . | 9 |
| 16 | 530 | 33 | 35 | 52 | 0.176 | 43.9 | 0.194 | 47.8 | 53.1 | . | 9 |
| 16 | 545 | 33 | 35 | 52 | 0.179 | 44.0 | 0.195 | 48.3 | 53.7 | . | 9 |
| 16 | 600 | 33 | 35 | 53 | 0.179 | 46.3 | 0.196 | 47.4 | 53.6 | . | 9 |
| 16 | 615 | 53 | 59 | 63 | 0.217 | 96.9 | 0.225 | 100 | 105 | . | . |
| 16 | 630 | 40 | 44 | 41 | 0.142 | 63.5 | 0.148 | 66.0 | 91.2 | . | . |

. REPRESENTS MISSING DATA

GCA/TECHNOLOGY DIVISION

CROWN ZELLERBACH
DUCT BURNER INLET NOX DATA SUMMARY

| DAY | TIME | NOX PPM WET | NOX PPM DRY | NOX ISO | NOX EMISSIONS FD METHOD LB/MBTU | NOX EMISSIONS FD METHOD LB/HR | NOX EMISSIONS FC METHOD LB/MBTU | NOX EMISSIONS FC METHOD LB/HR | NOX EMISSIONS GS METHOD TRANS LB/HR | NOX EMISSIONS GS METHOD TRAV LB/HR | TEST COND |
|---|---|---|---|---|---|---|---|---|---|---|---|
| 16 | 645 | 39 | 43 | 40 | 0.140 | 62.2 | 0.145 | 64.8 | 83.5 | . | . |
| 16 | 700 | 37 | 41 | 39 | 0.134 | 62.8 | 0.140 | 65.2 | 75.6 | . | . |
| 16 | 715 | 37 | 41 | 38 | 0.132 | 61.7 | 0.137 | 64.2 | 74.6 | . | 3 |
| 16 | 730 | 36 | 40 | 38 | 0.132 | 61.4 | 0.137 | 64.0 | 71.6 | . | 3 |
| 16 | 745 | 36 | 40 | 38 | 0.131 | 61.4 | 0.137 | 63.9 | 69.4 | . | 3 |
| 16 | 800 | 36 | 40 | 37 | 0.130 | 61.2 | 0.135 | 63.9 | 67.9 | . | 3 |
| 16 | 815 | 36 | 40 | 38 | 0.130 | 61.4 | 0.136 | 64.1 | 65.6 | . | 3 |
| 16 | 830 | 35 | 39 | 37 | 0.127 | 60.1 | 0.133 | 62.8 | 64.9 | . | 3 |
| 16 | 845 | 35 | 39 | 36 | 0.126 | 59.5 | 0.132 | 62.4 | 63.4 | . | 3 |
| 16 | 900 | 35 | 39 | 36 | 0.127 | 56.5 | 0.133 | 59.1 | 62.8 | . | 3 |
| 16 | 915 | 35 | 39 | 37 | 0.128 | 56.9 | 0.134 | 55.5 | 66.8 | . | . |
| 16 | 930 | 35 | 39 | 37 | 0.128 | 56.8 | 0.134 | 59.5 | 64.3 | . | . |
| 16 | 1100 | 33 | 36 | 42 | 0.148 | 63.2 | 0.157 | 67.3 | 58.1 | . | 1 |
| 16 | 1100 | 33 | 36 | 42 | 0.148 | 63.2 | 0.157 | 67.3 | 58.0 | . | 1 |
| 16 | 1115 | 33 | 36 | 41 | 0.146 | 62.6 | 0.157 | 67.1 | 58.4 | . | . |
| 16 | 1130 | 34 | 37 | 42 | 0.149 | 63.8 | 0.162 | 69.1 | 60.0 | . | . |
| 16 | 1145 | 36 | 40 | 38 | 0.134 | 57.1 | 0.144 | 61.8 | 63.7 | . | . |
| 16 | 1200 | 35 | 39 | 36 | 0.131 | 59.9 | 0.142 | 65.3 | 62.1 | . | . |
| 16 | 1215 | 36 | 40 | 37 | 0.133 | 61.2 | 0.147 | 67.5 | 59.1 | . | . |
| 16 | 1230 | 36 | 40 | 37 | 0.134 | 61.4 | 0.149 | 68.2 | 58.4 | . | . |
| 16 | 1245 | 36 | 40 | 36 | 0.132 | 60.6 | 0.147 | 67.2 | 56.8 | . | . |
| 16 | 1300 | 36 | 39 | 35 | 0.132 | 60.4 | 0.146 | 67.9 | 56.1 | . | . |
| 16 | 1645 | 40 | 44 | 40 | 0.147 | 65.5 | 0.157 | 71.3 | 66.6 | 83.1 | 3 |
| 16 | 1700 | 39 | 43 | 39 | 0.142 | 65.3 | 0.154 | 71.1 | 62.2 | 80.4 | 3 |
| 16 | 1715 | 37 | 41 | 38 | 0.136 | 62.8 | 0.151 | 69.5 | 60.2 | 77.5 | 3 |
| 16 | 1730 | 39 | 43 | 39 | 0.142 | 65.2 | 0.159 | 73.2 | 63.5 | 80.5 | 3 |
| 16 | 1745 | 37 | 41 | 38 | 0.136 | 62.8 | 0.152 | 70.1 | 59.7 | 77.6 | 3 |
| 16 | 1800 | 36 | 40 | 38 | 0.133 | 61.5 | 0.147 | 68.0 | 57.5 | 76.0 | 3 |
| 16 | 1815 | 37 | 41 | 38 | 0.138 | 62.9 | 0.149 | 68.0 | 53.3 | 77.5 | 3 |
| 16 | 1830 | 37 | 41 | 38 | 0.134 | 62.0 | 0.146 | 67.4 | 49.5 | 76.5 | 3 |
| 16 | 1845 | 35 | 39 | 37 | 0.130 | 59.9 | 0.141 | 65.2 | 55.6 | 73.9 | 3 |
| 16 | 1900 | 36 | 40 | 37 | 0.131 | 60.4 | 0.143 | 66.1 | 59.4 | 74.5 | 3 |
| 16 | 1915 | 36 | 40 | 38 | 0.132 | 61.2 | 0.146 | 67.6 | 58.9 | 75.5 | 3 |
| 16 | 1930 | 35 | 39 | 37 | 0.129 | 59.5 | 0.140 | 64.5 | 57.4 | 73.2 | 3 |
| 16 | 1945 | 35 | 39 | 37 | 0.130 | 60.2 | 0.140 | 64.6 | 56.0 | 73.4 | 3 |
| 16 | 2000 | 35 | 39 | 37 | 0.133 | 61.8 | 0.142 | 65.7 | 53.5 | 74.1 | 3 |
| 16 | 2015 | 34 | 38 | 37 | 0.129 | 59.7 | 0.135 | 62.9 | 53.1 | 71.7 | 3 |
| 16 | 2030 | 35 | 38 | 37 | 0.130 | 60.1 | 0.138 | 64.2 | 53.7 | 72.5 | 3 |
| 16 | 2115 | 36 | 40 | 38 | 0.134 | 63.1 | 0.145 | 68.5 | 56.6 | . | 2 |
| 16 | 2130 | 37 | 41 | 39 | 0.136 | 64.0 | 0.147 | 69.4 | 55.2 | . | 2 |
| 16 | 2145 | 36 | 40 | 38 | 0.134 | 63.5 | 0.145 | 68.4 | 55.0 | . | 2 |
| 16 | 2200 | 36 | 40 | 38 | 0.134 | 54.5 | 0.144 | 58.6 | 55.4 | . | 2 |
| 16 | 2215 | 37 | 41 | 39 | 0.136 | 55.1 | 0.146 | 59.2 | 55.9 | . | . |
| 16 | 2230 | 37 | 41 | 39 | 0.137 | 55.7 | 0.147 | 59.8 | 57.2 | . | . |
| 16 | 2245 | 37 | 41 | 39 | 0.137 | 55.6 | 0.147 | 59.5 | 56.6 | . | . |
| 16 | 2300 | 23 | 25 | 33 | 0.117 | 25.4 | 0.130 | 28.4 | 29.4 | . | . |
| 16 | 2315 | 16 | 17 | 27 | 0.094 | 20.4 | 0.104 | 22.7 | 18.3 | . | 1 |
| 16 | 2330 | 16 | 17 | 27 | 0.094 | 20.6 | 0.105 | 23.0 | 17.6 | . | 1 |

GCA/TECHNOLOGY DIVISION

CROWN ZELLERBACH
DUCT BURNER INLET NOX DATA SUMMARY

| DAY | TIME | NOX PPM WET | NOX PPM DRY | NOX ISO | NOX EMISSIONS FD METHOD LB/MBTU | NOX EMISSIONS FD METHOD LB/HR | NOX EMISSIONS FC METHOD LB/MBTU | NOX EMISSIONS FC METHOD LB/HR | NOX EMISSIONS QS METHOD TRANS LB/HR | NOX EMISSIONS QS METHOD TRAV LB/HR | TEST COND |
|---|---|---|---|---|---|---|---|---|---|---|---|
| 16 | 2345 | 16 | 18 | 27 | 0.095 | 20.7 | 0.106 | 23.1 | 16.7 | . | 1 |
| 17 | 0 | 16 | 17 | 27 | 0.095 | 20.6 | 0.105 | 23.0 | 16.0 | . | 1 |
| 17 | 15 | 16 | 17 | 27 | 0.094 | 20.5 | 0.105 | 22.8 | 15.2 | . | . |
| 17 | 30 | 17 | 18 | 27 | 0.095 | 20.7 | 0.106 | 23.1 | 15.2 | . | . |
| 17 | 45 | 16 | 18 | 27 | 0.095 | 20.6 | 0.106 | 23.0 | 15.2 | . | . |
| 17 | 100 | 17 | 18 | 28 | 0.097 | 28.6 | 0.108 | 31.9 | 15.4 | . | . |
| 17 | 115 | 28 | 30 | 38 | 0.133 | 39.4 | 0.145 | 43.0 | 29.3 | . | . |
| 17 | 130 | 30 | 32 | 40 | 0.139 | 41.2 | 0.153 | 45.2 | 32.4 | . | . |
| 17 | 145 | 31 | 33 | 41 | 0.144 | 42.4 | 0.157 | 46.5 | 29.1 | . | . |
| 17 | 200 | 26 | 28 | 36 | 0.128 | 30.5 | 0.141 | 33.6 | 23.7 | . | . |
| 17 | 215 | 21 | 22 | 31 | 0.109 | 26.0 | 0.120 | 28.7 | 17.4 | . | 1 |
| 17 | 230 | 20 | 22 | 31 | 0.109 | 25.9 | 0.120 | 28.5 | 16.5 | . | 1 |
| 17 | 245 | 20 | 21 | 30 | 0.107 | 25.5 | 0.118 | 28.1 | 17.8 | . | 1 |
| 17 | 300 | 20 | 21 | 31 | 0.108 | 25.7 | 0.119 | 28.2 | 15.3 | . | 1 |
| 17 | 315 | 21 | 22 | 32 | 0.112 | 26.6 | 0.123 | 29.2 | 13.7 | . | 1 |
| 17 | 330 | 20 | 21 | 30 | 0.107 | 25.3 | 0.117 | 27.8 | 12.9 | . | 1 |
| 17 | 345 | 20 | 21 | 31 | 0.107 | 25.5 | 0.118 | 27.9 | 7.5 | . | 1 |
| 17 | 400 | 20 | 21 | 30 | 0.106 | 25.2 | 0.116 | 27.6 | 8.8 | . | 1 |
| 17 | 415 | 19 | 21 | 30 | 0.105 | 24.9 | 0.115 | 27.2 | 14.9 | . | 1 |
| 17 | 430 | 19 | 21 | 30 | 0.105 | 24.9 | 0.114 | 27.1 | 16.7 | . | 1 |
| 17 | 445 | 19 | 21 | 30 | 0.105 | 25.0 | 0.115 | 27.2 | 16.9 | . | 1 |
| 17 | 500 | 19 | 21 | 30 | 0.106 | 25.8 | 0.115 | 29.2 | 16.8 | . | 1 |
| 17 | 515 | 19 | 21 | 30 | 0.105 | 26.7 | 0.114 | 29.0 | 16.3 | . | . |
| 17 | 530 | 19 | 20 | 30 | 0.104 | 26.3 | 0.112 | 28.5 | 15.9 | . | . |
| 17 | 545 | 23 | 24 | 34 | 0.117 | 29.6 | 0.125 | 31.6 | 22.5 | . | . |
| 17 | 600 | 24 | 26 | 35 | 0.121 | 55.4 | 0.130 | 59.7 | 25.0 | . | . |
| 17 | 615 | 39 | 42 | 44 | 0.151 | 69.1 | 0.158 | 72.5 | 45.1 | . | . |
| 17 | 630 | 38 | 42 | 40 | 0.139 | 63.9 | 0.147 | 67.4 | 58.3 | . | . |
| 17 | 645 | 37 | 41 | 39 | 0.136 | 62.4 | 0.144 | 65.8 | 55.6 | . | . |
| 17 | 700 | 36 | 40 | 39 | 0.135 | 63.8 | 0.143 | 67.5 | 39.3 | . | . |
| 17 | 715 | 36 | 40 | 38 | 0.133 | 62.9 | 0.141 | 66.6 | 40.9 | . | 3 |
| 17 | 730 | 36 | 39 | 38 | 0.133 | 62.7 | 0.140 | 66.3 | 44.8 | . | 3 |
| 17 | 745 | 36 | 39 | 38 | 0.132 | 62.5 | 0.140 | 66.0 | 61.8 | . | 3 |
| 17 | 800 | 36 | 40 | 36 | 0.134 | 63.6 | 0.142 | 67.0 | 65.7 | . | 3 |
| 17 | 815 | 36 | 40 | 38 | 0.136 | 63.4 | 0.140 | 65.4 | 64.6 | . | . |
| 17 | 1000 | 37 | 41 | 37 | 0.138 | 61.9 | 0.147 | 65.7 | 67.4 | . | . |
| 17 | 1015 | 36 | 40 | 36 | 0.136 | 61.0 | 0.145 | 65.0 | 66.5 | . | . |
| 17 | 1030 | 52 | 56 | 51 | 0.191 | 86.6 | 0.203 | 92.1 | 100 | . | . |
| 17 | 1045 | 103 | 111 | 104 | 0.392 | 177 | 0.413 | 187 | 196 | . | . |
| 17 | 1100 | 104 | 111 | 101 | 0.391 | 175 | 0.405 | 182 | 190 | . | . |
| 17 | 1115 | 104 | 112 | 102 | 0.392 | 175 | 0.406 | 182 | 186 | . | . |
| 17 | 1130 | 105 | 113 | 102 | 0.398 | 178 | 0.414 | 185 | . | . | . |
| 17 | 1145 | 107 | 115 | 104 | 0.403 | 181 | 0.419 | 188 | . | . | . |
| 17 | 1200 | 104 | 112 | 101 | 0.394 | 163 | 0.406 | 168 | . | . | . |
| 17 | 1215 | 104 | 112 | 101 | 0.395 | 163 | 0.408 | 169 | . | . | . |
| 17 | 1230 | 56 | 61 | 55 | 0.214 | 86.5 | 0.220 | 91.0 | 84.7 | . | . |
| 17 | 1245 | 35 | 38 | 34 | 0.134 | 55.5 | 0.141 | 58.1 | 55.1 | . | . |
| 17 | 1300 | 35 | 38 | 38 | 0.149 | 61.6 | 0.157 | 64.7 | 54.5 | . | . |

. REPRESENTS MISSING DATA

GCA/TECHNOLOGY DIVISION

CROWN ZELLERBACH
DUCT BURNER INLET NOX DATA SUMMARY

| DAY | TIME | NOX PPM WET | NOX PPM DRY | NOX ISO | NOX EMISSIONS FC METHOD LB/MBTU | NOX EMISSIONS FC METHOD LB/HR | NOX EMISSIONS FC METHOD LB/MBTU | NOX EMISSIONS FC METHOD LB/HR | NOX EMISSIONS NS METHOD TRANS LB/HR | NOX EMISSIONS NS METHOD TRAV LB/HR | TEST COND |
|---|---|---|---|---|---|---|---|---|---|---|---|
| 17 | 1315 | 36 | 39 | 39 | 0.153 | 63.0 | 0.159 | 65.7 | 56.1 | . | . |
| 17 | 1330 | 36 | 39 | 39 | 0.152 | 62.7 | 0.158 | 65.2 | 55.6 | . | . |
| 17 | 1345 | 41 | 44 | 44 | 0.171 | 70.6 | 0.178 | 73.4 | 63.4 | . | . |
| 17 | 1400 | 79 | 84 | 85 | 0.330 | 131 | 0.347 | 137 | 121 | . | . |
| 17 | 1415 | 79 | 84 | 85 | 0.329 | 130 | 0.348 | 138 | 122 | . | . |
| 17 | 1430 | 81 | 86 | 87 | 0.336 | 133 | 0.358 | 142 | 124 | . | . |
| 17 | 1545 | 82 | 88 | 88 | 0.343 | 136 | 0.372 | 147 | 126 | . | . |
| 17 | 1600 | 70 | 75 | 75 | 0.294 | 117 | 0.319 | 127 | 108 | . | . |
| 17 | 1630 | 84 | 90 | 90 | 0.353 | 140 | 0.385 | 153 | 132 | . | . |
| 17 | 1645 | 93 | 100 | 100 | 0.389 | 154 | 0.420 | 166 | 146 | . | . |
| 17 | 1700 | 92 | 99 | 101 | 0.387 | 154 | 0.414 | 165 | 146 | . | . |
| 17 | 1715 | 92 | 99 | 101 | 0.390 | 155 | 0.416 | 165 | 145 | . | . |
| 17 | 1915 | 32 | 35 | 39 | 0.142 | 57.4 | 0.143 | 57.5 | 51.5 | . | 11 |
| 17 | 1930 | 31 | 34 | 37 | 0.137 | 55.6 | 0.138 | 56.0 | 50.0 | . | 11 |
| 17 | 1945 | 31 | 33 | 37 | 0.136 | 54.0 | 0.136 | 55.0 | 49.3 | . | 11 |
| 17 | 2000 | 31 | 33 | 39 | 0.138 | 53.5 | 0.138 | 53.6 | 50.4 | . | 11 |
| 17 | 2015 | 31 | 34 | 39 | 0.139 | 54.1 | 0.139 | 54.0 | 50.9 | . | . |
| 17 | 2030 | 32 | 35 | 40 | 0.143 | 55.5 | 0.144 | 55.9 | 52.4 | . | . |
| 17 | 2045 | 32 | 34 | 40 | 0.143 | 55.4 | 0.143 | 55.4 | 52.0 | . | . |
| 17 | 2100 | 32 | 34 | 39 | 0.141 | 56.2 | 0.142 | 56.5 | 51.8 | . | . |
| 17 | 2115 | 33 | 35 | 40 | 0.145 | 57.6 | 0.145 | 57.8 | 53.1 | . | 11 |
| 17 | 2130 | 33 | 36 | 41 | 0.148 | 58.9 | 0.148 | 59.0 | 53.5 | . | 11 |
| 17 | 2145 | 33 | 36 | 41 | 0.149 | 59.3 | 0.150 | 59.6 | 53.3 | . | 11 |
| 17 | 2200 | 33 | 36 | 42 | 0.149 | 55.4 | 0.148 | 55.1 | 52.9 | . | 11 |
| 17 | 2215 | 32 | 35 | 40 | 0.143 | 53.2 | 0.142 | 53.0 | 50.8 | . | . |
| 17 | 2230 | 31 | 34 | 39 | 0.138 | 51.4 | 0.138 | 51.4 | 49.8 | . | . |
| 17 | 2245 | 31 | 33 | 39 | 0.140 | 52.0 | 0.138 | 51.5 | 49.9 | . | . |
| 17 | 2300 | 23 | 25 | 34 | 0.119 | 27.1 | 0.119 | 27.1 | 34.2 | . | . |
| 17 | 2315 | 13 | 14 | 23 | 0.082 | 18.5 | 0.081 | 18.4 | 17.7 | . | 10 |
| 17 | 2330 | 13 | 14 | 24 | 0.083 | 18.9 | 0.081 | 18.5 | 17.9 | . | 10 |
| 17 | 2345 | 14 | 14 | 24 | 0.083 | 18.9 | 0.082 | 18.7 | 18.0 | . | 10 |
| 18 | 0 | 17 | 18 | 27 | 0.094 | 19.9 | 0.094 | 19.9 | 22.0 | . | 10 |
| 18 | 15 | 13 | 13 | 22 | 0.079 | 16.6 | 0.078 | 16.4 | 16.8 | . | . |
| 18 | 30 | 12 | 13 | 22 | 0.077 | 16.3 | 0.076 | 16.1 | 16.4 | . | . |
| 18 | 45 | 19 | 21 | 35 | 0.124 | 26.3 | 0.124 | 26.2 | 25.2 | . | . |
| 18 | 100 | 25 | 26 | 47 | 0.163 | 45.8 | 0.163 | 45.6 | 31.7 | . | . |
| 18 | 115 | 21 | 22 | 35 | 0.122 | 34.3 | 0.121 | 33.8 | 27.0 | . | . |
| 18 | 130 | 17 | 19 | 28 | 0.098 | 27.6 | 0.097 | 27.1 | 23.0 | . | . |
| 18 | 145 | 20 | 21 | 32 | 0.114 | 31.9 | 0.111 | 31.3 | 26.3 | . | . |
| 18 | 200 | 43 | 47 | 49 | 0.171 | 51.9 | 0.169 | 51.4 | 58.1 | . | . |
| 18 | 215 | 29 | 31 | 37 | 0.130 | 39.5 | 0.129 | 39.3 | 33.2 | . | . |
| 18 | 230 | 22 | 23 | 31 | 0.109 | 33.1 | 0.109 | 33.1 | 28.9 | . | . |
| 18 | 245 | 22 | 23 | 32 | 0.110 | 33.5 | 0.109 | 33.0 | 28.6 | . | . |
| 18 | 300 | 25 | 26 | 34 | 0.119 | 30.8 | 0.117 | 30.3 | 33.0 | . | . |
| 18 | 315 | 25 | 27 | 34 | 0.121 | 31.4 | 0.119 | 31.0 | 34.2 | . | . |
| 18 | 330 | 18 | 19 | 28 | 0.098 | 25.4 | 0.097 | 25.1 | 24.1 | . | . |
| 18 | 345 | 17 | 18 | 27 | 0.094 | 24.4 | 0.093 | 24.1 | 22.5 | . | . |
| 18 | 400 | 12 | 13 | 21 | 0.074 | 15.9 | 0.074 | 15.8 | 15.8 | . | . |

GCA/TECHNOLOGY DIVISION

CROWN ZELLERBACH
DUCT BURNER INLET NOX DATA SUMMARY

| DAY | TIME | NOX PPM WET | NOX PPM DRY | NOX ISO | NOX EMISSIONS FD METHOD LB/MBTU | NOX EMISSIONS FD METHOD LB/HR | NOX EMISSIONS FC METHOD LB/MBTU | NOX EMISSIONS FC METHOD LB/HR | NOX EMISSIONS QS METHOD TRANS LB/HR | NOX EMISSIONS QS METHOD TRAV LB/HR | TEST COND |
|---|---|---|---|---|---|---|---|---|---|---|---|
| 18 | 415 | 11 | 12 | 20 | 0.070 | 15.1 | 0.070 | 14.9 | 14.4 | . | 12 |
| 18 | 430 | 22 | 23 | 40 | 0.138 | 29.7 | 0.136 | 29.2 | 28.0 | . | 12 |
| 18 | 445 | 27 | 28 | 49 | 0.169 | 36.3 | 0.167 | 35.8 | 33.8 | . | 12 |
| 18 | 500 | 27 | 28 | 49 | 0.169 | 50.3 | 0.166 | 49.4 | 33.9 | . | 12 |
| 18 | 515 | 27 | 28 | 49 | 0.168 | 49.8 | 0.165 | 48.5 | 33.9 | . | . |
| 18 | 530 | 29 | 31 | 42 | 0.143 | 42.6 | 0.140 | 41.5 | 37.2 | . | . |
| 18 | 545 | 30 | 32 | 39 | 0.134 | 39.8 | 0.131 | 39.0 | 36.6 | . | . |
| 18 | 600 | 28 | 30 | 37 | 0.128 | 60.4 | 0.126 | 59.2 | 36.3 | . | . |
| 18 | 615 | 31 | 34 | 35 | 0.123 | 58.1 | 0.120 | 56.7 | 47.7 | . | . |
| 18 | 630 | 30 | 32 | 32 | 0.111 | 52.2 | 0.109 | 51.4 | 50.0 | . | . |
| 18 | 645 | 29 | 32 | 31 | 0.108 | 51.1 | 0.107 | 50.4 | 47.8 | . | . |
| 18 | 700 | 30 | 33 | 33 | 0.112 | 54.7 | 0.110 | 53.9 | 49.2 | . | . |
| 18 | 715 | 29 | 32 | 32 | 0.112 | 54.4 | 0.110 | 53.6 | 48.6 | . | 3 |
| 18 | 730 | 30 | 33 | 33 | 0.113 | 55.4 | 0.112 | 54.5 | 49.7 | . | 3 |
| 18 | 745 | 30 | 33 | 33 | 0.114 | 55.5 | 0.112 | 54.6 | 49.6 | . | 3 |
| 18 | 800 | 30 | 33 | 33 | 0.113 | 54.7 | 0.112 | 53.8 | 49.3 | . | 3 |
| 18 | 815 | 29 | 31 | 32 | 0.110 | 53.2 | 0.108 | 51.9 | 47.4 | . | 2 |
| 18 | 1145 | 38 | 42 | 40 | 0.138 | 68.7 | 0.152 | 72.3 | 62.0 | 77.9 | 2 |
| 18 | 1200 | 39 | 43 | 41 | 0.142 | 66.9 | 0.152 | 71.6 | 62.6 | 79.8 | 2 |
| 18 | 1215 | 38 | 42 | 41 | 0.141 | 66.4 | 0.151 | 71.2 | 62.0 | 79.2 | 2 |
| 18 | 1230 | 38 | 42 | 40 | 0.140 | 66.1 | 0.151 | 71.1 | 61.6 | 79.0 | 2 |
| 18 | 1245 | 39 | 43 | 41 | 0.143 | 67.4 | 0.156 | 73.3 | 63.5 | 80.3 | 2 |
| 18 | 1300 | 39 | 43 | 41 | 0.143 | 66.7 | 0.154 | 71.9 | 63.9 | 80.1 | 2 |
| 18 | 1315 | 38 | 42 | 40 | 0.140 | 65.2 | 0.151 | 70.5 | 62.8 | 78.8 | 2 |
| 18 | 1330 | 39 | 43 | 40 | 0.141 | 66.0 | 0.153 | 71.5 | 63.2 | 79.7 | 2 |
| 18 | 1345 | 39 | 43 | 40 | 0.143 | 66.8 | 0.153 | 71.5 | 63.2 | 80.6 | 2 |
| 18 | 1400 | 40 | 44 | 40 | 0.145 | 67.1 | 0.157 | 72.8 | 63.6 | 81.9 | 2 |
| 18 | 1415 | 39 | 43 | 40 | 0.145 | 66.8 | 0.156 | 72.2 | 62.9 | 81.4 | 2 |
| 18 | 1430 | 39 | 43 | 39 | 0.141 | 65.3 | 0.152 | 70.1 | 59.4 | 79.8 | 2 |
| 18 | 1445 | 39 | 43 | 40 | 0.143 | 65.9 | 0.153 | 70.8 | 60.6 | 80.4 | 2 |
| 18 | 1500 | 39 | 43 | 40 | 0.143 | 65.9 | 0.154 | 71.0 | 62.0 | 80.6 | 2 |
| 18 | 1515 | 38 | 43 | 40 | 0.142 | 65.3 | 0.152 | 70.0 | 58.6 | 79.7 | 2 |
| 18 | 1530 | 38 | 43 | 40 | 0.142 | 65.3 | 0.153 | 70.6 | 49.0 | 79.7 | 2 |
| 18 | 1545 | 39 | 43 | 41 | 0.144 | 66.1 | 0.156 | 71.7 | 44.1 | 80.8 | 2 |
| 18 | 1600 | 39 | 43 | 40 | 0.144 | 66.4 | 0.156 | 72.0 | 43.1 | 81.0 | 2 |
| 18 | 1615 | 39 | 43 | 41 | 0.145 | 66.7 | 0.158 | 72.9 | 46.4 | 81.2 | 2 |
| 18 | 1630 | 39 | 43 | 40 | 0.143 | 65.7 | 0.156 | 71.9 | 61.2 | 80.1 | 2 |
| 18 | 1715 | 37 | 41 | 39 | 0.136 | 63.7 | 0.149 | 69.7 | 58.7 | . | 2 |
| 18 | 1730 | 37 | 41 | 39 | 0.137 | 64.0 | 0.150 | 70.2 | . | . | 2 |
| 18 | 1800 | 37 | 41 | 39 | 0.138 | 64.3 | 0.147 | 68.7 | . | . | 2 |
| 18 | 1815 | 38 | 42 | 40 | 0.138 | 64.6 | 0.146 | 68.2 | . | . | 2 |
| 18 | 1830 | 38 | 42 | 40 | 0.138 | 64.7 | 0.145 | 68.0 | . | . | 2 |
| 18 | 1845 | 37 | 41 | 40 | 0.138 | 64.6 | 0.145 | 67.8 | . | . | 2 |
| 18 | 1900 | 37 | 41 | 40 | 0.139 | 65.1 | 0.145 | 68.4 | . | . | 2 |
| 18 | 1915 | 37 | 41 | 39 | 0.137 | 64.5 | 0.144 | 68.1 | . | . | 2 |
| 18 | 1930 | 37 | 41 | 39 | 0.137 | 64.8 | 0.144 | 67.7 | . | . | 2 |
| 18 | 1945 | 37 | 41 | 39 | 0.137 | 64.5 | 0.143 | 67.7 | . | . | 2 |
| 18 | 2000 | 37 | 41 | 39 | 0.137 | 63.8 | 0.143 | 66.9 | . | . | 2 |

. REPRESENTS MISSING DATA

GCA/TECHNOLOGY DIVISION

CROWN ZELLERBACH
DUCT BURNER INLET NOX DATA SUMMARY

| DAY | TIME | NOX PPM WET | NOX PPM DRY | NOX ISO | NOX EMISSIONS FC METHOD LB/MBTU | NOX EMISSIONS FC METHOD LB/HR | NOX EMISSIONS FC METHOD LB/MBTU | NOX EMISSIONS FC METHOD LB/HR | NOX EMISSIONS GS METHOD TRANS LB/HR | NOX EMISSIONS GS METHOD TRAV LB/HR | TEST COND |
|---|---|---|---|---|---|---|---|---|---|---|---|
| 18 | 2015 | 37 | 41 | 40 | 0.138 | 64.3 | 0.143 | 67.5 | . | . | 2 |
| 18 | 2030 | 37 | 41 | 39 | 0.136 | 63.6 | 0.143 | 66.8 | . | . | 2 |
| 18 | 2045 | 39 | 43 | 41 | 0.143 | 66.6 | 0.150 | 70.0 | . | . | 2 |
| 18 | 2100 | 38 | 42 | 40 | 0.139 | 64.6 | 0.145 | 67.7 | . | . | 2 |
| 18 | 2115 | 38 | 42 | 40 | 0.141 | 65.5 | 0.147 | 68.5 | . | . | 2 |
| 18 | 2130 | 37 | 41 | 39 | 0.136 | 63.5 | 0.143 | 66.7 | . | . | 2 |
| 18 | 2145 | 37 | 41 | 39 | 0.137 | 63.7 | 0.144 | 66.9 | . | . | 2 |
| 18 | 2200 | 38 | 42 | 40 | 0.139 | 59.5 | 0.146 | 62.4 | . | . | 2 |
| 18 | 2215 | 38 | 42 | 39 | 0.138 | 59.3 | 0.145 | 62.1 | . | . | . |
| 18 | 2230 | 38 | 42 | 39 | 0.138 | 59.2 | 0.145 | 62.3 | . | . | . |
| 18 | 2245 | 38 | 42 | 40 | 0.138 | 59.4 | 0.144 | 61.9 | . | . | . |
| 18 | 2300 | 30 | 32 | 38 | 0.134 | 30.4 | 0.143 | 32.6 | . | . | . |
| 18 | 2315 | 18 | 20 | 30 | 0.104 | 23.7 | 0.112 | 25.6 | . | . | . |
| 18 | 2330 | 18 | 19 | 30 | 0.104 | 23.6 | 0.111 | 25.3 | . | . | . |
| 18 | 2345 | 18 | 19 | 29 | 0.103 | 23.4 | 0.110 | 25.1 | . | . | . |
| 19 | 0 | 18 | 20 | 30 | 0.104 | 23.4 | 0.111 | 24.9 | . | . | . |
| 19 | 15 | 18 | 19 | 30 | 0.103 | 23.2 | 0.110 | 24.7 | . | . | 12 |
| 19 | 30 | 18 | 19 | 29 | 0.100 | 22.5 | 0.108 | 24.2 | . | . | 12 |
| 19 | 45 | 18 | 19 | 29 | 0.100 | 22.5 | 0.107 | 24.0 | . | . | 12 |
| 19 | 100 | 19 | 20 | 30 | 0.104 | 24.5 | 0.111 | 26.2 | . | . | 12 |
| 19 | 115 | 19 | 20 | 30 | 0.104 | 24.6 | 0.111 | 26.4 | . | . | 12 |
| 19 | 130 | 19 | 20 | 30 | 0.105 | 24.8 | 0.111 | 26.4 | . | . | 12 |
| 19 | 145 | 21 | 22 | 32 | 0.111 | 26.2 | 0.118 | 28.0 | . | . | 12 |
| 19 | 200 | 21 | 22 | 32 | 0.111 | 25.7 | 0.119 | 27.4 | . | . | 12 |
| 19 | 215 | 20 | 22 | 31 | 0.109 | 25.1 | 0.116 | 26.8 | . | . | 12 |
| 19 | 230 | 19 | 21 | 31 | 0.106 | 24.5 | 0.114 | 26.2 | . | . | 12 |
| 19 | 245 | 19 | 21 | 31 | 0.107 | 24.7 | 0.114 | 26.3 | . | . | 12 |
| 19 | 300 | 20 | 21 | 31 | 0.108 | 25.5 | 0.116 | 27.4 | . | . | 12 |
| 19 | 315 | 20 | 21 | 31 | 0.106 | 25.7 | 0.116 | 27.5 | . | . | 12 |
| 19 | 330 | 20 | 21 | 31 | 0.107 | 25.2 | 0.114 | 27.0 | . | . | 12 |
| 19 | 345 | 20 | 21 | 30 | 0.106 | 25.1 | 0.115 | 27.1 | . | . | 12 |
| 19 | 400 | 20 | 22 | 32 | 0.111 | 25.9 | 0.119 | 27.9 | . | . | 12 |
| 19 | 415 | 19 | 21 | 30 | 0.104 | 24.4 | 0.113 | 26.4 | . | . | 12 |
| 19 | 430 | 19 | 21 | 30 | 0.104 | 24.4 | 0.114 | 26.6 | . | . | 12 |
| 19 | 445 | 19 | 21 | 30 | 0.104 | 24.5 | 0.113 | 26.5 | . | . | 12 |
| 19 | 500 | 19 | 21 | 30 | 0.105 | 29.6 | 0.113 | 32.0 | . | . | 12 |
| 19 | 515 | 19 | 21 | 30 | 0.103 | 29.1 | 0.112 | 31.7 | . | . | 12 |
| 19 | 530 | 19 | 20 | 29 | 0.102 | 28.7 | 0.110 | 31.1 | . | . | 12 |
| 19 | 545 | 19 | 20 | 30 | 0.103 | 29.0 | 0.111 | 31.3 | . | . | 12 |
| 19 | 600 | 19 | 21 | 30 | 0.104 | 29.2 | 0.112 | 31.7 | . | . | 12 |
| 19 | 615 | 37 | 40 | 44 | 0.153 | 43.0 | 0.160 | 45.0 | . | . | . |
| 19 | 630 | 39 | 43 | 41 | 0.142 | 67.3 | 0.150 | 71.0 | . | . | . |
| 19 | 645 | 37 | 40 | 37 | 0.130 | 61.5 | 0.140 | 66.4 | . | . | . |
| 19 | 700 | 35 | 39 | 36 | 0.124 | 59.9 | 0.136 | 65.5 | . | . | . |
| 19 | 715 | 35 | 39 | 36 | 0.124 | 59.6 | 0.136 | 64.9 | . | . | 2 |
| 19 | 730 | 35 | 39 | 36 | 0.125 | 60.4 | 0.136 | 65.7 | . | . | 2 |
| 19 | 745 | 35 | 39 | 36 | 0.124 | 60.0 | 0.136 | 65.6 | . | . | 2 |
| 19 | 800 | 35 | 39 | 36 | 0.125 | 58.8 | 0.136 | 64.1 | . | . | 2 |

GCA/TECHNOLOGY DIVISION

CROWN ZELLERBACH
DUCT BURNER INLET NOX DATA SUMMARY

| DAY | TIME | NOX PPM WET | NOX PPM DRY | NOX ISO | NOX EMISSIONS FD METHOD LB/MBTU | NOX EMISSIONS FD METHOD LB/HR | NOX EMISSIONS FC METHOD LB/MBTU | NOX EMISSIONS FC METHOD LB/HR | NOX EMISSIONS QS METHOD TRANS LB/HR | NOX EMISSIONS QS METHOD TRAV LB/HR | TEST COND |
|---|---|---|---|---|---|---|---|---|---|---|---|
| 19 | 815 | 35 | 39 | 35 | 0.123 | 59.2 | 0.137 | 64.7 | . | . | . |
| 19 | 1015 | 56 | 60 | 57 | 0.207 | 93.6 | 0.219 | 99.0 | 89.8 | 103 | 5 |
| 19 | 1030 | 59 | 64 | 60 | 0.220 | 99.6 | 0.230 | 104 | 92.2 | 109 | 5 |
| 19 | 1045 | 58 | 63 | 59 | 0.216 | 98.0 | 0.222 | 101 | 90.5 | 107 | 5 |
| 19 | 1100 | 58 | 63 | 60 | 0.219 | 98.8 | 0.227 | 103 | 89.9 | 108 | 5 |
| 19 | 1115 | 59 | 63 | 61 | 0.220 | 99.5 | 0.227 | 103 | 89.7 | 108 | 5 |
| 19 | 1130 | 58 | 63 | 60 | 0.218 | 98.6 | 0.224 | 102 | 90.3 | 108 | 5 |
| 19 | 1145 | 59 | 64 | 61 | 0.222 | 100 | 0.229 | 104 | 92.3 | 110 | 5 |
| 19 | 1200 | 59 | 64 | 62 | 0.223 | 100 | 0.230 | 104 | 90.0 | 110 | 5 |
| 19 | 1215 | 60 | 65 | 63 | 0.227 | 102 | 0.234 | 105 | 91.0 | 112 | 5 |
| 19 | 1230 | 60 | 65 | 63 | 0.226 | 102 | 0.234 | 105 | 90.5 | 112 | 5 |
| 19 | 1245 | 61 | 65 | 63 | 0.228 | 103 | 0.238 | 107 | 91.7 | 112 | 5 |
| 19 | 1300 | 63 | 68 | 64 | 0.235 | 106 | 0.246 | 111 | 93.8 | 116 | 5 |
| 19 | 1315 | 68 | 74 | 69 | 0.254 | 114 | 0.269 | 121 | 103 | 126 | 5 |
| 19 | 1330 | 63 | 68 | 64 | 0.235 | 105 | 0.248 | 111 | 99.7 | 117 | 5 |
| 19 | 1345 | 62 | 67 | 63 | 0.232 | 104 | 0.245 | 110 | 99.7 | 115 | 5 |
| 19 | 1400 | 62 | 67 | 63 | 0.232 | 104 | 0.244 | 109 | 101 | 115 | 5 |
| 19 | 1415 | 62 | 68 | 63 | 0.233 | 104 | 0.245 | 110 | 101 | 116 | 5 |
| 19 | 1430 | 64 | 70 | 65 | 0.241 | 108 | 0.253 | 113 | 103 | 119 | 5 |
| 19 | 1445 | 61 | 67 | 62 | 0.230 | 103 | 0.242 | 108 | 99.3 | 114 | 5 |
| 19 | 1500 | 61 | 66 | 63 | 0.223 | 103 | 0.244 | 109 | 98.5 | 114 | 5 |
| 19 | 1515 | 62 | 67 | 63 | 0.232 | 104 | 0.245 | 110 | 99.1 | 115 | 5 |
| 19 | 1530 | 62 | 67 | 64 | 0.232 | 104 | 0.242 | 109 | 98.0 | 115 | 5 |
| 19 | 1545 | 62 | 67 | 63 | 0.231 | 103 | 0.241 | 108 | 96.7 | 115 | 5 |
| 19 | 1600 | 62 | 67 | 64 | 0.232 | 105 | 0.244 | 110 | 99.6 | 115 | 5 |
| 19 | 1615 | 62 | 67 | 64 | 0.232 | 105 | 0.247 | 112 | 100 | 115 | 5 |
| 19 | 1630 | 62 | 67 | 64 | 0.232 | 105 | 0.249 | 112 | 100 | 115 | 5 |
| 19 | 1815 | 37 | 40 | 39 | 0.138 | 63.5 | 0.146 | 67.1 | 60.0 | . | . |
| 19 | 1830 | 37 | 40 | 39 | 0.137 | 63.2 | 0.143 | 65.9 | 59.5 | . | . |
| 19 | 1845 | 37 | 41 | 39 | 0.139 | 63.8 | 0.143 | 65.6 | 59.2 | . | . |
| 19 | 1900 | 37 | 41 | 40 | 0.139 | 64.6 | 0.143 | 66.4 | 59.7 | . | . |
| 19 | 1915 | 37 | 41 | 40 | 0.138 | 64.0 | 0.141 | 65.5 | 59.0 | . | . |
| 19 | 1930 | 37 | 41 | 40 | 0.136 | 64.3 | 0.142 | 66.0 | 60.9 | . | . |
| 19 | 1945 | 37 | 41 | 40 | 0.139 | 64.8 | 0.143 | 66.4 | 61.3 | . | . |
| 19 | 2000 | 37 | 41 | 40 | 0.140 | 72.8 | 0.142 | 74.2 | 60.0 | . | . |
| 19 | 2015 | 36 | 40 | 39 | 0.135 | 70.3 | 0.138 | 72.1 | 57.9 | . | 2 |
| 19 | 2030 | 35 | 39 | 38 | 0.132 | 68.8 | 0.135 | 70.2 | 56.4 | . | 2 |
| 19 | 2045 | 35 | 39 | 38 | 0.132 | 68.8 | 0.135 | 70.5 | 56.4 | . | 2 |
| 19 | 2100 | 35 | 39 | 38 | 0.131 | 57.9 | 0.134 | 59.3 | 56.2 | . | 2 |
| 19 | 2115 | 35 | 39 | 38 | 0.132 | 58.4 | 0.135 | 59.7 | 56.2 | . | 2 |
| 19 | 2130 | 36 | 39 | 38 | 0.134 | 59.0 | 0.136 | 59.8 | 56.5 | . | 2 |
| 19 | 2145 | 36 | 40 | 38 | 0.134 | 59.2 | 0.137 | 60.3 | 57.4 | . | 2 |
| 19 | 2200 | 36 | 40 | 39 | 0.135 | 48.6 | 0.136 | 49.2 | 57.5 | . | 2 |
| 19 | 2215 | 36 | 40 | 39 | 0.135 | 48.7 | 0.137 | 49.4 | 57.8 | . | . |
| 19 | 2230 | 36 | 40 | 39 | 0.136 | 49.0 | 0.137 | 49.5 | 57.9 | . | . |
| 19 | 2245 | 36 | 40 | 41 | 0.141 | 50.8 | 0.144 | 51.9 | 54.8 | . | . |
| 19 | 2300 | 18 | 19 | 30 | 0.102 | 21.5 | 0.105 | 22.2 | 26.3 | . | . |
| 19 | 2315 | 16 | 18 | 28 | 0.098 | 20.6 | 0.100 | 21.1 | 21.4 | . | 12 |

. REPRESENTS MISSING DATA

GCA/TECHNOLOGY DIVISION

CROWN ZELLERBACH
DUCT BURNER INLET NOX DATA SUMMARY

| DAY | TIME | NOX PPM WET | NOX PPM DRY | NOX ISO | NOX EMISSIONS FD METHOD LB/MBTU | NOX EMISSIONS FD METHOD LB/HR | NOX EMISSIONS FC METHOD LB/MBTU | NOX EMISSIONS FC METHOD LB/HR | NOX EMISSIONS GS METHOD TRANS LB/HR | NOX EMISSIONS GS METHOD TRAV LB/HR | TEST COND |
|---|---|---|---|---|---|---|---|---|---|---|---|
| 19 | 2330 | 16 | 17 | 28 | 0.097 | 20.5 | 0.099 | 20.9 | 20.5 | . | 12 |
| 19 | 2345 | 16 | 17 | 28 | 0.097 | 20.5 | 0.100 | 21.1 | 21.1 | . | 12 |
| 20 | 0 | 17 | 18 | 29 | 0.099 | 20.9 | 0.101 | 21.3 | 20.6 | . | 12 |
| 20 | 15 | 16 | 18 | 28 | 0.098 | 22.0 | 0.100 | 22.5 | 20.7 | . | 12 |
| 20 | 30 | 17 | 18 | 29 | 0.098 | 22.1 | 0.099 | 22.4 | 20.7 | . | 12 |
| 20 | 45 | 17 | 18 | 28 | 0.097 | 22.0 | 0.100 | 22.6 | 20.6 | . | 12 |
| 20 | 100 | 16 | 17 | 28 | 0.097 | 21.4 | 0.098 | 21.8 | 20.4 | . | 12 |
| 20 | 115 | 16 | 17 | 28 | 0.095 | 21.1 | 0.098 | 21.7 | 20.1 | . | 12 |
| 20 | 130 | 16 | 17 | 28 | 0.095 | 21.1 | 0.098 | 21.6 | 19.8 | . | 12 |
| 20 | 145 | 16 | 17 | 28 | 0.095 | 21.1 | 0.098 | 21.6 | 20.1 | . | 12 |
| 20 | 200 | 16 | 17 | 27 | 0.094 | 20.9 | 0.096 | 21.3 | 20.0 | . | 12 |
| 20 | 215 | 16 | 17 | 27 | 0.093 | 20.0 | 0.096 | 20.6 | 20.1 | . | 13 |
| 20 | 230 | 15 | 16 | 26 | 0.090 | 19.4 | 0.093 | 19.5 | 19.2 | . | 13 |
| 20 | 245 | 15 | 16 | 26 | 0.089 | 19.1 | 0.091 | 19.4 | 18.7 | . | 13 |
| 20 | 300 | 26 | 28 | 47 | 0.159 | 37.8 | 0.163 | 38.6 | 33.3 | . | 13 |
| 20 | 315 | 32 | 34 | 56 | 0.193 | 45.7 | 0.195 | 46.3 | 40.7 | . | 12 |
| 20 | 330 | 30 | 32 | 53 | 0.181 | 43.0 | 0.183 | 43.5 | 38.7 | . | 12 |
| 20 | 345 | 35 | 37 | 59 | 0.203 | 48.1 | 0.203 | 48.2 | 44.2 | . | 12 |
| 20 | 400 | 35 | 37 | 59 | 0.202 | 42.0 | 0.205 | 42.6 | 44.9 | . | 12 |
| 20 | 415 | 19 | 20 | 33 | 0.114 | 23.7 | 0.116 | 24.2 | 24.9 | . | 12 |
| 20 | 430 | 15 | 16 | 27 | 0.093 | 19.3 | 0.094 | 19.5 | 20.0 | . | 12 |
| 20 | 445 | 16 | 17 | 27 | 0.093 | 19.4 | 0.095 | 19.8 | 20.0 | . | 12 |
| 20 | 500 | 16 | 17 | 28 | 0.094 | 21.0 | 0.096 | 21.2 | 20.3 | . | 12 |
| 20 | 515 | 16 | 17 | 27 | 0.092 | 20.5 | 0.094 | 20.8 | 19.8 | . | 12 |
| 20 | 530 | 15 | 16 | 27 | 0.091 | 20.2 | 0.092 | 20.5 | 19.4 | . | 12 |
| 20 | 545 | 15 | 16 | 27 | 0.091 | 20.2 | 0.092 | 20.4 | 19.6 | . | 12 |
| 20 | 600 | 16 | 17 | 27 | 0.092 | 41.2 | 0.094 | 41.9 | 20.2 | . | 12 |
| 20 | 615 | 32 | 35 | 42 | 0.143 | 64.0 | 0.142 | 63.3 | 47.9 | . | . |
| 20 | 630 | 39 | 42 | 42 | 0.143 | 64.0 | 0.143 | 63.9 | 61.7 | . | . |
| 20 | 645 | 37 | 41 | 40 | 0.139 | 62.0 | 0.139 | 62.3 | 59.5 | . | . |
| 20 | 700 | 35 | 39 | 39 | 0.134 | 63.8 | 0.134 | 63.8 | 57.2 | . | . |
| 20 | 715 | 35 | 39 | 38 | 0.132 | 62.8 | 0.132 | 62.5 | 56.7 | . | 2 |
| 20 | 730 | 35 | 39 | 38 | 0.130 | 62.2 | 0.131 | 62.6 | 56.8 | . | 2 |
| 20 | 745 | 35 | 38 | 37 | 0.129 | 61.5 | 0.130 | 61.6 | 55.9 | . | 2 |
| 20 | 800 | 34 | 38 | 37 | 0.127 | 60.8 | 0.127 | 60.7 | 55.6 | . | 2 |
| 20 | 815 | 34 | 38 | 37 | 0.125 | 59.8 | 0.127 | 60.7 | 55.8 | . | 2 |
| 20 | 1000 | 100 | 107 | 108 | 0.371 | 172 | 0.391 | 181 | 159 | . | . |
| 20 | 1015 | 102 | 109 | 109 | 0.377 | 174 | 0.395 | 183 | 161 | 188 | 7 |
| 20 | 1030 | 102 | 110 | 109 | 0.380 | 176 | 0.397 | 184 | 162 | 189 | 7 |
| 20 | 1045 | 101 | 109 | 108 | 0.376 | 174 | 0.394 | 182 | 159 | 187 | 7 |
| 20 | 1100 | 102 | 110 | 109 | 0.379 | 176 | 0.395 | 183 | 161 | 189 | 7 |
| 20 | 1115 | 103 | 110 | 109 | 0.383 | 174 | 0.400 | 182 | 161 | 191 | 7 |
| 20 | 1130 | 103 | 111 | 109 | 0.385 | 175 | 0.401 | 183 | 161 | 191 | 7 |
| 20 | 1145 | 104 | 111 | 109 | 0.385 | 175 | 0.404 | 184 | 163 | 192 | 7 |
| 20 | 1200 | 104 | 111 | 111 | 0.386 | 176 | 0.405 | 184 | 162 | 192 | 7 |
| 20 | 1215 | 103 | 110 | 110 | 0.383 | 174 | 0.404 | 184 | 162 | 190 | 7 |
| 20 | 1230 | 103 | 111 | 110 | 0.384 | 175 | 0.406 | 185 | 164 | 191 | 7 |
| 20 | 1245 | 104 | 111 | 111 | 0.385 | 175 | 0.410 | 187 | 163 | 192 | 7 |

. REPRESENTS MISSING DATA

GCA/TECHNOLOGY DIVISION

CROWN ZELLERBACH
DUCT BURNER INLET NOX DATA SUMMARY

| DAY | TIME | NOX PPM WET | NOX PPM DRY | NOX ISO | NOX EMISSIONS FD METHOD LB/MBTU | NOX EMISSIONS FD METHOD LB/HR | NOX EMISSIONS FC METHOD LB/MBTU | NOX EMISSIONS FC METHOD LB/HR | NOX EMISSIONS QS METHOD TRANS LB/HR | NOX EMISSIONS QS METHOD TRAV LB/HR | TEST COND |
|---|---|---|---|---|---|---|---|---|---|---|---|
| 20 | 1300 | 104 | 112 | 112 | 0.386 | 174 | 0.403 | 182 | 162 | 192 | 7 |
| 20 | 1315 | 104 | 111 | 111 | 0.386 | 174 | 0.401 | 181 | 161 | 192 | 7 |
| 20 | 1330 | 104 | 112 | 112 | 0.387 | 174 | 0.406 | 183 | 162 | 194 | 7 |
| 20 | 1345 | 105 | 113 | 112 | 0.389 | 175 | 0.412 | 185 | 162 | 194 | 7 |
| 20 | 1400 | 105 | 113 | 112 | 0.392 | 176 | 0.420 | 188 | 163 | 195 | 7 |
| 20 | 1415 | 105 | 113 | 111 | 0.389 | 175 | 0.415 | 186 | 162 | 194 | 7 |
| 20 | 1430 | 105 | 113 | 111 | 0.389 | 174 | 0.416 | 187 | 164 | 195 | 7 |
| 20 | 1445 | 105 | 113 | 111 | 0.389 | 174 | 0.413 | 185 | 164 | 194 | 7 |
| 20 | 1500 | 105 | 113 | 111 | 0.389 | 173 | 0.413 | 184 | 160 | 195 | 7 |
| 20 | 1515 | 105 | 113 | 111 | 0.387 | 172 | 0.413 | 184 | 163 | 194 | 7 |
| 20 | 1530 | 105 | 113 | 111 | 0.389 | 173 | 0.416 | 186 | 164 | 195 | 7 |
| 20 | 1545 | 106 | 114 | 112 | 0.391 | 174 | 0.416 | 185 | 177 | 196 | 7 |
| 20 | 1600 | 105 | 113 | 108 | 0.388 | 173 | 0.418 | 186 | 172 | 195 | 7 |
| 20 | 1615 | 93 | 99 | 96 | 0.347 | 160 | 0.376 | 173 | 153 | 172 | 7 |
| 20 | 1630 | 104 | 112 | 107 | 0.384 | 177 | 0.404 | 186 | 173 | 193 | 7 |
| 20 | 1645 | 104 | 112 | 107 | 0.384 | 176 | 0.402 | 185 | 174 | 194 | 7 |
| 20 | 1700 | 105 | 112 | 113 | 0.387 | 175 | 0.399 | 180 | 175 | 194 | 7 |
| 20 | 1715 | 58 | 63 | 61 | 0.210 | 94.9 | 0.218 | 98.3 | 96.5 | . | . |
| 20 | 1730 | 39 | 42 | 41 | 0.141 | 63.7 | 0.145 | 65.5 | 66.2 | . | . |
| 20 | 1745 | 38 | 41 | 39 | 0.135 | 61.0 | 0.139 | 62.8 | 63.7 | . | . |
| 20 | 1800 | 37 | 41 | 39 | 0.136 | 62.4 | 0.140 | 64.2 | 62.1 | . | . |
| 20 | 1815 | 36 | 40 | 39 | 0.134 | 61.7 | 0.139 | 63.8 | 61.2 | . | . |
| 20 | 1830 | 36 | 40 | 39 | 0.134 | 61.5 | 0.138 | 63.6 | 60.8 | . | . |
| 20 | 1845 | 36 | 40 | 38 | 0.132 | 60.6 | 0.136 | 62.5 | 60.2 | . | . |
| 20 | 1900 | 36 | 39 | 38 | 0.131 | 60.2 | 0.135 | 62.1 | 59.4 | . | . |
| 20 | 1915 | 36 | 40 | 38 | 0.132 | 60.9 | 0.136 | 63.0 | 59.5 | . | . |
| 20 | 1930 | 36 | 40 | 39 | 0.132 | 61.0 | 0.136 | 62.9 | 59.5 | . | . |
| 20 | 1945 | 36 | 40 | 38 | 0.131 | 60.8 | 0.135 | 62.6 | 59.3 | . | . |
| 20 | 2000 | 36 | 39 | 38 | 0.131 | 60.7 | 0.135 | 62.6 | 58.2 | . | . |
| 20 | 2015 | 35 | 39 | 38 | 0.130 | 60.4 | 0.134 | 62.2 | 57.9 | . | . |
| 20 | 2030 | 35 | 39 | 38 | 0.129 | 60.0 | 0.133 | 62.0 | 58.2 | . | . |
| 20 | 2045 | 35 | 39 | 38 | 0.130 | 60.3 | 0.134 | 62.0 | 58.4 | . | . |
| 20 | 2100 | 35 | 39 | 38 | 0.130 | 60.2 | 0.134 | 62.0 | 57.9 | . | . |
| 20 | 2115 | 35 | 39 | 37 | 0.128 | 59.3 | 0.132 | 61.0 | 56.1 | . | 3 |
| 20 | 2130 | 35 | 39 | 38 | 0.129 | 59.7 | 0.133 | 61.7 | 56.4 | . | 3 |
| 20 | 2145 | 36 | 40 | 38 | 0.131 | 60.9 | 0.135 | 62.5 | 57.5 | . | 3 |
| 20 | 2200 | 36 | 40 | 38 | 0.133 | 60.1 | 0.136 | 61.8 | 56.5 | . | 3 |
| 20 | 2215 | 36 | 40 | 39 | 0.133 | 60.3 | 0.136 | 61.5 | 59.2 | . | . |
| 20 | 2230 | 36 | 40 | 39 | 0.134 | 60.6 | 0.137 | 62.3 | 59.1 | . | . |
| 20 | 2245 | 36 | 40 | 39 | 0.134 | 60.8 | 0.137 | 62.2 | 58.2 | . | . |
| 20 | 2300 | 35 | 38 | 38 | 0.132 | 29.6 | 0.138 | 30.8 | 55.2 | . | . |
| 20 | 2315 | 19 | 20 | 29 | 0.101 | 22.5 | 0.107 | 24.0 | 24.6 | . | . |
| 20 | 2330 | 16 | 17 | 26 | 0.089 | 20.0 | 0.096 | 21.4 | 20.6 | . | . |
| 20 | 2345 | 19 | 20 | 31 | 0.109 | 24.4 | 0.117 | 26.1 | 23.5 | . | . |
| 21 | 0 | 22 | 24 | 37 | 0.126 | 27.3 | 0.134 | 29.0 | 27.2 | . | . |
| 21 | 15 | 17 | 18 | 27 | 0.093 | 20.1 | 0.099 | 21.3 | 20.4 | . | 13 |
| 21 | 30 | 17 | 18 | 27 | 0.092 | 19.9 | 0.099 | 21.3 | 20.9 | . | 13 |
| 21 | 45 | 16 | 17 | 27 | 0.092 | 19.8 | 0.098 | 21.1 | 21.4 | . | 13 |

. REPRESENTS MISSING DATA

GCA/TECHNOLOGY DIVISION

CROWN ZELLERBACH
DUCT BURNER INLET NOX DATA SUMMARY

| DAY | TIME | NOX PPM WET | NOX PPM DRY | NOX ISO | NOX EMISSIONS FD METHOD LB/MBTU | NOX EMISSIONS FD METHOD LB/HR | NOX EMISSIONS FC METHOD LB/MBTU | NOX EMISSIONS FC METHOD LB/HR | NOX EMISSIONS GS METHOD TRANS LB/HR | NOX EMISSIONS GS METHOD TRAV LB/HR | TEST COND |
|---|---|---|---|---|---|---|---|---|---|---|---|
| 21 | 100 | 16 | 18 | 26 | 0.091 | 20.9 | 0.098 | 22.3 | 21.4 | . | 13 |
| 21 | 115 | 16 | 18 | 26 | 0.091 | 20.9 | 0.097 | 22.2 | 22.4 | . | 13 |
| 21 | 130 | 16 | 18 | 26 | 0.091 | 20.8 | 0.097 | 22.2 | 22.5 | . | 13 |
| 21 | 145 | 16 | 17 | 26 | 0.091 | 20.8 | 0.096 | 22.0 | 21.6 | . | 13 |
| 21 | 200 | 16 | 17 | 26 | 0.090 | 20.0 | 0.097 | 21.3 | 21.7 | . | 13 |
| 21 | 215 | 16 | 17 | 27 | 0.092 | 20.2 | 0.097 | 21.4 | 21.9 | . | 13 |
| 21 | 230 | 16 | 18 | 27 | 0.091 | 20.1 | 0.098 | 21.6 | 22.1 | . | 13 |
| 21 | 245 | 16 | 17 | 26 | 0.091 | 20.0 | 0.096 | 21.2 | 21.7 | . | 13 |
| 21 | 300 | 16 | 17 | 26 | 0.090 | 20.0 | 0.096 | 21.3 | 21.4 | . | 13 |
| 21 | 315 | 16 | 17 | 26 | 0.089 | 19.7 | 0.096 | 21.3 | 21.1 | . | 13 |
| 21 | 330 | 16 | 17 | 24 | 0.084 | 18.7 | 0.096 | 21.2 | 20.9 | . | 13 |
| 21 | 345 | 16 | 17 | 24 | 0.083 | 18.4 | 0.096 | 21.2 | 20.7 | . | 13 |
| 21 | 400 | 16 | 17 | 25 | 0.084 | 18.8 | 0.096 | 21.1 | 20.8 | . | 13 |
| 21 | 415 | 16 | 17 | 25 | 0.085 | 19.0 | 0.096 | 21.3 | 20.9 | . | 13 |
| 21 | 430 | 16 | 17 | 25 | 0.087 | 19.3 | 0.096 | 21.4 | 21.1 | . | 13 |
| 21 | 445 | 16 | 17 | 25 | 0.085 | 19.0 | 0.095 | 21.2 | 21.2 | . | 13 |
| 21 | 500 | 16 | 17 | 24 | 0.084 | 18.7 | 0.094 | 20.9 | 20.9 | . | 13 |
| 21 | 515 | 16 | 17 | 25 | 0.085 | 18.9 | 0.094 | 20.9 | 21.1 | . | 13 |
| 21 | 530 | 16 | 17 | 25 | 0.086 | 19.2 | 0.096 | 21.3 | 21.4 | . | 13 |
| 21 | 545 | 16 | 17 | 25 | 0.086 | 19.2 | 0.095 | 21.1 | 21.3 | . | 13 |
| 21 | 600 | 16 | 17 | 25 | 0.085 | 36.4 | 0.095 | 40.6 | 20.8 | . | 13 |
| 21 | 615 | 32 | 35 | 39 | 0.136 | 58.3 | 0.145 | 62.3 | 48.4 | . | . |
| 21 | 630 | 40 | 44 | 41 | 0.140 | 60.3 | 0.150 | 64.2 | 65.3 | . | . |
| 21 | 645 | 38 | 42 | 38 | 0.133 | 57.0 | 0.140 | 60.3 | 61.4 | . | . |
| 21 | 700 | 37 | 41 | 37 | 0.131 | 60.6 | 0.139 | 64.3 | 60.4 | . | . |
| 21 | 715 | 37 | 41 | 37 | 0.132 | 61.1 | 0.139 | 64.4 | 60.0 | . | 3 |
| 21 | 730 | 36 | 40 | 36 | 0.130 | 60.0 | 0.137 | 63.4 | 58.9 | . | 3 |
| 21 | 745 | 36 | 40 | 36 | 0.128 | 59.5 | 0.136 | 62.9 | 58.5 | . | 3 |
| 21 | 800 | 36 | 40 | 37 | 0.129 | 60.0 | 0.135 | 62.8 | 58.9 | . | 3 |
| 21 | 815 | 36 | 40 | 36 | 0.128 | 59.5 | 0.134 | 62.4 | 58.3 | . | 3 |
| 21 | 830 | 36 | 40 | 37 | 0.130 | 60.2 | 0.134 | 62.3 | 58.3 | . | 3 |
| 21 | 845 | 35 | 39 | 36 | 0.128 | 59.4 | 0.133 | 61.9 | 57.7 | . | 3 |
| 21 | 900 | 35 | 39 | 37 | 0.129 | 59.3 | 0.126 | 58.8 | 57.3 | . | 3 |
| 21 | 1300 | 37 | 41 | 41 | 0.145 | 64.8 | 0.148 | 66.2 | 61.0 | . | 2 |
| 21 | 1315 | 37 | 41 | 39 | 0.139 | 62.2 | 0.140 | 63.0 | 60.1 | . | 2 |
| 21 | 1330 | 37 | 41 | 39 | 0.140 | 62.6 | 0.141 | 63.1 | 59.9 | . | 2 |
| 21 | 1345 | 37 | 41 | 39 | 0.140 | 62.9 | 0.140 | 62.8 | 60.0 | . | 2 |
| 21 | 1400 | 38 | 41 | 39 | 0.141 | 63.9 | 0.140 | 63.5 | 60.5 | . | 2 |
| 21 | 1415 | 37 | 41 | 39 | 0.139 | 63.0 | 0.139 | 62.9 | 61.3 | . | 2 |
| 21 | 1430 | 38 | 41 | 39 | 0.140 | 63.6 | 0.140 | 63.2 | 59.9 | . | 2 |
| 21 | 1445 | 37 | 41 | 39 | 0.140 | 63.5 | 0.139 | 63.0 | 59.4 | . | 2 |
| 21 | 1500 | 38 | 41 | 39 | 0.141 | 62.9 | 0.140 | 62.4 | 59.3 | . | 2 |
| 21 | 1515 | 38 | 42 | 39 | 0.141 | 63.2 | 0.141 | 62.9 | 60.6 | . | 2 |
| 21 | 1530 | 38 | 41 | 39 | 0.141 | 62.9 | 0.140 | 62.4 | 60.1 | . | 2 |
| 21 | 1545 | 37 | 41 | 39 | 0.139 | 61.9 | 0.137 | 61.4 | 59.1 | . | 2 |
| 21 | 1600 | 37 | 41 | 40 | 0.140 | 62.0 | 0.139 | 61.7 | 60.2 | . | 2 |
| 21 | 1615 | 37 | 41 | 40 | 0.140 | 61.8 | 0.139 | 61.5 | 59.5 | . | 2 |
| 21 | 1630 | 37 | 41 | 39 | 0.139 | 61.5 | 0.139 | 61.3 | 58.3 | . | 2 |

. REPRESENTS MISSING DATA

SCA/TECHNOLOGY DIVISION

CROWN ZELLERBACH

DUCT BURNER INLET NOX DATA SUMMARY

| DAY | TIME | NOX PPM WET | NOX PPM DRY | NOX ISO | NOX EMISSIONS FD METHOD LB/MBTU | NOX EMISSIONS FD METHOD LB/HR | NOX EMISSIONS FC METHOD LB/MBTU | NOX EMISSIONS FC METHOD LB/HR | NOX EMISSIONS QS METHOD TRANS LB/HR | NOX EMISSIONS QS METHOD TRAV LB/HR | TEST COND |
|---|---|---|---|---|---|---|---|---|---|---|---|
| 21 | 1645 | 37 | 41 | 39 | 0.138 | 61.2 | 0.138 | 61.0 | 57.9 | . | 2 |
| 21 | 1700 | 37 | 41 | 40 | 0.138 | 62.9 | 0.138 | 62.4 | 57.7 | . | 2 |
| 21 | 1715 | 37 | 40 | 39 | 0.136 | 61.7 | 0.136 | 61.7 | 57.5 | . | 2 |
| 21 | 1730 | 36 | 40 | 39 | 0.136 | 61.6 | 0.135 | 61.5 | 57.4 | . | 2 |
| 21 | 1745 | 36 | 40 | 39 | 0.135 | 61.2 | 0.135 | 61.2 | 56.6 | . | 2 |
| 21 | 1800 | 36 | 40 | 40 | 0.134 | 60.5 | 0.134 | 60.6 | 57.0 | . | 2 |
| 21 | 1815 | 36 | 39 | 39 | 0.133 | 59.8 | 0.133 | 59.9 | 56.9 | . | 2 |
| 21 | 1830 | 35 | 39 | 39 | 0.131 | 59.1 | 0.132 | 59.4 | 56.7 | . | 2 |
| 21 | 1845 | 35 | 39 | 39 | 0.131 | 59.2 | 0.131 | 59.2 | 56.4 | . | 2 |
| 21 | 1900 | 35 | 39 | 37 | 0.131 | 59.3 | 0.132 | 60.2 | 56.8 | . | 2 |
| 21 | 1915 | 36 | 39 | 38 | 0.132 | 60.4 | 0.133 | 60.6 | 57.3 | . | 2 |
| 21 | 1930 | 36 | 40 | 38 | 0.133 | 60.9 | 0.133 | 60.9 | 57.3 | . | 2 |
| 21 | 1945 | 36 | 40 | 38 | 0.133 | 60.7 | 0.133 | 60.8 | 57.3 | . | 2 |
| 21 | 2000 | 36 | 39 | 38 | 0.133 | 59.3 | 0.132 | 59.2 | 57.1 | . | 2 |
| 21 | 2015 | 36 | 40 | 38 | 0.133 | 59.6 | 0.133 | 59.6 | 57.7 | . | 2 |
| 21 | 2030 | 36 | 39 | 38 | 0.133 | 59.4 | 0.132 | 59.0 | 56.9 | . | 2 |
| 21 | 2115 | 35 | 39 | 38 | 0.132 | 60.0 | 0.134 | 61.1 | 56.6 | . | 2 |
| 21 | 2130 | 35 | 39 | 38 | 0.132 | 60.3 | 0.133 | 60.5 | 56.9 | . | 2 |
| 21 | 2145 | 35 | 39 | 38 | 0.132 | 60.1 | 0.131 | 59.7 | 56.8 | . | 2 |
| 21 | 2200 | 35 | 39 | 38 | 0.131 | 60.0 | 0.130 | 59.7 | 57.0 | . | 2 |
| 21 | 2215 | 35 | 39 | 38 | 0.131 | 60.2 | 0.130 | 59.6 | 57.0 | . | 2 |
| 21 | 2230 | 35 | 39 | 38 | 0.131 | 60.2 | 0.130 | 59.7 | 56.9 | . | 2 |
| 21 | 2245 | 35 | 39 | 38 | 0.130 | 59.7 | 0.129 | 59.0 | 56.7 | . | 2 |
| 21 | 2300 | 35 | 39 | 38 | 0.131 | 30.5 | 0.130 | 30.3 | 57.2 | . | 2 |
| 21 | 2315 | 26 | 28 | 40 | 0.136 | 31.8 | 0.139 | 32.4 | 34.5 | . | . |
| 21 | 2330 | 28 | 30 | 47 | 0.162 | 37.7 | 0.163 | 38.0 | 36.0 | . | . |
| 21 | 2345 | 16 | 17 | 27 | 0.093 | 21.6 | 0.094 | 21.8 | 20.8 | . | . |
| 22 | 0 | 15 | 16 | 26 | 0.089 | 19.5 | 0.091 | 19.8 | 20.1 | . | . |
| 22 | 15 | 16 | 17 | 26 | 0.091 | 19.8 | 0.092 | 20.2 | 20.7 | . | 12 |
| 22 | 30 | 16 | 17 | 26 | 0.090 | 19.7 | 0.091 | 19.9 | 20.0 | . | 12 |
| 22 | 45 | 16 | 17 | 26 | 0.090 | 19.7 | 0.092 | 20.0 | 20.2 | . | 12 |
| 22 | 100 | 15 | 16 | 26 | 0.089 | 19.4 | 0.090 | 19.6 | 19.6 | . | 12 |
| 22 | 115 | 15 | 16 | 26 | 0.089 | 19.4 | 0.091 | 19.8 | 20.0 | . | 12 |
| 22 | 130 | 19 | 20 | 32 | 0.109 | 23.9 | 0.110 | 24.1 | 24.8 | . | 12 |
| 22 | 145 | 16 | 17 | 26 | 0.089 | 19.4 | 0.091 | 19.8 | 20.4 | . | 12 |
| 22 | 200 | 15 | 16 | 26 | 0.088 | 20.0 | 0.089 | 20.2 | 19.9 | . | 12 |
| 22 | 215 | 15 | 16 | 25 | 0.087 | 19.7 | 0.088 | 20.0 | 20.1 | . | 12 |
| 22 | 230 | 15 | 16 | 25 | 0.087 | 19.7 | 0.088 | 20.0 | 19.7 | . | 12 |
| 22 | 245 | 15 | 16 | 25 | 0.087 | 19.6 | 0.088 | 19.9 | 19.7 | . | 12 |
| 22 | 300 | 15 | 16 | 25 | 0.087 | 18.6 | 0.088 | 19.0 | 20.1 | . | 12 |
| 22 | 315 | 15 | 16 | 25 | 0.087 | 18.8 | 0.088 | 18.9 | 19.9 | . | 13 |
| 22 | 330 | 15 | 16 | 25 | 0.086 | 18.5 | 0.088 | 18.8 | 19.5 | . | 13 |
| 22 | 345 | 15 | 16 | 25 | 0.086 | 18.5 | 0.087 | 18.6 | 19.5 | . | 13 |
| 22 | 400 | 15 | 16 | 25 | 0.085 | 18.5 | 0.086 | 18.8 | 19.4 | . | 13 |
| 22 | 415 | 15 | 16 | 25 | 0.085 | 18.5 | 0.086 | 18.7 | 19.2 | . | . |
| 22 | 430 | 15 | 16 | 25 | 0.085 | 18.4 | 0.085 | 18.6 | 19.1 | . | . |
| 22 | 445 | 15 | 16 | 25 | 0.084 | 18.3 | 0.085 | 18.5 | 19.2 | . | . |
| 22 | 500 | 16 | 17 | 27 | 0.090 | 21.4 | 0.090 | 21.5 | 21.1 | . | . |

. REPRESENTS MISSING DATA

GCA/TECHNOLOGY DIVISION

CROWN ZELLERBACH
DUCT BURNER INLET NOX DATA SUMMARY

| DAY | TIME | NOX PPM WET | NOX PPM DRY | NOX ISO | NOX EMISSIONS FD METHOD LB/MBTU | NOX EMISSIONS FD METHOD LB/HR | NOX EMISSIONS FC METHOD LB/MBTU | NOX EMISSIONS FC METHOD LB/HR | NOX EMISSIONS GS METHOD TRANS LB/HR | NOX EMISSIONS GS METHOD TRAV LB/HR | TEST COND |
|---|---|---|---|---|---|---|---|---|---|---|---|
| 22 | 515 | 18 | 19 | 28 | 0.096 | 22.8 | 0.097 | 23.1 | 23.0 | . | 14 |
| 22 | 530 | 17 | 19 | 28 | 0.096 | 22.7 | 0.096 | 22.7 | 22.6 | . | 14 |
| 22 | 545 | 18 | 19 | 28 | 0.096 | 22.7 | 0.096 | 22.9 | 22.6 | . | 14 |
| 22 | 600 | 18 | 19 | 28 | 0.096 | 22.2 | 0.096 | 22.3 | 23.0 | . | 14 |
| 22 | 615 | 17 | 18 | 27 | 0.094 | 21.8 | 0.094 | 21.9 | 22.7 | . | 14 |
| 22 | 630 | 17 | 18 | 27 | 0.094 | 21.8 | 0.095 | 21.9 | 22.5 | . | 14 |
| 22 | 645 | 17 | 18 | 27 | 0.093 | 21.6 | 0.093 | 21.5 | 22.4 | . | 14 |
| 22 | 700 | 17 | 18 | 27 | 0.093 | 21.5 | 0.093 | 21.5 | 22.3 | . | 14 |
| 22 | 715 | 15 | 16 | 25 | 0.085 | 19.8 | 0.085 | 19.8 | 19.5 | . | . |
| 22 | 730 | 15 | 16 | 25 | 0.085 | 19.6 | 0.084 | 19.6 | 19.4 | . | . |
| 22 | 745 | 15 | 16 | 25 | 0.084 | 19.4 | 0.084 | 19.5 | 19.2 | . | . |
| 22 | 800 | 15 | 16 | 26 | 0.086 | 19.5 | 0.085 | 19.3 | 19.4 | . | . |
| 22 | 815 | 15 | 16 | 26 | 0.085 | 19.4 | 0.085 | 19.4 | 19.2 | . | . |
| 22 | 945 | 15 | 16 | 23 | 0.076 | 17.5 | 0.092 | 21.2 | 19.4 | . | 13 |
| 22 | 1000 | 15 | 16 | 23 | 0.076 | 16.8 | 0.091 | 19.9 | 19.5 | . | 13 |
| 22 | 1015 | 15 | 16 | 23 | 0.076 | 16.8 | 0.092 | 20.2 | 19.6 | . | 13 |
| 22 | 1030 | 16 | 17 | 23 | 0.078 | 17.2 | 0.092 | 20.3 | 20.1 | . | 13 |
| 22 | 1045 | 15 | 16 | 23 | 0.076 | 16.8 | 0.090 | 19.9 | 19.8 | . | 13 |
| 22 | 1100 | 15 | 16 | 22 | 0.076 | 17.0 | 0.090 | 20.1 | 19.5 | . | 13 |
| 22 | 1115 | 15 | 16 | 22 | 0.076 | 17.0 | 0.089 | 20.1 | 19.7 | . | 12 |
| 22 | 1130 | 15 | 16 | 22 | 0.075 | 16.7 | 0.089 | 20.0 | 19.2 | . | 12 |
| 22 | 1145 | 15 | 17 | 23 | 0.077 | 17.2 | 0.091 | 20.4 | 19.9 | . | 12 |
| 22 | 1200 | 15 | 17 | 22 | 0.076 | 17.3 | 0.091 | 20.6 | 20.1 | . | 12 |
| 22 | 1215 | 15 | 16 | 22 | 0.076 | 17.2 | 0.091 | 20.5 | 19.8 | . | 12 |
| 22 | 1230 | 16 | 17 | 22 | 0.077 | 17.3 | 0.092 | 20.8 | 20.2 | . | 12 |
| 22 | 1245 | 15 | 16 | 22 | 0.076 | 17.1 | 0.091 | 20.5 | 19.7 | . | 12 |
| 22 | 1300 | 16 | 17 | 22 | 0.078 | 17.3 | 0.094 | 20.7 | 20.7 | . | 12 |
| 22 | 1315 | 16 | 17 | 23 | 0.079 | 17.5 | 0.094 | 20.9 | 21.0 | . | 13 |
| 22 | 1330 | 16 | 18 | 23 | 0.080 | 17.8 | 0.096 | 21.3 | 21.6 | . | 13 |
| 22 | 1345 | 16 | 17 | 22 | 0.079 | 17.4 | 0.095 | 21.0 | 20.7 | . | 13 |
| 22 | 1400 | 17 | 18 | 23 | 0.082 | 18.5 | 0.098 | 22.1 | 21.8 | . | 13 |
| 22 | 1415 | 17 | 18 | 23 | 0.081 | 18.4 | 0.098 | 22.0 | 21.6 | . | 13 |
| 22 | 1430 | 17 | 18 | 23 | 0.082 | 18.5 | 0.098 | 22.0 | 21.4 | . | 13 |
| 22 | 1445 | 17 | 18 | 23 | 0.082 | 18.5 | 0.098 | 22.1 | 21.8 | . | 13 |
| 22 | 1500 | 16 | 18 | 23 | 0.081 | 18.2 | 0.097 | 21.7 | 21.2 | . | 13 |
| 22 | 1515 | 17 | 18 | 24 | 0.083 | 18.8 | 0.099 | 22.3 | 22.2 | . | 13 |
| 22 | 1530 | 17 | 18 | 24 | 0.084 | 18.8 | 0.100 | 22.5 | 22.8 | . | 13 |
| 22 | 1545 | 17 | 18 | 24 | 0.084 | 18.9 | 0.100 | 22.4 | 22.7 | . | 13 |
| 22 | 1600 | 17 | 18 | 23 | 0.082 | 18.4 | 0.098 | 22.1 | 22.0 | . | 13 |
| 22 | 1615 | 17 | 18 | 24 | 0.083 | 18.2 | 0.099 | 21.7 | 22.6 | . | 13 |
| 22 | 1630 | 17 | 18 | 24 | 0.083 | 18.3 | 0.099 | 21.7 | 22.6 | . | 13 |
| 22 | 1645 | 17 | 18 | 24 | 0.084 | 18.4 | 0.099 | 21.8 | 22.7 | . | 13 |
| 22 | 1700 | 16 | 17 | 23 | 0.081 | 17.8 | 0.097 | 21.4 | 21.6 | . | 13 |
| 22 | 1715 | 15 | 17 | 23 | 0.078 | 17.3 | 0.094 | 20.9 | 20.9 | . | 12 |
| 22 | 1730 | 16 | 17 | 23 | 0.081 | 17.9 | 0.097 | 21.4 | 21.9 | . | 12 |
| 22 | 1745 | 16 | 18 | 24 | 0.082 | 18.1 | 0.097 | 21.5 | 21.9 | . | 12 |
| 22 | 1800 | 16 | 17 | 23 | 0.079 | 17.4 | 0.094 | 20.7 | 20.8 | . | 12 |
| 22 | 1815 | 15 | 17 | 22 | 0.077 | 17.0 | 0.094 | 20.6 | 20.2 | . | 12 |

. REPRESENTS MISSING DATA

GCA/TECHNOLOGY DIVISION

CROWN ZELLERBACH
DUCT BURNER INLET NOX DATA SUMMARY

| DAY | TIME | NOX PPM WET | NOX PPM DRY | NOX ISO | NOX EMISSIONS FD METHOD LB/MBTU | NOX EMISSIONS FD METHOD LB/HR | NOX EMISSIONS FC METHOD LB/MBTU | NOX EMISSIONS FC METHOD LB/HR | NOX EMISSIONS GS METHOD TRANS LB/HR | NOX EMISSIONS GS METHOD TRAV LB/HR | TEST COND |
|---|---|---|---|---|---|---|---|---|---|---|---|
| 22 | 1830 | 16 | 17 | 23 | 0.080 | 17.5 | 0.095 | 20.9 | 20.6 | . | 12 |
| 22 | 1845 | 15 | 17 | 22 | 0.078 | 17.1 | 0.094 | 20.6 | 20.3 | . | 12 |
| 22 | 1900 | 15 | 16 | 22 | 0.077 | 16.6 | 0.092 | 19.9 | 19.9 | . | 12 |
| 22 | 1915 | 15 | 17 | 23 | 0.078 | 16.8 | 0.093 | 20.2 | 20.4 | . | 12 |
| 22 | 1930 | 15 | 16 | 22 | 0.076 | 16.3 | 0.091 | 19.6 | 19.2 | . | 12 |
| 22 | 1945 | 16 | 17 | 23 | 0.078 | 16.9 | 0.093 | 20.2 | 20.4 | . | 12 |
| 22 | 2000 | 15 | 16 | 23 | 0.078 | 17.3 | 0.092 | 20.6 | 20.2 | . | 12 |
| 22 | 2015 | 16 | 17 | 23 | 0.079 | 17.6 | 0.094 | 20.9 | 20.6 | . | 12 |
| 22 | 2015 | 16 | 17 | 23 | 0.079 | 17.6 | 0.094 | 20.9 | 20.6 | . | 12 |
| 22 | 2030 | 15 | 17 | 23 | 0.078 | 17.4 | 0.092 | 20.6 | 20.1 | . | 12 |
| 22 | 2045 | 15 | 16 | 22 | 0.077 | 17.3 | 0.092 | 20.6 | 19.9 | . | 12 |
| 22 | 2100 | 15 | 16 | 22 | 0.076 | 16.8 | 0.090 | 19.8 | 19.6 | . | 12 |
| 22 | 2115 | 15 | 16 | 23 | 0.077 | 17.0 | 0.092 | 20.3 | 19.9 | . | 12 |
| 22 | 2130 | 15 | 16 | 22 | 0.077 | 16.9 | 0.091 | 19.9 | 19.7 | . | 12 |
| 22 | 2145 | 15 | 16 | 22 | 0.075 | 16.4 | 0.090 | 19.8 | 19.2 | . | 12 |
| 22 | 2200 | 15 | 16 | 23 | 0.078 | 17.1 | 0.092 | 20.1 | 20.2 | . | 12 |
| 22 | 2215 | 15 | 16 | 22 | 0.076 | 16.6 | 0.090 | 19.8 | 19.9 | . | 12 |
| 22 | 2230 | 15 | 16 | 23 | 0.076 | 16.7 | 0.089 | 19.6 | 19.8 | . | 12 |
| 22 | 2245 | 15 | 16 | 23 | 0.076 | 16.7 | 0.090 | 19.8 | 19.8 | . | 12 |
| 22 | 2300 | 15 | 16 | 22 | 0.076 | 17.0 | 0.090 | 20.0 | 19.5 | . | 12 |
| 22 | 2315 | 16 | 17 | 23 | 0.078 | 17.5 | 0.092 | 20.5 | 20.5 | . | 12 |
| 22 | 2330 | 16 | 17 | 23 | 0.078 | 17.5 | 0.092 | 20.5 | 20.5 | . | 12 |
| 22 | 2345 | 15 | 17 | 23 | 0.078 | 17.4 | 0.092 | 20.5 | 20.3 | . | 12 |
| 23 | 0 | 15 | 16 | 23 | 0.077 | 16.9 | 0.091 | 20.0 | 20.1 | . | 12 |
| 23 | 15 | 15 | 17 | 23 | 0.076 | 17.2 | 0.091 | 20.1 | 20.4 | . | 12 |
| 23 | 30 | 15 | 16 | 23 | 0.077 | 16.9 | 0.090 | 19.9 | 20.0 | . | 12 |
| 23 | 45 | 15 | 16 | 22 | 0.076 | 16.9 | 0.089 | 19.7 | 19.8 | . | 12 |
| 23 | 100 | 15 | 16 | 23 | 0.076 | 17.3 | 0.090 | 20.4 | 20.1 | . | 12 |
| 23 | 115 | 15 | 16 | 23 | 0.077 | 17.3 | 0.090 | 20.4 | 19.8 | . | . |
| 23 | 130 | 19 | 21 | 29 | 0.098 | 22.1 | 0.114 | 25.9 | 25.2 | . | . |
| 23 | 145 | 33 | 36 | 49 | 0.164 | 37.1 | 0.190 | 43.0 | 44.1 | . | . |
| 23 | 200 | 41 | 44 | 57 | 0.192 | 42.5 | 0.220 | 48.6 | 53.6 | . | . |
| 23 | 215 | 33 | 35 | 49 | 0.166 | 36.6 | 0.195 | 43.0 | 43.0 | . | 13 |
| 23 | 230 | 32 | 34 | 48 | 0.163 | 36.0 | 0.191 | 42.2 | 41.4 | . | 13 |
| 23 | 245 | 33 | 35 | 49 | 0.165 | 36.6 | 0.194 | 42.9 | 42.6 | . | 13 |
| 23 | 300 | 33 | 35 | 49 | 0.163 | 36.2 | 0.193 | 42.7 | 43.0 | . | 13 |
| 23 | 315 | 33 | 35 | 49 | 0.164 | 36.4 | 0.192 | 42.5 | 42.4 | . | 13 |
| 23 | 330 | 31 | 33 | 47 | 0.158 | 35.0 | 0.187 | 41.5 | 41.6 | . | 13 |
| 23 | 345 | 33 | 35 | 49 | 0.164 | 36.4 | 0.193 | 42.8 | 43.6 | . | 13 |
| 23 | 400 | 33 | 35 | 49 | 0.166 | 38.1 | 0.194 | 44.6 | 43.7 | . | 13 |
| 23 | 415 | 33 | 35 | 49 | 0.164 | 37.6 | 0.194 | 44.5 | 42.8 | . | . |
| 23 | 430 | 33 | 35 | 49 | 0.164 | 37.7 | 0.193 | 44.3 | 42.8 | . | . |
| 23 | 445 | 33 | 35 | 48 | 0.163 | 37.4 | 0.192 | 44.0 | 42.6 | . | . |
| 23 | 500 | 29 | 31 | 41 | 0.138 | 29.4 | 0.161 | 34.4 | 37.6 | . | . |
| 23 | 515 | 16 | 17 | 24 | 0.081 | 17.3 | 0.095 | 20.4 | 21.2 | . | 13 |
| 23 | 530 | 16 | 17 | 24 | 0.080 | 17.0 | 0.094 | 20.1 | 20.9 | . | 13 |
| 23 | 545 | 15 | 16 | 23 | 0.077 | 16.5 | 0.092 | 19.7 | 20.2 | . | 13 |
| 23 | 600 | 15 | 16 | 23 | 0.078 | 35.2 | 0.091 | 41.3 | 20.0 | . | 13 |

. REPRESENTS MISSING DATA

GCA/TECHNOLOGY DIVISION

CROWN ZELLERBACH
DUCT BURNER INLET NOX DATA SUMMARY

| DAY | TIME | NOX PPM WET | NOX PPM DRY | NOX ISO | NOX EMISSIONS FD METHOD LB/MBTU | NOX EMISSIONS FD METHOD LB/HR | NOX EMISSIONS FC METHOD LB/MBTU | NOX EMISSIONS FC METHOD LB/HR | NOX EMISSIONS GS METHOD TRANS LB/HR | NOX EMISSIONS GS METHOD TRAV LB/HR | TEST COND |
|---|---|---|---|---|---|---|---|---|---|---|---|
| 23 | 615 | 33 | 36 | 36 | 0.125 | 56.4 | 0.135 | 61.3 | 52.1 | . | . |
| 23 | 630 | 38 | 42 | 38 | 0.130 | 58.6 | 0.141 | 63.8 | 61.9 | . | . |
| 23 | 645 | 37 | 41 | 37 | 0.124 | 58.1 | 0.136 | 62.7 | 61.2 | . | . |
| 23 | 700 | 35 | 39 | 35 | 0.121 | 57.2 | 0.131 | 62.1 | 57.1 | . | . |
| 23 | 715 | 36 | 40 | 35 | 0.122 | 58.0 | 0.133 | 62.6 | 58.1 | . | . |
| 23 | 730 | 35 | 39 | 35 | 0.120 | 56.9 | 0.129 | 61.2 | 56.5 | . | . |
| 23 | 745 | 36 | 39 | 38 | 0.134 | 63.3 | 0.129 | 61.1 | 56.8 | . | . |
| 23 | 915 | 84 | 90 | 92 | 0.319 | 144 | 0.319 | 144 | 130 | 154 | 6 |
| 23 | 930 | 99 | 107 | 110 | 0.381 | 172 | 0.370 | 167 | 153 | 181 | 6 |
| 23 | 945 | 100 | 107 | 111 | 0.384 | 174 | 0.375 | 169 | 155 | 183 | 6 |
| 23 | 1000 | 102 | 109 | 112 | 0.385 | 175 | 0.382 | 172 | 159 | 186 | 6 |
| 23 | 1030 | 97 | 104 | 107 | 0.378 | 170 | 0.372 | 170 | 156 | 178 | 6 |
| 23 | 1045 | 101 | 109 | 110 | 0.388 | 174 | 0.381 | 171 | 161 | 184 | 6 |
| 23 | 1100 | 101 | 109 | 109 | 0.388 | 174 | 0.389 | 175 | 164 | 185 | 6 |
| 23 | 1130 | 103 | 110 | 109 | 0.395 | 173 | 0.394 | 173 | 166 | 188 | 6 |
| 23 | 1145 | 103 | 110 | 109 | 0.390 | 173 | 0.391 | 171 | 163 | 188 | 6 |
| 23 | 1200 | 102 | 109 | 103 | 0.343 | 170 | 0.386 | 167 | 164 | 188 | 6 |
| 23 | 1215 | 104 | 111 | 104 | 0.400 | 173 | 0.396 | 172 | 167 | 191 | 6 |
| 23 | 1230 | 104 | 111 | 104 | 0.400 | 173 | 0.396 | 171 | 166 | 191 | 6 |
| 23 | 1245 | 104 | 111 | 104 | 0.398 | 173 | 0.394 | 171 | 161 | 190 | 6 |
| 23 | 1300 | 104 | 111 | 107 | 0.399 | 172 | 0.393 | 170 | 159 | 198 | 6 |
| 23 | 1315 | 103 | 110 | 107 | 0.396 | 171 | 0.389 | 168 | 160 | 189 | 6 |
| 23 | 1330 | 103 | 110 | 107 | 0.396 | 171 | 0.395 | 171 | 160 | 189 | 6 |
| 23 | 1345 | 104 | 111 | 108 | 0.400 | 173 | 0.404 | 174 | 161 | 191 | 6 |
| 23 | 1400 | 105 | 112 | 109 | 0.402 | 174 | 0.407 | 175 | 162 | 192 | 6 |
| 23 | 1415 | 105 | 112 | 109 | 0.405 | 175 | 0.407 | 177 | 162 | 193 | 6 |
| 23 | 1430 | 105 | 113 | 109 | 0.405 | 176 | 0.406 | 176 | 163 | 193 | 6 |
| 23 | 1445 | 105 | 112 | 109 | 0.405 | 176 | 0.399 | 173 | 161 | 193 | 6 |
| 23 | 1500 | 102 | 109 | 109 | 0.398 | 173 | 0.400 | 174 | 157 | 187 | 6 |
| 23 | 1615 | 41 | 45 | 42 | 0.156 | 69.4 | 0.151 | 67.2 | 64.5 | 75.5 | 1 |
| 23 | 1630 | 40 | 44 | 41 | 0.155 | 68.8 | 0.150 | 66.6 | 64.0 | 74.7 | 1 |
| 23 | 1645 | 40 | 44 | 40 | 0.152 | 67.6 | 0.150 | 66.4 | 63.2 | 74.2 | 1 |
| 23 | 1700 | 40 | 44 | 42 | 0.153 | 68.0 | 0.150 | 66.7 | 63.3 | 74.2 | 1 |
| 23 | 1715 | 40 | 44 | 41 | 0.151 | 67.3 | 0.148 | 65.8 | 62.3 | 73.4 | 1 |
| 23 | 1730 | 39 | 43 | 41 | 0.149 | 66.5 | 0.147 | 65.6 | 62.0 | 72.7 | 1 |
| 23 | 1745 | 39 | 43 | 40 | 0.148 | 65.8 | 0.148 | 65.9 | 61.5 | 71.8 | 1 |
| 23 | 1800 | 38 | 42 | 41 | 0.146 | 66.6 | 0.146 | 66.8 | 60.5 | 70.0 | 1 |
| 23 | 1815 | 36 | 39 | 39 | 0.138 | 62.9 | 0.138 | 63.1 | 58.9 | 66.1 | 1 |
| 23 | 1830 | 36 | 40 | 39 | 0.139 | 67.5 | 0.133 | 63.0 | 57.5 | 67.5 | 1 |
| 23 | 1845 | 36 | 42 | 41 | 0.144 | 69.6 | 0.144 | 65.5 | 58.8 | 70.1 | 1 |
| 23 | 1900 | 39 | 43 | 42 | 0.147 | 67.7 | 0.147 | 67.3 | 60.6 | 71.6 | 1 |
| 23 | 1915 | 39 | 43 | 42 | 0.147 | 67.6 | 0.148 | 68.1 | 60.4 | 71.7 | 1 |
| 23 | 1930 | 39 | 43 | 43 | 0.149 | 68.3 | 0.150 | 68.9 | 61.2 | 72.2 | 1 |
| 23 | 1945 | 39 | 43 | 42 | 0.147 | 67.4 | 0.146 | 67.0 | 60.9 | 71.6 | 1 |
| 23 | 2000 | 40 | 45 | 43 | 0.153 | 70.6 | 0.151 | 69.6 | 63.3 | 74.8 | 1 |
| 23 | 2015 | 40 | 44 | 43 | 0.152 | 69.9 | 0.149 | 68.3 | 62.8 | 74.2 | 1 |
| 23 | 2030 | 39 | 43 | 42 | 0.148 | 68.4 | 0.145 | 66.9 | 61.3 | 72.6 | 1 |
| 23 | 2045 | 40 | 44 | 42 | 0.149 | 68.8 | 0.146 | 67.5 | 62.1 | 73.2 | 1 |

GCA/TECHNOLOGY DIVISION

CROWN ZELLERBACH
DUCT BURNER INLET NOX DATA SUMMARY

| DAY | TIME | NOX PPM WET | NOX PPM DRY | NOX ISO | NOX EMISSIONS FD METHOD LB/MBTU | NOX EMISSIONS FD METHOD LB/HR | NOX EMISSIONS FC METHOD LB/MBTU | NOX EMISSIONS FC METHOD LB/HR | NOX EMISSIONS GS METHOD TRANS LB/HR | NOX EMISSIONS GS METHOD TRAV LB/HR | TEST COND |
|---|---|---|---|---|---|---|---|---|---|---|---|
| 23 | 2100 | 40 | 44 | 43 | 0.150 | 70.3 | 0.146 | 68.5 | 61.7 | 73.1 | 1 |
| 23 | 2115 | 40 | 44 | 43 | 0.151 | 70.9 | 0.148 | 69.4 | 62.7 | 74.0 | 1 |
| 23 | 2130 | 38 | 42 | 42 | 0.145 | 68.2 | 0.142 | 66.6 | 57.1 | 70.1 | 1 |
| 23 | 2145 | 40 | 44 | 43 | 0.150 | 70.6 | 0.147 | 68.6 | 62.3 | 73.6 | 1 |
| 23 | 2200 | 40 | 44 | 44 | 0.151 | 67.4 | 0.147 | 65.8 | 62.1 | 73.5 | 1 |
| 23 | 2215 | 40 | 44 | 44 | 0.152 | 67.8 | 0.148 | 66.0 | 62.8 | . | 2 |
| 23 | 2230 | 38 | 42 | 41 | 0.143 | 63.9 | 0.139 | 62.1 | 59.5 | . | 2 |
| 23 | 2245 | 38 | 42 | 42 | 0.144 | 64.5 | 0.139 | 62.4 | 60.5 | . | 2 |
| 23 | 2300 | 38 | 42 | 42 | 0.145 | 33.6 | 0.140 | 32.7 | 61.7 | . | 2 |
| 23 | 2315 | 23 | 25 | 38 | 0.131 | 30.5 | 0.130 | 30.4 | 32.0 | . | . |
| 23 | 2330 | 26 | 28 | 52 | 0.179 | 41.8 | 0.177 | 41.3 | 38.6 | . | . |
| 23 | 2345 | 23 | 24 | 44 | 0.153 | 35.8 | 0.150 | 35.0 | 33.3 | . | . |
| 24 | 0 | 16 | 17 | 30 | 0.104 | 22.8 | 0.104 | 22.7 | 23.4 | . | . |
| 24 | 15 | 17 | 18 | 32 | 0.110 | 24.0 | 0.108 | 23.6 | 24.4 | . | 12 |
| 24 | 30 | 17 | 18 | 33 | 0.113 | 24.8 | 0.113 | 24.8 | 25.1 | . | 12 |
| 24 | 45 | 18 | 19 | 34 | 0.118 | 25.8 | 0.116 | 25.5 | 26.2 | . | 12 |
| 24 | 100 | 18 | 19 | 35 | 0.118 | 26.5 | 0.118 | 26.5 | 26.5 | . | 12 |
| 24 | 115 | 18 | 19 | 34 | 0.117 | 26.2 | 0.117 | 26.1 | 25.8 | . | 12 |
| 24 | 130 | 18 | 19 | 34 | 0.117 | 26.2 | 0.117 | 26.1 | 26.0 | . | 12 |
| 24 | 145 | 18 | 19 | 34 | 0.117 | 26.2 | 0.117 | 26.2 | 26.1 | . | 12 |
| 24 | 200 | 18 | 19 | 35 | 0.120 | 29.1 | 0.119 | 28.8 | 26.9 | . | 12 |
| 24 | 215 | 19 | 20 | 36 | 0.121 | 29.5 | 0.121 | 29.4 | 27.9 | . | 12 |
| 24 | 230 | 21 | 23 | 39 | 0.132 | 32.0 | 0.130 | 31.5 | 31.9 | . | 12 |
| 24 | 245 | 23 | 25 | 40 | 0.137 | 33.3 | 0.137 | 33.2 | 34.7 | . | 12 |
| 24 | 300 | 22 | 23 | 38 | 0.131 | 31.4 | 0.130 | 31.1 | 31.8 | . | 12 |
| 24 | 315 | 20 | 22 | 37 | 0.126 | 30.2 | 0.126 | 30.2 | 30.4 | . | 12 |
| 24 | 330 | 20 | 22 | 37 | 0.126 | 30.2 | 0.125 | 29.9 | 30.2 | . | 12 |
| 24 | 345 | 19 | 21 | 35 | 0.121 | 28.9 | 0.121 | 28.9 | 28.7 | . | 12 |
| 24 | 400 | 20 | 21 | 37 | 0.125 | 29.1 | 0.124 | 28.9 | 30.0 | . | 12 |
| 24 | 415 | 20 | 21 | 37 | 0.125 | 29.0 | 0.124 | 28.8 | 30.2 | . | 12 |
| 24 | 430 | 20 | 21 | 36 | 0.124 | 28.8 | 0.124 | 28.9 | 29.5 | . | 12 |
| 24 | 445 | 20 | 21 | 36 | 0.123 | 28.6 | 0.122 | 28.4 | 28.8 | . | 12 |
| 24 | 500 | 19 | 20 | 36 | 0.121 | 28.1 | 0.120 | 28.0 | 28.3 | . | 12 |
| 24 | 515 | 19 | 20 | 36 | 0.121 | 37.9 | 0.121 | 37.9 | 28.2 | . | 13 |
| 24 | 530 | 19 | 20 | 35 | 0.118 | 36.9 | 0.117 | 36.7 | 27.3 | . | 13 |
| 24 | 545 | 19 | 20 | 35 | 0.119 | 37.1 | 0.119 | 37.2 | 27.9 | . | 13 |
| 24 | 600 | 19 | 20 | 35 | 0.120 | 37.7 | 0.119 | 37.3 | 28.3 | . | 13 |
| 24 | 615 | 35 | 39 | 43 | 0.148 | 46.3 | 0.143 | 44.7 | 57.1 | . | . |
| 24 | 630 | 39 | 43 | 42 | 0.146 | 68.2 | 0.142 | 66.3 | 63.6 | . | . |
| 24 | 645 | 36 | 40 | 40 | 0.137 | 63.9 | 0.134 | 62.5 | 59.3 | . | . |
| 24 | 700 | 36 | 40 | 39 | 0.136 | 63.4 | 0.133 | 62.1 | 59.0 | . | . |
| 24 | 715 | 36 | 40 | 39 | 0.136 | 64.3 | 0.132 | 62.4 | 59.1 | . | 3 |
| 24 | 730 | 35 | 39 | 38 | 0.131 | 61.7 | 0.128 | 60.2 | 56.4 | . | 3 |
| 24 | 1030 | 57 | 62 | 59 | 0.217 | 98.4 | 0.219 | 99.1 | 90.8 | 106 | 4 |
| 24 | 1045 | 56 | 61 | 58 | 0.215 | 97.2 | 0.208 | 94.0 | 88.8 | 105 | 4 |
| 24 | 1100 | 57 | 62 | 60 | 0.219 | 97.9 | 0.217 | 96.9 | 90.4 | 106 | 4 |
| 24 | 1115 | 56 | 61 | 59 | 0.215 | 96.1 | 0.213 | 95.1 | 89.0 | 104 | 4 |
| 24 | 1130 | 57 | 61 | 59 | 0.217 | 97.1 | 0.211 | 94.4 | 89.9 | 105 | 4 |

. REPRESENTS MISSING DATA

GCA/TECHNOLOGY DIVISION

CROWN ZELLERBACH
DUCT BURNER INLET NOX DATA SUMMARY

| DAY | TIME | NOX PPM WET | NOX PPM DRY | NOX ISO | NOX EMISSIONS FD METHOD LB/MBTU | NOX EMISSIONS FD METHOD LB/HR | NOX EMISSIONS FC METHOD LB/MBTU | NOX EMISSIONS FC METHOD LB/HR | NOX EMISSIONS GS METHOD TRANS LB/HR | NOX EMISSIONS GS METHOD TRAV LB/HR | TEST COND |
|---|---|---|---|---|---|---|---|---|---|---|---|
| 24 | 1145 | 57 | 62 | 60 | 0.219 | 97.8 | 0.214 | 95.7 | 91.2 | 106 | 4 |
| 24 | 1200 | 58 | 63 | 59 | 0.221 | 99.0 | 0.219 | 98.4 | 91.3 | 108 | 4 |
| 24 | 1215 | 55 | 60 | 56 | 0.209 | 93.8 | 0.209 | 93.7 | 86.0 | 102 | 4 |
| 24 | 1230 | 55 | 60 | 56 | 0.209 | 93.6 | 0.210 | 94.2 | 86.0 | 102 | 4 |
| 24 | 1245 | 56 | 61 | 58 | 0.214 | 96.1 | 0.213 | 95.5 | 87.5 | 105 | 4 |
| 24 | 1300 | 55 | 60 | 57 | 0.210 | 89.7 | 0.209 | 89.2 | 83.7 | 103 | 4 |
| 24 | 1315 | 55 | 60 | 56 | 0.209 | 89.2 | 0.208 | 89.1 | 83.8 | 103 | 4 |
| 24 | 1330 | 53 | 58 | 55 | 0.203 | 86.7 | 0.202 | 86.4 | 81.3 | 99.7 | 4 |
| 24 | 1345 | 55 | 60 | 57 | 0.209 | 89.5 | 0.207 | 88.7 | 84.9 | 103 | 4 |
| 24 | 1400 | 56 | 60 | 57 | 0.210 | 90.8 | 0.207 | 89.3 | 84.9 | 104 | 4 |
| 24 | 1415 | 56 | 60 | 57 | 0.210 | 90.6 | 0.207 | 89.3 | 84.9 | 103 | 4 |
| 24 | 1430 | 56 | 61 | 57 | 0.211 | 91.1 | 0.208 | 89.6 | 85.3 | 104 | 4 |
| 24 | 1445 | 55 | 59 | 56 | 0.207 | 89.3 | 0.203 | 89.3 | 83.0 | 102 | 4 |
| 24 | 1500 | 56 | 61 | 57 | 0.213 | 93.6 | 0.217 | 95.5 | 85.0 | 104 | 4 |
| 24 | 1515 | 54 | 59 | 55 | 0.205 | 90.2 | 0.210 | 92.4 | 82.6 | 101 | 4 |
| 24 | 1530 | 52 | 57 | 48 | 0.176 | 77.6 | 0.197 | 86.7 | 82.1 | 97.1 | 4 |
| 24 | 1545 | 54 | 59 | 51 | 0.191 | 84.2 | 0.210 | 92.7 | 83.0 | 101 | 4 |
| 24 | 1600 | 53 | 58 | 50 | 0.186 | 81.6 | 0.206 | 89.6 | 81.6 | 98.7 | 4 |
| 24 | 1615 | 54 | 59 | 52 | 0.194 | 84.4 | 0.212 | 92.0 | 83.4 | 101 | 4 |
| 24 | 1630 | 55 | 60 | 52 | 0.192 | 83.2 | 0.215 | 93.3 | 84.4 | 103 | 4 |

. REPRESENTS MISSING DATA

GCA/TECHNOLOGY DIVISION

CROWN ZELLERBACH
DUCT BURNER OUTLET NOX DATA SUMMARY

| DAY | TIME | NOX PPM WET | CZ NOX PPM WET | NOX PPM DRY | NOX EMISSIONS FD METHOD LB/MBTU | NOX EMISSIONS FD METHOD LB/HR | NOX EMISSIONS FC METHOD LB/MBTU | NOX EMISSIONS FC METHOD LB/HR | NOX EMISSIONS QS METHOD TRANS LB/HR | NOX EMISSIONS QS METHOD TRAV LB/HR | TEST COND |
|---|---|---|---|---|---|---|---|---|---|---|---|
| 15 | 1800 | 37 | . | 41 | 0.135 | 34.7 | 0.150 | 38.8 | 54.4 | . | . |
| 15 | 1815 | 37 | . | 40 | 0.135 | 34.5 | 0.150 | 38.8 | 55.1 | . | . |
| 15 | 1830 | 36 | 34 | 40 | 0.133 | 46.9 | 0.148 | 52.3 | 54.8 | . | . |
| 15 | 1845 | 38 | 34 | 41 | 0.132 | 46.5 | 0.145 | 51.3 | 56.1 | 25.4 | 8 |
| 15 | 1900 | 38 | 33 | 41 | 0.133 | 46.8 | 0.147 | 51.7 | 57.3 | 25.6 | 8 |
| 15 | 1915 | 39 | 34 | 42 | 0.134 | 47.2 | 0.148 | 52.1 | 53.8 | 25.9 | 8 |
| 15 | 1930 | 38 | 38 | 41 | 0.133 | 46.8 | 0.147 | 51.6 | 50.6 | 25.8 | 8 |
| 15 | 1945 | 38 | . | 41 | 0.132 | 46.1 | 0.146 | 51.0 | 46.2 | 25.3 | 8 |
| 15 | 2000 | 38 | 35 | 41 | 0.131 | 46.0 | 0.145 | 50.7 | 46.2 | 25.2 | 8 |
| 15 | 2015 | 36 | 34 | 39 | 0.125 | 43.8 | 0.138 | 48.3 | 44.8 | 24.0 | 8 |
| 15 | 2030 | 37 | 34 | 40 | 0.130 | 45.6 | 0.144 | 50.4 | 47.4 | 25.1 | 8 |
| 15 | 2045 | 38 | 36 | 41 | 0.132 | 46.3 | 0.146 | 51.2 | 46.7 | 25.4 | 8 |
| 15 | 2100 | 38 | 36 | 41 | 0.130 | 46.6 | 0.144 | 51.5 | 33.1 | 25.3 | 8 |
| 15 | 2130 | 40 | 37 | 44 | 0.139 | 48.9 | 0.153 | 54.0 | 34.0 | 27.1 | 8 |
| 15 | 2145 | 38 | 37 | 41 | 0.129 | 45.9 | 0.143 | 50.5 | 36.0 | 25.3 | 8 |
| 15 | 2200 | 39 | 38 | 42 | 0.134 | 48.0 | 0.147 | 52.6 | 33.8 | 26.3 | 8 |
| 15 | 2215 | 37 | 38 | 40 | 0.125 | 44.9 | 0.138 | 49.3 | 25.1 | 24.7 | 8 |
| 15 | 2230 | 39 | 39 | 42 | 0.132 | 46.9 | 0.145 | 51.6 | 26.0 | 26.0 | 8 |
| 15 | 2245 | 37 | 38 | 39 | 0.129 | 45.3 | 0.144 | 50.9 | 25.5 | 24.8 | 8 |
| 15 | 2300 | 40 | 40 | 44 | 0.136 | 48.0 | 0.153 | 53.2 | 48.0 | 27.2 | 8 |
| 15 | 2315 | 41 | . | 44 | 0.140 | 49.6 | 0.154 | 53.5 | 46.1 | 27.5 | 8 |
| 16 | 15 | 42 | . | 46 | 0.148 | 51.9 | 0.164 | 57.7 | 51.6 | . | 9 |
| 16 | 30 | 42 | . | 46 | 0.149 | 52.1 | 0.164 | 57.7 | 54.9 | . | 9 |
| 16 | 45 | 42 | . | 46 | 0.148 | 52.1 | 0.165 | 57.9 | 60.0 | . | 9 |
| 16 | 100 | 42 | . | 46 | 0.148 | 50.0 | 0.166 | 55.8 | 55.9 | . | 9 |
| 16 | 115 | 41 | . | 45 | 0.147 | 49.5 | 0.164 | 55.3 | 58.9 | . | 9 |
| 16 | 130 | 41 | . | 45 | 0.146 | 49.0 | 0.162 | 54.5 | 65.7 | . | 9 |
| 16 | 145 | 41 | . | 45 | 0.144 | 48.6 | 0.161 | 54.1 | 64.1 | . | 9 |
| 16 | 200 | 42 | . | 46 | 0.149 | 50.5 | 0.166 | 56.3 | 70.2 | . | 9 |
| 16 | 215 | 43 | . | 47 | 0.152 | 51.7 | 0.171 | 58.0 | 60.8 | . | 9 |
| 16 | 230 | 42 | . | 46 | 0.152 | 51.4 | 0.169 | 57.5 | 63.0 | . | 9 |
| 16 | 245 | 41 | . | 45 | 0.147 | 50.0 | 0.165 | 55.9 | 50.2 | . | 9 |
| 16 | 300 | 41 | . | 45 | 0.147 | 49.8 | 0.165 | 55.8 | 47.7 | . | 9 |
| 16 | 315 | 41 | . | 45 | 0.147 | 49.6 | 0.163 | 55.3 | 49.6 | . | 9 |
| 16 | 330 | 41 | . | 45 | 0.148 | 50.0 | 0.165 | 55.8 | 54.6 | . | 9 |
| 16 | 345 | 41 | . | 45 | 0.147 | 49.8 | 0.164 | 55.6 | 64.3 | . | 9 |
| 16 | 400 | 40 | . | 44 | 0.144 | 46.3 | 0.161 | 51.8 | 70.2 | . | 9 |
| 16 | 415 | 41 | . | 45 | 0.145 | 46.7 | 0.162 | 52.1 | 68.7 | . | 9 |
| 16 | 430 | 41 | . | 45 | 0.145 | 46.6 | 0.163 | 52.2 | 66.2 | . | 9 |
| 16 | 445 | 39 | . | 43 | 0.137 | 44.0 | 0.152 | 48.8 | 60.3 | . | 9 |
| 16 | 500 | 41 | . | 45 | 0.146 | 54.1 | 0.164 | 60.5 | 64.6 | . | 9 |
| 16 | 515 | 41 | . | 45 | 0.145 | 53.5 | 0.162 | 60.0 | 66.2 | . | 9 |
| 16 | 530 | 41 | . | 45 | 0.145 | 53.4 | 0.162 | 59.7 | 67.1 | . | 9 |
| 16 | 545 | 41 | . | 45 | 0.145 | 53.6 | 0.162 | 59.8 | 67.6 | . | 9 |
| 16 | 600 | 41 | . | 45 | 0.146 | 74.4 | 0.164 | 83.5 | 68.3 | . | 9 |
| 16 | 615 | 57 | . | 64 | 0.186 | 94.7 | 0.200 | 102 | 115 | . | . |
| 16 | 630 | 42 | . | 47 | 0.131 | 66.7 | 0.141 | 71.5 | 97.7 | . | . |
| 16 | 645 | 42 | . | 47 | 0.131 | 66.6 | 0.140 | 71.3 | 91.5 | . | . |

. REPRESENTS MISSING DATA

GCA/TECHNOLOGY DIVISION

CROWN ZELLERBACH
DUCT BURNER OUTLET NOX DATA SUMMARY

| DAY | TIME | NOX PPM WET | CZ NOX PPM WET | NOX PPM DRY | NOX EMISSIONS FD METHOD LB/MBTU | NOX EMISSIONS FD METHOD LB/HR | NOX EMISSIONS FC METHOD LB/MBTU | NOX EMISSIONS FC METHOD LB/HR | NOX EMISSIONS GS METHOD TRANS LB/HR | NOX EMISSIONS GS METHOD TRAV LB/HR | TEST COND |
|---|---|---|---|---|---|---|---|---|---|---|---|
| 16 | 700 | 41 | . | 46 | 0.128 | 67.2 | 0.137 | 72.0 | 83.6 | . | . |
| 16 | 715 | 40 | . | 45 | 0.126 | 66.4 | 0.135 | 71.2 | 83.0 | . | 3 |
| 16 | 730 | 40 | . | 45 | 0.125 | 66.0 | 0.134 | 70.7 | 79.8 | . | 3 |
| 16 | 745 | 40 | . | 45 | 0.124 | 65.4 | 0.133 | 70.0 | 76.7 | . | 3 |
| 16 | 800 | 40 | . | 45 | 0.124 | 65.9 | 0.133 | 70.7 | 75.7 | . | 3 |
| 16 | 815 | 39 | . | 44 | 0.122 | 65.3 | 0.131 | 70.0 | 72.3 | . | 3 |
| 16 | 830 | 36 | . | 40 | 0.112 | 59.6 | 0.121 | 64.3 | 66.6 | . | 3 |
| 16 | 845 | 38 | . | 43 | 0.119 | 63.4 | 0.128 | 68.0 | 69.6 | . | 3 |
| 16 | 900 | 38 | . | 43 | 0.118 | 60.6 | 0.127 | 65.1 | 68.3 | . | 3 |
| 16 | 915 | 38 | . | 43 | 0.120 | 61.3 | 0.128 | 65.8 | 73.1 | . | . |
| 16 | 930 | 39 | . | 43 | 0.120 | 61.4 | 0.129 | 65.9 | 70.6 | . | . |
| 16 | 1100 | 37 | 34 | 41 | 0.112 | 64.2 | 0.121 | 69.1 | 65.6 | . | 1 |
| 16 | 1100 | 37 | . | 41 | 0.112 | 62.3 | 0.121 | 67.0 | 65.6 | . | 1 |
| 16 | 1115 | 38 | 38 | 42 | 0.116 | 61.1 | 0.126 | 66.1 | 67.4 | . | . |
| 16 | 1130 | 38 | . | 43 | 0.119 | 62.6 | 0.128 | 67.4 | 68.8 | . | . |
| 16 | 1145 | 39 | . | 43 | 0.116 | 60.9 | 0.124 | 65.0 | 68.9 | . | . |
| 16 | 1200 | 40 | 35 | 45 | 0.118 | 62.4 | 0.126 | 66.5 | 70.7 | . | . |
| 16 | 1215 | 34 | 35 | 38 | 0.112 | 55.8 | 0.127 | 63.4 | 55.9 | . | . |
| 16 | 1230 | 35 | 33 | 39 | 0.113 | 56.3 | 0.125 | 61.6 | 57.2 | . | . |
| 16 | 1245 | 37 | 37 | 41 | 0.117 | 58.7 | 0.129 | 64.3 | 58.8 | . | . |
| 16 | 1300 | 37 | 36 | 41 | 0.117 | 58.6 | 0.129 | 64.1 | 58.1 | . | . |
| 16 | 1315 | 37 | 37 | 41 | 0.118 | 58.7 | 0.129 | 64.1 | 61.6 | . | . |
| 16 | 1330 | 37 | 38 | 41 | 0.119 | 59.3 | 0.130 | 64.9 | 66.6 | . | . |
| 16 | 1345 | 37 | 34 | 41 | 0.118 | 58.9 | 0.129 | 64.6 | 68.0 | . | . |
| 16 | 1345 | 37 | 34 | 41 | 0.119 | 59.2 | 0.130 | 64.9 | 68.8 | . | . |
| 16 | 1400 | 37 | 38 | 41 | 0.118 | 58.9 | 0.130 | 64.6 | 68.8 | . | . |
| 16 | 1415 | 28 | 36 | 31 | 0.109 | 54.1 | 0.131 | 65.2 | 48.7 | . | . |
| 16 | 1430 | 34 | 41 | 35 | 0.109 | 54.4 | 0.120 | 59.9 | 59.3 | . | . |
| 16 | 1445 | 38 | 37 | 42 | 0.122 | 60.6 | 0.133 | 66.2 | 65.3 | . | . |
| 16 | 1500 | 38 | 38 | 42 | 0.122 | 60.2 | 0.133 | 65.9 | 65.8 | . | . |
| 16 | 1515 | 28 | 38 | 31 | 0.092 | 45.6 | 0.104 | 51.5 | 46.3 | . | . |
| 16 | 1530 | 34 | 35 | 38 | 0.111 | 54.9 | 0.122 | 60.6 | 55.6 | . | . |
| 16 | 1545 | 32 | 38 | 35 | 0.108 | 52.6 | 0.119 | 59.1 | 52.2 | . | . |
| 16 | 1600 | 37 | 36 | 41 | 0.118 | 58.7 | 0.129 | 64.0 | 60.8 | . | . |
| 16 | 1615 | 39 | 35 | 43 | 0.123 | 61.1 | 0.134 | 66.5 | 63.5 | . | . |
| 16 | 1630 | 38 | 34 | 42 | 0.122 | 60.5 | 0.133 | 66.1 | 63.6 | . | . |
| 16 | 1645 | 36 | 37 | 40 | 0.115 | 56.9 | 0.125 | 62.0 | 60.6 | 75.4 | 3 |
| 16 | 1700 | 39 | . | 44 | 0.126 | 63.2 | 0.138 | 69.1 | 64.0 | 82.8 | 3 |
| 16 | 1715 | 39 | 35 | 43 | 0.123 | 61.7 | 0.135 | 67.7 | 63.0 | 81.2 | 3 |
| 16 | 1730 | 35 | 36 | 39 | 0.110 | 55.3 | 0.121 | 60.7 | 57.3 | 72.6 | 3 |
| 16 | 1745 | 37 | 35 | 41 | 0.118 | 59.2 | 0.130 | 65.0 | 59.8 | 77.7 | 3 |
| 16 | 1800 | 37 | 35 | 41 | 0.118 | 59.0 | 0.129 | 64.7 | 58.5 | 77.3 | 3 |
| 16 | 1815 | 38 | 37 | 42 | 0.120 | 60.4 | 0.131 | 66.0 | 54.2 | 79.0 | 3 |
| 16 | 1830 | 38 | 37 | 42 | 0.120 | 60.3 | 0.131 | 65.9 | 51.0 | 78.9 | 3 |
| 16 | 1845 | 37 | 38 | 41 | 0.118 | 59.2 | 0.129 | 64.7 | 58.5 | 77.5 | 3 |
| 16 | 1900 | 37 | 38 | 42 | 0.119 | 59.5 | 0.130 | 65.3 | 62.4 | 78.2 | 3 |
| 16 | 1915 | 35 | 38 | 40 | 0.113 | 56.6 | 0.123 | 62.0 | 57.8 | 74.1 | 3 |
| 16 | 1930 | 37 | 37 | 41 | 0.118 | 59.2 | 0.129 | 64.8 | 60.8 | 77.4 | 3 |

. REPRESENTS MISSING DATA

GCA/TECHNOLOGY DIVISION

CROWN ZELLERBACH
DUCT BURNER OUTLET NOX DATA SUMMARY

| DAY | TIME | CZ NOX PPM WET | CZ NOX PPM WET | CZ NOX PPM DRY | NOX EMISSIONS FD METHOD LB/MBTU | NOX EMISSIONS FD METHOD LB/HR | NOX EMISSIONS FC METHOD LB/MBTU | NOX EMISSIONS FC METHOD LB/HR | NOX EMISSIONS GS METHOD TRANS LB/HR | NOX EMISSIONS GS METHOD TRAV LB/HR | TEST COND |
|---|---|---|---|---|---|---|---|---|---|---|---|
| 16 | 1945 | 37 | 36 | 42 | 0.119 | 59.9 | 0.130 | 65.3 | 59.7 | 78.2 | 3 |
| 16 | 2000 | 37 | 36 | 42 | 0.119 | 60.2 | 0.130 | 65.6 | 56.6 | 78.3 | 3 |
| 16 | 2015 | 37 | 38 | 41 | 0.117 | 59.1 | 0.127 | 64.3 | 57.0 | 76.8 | 3 |
| 16 | 2030 | 37 | 36 | 42 | 0.119 | 59.9 | 0.129 | 65.2 | 57.9 | 78.0 | 3 |
| 16 | 2115 | 39 | . | 44 | 0.116 | 64.9 | 0.125 | 70.5 | 62.6 | . | 2 |
| 16 | 2130 | 37 | . | 41 | 0.107 | 59.9 | 0.116 | 65.2 | 55.8 | . | 2 |
| 16 | 2145 | 40 | . | 45 | 0.117 | 66.0 | 0.127 | 71.6 | 61.7 | . | 2 |
| 16 | 2200 | 40 | . | 45 | 0.117 | 59.3 | 0.127 | 64.3 | 62.0 | . | 2 |
| 16 | 2215 | 40 | . | 45 | 0.117 | 59.0 | 0.126 | 63.8 | 61.5 | . | . |
| 16 | 2230 | 40 | . | 45 | 0.117 | 59.3 | 0.127 | 64.1 | 62.6 | . | . |
| 16 | 2245 | 40 | . | 45 | 0.115 | 58.3 | 0.125 | 63.2 | 61.3 | . | . |
| 16 | 2300 | 29 | . | 32 | 0.093 | 33.8 | 0.104 | 37.9 | 37.6 | . | . |
| 16 | 2315 | 20 | . | 22 | 0.067 | 24.3 | 0.075 | 27.3 | 23.3 | . | 1 |
| 16 | 2330 | 20 | . | 22 | 0.065 | 23.6 | 0.073 | 26.5 | 21.5 | . | 1 |
| 16 | 2345 | 20 | . | 22 | 0.065 | 23.7 | 0.073 | 26.6 | 20.4 | . | 1 |
| 17 | 0 | 20 | . | 22 | 0.064 | 23.1 | 0.072 | 25.8 | 19.5 | . | 1 |
| 17 | 15 | 19 | . | 21 | 0.063 | 22.5 | 0.070 | 25.1 | 18.1 | . | . |
| 17 | 30 | 20 | . | 22 | 0.064 | 23.1 | 0.072 | 25.8 | 18.3 | . | . |
| 17 | 45 | 20 | . | 22 | 0.064 | 22.8 | 0.071 | 25.5 | 18.4 | . | . |
| 17 | 100 | 19 | . | 21 | 0.065 | 26.9 | 0.072 | 30.7 | 18.2 | . | . |
| 17 | 115 | 31 | . | 34 | 0.093 | 39.5 | 0.100 | 42.8 | 32.8 | . | . |
| 17 | 130 | 33 | . | 36 | 0.103 | 43.7 | 0.113 | 48.3 | 36.4 | . | . |
| 17 | 145 | 27 | . | 30 | 0.083 | 35.2 | 0.091 | 38.6 | 25.6 | . | . |
| 17 | 200 | 26 | . | 31 | 0.088 | 33.3 | 0.097 | 36.8 | 25.8 | . | . |
| 17 | 215 | 25 | . | 28 | 0.079 | 30.1 | 0.086 | 33.3 | 21.5 | . | 1 |
| 17 | 230 | 25 | . | 27 | 0.078 | 29.7 | 0.087 | 32.8 | 22.6 | . | 1 |
| 17 | 245 | 24 | . | 26 | 0.076 | 28.7 | 0.084 | 31.8 | 21.5 | . | 1 |
| 17 | 300 | 24 | . | 26 | 0.076 | 29.0 | 0.084 | 32.0 | 18.3 | . | 1 |
| 17 | 315 | 19 | . | 21 | 0.060 | 23.0 | 0.067 | 25.4 | 12.6 | . | 1 |
| 17 | 330 | 24 | . | 26 | 0.075 | 28.6 | 0.083 | 31.7 | 15.4 | . | 1 |
| 17 | 345 | 24 | . | 26 | 0.075 | 28.7 | 0.083 | 31.7 | 8.8 | . | 1 |
| 17 | 400 | 23 | . | 26 | 0.074 | 28.3 | 0.082 | 31.2 | 10.3 | . | 1 |
| 17 | 415 | 23 | . | 25 | 0.073 | 28.0 | 0.081 | 30.9 | 17.9 | . | 1 |
| 17 | 430 | 23 | . | 25 | 0.073 | 27.8 | 0.080 | 30.7 | 20.0 | . | 1 |
| 17 | 445 | 23 | . | 26 | 0.074 | 28.3 | 0.082 | 31.2 | 20.5 | . | 1 |
| 17 | 500 | 23 | . | 26 | 0.074 | 29.1 | 0.081 | 32.1 | 20.2 | . | 1 |
| 17 | 515 | 23 | . | 25 | 0.073 | 26.9 | 0.081 | 31.9 | 19.7 | . | . |
| 17 | 530 | 22 | . | 25 | 0.072 | 28.3 | 0.079 | 31.3 | 19.0 | . | . |
| 17 | 545 | 26 | . | 29 | 0.081 | 31.9 | 0.088 | 34.9 | 26.2 | . | . |
| 17 | 600 | 28 | . | 31 | 0.097 | 46.0 | 0.095 | 50.4 | 27.0 | . | . |
| 17 | 615 | 38 | . | 42 | 0.113 | 60.1 | 0.122 | 64.9 | 44.8 | . | . |
| 17 | 630 | 38 | . | 42 | 0.114 | 60.3 | 0.123 | 65.3 | 58.7 | . | . |
| 17 | 645 | 38 | . | 42 | 0.113 | 59.9 | 0.122 | 64.9 | 56.9 | . | . |
| 17 | 700 | 37 | . | 42 | 0.112 | 60.6 | 0.122 | 65.9 | 40.4 | . | . |
| 17 | 715 | 37 | . | 41 | 0.111 | 60.2 | 0.121 | 65.3 | 42.3 | . | 3 |
| 17 | 730 | 36 | . | 41 | 0.110 | 59.6 | 0.120 | 64.9 | 46.2 | . | 3 |
| 17 | 745 | 37 | . | 42 | 0.112 | 60.4 | 0.121 | 65.6 | 64.9 | . | 3 |
| 17 | 800 | 38 | . | 42 | 0.114 | 61.8 | 0.124 | 67.1 | 69.1 | . | 3 |

. REPRESENTS MISSING DATA

GCA/TECHNOLOGY DIVISION

CROWN ZELLERBACH
DUCT BURNER OUTLET NOX DATA SUMMARY

| DAY | TIME | NOX PPM WET | CZ NOX PPM WET | NOX PPM DRY | NOX EMISSIONS FD METHOD LB/MBTU | NOX EMISSIONS FD METHOD LB/HR | NOX EMISSIONS FC METHOD LB/MBTU | NOX EMISSIONS FC METHOD LB/HR | NOX EMISSIONS QS METHOD TRANS LB/HR | NOX EMISSIONS QS METHOD TRAV LB/HR | TEST COND |
|---|---|---|---|---|---|---|---|---|---|---|---|
| 17 | 815 | 38 | . | 42 | 0.118 | 61.0 | 0.130 | 67.2 | 68.6 | . | . |
| 17 | 1000 | 41 | . | 46 | 0.134 | 67.0 | 0.146 | 72.8 | 75.6 | . | . |
| 17 | 1015 | 41 | . | 46 | 0.133 | 66.4 | 0.143 | 71.4 | 75.7 | . | . |
| 17 | 1030 | 55 | 108 | 60 | 0.173 | 85.4 | 0.187 | 92.4 | 107 | . | . |
| 17 | 1045 | 107 | 109 | 116 | 0.353 | 175 | 0.384 | 190 | 204 | . | . |
| 17 | 1100 | 105 | 103 | 115 | 0.346 | 169 | 0.376 | 184 | 194 | . | . |
| 17 | 1115 | 105 | 102 | 114 | 0.345 | 169 | 0.374 | 183 | 191 | . | . |
| 17 | 1130 | 108 | 109 | 117 | 0.353 | 173 | 0.384 | 187 | . | . | . |
| 17 | 1145 | 100 | 111 | 109 | 0.329 | 161 | 0.358 | 175 | . | . | . |
| 17 | 1200 | 107 | 107 | 116 | 0.351 | 159 | 0.382 | 173 | . | . | . |
| 17 | 1215 | 105 | 84 | 114 | 0.347 | 159 | 0.380 | 174 | . | . | . |
| 17 | 1230 | 61 | . | 67 | 0.207 | 94.9 | 0.226 | 104 | 92.4 | . | . |
| 17 | 1245 | 39 | . | 42 | 0.129 | 59.2 | 0.142 | 65.3 | 60.5 | . | . |
| 17 | 1300 | 38 | . | 41 | 0.135 | 62.0 | 0.151 | 69.2 | 59.0 | . | . |
| 17 | 1315 | 38 | . | 42 | 0.134 | 61.4 | 0.148 | 68.2 | 59.6 | . | . |
| 17 | 1330 | 38 | . | 41 | 0.132 | 60.6 | 0.147 | 67.4 | 58.7 | . | . |
| 17 | 1345 | 41 | . | 44 | 0.143 | 65.5 | 0.159 | 72.8 | 64.2 | . | . |
| 17 | 1400 | 78 | 84 | 84 | 0.272 | 121 | 0.302 | 135 | 120 | . | . |
| 17 | 1415 | 77 | . | 83 | 0.269 | 120 | 0.300 | 134 | 121 | . | . |
| 17 | 1430 | 79 | . | 86 | 0.277 | 124 | 0.309 | 138 | 123 | . | . |
| 17 | 1445 | 80 | . | 87 | 0.281 | 125 | 0.313 | 139 | 124 | . | . |
| 17 | 1500 | 56 | 86 | 59 | 0.257 | 114 | 0.350 | 156 | 86.1 | . | . |
| 17 | 1515 | 67 | . | 72 | 0.263 | 117 | 0.300 | 134 | 104 | . | . |
| 17 | 1530 | 66 | . | 71 | 0.244 | 109 | 0.291 | 126 | 102 | . | . |
| 17 | 1545 | 74 | . | 81 | 0.270 | 121 | 0.307 | 137 | 115 | . | . |
| 17 | 1600 | 81 | 88 | 88 | 0.283 | 126 | 0.316 | 140 | 126 | . | . |
| 17 | 1615 | 80 | . | 87 | 0.282 | 125 | 0.314 | 140 | 126 | . | . |
| 17 | 1630 | 81 | . | 88 | 0.286 | 127 | 0.318 | 141 | 129 | . | . |
| 17 | 1645 | 85 | . | 93 | 0.300 | 133 | 0.336 | 149 | 136 | . | . |
| 17 | 1700 | 90 | 84 | 98 | 0.316 | 141 | 0.352 | 157 | 143 | . | . |
| 17 | 1715 | 92 | . | 100 | 0.322 | 144 | 0.361 | 161 | 146 | . | . |
| 17 | 1915 | 33 | . | 36 | 0.116 | 54.3 | 0.129 | 60.4 | 53.5 | . | 11 |
| 17 | 1930 | 32 | . | 35 | 0.112 | 52.2 | 0.124 | 56.0 | 51.4 | . | 11 |
| 17 | 1945 | 32 | . | 35 | 0.112 | 52.4 | 0.125 | 58.3 | 51.7 | . | 11 |
| 17 | 2000 | 32 | . | 35 | 0.112 | 49.6 | 0.125 | 55.1 | 52.1 | . | 11 |
| 17 | 2015 | 32 | . | 35 | 0.113 | 49.9 | 0.125 | 55.4 | 52.4 | . | . |
| 17 | 2030 | 32 | . | 36 | 0.115 | 50.8 | 0.128 | 56.5 | 53.3 | . | . |
| 17 | 2045 | 31 | . | 34 | 0.114 | 50.2 | 0.127 | 56.3 | 51.4 | . | . |
| 17 | 2100 | 31 | . | 34 | 0.112 | 50.0 | 0.125 | 56.0 | 50.4 | . | . |
| 17 | 2115 | 22 | . | 24 | 0.081 | 36.4 | 0.091 | 40.7 | 36.8 | . | 11 |
| 17 | 2130 | 25 | . | 27 | 0.090 | 40.3 | 0.101 | 45.0 | 40.2 | . | 11 |
| 17 | 2145 | 22 | . | 24 | 0.082 | 36.5 | 0.091 | 40.3 | 35.9 | . | 11 |
| 17 | 2200 | 22 | . | 24 | 0.080 | 33.5 | 0.089 | 37.3 | 35.2 | . | 11 |
| 17 | 2215 | 27 | . | 29 | 0.098 | 41.1 | 0.109 | 45.6 | 42.7 | . | . |
| 17 | 2230 | 29 | . | 32 | 0.107 | 44.8 | 0.118 | 49.8 | 47.2 | . | . |
| 17 | 2245 | 30 | . | 32 | 0.108 | 45.5 | 0.120 | 50.4 | 48.0 | . | . |
| 17 | 2300 | 22 | . | 23 | 0.085 | 23.7 | 0.098 | 27.4 | 31.7 | . | . |
| 17 | 2315 | 9 | . | 9 | 0.039 | 11.0 | 0.048 | 13.4 | 11.6 | . | 10 |

. REPRESENTS MISSING DATA

GCA/TECHNOLOGY DIVISION

CROWN ZELLERBACH
DUCT BURNER OUTLET NOX DATA SUMMARY

| DAY | TIME | NOX PPM WET | CZ NOX PPM WET | NOX PPM DRY | NOX EMISSIONS FD METHOD LB/MBTU | NOX EMISSIONS FD METHOD LB/HR | NOX EMISSIONS FC METHOD LB/MBTU | NOX EMISSIONS FC METHOD LB/HR | NOX EMISSIONS GS METHOD TRANS LB/HR | NOX EMISSIONS GS METHOD TRAV LB/HR | TEST COND |
|---|---|---|---|---|---|---|---|---|---|---|---|
| 17 | 2330 | 9 | . | 9 | 0.038 | 10.7 | 0.047 | 13.1 | 11.5 | . | 10 |
| 17 | 2345 | 8 | . | 9 | 0.037 | 10.3 | 0.044 | 12.4 | 11.1 | . | 10 |
| 18 | 0 | 13 | . | 14 | 0.051 | 14.2 | 0.058 | 16.2 | 17.9 | . | 10 |
| 18 | 15 | 8 | . | 8 | 0.032 | 9.0 | 0.038 | 10.7 | 10.1 | . | . |
| 18 | 30 | 8 | . | 8 | 0.031 | 8.8 | 0.037 | 10.3 | 10.2 | . | . |
| 18 | 45 | 17 | . | 18 | 0.072 | 20.1 | 0.086 | 24.1 | 21.8 | . | . |
| 18 | 100 | 22 | . | 24 | 0.095 | 33.5 | 0.115 | 40.3 | 29.0 | . | . |
| 18 | 115 | 14 | . | 15 | 0.057 | 20.2 | 0.065 | 23.2 | 18.7 | . | . |
| 18 | 130 | 11 | . | 12 | 0.042 | 14.8 | 0.047 | 16.5 | 14.8 | . | . |
| 18 | 145 | 13 | . | 14 | 0.049 | 17.5 | 0.054 | 19.3 | 17.4 | . | . |
| 18 | 200 | 36 | . | 40 | 0.116 | 47.8 | 0.124 | 51.0 | 48.7 | . | . |
| 18 | 215 | 29 | . | 32 | 0.099 | 40.9 | 0.107 | 44.2 | 39.5 | . | . |
| 18 | 230 | 23 | . | 25 | 0.078 | 31.9 | 0.083 | 34.2 | 31.3 | . | . |
| 18 | 245 | 21 | . | 23 | 0.068 | 28.1 | 0.072 | 29.5 | 28.8 | . | . |
| 18 | 300 | 26 | . | 28 | 0.086 | 32.0 | 0.092 | 34.3 | 35.2 | . | . |
| 18 | 315 | 24 | . | 26 | 0.081 | 30.2 | 0.087 | 32.4 | 32.9 | . | . |
| 18 | 330 | 18 | . | 20 | 0.063 | 23.4 | 0.068 | 25.2 | 24.4 | . | . |
| 18 | 345 | 16 | . | 18 | 0.057 | 21.4 | 0.062 | 23.2 | 22.0 | . | . |
| 18 | 400 | 10 | . | 11 | 0.037 | 13.2 | 0.041 | 14.4 | 13.8 | . | . |
| 18 | 415 | 9 | . | 10 | 0.033 | 11.6 | 0.036 | 12.6 | 12.1 | . | 12 |
| 18 | 430 | 24 | . | 27 | 0.087 | 30.6 | 0.094 | 33.3 | 31.6 | . | 12 |
| 18 | 445 | 31 | . | 34 | 0.111 | 39.3 | 0.121 | 42.8 | 39.6 | . | 12 |
| 18 | 500 | 31 | . | 34 | 0.113 | 46.8 | 0.123 | 50.8 | 40.4 | . | 12 |
| 18 | 515 | 31 | . | 34 | 0.112 | 46.4 | 0.121 | 50.2 | 40.7 | . | . |
| 18 | 530 | 31 | . | 34 | 0.099 | 41.2 | 0.104 | 43.3 | 40.5 | . | . |
| 18 | 545 | 30 | . | 33 | 0.098 | 40.7 | 0.104 | 43.1 | 40.0 | . | . |
| 18 | 600 | 30 | . | 33 | 0.095 | 50.9 | 0.100 | 53.3 | 39.6 | . | . |
| 18 | 615 | 30 | . | 33 | 0.095 | 50.9 | 0.100 | 53.5 | 47.1 | . | . |
| 18 | 630 | 28 | . | 31 | 0.087 | 46.5 | 0.092 | 49.0 | 47.0 | . | . |
| 18 | 645 | 27 | . | 30 | 0.086 | 45.8 | 0.091 | 48.4 | 44.7 | . | . |
| 18 | 700 | 28 | . | 31 | 0.090 | 49.3 | 0.095 | 52.4 | 46.1 | . | . |
| 18 | 715 | 28 | . | 31 | 0.091 | 49.7 | 0.096 | 52.7 | 46.4 | . | 3 |
| 18 | 730 | 29 | . | 32 | 0.093 | 51.0 | 0.099 | 54.2 | 47.9 | . | 3 |
| 18 | 745 | 29 | . | 32 | 0.092 | 50.6 | 0.098 | 53.6 | 48.0 | . | 3 |
| 18 | 800 | 29 | . | 32 | 0.091 | 49.4 | 0.096 | 52.2 | 48.1 | . | 3 |
| 18 | 815 | 26 | . | 29 | 0.083 | 45.5 | 0.086 | 47.9 | 43.9 | . | 2 |
| 18 | 1145 | 41 | 36 | 46 | 0.123 | 69.8 | 0.132 | 75.1 | 66.2 | 85.7 | 2 |
| 18 | 1200 | 41 | 37 | 46 | 0.122 | 68.5 | 0.132 | 74.4 | 67.1 | 85.4 | 2 |
| 18 | 1215 | 37 | 38 | 42 | 0.109 | 61.7 | 0.119 | 66.9 | 60.4 | 77.0 | 2 |
| 18 | 1230 | 37 | 41 | 42 | 0.110 | 62.1 | 0.120 | 67.5 | 60.7 | 77.7 | 2 |
| 18 | 1245 | 39 | 39 | 44 | 0.114 | 64.4 | 0.124 | 69.9 | 63.8 | 80.4 | 2 |
| 18 | 1300 | 39 | 40 | 43 | 0.114 | 63.8 | 0.124 | 69.3 | 64.4 | 80.5 | 2 |
| 18 | 1315 | 39 | 39 | 43 | 0.114 | 63.6 | 0.123 | 69.1 | 64.1 | 80.3 | 2 |
| 18 | 1330 | 39 | 38 | 44 | 0.114 | 63.8 | 0.124 | 69.4 | 64.1 | 80.6 | 2 |
| 18 | 1345 | 39 | 41 | 44 | 0.114 | 64.1 | 0.125 | 69.7 | 63.9 | 81.3 | 2 |
| 18 | 1400 | 36 | 40 | 40 | 0.106 | 58.8 | 0.115 | 64.0 | 58.5 | 75.2 | 2 |
| 18 | 1415 | 36 | 36 | 40 | 0.105 | 58.2 | 0.114 | 63.6 | 57.7 | 74.5 | 2 |
| 18 | 1430 | 37 | 39 | 42 | 0.110 | 60.9 | 0.120 | 66.5 | 58.3 | 78.2 | 2 |

. REPRESENTS MISSING DATA

GCA/TECHNOLOGY DIVISION

CROWN ZELLERBACH
DUCT BURNER OUTLET NOX DATA SUMMARY

| DAY | TIME | CZ NOX PPM WET | NOX PPM WET | NOX PPM DRY | NOX EMISSIONS FD METHOD LB/MBTU | LB/HR | NOX EMISSIONS FC METHOD LB/MBTU | LB/HR | NOX EMISSIONS GS METHOD TRANS LB/HR | TRAV LB/HR | TEST COND |
|---|---|---|---|---|---|---|---|---|---|---|---|
| 18 | 1445 | 38 | . | 43 | 0.111 | 61.7 | 0.122 | 67.6 | 59.9 | 79.2 | 2 |
| 18 | 1500 | 39 | 36 | 44 | 0.115 | 63.5 | 0.126 | 69.5 | 63.0 | 81.7 | 2 |
| 18 | 1515 | 39 | 38 | 43 | 0.113 | 62.7 | 0.124 | 68.7 | 59.4 | 80.5 | 2 |
| 18 | 1530 | 38 | 36 | 43 | 0.111 | 61.8 | 0.122 | 67.8 | 48.8 | 79.3 | 2 |
| 18 | 1545 | 38 | 40 | 43 | 0.113 | 62.4 | 0.124 | 68.5 | 43.6 | 80.2 | 2 |
| 18 | 1600 | 39 | 39 | 44 | 0.115 | 63.6 | 0.126 | 69.8 | 43.4 | 81.7 | 2 |
| 18 | 1615 | 39 | 38 | 44 | 0.115 | 63.8 | 0.126 | 69.9 | 46.9 | 81.9 | 2 |
| 18 | 1630 | 39 | 43 | 43 | 0.113 | 62.7 | 0.124 | 68.8 | 61.8 | 80.7 | 2 |
| 18 | 1715 | 51 | 35 | 58 | 0.151 | 84.5 | 0.166 | 93.3 | 82.8 | . | 2 |
| 18 | 1745 | 48 | 35 | 54 | 0.142 | 79.6 | 0.157 | 88.1 | . | . | 2 |
| 18 | 1800 | 49 | 38 | 55 | 0.144 | 79.5 | 0.158 | 87.2 | . | . | 2 |
| 18 | 1815 | 48 | . | 54 | 0.144 | 79.3 | 0.158 | 87.4 | . | . | 2 |
| 18 | 1830 | 46 | . | 52 | 0.138 | 76.3 | 0.152 | 84.1 | . | . | 2 |
| 18 | 1845 | 46 | . | 52 | 0.136 | 75.3 | 0.150 | 82.9 | . | . | 2 |
| 18 | 1900 | 45 | . | 51 | 0.135 | 75.4 | 0.148 | 83.8 | . | . | 2 |
| 18 | 1915 | 46 | . | 51 | 0.134 | 75.8 | 0.147 | 83.1 | . | . | 2 |
| 18 | 1930 | 45 | . | 51 | 0.132 | 74.6 | 0.144 | 81.6 | . | . | 2 |
| 18 | 1945 | 45 | . | 51 | 0.133 | 75.5 | 0.146 | 82.6 | . | . | 2 |
| 18 | 2000 | 45 | . | 50 | 0.132 | 73.7 | 0.144 | 80.6 | . | . | 2 |
| 18 | 2015 | 45 | . | 51 | 0.133 | 74.6 | 0.146 | 81.6 | . | . | 2 |
| 18 | 2030 | 45 | . | 51 | 0.132 | 73.7 | 0.144 | 80.6 | . | . | 2 |
| 18 | 2045 | 39 | . | 43 | 0.113 | 63.4 | 0.124 | 69.3 | . | . | 2 |
| 18 | 2100 | 45 | . | 51 | 0.133 | 74.2 | 0.145 | 81.1 | . | . | 2 |
| 18 | 2115 | 42 | . | 47 | 0.122 | 68.2 | 0.133 | 74.4 | . | . | 2 |
| 18 | 2130 | 44 | . | 50 | 0.129 | 72.1 | 0.141 | 78.8 | . | . | 2 |
| 18 | 2145 | 45 | . | 50 | 0.131 | 73.2 | 0.143 | 80.0 | . | . | 2 |
| 18 | 2200 | 45 | . | 51 | 0.132 | 69.8 | 0.144 | 76.2 | . | . | 2 |
| 18 | 2215 | 45 | . | 51 | 0.132 | 69.8 | 0.144 | 76.1 | . | . | . |
| 18 | 2230 | 45 | . | 51 | 0.133 | 70.3 | 0.145 | 76.5 | . | . | . |
| 18 | 2245 | 45 | . | 51 | 0.132 | 69.9 | 0.144 | 76.0 | . | . | . |
| 18 | 2300 | 35 | . | 43 | 0.120 | 45.5 | 0.134 | 50.6 | . | . | . |
| 18 | 2315 | 27 | . | 30 | 0.088 | 33.3 | 0.099 | 37.4 | . | . | . |
| 18 | 2330 | 26 | . | 28 | 0.085 | 32.0 | 0.095 | 35.9 | . | . | . |
| 18 | 2345 | 25 | . | 28 | 0.082 | 31.1 | 0.092 | 34.9 | . | . | . |
| 19 | 0 | 25 | . | 28 | 0.083 | 31.0 | 0.093 | 34.7 | . | . | . |
| 19 | 15 | 25 | . | 27 | 0.082 | 30.5 | 0.091 | 34.2 | . | . | 12 |
| 19 | 30 | 24 | . | 26 | 0.076 | 29.2 | 0.086 | 32.8 | . | . | 12 |
| 19 | 45 | 24 | . | 26 | 0.076 | 29.3 | 0.086 | 32.8 | . | . | 12 |
| 19 | 100 | 25 | . | 28 | 0.083 | 31.5 | 0.093 | 35.4 | . | . | 12 |
| 19 | 115 | 24 | . | 26 | 0.079 | 30.2 | 0.090 | 34.2 | . | . | 12 |
| 19 | 130 | 25 | . | 28 | 0.082 | 31.3 | 0.093 | 35.2 | . | . | 12 |
| 19 | 145 | 28 | . | 31 | 0.091 | 34.5 | 0.101 | 38.5 | . | . | 12 |
| 19 | 200 | 29 | . | 32 | 0.092 | 34.7 | 0.103 | 38.8 | . | . | 12 |
| 19 | 215 | 27 | . | 30 | 0.088 | 33.2 | 0.099 | 37.1 | . | . | 12 |
| 19 | 230 | 26 | . | 29 | 0.085 | 32.1 | 0.095 | 35.9 | . | . | 12 |
| 19 | 245 | 26 | . | 29 | 0.085 | 32.1 | 0.095 | 35.9 | . | . | 12 |
| 19 | 300 | 27 | . | 29 | 0.086 | 33.3 | 0.096 | 37.4 | . | . | 12 |
| 19 | 315 | 27 | . | 30 | 0.088 | 34.0 | 0.098 | 38.1 | . | . | 12 |

. REPRESENTS MISSING DATA

OCA/TECHNOLOGY DIVISION

CROWN ZELLERBACH
DUCT BURNER OUTLET NOX DATA SUMMARY

| DAY | TIME | NOX PPM WET | CZ NOX PPM WET | NOX PPM DRY | NOX EMISSIONS FD METHOD LB/MBTU | NOX EMISSIONS FD METHOD LB/HR | NOX EMISSIONS FC METHOD LB/MBTU | NOX EMISSIONS FC METHOD LB/HR | NOX EMISSIONS GS METHOD TRANS LB/HR | NOX EMISSIONS GS METHOD TRAV LB/HR | TEST COND |
|---|---|---|---|---|---|---|---|---|---|---|---|
| 19 | 330 | 27 | . | 30 | 0.086 | 33.4 | 0.097 | 37.5 | . | . | 12 |
| 19 | 345 | 25 | . | 28 | 0.082 | 31.7 | 0.092 | 35.6 | . | . | 12 |
| 19 | 400 | 19 | . | 21 | 0.062 | 23.7 | 0.069 | 26.6 | . | . | 12 |
| 19 | 415 | 25 | . | 28 | 0.081 | 30.9 | 0.091 | 34.7 | . | . | 12 |
| 19 | 430 | 25 | . | 28 | 0.081 | 31.2 | 0.092 | 35.2 | . | . | 12 |
| 19 | 445 | 25 | . | 28 | 0.081 | 31.2 | 0.092 | 35.4 | . | . | 12 |
| 19 | 500 | 26 | . | 28 | 0.081 | 34.0 | 0.094 | 39.1 | . | . | 12 |
| 19 | 515 | 26 | . | 28 | 0.081 | 33.6 | 0.094 | 39.1 | . | . | 12 |
| 19 | 530 | 26 | . | 29 | 0.081 | 33.9 | 0.094 | 39.4 | . | . | 12 |
| 19 | 545 | 26 | . | 29 | 0.081 | 33.7 | 0.094 | 39.2 | . | . | 12 |
| 19 | 600 | 26 | . | 29 | 0.082 | 34.2 | 0.095 | 39.7 | . | . | 12 |
| 19 | 615 | 43 | . | 48 | 0.129 | 53.7 | 0.146 | 60.9 | . | . | . |
| 19 | 630 | 43 | . | 49 | 0.125 | 70.2 | 0.141 | 79.1 | . | . | . |
| 19 | 645 | 41 | . | 46 | 0.119 | 66.3 | 0.134 | 74.9 | . | . | . |
| 19 | 700 | 40 | . | 45 | 0.116 | 65.8 | 0.131 | 74.5 | . | . | . |
| 19 | 715 | 40 | . | 45 | 0.116 | 65.9 | 0.131 | 74.7 | . | . | 2 |
| 19 | 730 | 40 | . | 46 | 0.118 | 67.3 | 0.134 | 76.3 | . | . | 2 |
| 19 | 745 | 41 | . | 46 | 0.119 | 68.0 | 0.135 | 77.1 | . | . | 2 |
| 19 | 800 | 41 | . | 47 | 0.120 | 65.4 | 0.136 | 74.0 | . | . | 2 |
| 19 | 815 | 41 | . | 46 | 0.123 | 67.0 | 0.141 | 76.5 | . | . | . |
| 19 | 1015 | 63 | 58 | 69 | 0.202 | 99.9 | 0.219 | 103 | 102 | 118 | 5 |
| 19 | 1030 | 65 | 58 | 71 | 0.210 | 103 | 0.227 | 112 | 102 | 122 | 5 |
| 19 | 1045 | 63 | 58 | 69 | 0.204 | 101 | 0.221 | 109 | 83.1 | 118 | 5 |
| 19 | 1100 | 59 | 61 | 65 | 0.193 | 95.2 | 0.208 | 103 | 87.0 | 112 | 5 |
| 19 | 1115 | 56 | 59 | 64 | 0.188 | 93.2 | 0.204 | 101 | 89.7 | 109 | 5 |
| 19 | 1130 | 57 | 60 | 63 | 0.186 | 92.4 | 0.201 | 100 | 89.5 | 108 | 5 |
| 19 | 1145 | 58 | 62 | 64 | 0.188 | 92.7 | 0.204 | 101 | 91.4 | 110 | 5 |
| 19 | 1200 | 58 | 64 | 64 | 0.189 | 92.8 | 0.205 | 101 | 89.1 | 110 | 5 |
| 19 | 1215 | 59 | 64 | 65 | 0.191 | 93.9 | 0.207 | 102 | 89.5 | 111 | 5 |
| 19 | 1230 | 59 | 64 | 65 | 0.191 | 93.8 | 0.207 | 102 | 89.1 | 111 | 5 |
| 19 | 1245 | 60 | 61 | 66 | 0.195 | 96.2 | 0.212 | 105 | 92.0 | 114 | 5 |
| 19 | 1330 | 60 | 64 | 66 | 0.193 | 94.7 | 0.210 | 103 | 95.9 | 113 | 5 |
| 19 | 1345 | 60 | 61 | 66 | 0.193 | 95.0 | 0.211 | 104 | 97.6 | 114 | 5 |
| 19 | 1400 | 61 | 65 | 67 | 0.195 | 97.0 | 0.213 | 106 | 99.4 | 115 | 5 |
| 19 | 1415 | 60 | 64 | 66 | 0.190 | 93.0 | 0.206 | 101 | 98.1 | 113 | 5 |
| 19 | 1445 | 59 | 62 | 64 | 0.190 | 92.6 | 0.208 | 101 | 95.0 | 111 | 5 |
| 19 | 1500 | 59 | 62 | 65 | 0.193 | 93.9 | 0.211 | 103 | 96.4 | 112 | 5 |
| 19 | 1515 | 59 | 62 | 65 | 0.191 | 93.1 | 0.209 | 102 | 95.0 | 111 | 5 |
| 19 | 1530 | 58 | 61 | 64 | 0.189 | 93.3 | 0.207 | 105 | 93.1 | 110 | 5 |
| 19 | 1545 | 58 | 65 | 64 | 0.184 | 92.6 | 0.200 | 101 | 92.3 | 110 | 5 |
| 19 | 1600 | 59 | 65 | 65 | 0.185 | 92.3 | 0.201 | 100 | 95.5 | 111 | 5 |
| 19 | 1615 | 60 | . | 65 | 0.192 | 93.7 | 0.209 | 104 | 97.2 | 113 | 5 |
| 19 | 1630 | 59 | . | 65 | 0.190 | 95.0 | 0.208 | 104 | 96.5 | 112 | 5 |
| 19 | 1815 | 43 | . | 48 | 0.141 | 74.5 | 0.154 | 80.9 | 71.6 | . | . |
| 19 | 1830 | 44 | . | 49 | 0.135 | 71.1 | 0.145 | 76.2 | 71.7 | . | . |
| 19 | 1245 | 44 | . | 49 | 0.134 | 70.8 | 0.144 | 76.0 | 71.4 | . | . |
| 19 | 1900 | 44 | . | 50 | 0.135 | 71.9 | 0.144 | 76.8 | 72.0 | . | . |
| 19 | 1915 | 44 | . | 49 | 0.135 | 71.8 | 0.144 | 76.9 | 71.8 | . | . |

. REPRESENTS MISSING DATA

GCA/TECHNOLOGY DIVISION

CROWN ZELLERBACH
DUCT BURNER OUTLET NOX DATA SUMMARY

| DAY | TIME | CZ NOX PPM WET | CZ NOX PPM WET | CZ NOX PPM DRY | NOX EMISSIONS FD METHOD LB/MBTU | NOX EMISSIONS FD METHOD LB/HR | NOX EMISSIONS FC METHOD LB/MBTU | NOX EMISSIONS FC METHOD LB/HR | NOX EMISSIONS GS METHOD TRANS LB/HR | NOX EMISSIONS GS METHOD TRAV LB/HR | TEST COND |
|---|---|---|---|---|---|---|---|---|---|---|---|
| 19 | 1930 | 44 | . | 49 | 0.134 | 71.3 | 0.143 | 76.4 | 72.6 | . | . |
| 19 | 1945 | 43 | . | 48 | 0.136 | 72.4 | 0.148 | 78.7 | 70.6 | . | . |
| 19 | 2000 | 43 | . | 49 | 0.133 | 60.5 | 0.141 | 65.8 | 70.4 | . | . |
| 19 | 2015 | 42 | . | 47 | 0.126 | 77.6 | 0.137 | 83.0 | 68.1 | . | 2 |
| 19 | 2030 | 41 | . | 46 | 0.126 | 76.2 | 0.134 | 81.4 | 66.5 | . | 2 |
| 19 | 2045 | 41 | . | 47 | 0.126 | 76.6 | 0.135 | 82.0 | 66.7 | . | 2 |
| 19 | 2100 | 41 | . | 46 | 0.125 | 64.5 | 0.133 | 68.7 | 66.5 | . | 2 |
| 19 | 2115 | 41 | . | 46 | 0.126 | 64.7 | 0.134 | 69.1 | 66.2 | . | 2 |
| 19 | 2130 | 42 | . | 47 | 0.128 | 66.0 | 0.136 | 70.2 | 67.2 | . | 2 |
| 19 | 2145 | 42 | . | 47 | 0.129 | 66.3 | 0.137 | 70.4 | 68.0 | . | 2 |
| 19 | 2200 | 42 | . | 47 | 0.129 | 58.4 | 0.136 | 61.9 | 68.0 | . | 2 |
| 19 | 2215 | 43 | . | 48 | 0.130 | 58.9 | 0.138 | 62.4 | 68.8 | . | . |
| 19 | 2230 | 44 | . | 49 | 0.133 | 60.4 | 0.141 | 64.0 | 70.3 | . | . |
| 19 | 2245 | 44 | . | 49 | 0.135 | 61.4 | 0.144 | 65.3 | 67.2 | . | . |
| 19 | 2300 | 23 | . | 25 | 0.079 | 26.9 | 0.088 | 29.9 | 34.6 | . | . |
| 19 | 2315 | 20 | . | 22 | 0.071 | 24.2 | 0.079 | 26.7 | 27.0 | . | 12 |
| 19 | 2330 | 19 | . | 21 | 0.068 | 23.0 | 0.075 | 25.4 | 25.0 | . | 12 |
| 19 | 2345 | 19 | . | 21 | 0.066 | 22.5 | 0.073 | 24.9 | 24.8 | . | 12 |
| 20 | 0 | 19 | . | 21 | 0.066 | 22.3 | 0.072 | 24.5 | 23.9 | . | 12 |
| 20 | 15 | 19 | . | 20 | 0.065 | 23.1 | 0.071 | 25.4 | 23.9 | . | 12 |
| 20 | 30 | 19 | . | 21 | 0.066 | 23.4 | 0.072 | 25.8 | 24.0 | . | 12 |
| 20 | 45 | 19 | . | 20 | 0.065 | 23.2 | 0.072 | 25.6 | 23.5 | . | 12 |
| 20 | 100 | 18 | . | 20 | 0.064 | 22.2 | 0.070 | 24.5 | 23.1 | . | 12 |
| 20 | 115 | 18 | . | 20 | 0.063 | 21.9 | 0.069 | 24.1 | 22.7 | . | 12 |
| 20 | 130 | 18 | . | 19 | 0.061 | 21.4 | 0.068 | 23.6 | 21.8 | . | 12 |
| 20 | 145 | 18 | . | 19 | 0.062 | 21.4 | 0.068 | 23.7 | 22.2 | . | 12 |
| 20 | 200 | 16 | . | 18 | 0.057 | 19.9 | 0.063 | 22.0 | 20.7 | . | 12 |
| 20 | 215 | 16 | . | 17 | 0.057 | 19.2 | 0.063 | 21.3 | 20.7 | . | 13 |
| 20 | 230 | 14 | . | 16 | 0.051 | 17.3 | 0.057 | 19.4 | 18.5 | . | 13 |
| 20 | 245 | 14 | . | 15 | 0.050 | 16.9 | 0.055 | 18.7 | 18.1 | . | 13 |
| 20 | 300 | 33 | . | 36 | 0.118 | 43.1 | 0.130 | 47.6 | 42.6 | . | 13 |
| 20 | 315 | 50 | . | 55 | 0.179 | 65.8 | 0.196 | 72.7 | 55.9 | . | 12 |
| 20 | 330 | 41 | . | 44 | 0.142 | 52.2 | 0.156 | 57.3 | 52.8 | . | 12 |
| 20 | 345 | 46 | . | 51 | 0.161 | 59.0 | 0.176 | 64.6 | 59.9 | . | 12 |
| 20 | 400 | 47 | . | 51 | 0.162 | 54.8 | 0.177 | 59.9 | 61.1 | . | 12 |
| 20 | 415 | 23 | . | 25 | 0.081 | 27.3 | 0.089 | 30.0 | 30.4 | . | 12 |
| 20 | 430 | 17 | . | 18 | 0.059 | 19.8 | 0.065 | 21.8 | 22.1 | . | 12 |
| 20 | 445 | 17 | . | 19 | 0.059 | 20.0 | 0.065 | 22.0 | 22.0 | . | 12 |
| 20 | 500 | 17 | . | 18 | 0.059 | 20.6 | 0.065 | 22.7 | 21.6 | . | 12 |
| 20 | 515 | 15 | . | 17 | 0.055 | 19.3 | 0.061 | 21.4 | 19.7 | . | 12 |
| 20 | 530 | 16 | . | 18 | 0.057 | 20.0 | 0.062 | 21.9 | 21.1 | . | 12 |
| 20 | 545 | 16 | . | 18 | 0.057 | 19.8 | 0.062 | 21.7 | 21.3 | . | 12 |
| 20 | 600 | 17 | . | 19 | 0.060 | 30.8 | 0.066 | 33.7 | 22.7 | . | 12 |
| 20 | 615 | 36 | . | 40 | 0.120 | 61.4 | 0.128 | 65.5 | 54.2 | . | . |
| 20 | 630 | 42 | . | 47 | 0.132 | 67.5 | 0.139 | 71.4 | 68.1 | . | . |
| 20 | 645 | 41 | . | 46 | 0.132 | 67.8 | 0.141 | 72.3 | 66.3 | . | . |
| 20 | 700 | 41 | . | 46 | 0.127 | 69.2 | 0.134 | 73.1 | 65.7 | . | . |
| 20 | 715 | 40 | . | 44 | 0.123 | 67.3 | 0.130 | 71.1 | 64.5 | . | 2 |

. REPRESENTS MISSING DATA

GCA/TECHNOLOGY DIVISION

CROWN ZELLERBACH
DUCT BURNER OUTLET NOX DATA SUMMARY

| DAY | TIME | CZ NOX PPM WET | CZ NOX PPM WET | CZ NOX PPM DRY | NOX EMISSIONS FD METHOD LB/MBTU | NOX EMISSIONS FD METHOD LB/HR | NOX EMISSIONS FC METHOD LB/MBTU | NOX EMISSIONS FC METHOD LB/HR | NOX EMISSIONS OS METHOD TRANS LB/HR | NOX EMISSIONS OS METHOD TRAV LB/HR | TEST COND |
|---|---|---|---|---|---|---|---|---|---|---|---|
| 20 | 730 | 40 | . | 45 | 0.124 | 67.5 | 0.130 | 71.3 | 65.2 | . | 2 |
| 20 | 745 | 39 | . | 44 | 0.122 | 66.8 | 0.129 | 70.5 | 64.1 | . | 2 |
| 20 | 800 | 38 | . | 43 | 0.120 | 65.3 | 0.126 | 68.8 | 63.5 | . | 2 |
| 20 | 815 | 31 | . | 34 | 0.095 | 52.0 | 0.101 | 54.9 | 50.5 | . | 2 |
| 20 | 1000 | 102 | 108 | 110 | 0.330 | 166 | 0.353 | 178 | 162 | . | . |
| 20 | 1015 | 99 | . | 108 | 0.322 | 162 | 0.345 | 174 | 158 | 184 | 7 |
| 20 | 1030 | 98 | 110 | 106 | 0.318 | 160 | 0.340 | 171 | 156 | 182 | 7 |
| 20 | 1045 | 95 | 107 | 103 | 0.310 | 156 | 0.331 | 167 | 151 | 177 | 7 |
| 20 | 1100 | 98 | 108 | 106 | 0.317 | 160 | 0.339 | 171 | 155 | 181 | 7 |
| 20 | 1115 | 96 | 110 | 104 | 0.312 | 155 | 0.334 | 166 | 151 | 179 | 7 |
| 20 | 1130 | 97 | 109 | 105 | 0.315 | 157 | 0.338 | 168 | 153 | 180 | 7 |
| 20 | 1145 | 98 | 109 | 106 | 0.316 | 157 | 0.339 | 168 | 154 | 181 | 7 |
| 20 | 1200 | 97 | 111 | 105 | 0.315 | 157 | 0.338 | 168 | 153 | 181 | 7 |
| 20 | 1215 | 96 | 109 | 104 | 0.312 | 155 | 0.335 | 166 | 153 | 179 | 7 |
| 20 | 1230 | 97 | 110 | 105 | 0.313 | 155 | 0.336 | 167 | 154 | 179 | 7 |
| 20 | 1245 | 97 | 108 | 105 | 0.312 | 155 | 0.336 | 167 | 152 | 179 | 7 |
| 20 | 1300 | 97 | 111 | 105 | 0.314 | 155 | 0.338 | 166 | 152 | 180 | 7 |
| 20 | 1315 | 96 | 113 | 104 | 0.310 | 152 | 0.333 | 164 | 149 | 178 | 7 |
| 20 | 1330 | 96 | 109 | 104 | 0.311 | 153 | 0.335 | 165 | 151 | 179 | 7 |
| 20 | 1345 | 97 | 112 | 105 | 0.313 | 154 | 0.338 | 166 | 151 | 180 | 7 |
| 20 | 1400 | 98 | 109 | 106 | 0.316 | 155 | 0.340 | 166 | 152 | 181 | 7 |
| 20 | 1415 | 96 | 109 | 104 | 0.311 | 152 | 0.334 | 164 | 150 | 178 | 7 |
| 20 | 1430 | 96 | 109 | 104 | 0.309 | 151 | 0.333 | 163 | 150 | 178 | 7 |
| 20 | 1445 | 97 | 111 | 105 | 0.312 | 153 | 0.336 | 165 | 152 | 180 | 7 |
| 20 | 1500 | 97 | 109 | 105 | 0.313 | 153 | 0.338 | 164 | 177 | 180 | 7 |
| 20 | 1515 | 95 | 113 | 103 | 0.307 | 149 | 0.331 | 161 | 176 | 177 | 7 |
| 20 | 1530 | 96 | 112 | 104 | 0.310 | 151 | 0.335 | 163 | 169 | 178 | 7 |
| 20 | 1545 | 94 | 108 | 102 | 0.305 | 148 | 0.329 | 160 | 159 | 175 | 7 |
| 20 | 1600 | 97 | 110 | 105 | 0.311 | 151 | 0.336 | 164 | 159 | 180 | 7 |
| 20 | 1615 | 82 | 110 | 88 | 0.267 | 134 | 0.292 | 146 | 155 | 152 | 7 |
| 20 | 1630 | 103 | 109 | 112 | 0.333 | 167 | 0.360 | 180 | 175 | 192 | 7 |
| 20 | 1645 | 104 | 109 | 112 | 0.333 | 167 | 0.360 | 180 | 174 | 193 | 7 |
| 20 | 1700 | 100 | 109 | 108 | 0.323 | 165 | 0.349 | 178 | 166 | 186 | 7 |
| 20 | 1715 | 52 | . | 57 | 0.160 | 81.5 | 0.170 | 86.8 | 89.4 | . | . |
| 20 | 1730 | 35 | . | 38 | 0.104 | 53.3 | 0.111 | 56.7 | 59.0 | . | . |
| 20 | 1745 | 33 | . | 36 | 0.101 | 51.7 | 0.109 | 55.2 | 57.1 | . | . |
| 20 | 1800 | 32 | . | 36 | 0.105 | 54.3 | 0.113 | 58.8 | 55.3 | . | . |
| 20 | 1815 | 32 | . | 36 | 0.105 | 54.5 | 0.114 | 58.9 | 54.2 | . | . |
| 20 | 1830 | 32 | . | 36 | 0.106 | 55.0 | 0.116 | 60.0 | 53.8 | . | . |
| 20 | 1845 | 32 | . | 36 | 0.100 | 51.7 | 0.106 | 54.8 | 53.9 | . | . |
| 20 | 1900 | 32 | . | 36 | 0.095 | 49.4 | 0.102 | 52.8 | 53.9 | . | . |
| 20 | 1915 | 32 | . | 36 | 0.097 | 53.5 | 0.102 | 56.5 | 53.6 | . | . |
| 20 | 1930 | 32 | . | 36 | 0.093 | 51.3 | 0.099 | 54.2 | 53.0 | . | . |
| 20 | 1945 | 32 | . | 36 | 0.100 | 55.4 | 0.107 | 59.3 | 53.0 | . | . |
| 20 | 2000 | 32 | . | 36 | 0.092 | 50.1 | 0.097 | 52.6 | 52.4 | . | . |
| 20 | 2015 | 32 | . | 36 | 0.092 | 50.2 | 0.097 | 52.7 | 52.9 | . | . |
| 20 | 2030 | 32 | . | 36 | 0.095 | 53.1 | 0.104 | 56.8 | 52.7 | . | . |
| 20 | 2045 | 31 | . | 35 | 0.096 | 52.4 | 0.102 | 55.4 | 52.5 | . | . |

. REPRESENTS MISSING DATA

GCA/TECHNOLOGY DIVISION

CROWN ZELLERBACH
DUCT BURNER OUTLET NOX DATA SUMMARY

| DAY | TIME | CZ NOX PPM WET | NOX PPM DRY | NOX EMISSIONS FC METHOD LB/MBTU | NOX EMISSIONS FC METHOD LB/HR | NOX EMISSIONS FC METHOD LB/MBTU | NOX EMISSIONS FC METHOD LB/HR | NOX EMISSIONS QS METHOD TRANS LB/HR | NOX EMISSIONS QS METHOD TRAV LB/HR | TEST COND |
|---|---|---|---|---|---|---|---|---|---|---|
| 20 | 2100 | 32 | 36 | 0.098 | 53.5 | 0.105 | 57.1 | 53.1 | . | . |
| 20 | 2115 | 32 | 36 | 0.096 | 51.4 | 0.104 | 54.6 | 51.8 | . | 3 |
| 20 | 2130 | 32 | 36 | 0.099 | 52.1 | 0.106 | 55.8 | 51.4 | . | 3 |
| 20 | 2145 | 32 | 36 | 0.102 | 53.4 | 0.109 | 57.1 | 52.5 | . | 3 |
| 20 | 2200 | 33 | 37 | 0.104 | 53.4 | 0.110 | 56.9 | 53.7 | . | 3 |
| 20 | 2215 | 33 | 37 | 0.104 | 53.4 | 0.110 | 56.7 | 54.4 | . | . |
| 20 | 2230 | 33 | 37 | 0.105 | 54.1 | 0.112 | 57.6 | 54.6 | . | . |
| 20 | 2245 | 33 | 37 | 0.105 | 53.9 | 0.111 | 57.5 | 53.6 | . | . |
| 20 | 2300 | 32 | 36 | 0.102 | 35.0 | 0.109 | 37.5 | 50.8 | . | . |
| 20 | 2315 | 18 | 20 | 0.063 | 21.5 | 0.069 | 23.6 | 24.6 | . | . |
| 20 | 2330 | 14 | 15 | 0.048 | 16.5 | 0.053 | 18.3 | 18.2 | . | . |
| 20 | 2345 | 17 | 19 | 0.062 | 21.2 | 0.069 | 23.8 | 22.0 | . | . |
| 21 | 0 | 21 | 23 | 0.075 | 24.5 | 0.083 | 27.4 | 25.7 | . | . |
| 21 | 15 | 12 | 13 | 0.044 | 14.3 | 0.049 | 16.1 | 15.0 | . | 13 |
| 21 | 30 | 12 | 13 | 0.043 | 14.1 | 0.049 | 15.9 | 15.4 | . | 13 |
| 21 | 45 | 12 | 13 | 0.043 | 14.3 | 0.049 | 15.9 | 16.1 | . | 13 |
| 21 | 100 | 12 | 13 | 0.043 | 14.5 | 0.048 | 16.3 | 16.7 | . | 13 |
| 21 | 115 | 12 | 13 | 0.043 | 14.5 | 0.048 | 16.3 | 16.6 | . | 13 |
| 21 | 130 | 12 | 13 | 0.042 | 14.5 | 0.047 | 16.2 | 16.5 | . | 13 |
| 21 | 145 | 12 | 13 | 0.043 | 14.6 | 0.048 | 16.2 | 16.1 | . | 13 |
| 21 | 200 | 12 | 13 | 0.042 | 13.9 | 0.047 | 15.6 | 15.8 | . | 13 |
| 21 | 215 | 12 | 13 | 0.043 | 14.2 | 0.048 | 16.0 | 16.1 | . | 13 |
| 21 | 230 | 12 | 14 | 0.044 | 14.6 | 0.049 | 16.3 | 16.6 | . | 13 |
| 21 | 245 | 12 | 13 | 0.043 | 14.4 | 0.049 | 16.1 | 16.5 | . | 13 |
| 21 | 300 | 12 | 13 | 0.043 | 14.5 | 0.049 | 16.3 | 16.3 | . | 13 |
| 21 | 315 | 12 | 13 | 0.043 | 14.3 | 0.048 | 16.0 | 15.8 | . | 13 |
| 21 | 330 | 12 | 13 | 0.042 | 14.2 | 0.047 | 15.9 | 15.7 | . | 13 |
| 21 | 345 | 12 | 13 | 0.041 | 13.8 | 0.046 | 15.5 | 15.1 | . | 13 |
| 21 | 400 | 12 | 13 | 0.042 | 14.2 | 0.047 | 16.0 | 15.5 | . | 13 |
| 21 | 415 | 12 | 13 | 0.042 | 14.2 | 0.048 | 16.1 | 15.7 | . | 13 |
| 21 | 430 | 12 | 13 | 0.042 | 14.3 | 0.049 | 16.4 | 16.1 | . | 13 |
| 21 | 445 | 12 | 13 | 0.041 | 14.0 | 0.048 | 16.3 | 16.1 | . | 13 |
| 21 | 500 | 11 | 12 | 0.039 | 13.0 | 0.045 | 15.2 | 15.0 | . | 13 |
| 21 | 515 | 12 | 13 | 0.040 | 13.4 | 0.047 | 15.6 | 15.6 | . | 13 |
| 21 | 530 | 12 | 14 | 0.043 | 14.3 | 0.049 | 16.6 | 16.6 | . | 13 |
| 21 | 545 | 12 | 13 | 0.041 | 13.8 | 0.048 | 16.0 | 15.9 | . | 13 |
| 21 | 600 | 12 | 13 | 0.041 | 20.0 | 0.048 | 23.3 | 15.7 | . | 13 |
| 21 | 615 | 28 | 31 | 0.094 | 45.6 | 0.105 | 51.4 | 42.4 | . | . |
| 21 | 630 | 35 | 39 | 0.107 | 52.6 | 0.118 | 57.9 | 56.8 | . | . |
| 21 | 645 | 33 | 37 | 0.101 | 49.5 | 0.110 | 54.0 | 54.0 | . | . |
| 21 | 700 | 33 | 37 | 0.101 | 53.2 | 0.110 | 58.0 | 54.3 | . | . |
| 21 | 715 | 33 | 37 | 0.103 | 54.2 | 0.112 | 58.8 | 54.7 | . | 3 |
| 21 | 730 | 33 | 37 | 0.103 | 54.0 | 0.111 | 58.5 | 54.4 | . | 3 |
| 21 | 745 | 33 | 37 | 0.102 | 53.5 | 0.110 | 58.0 | 53.8 | . | 3 |
| 21 | 800 | 33 | 37 | 0.100 | 53.4 | 0.108 | 57.5 | 53.8 | . | 3 |
| 21 | 815 | 32 | 36 | 0.100 | 53.4 | 0.109 | 58.0 | 53.0 | . | 3 |
| 21 | 830 | 33 | 37 | 0.101 | 53.6 | 0.107 | 57.2 | 54.6 | . | 3 |
| 21 | 845 | 32 | 36 | 0.099 | 52.8 | 0.106 | 56.5 | 53.3 | . | 3 |

. REPRESENTS MISSING DATA

GCA/TECHNOLOGY DIVISION

CROWN ZELLERBACH
DUCT BURNER OUTLET NOX DATA SUMMARY

| DAY | TIME | NOX PPM WET | CZ NOX PPM WET | NOX PPM DRY | NOX EMISSIONS FD METHOD LB/MBTU | NOX EMISSIONS FD METHOD LB/HR | NOX EMISSIONS FC METHOD LB/MBTU | NOX EMISSIONS FC METHOD LB/HR | NOX EMISSIONS CS METHOD TRANS LB/HR | NOX EMISSIONS CS METHOD TRAV LB/HR | TEST COND |
|---|---|---|---|---|---|---|---|---|---|---|---|
| 21 | 900 | 34 | . | 37 | 0.103 | 56.2 | 0.110 | 59.7 | 55.4 | . | 3 |
| 21 | 1300 | 40 | . | 44 | 0.118 | 62.7 | 0.127 | 67.2 | 65.9 | . | 2 |
| 21 | 1315 | 36 | . | 40 | 0.109 | 57.4 | 0.116 | 61.6 | 59.2 | . | 2 |
| 21 | 1330 | 35 | . | 39 | 0.105 | 55.4 | 0.113 | 59.5 | 56.2 | . | 2 |
| 21 | 1345 | 35 | . | 39 | 0.104 | 55.1 | 0.112 | 59.3 | 56.2 | . | 2 |
| 21 | 1400 | 35 | . | 39 | 0.105 | 56.6 | 0.114 | 61.3 | 57.1 | . | 2 |
| 21 | 1415 | 34 | . | 39 | 0.103 | 55.3 | 0.112 | 60.0 | 57.3 | . | 2 |
| 21 | 1430 | 34 | . | 38 | 0.103 | 55.0 | 0.111 | 59.3 | 55.3 | . | 2 |
| 21 | 1445 | 35 | . | 39 | 0.104 | 55.8 | 0.113 | 60.7 | 56.0 | . | 2 |
| 21 | 1500 | 36 | . | 40 | 0.106 | 56.2 | 0.116 | 61.3 | 56.9 | . | 2 |
| 21 | 1515 | 35 | . | 40 | 0.105 | 55.7 | 0.115 | 61.0 | 57.2 | . | 2 |
| 21 | 1530 | 37 | . | 41 | 0.109 | 57.7 | 0.119 | 63.1 | 59.7 | . | 2 |
| 21 | 1545 | 36 | . | 41 | 0.107 | 56.8 | 0.118 | 62.4 | 58.3 | . | 2 |
| 21 | 1600 | 37 | . | 42 | 0.111 | 59.0 | 0.122 | 63.9 | 60.3 | . | 2 |
| 21 | 1615 | 37 | . | 42 | 0.112 | 58.5 | 0.123 | 64.8 | 60.0 | . | 2 |
| 21 | 1630 | 36 | . | 40 | 0.106 | 55.7 | 0.118 | 61.8 | 56.5 | . | 2 |
| 21 | 1645 | 35 | . | 40 | 0.105 | 54.9 | 0.116 | 60.7 | 55.6 | . | 2 |
| 21 | 1700 | 37 | . | 42 | 0.110 | 59.2 | 0.123 | 66.1 | 58.3 | . | 2 |
| 21 | 1715 | 36 | . | 41 | 0.107 | 57.6 | 0.118 | 63.4 | 57.2 | . | 2 |
| 21 | 1730 | 34 | . | 39 | 0.102 | 54.8 | 0.113 | 60.5 | 55.0 | . | 2 |
| 21 | 1745 | 33 | . | 38 | 0.104 | 55.6 | 0.114 | 61.1 | 54.7 | . | 2 |
| 21 | 1800 | 35 | . | 39 | 0.104 | 55.7 | 0.115 | 61.6 | 55.3 | . | 2 |
| 21 | 1815 | 35 | . | 39 | 0.104 | 55.7 | 0.115 | 61.6 | 56.1 | . | 2 |
| 21 | 1830 | 33 | . | 37 | 0.098 | 52.5 | 0.108 | 57.6 | 53.7 | . | 2 |
| 21 | 1845 | 34 | . | 38 | 0.100 | 53.6 | 0.110 | 59.0 | 54.9 | . | 2 |
| 21 | 1900 | 34 | . | 39 | 0.102 | 54.7 | 0.113 | 60.4 | 56.1 | . | 2 |
| 21 | 1915 | 33 | . | 37 | 0.097 | 51.9 | 0.106 | 56.8 | 53.0 | . | 2 |
| 21 | 1930 | 32 | . | 37 | 0.098 | 52.1 | 0.106 | 56.5 | 52.5 | . | 2 |
| 21 | 1945 | 34 | . | 38 | 0.100 | 53.5 | 0.109 | 58.3 | 55.0 | . | 2 |
| 21 | 2000 | 33 | . | 38 | 0.101 | 53.6 | 0.110 | 58.8 | 54.0 | . | 2 |
| 21 | 2015 | 32 | . | 36 | 0.098 | 52.1 | 0.104 | 55.6 | 52.6 | . | 2 |
| 21 | 2030 | 32 | . | 36 | 0.095 | 50.8 | 0.101 | 54.1 | 52.0 | . | 2 |
| 21 | 2115 | 35 | . | 40 | 0.108 | 58.4 | 0.115 | 62.1 | 57.2 | . | 2 |
| 21 | 2130 | 36 | . | 40 | 0.108 | 58.5 | 0.114 | 62.1 | 58.1 | . | 2 |
| 21 | 2145 | 35 | . | 40 | 0.106 | 57.3 | 0.112 | 60.7 | 57.7 | . | 2 |
| 21 | 2200 | 34 | . | 38 | 0.102 | 55.3 | 0.109 | 59.2 | 55.7 | . | 2 |
| 21 | 2215 | 33 | . | 37 | 0.101 | 54.7 | 0.107 | 58.1 | 54.4 | . | 2 |
| 21 | 2230 | 33 | . | 37 | 0.099 | 53.7 | 0.105 | 56.9 | 53.5 | . | 2 |
| 21 | 2245 | 32 | . | 37 | 0.098 | 53.3 | 0.104 | 56.5 | 53.3 | . | 2 |
| 21 | 2300 | 32 | . | 36 | 0.097 | 35.4 | 0.103 | 37.6 | 52.4 | . | 2 |
| 21 | 2315 | 27 | . | 30 | 0.092 | 33.6 | 0.101 | 37.0 | 37.3 | . | . |
| 21 | 2330 | 32 | . | 35 | 0.109 | 40.0 | 0.120 | 44.0 | 41.5 | . | . |
| 21 | 2345 | 14 | . | 16 | 0.049 | 18.0 | 0.054 | 19.8 | 18.8 | . | . |
| 22 | 0 | 14 | . | 15 | 0.048 | 16.8 | 0.053 | 18.5 | 18.6 | . | . |
| 22 | 15 | 14 | . | 16 | 0.049 | 17.1 | 0.054 | 18.9 | 19.1 | . | 12 |
| 22 | 30 | 13 | . | 15 | 0.046 | 16.3 | 0.052 | 18.0 | 17.6 | . | 12 |
| 22 | 45 | 13 | . | 15 | 0.047 | 16.3 | 0.051 | 18.0 | 17.6 | . | 12 |
| 22 | 100 | 13 | . | 14 | 0.044 | 15.5 | 0.049 | 17.1 | 16.8 | . | 12 |

GCA/TECHNOLOGY DIVISION

CROWN ZELLERBACH
DUCT BURNER OUTLET NOX DATA SUMMARY

| DAY | TIME | NOX PPM WET | CZ NOX PPM WET | NOX PPM DRY | NOX EMISSIONS FD METHOD LB/MBTU | NOX EMISSIONS FD METHOD LB/HR | NOX EMISSIONS FC METHOD LB/MBTU | NOX EMISSIONS FC METHOD LB/HR | NOX EMISSIONS CS METHOD TRANS LB/HR | NOX EMISSIONS CS METHOD TRAV LB/HR | TEST COND |
|---|---|---|---|---|---|---|---|---|---|---|---|
| 22 | 115 | 14 | . | 15 | 0.047 | 16.4 | 0.052 | 18.1 | 18.1 | . | 12 |
| 22 | 130 | 19 | . | 20 | 0.064 | 22.2 | 0.070 | 24.4 | 24.9 | . | 12 |
| 22 | 145 | 13 | . | 15 | 0.046 | 16.9 | 0.050 | 17.6 | 17.6 | . | 12 |
| 22 | 200 | 12 | . | 13 | 0.043 | 15.4 | 0.047 | 17.1 | 16.1 | . | 12 |
| 22 | 215 | 12 | . | 14 | 0.043 | 15.5 | 0.048 | 17.1 | 16.7 | . | 12 |
| 22 | 230 | 13 | . | 14 | 0.045 | 16.1 | 0.049 | 17.8 | 17.1 | . | 12 |
| 22 | 245 | 13 | . | 14 | 0.044 | 16.0 | 0.049 | 17.6 | 17.1 | . | 12 |
| 22 | 300 | 13 | . | 14 | 0.044 | 15.1 | 0.049 | 16.7 | 17.4 | . | 12 |
| 22 | 315 | 13 | . | 15 | 0.046 | 15.6 | 0.051 | 17.2 | 17.7 | . | 13 |
| 22 | 330 | 12 | . | 13 | 0.042 | 14.5 | 0.047 | 16.0 | 16.1 | . | 13 |
| 22 | 345 | 12 | . | 13 | 0.042 | 14.3 | 0.047 | 15.8 | 15.9 | . | 13 |
| 22 | 400 | 12 | . | 13 | 0.042 | 14.1 | 0.047 | 15.6 | 16.3 | . | 13 |
| 22 | 415 | 12 | . | 13 | 0.042 | 13.9 | 0.046 | 15.4 | 15.9 | . | . |
| 22 | 430 | 12 | . | 13 | 0.042 | 13.9 | 0.046 | 15.3 | 15.9 | . | . |
| 22 | 445 | 11 | . | 13 | 0.040 | 13.5 | 0.045 | 15.0 | 15.3 | . | . |
| 22 | 500 | 10 | . | 11 | 0.041 | 12.5 | 0.047 | 14.5 | 13.7 | . | . |
| 22 | 515 | 12 | . | 13 | 0.047 | 14.5 | 0.054 | 16.7 | 16.0 | . | 14 |
| 22 | 530 | 12 | . | 13 | 0.046 | 14.2 | 0.053 | 16.4 | 15.6 | . | 14 |
| 22 | 545 | 12 | . | 13 | 0.047 | 14.4 | 0.054 | 16.7 | 15.8 | . | 14 |
| 22 | 600 | 12 | . | 13 | 0.047 | 14.3 | 0.055 | 16.5 | 15.7 | . | 14 |
| 22 | 615 | 12 | . | 13 | 0.046 | 14.0 | 0.054 | 16.2 | 15.9 | . | 14 |
| 22 | 630 | 12 | . | 13 | 0.046 | 14.0 | 0.053 | 16.1 | 15.7 | . | 14 |
| 22 | 645 | 12 | . | 13 | 0.045 | 13.6 | 0.052 | 15.7 | 15.5 | . | 14 |
| 22 | 700 | 12 | . | 13 | 0.045 | 13.7 | 0.052 | 15.8 | 15.5 | . | 14 |
| 22 | 715 | 9 | . | 10 | 0.035 | 10.6 | 0.040 | 12.2 | 11.8 | . | . |
| 22 | 730 | 8 | . | 9 | 0.033 | 10.0 | 0.038 | 11.7 | 11.1 | . | . |
| 22 | 745 | 8 | . | 9 | 0.033 | 9.9 | 0.038 | 11.6 | 10.8 | . | . |
| 22 | 800 | 8 | . | 9 | 0.033 | 10.9 | 0.039 | 12.7 | 11.0 | . | . |
| 22 | 815 | 8 | . | 9 | 0.033 | 10.8 | 0.038 | 12.4 | 11.1 | . | . |
| 22 | 945 | 14 | . | 16 | 0.051 | 18.1 | 0.057 | 20.1 | 18.6 | . | 13 |
| 22 | 1000 | 15 | . | 16 | 0.053 | 17.9 | 0.059 | 19.9 | 19.5 | . | 13 |
| 22 | 1015 | 12 | . | 13 | 0.043 | 14.4 | 0.047 | 16.0 | 15.6 | . | 13 |
| 22 | 1030 | 11 | . | 13 | 0.040 | 13.6 | 0.045 | 15.1 | 14.9 | . | 13 |
| 22 | 1045 | 11 | . | 12 | 0.038 | 12.9 | 0.042 | 14.3 | 14.2 | . | 13 |
| 22 | 1100 | 11 | . | 12 | 0.039 | 13.7 | 0.043 | 15.1 | 14.3 | . | 13 |
| 22 | 1115 | 12 | . | 13 | 0.040 | 14.1 | 0.044 | 15.6 | 15.1 | . | 12 |
| 22 | 1130 | 12 | . | 13 | 0.042 | 14.9 | 0.046 | 16.4 | 15.9 | . | 12 |
| 22 | 1145 | 13 | . | 14 | 0.043 | 15.1 | 0.047 | 16.6 | 16.4 | . | 12 |
| 22 | 1200 | 12 | . | 13 | 0.042 | 14.8 | 0.046 | 16.3 | 15.8 | . | 12 |
| 22 | 1215 | 12 | . | 13 | 0.042 | 14.8 | 0.046 | 16.4 | 15.8 | . | 12 |
| 22 | 1230 | 12 | . | 13 | 0.042 | 14.9 | 0.046 | 16.5 | 15.9 | . | 12 |
| 22 | 1245 | 13 | . | 14 | 0.044 | 15.7 | 0.049 | 17.4 | 16.8 | . | 12 |
| 22 | 1300 | 13 | . | 15 | 0.045 | 15.7 | 0.050 | 17.4 | 17.5 | . | 12 |
| 22 | 1315 | 14 | . | 15 | 0.047 | 16.2 | 0.052 | 17.9 | 18.1 | . | 13 |
| 22 | 1330 | 14 | . | 15 | 0.047 | 16.2 | 0.052 | 18.0 | 18.2 | . | 13 |
| 22 | 1345 | 13 | . | 15 | 0.046 | 16.0 | 0.051 | 17.8 | 17.6 | . | 13 |
| 22 | 1400 | 14 | . | 15 | 0.047 | 16.5 | 0.052 | 18.4 | 18.1 | . | 13 |
| 22 | 1415 | 14 | . | 15 | 0.047 | 16.6 | 0.052 | 18.4 | 18.1 | . | 13 |

. REPRESENTS MISSING DATA

GCA/TECHNOLOGY DIVISION

CROWN ZELLERBACH
DUCT BURNER OUTLET NOX DATA SUMMARY

| DAY | TIME | CZ NOX PPM WET | CZ NOX PPM DRY | NOX EMISSIONS FD METHOD LB/MBTU | NOX EMISSIONS FD METHOD LB/HR | NOX EMISSIONS FC METHOD LB/MBTU | NOX EMISSIONS FC METHOD LB/HR | NOX EMISSIONS GS METHOD TRANS LB/HR | NOX EMISSIONS GS METHOD TRAV LB/HR | TEST COND |
|---|---|---|---|---|---|---|---|---|---|---|
| 22 | 1430 | 14 | 15 | 0.048 | 16.8 | 0.053 | 18.6 | 18.1 | . | 13 |
| 22 | 1445 | 14 | 16 | 0.048 | 17.0 | 0.054 | 18.8 | 18.6 | . | 13 |
| 22 | 1500 | 15 | 16 | 0.050 | 17.5 | 0.056 | 19.5 | 19.1 | . | 13 |
| 22 | 1515 | 15 | 16 | 0.050 | 17.5 | 0.055 | 19.3 | 19.3 | . | 13 |
| 22 | 1530 | 15 | 16 | 0.051 | 17.7 | 0.056 | 19.5 | 19.8 | . | 13 |
| 22 | 1545 | 15 | 16 | 0.051 | 17.7 | 0.056 | 19.5 | 19.8 | . | 13 |
| 22 | 1600 | 15 | 16 | 0.051 | 17.7 | 0.056 | 19.6 | 19.6 | . | 13 |
| 22 | 1615 | 14 | 16 | 0.050 | 17.0 | 0.055 | 18.8 | 19.5 | . | 13 |
| 22 | 1630 | 14 | 16 | 0.050 | 17.0 | 0.055 | 18.8 | 19.5 | . | 13 |
| 22 | 1645 | 14 | 16 | 0.049 | 17.0 | 0.055 | 18.8 | 19.6 | . | 13 |
| 22 | 1700 | 13 | 14 | 0.045 | 15.8 | 0.050 | 17.5 | 17.6 | . | 13 |
| 22 | 1715 | 13 | 14 | 0.044 | 15.5 | 0.049 | 17.2 | 17.4 | . | 12 |
| 22 | 1730 | 13 | 14 | 0.045 | 15.8 | 0.050 | 17.4 | 17.8 | . | 12 |
| 22 | 1745 | 13 | 15 | 0.046 | 16.1 | 0.050 | 17.7 | 17.9 | . | 12 |
| 22 | 1800 | 12 | 13 | 0.042 | 14.8 | 0.047 | 16.4 | 16.3 | . | 12 |
| 22 | 1815 | 12 | 13 | 0.041 | 14.3 | 0.046 | 16.0 | 15.6 | . | 12 |
| 22 | 1830 | 12 | 14 | 0.043 | 15.0 | 0.047 | 16.6 | 16.4 | . | 12 |
| 22 | 1845 | 12 | 14 | 0.043 | 15.0 | 0.047 | 16.5 | 16.5 | . | 12 |
| 22 | 1900 | 12 | 13 | 0.042 | 14.3 | 0.046 | 15.9 | 16.0 | . | 12 |
| 22 | 1915 | 13 | 14 | 0.044 | 15.2 | 0.048 | 16.7 | 17.3 | . | 12 |
| 22 | 1930 | 12 | 13 | 0.041 | 14.3 | 0.046 | 15.8 | 15.7 | . | 12 |
| 22 | 1945 | 12 | 13 | 0.041 | 14.3 | 0.046 | 15.8 | 15.7 | . | 12 |
| 22 | 2000 | 12 | 13 | 0.041 | 14.5 | 0.045 | 16.0 | 15.5 | . | 12 |
| 22 | 2015 | 12 | 13 | 0.041 | 14.7 | 0.045 | 16.2 | 15.6 | . | 12 |
| 22 | 2015 | 12 | 13 | 0.041 | 14.7 | 0.045 | 16.2 | 15.6 | . | 12 |
| 22 | 2030 | 12 | 13 | 0.042 | 14.9 | 0.046 | 16.4 | 15.8 | . | 12 |
| 22 | 2045 | 12 | 14 | 0.043 | 15.4 | 0.047 | 16.9 | 16.5 | . | 12 |
| 22 | 2100 | 13 | 14 | 0.044 | 15.5 | 0.048 | 16.6 | 17.0 | . | 12 |
| 22 | 2115 | 13 | 14 | 0.044 | 15.5 | 0.048 | 17.0 | 17.1 | . | 12 |
| 22 | 2130 | 12 | 13 | 0.041 | 14.5 | 0.045 | 16.0 | 15.8 | . | 12 |
| 22 | 2145 | 11 | 12 | 0.039 | 13.8 | 0.043 | 15.3 | 14.8 | . | 12 |
| 22 | 2200 | 12 | 13 | 0.040 | 14.0 | 0.045 | 15.5 | 15.3 | . | 12 |
| 22 | 2215 | 12 | 13 | 0.040 | 14.0 | 0.044 | 15.4 | 15.4 | . | 12 |
| 22 | 2230 | 12 | 13 | 0.041 | 14.2 | 0.045 | 15.5 | 15.7 | . | 12 |
| 22 | 2245 | 12 | 13 | 0.041 | 14.1 | 0.044 | 15.4 | 15.4 | . | 12 |
| 22 | 2300 | 12 | 14 | 0.043 | 15.1 | 0.047 | 16.5 | 16.3 | . | 12 |
| 22 | 2315 | 13 | 14 | 0.043 | 15.2 | 0.047 | 16.6 | 16.6 | . | 12 |
| 22 | 2330 | 12 | 14 | 0.043 | 15.0 | 0.047 | 16.3 | 16.4 | . | 12 |
| 22 | 2345 | 12 | 13 | 0.042 | 14.9 | 0.046 | 16.3 | 16.1 | . | 12 |
| 23 | 0 | 12 | 14 | 0.043 | 15.2 | 0.047 | 16.6 | 16.6 | . | 12 |
| 23 | 15 | 13 | 14 | 0.044 | 15.5 | 0.048 | 16.8 | 16.9 | . | 12 |
| 23 | 30 | 12 | 14 | 0.043 | 15.0 | 0.047 | 16.4 | 16.4 | . | 12 |
| 23 | 45 | 12 | 13 | 0.042 | 14.6 | 0.045 | 15.9 | 16.0 | . | 12 |
| 23 | 100 | 12 | 13 | 0.040 | 14.3 | 0.044 | 15.6 | 15.6 | . | 12 |
| 23 | 115 | 13 | 14 | 0.044 | 15.5 | 0.048 | 16.9 | 17.0 | . | . |
| 23 | 130 | 20 | 22 | 0.069 | 24.4 | 0.075 | 26.5 | 26.2 | . | . |
| 23 | 145 | 36 | 40 | 0.123 | 43.7 | 0.133 | 47.1 | 48.0 | . | . |
| 23 | 200 | 42 | 46 | 0.146 | 49.5 | 0.159 | 53.8 | 55.6 | . | . |

. REPRESENTS MISSING DATA

GCA/TECHNOLOGY DIVISION

CROWN ZELLERBACH
DUCT BURNER OUTLET NOX DATA SUMMARY

| DAY | TIME | NOX PPM WET | CZ NOX PPM WET | NOX PPM DRY | NOX EMISSIONS FD METHOD LB/MBTU | NOX EMISSIONS FD METHOD LB/HR | NOX EMISSIONS FC METHOD LB/MBTU | NOX EMISSIONS FC METHOD LB/HR | NOX EMISSIONS QS METHOD TRANS LB/HR | NOX EMISSIONS QS METHOD TRAV LB/HR | TEST COND |
|---|---|---|---|---|---|---|---|---|---|---|---|
| 23 | 215 | 35 | . | 38 | 0.126 | 42.7 | 0.138 | 47.0 | 46.6 | . | 13 |
| 23 | 230 | 35 | . | 39 | 0.128 | 43.4 | 0.141 | 47.9 | 46.7 | . | 13 |
| 23 | 245 | 36 | . | 39 | 0.128 | 43.3 | 0.140 | 47.5 | 46.8 | . | 13 |
| 23 | 300 | 35 | . | 38 | 0.125 | 42.2 | 0.138 | 46.6 | 46.4 | . | 13 |
| 23 | 315 | 35 | . | 38 | 0.124 | 41.9 | 0.136 | 46.2 | 45.5 | . | 13 |
| 23 | 330 | 34 | . | 37 | 0.122 | 41.4 | 0.135 | 45.8 | 45.9 | . | 13 |
| 23 | 345 | 35 | . | 38 | 0.123 | 41.6 | 0.135 | 45.9 | 46.4 | . | 13 |
| 23 | 400 | 35 | . | 38 | 0.123 | 43.3 | 0.136 | 47.8 | 46.2 | . | 13 |
| 23 | 415 | 35 | . | 37 | 0.122 | 43.0 | 0.135 | 47.5 | 45.7 | . | . |
| 23 | 430 | 34 | . | 37 | 0.123 | 43.3 | 0.137 | 48.2 | 44.9 | . | . |
| 23 | 445 | 36 | . | 39 | 0.125 | 44.0 | 0.138 | 48.5 | 47.1 | . | . |
| 23 | 500 | 28 | . | 31 | 0.097 | 32.8 | 0.106 | 35.8 | 37.2 | . | . |
| 23 | 515 | 13 | . | 14 | 0.046 | 15.4 | 0.050 | 16.8 | 17.6 | . | 13 |
| 23 | 530 | 12 | . | 13 | 0.043 | 14.3 | 0.047 | 15.7 | 16.2 | . | 13 |
| 23 | 545 | 11 | . | 12 | 0.040 | 13.5 | 0.045 | 15.0 | 15.0 | . | 13 |
| 23 | 600 | 11 | . | 12 | 0.040 | 20.9 | 0.044 | 22.5 | 15.1 | . | 13 |
| 23 | 615 | 28 | . | 31 | 0.091 | 47.3 | 0.097 | 50.2 | 44.4 | . | . |
| 23 | 630 | 31 | . | 35 | 0.097 | 50.3 | 0.103 | 53.1 | 50.7 | . | . |
| 23 | 645 | 31 | . | 35 | 0.098 | 50.5 | 0.103 | 53.4 | 50.9 | . | . |
| 23 | 700 | 31 | . | 35 | 0.098 | 55.0 | 0.104 | 58.1 | 51.1 | . | . |
| 23 | 715 | 31 | . | 35 | 0.098 | 55.2 | 0.104 | 58.1 | 51.3 | . | . |
| 23 | 730 | 31 | . | 35 | 0.097 | 54.5 | 0.103 | 57.6 | 50.1 | . | . |
| 23 | 745 | 31 | . | 35 | 0.098 | 54.8 | 0.103 | 57.7 | 49.9 | . | . |
| 23 | 915 | 87 | 102 | 96 | 0.240 | 142 | 0.251 | 148 | 137 | 161 | 6 |
| 23 | 930 | 93 | 105 | 103 | 0.271 | 160 | 0.281 | 166 | 154 | 182 | 6 |
| 23 | 945 | 96 | 105 | 106 | 0.265 | 157 | 0.275 | 163 | 151 | 178 | 6 |
| 23 | 1000 | 97 | 106 | 107 | 0.268 | 157 | 0.278 | 163 | 154 | 180 | 6 |
| 23 | 1015 | 96 | 104 | 106 | 0.267 | 156 | 0.278 | 162 | 153 | 178 | 6 |
| 23 | 1030 | 96 | 108 | 105 | 0.266 | 154 | 0.277 | 160 | 156 | 178 | 6 |
| 23 | 1045 | 96 | 107 | 105 | 0.268 | 156 | 0.279 | 162 | 156 | 178 | 6 |
| 23 | 1100 | 95 | 107 | 105 | 0.266 | 154 | 0.278 | 160 | 157 | 177 | 6 |
| 23 | 1115 | 95 | 106 | 104 | 0.266 | 154 | 0.278 | 161 | 156 | 177 | 6 |
| 23 | 1130 | 98 | 111 | 107 | 0.269 | 155 | 0.280 | 162 | 161 | 182 | 6 |
| 23 | 1145 | 99 | 109 | 109 | 0.273 | 157 | 0.284 | 163 | 160 | 184 | 6 |
| 23 | 1200 | 99 | 108 | 108 | 0.271 | 155 | 0.283 | 161 | 161 | 183 | 6 |
| 23 | 1215 | 100 | 111 | 110 | 0.276 | 157 | 0.287 | 164 | 163 | 186 | 6 |
| 23 | 1230 | 99 | 108 | 108 | 0.272 | 155 | 0.283 | 162 | 160 | 184 | 6 |
| 23 | 1245 | 100 | 106 | 109 | 0.273 | 156 | 0.284 | 162 | 157 | 185 | 6 |
| 23 | 1300 | 100 | 112 | 109 | 0.274 | 155 | 0.285 | 162 | 155 | 185 | 6 |
| 23 | 1315 | 99 | 106 | 109 | 0.272 | 155 | 0.284 | 162 | 155 | 183 | 6 |
| 23 | 1330 | 99 | 106 | 108 | 0.270 | 154 | 0.282 | 161 | 155 | 183 | 6 |
| 23 | 1345 | 100 | 110 | 110 | 0.275 | 157 | 0.287 | 164 | 157 | 186 | 6 |
| 23 | 1400 | 101 | 111 | 110 | 0.276 | 158 | 0.289 | 165 | 158 | 187 | 6 |
| 23 | 1415 | 101 | 108 | 111 | 0.277 | 158 | 0.289 | 165 | 158 | 187 | 6 |
| 23 | 1430 | 102 | 113 | 111 | 0.279 | 159 | 0.291 | 167 | 159 | 189 | 6 |
| 23 | 1445 | 102 | 113 | 111 | 0.279 | 159 | 0.291 | 166 | 158 | 189 | 6 |
| 23 | 1500 | 101 | 111 | 111 | 0.279 | 160 | 0.295 | 169 | 159 | 188 | 6 |
| 23 | 1615 | 37 | . | 42 | 0.102 | 59.4 | 0.107 | 61.9 | 59.3 | 68.9 | 1 |

. REPRESENTS MISSING DATA

SCA/TECHNOLOGY DIVISION

CROWN ZELLERBACH
DUCT BURNER OUTLET NOX DATA SUMMARY

| DAY | TIME | CZ NOX PPM WET | CZ NOX PPM DRY | NOX EMISSIONS FD METHOD LB/MBTU | NOX EMISSIONS FD METHOD LB/HR | NOX EMISSIONS FC METHOD LB/MBTU | NOX EMISSIONS FC METHOD LB/HR | NOX EMISSIONS GS METHOD TRANS LB/HR | NOX EMISSIONS GS METHOD TRAV LB/HR | TEST COND |
|---|---|---|---|---|---|---|---|---|---|---|
| 23 | 1630 | 37 | . | 42 | 0.102 | 59.5 | 0.107 | 61.9 | 59.6 | 69.0 | 1 |
| 23 | 1645 | 37 | 45 | 42 | 0.103 | 59.8 | 0.107 | 62.1 | 59.5 | 69.4 | 1 |
| 23 | 1700 | 37 | 42 | 42 | 0.103 | 59.8 | 0.107 | 62.1 | 59.5 | 69.2 | 1 |
| 23 | 1715 | 37 | 42 | 41 | 0.102 | 59.5 | 0.106 | 61.9 | 58.7 | 68.6 | 1 |
| 23 | 1730 | 36 | 39 | 41 | 0.100 | 58.1 | 0.104 | 60.5 | 57.7 | 67.3 | 1 |
| 23 | 1745 | 35 | 38 | 40 | 0.099 | 57.5 | 0.103 | 59.6 | 57.1 | 66.2 | 1 |
| 23 | 1800 | 35 | 40 | 40 | 0.098 | 58.2 | 0.102 | 60.8 | 56.6 | 65.8 | 1 |
| 23 | 1815 | 34 | 38 | 38 | 0.094 | 55.7 | 0.099 | 58.4 | 54.3 | 62.7 | 1 |
| 23 | 1830 | 32 | 35 | 37 | 0.090 | 53.5 | 0.095 | 56.2 | 51.9 | 60.5 | 1 |
| 23 | 1845 | 33 | 41 | 38 | 0.093 | 55.0 | 0.097 | 57.6 | 52.5 | 62.1 | 1 |
| 23 | 1900 | 34 | 37 | 38 | 0.094 | 56.3 | 0.099 | 58.9 | 53.7 | 63.1 | 1 |
| 23 | 1915 | 34 | 42 | 39 | 0.096 | 57.3 | 0.100 | 59.6 | 54.4 | 64.2 | 1 |
| 23 | 1930 | 35 | 42 | 39 | 0.096 | 57.5 | 0.100 | 59.9 | 54.9 | 64.4 | 1 |
| 23 | 1945 | 34 | 39 | 38 | 0.095 | 56.8 | 0.099 | 59.2 | 54.4 | 63.6 | 1 |
| 23 | 2000 | 35 | 38 | 39 | 0.098 | 58.3 | 0.102 | 60.8 | 55.4 | 65.1 | 1 |
| 23 | 2015 | 34 | 41 | 39 | 0.096 | 57.5 | 0.100 | 59.9 | 54.7 | 64.3 | 1 |
| 23 | 2030 | 34 | 40 | 39 | 0.095 | 57.0 | 0.099 | 59.4 | 54.1 | 63.7 | 1 |
| 23 | 2045 | 34 | 40 | 39 | 0.096 | 57.2 | 0.100 | 59.6 | 54.6 | 64.0 | 1 |
| 23 | 2100 | 34 | 40 | 39 | 0.097 | 58.4 | 0.100 | 60.8 | 54.5 | 64.3 | 1 |
| 23 | 2115 | 35 | 41 | 39 | 0.097 | 58.5 | 0.101 | 60.9 | 54.9 | 64.4 | 1 |
| 23 | 2130 | 34 | 42 | 39 | 0.096 | 58.4 | 0.101 | 61.3 | 54.5 | 64.3 | 1 |
| 23 | 2145 | 35 | 40 | 39 | 0.097 | 58.8 | 0.102 | 61.6 | 55.4 | 65.0 | 1 |
| 23 | 2200 | 35 | 40 | 40 | 0.098 | 51.1 | 0.102 | 53.2 | 55.5 | 65.4 | 1 |
| 23 | 2215 | 36 | . | 41 | 0.107 | 55.5 | 0.113 | 58.7 | 57.2 | . | 2 |
| 23 | 2230 | 34 | . | 38 | 0.104 | 54.0 | 0.109 | 56.7 | 53.3 | . | 2 |
| 23 | 2245 | 34 | . | 38 | 0.108 | 56.0 | 0.114 | 59.3 | 54.2 | . | 2 |
| 23 | 2300 | 34 | . | 38 | 0.107 | 39.7 | 0.113 | 41.8 | 54.4 | . | 2 |
| 23 | 2315 | 21 | . | 23 | 0.076 | 28.4 | 0.085 | 31.7 | 29.2 | . | . |
| 23 | 2330 | 30 | . | 32 | 0.111 | 41.1 | 0.123 | 45.9 | 43.9 | . | . |
| 23 | 2345 | 23 | . | 25 | 0.086 | 32.1 | 0.096 | 35.6 | 34.7 | . | . |
| 24 | 0 | 13 | . | 14 | 0.048 | 16.7 | 0.053 | 18.6 | 19.4 | . | . |
| 24 | 15 | 13 | . | 15 | 0.050 | 17.7 | 0.056 | 19.8 | 20.0 | . | 12 |
| 24 | 30 | 15 | . | 16 | 0.057 | 20.0 | 0.064 | 22.6 | 22.5 | . | 12 |
| 24 | 45 | 15 | . | 16 | 0.057 | 20.0 | 0.065 | 22.9 | 22.5 | . | 12 |
| 24 | 100 | 15 | . | 16 | 0.057 | 20.4 | 0.064 | 23.2 | 22.2 | . | 12 |
| 24 | 115 | 14 | . | 15 | 0.052 | 18.7 | 0.059 | 21.4 | 20.3 | . | 12 |
| 24 | 130 | 14 | . | 15 | 0.052 | 18.9 | 0.059 | 21.3 | 20.5 | . | 12 |
| 24 | 145 | 14 | . | 15 | 0.053 | 19.1 | 0.060 | 21.6 | 20.9 | . | 12 |
| 24 | 200 | 15 | . | 17 | 0.057 | 21.3 | 0.063 | 24.2 | 22.7 | . | 12 |
| 24 | 215 | 16 | . | 18 | 0.060 | 22.9 | 0.066 | 25.4 | 24.3 | . | 12 |
| 24 | 230 | 20 | . | 22 | 0.072 | 27.5 | 0.079 | 30.2 | 30.2 | . | 12 |
| 24 | 245 | 22 | . | 24 | 0.080 | 30.7 | 0.088 | 33.8 | 33.5 | . | 12 |
| 24 | 300 | 20 | . | 22 | 0.073 | 27.6 | 0.081 | 30.6 | 30.2 | . | 12 |
| 24 | 315 | 18 | . | 20 | 0.067 | 25.3 | 0.074 | 28.1 | 27.7 | . | 12 |
| 24 | 330 | 19 | . | 20 | 0.068 | 25.8 | 0.076 | 28.6 | 28.3 | . | 12 |
| 24 | 345 | 18 | . | 20 | 0.067 | 25.4 | 0.075 | 28.4 | 27.7 | . | 12 |
| 24 | 400 | 18 | . | 20 | 0.067 | 24.7 | 0.075 | 27.8 | 27.8 | . | 12 |
| 24 | 415 | 18 | . | 20 | 0.066 | 24.5 | 0.074 | 27.4 | 27.6 | . | 12 |

[illegible] DENOTES MISSING DATA

GCA/TECHNOLOGY DIVISION

CROWN ZELLERBACH
DUCT BURNER OUTLET NOX DATA SUMMARY

| DAY | TIME | CZ NOX PPM WET | NOX PPM WET | NOX PPM DRY | NOX EMISSIONS FD METHOD LB/MBTU | NOX EMISSIONS FD METHOD LB/HR | NOX EMISSIONS FC METHOD LB/MBTU | NOX EMISSIONS FC METHOD LB/HR | NOX EMISSIONS GS METHOD TRANS LB/HR | NOX EMISSIONS GS METHOD TRAV LB/HR | TEST COND |
|---|---|---|---|---|---|---|---|---|---|---|---|
| 24 | 430 | 18 | . | 20 | 0.066 | 24.3 | 0.073 | 27.2 | 26.9 | . | 12 |
| 24 | 445 | 17 | . | 19 | 0.064 | 23.7 | 0.072 | 26.5 | 26.0 | . | 12 |
| 24 | 500 | 17 | . | 18 | 0.062 | 22.6 | 0.069 | 25.4 | 25.3 | . | 12 |
| 24 | 515 | 16 | . | 18 | 0.061 | 26.2 | 0.068 | 29.3 | 24.7 | . | 13 |
| 24 | 530 | 16 | . | 17 | 0.058 | 25.0 | 0.065 | 28.0 | 23.5 | . | 13 |
| 24 | 545 | 16 | . | 18 | 0.059 | 25.6 | 0.066 | 28.5 | 24.1 | . | 13 |
| 24 | 600 | 17 | . | 18 | 0.061 | 26.3 | 0.068 | 29.3 | 25.1 | . | 13 |
| 24 | 615 | 30 | . | 33 | 0.096 | 41.4 | 0.101 | 43.8 | 47.8 | . | . |
| 24 | 630 | 32 | . | 35 | 0.098 | 52.8 | 0.103 | 55.5 | 52.2 | . | . |
| 24 | 645 | 31 | . | 35 | 0.097 | 51.8 | 0.102 | 54.9 | 51.2 | . | . |
| 24 | 700 | 30 | . | 34 | 0.094 | 50.2 | 0.100 | 53.4 | 49.7 | . | . |
| 24 | 715 | 31 | . | 34 | 0.095 | 51.3 | 0.101 | 54.3 | 50.5 | . | 3 |
| 24 | 730 | 29 | . | 32 | 0.091 | 48.8 | 0.094 | 50.7 | 46.8 | . | 3 |
| 24 | 1030 | 59 | 65 | 66 | 0.167 | 98.3 | 0.171 | 101 | 95.5 | 111 | 4 |
| 24 | 1045 | 55 | 62 | 61 | 0.154 | 90.7 | 0.157 | 92.5 | 87.4 | 102 | 4 |
| 24 | 1100 | 54 | 64 | 60 | 0.152 | 87.9 | 0.155 | 89.6 | 86.4 | 100 | 4 |
| 24 | 1115 | 54 | 65 | 60 | 0.152 | 88.9 | 0.155 | 90.7 | 86.0 | 99.9 | 4 |
| 24 | 1130 | 54 | 63 | 60 | 0.150 | 88.1 | 0.153 | 89.8 | 86.2 | 99.8 | 4 |
| 24 | 1145 | 53 | 63 | 59 | 0.150 | 87.6 | 0.153 | 89.5 | 86.2 | 99.5 | 4 |
| 24 | 1200 | 55 | 68 | 61 | 0.153 | 89.6 | 0.156 | 91.5 | 87.2 | 102 | 4 |
| 24 | 1215 | 52 | . | 58 | 0.145 | 85.3 | 0.149 | 87.2 | 82.7 | 97.4 | 4 |
| 24 | 1230 | 52 | 60 | 58 | 0.145 | 84.9 | 0.148 | 86.8 | 82.6 | 97.3 | 4 |
| 24 | 1245 | 53 | 64 | 59 | 0.148 | 87.0 | 0.152 | 89.1 | 84.1 | 99.9 | 4 |
| 24 | 1300 | 52 | 62 | 58 | 0.145 | 82.9 | 0.149 | 85.3 | 79.9 | 97.4 | 4 |
| 24 | 1315 | 52 | 64 | 58 | 0.144 | 81.8 | 0.148 | 84.0 | 80.1 | 97.0 | 4 |
| 24 | 1330 | 52 | 64 | 58 | 0.144 | 81.6 | 0.149 | 84.5 | 80.8 | 97.0 | 4 |
| 24 | 1345 | 52 | 64 | 58 | 0.143 | 80.9 | 0.148 | 83.8 | 80.7 | 96.9 | 4 |
| 24 | 1400 | 53 | 64 | 59 | 0.146 | 83.0 | 0.150 | 85.5 | 81.4 | 98.2 | 4 |
| 24 | 1415 | 52 | 65 | 58 | 0.145 | 82.4 | 0.149 | 84.9 | 80.9 | 97.5 | 4 |
| 24 | 1430 | 53 | . | 58 | 0.146 | 82.9 | 0.150 | 85.2 | 81.4 | 98.0 | 4 |
| 24 | 1445 | 55 | . | 61 | 0.152 | 86.3 | 0.156 | 88.7 | 84.1 | 102 | 4 |
| 24 | 1500 | 52 | . | 58 | 0.145 | 83.5 | 0.149 | 85.8 | 79.9 | 97.1 | 4 |
| 24 | 1515 | 53 | . | 59 | 0.147 | 84.7 | 0.151 | 87.2 | 81.8 | 98.6 | 4 |
| 24 | 1530 | 44 | 64 | 48 | 0.155 | 89.4 | 0.162 | 93.2 | 67.6 | 81.9 | 4 |
| 24 | 1545 | 59 | 65 | 65 | 0.167 | 96.5 | 0.171 | 98.6 | 90.7 | 110 | 4 |
| 24 | 1600 | 57 | 62 | 64 | 0.163 | 93.2 | 0.167 | 95.2 | 89.0 | 107 | 4 |
| 24 | 1615 | 57 | 65 | 64 | 0.163 | 92.8 | 0.166 | 94.4 | 88.2 | 107 | 4 |
| 24 | 1630 | 57 | . | 63 | 0.160 | 91.1 | 0.171 | 97.3 | 87.0 | 106 | 4 |

. REPRESENTS MISSING DATA