United States
Environmental Protection
Agency

Office of Air Quality
Planning and Standards
Research Triangle Park NC 27711

EMB Report 85-IBR-26
May 1985

Air

EPA

Industrial Boilers Emission Test Report

General Electric New York State

GCA-TR-84-183-G
EMB Report 85-1BR-26

Prepared for

U.S. ENVIRONMENTAL PROTECTION AGENCY
Office of Air Quality Planning and Standards
Emissions Measurement Branch
Research Triangle Park, NC

Contract No. 68-02-3851
Work Assignment No. 9

George Walsh - Project Officer
Dennis Holzschuh - Task Manager

EMISSION TEST REPORT
GENERAL ELECTRIC COMPANY
NEW YORK STATE

Final Report

May 1985

Prepared by

Edward F. Peduto, Jr.
David M. Moll

GCA CORPORATION
GCA/TECHNOLOGY DIVISION
Bedford, Massachusetts 01730

DISCLAIMER

This Final Report was furnished to the Environmental Protection Agency by the GCA Corporation, GCA/Technology Division, Bedford, Massachusetts 01730, in fulfillment of Contract No. 68-02-3851, Work Assignment No. 9. The opinions, findings, and conclusions expressed are those of the authors and not necessarily those of the Environmental Protection Agency or the cooperating agencies. Mention of company or product names is not to be considered as an endorsement by the Environmental Protection Agency.

CONTENTS

Figures iv
Tables v

1. Introduction. 1
2. Summary of Results. 2
   Emission Measurements. 2
   Relative Accuracy Test 8
3. Process Description, Operation and Sampling Location . . . 10
   Process Description. 10
   Operating Conditions 10
   Measurement Location 11
4. Sampling and Analytical Test Approach 14
   Overview 14
   Measurement of Flue Gas Emission Rates 14
   Measurement System Quality Assurance 18
   Analytical Procedures. 25
   Data Reduction, Validation and Reporting 25
5. Program Quality Assurance 28
   Measurement System Performance 28
   Completeness 33
   Deviations From the Quality Assurance Test Plan. . . . 33

Appendices

A. 15-Minute Averaged Data for Test Conditions 1, 2 and 3. . . 35
B. Calibration Data and Data Reduction Calibration Equations . 41
C. Reference Test Method Field Data Sheets 55
D. Method 7 Analytical Data. 81
E. Reference Method Data Reduction 87
F. Relative Accuracy Calculations. 101
G. Emission Test Participants 109

FIGURES

Number		Page
1	Trend plot of NO_x emissions and O_2 data for test condition 1	6
2	Trend plot of NO_x emission rate and excess O_2 for test condition 2	7
3	Trend plot of NO_x emissions and excess O_2 data for test condition 3	8
4	Schematic of low NO_x gas-fired boiler emission measurement location	12
5	Stack sample point location	13
6	Data acquisition system schematic	17
7	Mobile laboratory flow schematic	19
8	Valve box configuration	20
9	Condensation/pumping system	21
10	Sample distribution system	22

TABLES

Number		Page
1	Hourly Emissions Data for Test Condition 1--General Electric Power Boiler, New York State	3
2	Hourly Emissions Data for Test Condition 2--General Electric Power Boiler, New York State	4
3	Hourly Emissions Data for Test Condition 3--General Electric Power Boiler, New York State	5
4	Relative Accuracy Test Results.	9
5	Low NO_x Boiler Test Program Measurement Parameter Summary	15
6	Sampling Parameters and CEMs Methodology.	16
7	Calibration Gas Concentrations.	23
8	Stratification Test Results	29
9	Relative Accuracy Test Results.	30
10	Calibration Error Test Results.	31
11	Calibration Drift Test Conditions	32

SECTION 1

INTRODUCTION

The U.S. Environmental Protection Agency (U.S. EPA) proposed standards for Industrial Boilers greater than 250 MMBtu/hr heat input on June 19, 1984. Additional data gathering for NO_x emissions is being conducted prior to promulgation of these standards.

In support of the data gathering process, GCA Corporation was issued a task by the Emissions Measurement Branch (EMB) of OAQPS to conduct a short-term continuous monitoring program. The program was conducted on a proprietary low NO_x gas-fired steam generator owned and operated by General Electric Company (G.E.) in New York State. Primary measurement objectives were to quantify the NO_x emission rates associated with three (3) different process operating conditions.

This report summarizes emissions measurements conducted at G.E., NY during the period of December 3-7, 1984. Section 2 presents a summary and discussion of program results. A description of the process and sampling location is presented in Section 3 and the sampling and analytical approach is presented in Section 4. Section 5 includes the results of associated quality assurance measures and the supporting documentation, raw field data and the data reduction approach are included as Appendices A through G.

SECTION 2

SUMMARY OF RESULTS

During the period of December 4-6, three boiler test conditions were monitored, ranging in duration from 4 to 8 hours each. These measurements were conducted using continuous monitoring methods for acquiring the primary measurement parameters which included NO_x, O_2, CO_2, and CO. To document the performance of the monitoring system, manual reference test procedures were conducted to assess the relative accuracy of the measurements.

EMISSION MEASUREMENTS

The data for each test condition were acquired on a continuous basis and stored as a 15-minute average. These minimum averaged values were then used to calculate 1 hour and test condition averages.

A summary of the hourly averages for each test condition is shown in Tables 1, 2, and 3. Included in Appendix A are the 15-minute averaged data used to assemble the data tables.

The data for test condition 1 indicate an average NO_x emission rate of 55 ng/J (0.128 lb/10^6 Btu) and a standard deviation of 1.8 ng/J (0.00456 lb/10^6 Btu). Values ranged from 53 (0.124 lb/10^6 Btu) to 58 ng/J (0.136 lb/10^6 Btu). Carbon monoxide concentrations adjusted to stoichiometric conditions (STOICH CO) averaged 874 ppm and ranged from 435 to 1063 ppm. Trend plots of the NO_x emission rate and excess O_2 are shown in Figure 1 to illustrate the variability of the 15-minute averaged data of these two parameters for the test condition.

Data for test condition 2 are shown in Table 2 and the corresponding trend plot of NO_x emission rate and excess O_2 is shown in Figure 2. Oxides of nitrogen emission rates averaged 40 ng/J (0.093 lb/10^6 Btu) and exhibited a standard deviation (on an hourly basis) of 0.8 ng/J (0.00155 lb/10^6 Btu). Values ranged from 39 (0.090 lb/10^6 Btu) to 41 ng/J (0.094 lb/10^6 Btu). Carbon monoxide emissions at stoichiometric conditions averaged 1523 ppm and exhibited essentially no variability.

The results for test condition 3 are shown in Table 3 and the corresponding trend plot is shown in Figure 3. Emission rates for NO_x averaged 65 ng/J (0.151 lb/10^6 Btu) and exhibited essentially no variability on an hourly basis. Carbon monoxide emissions which averaged 45 ppm at stoichiometric conditions were much lower than the two other test conditions.

TABLE 1. HOURLY EMISSIONS DATA FOR TEST CONDITION 1--GENERAL ELECTRIC POWER BOILER, NEW YORK STATE

Day	Hour	NO_x (ppm)	O_2 (%)	CO_2 (%)	CO (ppm)	FO ratio	Stoich CO (ppm)	NO_x (ng/J)	NO_x (lb/MBtu)
339	13	97	4.3	9.8	760[a]	1.693	959.4	57	0.132
339	14	92	5.6	9.1	325[a]	1.677	435.2	58	0.136
339	15	92	4.7	9.7	622[a]	1.671	801.5	55	0.128
339	16	93	4.2	9.9	776[a]	1.695	967.8	54	0.126
339	17	92	4.2	9.9	783[a]	1.689	976.4	54	0.125
339	18	92	4.2	9.9	853[a]	1.700	1063.0	54	0.124
339	19	92	4.1	9.7	812[a]	1.724	1010.1	53	0.124

[a]Parameter exceeds top span concentration.

TABLE 2. HOURLY EMISSIONS DATA FOR TEST CONDITION 2--GENERAL ELECTRIC POWER BOILER, NEW YORK STATE

Day	Hour	NO_x (ppm)	O_2 (%)	CO_2 (%)	CO (ppm)	FO ratio	Stoich CO (ppm)	NO_x (ng/J)	NO_x (lb/MBtu)
340	10	66	4.4	9.2	1209[a]	1.800	1524.7	39	0.090
340	11	67	4.4	9.3	1212[a]	1.785	1527.0	39	0.091
340	12	69	4.3	9.4	1212[a]	1.756	1526.7	40	0.094
340	13	69	4.3	9.5	1211[a]	1.753	1524.6	40	0.094
340	14	69	4.3	9.3	1208[a]	1.781	1522.1	41	0.094
340	15	68	4.3	9.0	1211[a]	1.842	1523.0	40	0.093
340	16	68	4.3	9.2	1212[a]	1.809	1520.5	40	0.093
340	17	70	4.2	9.4	1208[a]	1.764	1515.8	41	0.094

[a]Parameter exceeds top span concentration.

TABLE 3. HOURLY EMISSIONS DATA FOR TEST CONDITION 3--GENERAL ELECTRIC POWER BOILER, NEW YORK STATE

Day	Hour	NO_x (ppm)	O_2 (%)	CO_2 (%)	CO (ppm)	FO ratio	Stoich CO (ppm)	NO_x (ng/J)	NO_x (lb/MBtu)
341	10	99	6.1	8.0	32	1.836	45.3	65	0.151
341	11	98	6.2	7.9	32	1.859	44.7	65	0.150
341	12	99	6.2	8.0	31	1.845	44.2	65	0.151
341	13	99	6.1	7.9	31	1.876	43.8	65	0.152

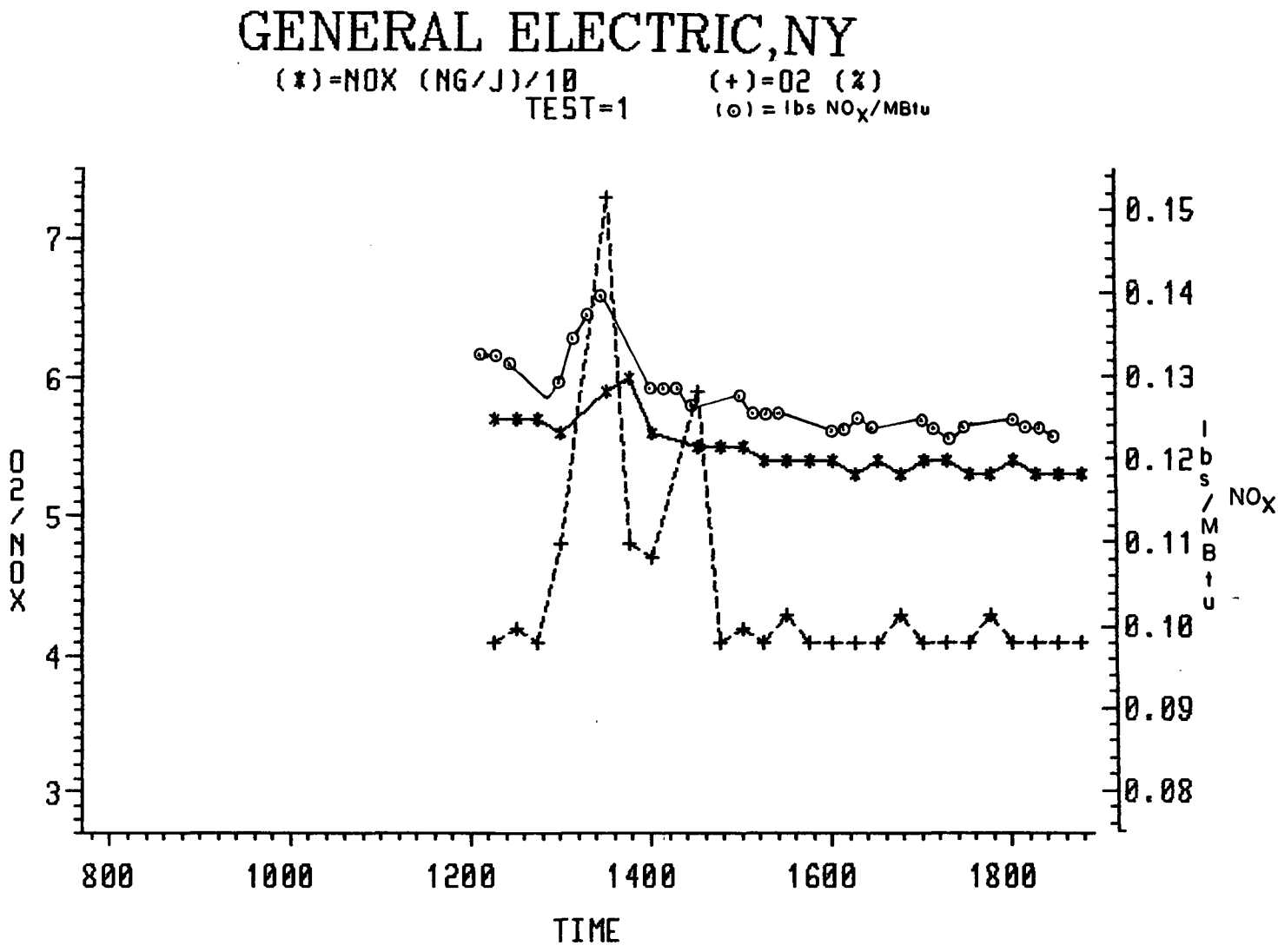

Figure 1. Trend plot of NO_x emissions and O_2 data for test condition 1.

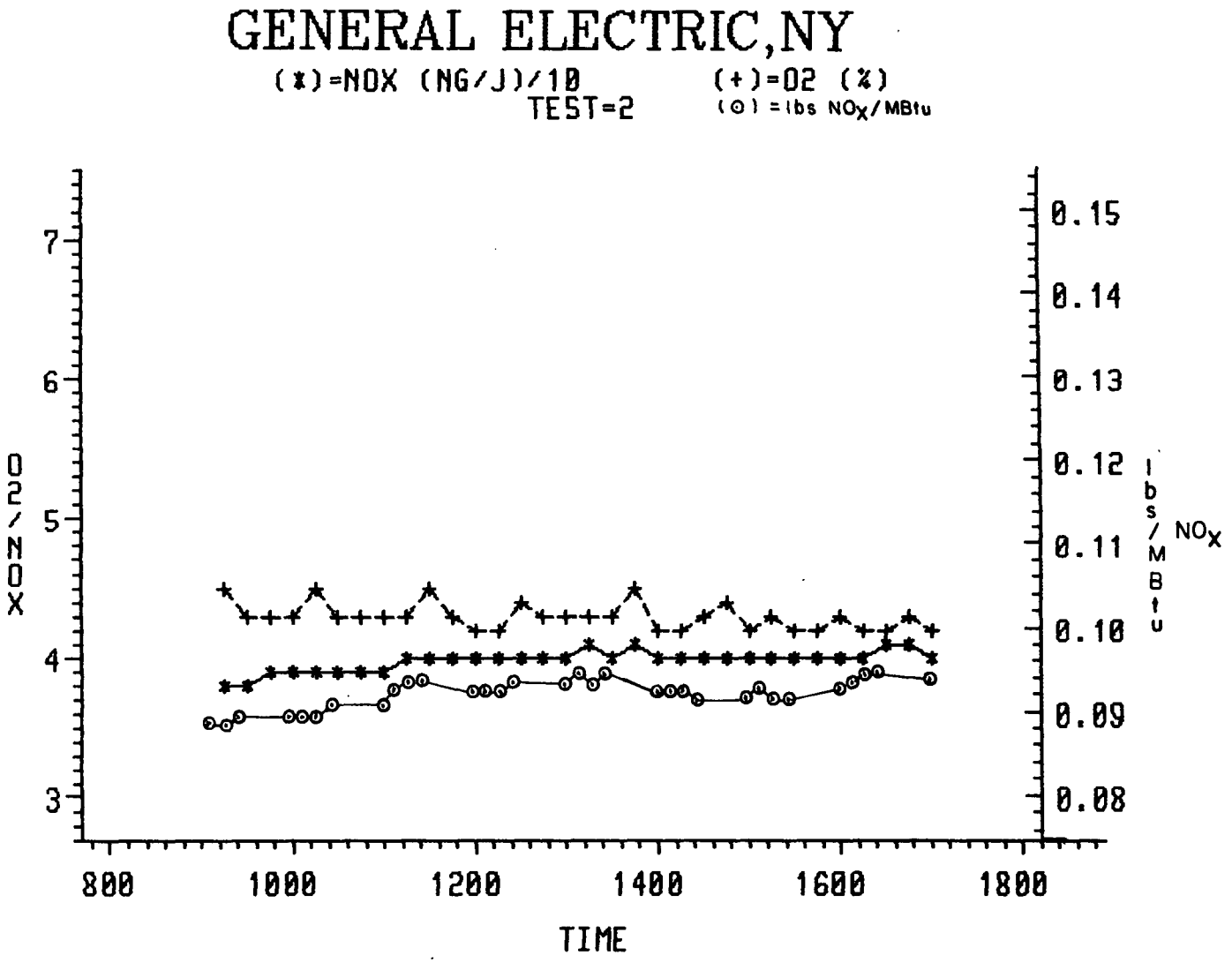

Figure 2. Trend plot of NO_x emission rate and excess O_2 for test condition 2.

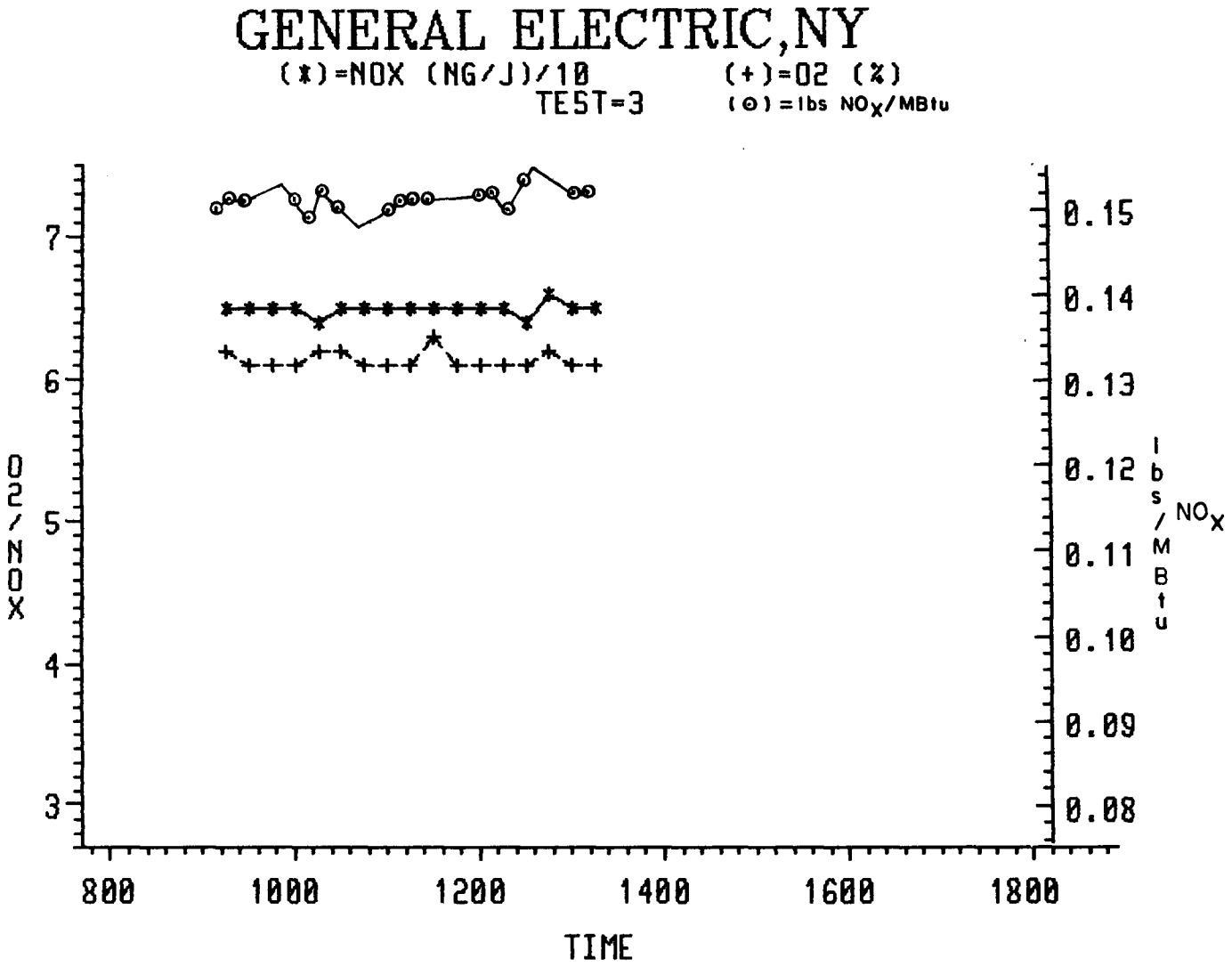

Figure 3. Trend plot of NO_x emissions and excess O_2 data for test condition 3.

RELATIVE ACCURACY TEST

The results of the relative accuracy test are shown in Table 4. The relative accuracy for the NO_x analyzer is 6.0 percent on a volume basis and 11.4 percent on an emission rate basis. Relative accuracies for the O_2 and CO_2 analyzers on an absolute concentration basis are 0.22 percent O_2 and 0.24 percent CO_2, respectively. These results correspond to 5.1 percent and 2.5 percent relative accuracy when compared to mean reference test result.

TABLE 4. RELATIVE ACCURACY TEST RESULTS

Parameter	Mean difference	Confidence coeficient	Relative accuracy
NO_x (ppm)	2.4	1.4	6.0
NO_x (ng/J)	1.6	2.6	11.4
O_2	0.09	0.13	0.22% O_2 (5.1 RA)
CO_2	0.01	0.23	0.24% CO_2 (2.5% RA)

SECTION 3

PROCESS DESCRIPTION, OPERATION AND SAMPLING LOCATION

PROCESS DESCRIPTION

The power boiler at the General Electric facility is a gas-fired steam generator outfitted with a proprietary low NO_x burner system.

Since the unit is a proprietary design, all process information has been requested by the host site to be held by EPA as confidential information. Therefore, this section dealing with the process and its operating conditions during the test has been placed in the confidential files of the Emission Standards and Engineering Division (ESED), OAQPS, U.S. EPA, located in Durham, North Carolina, where it will be maintained as "pending confidential" until such time as a determination is rendered by the Office of General Counsel, EPA.

The following summarizes current ESED policies regarding release of information held in confidential files:

- Information may be released to EPA employees only upon approval by the Director, ESED.
- Requests from other Federal agencies, Congress, courts, etc. are handled by the Office of the Director, ESED.
- Requests from the general public under the Freedom of Information Act are handled in accordance with 40 CFR, Part 2, Subpart A.

Additional information regarding the handling, storage, and access to confidential materials may be obtained by writing the Director, Emission Standards and Engineering Division, U.S. EPA, Mail Drop 13, Research Triangle Park, N.C. 27711.

OPERATING CONDITIONS

The boiler was monitored under three test conditions while firing natural gas. Test conditions were conducted on December 4, 5, and 6 for approximate time periods ranging from 4 to 8 hours. Two of the test conditions were conducted at high load conditions and the third at reduced load conditions. One of the high load conditions was conducted with preheated secondary combustion air while the second was conducted using unheated secondary combustion air.

MEASUREMENT LOCATION

The emissions test program was conducted at the stack location of the gas-fired boiler. Figure 4 show a schematic of the unit stack.

Figure 5 shows the dimensions of the stack cross section. The traverse points noted are the test points used during the stratification test in order to verify the presence of a homogeneous flue gas stream.

The continuous monitoring and reference method test probes extracted sample gas from a single test point. Positioning points for each probe during the test program are shown in Figure 5.

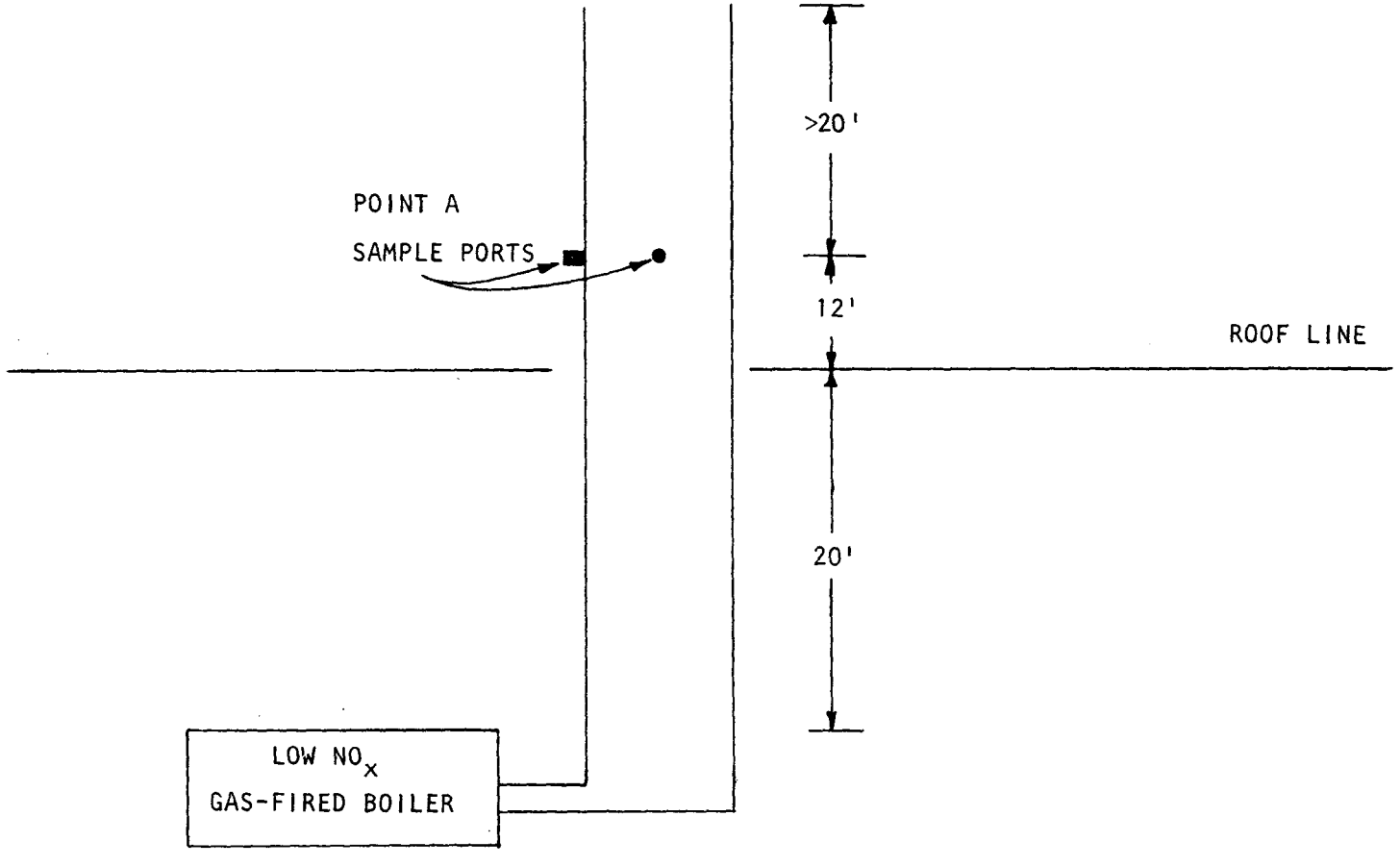

Figure 4. Schematic of low NO_x gas-fired boiler emission measurement location.

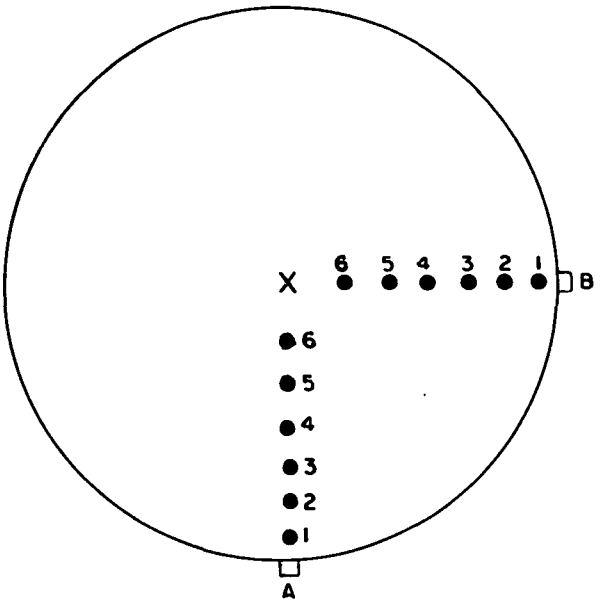

Point	Distance from wall (inches)
1	1.6
2	5.4
3	9.4
4	14.2
5	20.0
6	28.5

X CEM Probe Placement

Figure 5. Stack sample point location.

SECTION 4

SAMPLING AND ANALYTICAL TEST APPROACH

OVERVIEW

The test program to monitor the emissions of the G.E. industrial gas boiler was conducted utilizing both continuous and manual reference method test procedures. During the test effort, the industrial boiler was continuously monitored for NO_x, CO, CO_2 and O_2 emissions. During the three (3)-boiler test conditions previously defined, flue gas emissions were measured with continuous monitoring equipment using EPA Reference Methods 10 and 20 for CO and NO_x as operating guidelines.

Continuous monitoring data were acquired on a of 15-minute basis for measured concentrations of outlet NO_x, O_2, CO, and CO_2. Emission rates were calculated using the F-factor method and published emission factors for natural gas.

Table 5 presents a summary of measured parameters obtained during the test program. Procedures used for measuring continuous flue gas emission rates and measurement system relative accuracy are outlined in the following subsections.

MEASUREMENT OF FLUE GAS EMISSION RATES

Flue gas emission rates were measured at the outlet of the boiler with the EPA IERL/RTP Mobile CEM system. The EPA IERL/RTP Mobile CEM system is housed in a 40 foot environmentally controlled bus. Installed in the bus are the instrumentation and sample conditioning equipment necessary to continuously monitor point source emissions.

The measurement sensors utilized are listed in Table 6. The data were acquired on a continuous basis and stored by an onboard microprocessor. Measured parameters were averaged and stored on a 15 minute basis during continuous monitoring.

A schematic of the total data generation/acquisition system is shown in Figure 6. This schematic depicts the interconnection of the sensors contained in the mobile laboratory. All signals were acquired using the onboard data logger. In addition to acquiring data and generating data reports, the data logger also provided instantaneous readouts which were useful for setting process conditions.

TABLE 5. LOW NO_x BOILER TEST PROGRAM MEASUREMENT PARAMETER SUMMARY

Measurement category	Specific measurement	Measurement site (see Figure 4)	Measurement method
Boiler operating parameters	1. Load	1. Steam plant control room	1. Classified
	2. Fuel flow rate	2. Steam plant control room	2. Classified
	3. Air flow rate	3. Steam plant control room	3. Classified
	4. Exhaust temperature	4. Steam plant control room	4. Classified
	5. Combustor inlet pressure	5. Steam plant control room	5. Classified
	6. Ambient temperature	6. Steam plant control room	6. Classified
	7. Ambient humidity	7. Steam plant control room	7. Classified
	8. Ambient pressure	8. Steam plant control room	8. Classified
	9. Steam flow rate for NO_x control	9. Steam plant control room	9. Classified
Boiler operating parameters	10. Fuel flow rate	10. Steam plant control room	10. Classified
	11. Outlet temperature	11. Steam plant control room	11. Classified
Boiler exhaust measurements	17. Oxygen content	17. Point A	17. EPA Method 20
	18. NO content	18. Point A	18. EPA Method 20
	20. CO content	20. Point A	20. EPA Method 10

TABLE 6. SAMPLING PARAMETERS AND CEMS METHODOLOGY

Parameter	Model/measurement	Data recording
O_2	MSA 802 (paramagnetic)	Strip chart and Kaye Digistrip
CO_2	Horiba PIR-2000 (NDIR)	Strip chart and Kaye Digistrip
CO	Horiba PIR-2000 (NDIR)	Strip chart and Kaye Digistrip
NO_x	Teco (Chemiluminescence)	Strip chart and Kaye Digistrip

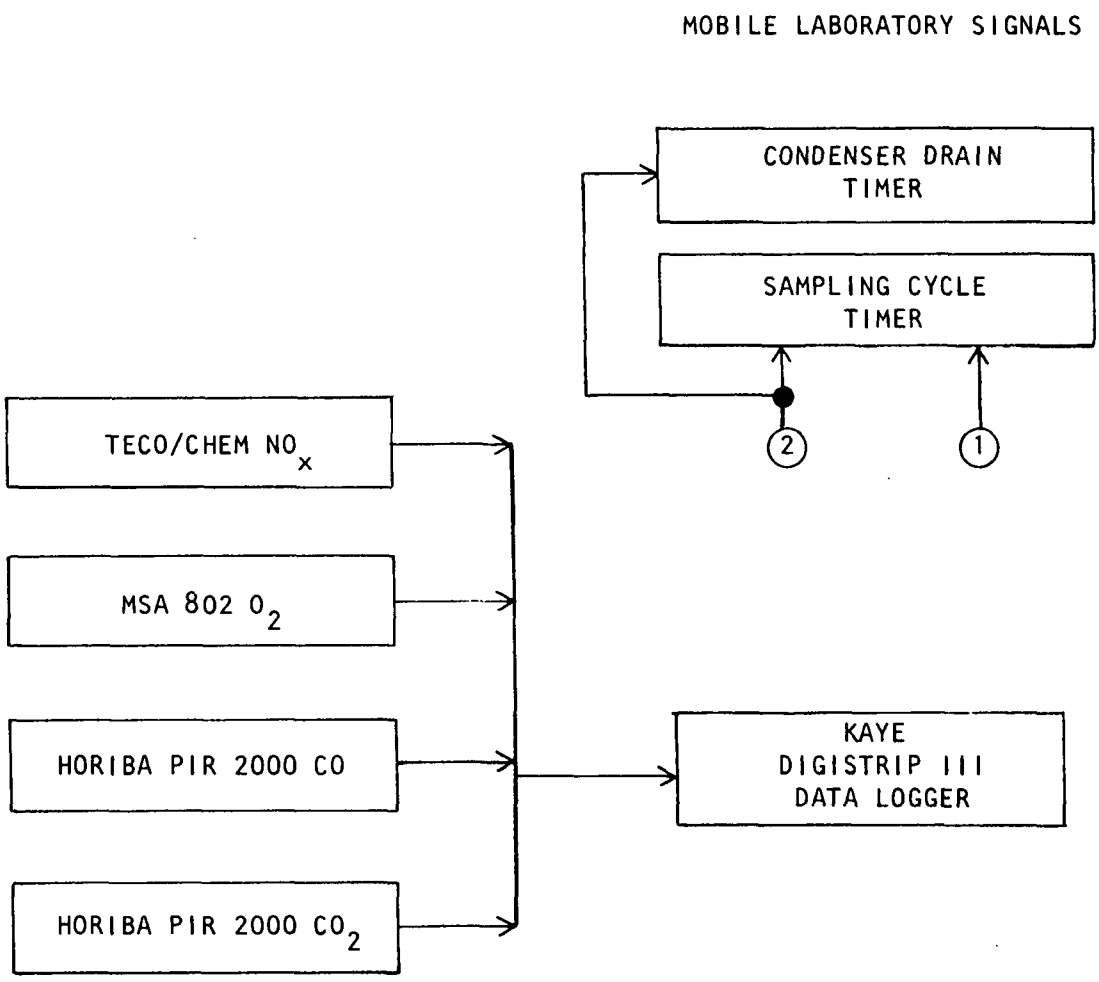

Figure 6. Data acquisition system schematic.

A schematic of the flow system is shown in Figure 7. Figures 8, 9, and 10 contain schematics of the valve switching box, the condensation/pumping system, and the sample distribution system. The system was purged manually once per shift to free the system of particulate matter from the valve switching box to the probe filter. Calibrations were conducted by closing the sampling valve and opening the calibration valve in the valve box, allowing calibration gases to pass from the downstream side of the sampling probe, through the sample line, and to the conditioning system and analyzers. The sampling location is connected to the mobile CEM via multitube heated sample line consisting of 3/8 inch OD thick-walled Teflon tubing.

Sample conditioning was accomplished utilizing filtration for particulate removal and condensation for moisture removal. Particulate matter was removed in the heated valve switching box using a low pressure drop glass fiber filter. The particulate free stream was transported through heat-traced Teflon tubing to the moisture removal system.

Moisture removal was accomplished by passing the sample gas through a dual pass condenser as shown in Figure 9. The first pass occurs under reduced pressure in which the pump draws the sample through the coil, followed by a second pass under pressure in which final moisture removal is accomplished. At this point, the dry sample gas is passed through the valve distribution system shown in Figure 10, which supplies a flow regulated sample stream to the instruments shown in Figure 7.

Data acquisition was accomplished with a Kaye Digistrip III Process Monitor. This unit is capable of accepting 48 analog signals at a scan rate of 10 seconds. The microprocessor acquires and processes the data, printing out interval reports and providing instantaneous responses. Data were collected and averaged at 15-minute intervals.

MEASUREMENT SYSTEM QUALITY ASSURANCE

The data generated by the Mobile CEMS were validated and quality assured using various manual test procedures and standard operating protocols. Quality control activities included the conduct of stratification and relative accuracy tests and the assessment of drift and precision as specified in Reference Methods 10 and 20 and proposed Appendix F.

Sequence of Events

The CEMs was placed onsite in the area designated by plant personnel. The sample transport lines were deployed between the sampling location and the bus. The filter-valve boxes and reference method instrumentation were installed at the sampling sites.

Upon completion of the installation, the instrumentation system was activated and allowed to come to equilibrium overnight. The instruments were calibrated and the stratification check conducted at the stack monitoring location. The placement of the tip of the CEM probe and reference method probe assembly was based on the results of the stratification check.

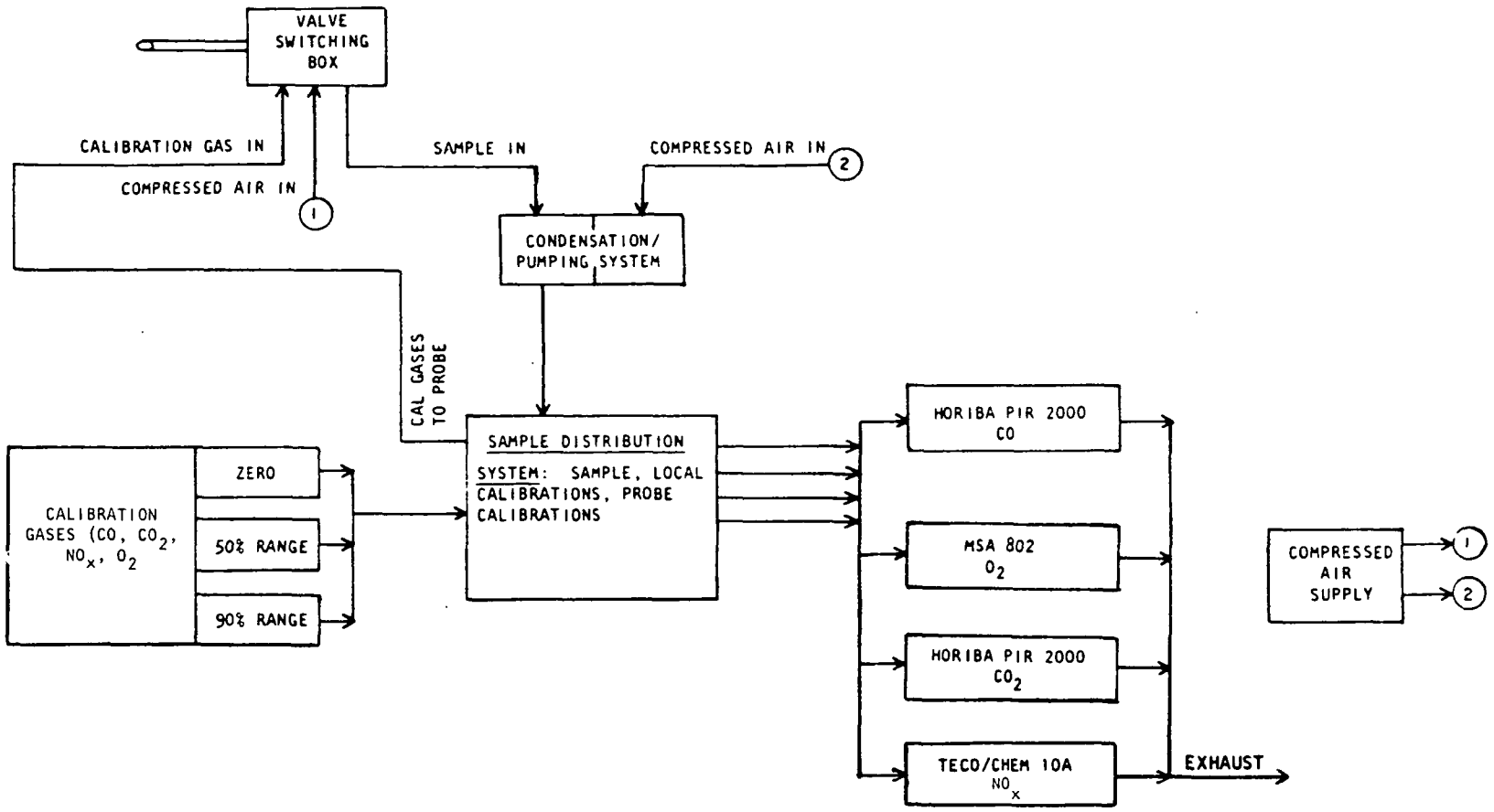

Figure 7. Mobile laboratory flow schematic.

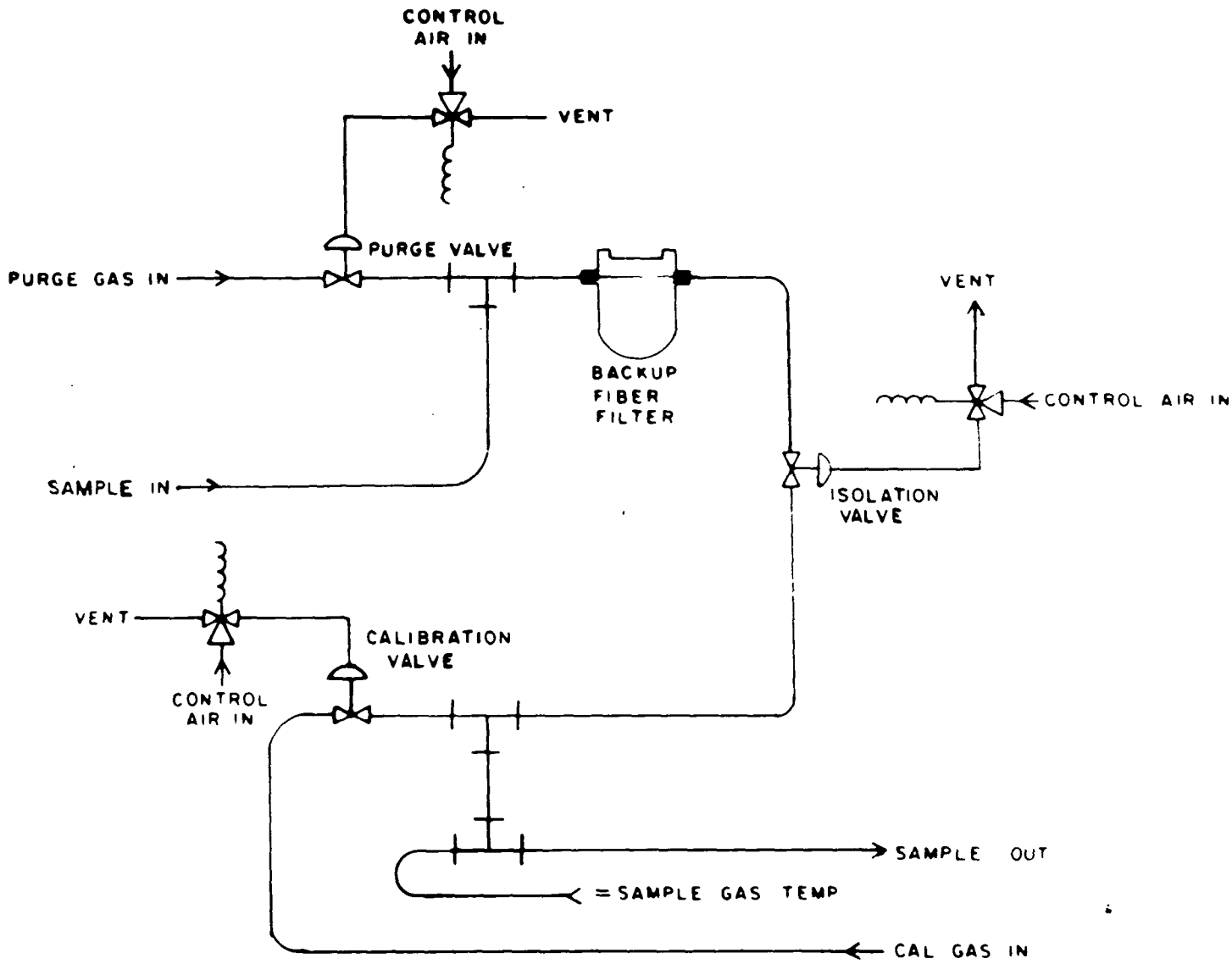

Figure 8. Valve box configuration.

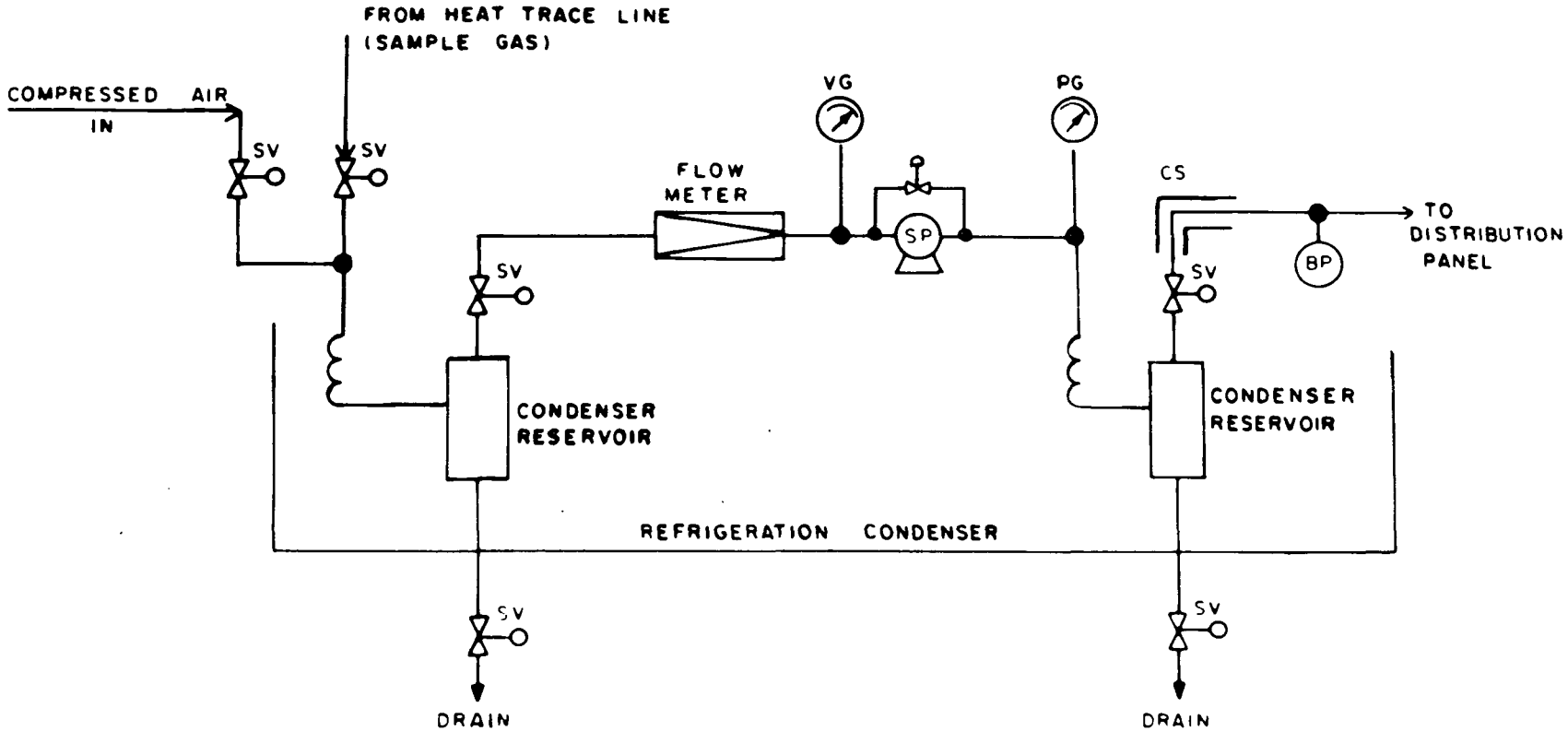

LEGEND

SV: SOLENOID VALVE
SP: SAMPLE PUMP
PG: PRESSURE GAUGE
VG: VACUUM GAUGE
CS: MOISTURE SENSOR
BP: BACK PRESSURE REGULATOR

Figure 9. Condensation/pumping system.

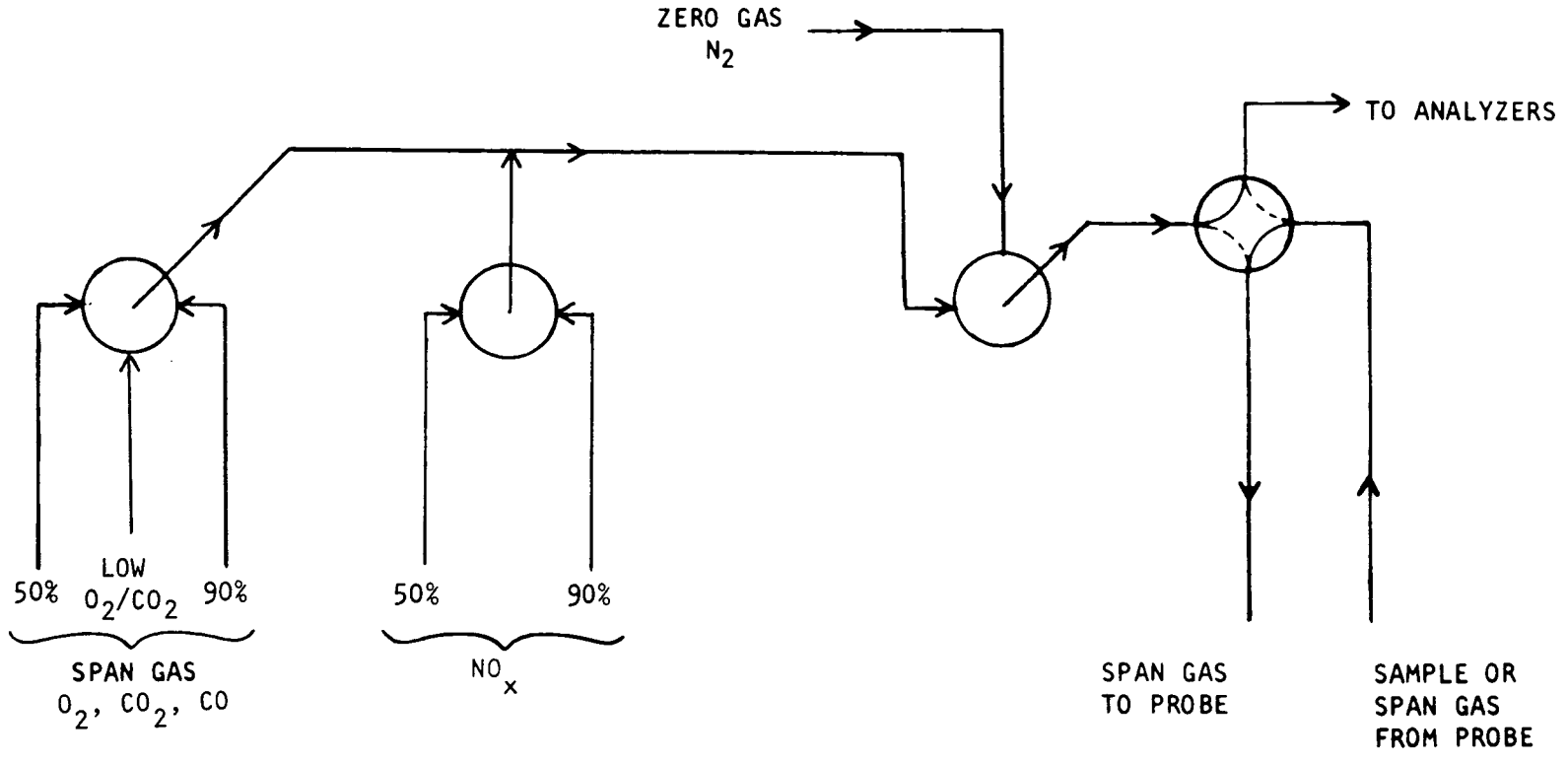

Figure 10. Sample distribution system.

Calibration Gas Traceability

All calibration gases utilized during the test program were obtained from Airco Industrial Gases with an analytical certification of concentration (NBS traceable).

Two upscale span concentrations were used for calibrating the NO_x and CO instruments and three upscale spans were used for the O_2 and CO_2 analyzers. Span gas concentrations are presented in Table 7. Pure nitrogen was used as a zero gas for all instruments.

TABLE 7. CALIBRATION GAS CONCENTRATIONS

	O_2/CO_2	NO_x	CO
Zero	N_2	N_2	N_2
Low	3.18/4.10	-	30.1
Mid	8.84/11.5	214 ppm	-
High	12.6/19.0	522 ppm	251 ppm

Stratification Check

A stratification test was conducted at the sample location to determine representative sample points for gaseous sampling. The stratification test consisted of measuring pollutant and diluent concentrations at each traverse point shown in Figure 5 for a sampling time of 1 minute plus the response time of the measurement system. Data collected at the traverse points were averaged and the standard deviation calculated. A relative standard deviation of less than 5 percent was considered an indication of a homogeneous flue stream.

Relative Accuracy

A relative accuracy test was conducted for the NO_x, CO_2 and O_2 sensors. The relative accuracy test consisted of 12 concurrent test replicates in which the flue gas was measured using the CEMS at the same time reference test procedures were conducted. Reference test procedures for oxides of nitrogen and CO_2/O_2 are Methods 7 and 3, respectively. A 30-minute test replicate for NO_x involved 3 grab flask samples collected at 5, 15 and 25 minutes into each relative accuracy test period. Oxygen and carbon dioxide samples were collected using an integrating bag type sampler and analyzed onsite using an Orsat analyzer.

Relative accuracy was not determined for the CO analyzer since no performance specification currently exists for this analyzer. In addition, CO was only being measured as an indication of combustion efficiency during each test condition.

Response Time

Monitor response time is reported as the slower of the average of three sets of upscale and downscale determinations. The upscale determination is the time it takes the monitor to respond from a zero calibration gas reading to a stable stack effluent reading. Conversely, the downscale determination is the time it takes the monitor to respond from a high-level calibration gas concentration to a stable stack effluent reading. The mean value of the upscale and downscale response times are determined and the slower value is reported. A response time of approximately 3 minutes is considered reasonable and was used as a system response limit. This performance criterion has been verified under previous programs and the result is 220 seconds.

Instrument Drift

Instrument drift was determined according to procedures outlined in the performance specifications and EPA Reference Method 20 during the three test conditions. To validate continuous emission data collected during these periods, instrument drift was determined based on calibration checks conducted before and after each test interval. The specification for this test is $\pm$ 2 percent of the span value.

Calibration Error

The calibration error test as specified in Reference Method 20 is based on the response of the monitors to zero, mid level, and high level calibration gases. For each test period, the instruments were zeroed with N_2 and calibrated with the mid-range calibration gas. The response of the mid and high range calibration gases were determined and compared with the method calibration error specification of $\pm$ 2 of the span gas value.

CEMS Calibration

Calibration procedures and frequency for the CEMs were conducted in accordance with procedures outlined in EPA Reference Methods 10 and 20 for CO, NO_x, CO_2 and O_2. Continuous emissions monitoring data collected during the test periods were validated with calibration drift determinations based on calibration data generated before and after each test condition.

Calibrations were conducted by analyzing a zero and multiple upscale concentrations covering the full scale measurement range. The standards were injected through the total system (excluding the probe). A calibration equation in the form of:

$$\text{Concentration} = m\ (\text{response}) + b$$

was constructed using a linear regression technique.

The acceptance procedure (calibration error specification) for an initial calibration involves inserting the responses obtained from the gas injections into the calibration equation and solving for the concentration. The result calculated from the equation was compared for difference to the accepted value of the gas as follows:

$$\% \text{ error} = \frac{\text{Obs} - \text{Acc}}{\text{Acc}} \times 100$$

where

Obs is the calculated value

Acc is the accepted value of the calibration gas.

If both upscale spans were within ± 2.0 percent error, the calibration is acceptable. For cases where this criterion is not met, the instrument linearity (for NDIRS) and/or span gas values must be checked.

The data obtained from calibrations conducted before and after the test periods were utilized to calculate instrument drift. These data indicate the overall drift for each parameter at zero, mid, and high scale and also supply information as to whether the drift is a result of random variation, absolute bias, or a combination of both.

Reference Methods

Reference method testing equipment was calibrated in accordance with the procedures outlined in the EPA Publication, "Quality Assurance Handbook for Air Pollution Measurement Systems, Volume III, Stationary Source Specific Methods."

ANALYTICAL PROCEDURES

The Reference Method analytical procedure used during this project is specified in the Federal Register, 18 August 1977, Reference Method 7 and EPA's Quality Assurance Handbook for Air Pollution Measurements Systems.

DATA REDUCTION, VALIDATION AND REPORTING

The data reduction methods are based on the requirements of the test program and calculations in 40 CFR 60, Appendix A Methods. All monitoring data, calibrations, calibration checks, and precision data were catalogued according to date and time for each parameter.

The raw data were reduced and validated using the current calibration presented in the Calibration Procedures section and emission calculation procedures outlined below.

Emission Calculations

A computerized data reduction system was used to process the reference method and continuous monitoring test data. Monitored emissions data input into the program included NO_x, CO, CO_2, and O_2.

NO_x emission rates were calculated on a ppm dry and lb/MBtu bases for stack emissions based on measured emission and diluent concentrations and published fuel parameters. Calculation procedures are outlined in the following paragraphs. NO emissions were measured on a dry basis since the flue gas NO_x composition for a gas fired combustion unit is essentially all nitric oxide. NO_x emission rates were converted from the measured concentration on a dry basis to lb/MBtu based on the F-factor method.

NO_x emission rates on a lb/MBtu using the F-factor method were calculated as follows:

$$E_{NO_x} = 1.1929 \times 10^{-7} \frac{\text{lb } NO_x}{\text{ft}^3\text{-ppm}} \times NO_{x\ ppmvd}\ F_D \left(\frac{20.9}{20.9-O_2}\right)$$

where

E_{NO_x} = NO_x mass emission rate (lb/MBtu)

$NO_{x\ ppmvd}$ = Measured NO_x on a dry basis (ppmvd)

F_D = F-factor $\frac{\text{dscf}}{\text{MBtu}}$

O_2 = Measured O_2 on a dry basis (percent)

Data Validation

Measured O_2 and CO_2 were verified utilizing the fuel factor, F_o. F_o values determined from measured O_2 and CO_2 values were compared to F_o values published in the Addendum to EPA Reference Method 3. The established F_o can be determined from the fuel analysis with the following equation:

$$F_o = \frac{0.209\ F_d}{F_c}$$

where

$$F_d = \frac{10^6\ \ 3.64(\%H) + 1.53(\%C) + 0.57(\%S) + 0.14(\%N) - 0.46(\%O)}{GCV}$$

$$F_c = \frac{10^6 \quad 0.321 \ (\%C)}{GCV}$$

F_o values were determined from measured O_2 and CO_2 concentrations with the equation:

$$F_o = \frac{20.9 - \%\ O_2\ dry}{\%\ CO_2\ dry}$$

Values should fall in the range of 1.6 to 1.9.

SECTION 5

PROGRAM QUALITY ASSURANCE

A detailed Test and Quality Assurance Plan was prepared and submitted for use under this project. The following subsections document the results of the various QA/QC procedures implemented during the test program.

MEASUREMENT SYSTEM PERFORMANCE

The mobile emissions laboratory utilized during the test program arrived onsite December 3, 1984. At this time the system was set up, brought online and the stratification test conducted. On December 5, the relative accuracy, drift and calibration error tests were conducted. Testing continued through December 6, 1984.

The results of the stratification test are shown in Table 8. The mean values for Ports A and B were 54.2 and 53.1 ng/J, respectively. A comparison of the variability of each port indicates that the flue stream was homogeneous and that no stratification problems existed. Overall, the mean value was 53.6 ng/J with a 1.9 percent relative standard deviation.

Results for the relative accuracy test are shown in Table 9. The results are presented on a volume basis for the NO_x, O_2 and CO_2 monitors and on an emission rate basis for the NO_x analyzer. As stated previously, relative accuracy was not determined for the CO monitor.

The relative accuracies for the O_2 and CO_2 analyzers on a volume basis are 0.22 percent O_2 and 0.24 percent CO_2, respectively. These correspond to 5.1 percent and 2.5 percent relative accuracy, respectively. The results for the NO_x analyzer on a volume and emission rate basis are 6.0 percent and 11.4 percent, respectively.

Results for the calibration error test are shown in Table 10 for the zero, mid and high span levels. Those entries footnoted with an "a" exceeded the expected performance criteria of $\pm$ 2 percent of the full scale measurement range.

Calibration drift test results for each test condition are summarized in Table 11 for each of the three span levels. Drift results are presented in terms of the relative percent difference between the predicted values of the pre- and post-test calibrations. At the zero level, the drift is compared to the full scale range whereas the span drift is relative to the respective span

TABLE 8. STRATIFICATION TEST RESULTS

Port	Point	ng/J NO_x	Port	Point	ng/J NO_x
A	1	53.3	B	1	53.5
	2	55.9		2	53.9
	3	53.9		3	53.2
	4	54.8		4	52.5
	5	52.8		5	52.8
	6	54.6		6	52.5
Mean		54.2	Mean		53.1
Std. Dev.		1.1	Std. Dev.		0.6
RSD		2.1%	RSD		1.1%

Overall

Mean = 53.6
Std. Dev. = 1.0
RSD = 1.9%

TABLE 9. RELATIVE ACCURACY TEST RESULTS

Parameter	Mean difference	Confidence coeficient	Relative accuracy
O_2	0.09	0.13	0.22% O_2 (5.1% RA)
CO_2	0.01	0.23	0.24% CO_2 (2.5% RA)
NO_x (volume)	2.4	1.5	6.0
NO_x (emission rate)	1.6	2.6	11.4

TABLE 10. CALIBRATION ERROR TEST RESULTS

Parameter	Test 1 (% F.S.)			Test 2 (% F.S.)			Test 3 (% F.S.)		
	Zero	Mid	High	Zero	Mid	High	Zero	Mid	High
NO_x	0	0.2	0.8	0.1	0	0.2	0.0	0.2	0.6
O_2	0	1.9	2.0	0.7	2.3[a]	1.3	0.7	2.3[a]	1.3
CO_2	0	2.9[a]	1.0	0.5	3.3[a]	1.9	0.0	4.8[a]	3.8[a]
CO	0.2	0.2	0.2	0.4	0.0	0.0	0.1	0.1	0.4

[a]Exceeds expected performance criterion of ± 2%.

TABLE 11. CALIBRATION DRIFT TEST CONDITIONS[a]

Parameter	Test 1 (%)			Test 2 (%)			Test 3 (%)		
	Zero	Mid	High	Zero	Mid	High	Zero	Mid	High
O_2	0.1	0.7	0.8	0.0	0.6	0.8	0.0	0.6	0.8
NO_x	0	0.9	1.1	0.0	0.5	0.4	0.0	1.4	1.0
CO	0.4	2.7[b]	0.8	0.3	1.3	0.0	0.1	6.6[b]	1.6
CO_2	0	3.5[b]	0.5	0.0	7.0[b]	6.3[b]	0.1	12.2[b]	11.6[b]

[a]Zero drift is in terms of percent full scale and span drift is stated in terms of relative percent difference from the accepted value of the span gas concentration.

[b]Exceeds expected drift criterion of 2.5%.

concentration. Those entries designated with a "b" exceeded the expected drift criterion of 2.5 percent. The primary emission parameters (NO_x and O_2) conformed to the drift criteria.

COMPLETENESS

The completeness of the emissions monitoring data is based on the 15-minute data file. Completeness is defined as the total number of valid observations relative to the total number of data quarters for each test conditions. The completeness percentages for tests 1, 2 and 3 are 93 percent, 100 percent, and 100 percent, respectively.

Completeness for the reference test data was judged in terms of the number of valid results obtained versus the number of runs conducted. Similarly, the completeness of the relative accuracy test data pairs (simultaneous monitor and reference method value) is based on the number of valid data pairs available versus the number of reference test runs conducted. The results for the reference test data completeness are 100 percent. Relative accuracy completeness is 100 percent.

DEVIATIONS FROM THE QUALITY ASSURANCE TEST PLAN

The following is a listing of the deviations from the quality assurance/test plan:

- Pre- and post-test calibrations were conducted by injecting the span gas directly to the analyzers instead of through the entire extraction/conditioning system due to the low supply of span gases.

- Test condition 3 was only conducted for 4 hours instead of 8 hours at the direction of the project officer.

- A four-point calibration approach was utilized for the O_2 and CO_2 analyzers instead of the three-point planned due to the slight nonlinearity of these two instruments.

- Calibration standards for the CO analyzer did not cover the range of measurements encountered during test conditions 1 and 2. GCA anticipated CO data in the range of 0-300 ppm which is typical of gas-fired steam generators. Based on the assumption, span gas concentrations were selected accordingly.

The above deviations from the quality assurance plan are expected to have no significant impact on the data. This conclusion is substantiated by the relative accuracy results as well as those results obtained from a cylinder gas audit conducted by the project officer.

The exceedance of the highest span value for CO measurements is not anticipated to compromise the program. This conclusion is based on the fact that CO was being monitored as a means of assessing relative combustion efficiency among the three test conditions. Also, the analyzer is capable of responding to concentrations in the range of 0-5000 ppm full scale. Estimated calibration error (based on Table 10 results) is most likely less than 2 percent of full scale.

APPENDIX A

15-MINUTE AVERAGED DATA FOR TEST CONDITIONS 1, 2 AND 3

GENERAL ELECTRIC POWER BOILER

NEW YORK

DAY	TIME	NOX PPM	O2 %	CO2 %	CO PPM	FO RATIO	STOIC CO PPM	NOX NG/J	NOX LB/ MBTU
339	1215	99	4.1	9.9	736^	1.700	915.6	57	0.133
339	1230	98	4.2	9.8	814^	1.693	1021.1	57	0.133
339	1245	98	4.1	9.9	683^	1.691	852.0	57	0.132
339	1300	93	4.8	9.5	808^	1.687	1049.1	56	0.130
339	1315	CEM OFF-LINE							
339	1330	83	7.3	8.2	188	1.656	288.6	59	0.138
339	1345	100	4.8	9.6	162	1.681	210.6	60	0.140
339	1400	93	4.7	9.6	625^	1.695	806.4	56	0.129
339	1415	CEM OFF-LINE							
339	1430	86	5.9	9.1	559^	1.648	777.0	55	0.129
339	1445	95	4.1	10.0	660^	1.683	819.7	55	0.127
339	1500	95	4.2	10.0	647^	1.681	807.8	55	0.128
339	1515	94	4.1	10.0	809^	1.684	1006.7	54	0.126
339	1530	92	4.3	9.8	717^	1.696	901.6	54	0.126
339	1545	94	4.1	9.9	717^	1.698	893.4	54	0.126
339	1600	93	4.1	9.9	860^	1.703	1069.5	54	0.124
339	1615	92	4.1	9.9	886^	1.696	1100.6	53	0.124
339	1630	93	4.1	10.0	684^	1.682	852.3	54	0.125
339	1645	91	4.3	9.8	781^	1.688	983.4	53	0.124
339	1700	93	4.1	9.9	779^	1.690	969.3	54	0.125
339	1715	93	4.1	9.9	784^	1.698	974.7	54	0.124
339	1730	92	4.1	9.9	925^	1.701	1148.9	53	0.123
339	1745	91	4.3	9.8	894^	1.700	1122.9	53	0.124
339	1800	93	4.1	9.9	809^	1.701	1005.3	54	0.125
339	1815	92	4.1	9.8	810^	1.716	1009.0	53	0.124
339	1830	92	4.1	9.7	807^	1.730	1004.1	53	0.124
339	1845	91	4.1	9.7	818^	1.726	1017.3	53	0.123

^=PARAMETER EXCEEDS TOP SPAN CONCENTRATION

GCA/TECHNOLOGY DIVISION 12-20-1984 08:06

GENERAL ELECTRIC POWER BOILER

NEW YORK

DAY	TIME	NOX PPM	O2 %	CO2 %	CO PPM	FO RATIO	STOIC CO PPM	NOX NG/J	NOX LB/ MBTU
340	915	65	4.5	9.1	1201^	1.800	1526.0	38	0.089
340	930	66	4.3	9.2	1212^	1.802	1522.7	38	0.089
340	945	66	4.3	9.2	1212^	1.802	1525.8	39	0.090
340	1000	66	4.3	9.3	1212^	1.796	1524.3	39	0.090
340	1015	66	4.5	9.2	1211^	1.796	1539.6	39	0.090
340	1030	67	4.3	9.3	1212^	1.794	1522.2	39	0.090
340	1045	67	4.3	9.3	1212^	1.778	1524.5	39	0.091
340	1100	67	4.3	9.4	1212^	1.770	1521.6	39	0.091
340	1115	68	4.3	9.4	1212^	1.765	1522.1	40	0.093
340	1130	68	4.5	9.3	1211^	1.758	1541.9	40	0.094
340	1145	69	4.3	9.5	1211^	1.747	1523.5	40	0.094
340	1200	69	4.2	9.5	1212^	1.754	1519.3	40	0.093
340	1215	69	4.2	9.5	1212^	1.756	1520.1	40	0.093
340	1230	68	4.4	9.3	1211^	1.767	1533.3	40	0.093
340	1245	69	4.3	9.5	1211^	1.741	1522.8	40	0.094
340	1300	69	4.3	9.5	1211^	1.749	1522.1	40	0.094
340	1315	70	4.3	9.4	1211^	1.759	1524.4	41	0.095
340	1330	69	4.3	9.4	1211^	1.778	1521.1	40	0.094
340	1345	69	4.5	9.2	1199^	1.789	1525.1	41	0.095
340	1400	69	4.2	9.3	1211^	1.797	1517.7	40	0.093
340	1415	69	4.2	9.1	1211^	1.824	1519.4	40	0.093
340	1430	69	4.3	9.0	1211^	1.843	1520.9	40	0.093
340	1445	67	4.4	8.9	1209^	1.858	1533.3	40	0.092
340	1500	68	4.2	9.0	1211^	1.843	1518.4	40	0.092
340	1515	68	4.3	9.1	1211^	1.826	1520.8	40	0.093
340	1530	68	4.2	9.2	1212^	1.807	1518.9	40	0.092
340	1545	68	4.2	9.2	1212^	1.802	1519.9	40	0.092
340	1600	68	4.3	9.2	1212^	1.800	1522.5	40	0.093
340	1615	70	4.2	9.3	1211^	1.785	1517.1	40	0.094
340	1630	70	4.2	9.5	1211^	1.750	1519.0	41	0.095
340	1645	70	4.3	9.5	1211^	1.745	1521.4	41	0.095
340	1700	69	4.2	9.4	1200^	1.778	1505.6	40	0.094

^=PARAMETER EXCEEDS TOP SPAN CONCENTRATION

GCA/TECHNOLOGY DIVISION 12-20-1984 08:07

GENERAL ELECTRIC POWER BOILER

NEW YORK

DAY	TIME	NOX PPM	O2 %	CO2 %	CO PPM	FO RATIO	STOIC CO PPM	NOX NG/J	NOX LB/ MBTU
341	915	98	6.2	8.0	33	1.832	46.3	65	0.150
341	930	99	6.1	8.1	32	1.825	45.6	65	0.151
341	945	99	6.1	8.0	32	1.836	44.9	65	0.151
341	1000	99	6.1	8.0	31	1.850	44.3	65	0.151
341	1015	97	6.2	7.9	32	1.873	45.0	64	0.149
341	1030	99	6.2	7.9	31	1.851	44.6	65	0.152
341	1045	98	6.1	7.9	32	1.861	44.8	65	0.150
341	1100	98	6.1	8.0	31	1.852	44.3	65	0.150
341	1115	99	6.1	8.0	31	1.848	44.2	65	0.151
341	1130	98	6.3	7.9	31	1.850	44.4	65	0.151
341	1145	99	6.1	8.0	31	1.839	44.3	65	0.151
341	1200	99	6.1	8.0	31	1.842	44.0	65	0.152
341	1215	100	6.1	8.0	31	1.854	43.5	65	0.152
341	1230	98	6.1	7.8	31	1.896	43.7	64	0.150
341	1245	99	6.2	7.9	31	1.869	43.6	66	0.153
341	1300	100	6.1	7.9	31	1.884	44.3	65	0.152
341	1315	100	6.1	7.8	32	1.894	44.5	65	0.152

^=PARAMETER EXCEEDS TOP SPAN CONCENTRATION

APPENDIX B

CALIBRATION DATA AND DATA REDUCTION CALIBRATION EQUATIONS

DEFINITIONS

(1) Composite Calibration Equation--The equation used to transform monitoring voltage data into engineering units of ppm (v/v) or % (v/v). This equation is in the form of:

$$C = m(V) + b$$

where: C is the concentration on a volume basis (ppm/%)

V is the monitor voltage

m is the slope

b is the intercept

The equation is constructed using a linear regression technique in which all responses obtained before and after each test condition are used to calculate the linear regression coefficients m and b. These coefficients are used to reduce the voltage data for a given test condition.

(2) Monitor Concentration Initial--The concentration predicted from the input of individual zero or span gas voltage responses into the calibration equation. These voltages are those obtained from the pretest condition calibrations.

(3) Monitor Concentration Final--Calculated the same as item 2 except that voltages obtained from final test condition calibration are substituted into the composite calibration equation.

(4) Difference--The difference between the initial and final monitor concentrations.

(5) % Drift--The relative % difference between the initial and final monitor concentrations compared to the actual span gas concentration. For zero, the full scale span value is used instead of the span gas concentration.

Summary of Calibration Equations for Data Reduction

Day	Parameter	m	b	r
12/4	NO_x	509	0.4	1.000
	O_2	23.8	-0.2	0.9991
	CO	503	1.0	1.000
	CO_2	18.8	-0.2	0.9997
12/5	NO_x	514	0.1	1.000
	O_2	23.5	-0.2	0.9991
	CO	502	0.5	1.000
	CO_2	18.1	-0.2	0.9984
12/6	NO_x	507	0.6	1.000
	O_2	24.7	-0.2	0.9990
	CO	513	2.1	1.000
	CO_2	19.1	-0.1	0.9950

Drift Data for December 4, 1984

NO_x

Span	Monitor concentration Initial	Final	Difference	% Drift
z =	-0.1	-0.1	0	0
214 =	213	215	-2	-0.9
522 =	518	525	-6	-1.1

O_2

Span	Monitor concentration Initial	Final	Difference	% Drift
z	-0.1	-0.1	0	0
3.18	3.23	3.24	-0.01	-0.3
8.84	9.12	9.18	-0.06	-0.7
12.6	12.3	12.4	-0.1	-0.8

CO

Span	Monitor concentration Initial	Final	Difference	% Drift
z	-1.0	0.9	-1.9	-0.4
30.1	29.3	31.0	-0.8	-2.7
251	250	252	-2.0	-0.8

CO_2

Span	Monitor concentration Initial	Final	Difference	% Drift
z	-0.1	-0.1	0	0
4.10	4.17	3.98	0.19	4.6
11.5	12.1	11.7	0.4	3.5
19.0	18.8	18.7	0.1	0.5

GENERAL ELECTRIC

ANALYZERS

DAILY 3-POINT CALIBRATION CHECK

I. Analyzer Data

A. O_2 Analyzer MFG _____ S/N _____

Zero Setting _____ Span _____

B. SO_2 Analyzer MFG _____ S/N _____

Coarse Zero Setting _____ Fine Zero _____ Span _____

C. CO_2 Analyzer MFG _____ S/N _____

Zero Setting _____ Span _____

D. NO_x Analyzer MFG _____ S/N _____

Zero Setting _____ Span _____

II. Data TUESDAY, DECEMBER 4th, 1984 MORNING CAL 0745

Run No.	O_2 Conc	O_2 Reading	CO Conc	CO Reading	CO_2 Conc	CO_2 Reading	SO_2 Conc	SO_2 Reading	NO_x Conc	NO_x Reading
1	ZERO	0.0040	ZERO	-0.0040	ZERO	0.0041			ZERO	-0.0009
2	3.18	0.1440	30.1	0.0563	4.10	0.2310			214	0.4178
3	8.84	0.3915	251	0.4949	11.5	0.6495			522	1.0180
	12.6	0.5260			19.0	1.0100				
	20.9	0.8032								

NOT USED in FINAL DATA Reduction

III. Data Reduction

Calculate calibration equation using least square linear regression.

Y = mx + b where:

Y = concentration v/v

m = slope conc/mv

x = reading in mv

b = intercept concentration v/v

	O_2	SO_2	CO_2	CO	NO_x
m =	23.4		18.0	511	514
b =	0		0	0	0
Corr. coeff. r^2 =					

Figure 8-14. Analyzers, daily calibration check.

GCA CORPORATION Technology Division

GENERAL ELECTRIC

ANALYZERS

DAILY 3-POINT CALIBRATION CHECK

I. Analyzer Data

A. O_2 Analyzer MFG _____ S/N _____

Zero Setting _____ Span _____

B. SO_2 Analyzer MFG _____ S/N _____

Coarse Zero Setting _____ Fine Zero _____ Span _____

C. CO_2 Analyzer MFG _____ S/N _____

Zero Setting _____ Span _____

D. H_2O Analyzer MFG _____ S/N _____

Zero Setting _____ Span _____

II. Data TUESDAY, DECEMBER 4th, 1984 EVENING CALIBRATION 1850

Run No.	O_2 Conc	O_2 Reading	CO Conc	CO Reading	CO_2 Conc	CO_2 Reading	SO_2 Conc	SO_2 Reading	NO_x Conc	NO_x Reading
1	ZERO	0.0032	ZERO	-0.0003	ZERO	0.0022			ZERO	-0.0010
2	3.18	0.1445	30.1	0.0595	4.10	0.2211			214	0.4225
3	8.84	0.3938	251	0.4995	11.5	0.6320			522	1.0315
	12.6	0.5288			19.0	1.0015				

III. Data Reduction

Calculate calibration equation using least square linear regression.

Y - mx + b where:

Y = concentration v/v

m = slope conc/mv

x = reading in mv

b = intercept concentration v/v

	O_2	SO_2	CO_2	CO	NO_x
m =	23.1		18.3	556	514
b =	0		0	0	0
Corr. coeff. r^2 =					

Figure 8-14. Analyzers, daily calibration check.

Drift Data for December 5, 1984

NO_x

Span	Monitor concentration Initial	Final	Difference	% Drift
z	0.3	0.2	0.1	0.0
214	214	213	1.0	0.5
522	523	521	2.0	0.4

O_2

Span	Monitor concentration Initial	Final	Difference	% Drift
z	-0.1	-0.1	0.0	0.0
3.18	3.23	3.22	0.01	0.3
8.84	9.18	9.13	0.05	0.6
12.6	12.4	12.3	0.1	0.8

CO

Span	Monitor concentration Initial	Final	Difference	% Drift
z	1.9	0.5	1.4	0.3
30.1	30.3	29.9	0.4	1.3
251	251	251	0.0	0.0

CO_2

Span	Monitor concentration Initial	Final	Difference	% Drift
z	-0.1	-0.1	0.0	0.0
4.10	4.26	3.92	0.34	8.3
11.5	12.2	11.4	0.80	7.0
19.0	19.4	18.2	1.2	6.3

GENERAL ELECTRIC

ANALYZERS

DAILY 3-POINT CALIBRATION CHECK

I. Analyzer Data

A. O_2 Analyzer MFG _____ S/N _____

Zero Setting _____ **Span** _____

B. SO_2 Analyzer MFG _____ S/N _____

Coarse Zero Setting _____ **Fine Zero** _____ **Span** _____

C. CO_2 Analyzer MFG _____ S/N _____

Zero Setting _____ **Span** _____

D. NO_x Analyzer MFG _____ S/N _____

Zero Setting _____ **Span** _____

II. Data DECEMBER 5, 1984 MORNING 0720

Run No.	O_2 Conc	O_2 Reading	CO Conc	CO Reading	CO_2 Conc	CO_2 Reading	SO_2 Conc	SO_2 Reading	NO_x Conc	NO_x Reading
1	0	0.0029	0	-0.0020	0	0.0055			0	0.0003
2	3.18	0.1457	30.1	0.0595	4.10	0.2447			214	0.4159
3	8.84	0.3985	251	0.4997	11.5	0.6830			522	1.0180
	12.6	0.5345			19.0	1.0800				

III. Data Reduction

Calculate calibration equation using least square linear regression.

Y = mx + b where:

Y = concentration v/v

m = slope conc/mv

x = reading in mv

b = intercept concentration v/v

	O_2	~~SO_2~~ NO_x	CO_2	CO	Moisture
m =	22.2	517	19.0	500	
b =	0	0	0	0	
Corr. coeff. r^2 =					

Figure 8-14. Analyzers, daily calibration check.

GCA CORPORATION
Technology Division
GCA

GENERAL ELECTRIC

ANALYZERS

DAILY 3-POINT CALIBRATION CHECK

I. Analyzer Data

A. O_2 Analyzer MFG _____ S/N _____

Zero Setting _____ **Span** _____

B. SO_2 Analyzer MFG _____ S/N _____

Coarse Zero Setting _____ **Fine Zero** _____ **Span** _____

C. CO_2 Analyzer MFG _____ S/N _____

Zero Setting _____ **Span** _____

D. NO_x Analyzer MFG _____ S/N _____

Zero Setting _____ **Span** _____

II. Data DECEMBER 5, 1984 EVENING 1702

Run No.	O_2 Conc	O_2 Reading	CO Conc	CO Reading	CO_2 Conc	CO_2 Reading	SO_2 Conc	SO_2 Reading	NO_x Conc	NO_x Reading
1	0	0.0032	0	0.0000	0	0.0030			0	0.0002
2	3.18	0.1450	30.1	0.0585	4.10	0.2260			214	0.4145
3	8.84	0.3965	251	0.4980	11.5	0.6415			522	1.0133
	12.6	0.5320			19.0	1.0148				

III. Data Reduction

Calculate calibration equation using least square linear regression.

Y = mx + b where:

Y = concentration v/v

m = slope conc/mv

x = reading in mv

b = intercept concentration v/v

	O_2	~~SO_2~~ NO_x	CO_2	CO	Moisture
m =	22.0	514	17.9	507	
b =	0	0	0	0	
Corr. coeff. r^2 =					

Figure 8-14. Analyzers, daily calibration check.

GCA CORPORATION
Technology Division

Drift Data for December 6, 1984

NO_x

Span	Monitor concentration Initial	Final	Difference	% Drift
z	0.2	0.4	-0.2	0.0
214	215	212	3.0	1.4
522	525	520	5.0	1.0

O_2

Span	Monitor concentration Initial	Final	Difference	% Drift
z	-0.1	-0.1	0.0	0.0
3.18	3.24	3.23	0.01	0.3
8.84	9.19	9.14	0.05	0.6
12.6	12.4	12.3	0.1	0.8

CO

Span	Monitor concentration Initial	Final	Difference	% Drift
z	0.6	0.0	0.6	0.1
30.1	30.8	28.8	2.0	6.6
251	253	249	4.0	1.6

CO_2

Span	Monitor concentration Initial	Final	Difference	% Drift
z	0.0	-0.10	-0.10	0.1
4.1	4.38	3.85	0.53	12.9
11.5	12.5	11.1	1.4	12.2
19.0	19.8	17.6	2.2	11.6

GENERAL ELECTRIC

ANALYZERS

DAILY 3-POINT CALIBRATION CHECK

I. Analyzer Data

A. O_2 Analyzer MFG _____ S/N _____

Zero Setting _____ Span _____

B. SO_2 Analyzer MFG _____ S/N _____

Coarse Zero Setting _____ Fine Zero _____ Span _____

C. CO_2 Analyzer MFG _____ S/N _____

Zero Setting _____ Span _____

D. NO_x Analyzer MFG _____ S/N _____

Zero Setting _____ Span _____

II. Data DECEMBER 6, 1984 MORNING 0735

Run No.	O_2 Conc	O_2 Reading	CO Conc	CO Reading	CO_2 Conc	CO_2 Reading	SO_2 Conc	SO_2 Reading	NO_x Conc	NO_x Reading
1	0	0.0030	0	-0.0029	0	0.0061			0	-0.0007
2	3.18	0.1395	30.1	0.0560	4.10	0.2330			214	0.4225
3	8.84	0.3805	251	0.4880	11.5	0.6595			522	1.0330
	12.6	0.5095			19.0	1.0375				

III. Data Reduction

Calculate calibration equation using least square linear regression.

Y = mx + b where:

Y = concentration v/v

m = slope conc/mv

x = reading in mv

b = intercept concentration v/v

	O_2	~~SO_2~~ NO_x	CO_2	CO	Moisture
m =	23.6	500	17.3	522	
b =	0	0	0	0	
Corr. coeff. r^2 =					

Figure 8-14. Analyzers, daily calibration check.

GENERAL ELECTRIC

ANALYZERS

DAILY 3-POINT CALIBRATION CHECK

I. Analyzer Data

A. O_2 Analyzer MFG _____ S/N _____

Zero Setting _____ Span _____

B. SO_2 Analyzer MFG _____ S/N _____

Coarse Zero Setting _____ Fine Zero _____ Span _____

C. CO_2 Analyzer MFG _____ S/N _____

Zero Setting _____ Span _____

D. H_2O Analyzer MFG _____ S/N _____

Zero Setting _____ Span _____

II. Data DECEMBER 6, 1984 EVENING/AFTERNOON 1330

Run No.	O_2 Conc	O_2 Reading	CO Conc	CO Reading	CO_2 Conc	CO_2 Reading	NOx ~~SO_2~~ Conc	NOx ~~SO_2~~ Reading	Moisture Conc	Moisture Reading
1	0	.0031	0	-.004	0	-.002	0	-.0003		
2	3.18	.1388	30.1	.0520	4.10	.2056	214	.4171		
3	8.84	.3785	251	.4820	11.5	.5855	522	1.0235		
	12.6	.5073			19.0	.9250				

III. Data Reduction

Calculate calibration equation using least square linear regression.

Y - mx + b where:

Y = concentration v/v

m = slope conc/mv

x = reading in mv

b = intercept concentration v/v

	O_2	NOx ~~SO_2~~	CO_2	CO	Moisture
m =	23.5	506	19.5	522	
b =	0	0	0	0	
Corr. coeff. r^2 =					

Figure 8-14. Analyzers, daily calibration check.

APPENDIX C

REFERENCE TEST
METHOD FIELD
DATA SHEETS

EVACUATED FLASK FIELD DATA

DATE: 12/05/84 W.O. NO. _____

CLIENT: EPA

PLANT: GENERAL ELECTRIC

SAMPLING LOCATION: PORT B STACK

POLLUTANT: NOx

SAMPLER: SYLVIA, HUMPHREYS

FIELD DATA

Run No. ~~X~~ 1	A	B	~~C~~	~~D~~ C
Clock Time	9 30	9.40	~~9 50~~	950
Flask No./Valve No.	17/32	23/9	~~5/30~~	37/43
Volume of Flask Ml.	25	25	~~25~~	
Flask pressure before sampling in Hg	-24.7	-26.4	~~-25.2~~	-24.6
Flask pressure after sampling in Hg	+0.5	+0.1	+0.2	
Flask temperature °F before sampling	3.5°C	→	~~////~~	→
Flask temperature °F after sampling	14.2	→	→	
Barometric pressure before sampling	30.24	→	~~////~~	→
Barometric pressure after sampling	29.54	→	→	
pH adjusted (9-12)	✓	✓	✓	

GCA CORPORATION
Technology Division

PLANT GE N.Y.

SAMPLE LOCATION STACK

DATE 12/5/84

RUN TEST #2 - RUN #1

OPERATOR GRAHAM

W. O. NO.

COMMENTS:

SAMPLE POINT	TIME	(CO_2) READING 1	(O_2) READING 2		(CO) READING 3	
			ACTUAL	NET	ACTUAL	NET
	0930	9.0	13.6	4.6	14.2	.4
		9.0	13.6	4.6	14.2	.4
		9.0	13.6	4.6	14.2	.4

Net O_2 reading = Reading 2 - Reading 1 (Actual)

Net CO reading = Reading 3 - Reading 2 (Actual)

GCA CORPORATION
Technology Division
GCA

EVACUATED FLASK FIELD DATA

DATE: 12/05/84 W.O. NO. _____

CLIENT: EPA

PLANT: GENERAL ELECTRIC

SAMPLING LOCATION: PORT B STACK

POLLUTANT: NO_x

SAMPLER: SYLVIA HUMPHREYS

FIELD DATA

Run No. 2	A	B	C	D
Clock Time	1005	1015	1025	
Flask No./Valve No.	21/21	10/25	18/26	
Volume of Flask Ml.	25	25	25	
Flask pressure before sampling in Hg	-25.3	-25.7	-24.9	
Flask pressure after sampling in Hg	-1.4 ~~-25.3~~	+0.4	-1.5	
Flask temperature °C before sampling	38.9	→	→	
Flask temperature °F after sampling	13.9	→	→	
Barometric pressure before sampling	30.24	→	→	
Barometric pressure after sampling	29.54	→	→	
pH adjusted (9-12)	✓	✓	✓	

GCA CORPORATION
Technology Division
GCA

PLANT G.E., N.Y.

SAMPLE LOCATION STACK

DATE 12/5/84

RUN TEST #2 - RUN #2

OPERATOR GRACIANO

W. O. NO.

COMMENTS:

SAMPLE POINT	TIME	(CO_2) READING 1	(O_2) READING 2		(CO) READING 3	
			ACTUAL	NET	ACTUAL	NET
	1000	9.4	13.8	4.4	14.2	.6
		9.4	13.8	4.4	14.2	.6
		9.4	13.8	4.4	14.2	.6

Net O_2 reading = Reading 2 - Reading 1 (Actual)

Net CO reading = Reading 3 - Reading 2 (Actual)

EVACUATED FLASK FIELD DATA

DATE: 1-10-5/84 W.O. NO. _____

CLIENT: EPA

PLANT: GENERAL ELECTRIC

SAMPLING LOCATION: PORT 2 STACK

POLLUTANT: NOx

SAMPLER: SYLVIA, HUMPHREYS

FIELD DATA

Run No. ~~2~~ ~~4~~ 3	A	B	C	D
Clock Time	1035	1045	1055	
Flask No./Valve No.	~~37/45~~ 5/30	14/45	19/40	
Volume of Flask Ml.	25	25	25	
Flask pressure before sampling in Hg	-25.3	-25.1	-24.9	
Flask pressure after sampling in Hg	-1.3	-1.2	-1.4	
Flask temperature °C before sampling	3.3	3.5	3.7	
Flask temperature °F after sampling	16.4 →			
Barometric pressure before sampling	30.24	30.24	30.24	
Barometric pressure after sampling	29.54 →			
pH adjusted (9-12)	✓	✓	✓	

GCA CORPORATION
Technology Division
GCA

PLANT G E, N.Y.

SAMPLE LOCATION Stack

DATE 12/5/84

RUN TEST #2 RUN #3

OPERATOR GRAZIANO

W. O. NO.

COMMENTS:

SAMPLE POINT	TIME	(CO_2) READING 1	(O_2) READING 2		(CO) READING 3	
			ACTUAL	NET	ACTUAL	NET
	1030	9.4	13.8	4.4	14.2	.6
		9.4	13.8	4.4	14.2	.6
		9.4	13.8	4.4	14.2	.6

Net O_2 reading = Reading 2 - Reading 1 (Actual)

Net CO reading = Reading 3 - Reading 2 (Actual)

GCA CORPORATION
Technology Division
GCA

EVACUATED FLASK FIELD DATA

DATE: 12/05/84 W.O. NO. _____

CLIENT: EPA

PLANT: GENERAL ELECTRIC

SAMPLING LOCATION: POINT B STACK

POLLUTANT: NOx

SAMPLER: SYLVIA, HUMPHREYS

FIELD DATA

Run No. #4	A	B	C	D
Clock Time	1105	1115	1125	
Flask No./Valve No.	30/48	33/42	22/1	
Volume of Flask Ml.	25	25	25	
Flask pressure before sampling in Hg	-25.1	-24.9	-24.5	
Flask pressure after sampling in Hg	-0.8	-1.6	-0.2	
Flask temperature °F before sampling	3.6	3.4	3.9	
Flask temperature °F after sampling	17.4	→	→	
Barometric pressure before sampling	30.24	30.24	30.24	
Barometric pressure after sampling	29.54	→	→	
pH adjusted (9-12)	✓	✓	✓	

GCA CORPORATION
Technology Division
GCA

PLANT G.E N.Y.

SAMPLE LOCATION STACK

DATE 12/5/84

RUN TEST #2 - RUN #4

OPERATOR GRAZIANO

W. O. NO.

COMMENTS:

SAMPLE POINT	TIME	(CO_2) READING 1	(O_2) READING 2		(CO) READING 3	
			ACTUAL	NET	ACTUAL	NET
	1100	9.2	13.6	4.4	14.0	.4
		9.2	13.6	4.4	14.0	.4
		9.2	13.6	4.4	14.0	.4

Net O_2 reading = Reading 2 - Reading 1 (Actual)

Net CO reading = Reading 3 - Reading 2 (Actual)

EVACUATED FLASK FIELD DATA

DATE: [illegible] W.O. NO. _____

CLIENT: EPA

PLANT: GENERAL ELECTRIC

SAMPLING LOCATION: PORT B STACK

POLLUTANT: NOx

SAMPLER: SYLVIA, HUMPHREYS

FIELD DATA

Run No. 5	A	B	C	D
Clock Time	11 35	11 45	11 55	
Flask No./Valve No.	34/54	35/55	28/50	
Volume of Flask Ml.	25	25	25	
Flask pressure before sampling in Hg	-24.9	-27.2	-25.1	
Flask pressure after sampling in Hg	-1.3	-1.7	+0.9	
Flask temperature °F before sampling	3.8	3.5	3.5	
Flask temperature °F after sampling	15.3	→	→	
Barometric pressure before sampling	30.24	30.24	30.24	
Barometric pressure after sampling	29.54	→	→	
pH adjusted (9-12)	✓	✓	✓	

GCA CORPORATION
Technology Division
GCA

PLANT G.E. N.Y.

SAMPLE LOCATION Stack

DATE 12/5/84

RUN TEST # 2 - RUN # 5

OPERATOR GRAZIANO

W. O. NO.

COMMENTS:

SAMPLE POINT	TIME	(CO_2) READING 1	(O_2) READING 2		(CO) READING 3	
			ACTUAL	NET	ACTUAL	NET
	1130	9.4	13.8	4.4	14.2	.4
		9.4	13.8	4.4	14.2	.4
		9.4	13.8	4.4	14.2	.4

Net O_2 reading = Reading 2 - Reading 1 (Actual)

Net CO reading = Reading 3 - Reading 2 (Actual)

GCA CORPORATION
Technology Division
GCA

EVACUATED FLASK FIELD DATA

DATE: 12/05/84 W.O. NO. _____

CLIENT: EPA

PLANT: GENERAL ELECTRIC

SAMPLING LOCATION: FORT C STACK

POLLUTANT: NOx

SAMPLER: SYLVIA, HUMPHREYS

FIELD DATA

Run No. 6	A	B	C	D
Clock Time	1205	1215	1225	
Flask No./Valve No.	7/H	26/51	38/G	
Volume of Flask Ml.	25	25	25	
Flask pressure before sampling in Hg	-25.3	-24.5	-25.0	
Flask pressure after sampling in Hg	-1.1	-1.0	-1.0	
Flask temperature °F/C before sampling	4.5	38	5.2	
Flask temperature °F after sampling	14.4	→	→	
Barometric pressure before sampling	30.24	→	→	
Barometric pressure after sampling	29.54	→	→	
pH adjusted (9-12)	✓	✓	✓	

GCA CORPORATION
Technology Division
GCA

PLANT G.E. B.4

SAMPLE LOCATION STACK

DATE 12/5/84

RUN TEST #2 - RUN #6

OPERATOR GRAZIANO

W. O. NO.

COMMENTS:

SAMPLE POINT	TIME	(CO_2) READING 1	(O_2) READING 2		(CO) READING 3	
			ACTUAL	NET	ACTUAL	NET
	1200	9.2	13.6	4.4	14.0	.4
		9.2	13.6	4.4	14.0	.4
		9.2	13.6	4.4	14.0	.4

Net O_2 reading = Reading 2 - Reading 1 (Actual)

Net CO reading = Reading 3 - Reading 2 (Actual)

GCA CORPORATION
Technology Division
GCA

EVACUATED FLASK FIELD DATA

DATE: 12/05/84 W.O. NO. _____

CLIENT: EPA

PLANT: GENERAL ELECTRIC

SAMPLING LOCATION: PORT B STACK

POLLUTANT: VOC

SAMPLER: SYLVIA, HUMPHREYS

FIELD DATA

Run No. ~~1~~ 7	A	B	C	D
Clock Time	1235	1245	1255	
Flask No./Valve No.	22/11	25/31	31/17	
Volume of Flask Ml.	25	25	25	
Flask pressure before sampling in Hg	-25.4	-24.6	-24.7	
Flask pressure after sampling in Hg	+1.3	-0.2	-0.7	
Flask temperature ~~°F~~ °C before sampling	5.3	4.6	4.9	
Flask temperature °F after sampling	13.3	→	→	
Barometric pressure before sampling	30.24	→	→	
Barometric pressure after sampling	29.54	→	→	
pH adjusted (9-12)	✓	✓	✓	

GCA CORPORATION
Technology Division
GCA

PLANT G.E. PJ

SAMPLE LOCATION STACK

DATE 12/5/84

RUN TEST #2 - RUN #7

OPERATOR GRAZIANO

W. O. NO.

COMMENTS:

SAMPLE POINT	TIME	(CO_2) READING 1	(O_2) READING 2		(CO) READING 3	
			ACTUAL	NET	ACTUAL	NET
	~~9.4~~ 1230	9.4	14.0	4.4	14.2	.2
	~~9.4~~	9.4	14.0	4.4	14.2	.2
	~~9.4~~	9.4	14.0	4.4	14.2	.2

Net O_2 reading = Reading 2 - Reading 1 (Actual)

Net CO reading = Reading 3 - Reading 2 (Actual)

GCA CORPORATION
Technology Division
GCA

EVACUATED FLASK FIELD DATA

DATE: 1/25/84 W.O. NO. _____

CLIENT: EPA

PLANT: GENERAL ELECTRIC

SAMPLING LOCATION: PORT B STACK

POLLUTANT: NOx

SAMPLER: SYLVIA, HUMPHREYS

FIELD DATA

Run No. ~~7~~ 8	A	B	C	D
Clock Time	1305	1315	1325	
Flask No./Valve No.	1/15	2/10	11/16	
Volume of Flask Ml.	25	25	25	
Flask pressure before sampling in Hg	-24.5	-25.3	-24.7	
Flask pressure after sampling in Hg	-1.4	-1.8	-1.6	
Flask temperature °F before sampling	5.5	5.2	5.7	
Flask temperature °F after sampling	13.2 →			
Barometric pressure before sampling	30.24 →			
Barometric pressure after sampling	29.54 →			
pH adjusted (9-12)	✓	✓	✓	

GCA CORPORATION
Technology Division
GCA

PLANT G.E. N.Y.

SAMPLE LOCATION Stack

DATE 12/5/84

RUN TEST #2 - RUN #8

OPERATOR GRAZIANO

W. O. NO.

COMMENTS:

SAMPLE POINT	TIME	(CO_2) READING 1	(O_2) READING 2		(CO) READING 3	
			ACTUAL	NET	ACTUAL	NET
	1300	9.2	13.8	4.6	14.0	.2
		9.2	13.8	4.6	14.0	.2
		9.2	13.8	4.6	14.0	.2

Net O_2 reading = Reading 2 - Reading 1 (Actual)

Net CO reading = Reading 3 - Reading 2 (Actual)

GCA CORPORATION
Technology Division
GCA

EVACUATED FLASK FIELD DATA

DATE: 12/05/89 W.O. NO. _____

CLIENT: EPA

PLANT: GENERAL ELECTRIC

SAMPLING LOCATION: PORT B STACK

POLLUTANT: NOx

SAMPLER: SYLVIA, HUMPHREYS

FIELD DATA

Run No. ~~A~~ 9	A	B	C	D
Clock Time	1335	1345	1355	
Flask No./Valve No.	36/52	29/53	9/A	
Volume of Flask Ml.	25	25	25	
Flask pressure before sampling in Hg	-25.1	-26.0	-25.5	
Flask pressure after sampling in Hg	-0.6	-0.2	0.0	
Flask temperature °C before sampling	6.1	5.6	6.3	
Flask temperature °C after sampling	11.0			
Barometric pressure before sampling	30.24	→	→	
Barometric pressure after sampling	29.54	✓	✓	
pH adjusted (9-12)	✓	✓	✓	

GCA CORPORATION
Technology Division

GCA/TECHNOLOGY DIVISION

PLANT G.E, N.Y

SAMPLE LOCATION Stack

DATE 12/5/84

RUN TEST #2 - Run # 9

OPERATOR GRAZIANO

W. O. NO.

COMMENTS:

SAMPLE POINT	TIME	(CO_2) READING 1	(O_2) READING 2		(CO) READING 3	
			ACTUAL	NET	ACTUAL	NET
	1330	9.4	13.8	4.4	14.0	.2
		9.4	13.8	4.4	14.0	.2
		9.4	13.8	4.4	14.0	.2

Net O_2 reading = Reading 2 - Reading 1 (Actual)

Net CO reading = Reading 3 - Reading 2 (Actual)

EVACUATED FLASK FIELD DATA

DATE: 12/05/84 W.O. NO. _____

CLIENT: EPA

PLANT: GENERAL ELECTRIC

SAMPLING LOCATION: PORT B STACK

POLLUTANT: NO_x

SAMPLER: W.V.A. HUMPHREYS

FIELD DATA

Run No. UB 10	A	B	C	D
Clock Time	1405	1415	1425	
Flask No./Valve No.	50/41	6/27	24/29	
Volume of Flask Ml.	25	25	25	
Flask pressure before sampling in Hg	-26.5	-24.7	-25.9	
Flask pressure after sampling in Hg	-1.3	-0.6	-0.4	
Flask temperature °C before sampling	4.5	4.8	5.2	
Flask temperature °C after sampling	13.3	→	→	
Barometric pressure before sampling	30.20	→	→	
Barometric pressure after sampling	29.54	→	→	
pH adjusted (9-12)	✓	✓	✓	

GCA CORPORATION
Technology Division

n-1

GCA/TECHNOLOGY DIVISION

PLANT G.E. N.Y.

SAMPLE LOCATION STACK

DATE 12/5/84

RUN TEST #2 - RUN #10

OPERATOR GRAZIANO

W. O. NO.

COMMENTS:

SAMPLE POINT	TIME	(CO_2) READING 1	(O_2) READING 2		(CO) READING 3	
			ACTUAL	NET	ACTUAL	NET
	1400	9.2	13.6	4.4	13.8	.2
		9.2	13.6	4.4	13.8	.2
		9.2	13.6	4.4	13.8	.2

Net O_2 reading = Reading 2 - Reading 1 (Actual)

Net CO reading = Reading 3 - Reading 2 (Actual)

EVACUATED FLASK FIELD DATA

DATE: 2/03/81 W.O. NO. _____

CLIENT: EPA

PLANT: GENERAL ELECTRIC

SAMPLING LOCATION: PORT B STACK

POLLUTANT: NO_x

SAMPLER: HULL, HUMPHREYS

FIELD DATA

Run No. ~~A~~ 11	A	B	C	D
Clock Time	1435	1445	1455	
Flask No./Valve No.	H/20	C/8	G/46	
Volume of Flask Ml.	25	25	25	
Flask pressure before sampling in Hg	-24.9	-25.3	-25.1	
Flask pressure after sampling in Hg	-1.6	-1.4	-1.7	
Flask temperature °~~F~~C before sampling	5.2	5.5	5.5	
Flask temperature °C after sampling	23.4 °C	→	→	
Barometric pressure before sampling	30.20	→	→	
Barometric pressure after sampling	29.54	→	→	
pH adjusted (9-12)	✓	✓	✓	

GCA CORPORATION
Technology Division
GCA

PLANT G.E., N.Y.

SAMPLE LOCATION STACK

DATE 12/5/84

RUN TEST #2 - RUN # 11

OPERATOR GRAZIANO

W. O. NO.

COMMENTS:

SAMPLE POINT	TIME	(CO_2) READING 1	(O_2) READING 2		(CO) READING 3	
			ACTUAL	NET	ACTUAL	NET
	1430	9.6	13.8	4.2	14.0	.2
		9.6	13.8	4.2	14.0	.2
		9.6	13.8	4.2	14.0	.2

Net O_2 reading = Reading 2 - Reading 1 (Actual)

Net CO reading = Reading 3 - Reading 2 (Actual)

EVACUATED FLASK FIELD DATA

DATE: 12/05/84 W.O. NO. _____

CLIENT: EPA

PLANT: GENERAL ELECTRIC

SAMPLING LOCATION: PORT B STACK

POLLUTANT: NOx

SAMPLER: MOLL, HUMPHREYS

FIELD DATA

Run No. 12	A	B	C	D
Clock Time	1505	1515	1525	
Flask No./Valve No.	D/7	F/49	A/2	
Volume of Flask Ml.	25	25	25	
Flask pressure before sampling in Hg	-25.4	-25.3	-24.5	
Flask pressure after sampling in Hg	-1.8	-1.5	-0.5	
Flask temperature °C before sampling	5.2	5.2	4.8	
Flask temperature °C after sampling	20.9	→	→	
Barometric pressure before sampling	30.20	30.20	30.20	
Barometric pressure after sampling	29.54	→	→	
pH adjusted (9-12)	✓	✓	✓	

GCA CORPORATION
Technology Division
GCA

PLANT G.E. N.Y.

SAMPLE LOCATION STACK

DATE 12/5/84

RUN Test #2 - Run #12

OPERATOR GRAZIANO

W. O. NO.

COMMENTS:

SAMPLE POINT	TIME	(CO_2) READING 1	(O_2) READING 2		(CO) READING 3	
			ACTUAL	NET	ACTUAL	NET
	1500	9.4	13.6	4.2	13.8	.2
		9.4	13.6	4.2	13.8	.2
		9.4	13.6	4.2	13.8	.2

Net O_2 reading = Reading 2 - Reading 1 (Actual)

Net CO reading = Reading 3 - Reading 2 (Actual)

GCA CORPORATION
Technology Division
GCA

APPENDIX D

METHOD 7
ANALYTICAL DATA

NO_x ANALYSIS

Contract 1-627-009 Date Analyzed 12-14-84

Analyst V. Howell Date 12-17-84

Results Checked by Ed Mackinnon

Lab No.	Identification	μg NO_2	Comments
42067	Run 4-A	214	RA #1
42068	Run 4-B	220	
42069	Run 4-C	190	
42070	Run 5-A	209	RA #2
42071	Run 5-B	209	
42072	Run 5-C	200	
42073	Run 6-A	200	RA #3
42074	Run 6-B	202	
42075	Run 6-C	238	
42076	Run 7-A	208	RA #4
42077	Run 7-B	194	
42078	Run 7-C	193	
42079	Run 8-A	202	RA #5
42080	Run 8-B	217	
42081	Run 8-C	202	
42082	Run 9-A	191	RA #6
42083	Run 9-B	205	
42084	Run 9-C	209	

Rev. 1/85 GCA/Technology Division

NO_x ANALYSIS

Contract 1-627*009 Date Analyzed 12-14-84

Analyst V. Howell Date 12-17-84

Results Checked by Ed Mackinnon

Lab No.	Identification	μg NO_2	Comments
42085	Run 10-A	234	RA #7
42086	Run 10-B	193	
42087	Run 10-C	201	
42088	Run 11-A	197	RA #8
42089	Run 11-B	185	
42090	Run 11-C	183	
42091	Run 12-A	184	RA #9
42092	Run 12-B	202	
42093	Run 12-C	193	
42094	Run 13-A	207	RA #10
42095	Run 13-B	187	
42096	Run 13-C	171	
42097	Run 14-A	195	RA #11
42098	Run 14-B	179	
42099	Run 14-C	187	
42100	Run 15-A	185	RA #12
42101	Run 15-B	195	
42102	Run 15-C	187	

Rev. 1/85 GCA/Technology Division

NO_x ANALYSIS

Contract 1-627-009 Date Analyzed 12-14-84

Analyst V. Howell Date 12-17-84

Results Checked by Ed Mackinnon

Lab No.	Identification	μg NO_2	Comments
42103	Blank Run 1-9	<2.00	
42104	Blank Run 9-12	<2.00	

Rev. 1/85 GCA/Technology Division

APPENDIX E

REFERENCE METHOD
DATA REDUCTION

Method 7 - Data Reduction Sheet

For TI-59 Prog Card 1

Source/Run# 1 GENERAL ELECTRIC DAY 340

Date 12/26/84

Data Input/Check D. Moll

For Calculating:

Vsc, NO_2 lb/dscf, NO_2 gm/dscm, NO_2 ppm, Emiss (lb/10^6 BTU), Emiss (ng/J)

					A	B	C
1)	Volume of flask and valve	ml	(VF)	=	1992	2011	2040
2)	Final abs. Pressure of flask	"Hg	(Pf)	=	30.04	29.64	29.74
3)	Final abs. Temp. of flask	°F	(Tf)	=	57.6	57.6	57.6
4)	Initial abs. Pressure of flask	"Hg	(Pi)	=	5.54	3.84	5.64
5)	Initial abs. Temp. of flask	°F	(Ti)	=	38.3	38.3	38.3
6)	Total Mass of NO_2 in Sample	µg	(M)	=	214	220	190
7)	F-Factor (dscf/10^6 BTU)			=	8710	8710	8710
8)	Percent Oxygen			=	4.6	4.6	4.6

RUN 1A

VSC
1628.65

NO2 DRY LB/CU.FT.
2.203-06

NO2-PPM
68.67

EMISS(LB/MBTU) =
0.0916

EMISS(NG/J) =
38.39

RUN 1B

VSC
1736.87

NO2 DRY LB/CU.FT.
2.909-06

NO2-PPM
66.19

EMISS(LB/MBTU) =
0.0883

EMISS(NG/J) =
37.97

RUN 1C

VSC
1640.65

NO2 DRY LB/CU.FT.
2.230-06

NO2-PPM
60.52

EMISS(LB/MBTU) =
0.0807

EMISS(NG/J) =
34.72

GCA

Method 7 - Data Reduction Sheet

For TI-59 Prog Card 1

Source/Run# 2 GENERAL ELECTRIC DAY 340

Date 12-26-84

Data Input/Check D. Moll

For Calculating:

Vsc, NO_2 lb/dscf, NO_2 gm/dscm, NO_2 ppm, Emiss (lb/10^6 BTU), Emiss (ng/J)

					A	B	C
1)	Volume of flask and valve	ml	(VF)	=	2009	1994	1989
2)	Final abs. Pressure of flask	"Hg	(Pf)	=	28.14	29.94	28.04
3)	Final abs. Temp. of flask	°F	(Tf)	=	57.0	57.0	57.0
4)	Initial abs. Pressure of flask	"Hg	(Pi)	=	4.94	4.54	5.34
5)	Initial abs. Temp. of flask	°F	(Ti)	=	38.8	38.8	38.8
6)	Total Mass of NO_2 in Sample	µg	(M)	=	209	209	200
7)	F-Factor (dscf/10^6 BTU)			=	8710	8710	8710
8)	Percent Oxygen			=	4.4	4.4	4.4

RUN 2A

VSC
1558.92

NO2 DRY LB/CU.FT.
8.370-06

NO2-PPM
70.06

EMISS(LB/MBTU) =
0.0923

EMISS(NG/J) =
39.71

RUN 2B

VSC
1695.98

NO2 DRY LB/CU.FT.
7.693-06

NO2-PPM
64.40

EMISS(LB/MBTU) =
0.0849

EMISS(NG/J) =
36.50

RUN 2C

VSC
1508.71

NO2 DRY LB/CU.FT.
8.276-06

NO2-PPM
69.27

EMISS(LB/MBTU) =
0.0913

EMISS(NG/J) =
39.26

GCA CORPORATION
Technology Division

Method 7 - Data Reduction Sheet

For TI-59 Prog Card 1

Source/Run# 3 GENERAL ELECTRIC DAY 340

Date 12-26-84

Data Input/Check D. Noll

For Calculating:

Vsc, NO_2 lb/dscf, NO_2 gm/dscm, NO_2 ppm, Emiss (lb/10^6 BTU), Emiss (ng/J)

					A	B	C
1)	Volume of flask and valve	ml	(VF)	=	1987	1999	1994
2)	Final abs. Pressure of flask	"Hg	(Pf)	=	28.24	28.34	28.14
3)	Final abs. Temp. of flask	°F	(Tf)	=	61.5	61.5	61.5
4)	Initial abs. Pressure of flask	"Hg	(Pi)	=	4.94	5.14	5.34
5)	Initial abs. Temp. of flask	°F	(Ti)	=	37.9	38.3	38.7
6)	Total Mass of NO_2 in Sample	µg	(M)	=	200	202	238
7)	F-Factor (dscf/10^6 BTU)			=	8710	8710	8710
8)	Percent Oxygen			=	4.4	4.4	4.4

RUN 3A

VSC
1531.39

NO2 DRY LB/CU.FT.
3.153-06

NO2-PPM
68.25

EMISS(LB/MBTU)=
0.0900

EMISS(NG/J)=
38.68

RUN 3B

VSC
1533.73

NO2 DRY LB/CU.FT.
3.222-06

NO2-PPM
68.83

EMISS(LB/MBTU)=
0.0907

EMISS(NG/J)=
39.01

RUN 3C

VSC
1502.88

NO2 DRY LB/CU.FT.
9.887-06

NO2-PPM
82.76

EMISS(LB/MBTU)=
0.1091

EMISS(NG/J)=
46.90

GCA CORPORATION
Technology Division
GCA

Method 7 - Data Reduction Sheet

For TI-59 Prog Card 1

Source/Run# 4 GENERAL ELECTRIC DAY 340

Date 12-26-84

Data Input/Check D. Moll

For Calculating:

Vsc, NO_2 lb/dscf, NO_2 gm/dscm, NO_2 ppm, Emiss (lb/10^6 BTU), Emiss (ng/J)

					A	B	C
1)	Volume of flask and valve	ml	(VF)	=	2054	2043	1988
2)	Final abs. Pressure of flask	"Hg	(Pf)	=	28.74	27.94	29.34
3)	Final abs. Temp. of flask	°F	(Tf)	=	63.3	63.3	63.3
4)	Initial abs. Pressure of flask	"Hg	(Pi)	=	5.14	5.34	5.74
5)	Initial abs. Temp. of flask	°F	(Ti)	=	38.5	38.1	39.0
6)	Total Mass of NO_2 in Sample	µg	(M)	=	208	194	193
7)	F-Factor (dscf/10^6 BTU)			=	8710	8710	8710
8)	Percent Oxygen			=	4.4	4.4	4.4

RUN 4A

VSC
1597.29

NO2 DRY LB/CU.FT.
8.130-06

NO2-PPM
68.05

EMISS (LB/MBTU) =
0.0897

EMISS (NG/J) =
38.57

RUN 4B

VSC
1519.60

NO2 DRY LB/CU.FT.
7.970-06

NO2-PPM
66.71

EMISS (LB/MBTU) =
0.0879

EMISS (NG/J) =
37.81

RUN 4C

VSC
1543.76

NO2 DRY LB/CU.FT.
7.805-06

NO2-PPM
65.33

EMISS (LB/MBTU) =
0.0861

EMISS (NG/J) =
37.03

GCA CORPORATION
Technology Division

Method 7 - Data Reduction Sheet

For TI-59 Prog Card 1

Source/Run# 5 GENERAL ELECTRIC DAY 340

Date 12-26-84

Data Input/Check D. [illegible]

For Calculating:

Vsc, NO_2 lb/dscf, NO_2 gm/dscm, NO_2 ppm, Emiss (lb/10^6 BTU), Emiss (ng/J)

				A	B	C
1)	Volume of flask and valve	ml	(VF) =	2034	2084	2058
2)	Final abs. Pressure of flask	"Hg	(Pf) =	28.24	27.84	30.44
3)	Final abs. Temp. of flask	°F	(Tf) =	59.5	59.5	59.5
4)	Initial abs. Pressure of flask	"Hg	(Pi) =	5.34	3.04	5.14
5)	Initial abs. Temp. of flask	°F	(Ti) =	38.8	38.3	38.3
6)	Total Mass of NO_2 in Sample	µg	(M) =	202	217	202
7)	F-Factor (dscf/10^6 BTU)		=	8710	8710	8710
8)	Percent Oxygen		=	4.4	4.4	4.4

RUN 5A

VSC
1540.05

NO2 DRY LB/CU.FT.
8.184-06

NO2-PPM
63.51

EMISS(LB/MBTU) =
0.0903

EMISS(NG/J) =
38.83

RUN 5B

VSC
1725.54

NO2 DRY LB/CU.FT.
7.851-06

NO2-PPM
65.72

EMISS(LB/MBTU) =
0.0866

EMISS(NG/J) =
37.25

RUN 5C

VSC
1732.11

NO2 DRY LB/CU.FT.
7.281-06

NO2-PPM
60.94

EMISS(LB/MBTU) =
0.0803

EMISS(NG/J) =
34.54

GCA

Method 7 - Data Reduction Sheet

For TI-59 Prog Card 1

Source/Run# 6 GENERAL ELECTRIC DAY 340

Date 12-26-84

Data Input/Check J. Noll

For Calculating:

Vsc, NO_2 lb/dscf, NO_2 gm/dscm, NO_2 ppm, Emiss (lb/10^6 BTU), Emiss (ng/J)

					A	B	C
1)	Volume of flask and valve	ml	(VF)	=	1968	2055	2065
2)	Final abs. Pressure of flask	"Hg	(Pf)	=	28.44	28.54	28.54
3)	Final abs. Temp. of flask	°F	(Tf)	=	57.9	57.9	57.9
4)	Initial abs. Pressure of flask	"Hg	(Pi)	=	4.94	5.74	5.24
5)	Initial abs. Temp. of flask	°F	(Ti)	=	40.1	38.8	41.4
6)	Total Mass of NO_2 in Sample	µg	(M)	=	191	205	209
7)	F-Factor (dscf/10^6 BTU)			=	8710	8710	8710
8)	Percent Oxygen			=	4.4	4.4	4.4

RUN 6A	RUN 6B	RUN 6C
VSC 1544.21	VSC 1561.89	VSC 1607.63
NO2 DRY LB/CU.FT. 7.722-06	NO2 DRY LB/CU.FT. 8.194-06	NO2 DRY LB/CU.FT. 8.116-06
NO2-PPM 64.64	NO2-PPM 68.59	NO2-PPM 67.94
EMISS(LB/MBTU)= 0.0852	EMISS(LB/MBTU)= 0.0904	EMISS(LB/MBTU)= 0.0895
EMISS(NG/J)= 35.53	EMISS(NG/J)= 38.87	EMISS(NG/J)= 38.50

GCA CORPORATION Technology Division

Method 7 - Data Reduction Sheet

For TI-59 Prog Card 1

Source/Run# 7 GENERAL ELECTRIC DAY 340

Date 12-26-84

Data Input/Check D. Moll

For Calculating:

Vsc, NO_2 lb/dscf, NO_2 gm/dscm, NO_2 ppm, Emiss (lb/10^6 BTU), Emiss (ng/J)

					A	B	C
1)	Volume of flask and valve	ml	(VF)	=	2056	1992	2056
2)	Final abs. Pressure of flask	"Hg	(Pf)	=	30.84	29.34	28.84
3)	Final abs. Temp. of flask	°F	(Tf)	=	55.9	55.9	55.9
4)	Initial abs. Pressure of flask	"Hg	(Pi)	=	4.84	5.64	5.54
5)	Initial abs. Temp. of flask	°F	(Ti)	=	41.5	40.3	40.8
6)	Total Mass of NO_2 in Sample	µg	(M)	=	234	193	201
7)	F-Factor (dscf/10^6 BTU)			=	8710	8710	8710
8)	Percent Oxygen			=	4.4	4.4	4.4

RUN 7A

VSC
1796.65

NO2 DRY LB/CU.FT.
8.101-06

NO2-PPM
68.06

EMISS(LB/MBTU)=
0.0897

EMISS(NG/J)=
38.57

RUN 7B

VSC
1582.80

NO2 DRY LB/CU.FT.
7.612-06

NO2-PPM
63.72

EMISS(LB/MBTU)=
0.0840

EMISS(NG/J)=
36.11

RUN 7C

VSC
1607.12

NO2 DRY LB/CU.FT.
7.908-06

NO2-PPM
65.36

EMISS(LB/MBTU)=
0.0861

EMISS(NG/J)=
37.04

GCA CORPORATION Technology Division

Method 7 - Data Reduction Sheet

For TI-59 Prog Card 1

Source/Run# 8 GENERAL ELECTRIC DAY 340

Date 12-26-84

Data Input/Check D. Moll

For Calculating:

Vsc, NO_2 lb/dscf, NO_2 gm/dscm, NO_2 ppm, Emiss (lb/10^6 BTU), Emiss (ng/J)

					A	B	C
1)	Volume of flask and valve	ml	(VF)	=	2021	1980	1992
2)	Final abs. Pressure of flask	"Hg	(Pf)	=	28.14	27.74	27.94
3)	Final abs. Temp. of flask	°F	(Tf)	=	55.8	55.8	55.8
4)	Initial abs. Pressure of flask	"Hg	(Pi)	=	5.74	4.94	5.54
5)	Initial abs. Temp. of flask	°F	(Ti)	=	41.9	41.4	42.3
6)	Total Mass of NO_2 in Sample	µg	(M)	=	197	185	183
7)	F-Factor (dscf/10^6 BTU)			=	8710	8710	8710
8)	Percent Oxygen			=	4.6	4.6	4.6

RUN 8A

VSC
1513.82

NO2 DRY LB/CU.FT.
3.090-06

NO2-PPM
67.78

EMISS(LB/MBTU) =
0.0[illegible]

EMISS(NG/J) =
38.89

RUN 8B

VSC
1515.32

NO2 DRY LB/CU.FT.
7.621-06

NO2-PPM
63.79

EMISS(LB/MBTU) =
0.0851

EMISS(NG/J) =
36.60

RUN 8C

VSC
1497.43

NO2 DRY LB/CU.FT.
7.630-06

NO2-PPM
63.86

EMISS(LB/MBTU) =
0.0852

EMISS(NG/J) =
36.64

Method 7 - Data Reduction Sheet

For TI-59 Prog Card 1

Source/Run# 9 GENERAL ELECTRIC DAY 340

Date 12-26-84

Data Input/Check D. Moll

For Calculating:

Vsc, NO_2 lb/dscf, NO_2 gm/dscm, NO_2 ppm, Emiss (lb/10^6 BTU), Emiss (ng/J)

					A	B	C
1)	Volume of flask and valve	ml	(VF)	=	2044	2067	1998
2)	Final abs. Pressure of flask	"Hg	(Pf)	=	28.94	29.34	29.54
3)	Final abs. Temp. of flask	°F	(Tf)	=	51.8	51.8	51.8
4)	Initial abs. Pressure of flask	"Hg	(Pi)	=	5.14	4.24	4.74
5)	Initial abs. Temp. of flask	°F	(Ti)	=	43.0	42.1	43.3
6)	Total Mass of NO_2 in Sample	µg	(M)	=	184	202	193
7)	F-Factor (dscf/10^6 BTU)			=	8710	8710	8710
8)	Percent Oxygen			=	4.4	4.4	4.4

[redacted] RUN 9A

VSC
1650.60

NO2 DRY LB/CU.FT.
6.959-06

NO2-PPM
58.25

EMISS(LB/MBTU) =
0.0768

EMISS(NG/J) =
33.02

[redacted] RUN 9B

VSC
1761.50

NO2 DRY LB/CU.FT.
7.159-06

NO2-PPM
59.93

EMISS(LB/MBTU) =
0.0790

EMISS(NG/J) =
33.96

[redacted]

[redacted] RUN 9C

VSC
1681.69

NO2 DRY LB/CU.FT.
7.165-06

NO2-PPM
59.97

EMISS(LB/MBTU) =
0.0790

EMISS(NG/J) =
33.99

[redacted]

GCA CORPORATION
Technology Division
GCA

Method 7 - Data Reduction Sheet

For TI-59 Prog Card 1

Source/Run# 10 GENERAL ELECTRIC DAY 340

Date 12-26-84

Data Input/Check J. Noll

For Calculating:

Vsc, NO_2 lb/dscf, NO_2 gm/dscm, NO_2 ppm, Emiss (lb/10^6 BTU), Emiss (ng/J)

				A	B	C
1)	Volume of flask and valve	ml	(VF) =	2057	2007	1996
2)	Final abs. Pressure of flask	"Hg	(Pf) =	28.34	28.94	29.14
3)	Final abs. Temp. of flask	°F	(Tf) =	55.9	55.9	55.9
4)	Initial abs. Pressure of flask	"Hg	(Pi) =	3.7	5.5	4.8
5)	Initial abs. Temp. of flask	°F	(Ti) =	40.1	40.6	41.4
6)	Total Mass of NO_2 in Sample	µg	(M) =	207	187	171
7)	F-Factor (dscf/10^6 BTU)		=	8710	8710	8710
8)	Percent Oxygen		=	4.4	4.4	4.4

RUN 10A

VSC
1704.54

NO2 DRY LB/CU.FT.
7.582-06

NO2-PPM
63.46

EMISS(LB/MBTU)=
0.0896

EMISS(NG/J)=
35.97

RUN 10B

VSC
1577.77

NO2 DRY LB/CU.FT.
7.399-06

NO2-PPM
61.94

EMISS(LB/MBTU)=
0.0816

EMISS(NG/J)=
35.10

RUN 10C

VSC
1631.66

NO2 DRY LB/CU.FT.
6.543-06

NO2-PPM
54.77

EMISS(LB/MBTU)=
0.0722

EMISS(NG/J)=
31.04

GCA CORPORATION
Technology Division
GCA

Method 7 - Data Reduction Sheet

For TI-59 Prog Card 1

Source/Run# 11 GENERAL ELECTRIC DAY 340

Date 12-26-84

Data Input/Check D. Moll

For Calculating:

Vsc, NO_2 lb/dscf, NO_2 gm/dscm, NO_2 ppm, Emiss (lb/10^6 BTU), Emiss (ng/J)

					A	B	C
1)	Volume of flask and valve	ml	(VF)	=	2115	2067	2090
2)	Final abs. Pressure of flask	"Hg	(Pf)	=	27.94	28.14	27.84
3)	Final abs. Temp. of flask	°F	(Tf)	=	74.1	74.1	74.1
4)	Initial abs. Pressure of flask	"Hg	(Pi)	=	5.30	4.90	5.10
5)	Initial abs. Temp. of flask	°F	(Ti)	=	41.4	41.9	41.9
6)	Total Mass of NO_2 in Sample	µg	(M)	=	195	179	187
7)	F-Factor (dscf/10^6 BTU)			=	8710	8710	8710
8)	Percent Oxygen			=	4.2	4.2	4.2

RUN 11A

VSC
1539.54

NO2 DRY LB/CU.FT.
7.907-06

NO2-PPM
66.19

EMISS(LB/MBTU)=
0.0862

EMISS(NG/J)=
37.06

RUN 11B

VSC
1546.77

NO2 DRY LB/CU.FT.
7.725-06

NO2-PPM
60.48

EMISS(LB/MBTU)=
0.0788

EMISS(NG/J)=
33.86

RUN 11C

VSC
1529.21

NO2 DRY LB/CU.FT.
7.634-06

NO2-PPM
63.90

EMISS(LB/MBTU)=
0.0832

EMISS(NG/J)=
35.78

Method 7 - Data Reduction Sheet

For TI-59 Prog Card 1

Source/Run# 12 GENERAL ELECTRIC DAY 340

Date 12-26-84

Data Input/Check D. Hall

For Calculating:

Vsc, NO_2 lb/dscf, NO_2 gm/dscm, NO_2 ppm, Emiss (lb/10^6 BTU), Emiss (ng/J)

					A	B	C
1)	Volume of flask and valve	ml	(VF)	=	2067	2045	2040
2)	Final abs. Pressure of flask	"Hg	(Pf)	=	27.74	28.04	29.04
3)	Final abs. Temp. of flask	°F	(Tf)	=	69.6	69.6	69.6
4)	Initial abs. Pressure of flask	"Hg	(Pi)	=	4.8	4.9	5.7
5)	Initial abs. Temp. of flask	°F	(Ti)	=	41.4	41.4	40.6
6)	Total Mass of NO_2 in Sample	µg	(M)	=	185	195	187
7)	F-Factor (dscf/10^6 BTU)			=	8710	8710	8710
8)	Percent Oxygen			=	4.2	4.2	4.2

RUN 12A

VSC
1542.53

NO2 DRY LB/CU.FT.
7.487-06

NO2-PPM
62.67

EMISS(LB/MBTU)=
0.0816

EMISS(NG/J)=
35.10

RUN 12B

VSC
1538.99

NO2 DRY LB/CU.FT.
7.910-06

NO2-PPM
66.21

EMISS(LB/MBTU)=
0.0862

EMISS(NG/J)=
37.08

RUN 12C

VSC
1544.94

NO2 DRY LB/CU.FT.
7.557-06

NO2-PPM
63.25

EMISS(LB/MBTU)=
0.0824

EMISS(NG/J)=
35.42

GCA CORPORATION
Technology Division

APPENDIX F

RELATIVE ACCURACY CALCULATIONS

GENERAL ELECTRIC

RUN	NOx PPM	AVG	EMISSIONS NG/J	AVG	RUN	Ppm NOx	AVG	EMISSIONS NG/J	AVG
1A	68.67		39.39		7A	68.06		38.57	
1B	66.19	65.13	37.97	37.36	7B	63.72	65.71	36.11	37.24
1C	60.52		34.72		7C	65.36		37.04	
2A	70.06		39.71		8A	67.78		38.89	
2B	64.40	67.91	36.50	38.49	8B	63.79	65.14	36.60	37.38
2C	69.27		39.26		8C	63.86		36.64	
3A	68.25		38.68		9A	58.25		33.02	
3B	68.83	73.28	39.01	41.53	9B	59.93	59.38	33.96	33.66
3C	82.76		46.90		9C	59.97		33.99	
4A	68.05		38.57		10A	63.46		35.97	
4B	66.71	66.70	37.81	37.80	10B	61.94	60.06	35.10	34.04
4C	65.33		37.03		10C	54.77		31.04	
5A	68.51		38.83		11A	66.19		37.06	
5B	65.72	65.06	37.25	36.87	11B	60.48	63.52	33.86	35.57
5C	60.94		34.54		11C	63.90		35.78	
6A	64.64		36.63		12A	62.67		35.10	
6B	68.59	67.06	38.87	38.00	12B	66.21	64.04	37.08	35.87
6C	67.94		38.50		12C	63.25		35.42	

DAY 340

RUN	TIME	B METHOD NO_x ppm	A MONITOR NO_x ppm	B METHOD NO_x NG/J	A MONITOR NO_x NG/J	B METHOD % O_2	A MONITOR % O_2	B METHOD % CO_2	A MONITOR % CO_2
1	0930-1000	65.1	66	37.4	39	4.6	4.3	9.0	9.25
2	1000-1030	67.9	66.5	38.5	39	4.4	4.4	9.4	9.25
3	1030-1100	73.3	67	41.5	39	4.4	4.3	9.4	9.35
4	1100-1130	66.7	68	37.8	40	4.4	4.4	9.2	9.35
5	1130-1200	65.1	69	36.9	40	4.4	4.25	9.4	9.5
6	1200-1230	67.1	68.5	38.0	40	4.4	4.3	9.2	9.4
7	1230-1300	65.7	69	37.2	40	4.4	4.3	9.4	9.5
8	1300-1330	65.1	69.5	37.4	40.5	4.6	4.3	9.2	9.4
9	1330-1400	59.4	69	33.7	40.5	4.4	4.35	9.4	9.25
10	1400-1430	60.1	69	34.0	40	4.4	4.25	9.2	9.05
11	1430-1500	63.5	67.5	35.6	40	4.2	4.3	9.6	8.95
12	1500-1530	64.0	68	35.9	40	4.2	4.25	9.4	9.15
		A-B DIFF	$(DIFF)^2$	A-B DIFF	$(DIFF)^2$	A-B DIFF	$(DIFF)^2$	A-B DIFF	$(DIFF)^2$
1		0.9	0.81	1.6	2.56	-0.3	0.09	0.25	0.0625
2		-1.4	1.96	0.5	0.25	0.0	0.00	-0.15	0.0225
3		-6.3	X	-2.5	X	-0.1	0.01	0.05	X
4		1.3	1.69	2.2	4.84	0.0	0.00	0.15	0.0225
5		3.9	15.21	3.1	9.61	-0.15	0.0225	0.10	0.01
6		1.4	1.96	2.0	4.0	-0.1	0.01	0.20	0.04
7		3.3	10.89	2.8	7.84	-0.1	0.01	0.10	0.01
8		4.4	19.36	3.1	9.61	-0.3	0.09	0.20	0.04
9		9.6	X	6.8	X	-0.05	X	X	X
10		8.9	X	6.0	X	-0.15	X	X	X
11		4.0	16.0	4.4	19.36	0.1	0.01	-0.65	0.4225
12		4.0	16.0	4.1	16.81	0.05	0.0025	-0.25	0.0625

GCA/TECHNOLOGY DIVISION

BURLINGTON ROAD, BEDFORD, MASSACHUSETTS 01730 / PHONE: 617 275-9000

SHEET 1 OF 4

BY

DATE

CH'K BY

DATE CH'K.

S'K CH'K. BY

JOB NO.

PROJECT GENERAL ELECTRIC - NOx ppm

SUBJECT Relative Accuracy Calculations Source

SO_2 ppm SO_2 Sys NO_x ppm NO_x Sys $CO_2/O_2/H_2O$%

Test No.	Runs	B Reference Method	A Monitor	A-B Difference	(Difference)^2 (D^2)
1	1	65.1	66	0.9	0.81
2	2	67.9	66.5	-1.4	1.96
3	4	66.7	68.0	1.3	1.69
4	5	65.1	69	3.9	15.21
5	6	67.1	68.5	1.4	1.96
6	7	65.7	69	3.3	10.89
7	8	65.1	69.5	4.4	19.36
8	11	63.5	67.5	4.0	16.0
9	12	64.0	68	4.0	16.0
n		9	9	9	9
Σ RM		590.2			
Σ M			612		
Σ D				21.8	
Σ (D^2)					83.88
n [Σ(D)^2]					754.92
$\overline{RM}$		65.6			
$\overline{M}$			68		
$\overline{D}$				2.4	
[ΣD]^2				475.2	

$\overline{RM} = \frac{\Sigma RM}{9} = \frac{\quad}{9}$

$\overline{RM}$ = 65.6

$\overline{D} = \frac{\Sigma D}{9} = \frac{\quad}{9}$

$\overline{D}$ = 2.4

$\overline{M} = \frac{\Sigma M}{9} = \frac{\quad}{9}$

$\overline{M}$ = 68

$$CI = \frac{t_{.975}}{n\sqrt{(n-1)}} \left(\sqrt{n\,[\Sigma(D^2] - [\Sigma D]^2}\right)$$

$$CI = \frac{2.306}{9\sqrt{8}} \left(\sqrt{(754.92) - (475.2)}\right)$$

$$CI = 0.0906\,(16.72)$$

$$CI = 1.52$$

$$RA = \frac{(|\overline{D}| + CI)}{\overline{RM}} \times 100$$

$$RA = \frac{(2.4) + (1.52)}{(65.6)} \times 100$$

$$RA = 5.98\%$$

Relative accuracy calculations.

GCA/TECHNOLOGY DIVISION

BURLINGTON ROAD, BEDFORD, MASSACHUSETTS 01730 / PHONE: 617-275-9000

SHEET 2 OF 4

BY

DATE

CH'K BY

DATE CH'K.

B'K. CH'K BY

JOB NO.

PROJECT GENERAL ELECTRIC - NO_x NG/J

SUBJECT Relative Accuracy Calculations Source

SO_2 ppm SO_2 Sys NO_x ppm (NO_x Sys) $CO_2/O_2/H_2O$%

Test No.	Runs	Reference Method	Monitor	Difference	(Difference)^2 (D^2)
1	1	37.4	39	1.6	2.56
2	2	38.5	39	0.5	0.25
3	4	37.8	40	2.2	4.84
4	5	36.9	40	3.1	9.61
5	6	38.0	40	2.0	4.0
6	7	37.2	40	2.8	7.84
7	8	37.4	40.5	3.1	9.61
8	11	35.6	40	4.4	19.36
9	12	35.9	40	4.1	16.81
n		9	9	9	9
Σ RM		334.7			
Σ M			358.5		
Σ D				23.8	
Σ (D^2)					74.88
n [Σ(D)^2]					673.92
$\overline{RM}$		37.2			
$\overline{M}$			39.8		
$\overline{D}$				2.64	
[ΣD]^2				566.4	

$\overline{RM} = \frac{\Sigma RM}{9} = \frac{\quad}{9}$

$\overline{RM}$ = 37.2

$\overline{D} = \frac{\Sigma D}{9} = \frac{\quad}{9}$

$\overline{D}$ = 2.64

$\overline{M} = \frac{\Sigma M}{9} = \frac{\quad}{9}$

$\overline{M}$ = 39.8

$$CI = \frac{t_{.975}}{n\sqrt{(n-1)}}\left(\sqrt{n\,[\Sigma(D^2) - [\Sigma D]^2}\right)$$

$$CI = \frac{2.306}{9\sqrt{8}}\left(\sqrt{(673.92) - (358.5)}\right)$$

CI = 0.0906 (17.76)

CI = 1.61

$$RA = \frac{(|\overline{D}| + CI)}{\overline{RM}} \times 100$$

$$RA = \frac{(1.61) + (2.64)}{(37.2)} \times 100$$

RA = 11.42%

Relative accuracy calculations.

GCA/TECHNOLOGY DIVISION

BURLINGTON ROAD, BEDFORD, MASSACHUSETTS 01730 / PHONE: 617 275-9000

SHEET 3 OF 4

BY

DATE

CH'K BY

DATE CH'K.

B'K. CH'K. BY

JOB NO.

PROJECT GENERAL ELECTRIC - % O_2

SUBJECT Relative Accuracy Calculations Source

SO_2 ppm SO_2 Sys NO_x ppm NO_x Sys CO_2 O_2 H_2O%

Test No.	Run	Reference Method	Monitor	Difference	(Difference)^2 (D^2)
1	1	4.6	4.3	-0.3	0.09
2	2	4.4	4.4	0.0	0.00
3	4	4.4	4.4	0.0	0.00
4	5	4.4	4.25	-0.15	0.0225
5	6	4.4	4.3	-0.10	0.01
6	7	4.4	4.3	-0.10	0.01
7	8	4.6	4.3	-0.3	0.09
8	11	4.2	4.3	0.1	0.01
9	12	4.2	4.25	0.05	0.0025
n		9	9	9	9
Σ RM		39.6			
Σ M			38.8		
Σ D				-0.8	
Σ (D^2)					0.235
n [Σ(D)^2]					2.115
$\overline{RM}$		4.4			
$\overline{M}$			4.31		
$\overline{D}$				-0.089	
[ΣD]^2				0.64	

$\overline{RM} = \frac{\Sigma RM}{9} = \frac{\quad}{9}$

$\overline{RM}$ = 4.4

$\overline{D} = \frac{\Sigma D}{9} = \frac{\quad}{9}$

$\overline{D}$ = 0.089

$\overline{M} = \frac{\Sigma M}{9} = \frac{\quad}{9}$

$\overline{M}$ = 4.31

$$CI = \frac{t_{.975}}{n\sqrt{(n-1)}} \left(\sqrt{n\,[\Sigma(D^2] - [\Sigma D]^2}\right)$$

$$CI = \frac{2.306}{9\sqrt{8}} \left(\sqrt{(2.115) - (0.64)}\right)$$

$$CI = 0.0906\,(1.475)$$

$$CI = 0.134$$

$$RA = \frac{(|\overline{D}| + CI)}{\overline{RM}} \times 100$$

$$RA = \frac{(0.089) + (0.134)}{(4.4)} \times 100$$

RA = 5.06% OR 0.22% O_2

Relative accuracy calculations.

GCA/TECHNOLOGY DIVISION

BURLINGTON ROAD, BEDFORD, MASSACHUSETTS 01730 / PHONE: 617 275 9000

SHEET 4 OF 4

BY

DATE

CH'K BY

DATE CH'K.

B'K. CH'K BY

JOB NO.

PROJECT GENERAL ELECTRIC – % CO_2

SUBJECT Relative Accuracy Calculations Source

SO_2 ppm SO_2 Sys NO_x ppm NO_x Sys $CO_2/O_2/H_2O$%

Test No.		Reference Method	Monitor	Difference	(Difference)^2 (D^2)
1	1	9.0	9.25	0.25	0.0625
2	2	9.4	9.25	-0.15	0.0225
3	4	9.2	9.35	0.15	0.0225
4	5	9.4	9.5	0.10	0.01
5	6	9.2	9.4	0.20	0.04
6	7	9.4	9.5	0.10	0.01
7	8	9.2	9.4	0.20	0.04
8	11	9.6	8.95	-0.65	0.4225
9	12	9.4	9.15	-0.25	0.0625
n		9	9	9	9
Σ RM		83.8			
Σ M			83.75		
Σ D				-0.05	
Σ (D^2)					0.6925
n [Σ(D)^2]					6.2325
$\overline{RM}$		9.31			
$\overline{M}$			9.3		
$\overline{D}$				0.0055	
[ΣD]^2				0.0025	

$\overline{RM} = \frac{\Sigma RM}{9} = \frac{\quad}{9}$

$\overline{RM}$ = 9.31

$\overline{D} = \frac{\Sigma D}{9} = \frac{\quad}{9}$

$\overline{D}$ = -0.0055

$\overline{M} = \frac{\Sigma M}{9} = \frac{\quad}{9}$

$\overline{M}$ = 9.3

$$CI = \frac{t_{.975}}{n\sqrt{(n-1)}} \left(\sqrt{n\,[\Sigma(D^2] - [\Sigma D]^2}\right)$$

$$CI = \frac{2.306}{9\sqrt{8}} \left(\sqrt{(6.2325) - (0.0025)}\right)$$

$$CI = 0.0906\ (\ 2.496\ )$$

$$CI = 0.226$$

$$RA = \frac{(|\overline{D}| + CI)}{\overline{RM}} \times 100$$

$$RA = \frac{(0.0055 + (0.226)}{(9.31)} \times 100$$

RA = 2.49 % OR 0.232 % CO_2

Relative accuracy calculations.

6

APPENDIX G

EMISSION TEST PARTICIPANTS

A list of the personnel in the boiler emission test program is summarized below:

EPA TASK MANAGERS

1. Dennis P. Holzschuh

2. Charlie Sedman

GENERAL ELECTRIC REPRESENTATIVE

1. Alan North

GCA TEST PARTICIPANTS

1. Edward Peduto, Project Manager

2. Richard Graziano, Test Team Leader

3. David Moll, Test Team Member

4. Thomas Sylvia, Test Team Member

5. Sharon Humphreys, Test Team Member

6. Michael White, QC Coordinator