United States
Environmental Protection
Agency

Office of Air Quality
Planning and Standards
Research Triangle Park, NC 27711

EMB Report 93-UTL-3
May 1993

Air

Electric Utility Gas Fired Boiler Emission Test Report

Houston Lighting and Power Company
Greens Bayou Unit - 5

Houston, Texas

GAS-FIRED BOILER EMISSION TEST REPORT

HOUSTON LIGHTING AND POWER COMPANY
GREENS BAYOU UNIT 5
HOUSTON, TEXAS

EPA Contract No. 68D20163
Work Assignment No. I-34

Prepared by:

Research Division
Entropy, Inc.
Post Office Box 12291
Research Triangle Park, North Carolina 27709

Prepared for:

Lori Lay
U. S. Environmental Protection Agency
Emissions Measurement Branch
Research Triangle Park, North Carolina 27711

May 27, 1994

DISCLAIMER

This document was prepared by Entropy, Inc. under EPA Contract No. 68D20163, Work Assignment No. I-34. This document has not been reviewed by the U. S. Environmental Protection Agency.

The opinions, conclusions, and recommendations expressed herein are those of the authors, and do not necessarily represent those of EPA.

Mention of specific trade names or products within this report does not constitute endorsement by EPA or Entropy, Inc.

TABLE OF CONTENTS

1.0 INTRODUCTION 1
1.1 BACKGROUND 1
1.2 DESCRIPTION OF THE PROJECT 1
1.3 PROJECT ORGANIZATION 3

2.0 PROCESS DESCRIPTION AND SAMPLE POINT LOCATIONS 4
2.1 FACILITY DESCRIPTION 4
2.2 AIR POLLUTION CONTROL DEVICES 5
2.2.1 Nitrogen Oxide (NO_x) Control 5
2.2.2 Sulfur Dioxide (SO_2) Control 5
2.2.3 Particulate Control 5
2.3 SAMPLE POINT LOCATION, UNIT 5 EXHAUST STACK 7

3.0 SUMMARY AND DISCUSSION OF RESULTS 9
3.1 OBJECTIVES AND TEST MATRIX 9

3.2 FIELD TEST CHANGES AND PROBLEMS 10
3.3 SUMMARY OF RESULTS 11
3.3.1 FTIR Results 11
3.3.1.1 Gas Phase Results 11
3.3.1.2 Sample Concentration Results 12
3.3.2 Instrumental and Manual Test Results 26
3.3.3 Process Results 31
3.3.3.1 Operating Conditions 31
3.3.3.2 Problems and/or Variations During Testing . . 31

4.0 SAMPLING AND ANALYTICAL PROCEDURES 39
4.1 EXTRACTIVE SYSTEM FOR DIRECT GAS PHASE ANALYSIS 39
4.1.1 Sampling System 39
4.1.2 Analytical System 40
4.1.3 Sample Collection Procedure 40
4.2 SAMPLE CONCENTRATION 43
4.2.1 Sampling System 43
4.2.2 Analytical System 43
4.2.3 Sample Collection Procedure 45
4.3 CONTINUOUS EMISSIONS MONITORING 45
4.4 FLOW DETERMINATIONS 46
4.5 PROCESS OBSERVATIONS 47
4.6 ANALYTICAL PROCEDURES 47
4.6.1 Description of K-Matrix Analyses 47
4.6.2 Preparation of Analysis Programs 48
4.6.3 Error Analysis of data 49
4.6.4 Concentration Correction Factors 51
4.6.5 Analysis of Sample Concentration Spectra 51

(Continued)

5.0 INTERNAL QUALITY ASSURANCE/QUALITY CONTROL ACTIVITIES 53
5.1 QC PROCEDURES FOR MANUAL FLUE GAS TEST METHODS 53
5.1.1 Sample Concentration Sampling QC Procedures 53
5.1.2 Manual Sampling Equipment Calibration Procedures . . . 54
5.1.2.1 Temperature Measuring Device Calibration . . . 54
5.1.2.2 Dry Gas Meter Calibration 54
5.2 QC PROCEDURES FOR INSTRUMENTAL METHODS 54
5.2.1 Daily Calibrations, Drift Checks, and System Bias Checks 54
5.3 QA/QC CHECKS FOR DATA REDUCTION, VALIDATION, AND REPORTING . 55
5.3.1 Sample Concentration 56
5.3.2 Gas Phase Analysis 56
5.3.3 FTIR Spectra 57
5.4 CORRECTIVE ACTIONS 57

6.0 CONCLUSIONS AND DISCUSSION 58

7.0 REFERENCES 61

APPENDICES

A - Results and Calculations
B - Raw Field Data and Calibration Data Sheets
C - Analytical Data
D - EPA Methods and Protocol

1.0 INTRODUCTION

1.1 BACKGROUND

The U.S. Environmental Protection Agency (EPA), Office of Air Quality Planning and Standards (OAQPS), Industrial Studies Branch (ISB), and Emission Measurement Branch (EMB) directed Entropy, Inc. to conduct an emission test at Houston Lighting and Power Company's (HLPC) Greens Bayou electric generating station, Unit 5, gas-fired boiler in Houston, Texas. The test was conducted on May 20 and 21, 1993. The purpose of this test was to identify which hazardous air pollutants (HAPs) listed in the Clean Air Act Amendments of 1990 are emitted from this source. The measurement method used Fourier transform infrared (FTIR) technology, which had been developed for detecting and quantifying many organic HAPs in a flue gas stream. Besides developing emission factors (for this source category), the data will be included in an EPA report to Congress.

Before this test program, Entropy conducted screening tests using the FTIR method at facilities representing several source categories, including a coal-fired boiler. The screening tests were part of the FTIR Method Development project sponsored by EPA to evaluate the performance and suitability of FTIR spectrometry for HAP emission measurements. These tests helped determine sampling and analytical limitations, provided qualitative information on emission stream composition, and allowed estimation of the mass emission rates for a number of HAPs detected at many process locations. The evaluation demonstrated that gas phase analysis using FTIR can detect and quantify many HAPs at concentrations in the low part per million (ppm) range and higher and a sample concentration technique is able to detect HAPs at sub-ppm levels.

Following the screening tests, Entropy conducted a field validation study at a coal-fired steam generation facility to assess the effectiveness of the FTIR method for measuring HAPs, on a compound-by-compound basis. The flue gas stream was spiked with HAPs at known concentrations so that calculated concentrations, provided by the FTIR analysis, could be compared with actual concentrations in the gas stream. The analyte spiking procedures of EPA Method 301 were adapted for experiments with 47 HAPs. The analytical procedures of Method 301 were used to evaluate the accuracy and precision of the results. Separate procedures were performed to validate a direct gas phase analysis technique and a sample concentration technique of the FTIR method. A complete report, describing the results of the field validation test, has been submitted to EPA[1].

This report was prepared by Entropy, Inc. under EPA Contract No. 68D20163, Work Assignment No. I-34. The field test was performed under Work Assignment 4 of the same Contract. Research Triangle Institute (RTI) provided the process information given in Sections 2.1 and 3.3.3.

1.2 DESCRIPTION OF THE PROJECT

The FTIR-based method uses two different sampling techniques: (1) direct

analysis of the extracted gas stream (hereafter referred to as "gas phase analysis") and (2) sample concentration followed by thermal desorption. Gas phase analysis involves extracting gas from the sample point location and transporting the gas through sample lines to a mobile laboratory where sample conditioning and FTIR analyses are performed. The sample concentration system employs 10 g of Tenax® sorbent, which remove organic compounds from a flue gas stream. Organic compounds adsorbed by Tenax® are then thermally desorbed into the smaller volume of the FTIR absorption cell; this technique allows detection of some compounds down to the ppb level in the original sample. For this test, 850 to 1100 dry liters of flue gas were sampled during each sample concentration run. Section 4.0 describes the sampling systems.

Entropy operated a mobile laboratory (FTIR truck) containing the instrumentation and sampling equipment. The truck was driven to the site at Greens Bayou and parked directly beneath the sample location. The test was performed over a two-day period.

Entropy tested the boiler exhaust gases at the stack. The furnace burned natural gas. Section 2.0 contains descriptions of the process and the sampling point location.

Gas phase analysis was used to measure sulfur dioxide (SO_2), nitrogen oxides (NO_x), carbon monoxide (CO), carbon dioxide (CO_2), and ppm levels of other species. EPA instrumental test methods were used to provide concentrations of CO, CO_2, O_2, and hydrocarbons. Sample concentration was used to measure HAPs at ppb levels. Entropy conducted three 4-hour sample concentration runs at the exhaust stack. Gas phase analysis was performed concurrently with the sample concentration runs. Combustion gas volumetric flows were calculated from fuel data provided by the facility. The test schedule is given in Section 3.1.

1.3 PROJECT ORGANIZATION

This testing program was funded and administered by the Industrial Studies Branch (ISB) and the Emissions Measurement Branch (EMB) of the Office of Air Quality Planning and Standards (OAQPS) of the U.S. EPA. An RTI representative collected process data. The following list presents the organizations and personnel involved in coordinating and performing this project.

HLPC Corporate Contact:	Mr. Derek Furstenwerth	(713) 945-8063
HLPC Greens Bayou:	Mr. Keith Nemec	(713) 458-3157
EMB Work Assignment Managers:	Ms. Lori Lay	(919) 541-4825
	Mr. Dennis Holzschuh	(919) 541-5239
ISB Contacts:	Mr. Kenneth Durkee	(919) 541-5425
	Mr. William Maxwell	(919) 541-5430
Entropy Project Manager:	Dr. Thomas Geyer	(919) 781-3551
Entropy Test Personnel:	Mr. Scott Shanklin	
	Ms. Lisa Grosshandler	
	Dr. Laura Kinner	
	Mr. Greg Blanschan	
	Mr. Mike Worthy	
	Dr. Ed Potts	
RTI Representative:	Mr. Jeffrey Cole	(919) 990-8606

2.0 PROCESS DESCRIPTION AND SAMPLE POINT LOCATIONS

2.1 FACILITY DESCRIPTION

HLPC's Greens Bayou Unit 5 is located in Houston, Texas. Greens Bayou Unit Five is a tangentially fired, tilting-burner, reheat boiler with controlled circulation. It is capable of supplying 3,054,000 lb/hr of steam to a Westinghouse turbo generator that is rated at a design maximum load of 420 MW. The unit normally operates as a load-following unit, meaning that it is operated according to electric demand (the plant load is varied during normal operation from 90-350 MW). Unit 5 undergoes a planned outage every 2 years for a maintenance inspection.

During the test, the unit was operated, whenever possible, at a high MW load (415 $\pm$ 5 MW, approximately 90-100 percent capacity). This was done to maintain consistency in the flue gas flow rates during the test runs. The primary fuel source for Unit 5 is natural gas. Unit 5 is also capable of using No. 6, No. 4, and No. 2 fuel oil as alternate fuels.

Two forced draft fans with motors rated at 3,500 hp each provide and control the amount of preheated combustion air. The fans are located below the stack (Figure 1), however, there is no direct connection to the stack at this point. These fans push combustion air through the corner windboxes and keep the unit under positive pressure. Windboxes are corner-mounted modular firing units containing air nozzles, gas nozzles, and igniters. The fans also provide the sealing air (through a separate duct) that prevents backflow through the gas recirculation system.

In the combustion chamber, the preheated air and fuel are introduced through four windboxes in the four corners of the furnace. Both fuel and combustion air are projected from the corners of the furnace along a line tangential to a small circle moving in a horizontal plane at the center of the furnace. The fuel and combustion air are ignited by an electrical spark from gas igniters. The flame zone extends from the corners of the furnace to the center where the fireball swirls. This fireball location can be moved by adjusting the tilting burners up or down in unison. This technique is used to control furnace heat absorption in the superheater and reheater sections. This action controls the furnace exit-gas temperature for variations in load. Normal combustion flame temperatures are approximately 2,000 to 3,000 °F.

Exhaust gases from the combustion chamber pass through the furnace over the primary superheater, secondary superheater, and secondary reheater. From the secondary reheater, the gases pass through an opening in the rear of the furnace wall into the convection pass. Exhaust gases then pass over the primary reheater and economizer to the air preheater and out the stack. The gas recirculation system inlet is located after the economizer. Flue gas is taken from the economizer outlet and re-introduced at the bottom of the furnace. Recirculation of a portion of the flue gas through the furnace will increase the steam temperature. Temperature control is obtained by positioning dampers to regulate the amount of recirculated gas. Also, the added flue gas flow is used to broaden the combustion zone so that it does not concentrate in the burner area. Keeping the combustion zone spread

throughout the furnace reduces NO_x formation which would be higher if the combustion zone were smaller and hotter.

2.2 AIR POLLUTION CONTROL DEVICES

2.2.1 Nitrogen Oxide (NO_x) Control

Tangentially fired units, because of their design, are low NO_x emitters. These units provide for more complete mixing of fuel and air. Although the gas recirculation installed on the unit tends to reduce NO_x emissions, it is used only as a means of reheat temperature control for the combustion chamber.

2.2.2 Sulfur Dioxide (SO_2) Control

Emissions of SO_2 are considered negligible for natural gas firing. When the alternative fuel (fuel oil) is used, SO_2 emissions are controlled by the use of low sulfur content oil, or split-firing of fuel oil and natural gas. Current State regulations limit fuel oil sulfur content to 0.7 percent by weight. Lower sulfur fuel oil (less than 0.3 percent sulfur) or split-firing to achieve 150 ppm SO_2 is required as of July 31, 1993.

2.2.3 Particulate Control

Particulate and visible emissions are limited by the use of natural gas as the primary fuel and utilization of No. 2 distillate oil as an alternate fuel.

The process information provided in the section above was supplied by Greens Bayou plant personnel.

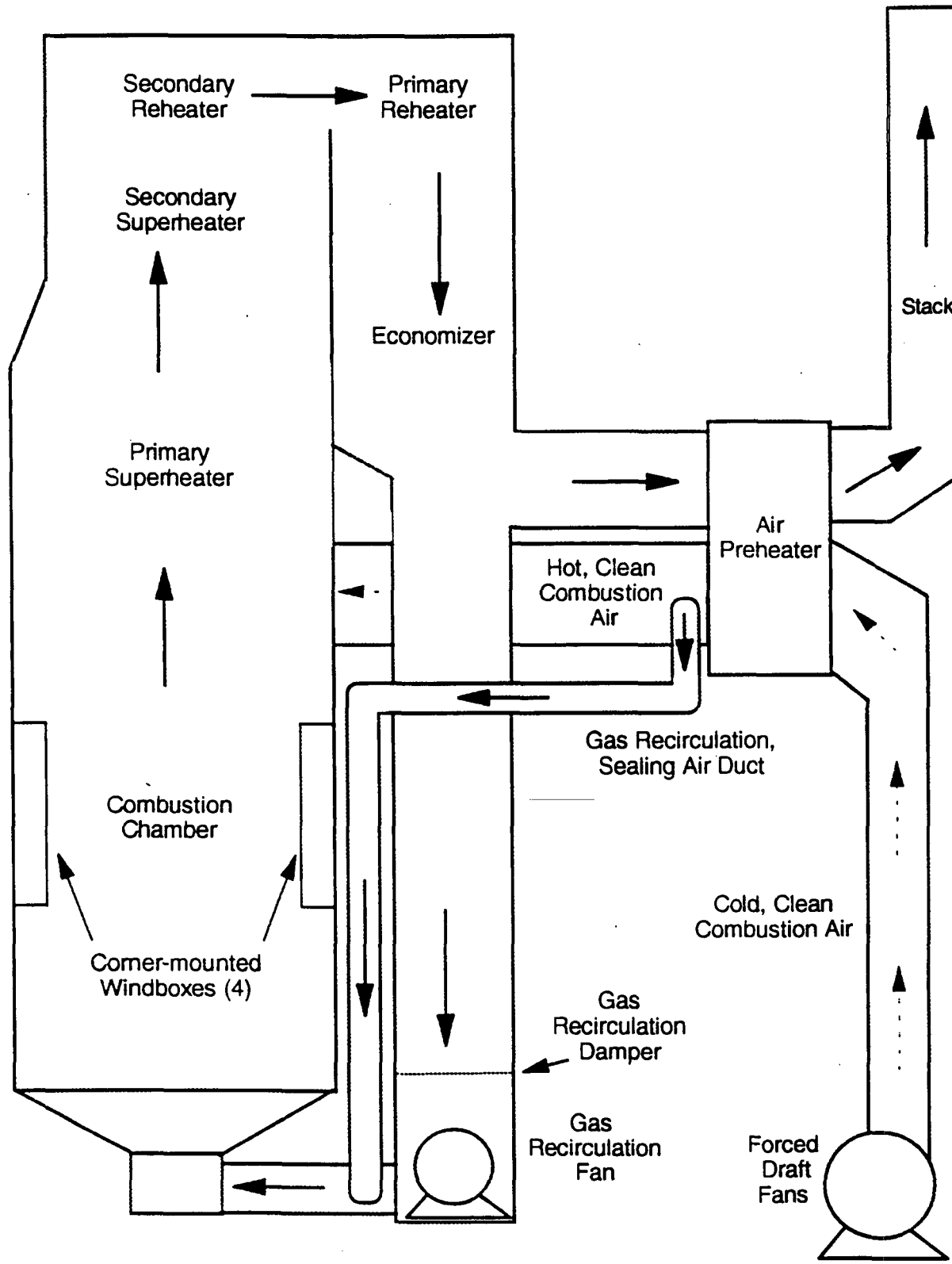

Figure 2-1: Houston Light & Power - Greens Bayou Unit Five Combustion Air & Flue Gas Flow

2.3 SAMPLE POINT LOCATION, UNIT 5 EXHAUST STACK

The sampling was conducted at the rectangular exhaust stack, approximately 8 ft. downstream of the air preheater outlet. Figure 2-2 indicates the position of the test location in relation to the furnace and other components of the system. Figure 2-3 provides greater detail of the test location. The measurement point on the stack is approximately 114 feet above ground level. The stack dimensions are 11 ft. deep by 26.5 ft. wide. Four 6-inch sampling ports are evenly spaced across the width of the stack. For gas phase analysis, the location was reached using 150 feet of heated Teflon line. The middle two ports were used for sampling.

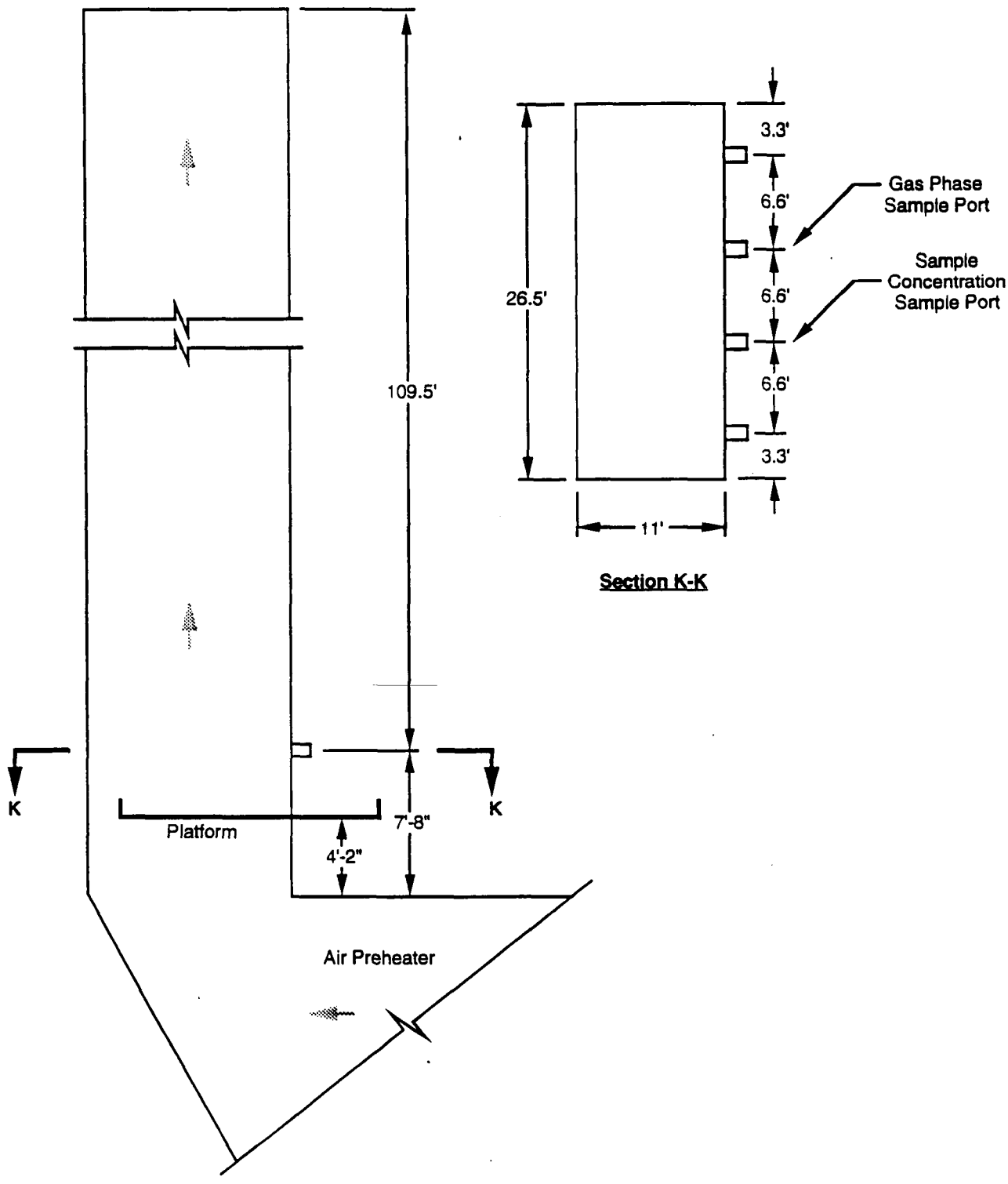

50104 9/93 Figure 2-2. Houston Lighting and Power, Greens Bayou Unit 5 Exhaust Stack.

3.0 SUMMARY AND DISCUSSION OF RESULTS

3.1 OBJECTIVES AND TEST MATRIX

The purpose of the test program was to obtain information that will enable EPA to develop emission factors (for as many HAPs as possible) which will apply to electric utilities employing gas-fired boilers. EPA will also use these results to prepare a report for Congress.

The specific objectives were:

- Measure HAP emissions (employing methods based on FTIR spectrometry) in two concentration ranges, 1 ppm and above using gas phase analysis, and sub-ppm levels using sample concentration/thermal desorption.

- Determine maximum possible concentrations for undetected HAPs based on detection limits of instrumental configuration and limitations imposed by composition of flue gas matrix.

- Measure O_2, CO_2, CO, and hydrocarbons using gas analyzers.

- Obtain process information from Greens Bayou. This information includes the rate of power production during the testing periods.

Table 3-1 presents the test schedule that was followed at Greens Bayou.

TABLE 3-1. FTIR TESTING SCHEDULE AT GREENS BAYOU STACK #5

SAMPLING PERIODS						
Date	Run#[a]	Gas Phase Analysis	Sample Conc.	CEM Analyzers O2,CO2,CO,HC	Thermal Desorption	
					Date	Time
5/19/93	Amb		1740-1840		5/20	2340-2354
5/20/93	1	1130-1416	0930-1330	1016-1416	5/21	2358-0021
	2	1550-1936	1530-1930	1417-1934	5/21	0024-0046
5/21/93	3	1109-1316	0945-1345	1106-1350	5/21	1452-1508
5/21/93	Amb		1415-1515		5/21	1608-1624

[a] Amb denotes an ambient sample.

3.2 FIELD TEST CHANGES AND PROBLEMS

Initially, the plan called for two 4-hour sample concentration runs on May 20 and performing gas phase analysis concurrently for the entirety of the two 4-hour periods. Instead, the first sample concentration run began as soon as the sampling system was ready and the process was operating at full load. The gas phase run started soon after the beginning of sample concentration Run 1, continued through the end of Run 1 and into Run 2, but was stopped before the end of sample concentration Run 2. Gas phase analysis was also performed for less than the 4 hours of sample concentration Run 3. Orsat analysis provided data for the periods when the CEMs were not operating. This plan was the best way to accomplish the test objectives while completing the test runs within the originally planned time.

On the evening of May 20 (after Run 2 and before Run 3) Entropy performed a spiking test using formaldehyde in an experiment unrelated to this project. During the course of the experiment samples spiked with formaldehyde were introduced to the sample conditioning systems. The polymeric form (paraformaldehyde) readily condenses on the walls of the PermaPure membrane. Because the membrane has a large surface area, extensive purging is usually required to remove some compounds. Traces of formaldehyde remained in the PermaPure system and contaminated three of the FTIR samples from Run 3. The formaldehyde concentration in these FTIR samples was about 5 ppm. This contamination did not interfere with the FTIR analysis for any other species.

3.3 SUMMARY OF RESULTS

3.3.1 FTIR Results

Gas phase and sample concentration data were analyzed for the presence of HAPs and other species. All spectra were visually inspected and absorbance bands were identified. Spectra were analyzed, using procedures developed by Entropy, to determine concentrations of any species detected. These results are presented in Tables 3-2 and 3-3. Maximum possible concentrations were calculated for undetected HAPs. These results are presented in Tables 3-4 to 3-6.

3.3.1.1 Gas Phase Results -- Each gas phase FTIR spectrum was separately analyzed for the presence of HAPs and other species. Compounds detected in the gas phase samples were;

- Water vapor.
- CO_2 and CO.
- Nitric oxide (NO) was the largest component of the NO_x emissions. The NO stack concentration, from 51 to 79 ppm, could be measured in hot/wet, condenser and PermaPure samples.
- NO_2 and N_2O were detected, but not quantified because quantitative reference spectra are not currently available.

A set of subtracted spectra was generated so that maximum possible (minimum detectible) concentrations could be calculated for HAPs that were not identified in the sample stream. Reference spectra of water vapor and CO_2 were multiplied by an appropriate scaling factor and subtracted from each of the sample spectra. The remaining base lines were then analyzed for every compound represented in the quantitative reference spectra library to determine the maximum possible concentrations of HAPs that were undetected. The calculations were performed according to the procedures described in Section 4.6.3. Results for hot/wet and dry (treated with the condenser or PermaPure dryers) spectra are presented in Tables 3-4 and 3-5 respectively. The results are averages of the calculated values for all of the spectra over the 3 sample runs.

The maximum possible concentrations for HAPs given in Table 3-4 for hot/wet samples and Table 3-5 for condenser samples represent upper limits for the in-stack concentrations. This means that, for a HAP to have been present in the gas stream, its concentration must have been below the calculated maximum possible concentration. The results presented in Tables 3-4 and 3-5 indicate how effectively these compounds could be measured by FTIR analysis with the analytical system used for this test.

The hot/wet gas phase spectra are difficult to analyze because of strong interference from water vapor. Even so, in results from the hot/wet gas phase data, 96 compounds give maximum possible concentrations below 10 ppm, of these 70 are below 5 ppm and 29 are 1 ppm or lower.

Previously, Entropy developed analysis programs to analyze for HAPs in FTIR spectra of samples extracted from a coal-fired boiler stack. Statistical analyses showed that the programs were successful in measuring some HAPs in hot/wet and condenser samples.[1] The major interferant species detected at the coal-fired boiler are very similar to those that have been identified at the gas-fired boiler (with the exception that SO_2 was not detected in the gas-fired exhaust). Therefore, the same programs were used to analyze the data obtained in this test. The results of the analyses are presented in Appendix C.

3.3.1.2 Sample Concentration Results -- The sample concentration spectra represent integrated samples over each 4-hour run. In addition to water vapor, CO_2, CO, and NO, the following compounds were detected;

- Ammonia (NH_3) was detected in the stack samples form all three runs and in both of the ambient samples.

- Freon(11) (CCl_3F) was detected in the stack sample from Run 1. This has been identified in sample concentration spectra taken at other emission sources and it is believed to be a contaminant.

- HCl was detected in trace amounts in the post-test ambient sample.

- Evidence of hexane was observed in samples from all three runs and also the ambient samples. Absorbencies similar to hexane are often observed in spectra of desorbed samples. These features are due to a mixture of alkane hydrocarbons, including hexane, the sum of whose spectra gives absorbances which appear similar to hexane.

Table 3-3 shows calculated concentrations of HCl and ammonia from all of the test runs. The concentration of CCl_3F could not be determined because quantitative reference spectra are not currently available. The concentration for HCl was near its limit of detection. The calculated value is shown only for the spectrum where HCl was detected. In-stack concentrations were estimated by dividing the in-cell concentration by the concentration factor (Section 4.6.4). The in-stack concentrations are based on the volume of gas sampled and do not account for effects of the sampling system or the adsorption/desorption efficiencies of HCl, NO and NH_3. Therefore, the values in Table 3-3 represent lower limits on the concentrations for these species. Upper limits for NH_3 and HCl are provided by the values given in the gas phase data (Tables 3-4 and 3-5) Table 3-6 gives maximum possible concentrations for species not detected using Tenax.

Other absorbance bands, which remain unidentified, were observed in the sample from Run 2. None of these bands were attributed to HAPs for which Entropy currently has reference spectra. When these bands are identified, it should become clear whether they are due to emissions from the process or were formed by conditions unrelated to the process (i.e. contamination). The first ambient sample and spectra of samples from Runs 1 and 2 contain negative absorbance features due to methane meaning that traces of methane were in the cell when the single beam background spectrum was collected. This minor contamination caused no difficulty with the analysis.

Spectral analysis programs were also previously developed for the validation of the sample concentration technique. The analysis programs were used to evaluate the sample concentration data for HAPs. The results, presented in Appendix C, give calculated concentrations only for those HAPs that Entropy has proven in a field validation study can be measured using Tenax.

TABLE 3-2. FTIR RESULTS FROM ANALYSIS OF GAS PHASE SAMPLES

Date	Run #	Sample Time	Sampling System to FTIR (a)	H2O (%)	Flow Rate (DSCFM)	NO ppm	NO lb/hr
5/20/93	1.0	1124-1127	Hot/Wet	17.0	646,974	77.8	235.1
		1135-1138				73.4	221.8
		1145-1147				78.1	236.1
		1152-1155				75.7	228.8
		1210-1212				68.9	208.2
		1225-1227				74.6	225.5
		1326-1328				71.7	216.7
		1338-1342				72.0	217.6
		1345-1348				70.4	212.8
		1400-1404	Condenser		646,974	78.9	238.5
		1412-1415				78.1	236.1
	2.0	1546-1549	Condenser	17.0	622,720	75.5	219.6
		1554-1555				74.2	215.9
		1600-1602				73.9	215.0
		1713-1715	Perma-Pure		622,720	74.9	217.9
		1720-1724				75.7	220.2
		1730-1740				73.5	213.8
		1745-1800				74.2	215.9
		1820-1831				74.2	215.9
		1901-1903	Hot/Wet		622,720	60.1	174.8
		1912-1914				58.1	169.0
		1924-1926	Condenser		622,720	59.6	173.4
		1930-1932				64.1	186.5

TABLE 3-2. (Continued)

Date	Run #	Sample Time	Sampling System to FTIR	H2O (%)	Flow Rate (DSCFM)	NO ppm	NO lbs/hr
5/21/93	3.0	1108-1109	Hot/Wet	17.0	568,071	54.9	145.7
		1113-1114				53.6	142.2
		1120-1121				52.2	138.5
		1131-1133				55.9	148.4
		1143-1145	Condenser		568,071	58.4	155.0
		1150-1152				56.8	150.7
		1158-1200				56.2	149.1
		1205-1208				60.0	159.2
		1220-1233	Perma-Pure		568,071	56.2	149.1
		1236-1246				55.3	146.8
		1250-1259				50.9	135.1
		1302-1315				57.5	152.6

TABLE 3-3. CONCENTRATIONS CALCULATED FOR SOME HAP'S THAT WERE DETECTED IN SPECTRA OF CONCENTRATED SAMPLES EXTRACTED FROM THE UNIT 5 STACK AT GREENS BAYOU GAS-FIRED BOLER.

Run #	Nitric Oxide (a)		Ammonia		Hydrogen Chloride		Hexane (b)	
	In-Cell (ppm) (c)	Flue Gas (ppm) (d)	In-Cell (ppm)	Flue Gas (ppm)	In-Cell (ppm)	Flue Gas (ppm)	In-Cell (ppm)	Flue Gas (ppm)
1	21.44	0.2079	5.12	0.0496		0.0000	2.03	0.0197
2	21.27	0.1768	1.00	0.0083		0.0000	1.82	0.0151
3	10.65	0.0595	0.49	0.0027		0.0000	1.95	0.0109
Ambient 1		0.0000	12.27	0.0913		0.0000	1.14	0.0085
Ambient 2		0.0000	0.95	0.0071	1.78	0.0133	1.30	0.0097

(a) Compounds detected on Tenax for which Entropy has obtained quantitative reference spectra. Blank spaces indicate a non-detect.

(b) Probably a mixture of alkane hydrocarbons which may include hexane and together give absorbancs similar to hexane.

(c) Concentration of detected compound in FTIR cell calculated using MCOMP analytical routine.

(d) Concentration of detected compound in flue gas calculated by dividing in-cell concentration by the concentration factor (see Section 4.6.5).

TABLE 3-4. CALCULATED MAXIMUM POSSIBLE (MINIMUM DETECTIBLE) CONCENTRATIONS: HAPs NOT DETECTED IN SPECTRA OF HOT/WET SAMPLES EXTRACTED FROM UNIT 5 STACK AT GREENS BAYOU GAS-FIRED BOILER.

LOCATION		STACK	
Compound(a)	Analytical Region (wn)(b)	RMSD(c)	Max. Con. (ppm)(d)
Acetonitrile	1041.40 - 1042.88	1.29E-03	6.89
Acrolein	2636.11 - 2875.59	1.58E-03	2.06
Acrylonitrile	922.19 - 997.82	5.58E-03	4.59
Allyl Chloride	893.51 - 1002.22	5.26E-03	4.29
Benzene	3036.88 - 3063.07	1.37E-02	6.41
Bromoform	1135.90 - 1154.20	5.33E-03	1.00
1,3-Butadiene	870.00 - 1052.64	6.05E-03	6.33
Carbonyl Sulfide	2029.21 - 2075.69	4.49E-02	2.56
Chlorobenzene	1012.42 - 1036.64	7.30E-03	6.72
Ethyl Benzene	2866.13 - 2921.27	2.00E-03	4.08
Ethyl Chloride	943.43 - 1000.16	5.57E-03	7.76
Ethylene Dibromide	1167.96 - 1208.92	7.12E-03	5.07
n-Hexane	2835.27 - 3005.43	5.80E-03	0.84
Methyl Bromide	2948.11 - 2972.53	5.70E-03	6.53
Methyl Chloride	1017.96 - 1020.72	2.31E-03	7.55
Methyl Ethyl Ketone	1140.70 - 1222.63	7.29E-03	5.37
Methyl Isobutyl Ketone	2872.05 - 2994.95	6.05E-03	2.55
Methyl Methacrylate	1137.50 - 1232.04	1.08E-02	1.21
Methylene Chloride	1249.95 - 1285.66	1.48E-01	60.60
2-Nitropropane	831.47 - 868.50	5.15E-03	5.68
Propylene Dichloride	996.86 - 1038.00	6.08E-03	7.16
Styrene	886.32 - 931.22	4.09E-03	3.10
Tetrachloroethylene	899.20 - 925.20	3.99E-03	0.36
Toluene	2862.00 - 2924.00	1.97E-03	3.11
1,1,2-Trichloroethane	909.41 - 960.62	4.70E-03	4.90
Trichloroethylene	919.70 - 959.88	4.72E-03	0.91
2,2,4-Trimethylpentane	2861.57 - 3009.23	6.24E-03	0.75
Vinyl Acetate	832.23 - 906.69	4.49E-03	2.77
Vinyl Bromide	899.81 - 904.54	1.47E-03	0.62
Vinyl Chloride	852.81 - 1056.06	6.12E-03	6.25
Vinylidene Chloride	1059.44 - 1113.01	9.87E-03	2.63
O-xylene	2859.84 - 3095.04	1.07E-02	6.78
P-xylene	2854.43 - 3083.14	1.08E-02	5.88
Carbon Disulfide	2171.29 - 2184.68	2.56E-02	24.30
Carbon Tetrachloride	793.89 - 800.58	1.95E-02	0.38
Chloroform	758.21 - 781.25	3.51E-02	1.77

TABLE 3-4. CALCULATED MAXIMUM POSSIBLE (MINIMUM DETECTIBLE) CONCENTRATIONS: HAPs NOT DETECTED IN SPECTRA OF HOT/WET SAMPLES EXTRACTED FROM UNIT 5 STACK AT GREENS BAYOU GAS-FIRED BOILER.

LOCATION		STACK	
Compound(a)	Analytical Region (wn)(b)	RMSD(c)	Max. Con. (ppm)(d)
Cumene	1015.82 - 1063.57	7.18E-03	17.71
1,2-Epoxy Butane	902.37 - 919.70	3.95E-03	2.87
Ethylene Oxide	866.90 - 875.00	1.69E-03	0.41
Methanol	2807.91 - 3029.40	7.07E-03	5.68
Methyl Chloroform	1057.95 - 1105.30	9.44E-03	1.66
Methyl Iodide	1250.18 - 1253.53	1.92E-03	1.74
Methyl t-Butyl Ether	1195.00 - 1210.00	4.76E-03	0.75
Propylene Oxide	2875.59 - 3097.75	1.14E-02	7.20
M-xylene	2910.25 - 2952.78	4.04E-03	2.46
Acetone	1182.00 - 1255.03	1.23E-02	5.35
Acetaldehyde	2685.41 - 2744.40	1.54E-03	2.53
Acetophenone	874.88 - 1126.36	8.59E-03	7.14
Acrylic Acid	1104.89 - 1164.68	6.32E-03	0.79
Aniline	1102.90 - 1123.63	8.37E-03	2.66
Benzotrichloride	866.50 - 877.90	1.56E-03	0.29
Benzyl Chloride	1262.87 - 1279.12	2.13E-01	96.56
Bis(chloromethyl)ether	1068.78 - 1154.25	8.09E-03	0.86
Chloroacetic acid	1094.97 - 1124.12	7.52E-03	1.60
2-Chloroacteophenone	1274.39 - 1285.42	9.48E-03	1.74
Chloromethyl methyl ether	1111.02 - 1146.08	6.74E-03	0.97
Chloroprene	875.90 - 878.80	1.59E-03	0.28
o-Cresol	1092.80 - 1114.07	6.05E-03	2.51
m-Cresol	1139.68 - 1172.77	3.52E-03	0.63
p-Cresol	1159.10 - 1185.50	6.11E-03	0.66
1,2-Dibromo-3-chloropropane	855.88 - 904.72	3.15E-03	5.36
1,4-Dichlorobenzene	995.96 - 1031.06	4.20E-03	1.80
Dichloroethyl ether	1109.35 - 1155.04	6.58E-03	0.73
1,3-Dichloropropene	768.00 - 791.00	2.09E-02	4.17
Dichlorvos	835.77 - 876.95	4.98E-03	0.57
N,N-Diethyl aniline	2655.32 - 3156.07	1.11E-02	6.34
Dimethyl carbamoyl chloride	889.55 - 917.52	3.35E-03	0.82
Dimethyl formamide	2824.80 - 2873.60	1.54E-03	0.95
1,1-Dimethyl hydrazine	856.12 - 974.09	5.03E-03	4.06
Dimethyl phthalate	1157.86 - 1254.16	1.12E-02	5.83
1,4-Dioxane	2861.10 - 2864.80	1.17E-03	0.18
Epichlorohydrin	943.52 - 981.73	6.35E-03	5.08

TABLE 3-4. CALCULATED MAXIMUM POSSIBLE (MINIMUM DETECTIBLE) CONCENTRATIONS: HAPs NOT DETECTED IN SPECTRA OF HOT/WET SAMPLES EXTRACTED FROM UNIT 5 STACK AT GREENS BAYOU GAS-FIRED BOILER.

LOCATION		STACK	
Compound(a)	Analytical Region (wn)(b)	RMSD(c)	Max. Con. (ppm)(d)
Ethyl Acrylate	1181.93 - 1210.00	6.55E-03	0.33
Ethylene Dichloride	1227.88 - 1241.50	5.49E-03	3.01
Ethylidene dichloride	930.35 - 1126.16	9.45E-03	12.98
Formaldehyde	2788.33 - 2842.20	1.24E-03	1.23
Hexachlorobutadiene	976.90 - 997.70	2.78E-03	0.38
Hexachlorocylcopentadiene	1227.02 - 1240.42	6.07E-03	0.45
Hexachloroethane	995.46 - 1042.73	6.73E-03	23.35
Hexamethylphosphoramide	949.42 - 1019.53	5.51E-03	0.74
Hydrochloric Acid	2817.35 - 2823.26	1.04E-03	1.00
Isophorone	2681.20 - 3130.60	1.12E-02	6.94
Maleic Anhydride	885.27 - 905.56	2.14E-03	0.21
Methyl hydrazine	2683.00 - 3061.78	7.62E-03	8.17
Naphthalene	779.31 - 783.55	1.26E-02	1.21
Nitrobenzene	841.70 - 861.39	5.84E-03	2.26
N-Nitrosodimethylene	928.00 - 1085.28	7.33E-03	2.22
N-Nitrosomorpholine	892.23 - 1024.64	5.18E-03	2.03
Phenol	879.40 - 882.40	4.08E-04	0.79
beta-Propiolactone	860.13 - 957.64	4.35E-03	0.89
Propionaldehyde	2546.18 - 3114.35	8.12E-03	8.53
1,2-Propylenimine	817.57 - 821.31	2.20E-03	0.93
Quioline	800.19 - 803.73	7.16E-03	1.05
Styrene Oxide	861.39 - 903.93	3.09E-03	2.12
1,1,2,2-Tetrachloroethane	794.92 - 824.07	8.86E-03	1.98
2,4-Toluene diisocyanate	885.61 - 905.31	2.11E-03	1.50
o_Toluidine	2858.50 - 2951.85	3.07E-03	2.49
1,2,4-Trichlorobenzene	1009.00 - 1198.39	1.09E-02	7.26
2,4,5-Trichlorophenol	1178.04 - 1204.16	6.62E-03	1.98
2,4,6-Trichlorophenol	856.27 - 863.36	2.23E-03	0.52
Triethylamine	2756.62 - 2839.34	1.26E-03	0.52
Ammonia	893.10 - 926.00	3.83E-03	2.28

(a) HAP's for which Entropy has obtained quantitative reference spectra.

(b) Frequency region, in wavenumbers (1/cm) chosen for the analysis.

(c) Calculated root mean square deviation over the analytical region in spectra that were generated by subtracting reference spectra of interferant species from the sample spectra.

(d) Maximum Concentration (in ppm) of undetected compound, that could have been present in FTIR samples, calculated according to procedures discussed in Sections 4.6.3 and 3.3.1.

TABLE 3-5. CALCULATED MAXIMUM POSSIBLE (MINIMUM DETECTIBLE) CONCENTRATIONS: HAPs NOT DETECTED IN SPECTRA OF CONDENSED SAMPLES EXTRACTED FROM UNIT 5 STACK AT GREENS BAYOU GAS-FIRED BOILER.

LOCATION		STACK	
Compound(a)	Analytical Region (wn)(b)	RMSD(c)	Max. Con. (ppm)(d)
Acetonitrile	1041.40 - 1042.88	1.40E-03	7.47
Acrolein	913.70 - 1000.35	3.15E-03	2.00
Acrylonitrile	922.19 - 997.82	3.24E-03	2.67
Allyl Chloride	893.51 - 1002.22	3.18E-03	2.59
Benzene	3036.88 - 3063.07	2.31E-03	1.08
Bromoform	1135.90 - 1154.20	1.81E-03	0.34
1,3-Butadiene	870.00 - 1052.64	3.23E-03	3.38
Carbonyl Sulfide	2029.21 - 2075.69	1.56E-02	0.89
Chlorobenzene	1012.42 - 1036.64	2.44E-03	2.24
Ethyl Benzene	2866.13 - 2921.27	1.96E-03	4.01
Ethyl Chloride	2916.56 - 3041.03	3.08E-03	2.29
Ethylene Dibromide	1167.96 - 1208.92	2.05E-03	1.46
n-Hexane	2835.27 - 3005.43	3.21E-03	0.47
Methyl Bromide	2948.11 - 2972.53	1.87E-03	2.14
Methyl Chloride	1017.96 - 1020.72	1.46E-03	4.78
Methyl Ethyl Ketone	1140.70 - 1222.63	2.28E-03	1.68
Methyl Isobutyl Ketone	2872.05 - 2994.95	3.38E-03	1.42
Methyl Methacrylate	1137.50 - 1232.04	3.06E-03	0.34
Methylene Chloride	1249.95 - 1285.66	8.45E-03	3.45
2-Nitropropane	831.47 - 868.50	1.86E-03	2.05
Propylene Dichloride	996.86 - 1038.00	2.18E-03	2.57
Styrene	886.32 - 931.22	2.46E-03	1.86
Tetrachloroethylene	899.20 - 925.20	2.16E-03	0.20
Toluene	3018.19 - 3054.70	2.77E-03	1.31
1,1,2-Trichloroethane	909.41 - 960.62	3.41E-03	3.55
Trichloroethylene	826.25 - 860.91	2.65E-03	0.41
2,2,4-Trimethylpentane	2861.57 - 3009.23	3.28E-03	0.39
Vinyl Acetate	832.23 - 906.69	1.78E-03	1.10
Vinyl Bromide	899.81 - 904.54	1.05E-03	0.44
Vinyl Chloride	852.81 - 1056.06	3.19E-03	3.26
Vinylidene Chloride	834.13 - 898.73	1.73E-03	1.10
O-xylene	2859.84 - 3095.04	3.45E-03	2.19
P-xylene	2854.43 - 3083.14	3.46E-03	1.89
Carbon Disulfide	2171.29 - 2184.68	1.48E-02	14.12
Carbon Tetrachloride	793.89 - 800.58	5.11E-03	0.10
Chloroform	758.21 - 781.25	1.92E-02	0.97

TABLE 3-5. CALCULATED MAXIMUM POSSIBLE (MINIMUM DETECTIBLE) CONCENTRATIONS: HAPs NOT DETECTED IN SPECTRA OF CONDENSED SAMPLES EXTRACTED FROM UNIT 5 STACK AT GREENS BAYOU GAS-FIRED BOILER.

LOCATION		STACK	
Compound(a)	Analytical Region (wn)(b)	RMSD(c)	Max. Con. (ppm)(d)
Cumene	1015.82 - 1063.57	3.32E-03	8.18
1,2-Epoxy Butane	2859.05 - 3076.29	3.48E-03	1.48
Ethylene Oxide	866.90 - 875.00	9.48E-04	0.23
Methanol	2807.91 - 3029.40	3.29E-03	2.65
Methyl Chloroform	1057.95 - 1105.30	4.29E-03	0.75
Methyl Iodide	1250.18 - 1253.53	9.98E-04	0.90
Methyl t-Butyl Ether	1195.00 - 1210.00	1.79E-03	0.28
Propylene Oxide	2875.59 - 3097.75	3.54E-03	2.24
M-xylene	2910.25 - 2952.78	2.09E-03	1.27
Acetone	1182.00 - 1255.03	3.41E-03	1.48
Acetaldehyde	3006.20 - 3009.20	6.41E-04	1.53
Acetophenone	1140.40 - 1286.06	5.02E-03	0.65
Acrylic Acid	1104.89 - 1164.68	1.94E-03	0.24
Aniline	1102.90 - 1123.63	1.90E-03	0.60
Benzotrichloride	866.50 - 877.90	8.79E-04	0.16
Benzyl Chloride	1262.87 - 1279.12	9.31E-03	4.22
Bis(chloromethyl)ether	1068.78 - 1154.25	3.63E-03	0.39
Chloroacetic acid	1094.97 - 1124.12	2.19E-03	0.46
2-Chloroacteophenone	1274.39 - 1285.42	4.12E-03	0.76
Chloromethyl methyl ether	1111.02 - 1146.08	1.75E-03	0.25
Chloroprene	875.90 - 878.80	8.72E-04	0.16
o-Cresol	1092.80 - 1114.07	2.19E-03	0.91
m-Cresol	1139.68 - 1172.77	1.80E-03	0.32
p-Cresol	1159.10 - 1185.50	1.95E-03	0.21
1,2-Dibromo-3-chloropropane	855.88 - 904.72	1.54E-03	2.63
1,4-Dichlorobenzene	995.96 - 1031.06	2.00E-03	0.86
Dichloroethyl ether	1109.35 - 1155.04	1.91E-03	0.21
1,3-Dichloropropene	768.00 - 791.00	1.08E-02	2.15
Dichlorvos	835.77 - 876.95	1.85E-03	0.21
N,N-Diethyl aniline	2655.32 - 3156.07	3.38E-03	1.92
Dimethyl carbamoyl chloride	889.55 - 917.52	1.76E-03	0.43
Dimethyl formamide	1057.80 - 1103.90	4.24E-03	0.97
1,1-Dimethyl hydrazine	856.12 - 974.09	2.94E-03	2.37
Dimethyl phthalate	1157.86 - 1254.16	3.15E-03	1.63
1,4-Dioxane	2861.10 - 2864.80	8.33E-04	0.13
Epichlorohydrin	943.52 - 981.73	3.18E-03	2.54

TABLE 3-5. CALCULATED MAXIMUM POSSIBLE (MINIMUM DETECTIBLE) CONCENTRATIONS: HAPs NOT DETECTED IN SPECTRA OF CONDENSED SAMPLES EXTRACTED FROM UNIT 5 STACK AT GREENS BAYOU GAS-FIRED BOILER.

LOCATION		STACK	
Compound(a)	Analytical Region (wn)(b)	RMSD(c)	Max. Con. (ppm)(d)
Ethyl Acrylate	1181.93 - 1210.00	1.70E-03	0.08
Ethylene Dichloride	1227.88 - 1241.50	1.67E-03	0.92
Ethylidene dichloride	930.35 - 1126.16	4.45E-03	6.12
Formaldehyde	2788.33 - 2842.20	1.25E-03	1.23
Hexachlorobutadiene	847.50 - 864.50	2.09E-03	0.19
Hexachlorocylcopentadiene	1227.02 - 1240.42	1.77E-03	0.13
Hexachloroethane	995.46 - 1042.73	2.47E-03	8.56
Hexamethylphosphoramide	949.42 - 1019.53	2.63E-03	0.35
Hydrochloric Acid	2817.35 - 2823.26	8.43E-04	0.81
Isophorone	2681.20 - 3130.60	3.37E-03	2.09
Maleic Anhydride	885.27 - 905.56	1.19E-03	0.12
Methyl hydrazine	2683.00 - 3061.78	3.08E-03	3.31
Naphthalene	779.31 - 783.55	3.74E-03	0.36
Nitrobenzene	841.70 - 861.39	1.85E-03	0.71
N-Nitrosodimethylene	928.00 - 1085.28	3.76E-03	1.14
N-Nitrosomorpholine	892.23 - 1024.64	3.13E-03	1.23
Phenol	1162.67 - 1195.76	1.92E-03	0.29
beta-Propiolactone	860.13 - 957.64	2.79E-03	0.57
Propionaldehyde	2546.18 - 3114.35	2.96E-03	3.11
1,2-Propylenimine	817.57 - 821.31	1.41E-03	0.60
Quioline	800.19 - 803.73	3.05E-03	0.45
Styrene Oxide	861.39 - 903.93	1.57E-03	1.08
1,1,2,2-Tetrachloroethane	794.92 - 824.07	3.17E-03	0.71
2,4-Toluene diisocyanate	885.61 - 905.31	1.19E-03	0.85
o_Toluidine	2858.50 - 2951.85	2.45E-03	1.99
1,2,4-Trichlorobenzene	1009.00 - 1198.39	4.62E-03	3.08
2,4,5-Trichlorophenol	1178.04 - 1204.16	1.66E-03	0.50
2,4,6-Trichlorophenol	856.27 - 863.36	1.25E-03	0.29
Triethylamine	2756.62 - 2839.34	1.22E-03	0.51
Ammonia	893.10 - 926.00	2.15E-03	1.28

(a) HAP's for which Entropy has obtained quantitative reference spectra.

(b) Frequency region, in wavenumbers (1/cm) chosen for the analysis.

(c) Calculated root mean square deviation over the analytical region in spectra that were generated by subtracting reference spectra of interferant species from the sample spectra.

(d) Maximum Concentration (in ppm) of undetected compound, that could have been present in FTIR samples, calculated according to procedures discussed in Sections 4.6.3 and 3.3.1.

TABLE 3-6. CALCULATED MAXIMUM POSSIBLE (MINIMUM DETECTIBLE) CONCENTRATIONS: HAPs NOT DETECTED IN SPECTRA OF CONCENTRATED SAMPLES EXTRACTED FROM UNIT 5 STACK AT GREENS BAYOU GAS-FIRED BOILER.

LOCATION		STACK	
Compound(a)	Analytical R	RMSD(c)	Max. Con. (ppm)(d)
Acetonitrile	1041.40 - 1042.88	4.55E-04	2.42
Acrolein	2636.11 - 2875.59	8.59E-04	1.12
Acrylonitrile	922.19 - 997.82	7.26E-03	5.98
Allyl Chloride	893.51 - 1002.22	6.81E-03	5.56
Benzene	3036.88 - 3063.07	6.33E-03	2.96
Bromoform	1135.90 - 1154.20	2.42E-03	0.45
1,3-Butadiene	870.00 - 1052.64	6.08E-03	6.36
Carbonyl Sulfide	2029.21 - 2075.69	1.59E-02	0.90
Chlorobenzene	1012.42 - 1036.64	3.03E-03	2.79
Ethyl Benzene	2866.13 - 2921.27	1.63E-03	3.33
Ethyl Chloride	2916.56 - 3041.03	6.94E-03	5.15
Ethylene Dibromide	1167.96 - 1208.92	3.71E-03	2.64
n-Hexane	2835.27 - 3005.43	3.07E-03	0.45
Methyl Bromide	2948.11 - 2972.53	2.52E-03	2.89
Methyl Chloride	1017.96 - 1020.72	3.29E-04	1.08
Methyl Ethyl Ketone	1140.70 - 1222.63	5.18E-03	3.82
Methyl Isobutyl Ketone	2872.05 - 2994.95	3.23E-03	1.36
Methyl Methacrylate	1137.50 - 1232.04	5.61E-03	0.63
Methylene Chloride	1249.95 - 1285.66	1.55E-02	6.33
2-Nitropropane	2875.79 - 3039.65	6.27E-03	5.31
Propylene Dichloride	996.86 - 1038.00	2.73E-03	3.21
Styrene	886.32 - 931.22	5.01E-03	3.80
Tetrachloroethylene	899.20 - 925.20	2.56E-03	0.23
Toluene	2862.00 - 2924.00	1.67E-03	2.63
1,1,2-Trichloroethane	909.41 - 960.62	6.23E-03	6.49
Trichloroethylene	919.70 - 959.88	6.00E-03	1.15
2,2,4-Trimethylpentane	2861.57 - 3009.23	3.28E-03	0.39
Vinyl Acetate	919.53 - 1046.33	6.61E-03	3.31
Vinyl Bromide	899.81 - 904.54	2.35E-04	0.10
Vinyl Chloride	852.81 - 1056.06	6.99E-03	7.14
Vinylidene Chloride	1059.44 - 1113.01	7.66E-03	2.04
O-xylene	2859.84 - 3095.04	6.60E-03	4.18
P-xylene	770.61 - 819.06	3.75E-03	2.14
Carbon Disulfide	2171.29 - 2184.68	1.11E-02	10.53
Carbon Tetrachloride	793.89 - 800.58	5.68E-03	0.11
Chloroform	758.21 - 781.25	1.74E-03	0.09

TABLE 3-6. CALCULATED MAXIMUM POSSIBLE (MINIMUM DETECTIBLE) CONCENTRATIONS: HAPs NOT DETECTED IN SPECTRA OF CONCENTRATED SAMPLES EXTRACTED FROM UNIT 5 STACK AT GREENS BAYOU GAS-FIRED BOILER.

LOCATION		STACK	
Compound(a)	Analytical R	RMSD(c)	Max. Con. (ppm)(d)
Cumene	1015.82 - 1063.57	3.50E-03	8.64
1,2-Epoxy Butane	902.37 - 919.70	2.61E-03	1.90
Ethylene Oxide	866.90 - 875.00	2.82E-03	0.68
Methanol	2807.91 - 3029.40	4.09E-03	3.29
Methyl Chloroform	1057.95 - 1105.30	7.72E-03	1.35
Methyl Iodide	1250.18 - 1253.53	8.29E-04	0.75
Methyl t-Butyl Ether	1195.00 - 1210.00	1.72E-03	0.27
Propylene Oxide	2875.59 - 3097.75	6.86E-03	4.34
M-xylene	2910.25 - 2952.78	2.16E-03	1.31
Acetone	1182.00 - 1255.03	5.72E-03	2.48
Acetaldehyde	2685.41 - 2744.40	6.80E-04	1.12
Acetophenone	1140.40 - 1286.06	9.49E-03	1.22
Acrylic Acid	1104.89 - 1164.68	3.55E-03	0.45
Aniline	1102.90 - 1123.63	4.05E-03	1.29
Benzotrichloride	805.30 - 823.50	2.04E-03	0.23
Benzyl Chloride	1262.87 - 1279.12	1.59E-02	7.19
Bis(chloromethyl)ether	1068.78 - 1154.25	5.44E-03	0.58
Chloroacetic acid	1094.97 - 1124.12	3.78E-03	0.80
2-Chloroacteophenone	1274.39 - 1285.42	8.12E-03	1.49
Chloromethyl methyl ether	1111.02 - 1146.08	3.36E-03	0.49
Chloroprene	875.90 - 878.80	4.83E-04	0.09
o-Cresol	1092.80 - 1114.07	3.21E-03	1.33
m-Cresol	1139.68 - 1172.77	2.42E-03	0.43
p-Cresol	1159.10 - 1185.50	3.27E-03	0.35
1,2-Dibromo-3-chloropropane	855.88 - 904.72	3.34E-03	5.69
1,4-Dichlorobenzene	995.96 - 1031.06	2.27E-03	0.97
Dichloroethyl ether	1109.35 - 1155.04	3.18E-03	0.36
1,3-Dichloropropene	768.00 - 791.00	2.80E-03	0.56
Dichlorvos	967.79 - 1000.25	3.48E-03	0.48
N,N-Diethyl aniline	2655.32 - 3156.07	5.76E-03	3.28
Dimethyl carbamoyl chloride	889.55 - 917.52	2.49E-03	0.61
Dimethyl formamide	2824.80 - 2873.60	7.00E-04	0.43
1,1-Dimethyl hydrazine	856.12 - 974.09	6.68E-03	5.39
Dimethyl phthalate	1157.86 - 1254.16	5.51E-03	2.86
1,4-Dioxane	2861.10 - 2864.80	3.59E-04	0.05
Epichlorohydrin	943.52 - 981.73	7.80E-03	6.24

TABLE 3-6. CALCULATED MAXIMUM POSSIBLE (MINIMUM DETECTIBLE) CONCENTRATIONS: HAPs NOT DETECTED IN SPECTRA OF CONCENTRATED SAMPLES EXTRACTED FROM UNIT 5 STACK AT GREENS BAYOU GAS-FIRED BOILER.

LOCATION		STACK	
Compound(a)	Analytical R	RMSD(c)	Max. Con. (ppm)(d)
Ethyl Acrylate	1181.93 - 1210.00	3.13E-03	0.16
Ethylene Dichloride	1227.88 - 1241.50	2.00E-03	1.10
Ethylidene dichloride	696.22 - 750.59	2.97E-02	8.40
Formaldehyde	2788.33 - 2842.20	6.98E-04	0.69
Hexachlorobutadiene	976.90 - 997.70	2.47E-03	0.34
Hexachlorocylcopentadiene	1227.02 - 1240.42	1.95E-03	0.14
Hexachloroethane	995.46 - 1042.73	2.71E-03	9.40
Hexamethylphosphoramide	949.42 - 1019.53	6.15E-03	0.82
Hydrochloric Acid	2817.35 - 2823.26	3.71E-04	0.36
Isophorone	2681.20 - 3130.60	5.80E-03	3.60
Maleic Anhydride	838.45 - 841.30	1.14E-03	0.11
Methyl hydrazine	2683.00 - 3061.78	4.70E-03	5.04
Naphthalene	779.31 - 783.55	1.19E-03	0.11
Nitrobenzene	841.70 - 861.39	6.93E-03	2.67
N-Nitrosodimethylene	928.00 - 1085.28	9.74E-03	2.95
N-Nitrosomorpholine	892.23 - 1024.64	6.33E-03	2.49
Phenol	1162.67 - 1195.76	3.84E-03	0.58
beta-Propiolactone	860.13 - 957.64	5.40E-03	1.11
Propionaldehyde	2546.18 - 3114.35	4.82E-03	5.07
1,2-Propylenimine	817.57 - 821.31	4.42E-04	0.19
Quioline	800.19 - 803.73	1.77E-03	0.26
Styrene Oxide	861.39 - 903.93	2.80E-03	1.93
1,1,2,2-Tetrachloroethane	794.92 - 824.07	3.87E-03	0.86
2,4-Toluene diisocyanate	885.61 - 905.31	1.82E-03	1.29
o_Toluidine	2858.50 - 2951.85	2.17E-03	1.76
1,2,4-Trichlorobenzene	1009.00 - 1198.39	9.32E-03	6.21
2,4,5-Trichlorophenol	1178.04 - 1204.16	3.32E-03	1.00
2,4,6-Trichlorophenol	856.27 - 863.36	1.54E-03	0.36
Triethylamine	2756.62 - 2839.34	7.78E-04	0.32
Ammonia	893.10 - 926.00	2.52E-03	1.50

(a) HAP's for which Entropy has obtained quantitative reference spectra.

(b) Frequency region, in wavenumbers (1/cm) chosen for the analysis.

(c) Calculated root mean square deviation over the analytical region in spectra that were generated by subtracting reference spectra of interferant species from the sample spectra.

(d) Maximum Concentration (in ppm) of undetected compound, that could have been present in FTIR samples, calculated according to procedures discussed in Sections 4.6.3 and 3.3.1.

3.3.2 Instrumental and Manual Test Results

Table 3-7 presents the results of the EPA Methods 3A and 10 tests as described in Section 4-3. No HC data were available during the test because the analyzer malfunctioned. But, judging from the FTIR data, the HC concentration was below the detection limit of the HC analyzer. A summary of the CEM results is presented in Table 3-8. All CEM results in the tables were determined from the average gas concentration measured during the run and adjusted for drift based on the pre- and post-test run calibration check results (Equation 6C-1 presented in EPA Method 6C, Section 8). Although not required by Method 10, the same data reduction procedures as that in Method 3A were used for the CO determinations to ensure the data quality. All measurement system calibration bias and calibration drift checks for each test run met the applicable specifications of the test methods.

TABLE 3-7. RESULTS FROM GREENS BAYOU UNIT 5

Date	Run #	Sample Time	Sampling System to FTIR (a)	O2 (%d)	CO2 (%d)	CO ppmd	CO lb/hr	Flow Rate (WSCFM)	Flow Rate (DSCFM)
5/20/93	1	1124-1127	Hot/Wet	2.1	10.7	0.0	0.0	779,487	646,974
		1135-1138		2.3	10.6	0.0	0.0		
		1145-1147		2.2	10.6	0.0	0.0		
		1152-1155		2.3	10.6	0.0	0.0		
		1210-1212		2.1	10.7	0.0	0.0		
		1225-1227		1.8	10.8	1.6	4.5		
		1326-1328		2.1	10.7	0.0	0.0		
		1338-1342		2.1	10.7	0.0	0.0		
		1345-1348		2.1	10.7	0.0	0.0		
		1400-1404	Condenser	2.1	10.7	0.0	0.0	779,487	646,974
		1412-1415		1.8	11.0	14.0	39.5		
	2	1546-1549	Condenser	1.6	11.1	4.7	12.8	750,265	622,720
		1554-1555		1.8	10.8	1.1	3.0		
		1600-1602		1.9	10.8	0.0	0.0		
		1713-1715	Perma-Pure	1.8	11.0	0.2	0.5	750,265	622,720
		1720-1724		1.7	11.0	3.4	9.2		
		1730-1740		1.6	11.1	6.3	17.1		
		1745-1800		1.7	11.0	4.9	13.3		
		1820-1831		1.7	11.1	5.9	16.0		
		1901-1903	Hot/Wet	1.5	11.1	13.0	35.3	750,265	622,720
		1912-1914		1.6	11.1	10.3	28.0		
		1924-1926	Condenser	1.7	11.1	4.7	12.8	750,265	622,720
		1930-1932		1.8	11.0	4.1	11.1		

TABLE 3-7. RESULTS FROM GREENS BAYOU UNIT 5 (Cont.)

Date	Run #	Sample Time	Sampling System to FTIR	O2 (%d)	CO2 (%d)	CO ppmd	CO lb/hr	Flow Rate (WSCFM)	Flow Rate (DSCFM)
5/21/93	3	1108-1109	Hot/Wet	1.9	10.9	0.5	1.2	684,423	568,071
		1113-1114		1.9	10.8	1.1	2.7		
		1120-1121		1.8	10.9	3.9	9.7		
		1131-1133		2.0	10.8	0.8	2.0		
		1143-1145	Condenser	1.9	10.9	0.9	2.2	684,423	568,071
		1150-1152		1.9	10.9	1.8	4.5		
		1158-1200		1.9	10.9	0.8	2.0		
		1205-1208		2.0	10.8	0.7	1.7		
		1220-1233	Perma-Pure	1.9	10.9	2.5	6.2	684,423	568,071
		1236-1246		1.9	10.9	2.0	5.0		
		1250-1259		2.0	10.8	0.0	0.0		
		1302-1315		2.1	10.8	0.0	0.0		

(a) Sampling system descriptions are contained in Section 4.1. CEM procedures are described in Section 4.3. Description of flow rate calculations is contained in Section 4.4.

TABLE 3-8. SUMMARY OF CEM AND MANUAL TEST RESULTS AT GREENS BAYOU UNIT 5

DATE	RUN #	SAMPLE TIME	SAMPLING SYSTEM TO FTIR	O_2 ($\%_d$)	CO_2 ($\%_d$)	CO		FLOW RATE (WSCFM)	FLOW RATE (DSCFM)
						ppm_d	lb/hr		
5/20/93	1	1124-1347	Hot/Wet	2.2	10.7	0.0	0.0	779,487	646,974
		1400-1415	Condenser	2.0	10.8	3.0	8.5		
	2	1546-1602	Condenser	1.8	11.0	6.8	18.5	750,265	622,720
		1713-1831	PermaPure	1.7	11.0	4.3	11.7		
		1901-1914	Hot/Wet	1.5	11.1	11.8	32.0		
		1925-1932	Condenser	1.7	11.1	4.0	10.9		
5/21/93	3	1108-1132	Hot/Wet	1.9	10.8	1.2	3.0	684,423	568,071
		1143-1208	Condenser	1.9	10.9	2.4	5.9		
		1220-1315	PermaPure	2.0	10.8	0.9	2.2		

Each test run emission rate (expressed in units of lb/hr) was computed using the averaged concentration measurement for the test period, the flue gas volumetric flow rate, and the appropriate conversion factors. The boiler exhaust gas flow rates were determined using EPA Method 19 procedures and the measured flue gas O_2 and are presented in Table 3-9. The natural gas analysis data were supplied by HLPC and are included in Appendix A. The sets of analysis data were averaged and used with the fuel feed rates to the boiler during the test periods to compute the heat consumption and F_d-factor needed to determine the dry exhaust gas volumetric flow rate (in units of dry standard cubic feet per minute, dscfm) for each test run. Wet basis flow rates (wscfm) were computed based on 17% H_2O in the flue gas.

TABLE 3-9. BOILER EXHAUST GAS VOLUMETRIC FLOW RATE DETERMINATIONS

RUN NO.	GCV (Btu/ft^3)	AVG. FUEL FLOW ($mmft^3/day$)	HEAT CONSUMPTION (mmBtu/hr)	F_d (dscf/mmBtu)	O_2 ($\%_d$)	FLUE GAS FLOW (dscfm)
1	1034	93.8	4044.7	8633	2.1	646,974
2	1034	92.3	3975.9	8633	1.7	622,720
3	1034	83.3	3589.2	8633	1.9	568,071

As a quality assurance check of the O_2 and CO_2 data, F_o factors were calculated for each test run. The calculated F_o results presented in Table 3-10 are within the range of acceptable values.

TABLE 3-10. VALIDATION OF O_2 AND CO_2 MEASUREMENT DATA

RUN NO.	O_2 ($\%_d$)	CO_2 ($\%_d$)	CALCULATED F_o
1	2.2	10.7	1.75
	2.0	10.8	1.75
2	1.8	11.0	1.74
	1.7	11.0	1.75
	1.5	11.1	1.75
	1.7	11.1	1.73
3	1.9	10.8	1.76
	1.9	10.9	1.74
	2.0	10.8	1.75

Calculated $F_o = (20.9-\%O_2) / \%CO_2$

EPA Method 3 acceptance criteria,
F_o range: 1.64 - 1.88 for natural gas

3.3.3 Process Results

3.3.3.1 Operating Conditions -- The preheater outlet and inlet temperatures, natural gas flow (mmBtu/hr), generator output (in megaWatts), stack gas O_2 concentration (in percent) are presented Table 3-11 and Figures 3-1 to 3-3.

3.3.3.2 Process Variations During Testing -- Variations and changes that occurred with the process are listed below.

1) During Run 1 (9:30 a.m. to 1:30 p.m., 5/20/93), a cooling tower fan (1 of 10) was turned off from 10:40 a.m.-11:07 a.m. and from 1:25 p.m. to the end of Run 1.

2) During Run 2 (3:30 p.m. to 7:30 p.m., 5/20/93), a "frozen shut" high-pressure steam governor valve (1 of 8) was cycled twice and freed. This action resulted in increases in all monitored data except the oxygen reading. Subsequent decreases resulted when plant personnel cycled the valve again and it remained closed.

3) During Run 3 (9:45 a.m. to 1:45 p.m., 5/21/93), the unit was operated between 360 and 370 MW. This range was used to reduce the possibility of damage from the "frozen" high-pressure steam governor valve.

TABLE 3-11 Process Data Sheet: Houston Lighting and Power Co., Greens Bayou, Unit Five

		MW	Deg F	Deg F	Percent	Million Btu/hr
Date	Time	Operating capacity	Preheater inlet temp.	Preheater outlet temp.	Oxygen	Natural Gas Flow
Test 1						
5/20/93	9:30 AM	414.01	657.80	264.88	1.6287	4052.2
5/20/93	9:38 AM	414.01	657.43	265.48	1.7556	4064.9
5/20/93	9:46 AM	413.80	657.80	265.48	1.8305	4060.3
5/20/93	9:54 AM	417.17	658.02	265.70	1.7480	4060.3
5/20/93	10:02 AM	413.80	658.10	266.08	1.8457	4057.1
5/20/93	10:10 AM	413.80	657.88	266.30	1.7112	4049.1
5/20/93	10:18 AM	414.01	657.80	266.60	1.7274	4051.2
5/20/93	10:26 AM	413.80	658.02	267.20	1.7263	4041.3
5/20/93	10:34 AM	413.80	657.88	267.73	1.7871	4037.5
5/20/93	10:42 AM	414.01	657.88	267.88	1.6786	4036.8
5/20/93	10:50 AM	412.71	657.58	268.33	1.6916	4039.7
5/20/93	10:58 AM	411.56	657.80	268.63	1.7090	4035.8
5/20/93	11:06 AM	411.77	658.02	268.93	1.7068	4040.5
5/20/93	11:14 AM	413.23	657.88	268.78	1.7632	4042.9
5/20/93	11:22 AM	414.01	657.80	268.93	1.7600	4045.5
5/20/93	11:30 AM	414.01	658.02	269.75	2.0887	4054.3
5/20/93	11:38 AM	414.38	658.70	270.20	1.9726	4048.3
5/20/93	11:46 AM	414.38	659.00	270.73	2.0041	4048.3
5/20/93	11:54 AM	414.17	658.93	270.43	1.9325	4048.5
5/20/93	12:02 PM	414.38	658.63	270.28	2.0313	4045.7
5/20/93	12:10 PM	413.64	658.18	269.83	1.7730	4041.6
5/20/93	12:18 PM	413.80	658.10	270.43	1.8457	4043.3
5/20/93	12:26 PM	414.38	657.80	269.98	1.6211	4037.8
5/20/93	12:34 PM	413.80	656.68	269.60	1.5430	4040.4
5/20/93	12:42 PM	413.64	656.60	269.90	1.5972	4043.9
5/20/93	12:50 PM	414.01	657.13	269.98	1.5820	4035.9
5/20/93	12:58 PM	413.07	656.83	269.98	1.5592	4024.8
5/20/93	1:06 PM	413.07	656.83	270.20	1.5549	4037.4
5/20/93	1:14 PM	413.23	656.98	270.28	1.7665	4037.1
5/20/93	1:22 PM	413.44	657.43	270.28	1.8522	4043.6
5/20/93	1:30 PM	412.29	657.88	271.03	1.8609	4039.9
Test 2						
5/20/93	3:30 PM	413.80	654.20	269.30	1.4724	4014.2
5/20/93	3:38 PM	427.14	656.98	271.03	1.5451	4139.6
5/20/93	3:46 PM	432.76	661.70	274.10	1.4106	4184.1
5/20/93	3:54 PM	408.96	659.68	273.58	1.6504	3876.3
5/20/93	4:02 PM	411.77	656.98	270.88	1.7437	3958.8
5/20/93	4:10 PM	411.36	655.77	270.43	1.6015	3963.4
5/20/93	4:18 PM	410.83	654.80	269.98	1.6330	3964.4
5/20/93	4:26 PM	411.20	654.80	269.83	1.6265	3965.1
5/20/93	4:34 PM	410.99	655.02	269.90	1.6970	3973.8
5/20/93	4:42 PM	411.20	655.02	270.20	1.6265	3958.5
5/20/93	4:50 PM	410.83	654.73	270.28	1.4670	3960.0
5/20/93	4:58 PM	410.83	654.27	270.28	1.6211	3963.2

TABLE 3-11 Process Data Sheet: Houston Lighting and Power Co., Greens Bayou, Unit Five (Cont.)

Date	Time	MW Operating capacity	Deg F Preheater inlet temp.	Deg F Preheater outlet temp.	Percent Oxygen	Million Btu/hr Natural Gas Flow
5/20/93	5:06 PM	410.99	654.73	270.88	1.5864	3966.6
5/20/93	5:14 PM	410.99	655.33	270.50	1.7545	3969.3
5/20/93	5:22 PM	410.63	655.18	270.13	1.7133	3967.9
5/20/93	5:30 PM	411.36	654.65	269.98	1.4279	3959.8
5/20/93	5:38 PM	410.99	654.20	269.68	1.4279	3960.3
5/20/93	5:46 PM	410.99	653.60	269.68	1.5028	3974.3
5/20/93	5:54 PM	410.99	654.13	269.38	1.4355	3971.2
5/20/93	6:02 PM	411.56	654.50	269.83	1.6601	3965.4
5/20/93	6:10 PM	410.99	654.27	269.60	1.5820	3963.7
5/20/93	6:18 PM	411.56	654.58	269.98	1.6081	3977.3
5/20/93	6:26 PM	411.93	654.73	269.90	1.5375	3959.6
5/20/93	6:34 PM	411.20	654.43	269.60	1.5994	3952.6
5/20/93	6:42 PM	411.20	654.13	269.83	1.6406	3966.2
5/20/93	6:50 PM	411.93	654.73	269.68	1.5961	3972.7
5/20/93	6:58 PM	411.36	653.98	269.08	1.3596	3955.3
5/20/93	7:06 PM	411.56	653.90	268.70	1.3520	3954.6
5/20/93	7:14 PM	411.20	653.68	268.93	1.3715	3970.2
5/20/93	7:22 PM	411.36	653.98	268.70	1.4160	3963.6
5/20/93	7:30 PM	411.77	654.13	268.93	1.5820	3960.8
[redacted]a for 3D flow traverse (after Test 2)						
5/20/93	7:38 PM					3959.2
5/20/93	7:46 PM					3972.9
5/20/93	7:54 PM					3844.2
5/20/93	8:02 PM					3845.2
5/20/93	8:10 PM					3862.1
5/20/93	8:18 PM					3631.7
5/20/93	8:26 PM					3722.7
5/20/93	8:34 PM					3340.8
5/20/93	8:42 PM					3069.2
5/20/93	8:50 PM					2703.6
5/20/93	8:58 PM					2701.6
5/20/93	9:06 PM					2607.2
5/20/93	9:14 PM					2707.2
5/20/93	9:22 PM					2566.2
5/20/93	9:30 PM					2544.3
5/20/93	9:38 PM					2410.2
5/20/93	9:46 PM					2469.7
5/20/93	9:54 PM					2507.8
5/20/93	10:02 PM					2494.2
5/20/93	10:10 PM					2535.0
5/20/93	10:18 PM					2599.0
5/20/93	10:26 PM					2463.0
5/20/93	10:34 PM					2300.0

TABLE 3-11 Process Data Sheet: Houston Lighting and Power Co., Greens Bayou, Unit Five (Cont.)

Date	Time	MW Operating capacity	Deg F Preheater inlet temp.	Deg F Preheater outlet temp.	Percent Oxygen	Million Btu/hr Natural Gas Flow
5/20/93	10:42 PM					1894.8
5/20/93	10:50 PM					1529.3
5/20/93	10:58 PM					1535.0
5/20/93	11:06 PM					1526.5
5/20/93	11:14 PM					1521.0
5/20/93	11:22 PM					1538.1
5/20/93	11:30 PM					1570.3
5/20/93	11:38 PM					1594.5
5/20/93	11:46 PM					1596.4
5/20/93	11:54 PM					1525.9
5/20/93	12:02 AM					1538.0
5/20/93	12:10 AM					1480.5
5/20/93	12:18 AM					1463.4
5/20/93	12:26 AM					1518.5
5/20/93	12:34 AM					1545.8
5/20/93	12:42 AM					1555.1
Test 3						
5/21/93	9:44 AM	365.26	642.20	257.08	1.8316	3557.6
5/21/93	9:52 AM	366.20	642.73	257.53	2.0215	3598.6
5/21/93	10:00 AM	364.69	642.80	257.83	1.9585	3656.6
5/21/93	10:08 AM	366.20	642.58	258.13	1.7990	3588.9
5/21/93	10:16 AM	364.32	641.38	257.83	1.8110	3593.8
5/21/93	10:24 AM	365.83	642.13	258.73	1.8088	3628.6
5/21/93	10:32 AM	366.20	642.27	258.58	1.9184	3573.9
5/21/93	10:40 AM	364.11	642.50	258.88	1.9184	3573.9
5/21/93	10:48 AM	365.05	642.43	259.33	1.9336	3652.5
5/21/93	10:56 AM	364.32	642.20	259.18	1.7969	3568.3
5/21/93	11:04 AM	363.75	642.43	259.48	1.6471	3560.4
5/21/93	11:12 AM	363.02	641.90	259.48	1.7773	3562.9
5/21/93	11:20 AM	363.54	642.50	259.40	1.7969	3585.4
5/21/93	11:28 AM	363.54	643.02	260.23	1.8945	3572.4
5/21/93	11:36 AM	366.20	642.88	260.60	1.9227	3608.9
5/21/93	11:44 AM	364.11	642.13	260.38	1.7969	3586.8
5/21/93	11:52 AM	364.89	642.20	260.08	1.7914	3559.6
5/21/93	12:00 PM	362.24	642.43	260.08	1.7285	3539.2
5/21/93	12:08 PM	366.56	643.02	260.23	2.0551	3695.6
5/21/93	12:16 PM	364.69	642.88	260.30	1.6743	3561.9
5/21/93	12:24 PM	364.69	642.43	260.60	1.6547	3608.3
5/21/93	12:32 PM	366.20	643.02	260.60	1.9282	3648.3
5/21/93	12:40 PM	363.02	642.20	260.38	1.7990	3618.6
5/21/93	12:48 PM	363.39	642.20	260.38	1.8945	3556.0
5/21/93	12:56 PM	363.39	642.73	260.68	2.0085	3615.8
5/21/93	1:04 PM	363.18	643.10	260.68	1.9455	3574.5
5/21/93	1:12 PM	363.54	642.43	260.60	2.1625	3592.7
5/21/93	1:20 PM	365.83	642.80	260.83	1.8869	3574.5
5/21/93	1:28 PM	363.02	643.33	260.68	1.9282	3543.1

TABLE 3-11 Process Data Sheet: Houston Lighting and Power Co., Greens Bayou, Unit Five (Cont.)

		MW	Deg F	Deg F	Percent	Million Btu/hr
Date	Time	Operating capacity	Preheater inlet temp.	Preheater outlet temp.	Oxygen	Natural Gas Flow
5/21/93	1:36 PM	363.96	643.70	260.53	1.8989	3559.5
5/21/93	1:44 PM	365.26	642.80	261.13	1.7871	3548.2
Data for 3D flow traverse (after Test 3)						
5/21/93	1:52 PM					3543.2
5/21/93	2:00 PM					3570.3
5/21/93	2:08 PM					3617.3
5/21/93	2:16 PM					3508.7
5/21/93	2:24 PM					3583.8
5/21/93	2:32 PM					3543.2
5/21/93	2:40 PM					3602.2
5/21/93	2:48 PM					3606.5
5/21/93	2:56 PM					3462.2
5/21/93	3:04 PM					3505.7
5/21/93	3:12 PM					3571.8
5/21/93	3:20 PM					3523.8
5/21/93	3:28 PM					3547.3

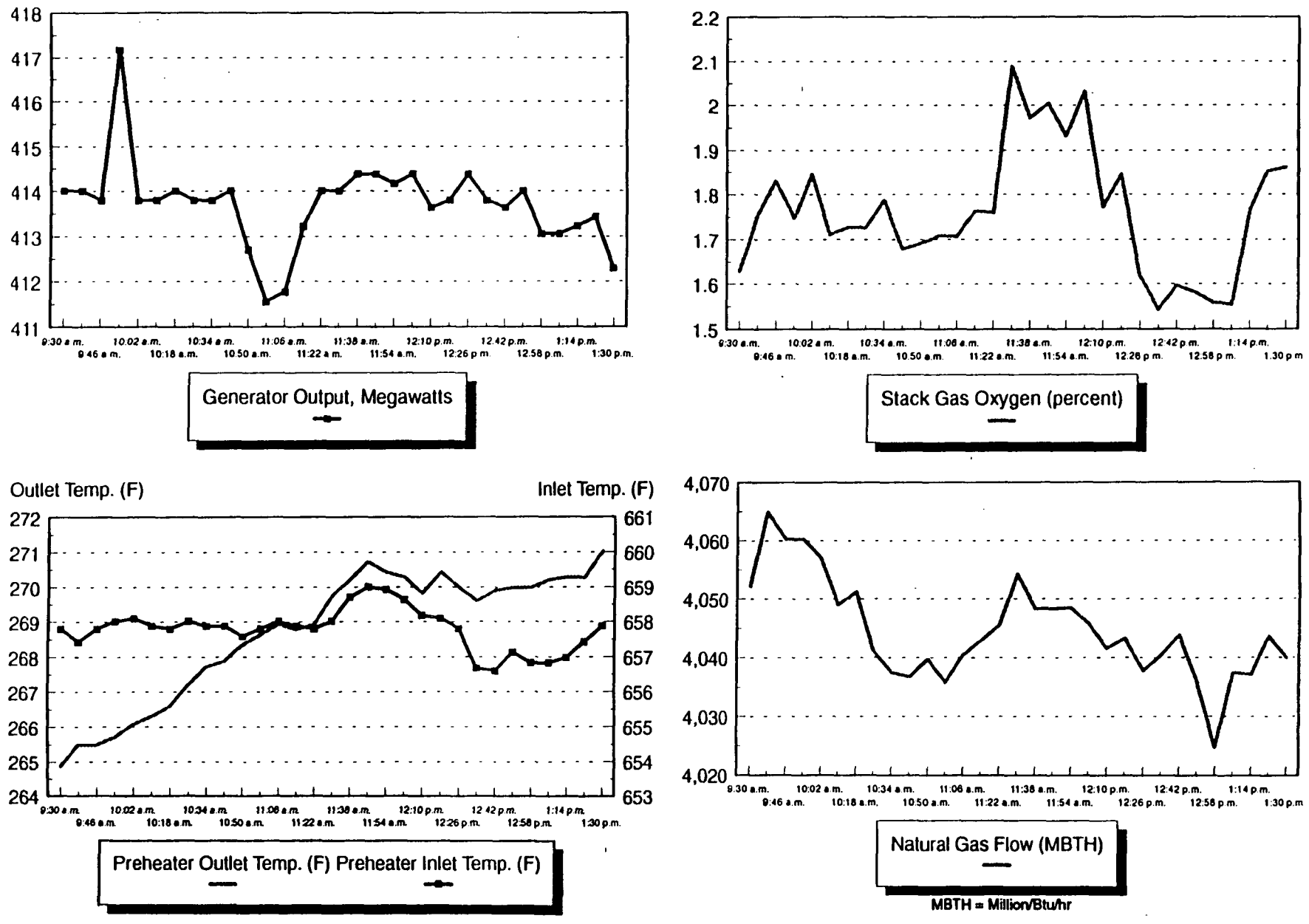

Figure 3-1 Houston Lighting & Power Co. Greens Bayou Unit Five, Test #1, (5/20/93, 9:30 a.m.-1:30 p.m.)

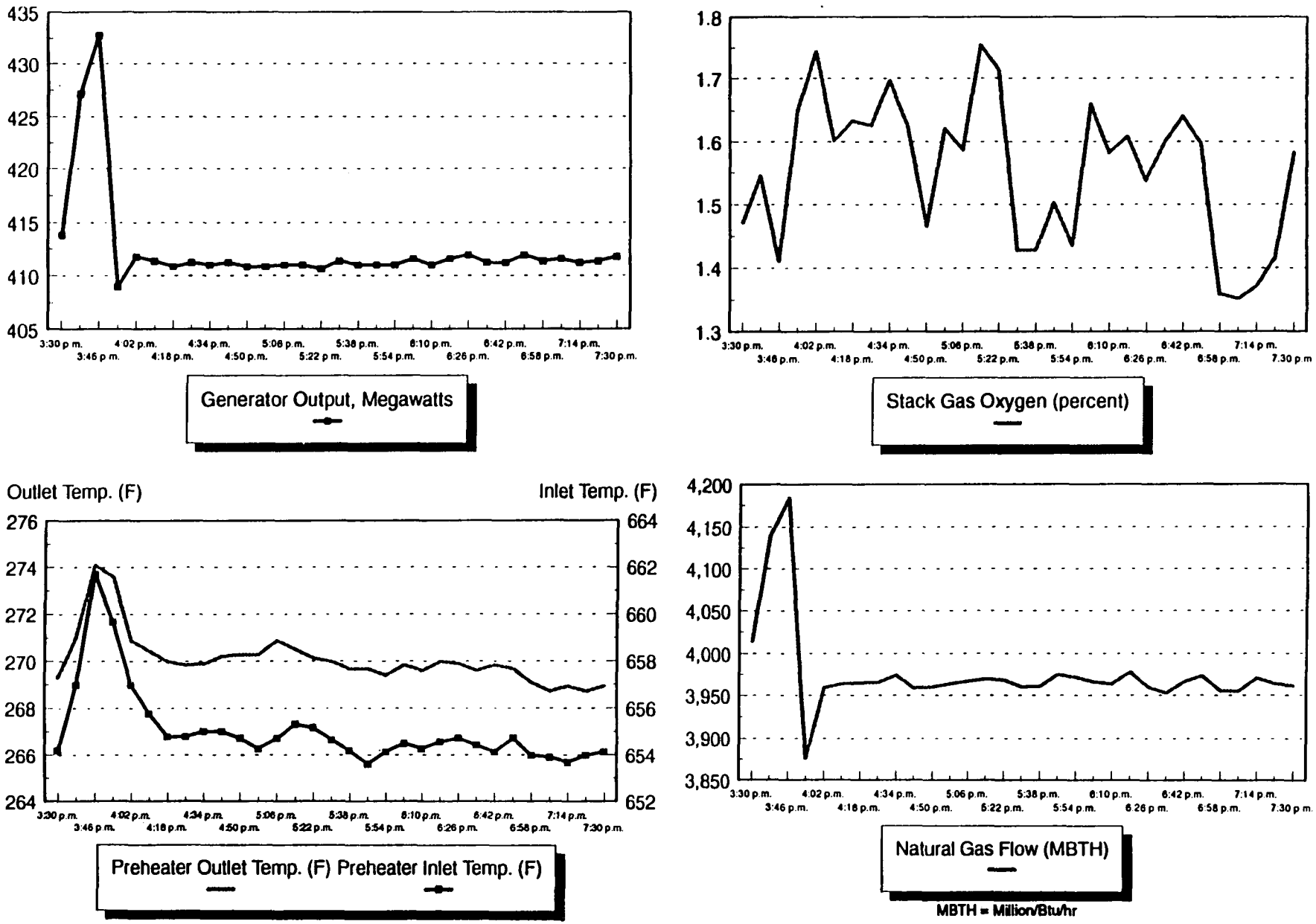

Figure 3-2. Houston Lighting & Power Co. Greens Bayou Unit Five, Test #2, (5/20/93, 3:30 p.m.-7:30 p.m.)

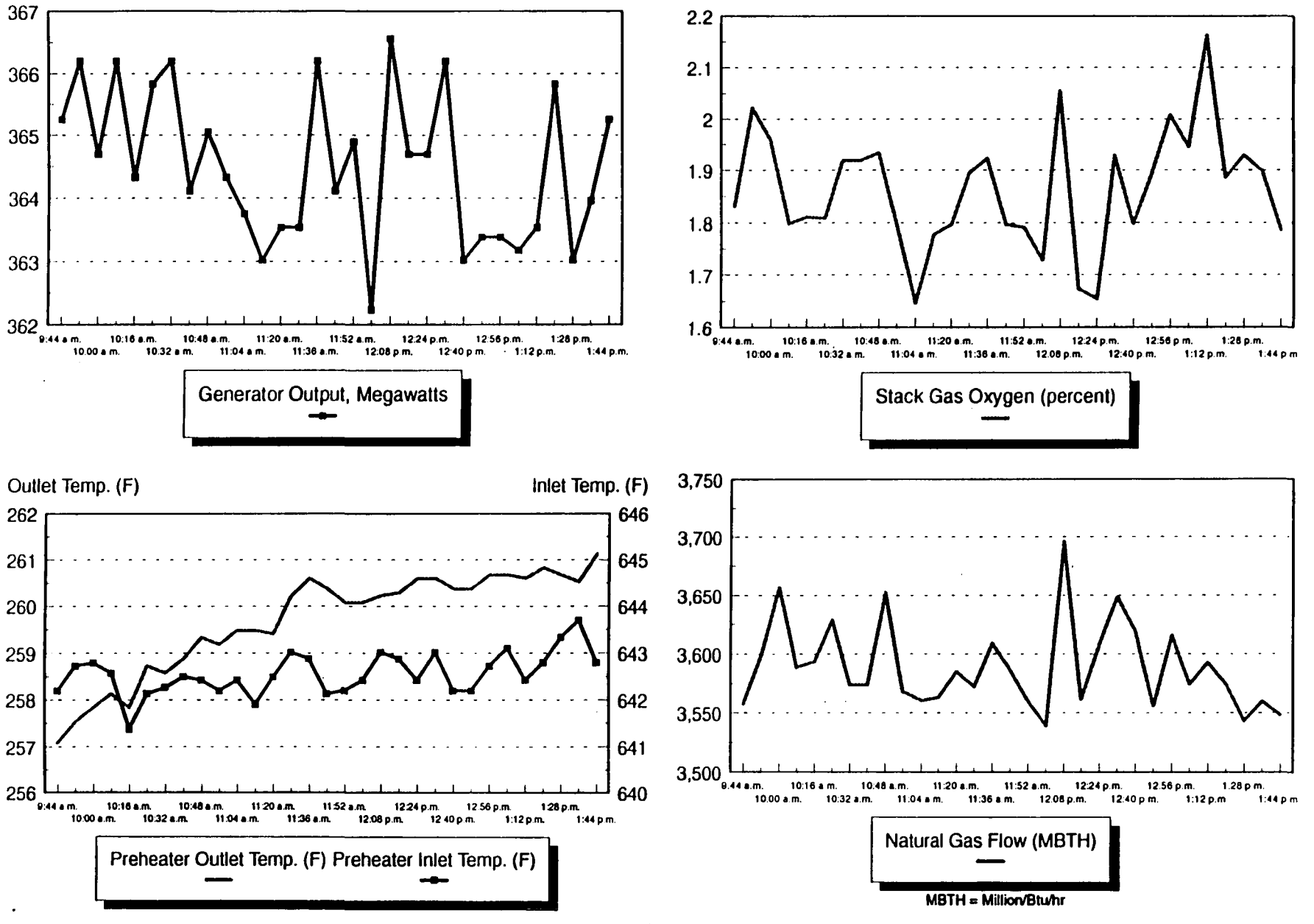

Figure 3-3. Houston Lighting & Power Co. Greens Bayou Unit Five, Test #3, (5/21/93, 9:44 a.m.-1:44 p.m.)

4.0 SAMPLING AND ANALYTICAL PROCEDURES

The FTIR analysis uses two different techniques. The first, referred to as direct gas phase analysis, involves transporting the gas stream to the sample manifold and directly to the infrared cell. This technique provides a sample similar in composition to the flue gas stream at the sample point location. Some compounds may be affected because of contact with the sampling system components or reactions with other species in the gas. A second technique, referred to as sample concentration, involves concentrating the sample by passing a measured volume through an absorbing material (Tenax®) packed into a U-shaped stainless steel collection tube. After sampling, the tube is heated to desorb any collected compounds into the FTIR cell. The desorbed sample is then diluted with nitrogen to one atmosphere total pressure within the cell. Concentrations of any species detected in the absorption cell are related to flue gas concentrations by comparing the volume of gas collected to the volume of the FTIR cell. Desorption into the smaller FTIR cell volume provides a volumetric concentration. This, in turn, provides a corresponding increase in sensitivity for the detection of any species that can measured using Tenax®. Sample concentration makes it possible to achieve lower detection limits for some HAPs.

Infrared absorbance spectra of gas phase and concentrated samples were recorded and analyzed. In conjunction with the FTIR sample analyses, measurements of HC, CO, O_2, and CO_2 were obtained using EPA instrumental test methods. Components of the emission test systems used by Entropy for this testing program are described below.

4.1 EXTRACTIVE SYSTEM FOR DIRECT GAS PHASE ANALYSIS

An extractive system was used to transport the gas stream from the stack directly to the infrared absorbance cell. Figure 4-1 illustrates the sampling system used for both FTIR gas phase analysis and EPA instrumental test methods.

4.1.1 Sampling System

Flue gas was extracted through a stainless steel probe. A Balston® particulate filter rated at 1 micron was installed at the outlet of the sample probe. Heated 3/8-inch O.D. Teflon® sample line connected the probe to the heated sample pump (KNF Neuberger, Inc. model number N010 ST.111) located inside the mobile laboratory. A 150-ft length of Teflon® sample line was sufficient to reach the FTIR truck. The temperature of the sampling system components was maintained at about 300°F. Digital temperature controllers were used to control and monitor the temperature of the transport lines. All connections were wrapped with electric heat tape and insulated to ensure that there were no "cold spots" in the sampling system where condensation might occur. All components of the sample system were constructed of Type 316 stainless steel or Teflon®. The heated sample flow manifold, located within the FTIR truck, included a secondary particulate filter and valves that allowed the operator to send sample gas directly to the absorption cell or through a gas conditioning system.

The extractive system can deliver three types of samples to the absorption cell. Sample sent directly to the FTIR cell is considered unconditioned, or "hot/wet." This sample is thought to be most representative of the actual effluent composition. The removal of water vapor from the gas stream before analysis was sometimes desirable; therefore, a second type of sample was provided by directing gas through a condenser system. The condenser employed a standard Peltier dryer to cool the gas stream to approximately 38°F. The resulting condensate was collected in two traps and removed from the conditioning system with peristaltic pumps. This technique is known to leave the concentrations of inorganic and highly volatile compounds very near to the (dry-basis) stack concentrations. A third type of sample was obtained by passing the gas stream through a series of PermaPure® dryers. This system utilized a network of semi-permeable membranes. Water vapor was drawn through the membrane walls by a concentration gradient, which was established by a counter flow of dry air along the outside of the membrane walls. In addition to protecting the absorption cell, water removal relieved spectral interferences, which could limit the effectiveness of the FTIR analysis for particular compounds.

4.1.2 Analytical System

The FTIR equipment used in this test consists of a medium-resolution interferometer, heated infrared absorption cell, liquid nitrogen cooled mercury cadmium telluride (MCT) broad band infrared detector, and computer. The interferometer, detector, and computer were purchased from KVB/Analect, Inc., and comprise their base Model RFX-40 system. The nominal spectral resolution of the system is one wavenumber (1 cm^{-1}). Samples were contained in a model 5-22H infrared absorption cell manufactured by Infrared Analysis, Inc. The inside walls and mirror housing of the cell were Teflon® coated. Cell temperature was maintained at 240°F using heated jackets and temperature controllers. The absorption path length of the cell was set at 22 meters. Figure 4-2 shows the arrangement of the FTIR instrumentation.

4.1.3 Sample Collection Procedure

During all three runs, gas phase and sample concentration testing were performed concurrently at the stack. During a test run, flue gas was continuously flowed through the heated system to the sample manifold in the FTIR truck. A portion of the gas stream was diverted to a secondary manifold located near the inlet of the FTIR absorption cell. The cell was filled with sample to ambient pressure and the FTIR spectrum recorded. After analysis, the cell was evacuated so that a subsequent sample could be introduced. The process of collecting and analyzing a sample and then evacuating the cell to prepare for the next sample required less than 10 minutes. During each run, about 12 gas phase samples were analyzed.

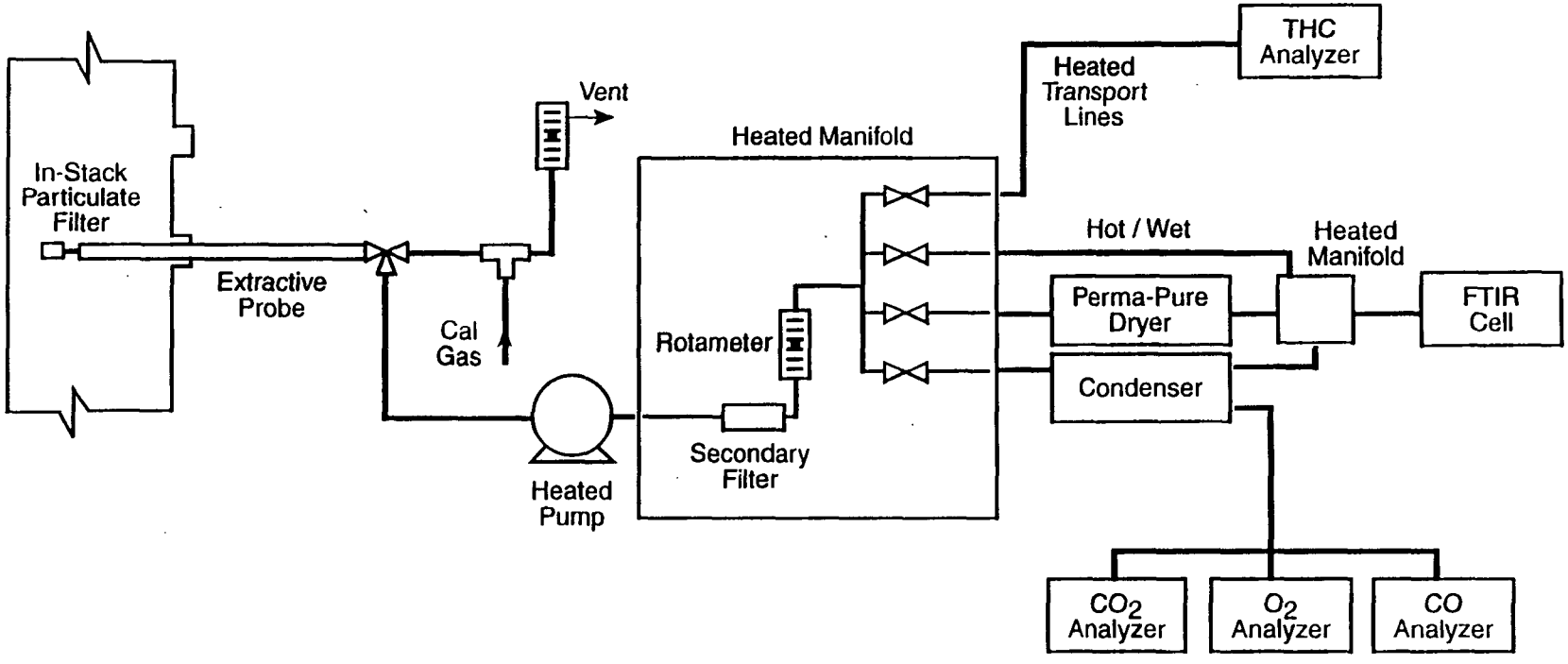

Figure 4-1. Direct extraction gas handling system.

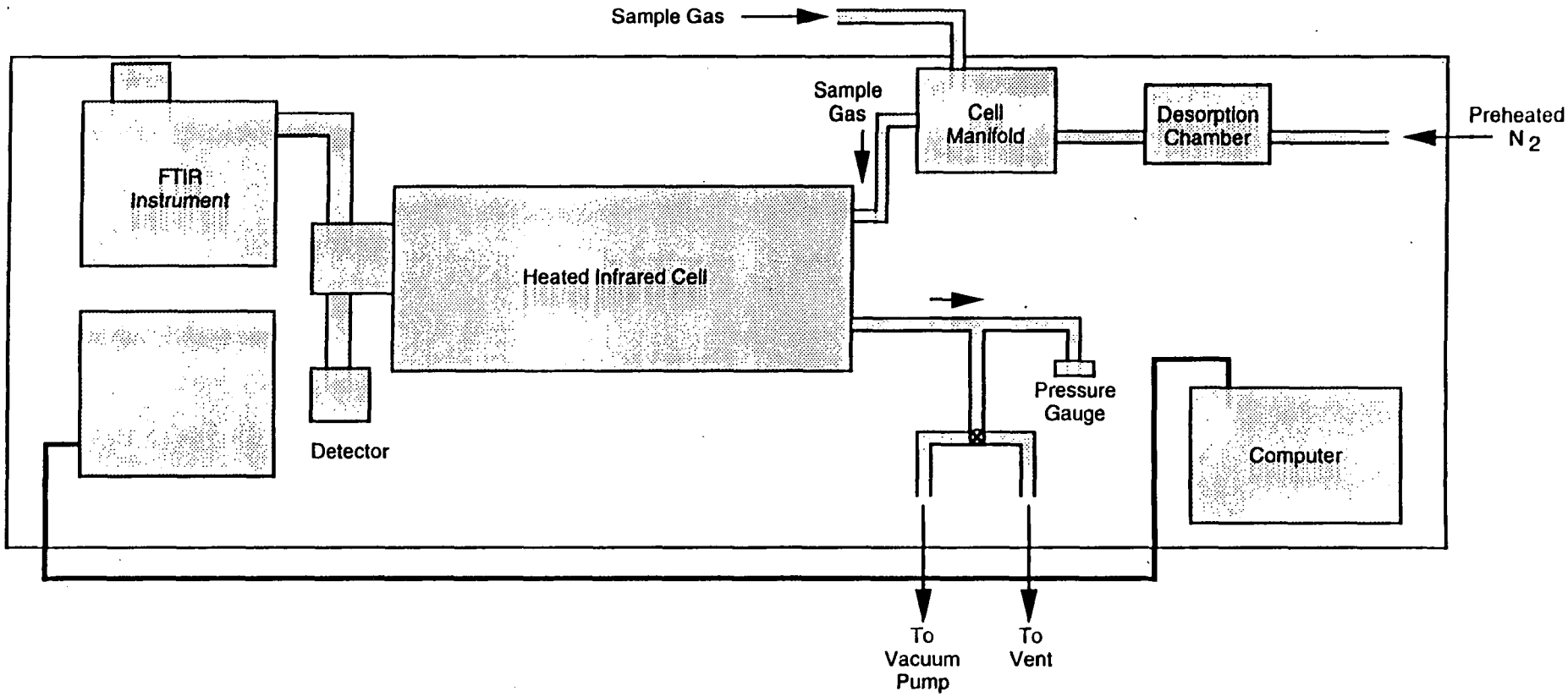

Figure 4-2. Top view of FTIR measurement system.

4.2 SAMPLE CONCENTRATION

Sample concentration was performed using the adsorbent material Tenax®, followed by thermal desorption into the FTIR cell. The sample collection system employed equipment similar to that of the Modified Method 5 sample train.

4.2.1 Sampling System

Figure 4-3 depicts the apparatus used in this test program. Components of the sampling train included a heated stainless steel probe, heated filter and glass casing, stainless steel air-cooled condenser, stainless steel adsorbent trap in an ice bath, followed by two water-filled impingers, one knockout impinger, an impinger filled with silica gel, sample pump, and a dry gas meter. All heated components were kept at a temperature above 120°C to ensure no condensation of water vapor within the system. The stainless steel condenser coil was used to pre-cool the sample gas before it entered the adsorbent trap. The trap was a specially designed stainless steel U-shaped collection tube filled with 10 g of Tenax® and plugged at both ends with glass wool. Stainless steel was used for the construction of the adsorbent tubes because it gives a more uniform and more efficient heat transfer than glass.

Each sampling run was conducted for 4 hours at approximately 0.12 to 0.17 dcfm for a total sampled volume between 30 and 40 dcf. The sampling rate was close to the maximum that can be achieved with the sampling system and collection times provided a volumetric concentration that is proportional to the amount of gas sampled. The resulting increase in sensitivity allowed detection to sub-ppm concentrations for some compounds.

4.2.2 Analytical System

Sample tubes were analyzed using thermal desorption-FTIR. The sample tubes were wrapped with heat tape and placed in an insulated chamber. One end of the sample tube was connected to the inlet of the evacuated FTIR absorption cell. The same end of the tube that served as the inlet during the sample concentration run served as the outlet for the thermal desorption. Gas samples were desorbed by heating the Tenax® to 250°C. A preheated stream of UPC grade nitrogen was passed through the adsorbent to carry desorbed compounds into the FTIR absorption cell. About 7 liters of nitrogen at 240°F was required to carry the desorbed gases to the cell and bring the total pressure of the FTIR sample to ambient pressure. The infrared absorption spectrum was then recorded. The purging process was repeated until no evidence of additional sample desorption was noted in the infrared spectrum.

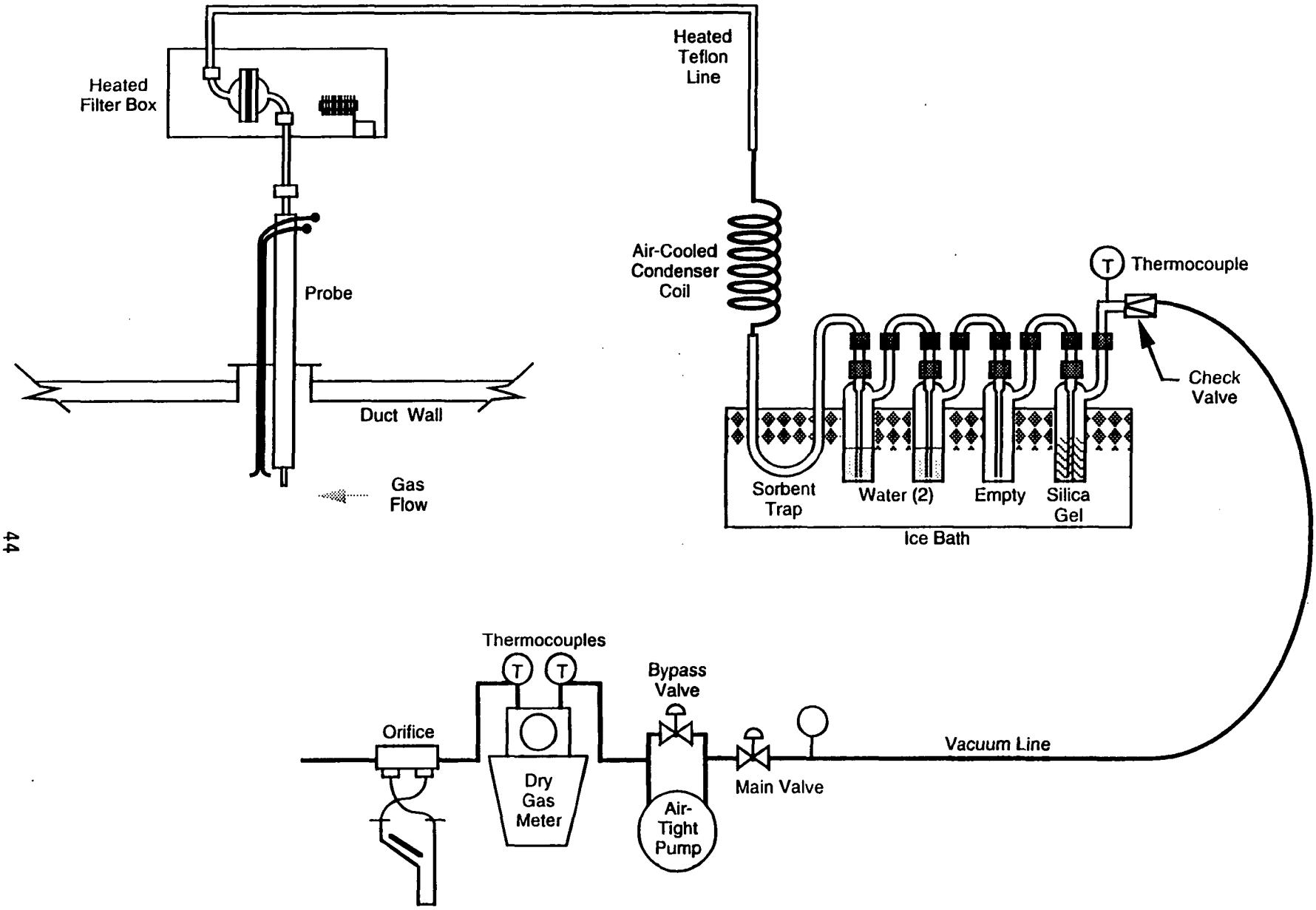

Figure 4-3. Sample concentration sampling system.

4.2.3 Sample Collection Procedure

The sample concentration test apparatus was set up at the location after the test team performed leak checks of the system. The sample flow, temperature of the heated box, and the tube outlet temperature were monitored continuously and recorded at 10-minute intervals during each run. At the end of each run flow was interrupted and the charged collection tube was removed. The open ends were tightly capped and the tube was stored on ice until it was analyzed. In most cases, the tubes were analyzed within several hours after the sample run.

4.3 CONTINUOUS EMISSIONS MONITORING

Entropy's extractive measurement system and the sampling and analytical procedures used for the determinations of HC, CO, O_2, and CO_2 conform with the requirements of EPA Test Methods 25A, 10, and 3A, respectively, of 40 CFR 60, Appendix B. A heated sampling system and a set of gas analyzers were used to analyze flue gas samples extracted at the exhaust stack. The CO, CO_2, and O_2 analyzers received gas samples delivered from the same sampling system that supplied the FTIR cell with condenser sample. These gas analyzers require that the flue gas be conditioned to eliminate any possible interference (i.e., water vapor and particulate matter) before being transported and analyzed. The HC analyzer received hot/wet sample. All components that contact the gas sample were either Type 316 stainless steel or Teflon®.

A gas flow distribution manifold downstream of the heated sample pump was used to control the flow of sample gas to each analyzer. A refrigerated condenser removed water vapor from the sample gas analyzed by all the analyzers except for the HC analyzer (Method 25A requires a wet basis analysis). The condenser was operated at approximately 38°F. The condensate was continuously removed from the traps within the condenser to minimize contact between the gas sample and the condensate.

The sampling system included a calibration gas injection point immediately upstream of the analyzers for the calibration error checks and also at the outlet of the probe for the sampling system bias and calibration drift checks. The mid- and high-range calibration gases were certified by the vendor according to EPA Protocol 1 specifications. Methane in air was used to calibrate the HC analyzer.

Table 4-1 presents a list of the analyzers that Entropy used during the test program to quantify the gas concentration levels at the sample point locations. Figure 4-1 is a simplified schematic of Entropy's reference measurement system.

TABLE 4-1. GAS ANALYZERS USED DURING THE TEST PROGRAM

PARAMETER (RANGE)	ANALYZER	ANALYTICAL TECHNIQUE
HC (0-10 ppm_w)	Ratfisch Model RS255CA	Flame ionization detector (FID)
CO (0-100 ppm_d)	Thermo Environmental Model 48	Infrared gas filter correlation (GFC)
CO_2 (0-20%$_d$)	Fuji Model 3300	Non-dispersive infrared (NDIR)
O_2 (0-25%$_d$)	Teledyne 320P-4	Micro-fuel cell

A computer-based data acquisition system was used to provide an instantaneous display of the analyzer responses, as well as compile the measurement data collected each second, calculate data averages over selected time periods, calculate emission rates, and document the measurement system calibrations.

The test run values are determined from the average concentration measurements displayed by the gas analyzers during the run and are adjusted based on the zero and upscale sampling system bias check results using the equation presented in Section 8 of Method 6C.

4.4 FLOW DETERMINATIONS

Because the measurement location on the stack does not satisfy EPA Method 1 criteria, flue gas volumetric flow was determined using mass balance calculations based on the natural gas fuel usage rate, fuel composition, and exhaust gas diluent concentrations (see below). The flow rate calculations are based on the use of F-factors as outlined in EPA Method 19 (40 CFR 60).

The natural gas feed rate to the boiler was a process parameter recorded by the RTI representative during the test program. The rates were recorded at 15-minute intervals and then averaged for each test run period. Greens Bayou personnel supplied EPA with fuel analysis data so that the gross calorific value (GCV, in units of Btu/ft^3) and F_d-factor (in units of dry standard cubic feet of combustion gas generated per million Btu of heat input, dscf/mmBtu) could be determined for the computation of the flue gas volumetric flow rates.

During the sampling runs, an S-type pitot tube was positioned adjacent to the point where the sample concentration probe was inserted. Single point ΔP values were recorded at 10 minute intervals to verify that flow characteristics, at the sampling point, were not changing significantly during the test run.

Heat consumption of the boiler was one of the process parameters recorded by the RTI representative at 8-minute intervals during the test periods.

The dry exhaust gas flow rate was calculated according to EPA Method 19 procedures:

$$DSCFH = F_d \times \frac{20.9}{20.9 - \%O_{2d}} \times HC \qquad (1)$$

where:

F_d = Dry basis F-factor (dscf/mmBtu) determined from fuel analysis
$\%O_{2d}$ = Dry basis concentration measurement from EPA Method 3A
HC = Heat consumption (mmBtu/hr)

4.5 PROCESS OBSERVATIONS

During the test, a representative from Research Triangle Institute (RTI) monitored the process operations so that emissions test data could be correlated with process data.

4.6 ANALYTICAL PROCEDURES

4.6.1 Description of K-Matrix Analyses

K-type calibration matrices were used to relate absorbance to concentration. Several descriptions of this analytical technique can be found in the literature[2]. The discussion presented here follows that of Haaland, Easterling, and Vopicka[3].

For a set of **m** absorbance reference spectra of **q** different compounds over **n** data points (corresponding to the discrete infrared wavenumber positions chosen as the analytical region) at a fixed absorption path length b, Beer's law can be written in matrix form as

$$\mathbf{A} = \mathbf{KC} + \mathbf{E} \qquad (2)$$

where:

A = The **n** x **m** matrix representing the absorbance values of the **m** reference spectra over the **n** wavenumber positions, containing contributions from all or some of the **q** components;

K = The **n** by **q** matrix representing the relationship between absorbance and concentration for the compounds in the wavenumber region(s) of interest, as represented in the reference spectra. The matrix element $K_{nq} = ba_{nq}$, where a_{nq} is the absorptivity of the **q**th compound at the nth wavenumber position;

C = The **q** x **m** matrix containing the concentrations of the **q** compounds in the **m** reference spectra;

E = The n x m matrix representing the random "errors" in Beer's law for the analysis; these errors are not actually due to a failure of Beer's law, but actually arise from factors such as misrepresentation (instrumental distortion) of the absorbance values of the reference spectra, or inaccuracies in the reference spectrum concentrations.

The quantity which is sought in the design of this analysis is the matrix **K**, since if an approximation to this matrix, denoted by $\underline{K}$, can be found, the concentrations in a sample spectrum can also be estimated. Using the vector A^* to represent the n measured absorbance values of a sample spectrum over the wavenumber region(s) of interest, and the vector $\underline{C}$ to represent the j estimated concentrations of the compounds comprising the sample, $\underline{C}$ can be calculated from A^* and $\underline{K}$ from the relation

$$\underline{C} = [K^t K]^{-1} K^t A^* . \tag{3}$$

Here the superscript t represents the transpose of the indicated matrix, and the superscript -1 represents the matrix inverse.

$$K = AC^t [CC^t]^{-1} \tag{4}$$

The standard method for obtaining the best estimate **K** is to minimize the square of the error terms represented by the matrix **E**. The equation represents the estimate $\underline{K}$ which minimizes the analysis error.

Reference spectra for the K-matrix concentration determinations were de-resolved to 1.0 cm^{-1} resolution from existing 0.25 cm^{-1} resolution reference spectra. This was accomplished by truncating and re-apodizing the interferograms of single beam reference spectra and their associated background interferograms. The processed single beam spectra were recombined and converted to absorbance (see Section 4.3).

4.6.2 Preparation of Analysis Programs

To provide accurate quantitative results, K-matrix input must include absorbance values from a set of reference spectra which, added together, qualitatively resemble the appearance of the sample spectra. For this reason, all of the Multicomp analysis files included spectra representing interferant species and criteria pollutants present in the flue gas.

A number of factors affect the detection and analysis of an analyte in the stack gas matrix. One factor is the composition of the stack gas. The major spectral interferants in the gas-fired boiler effluent are water and CO_2. At CO_2 concentrations of about 10 percent and higher, weak absorption bands that are not visible at lower concentrations can interfere with the

spectral analysis if not accounted for. Some portions of the FTIR spectrum were not available for analysis because of extreme absorbance levels of water and CO_2, but most compounds exhibit at least one absorbance band that is suitable for analysis. Measurable amounts of NO and NO_2 were also present in the samples and these species needed to be accounted for in any analysis program. A second factor affecting analyses is the number of analytes that are to be detected.

A set of Multicomp program files had been previously prepared for analysis of data collected at a coal-fired utility for the purpose of performing statistical validation testing of the FTIR methods. Separate programs were prepared to measure 47 different compounds. Four baseline subtraction points were specified for each analytical region, identifying an upper and a lower baseline averaging range. The absorbance data in each range were averaged, a straight baseline was calculated through the range midpoint using the average absorbance values, and the baseline was subtracted from the data prior to K-matrix analysis.

Before K-matrix analysis was applied to data all of the spectra were inspected to determine what species had been detected. Analysis program files were constructed that included reference spectra representing the detected species. The program files were then used to calculate concentrations of the detected species. Sample concentration spectra were also analyzed using program files that were shown by the validation testing to be suitable for measuring their corresponding compounds.

4.6.3 Error Analysis of data

The principal constituents of the gas phase samples were water, CO_2, NO, and NO_2. A separate multicomp program was prepared to quantify each of these compounds. Other than these species and N_2O no major absorbance features were observed in the spectra. After concentrations of the four main constituents were determined, the appropriate standard was scaled and subtracted from the spectrum of the mixture. This helped verify the calculated values. New spectra were generated from the original absorbance spectra by successively subtracting scaled standard spectra of water, CO_2, NO, and NO_2. The resulting "subtracted" spectra were analyzed for detectible absorbencies of any HAPs and, for undetected species, the maximum possible concentrations that could be present in the samples.

Maximum possible concentrations were determined in several steps. the noise level in the appropriate analytical region was quantified by calculating the root mean square deviation (RMSD) of the baseline in the subtracted spectrum. The RMS noise was multiplied by the width (in cm^{-1}) of the analytical region to give an equivalent "noise area" in the subtracted spectrum. This value was compared to the integrated area of the same analytical region in a standard spectrum of the pure compound. The noise was calculated from the equation:

$$RMSD = \left[\left(\frac{1}{n}\right) \sum_{i=1}^{n} (A_i - A_M)^2 \right]^{\frac{1}{2}} \qquad (5)$$

where:

RMSD = Root mean square deviation in the absorbance values within a region.

n = Number of absorbance values in the region.

A_i = Absorbance value of the ith data point in the analytical region.

A_M = Mean of all the absorbance values in the region.

If a species is detected, then the error in the calculated concentration is given by:

$$E_{ppm} = \frac{RMSD \times (x_2 - x_1)}{Area_R} \times CON_R \qquad (6)$$

where:

E_{ppm} = Noise related error in the calculated concentration, in ppm.

x_2 = Upper limit, in cm^{-1}, of the analytical region.

x_1 = Lower limit, in cm^{-1}, of the analytical region.

$Area_R$ = Total band area (corrected for path length, temperature, and pressure) in analytical region of reference spectrum of compound of interest.

CON_R = Known concentration of compound in the same reference spectrum.

This ratio provided a concentration equivalent to measured area in the subtracted spectrum. For instances when a compound was not detected, the value E_{ppm} was equivalent to the minimum detectible concentration of that (undetected) species in the sample.

Some concentrations given in tables 3-4 to 3-6 are relatively high (greater than 10 ppm) and there are several possible reasons for this.

- The reference spectrum of the compound may show low absorbance at relatively high concentrations so that its real limit of detection is high. An example of this may be acetonitrile.

- The region of the spectrum used for the analysis may have residual bands or negative features resulting from the spectral subtraction. In these cases the absorbance of the reference band may be large at low concentrations, but the RMS deviation is also large (see Equation 7). Drier spectra give significant improvement because it is easier to perform good spectral subtraction on spectra where absorbance from

water bands is weaker.

- The chosen analytical region may be too large, unnecessarily including regions of noise where there is no absorbance from the compound of interest.

In the second and third cases the stated maximum possible concentration can be lowered by choosing a different analytical region, generating better subtracted spectra or narrowing the limits of the analytical region. Entropy has already taken these steps with a number of compounds. If more improvements can be made, they will be included in the final report.

4.6.4 Concentration Correction Factors

Calculated concentrations in sample spectra were corrected for differences in absorption path length between the reference and sample spectra according to the following relation:

$$C_{corr} = \left(\frac{L_r}{L_s}\right) \times \left(\frac{T_s}{T_r}\right) \times (C_{calc}) \qquad (7)$$

where:

C_{corr} = the path length corrected concentration.

C_{calc} = the initial calculated concentration (output of the Multicomp program designed for the compound)

L_r = the path length associated with the reference spectra.

L_s = the path length (22m) associated with the sample spectra.

T_s = the absolute temperature of the sample gas (388 K).

T_r = the absolute gas temperature at which reference spectra were recorded (300 to 373 K).

Corrections for variation in sample pressure were considered, and found to affect the indicated HAP concentrations by no more that one to two percent. Since this is a small effect in comparison to other sources of analytical, no sample pressure corrections were made.

4.6.5 Analysis of Sample Concentration Spectra

Sample concentration spectra were analyzed in the same manner as spectra of the gas phase samples. To derive flue gas concentrations it was necessary to divide the calculated concentrations by the concentration factor (C_F). As an illustration, suppose that 10 ft^3 (about 283 liters) of gas were sampled and then desorbed into the FTIR cell volume of approximately 8.5 liters to give concentration factor of about 33. If some compound was detected at a

concentration of 50 ppm in the cell, then its corresponding flue gas concentration was about 1.5 ppm. When determining the concentration factor it was also important to consider that the dry gas meter was cool relative to the FTIR cell. Also, the total sampled volume was measured after most of the water was removed. The total volume of gas sampled was determined from the following relation:

$$V_{flue} = \left(\frac{V_{col}}{T_{col}}\right) \times \left(\frac{T_{flue}}{1-W}\right) \tag{8}$$

where:

V_{flue} = Total volume of flue gas sampled.

V_{col} = Volume of gas sampled as measured at the dry gas meter after it passed through the collection tube.

T_{flue} = Absolute temperature of the flue gas at the sampling location.

T_{col} = Absolute temperature of the sample gas at the dry gas meter.

W = Fraction (by volume) of flue gas stream that was water vapor.

The concentration factor, CF, was then determined using V_{flue} and the volume of the FTIR cell (V_{cell}) which was measured at an absolute temperature (T_{cell}) of about 300 K:

$$CF = \left(\frac{V_{flue}}{V_{cell}}\right) \times \left(\frac{T_{cell}}{T_{flue}}\right) \tag{9}$$

Finally, the in-stack concentration was determined using CF and the calculated concentration of the sample contained in the FTIR cell, C_{cell}.

$$C_{flue} = \frac{C_{cell}}{CF} \tag{10}$$

5.0 INTERNAL QUALITY ASSURANCE/QUALITY CONTROL ACTIVITIES

Quality assurance (QA) is defined as a system of activities that provides a mechanism of assessing the effectiveness of the quality control procedures. It is a total integrated program for assuring the reliability of monitoring and measurement data. Quality control (QC) is defined as the overall system of activities designed to ensure a quality product or service. This includes routine procedures for obtaining prescribed standards of performance in the monitoring and measurement process.

The specific internal QA/QC procedures that were used during this test program to facilitate the production of useful and valid data are described in this section. Each procedure was an integral part of the test program activities. Section 5.1 covers method-specific QC procedures for the manual flue gas sampling. Section 5.2 covers the QC procedures used for the instrumental methods. QC checks of data reduction, validation and reporting procedures are covered in Section 5.3, and corrective actions are discussed in Section 5.4.

5.1 QC PROCEDURES FOR MANUAL FLUE GAS TEST METHODS

This section details the QC procedures that were followed during the manual testing activities.

5.1.1 Sample Concentration Sampling QC Procedures

QC procedures that allowed representative collection of organics by the sample concentration sampling system were:

- Only properly cleaned glassware and prepared adsorbent tubes that had been kept closed with stainless steel caps were used for any sampling train.
- The filter, Teflon® transfer line, and adsorbent tube were maintained at ±10°F of the specified temperatures.
- An ambient sample was analyzed for background contamination.

The QC procedures that were followed in regards to accurate sample gas volume determination are:

- The dry gas meter is fully calibrated every 6 months using an EPA approved intermediate standard.
- Pre-test and post-test leak checks were completed and were less than 0.02 cfm or 4 percent of the average sample rate.
- The gas meter was read to a thousandth of a cubic foot for the initial and final readings.
- Readings of the dry gas meter and meter temperatures were taken every 10 minutes during sample collection.

- Accurate barometric pressures were recorded at least once per day.

- Post-test dry gas meter checks were completed to verify the accuracy of the meter full calibration constant (Y).

5.1.2 Manual Sampling Equipment Calibration Procedures

5.1.2.1 Temperature Measuring Device Calibration -- Accurate temperature measurements are required during source sampling. The bimetallic stem thermometers and thermocouple temperature sensors used during the test program were calibrated using the procedure described in Section 3.4.2 of EPA document 600/4-77-027b. Each temperature sensor is calibrated at a minimum of three points over the anticipated range of use against a NIST-traceable mercury-in-glass thermometer. All sensors were calibrated prior to field sampling.

5.1.2.2 Dry Gas Meter Calibration -- Dry gas meters (DGMs) were used in the sample trains to monitor the sampling rate and to measure the sample volume. All DGMs were fully calibrated to determine the volume correction factor prior to their use in the field. Post-test calibration checks were performed as soon as possible after the equipment was returned as a QA check on the calibration coefficients. Pre- and post-test calibrations should agree within 5 percent. The calibration procedure is documented in Section 3.3.2 of EPA document 600/4-77-237b.

5.2 QC PROCEDURES FOR INSTRUMENTAL METHODS

The flue gas was analyzed for CO, O_2, CO_2, and HC. Prior to sampling each day, a pre-test leak check of the sampling system from the probe tip to the heated manifold was performed and was less than 4 percent of the average sample rate. Internal QA/QC checks for the instrumental test method measurement systems are presented below.

5.2.1 Daily Calibrations, Drift Checks, and System Bias Checks

Method 3A requires that the tester : (1) select appropriate apparatus meeting the applicable equipment specifications of the method, (2) conduct an interference response test prior to the testing program, and (3) conduct calibration error (linearity), calibration drift, and sampling system bias determinations during the testing program to demonstrate conformance with the measurement system performance specifications. The performance specifications are identified in the following table.

TABLE 5-1. INSTRUMENTAL TEST METHOD SPECIFICATIONS.

PERFORMANCE TEST	SPECIFICATION
Analyzer Calibration Error	± 2% of span for zero, mid-, and high-range calibration gases
Sampling System Bias	± 5% of span for zero and upscale calibration gases
Zero Drift	± 3% of span over test run period
Upscale Calibration Drift	± 3% of span over test run period
Interference Check	± 7% of the modified Method 6 result for each run

A three-point (i.e., zero, mid-, and high-range) analyzer calibration error check is conducted before initiating the testing by injecting the calibration gases directly into the gas analyzers and recording the responses. Zero and upscale calibration checks are conducted both before and after each test run in order to quantify measurement system calibration drift and sampling system bias. Upscale is either the mid- or high-range gas, whichever most closely approximates the flue gas level. During these checks, the calibration gases are introduced into the sampling system at the probe outlet so that the calibration gases are analyzed in the same manner as the flue gas samples. Drift is the difference between the pre- and post-test run calibration check responses. Sampling system bias is the difference between the test run calibration check responses (system calibration) and the initial calibration error responses (direct analyzer calibration) to the zero and upscale calibration gases. If an acceptable post-test bias check result is obtained but the zero or upscale drift result exceeds the drift limit, the test run result is valid; however, the analyzer calibration error and bias check procedures must be repeated before conducting the next test run. A run is considered invalid and must be repeated if the post-test zero or upscale calibration check result exceeds the bias specification. The calibration error and bias checks must be repeated and acceptable results obtained before testing can resume.

Although not required by Methods 10 and 25A, the same calibration and data reduction procedures required by Method 3A were used for the CO and HC determinations to improve the quality of the reference data.

5.3 QA/QC CHECKS FOR DATA REDUCTION, VALIDATION, AND REPORTING

Data quality audits were conducted using data quality indicators which require the detailed review of: (1) the recording and transfer of raw data; (2) data calculations; (3) the documentation of procedures; and (4) the selection of appropriate data quality indicators.

All data and/or calculations for flow rates, moisture content, and sampling rates were spot checked for accuracy and completeness.

In general, all measurement data have been validated based on the following criteria:

- Acceptable sample collection procedures.
- Adherence to prescribed QC procedures.

Any suspect data have been identified with respect to the nature of the problem and potential effect on the data quality. Upon completion of testing, the field coordinator was responsible for preparation of a data summary including calculation results and raw data sheets.

5.3.1 Sample Concentration

The sample concentration custody procedures for this test program are based on EPA recommended procedures. Because collected samples were analyzed on-site, the custody procedures emphasize careful documentation of sample collection and field analytical data. Use of chain-of-custody documentation was not necessary, instead careful attention was paid to the sample identification coding. These procedures are discussed in more detail below.

Each spectrum of a sample concentration sample has been assigned a unique alphanumeric identification code. For example, Tgre130A designates a Tenax® spectrum of a sample collected during Run 1 at the stack using tube number 30. The A means this is the spectrum of the first desorption from this tube. Every adsorbent tube has been inscribed with a tube identification number.

The project manager was responsible for ensuring that proper custody and documentation procedures were followed for the field sampling, sample recovery, and for reviewing the sample inventory after each run to ensure complete and up-to-date entries. A sample inventory was maintained to provide an overview of all sample collection activities.

Two ambient samples were prepared. One was obtained before test began and a second after the test was completed. Ambient samples were run through the identical trains used in the test runs. This provided a check for contamination of the sampling train. The charged ambient tube was stored and analyzed in the same manner as those collected in the test runs. The volume of air drawn for the blanks was sufficient to verify that the sampling train was clean and performing properly. If relatively minor contamination was identified from the ambient sample, it was accounted for in the subsequent analysis of the sample spectrum using spectral subtraction. Major sources of contamination were not identified in any instance.

Sample flow at the dry gas meter was recorded at 10 minute intervals. Results from the analyzers and the spectra of the gas phase samples provided a check on the consistency of the effluent composition during the sampling period.

5.3.2 Gas Phase Analysis

During each test run a total of 12 gas phase samples were collected and analyzed. Each spectrum was assigned a unique file name and a separate data

sheet identifying sample location and sampling conditions. A comparison of all spectra in this data set provided information on the consistency of effluent composition and a real-time check on the performance of the sampling system. Effluent was directed through all sampling lines for at least 5 minutes and the CEM's provided consistent readings over the same period before sampling was attempted. This requirement was satisfied any time there was a switch to a different conditioning system. At times when the cell was evacuating, the FTIR signal was continuously monitored to provide a spectral profile of the empty cell. A new sample was not introduced until there was no residual absorbance remaining from the previous one. The signal was also monitored at times when the cell was being filled to provide a real-time check for significant contamination in the system.

5.3.3 FTIR Spectra

For a detailed description of QA/QC procedures relating to data collection and analysis, refer to the "Protocol For Applying FTIR Spectrometry in Emission Testing." A spectrum of the calibration transfer standard (CTS) was performed at the beginning and end of each data collection session. The CTS gas was 100 ppm ethylene in nitrogen. The CTS spectrum provide a check on the operating conditions of the FTIR instrumentation, e.g. spectral resolution and cell path length. Ambient pressure was recorded whenever a CTS spectrum was collected.

Two copies of all interferograms and processed spectra of backgrounds, samples, and the CTS were stored on separate computer disks. Additional copies of sample and CTS absorbance spectra were also stored for use in the data analysis. Sample spectra can be regenerated from the raw interferograms, if necessary. FTIR spectra are available for inspection or reanalysis at any future date.

Pure, dry ("zero") air was periodically introduced through the sampling system to check for contamination. On two occasions water was condensed in the FTIR manifold. The lines and cell were purged with zero air, or dry N_2. On one occasion, after the condensed water was removed, absorbance bands were observed near 2900 cm^{-1} in the subsequent FTIR sample. It was determined that these absorbances were not caused by anything in the flue gas, but were attributed to contamination that had been carried into the cell during the purging process and remained after the sample was pumped away. This was corrected by taking a new background spectrum.

The position and slope of the spectral base line were monitored as successive spectra were collected. If the base line within a data set for a particular sample run began to deviate by more than 5 percent from 100 percent transmittance, a new background was collected.

5.4 CORRECTIVE ACTIONS

It was the responsibility of the project manager and the team members to see that data collection procedures were followed as specified and that measurement data met the prescribed acceptance criteria. No major corrective actions were necessary

6.0 CONCLUSIONS

Entropy performed an emission test using FTIR spectrometry at Greens Bayou Unit 5 gas-fired boiler in Houston, Texas. Gas phase analysis and sample concentration measurements were performed over two days. Gas analyzers were used to measure CO, O_2, CO_2, and hydrocarbons. Three 4-hour sample concentrations run were performed at the stack. Gas phase analysis and CEM measurements were performed during the sample concentration runs.

No significant levels of HAPs were measured using FTIR to analyze gas phase samples, but NO was detected. NH_3 and HCl were detected in sample concentration spectra. Other unidentified bands were observed in the sample from sample concentration Run 2 and $CFCl_3$, which may be a contaminant, was detected in the sample from Run 1.

A primary goal of this project was to use FTIR instrumention in a major test program to measure as many HAPs as possible or to place upper limits on their concentrations. Four other electric utilities were tested along with the Greens Bayou facility. Utilities present a difficult testing challenge for two reasons:

1) They are combustion sources so the flue gas contains high levels of moisture and CO_2 (both are spectral interferants).

2) The large volumetric flow rates typical of these facilities can lead to mass emissions above regulated limits even for HAPs at very low concentrations. This places great demand on the measurement method to achieve low detection limits. Furthermore, with natural gas as the combustion fuel, concentrations of any HAPs formed in the process would be expected to be very low.

This represents the first attempt to use FTIR spectroscopy in such an ambitious test program. The program accomplished very significant achievements and demonstrated important and fundamental advantages of FTIR spectroscopy as an emissions test method:

- Using a single method quantitative data were provided for over 100 compounds.

- Software was written to analyze a large data set and provide concentration and detection limit results quickly. The same or similar software can be used for subsequent tests with very little investment of time for minor modifications or improvements.

- The original data are permanently stored so the results can be rechecked for verification at any time.

- A single method was used to obtain both time-resolved (direct gas) and integrated (sample concentration) measurements of gas streams from two locations simultaneously.

- The two techniques of the FTIR method cover different concentration

ranges.

- Preliminary data (qualitative and quantitative) are provided on-site in real time.

- With little effort at optimization (see below), detection limits in the ppb range were calculated for 29 HAPs and less than 5 ppm for 70 HAPs using direct gas phase measurements of hot/wet samples, which present the most difficult analytical challenge. Sample concentration provided even lower detection limits for some HAPs.

- A compound detect is unambiguous.

It is appropriate to include some discussion about the "maximum possible concentrations" presented in Tables 3-4 to 3-6. These numbers were specifically not labeled as detection limits because use of that term could be misinterpreted, but they will be referred to as "detection limits" in the discussion below.

In FTIR analysis detection limits are calculated directly from the spectra (see Section 4.6.3 and the "FTIR Protocol"). These calculated numbers do not represent fundamental measurement limits, but they depend on a number of factors. For example:

Some instrumental factors

- Spectral resolution.
- Source intensity.
- Detector response and sensitivity.
- Path length that the infrared beam travels through the sample.
- Scan time.
- Efficiency of infrared transmission (through-put).
- Signal gain.

Some sampling factors

- Physical and chemical properties of a compound.
- Flue gas composition.
- Flue gas temperature.
- Flue gas moisture content.
- Length of sample line (distance from location).

- Temperature of sampling components.
- Sample flow.

Instrumental factors are adjustable. For this program instrument settings were chosen to duplicate conditions that were successfully used in previous screening tests and the validation test. These conditions provide speed of analysis, durability of instrumentation, and the best chance to obtain measurements of the maximum number of compounds with acceptable sensitivity. Sampling factors present the same challenges to any test method.

An additional consideration is that the maximum possible concentrations are all higher than the true detection limits that can be calculated from the 1 cm^{-1} data collected at Greens Bayou. This results from the method of analysis: the noise calculations were made only after all spectral subtractions were completed. Each spectral subtraction adds noise to the resulting subtracted spectrum. For most compounds it is necessary to perform only some (or none) of the spectral subtractions before its detection limit can be calculated. With more sophisticated software it will be possible to automate the process of performing selective spectral subtractions and optimize the detection limit calculation for each compound. (Such an undertaking was beyond the scope of the current project.) Furthermore, the detection limits represent averages compiled from the results of all the spectra collected at the sampling location. A more realistic detection limit is provided by the single spectrum whose analysis gives the lowest calculated value. It would be more accurate to think of "maximum possible concentrations" as placing upper boundaries on the HAP detection limits provided by these data.

Another important sampling consideration is the sample composition. In Table 3-3 benzene's detection limit is quoted as 6.41 ppm. This was determined in the analytical region between 3036 and 3063 cm^{-1}. Benzene exhibits a much stronger infrared band at 673 cm^{-1} but this band was not used in the analysis because absorbance from CO_2 strongly interfered in this analytical region. At a lower CO_2 emission source an identical FTIR measurement system would provide a benzene detection limit below 1 ppm for direct gas analysis (even ignoring the consideration discussed in the previous paragraph).

Any difficulties associated with measuring particular compounds are related to the sampling conditions and not the FTIR analysis. The moisture content of the flue gas was estimated to be about 17 percent. This should have caused no problem with condensation in the sampling line. But water soluble species are more difficult to measure at higher moisture levels and a moisture content of 17 percent can present significant spectral interferances for some compounds. FTIR techniques still offer a good way to measure unstable or reactive species because FTIR spectrometry can be readily used to monitor the sampling system integrity. That was not done in this test because the primary goal was the general one of measuring as many compounds as possible, not optimizing the measurement system for any particular compound or set of compounds.

7.0 REFERENCES

1) "FTIR Method Validation at a Coal-Fired Boiler," EPA Contract No. 68D20163, Work Assignment 2, July, 1993.

2) "Computer-Assisted Quantitative Infrared Spectroscopy," Gregory L. McClure (ed.), **ASTM Special Publication 934** (ASTM), 1987.

3) "Multivariate Least-Squares Methods Applied to the Quantitative Spectral Analysis of Multicomponent Mixtures," **Applied Spectroscopy**, 39(10), 73-84, 1985.

4) "Fourier Transform Infrared Spectrometry," Peter R. Griffiths and James de Haseth, **Chemical Analysis**, **83**, 16-25,(1986), P. J. Elving, J. D. Winefordner and I. M. Kolthoff (ed.), John Wiley and Sons,.