United States
Environmental Protection
Agency

Office of Air Quality
Planning and Standards
Washington, DC 20460

EPA Publication No. 340/1-89-003
June 1989

Stationary Source Compliance Series

EPA

Field Inspector's Audit Techniques:

Gas CEMS's Which Accept Calibration Gases

340/1-89-003

Field Inspector's Audit Techniques: Gas CEMS's Which Accept Calibration Gases

Prepared by:

Wayne E. Reynolds
CEM/Engineering Division
Entropy Environmentalists, Inc.
Research Triangle Park, North Carolina 27709

EPA Contract 68-02-4462
Work Assignment No. 36

EPA Project Officer: Aaron Martin
EPA Work Assignment Manager:
Anthony P. Wayne

Prepared for:

UNITED STATES ENVIRONMENTAL PROTECTION AGENCY
Stationary Source Compliance Division
Office of Air Quality Planning and Standards
Washington, DC 20460

June 1989

DISCLAIMER

This material has been funded wholly or in part by the United States Environmental Protection Agency under Contract No 68-02-4462 to Entropy Environmentalists, Inc. It has been subjected to the Agency's peer and administrative review, and it has been approved for publication as an EPA document. Mention of trade names or commercial products does not constitute endorsement or recommendation for use.

TABLE OF CONTENTS

1. Overview 1

2. Planning 2
   2.1 Gather Information 2
   2.2 Determine Number of Audit Gases Per Channel 2
   2.3 Select Audit Gases 2
   2.4 Arrangements With Source 3
   2.5 Legal Authority and Liability 4

3. General Principles of Audit Gas Injection 5
   3.1 Audit Gas Injection for an Extractive CEMS 5
   3.2 Audit Gas Injection for a Point In-Situ CEMS 5

4. Conducting the Field Audit 15
   4.1 Audit Gas Injection 15
   4.2 Number of Gas Injections 15
   4.3 Data Recordkeeping 16

5. Post-Audit Activities 17
   5.1 Plot CEMS Response as Function of Audit Gas Concentration 17
   5.2 File Data 17
   5.3 Follow-Up Activities 17
   5.4 No Correction of Reported Emissions Data 17

6. Data Forms 18

1. OVERVIEW

This guideline* is for the use of control agency field inspectors in planning and conducting audits of continuous emission monitoring systems (CEMS's) for gaseous pollutants. The document includes:

- An outline of planning activities;
- An outline of principles for audit gas injection;
- Procedures for conducting a field audit;
- A discussion of post-audit activities; and
- Example data forms.

The audit procedures in this report:

- Are only applicable to gas CEMS's configured to accept cylinder gas injections; and
- Assume the availability of a source technician to assist with the audits as directed by the control agency field inspector.
- May be used to conduct cylinder gas audits (CGA's) of 40 CFR 60, Appendix F, Procedure 1, provided:

  (1) audit gases are selected according to Appendix F criteria, and

  (2) each gas is injected into the CEMS three times rather than two.

---

* Prepared under EPA Contract No. 68-02-4462, Task No. 36, by Entropy Environmentalists, Inc., Research Triangle Park, North Carolina.

2. PLANNING

Preparation for the audit should begin well in advance of the target audit date. If all audit gases are not on hand, a gas vendor will need at least 30 days lead time to prepare, analyze, and ship the gases. A Pre-Audit Data Form is provided in Section 6. Much of the necessary information will be on file at the Agency; the remainder can be obtained from the source contact. Major steps in the pre-audit preparation process are discussed below.

2.1 GATHER INFORMATION

Information that will be needed in the audit gas selection process includes:

1. the range of each gas measurement channel;
2. the typical concentration level of the effluent; and
3. effluent concentrations at the level of the applicable emissions standards.

Information regarding gas measurement ranges should be contained in the Performance Specification Test (PST) report on file at the agency. Information regarding typical effluent levels can usually be obtained from both the relative accuracy data in the PST report and the emissions reports or excess emissions reports on file at the agency. Pollutant concentrations at the level of the standard can be calculated from the emissions limits and typical diluent concentrations.

2.2 DETERMINE NUMBER OF AUDIT GASES PER CHANNEL

The goal of a CEMS audit is to determine whether the emissions data reported to the agency are of acceptable quality. This goal can be accomplished with one audit gas per measurement channel. Each additional audit gas provides valuable information regarding CEMS performance, but increases the overall cost of the audit. Two gases per channel are recommended for the audits discussed in this document.

2.3 SELECT AUDIT GASES

There are two points in the measurement range of a CEMS that are of primary concern: (1) the average effluent emissions level; and (2) the level of the standard. When the audit is conducted with a single audit gas for each channel, the concentration of this gas should approximate one of these levels.

When the audit is conducted with two gases per channel, these gases should bracket the effluent and emissions standard levels. Other acceptable criteria for audit gas values are as specified in Appendix F for Cylinder Gas Audits (CGA's). These criteria are:

Pollutants: 20-30% and 50-60% of span
O_2: 4-6% and 8-12% O_2
CO_2: 5-8% and 10-14% CO_2

Each audit gas in the agency inventory should be listed on the "Inspector's Quick Check Audit Gas Data Sheet"; an example data sheet is included in Section 6. Each gas should be given a label (e.g., "SO_2 #1," SO_2 #2," NO_x #1," etc.) for easy gas identification. The gas label and its certified concentration should be recorded in the appropriate columns. This data sheet can be taken into the field by the inspector. Accuracy acceptability can be determined at a glance by comparing the audit results to the error band on the gas data sheet.

Some or all of the audit gases should be designated as "blind" gases, and their exact concentrations should not be revealed to the source. The use of blind audit gases precludes the possibility of CEMS response data being intentionally biased to enhance apparent CEMS accuracy.

2.4 ARRANGEMENTS WITH SOURCE

Unless the audit is intended to be "unannounced," the following arrangements should be made with the source:

1. Audit Date
   Check with the plant environmental coordinator to ensure that the target audit date does not conflict with the plant's projected operating schedule. Avoid scheduling audits during times when source maintenance outages are planned. A source need not be operating for its CEMS to be audited, but technicians are generally in short supply during outages, and major CEMS maintenance is often scheduled to coincide with the unit outage. Point in-situ CEMS's employ temperature compensation circuitry which is normally optimized for the generally encountered range of effluent temperatures. Stack temperatures during an outage are far outside these ranges.

2. Audit Logistics
   Determine the location of and access to important CEMS components, whether gas cylinders can be conveniently transported to the sampling location, and if necessary, the length of audit gas transport line needed to carry the audit gases to the sampling location.

3. Availability of a CEMS Technician

A CEMS technician should be available to assist with the audit. He will assist with:

- Determining data acquisition system (DAS) capabilities and limitations;
- Locating key CEMS components (sample points, analyzer enclosures, DAS displays);
- Identification of CEMS operating cycles;
- Physical contact with the CEMS hardware, such as connection of the audit gas system; and
- Data retrieval at the completion of the audit.

Unannounced audits should not be attempted until the auditor and source personnel are familiar with the necessary audit activities.

2.5 LEGAL AUTHORITY AND LIABILITY

Before going to the site, list the legal authority under which the audit will be conducted and summarize the relevant regulations or permit conditions.

To minimize any liability for damage to the equipment, the auditor should not have any physical contact with the CEMS hardware. Connecting the audit gas system, or other physical contact with the installed equipment, should be done by the CEMS Technician. As a general rule, the auditor should not adjust the installed equipment or direct the CEMS Technician to make any adjustments or changes. The purpose of the audit is to define the condition of the CEMS at a specific time. Changes which may result from the audit are the responsibility of the source owner.

3. GENERAL PRINCIPLES OF AUDIT GAS INJECTION

To evaluate the entire sampling system, audit gas needs to be injected as close to the sampling nozzle as possible. Injection procedures depend on the type of CEMS (i.e., extractive or in-situ). The agency field inspector should review the gas injection system with the source technician for the CEMS being evaluated.

3.1 AUDIT GAS INJECTION FOR AN EXTRACTIVE CEMS

Extractive sampling systems may be configured in a variety of ways. Regardless of the configuration, it is important that the sample stream pressure and flow rate to the analyzers are the same during audit gas analysis as during normal effluent sampling. This is accomplished by supplying an excess of audit gas to the probe at atmospheric pressure while the CEMS operates in its normal sampling mode; the CEMS withdraws audit gas at its normal sample flow rate while excess audit gas is vented to the atmosphere.

Two general audit techniques are described in Subsections 3.1.1 and 3.1.2. Subsection 3.1.1 is intended for those CEMS's which automatically vent excess calibration gas through the probe into the stack. Subsection 3.1.2 covers those CEMS's which require an external atmospheric vent to ensure that that audit gas is supplied at atmospheric pressure.

The audit gas manifold shown in Figures 1 through 4 is optional. An audit gas manifold is recommended, especially when several audit gases are required.

Most extractive systems incorporate a spare sample line, a calibration gas transport line, or both in the sample line bundle between the probe valve box and the analyzer enclosure. For convenience, one of these lines may be used to transport audit gases from the analyzer location to the probe location. If the calibration gas transport line is used for this purpose, it should be disconnected from the calibration valves at the analyzer location so the CEMS does not have to be in the calibration mode for the audit gases to flow to the probe location.

3.1.1 Probe Vent Audit Technique

This technique is applicable to extractive sampling systems which vent excess calibration gas through the probe to the stack. Examples are systems which introduce calibration gas into a Tee or a filter chamber at the probe exit (Figure 1) and in-stack dilution probe systems (Figure 2). These figures

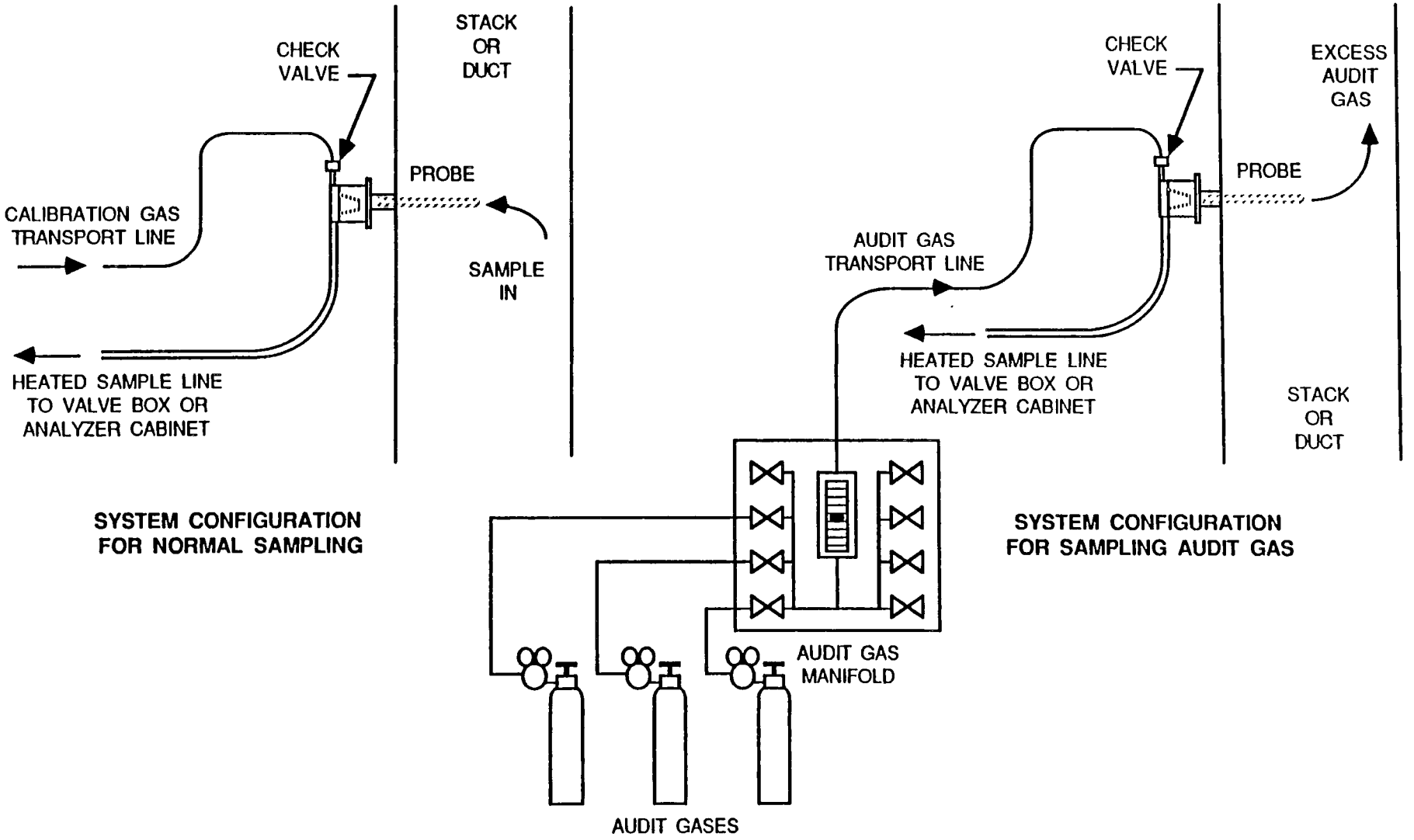

Figure 1. Extractive probe with calibration gas line into filter chamber on probe outlet.

3780 5/89

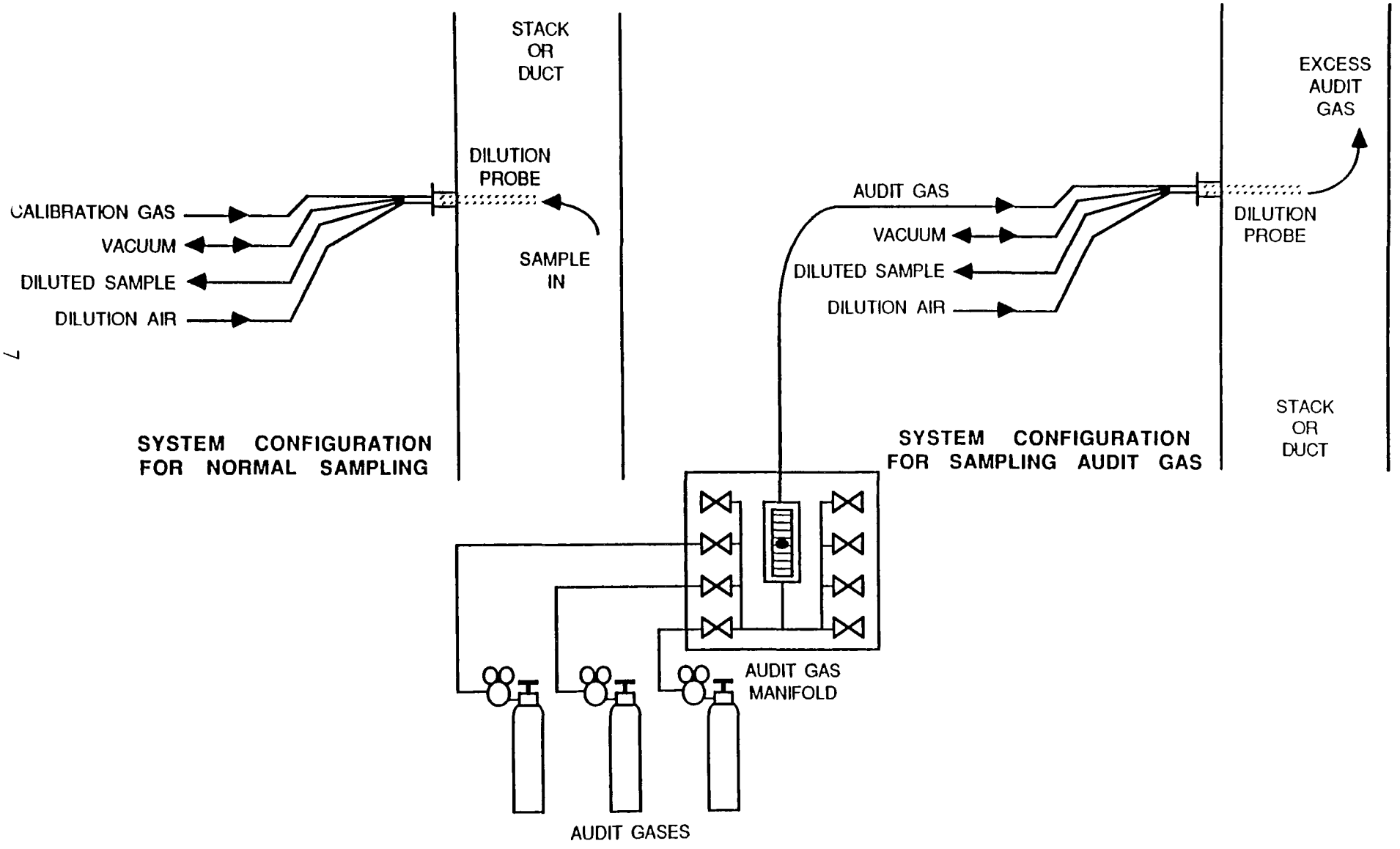

Figure 2. In-stack dilution probe type extractive system.

illustrate the normal sampling configuration and the audit gas injection setup for these systems.

The audit gas flow rate must be higher than the CEMS sample stream flow rate to prevent dilution of the audit gas. The CEMS technician should use the following procedure to establish the correct flow rate.

1. Connect the audit gas system to the CEMS injection port as shown in Figure 1 or 2.

2. Inject a zero gas. Slowly increase the regulator delivery pressure until the flow meter indicates the rate recommended by the CEMS vendor. (In the absence of vendor information, 1 lpm is generally acceptable for in-stack dilution probe systems; for other extractive systems, choose a flow rate (1-2 lpm higher than the indicated total sample stream flow rate.) Allow sufficient time for the analyzer(s) to achieve a stable response. Record the stabilized response(s).

3. Decrease the gas injection rate by 0.5 lpm. Allow the analyzer responses to stabilize and record the responses. If the responses at both flow rates are the same, use the manufacturer's recommended flow rate; proceed to Step 6.

4. If the monitor's zero response is greater at the lower flow rate, increase the flow rate in 0.5 lpm increments until the zero response remains unchanged with further flow rate increases. This indicates that the flow rate is high enough to prevent dilution of the audit gas with effluent.

5. Inject all audit gases at a rate of 1 lpm higher than the minimum flow rate determined in Step 4 to prevent audit gas dilution.

6. Record the gas flow rate used and the time allotted for injection of each gas.

After completion of the audit, be sure the CEMS is returned to its original configuration and that all fittings are properly tightened to prevent ambient air from entering the sampling system during normal operation.

3.1.2 External Atmospheric Vent Audit Technique

This technique is applicable to extractive sampling systems which have no provisions for venting excess calibration gas. Two such systems are shown in Figures 3 and 4. These figures also illustrate the external atmospheric vent audit gas setup. The rotameter can be monitored visually to verify excess flow. Note that in the absence of excess flow, ambient air will enter the sampling system through the flow meter and will dilute the gas.

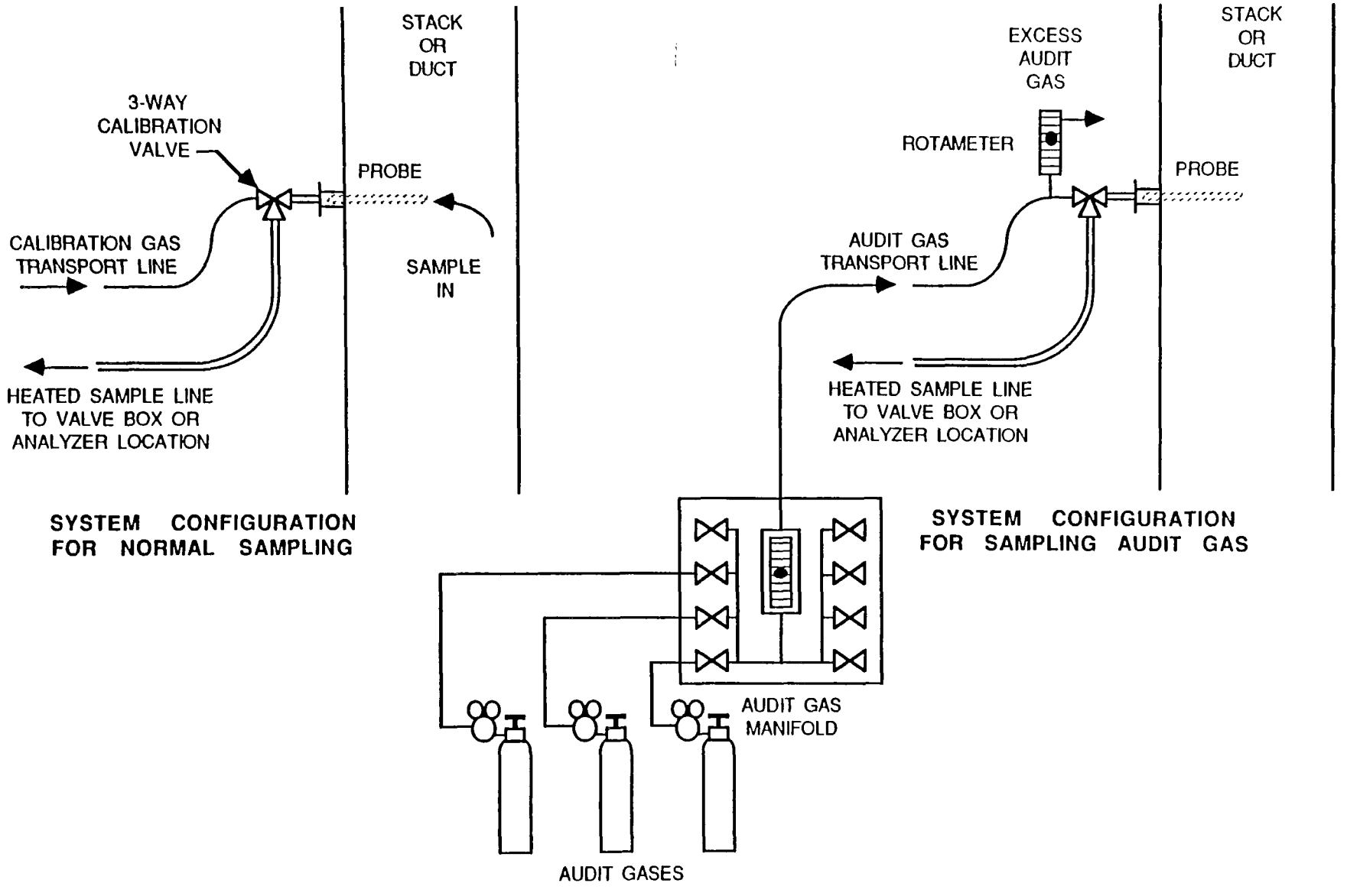

Figure 3. Extractive probe with 3-way calibration valve on outlet.

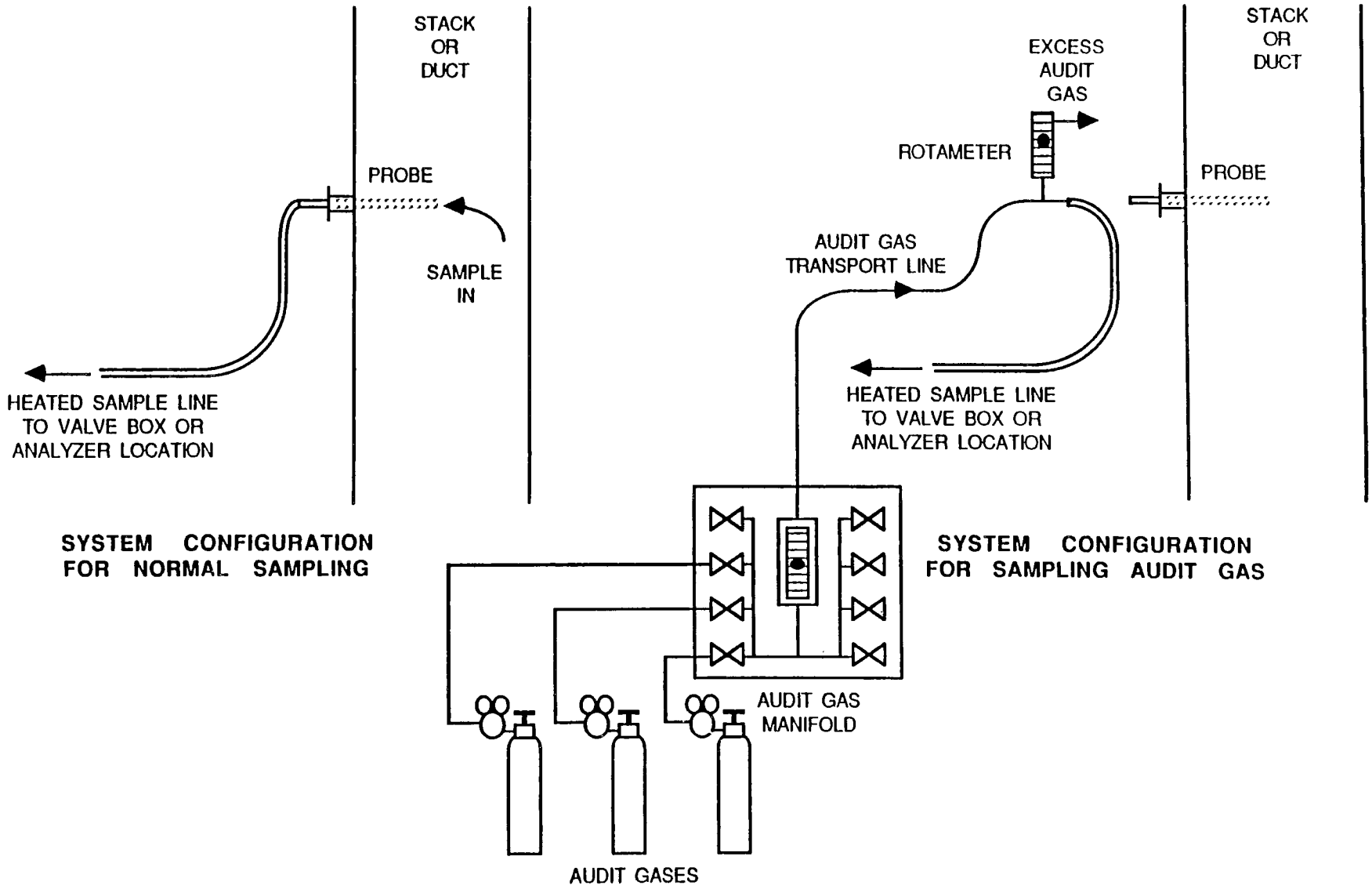

Figure 4. Extractive probe without 3-way calibration valve.

The CEMS technician should use the following procedures to inject the audit gases.

1. Connect the audit gas system to the CEMS sampling system as shown in Figure 3 or 4.

2. Select each gas in turn and adjust the regulator delivery pressure to provide an excess flow of 1 to 1.5 lpm. Allow each analyzer to stabilize before recording its response to an audit gas. Record the gas injection rate used and time allotted for each gas.

After completion of the audit, be sure the CEMS is returned to its original configuration and that all fittings are properly tightened to prevent ambient air from entering the system during normal operation.

3.2 AUDIT GAS INJECTION FOR A POINT IN-SITU CEMS

Figure 5 shows an audit gas injection set-up for a point in-situ CEMS. The audit gas manifold is optional. The audit gas flows through the calibration gas injection port, through a stainless steel tube within the probe, and into the measurement cavity within the in-stack ceramic filter on the end of the probe. The audit gas flow rate must be adjusted so that there is sufficient flow to force effluent from the ceramic filter (see Figure 6).

Excessive flow can cause errors due to (1) compression of the audit gas within the ceramic filter, or (2) inadequate time for audit gas to warm to stack temperature while traversing the length of the probe. The proper gas injection rate will depend on the condition of the in-stack filter. Since the condition of the filter will vary with time, the proper flow rate must be verified each time a system is audited. The CEMS technician should use the following procedure to establish the correct flow rate:

1. Connect the audit gas system to the CEMS injection port as shown in Figure 5 and adjust the regulator delivery pressure to about 10 psig for each of the calibration gases.

2. Inject a high range audit gas (use SO_2 for SO_2/NO and SO_2 monitors; use NO_x only for NO_x monitors). Slowly open the flow control valve until the flow meter indicates the rate recommended by the manufacturer. (For LSI SM810 analyzers, the recommended rate is 2 lpm.) Allow sufficient time for the analyzer to achieve a stable response. Record the stabilized response.

3. Increase the gas injection rate by 0.5 lpm. Allow the monitor response to stabilize and record the concentration value indicated by the monitor. If the monitor response at both flow rates is the same, use the manufacturer's recommended flow rate; proceed to Step 6.

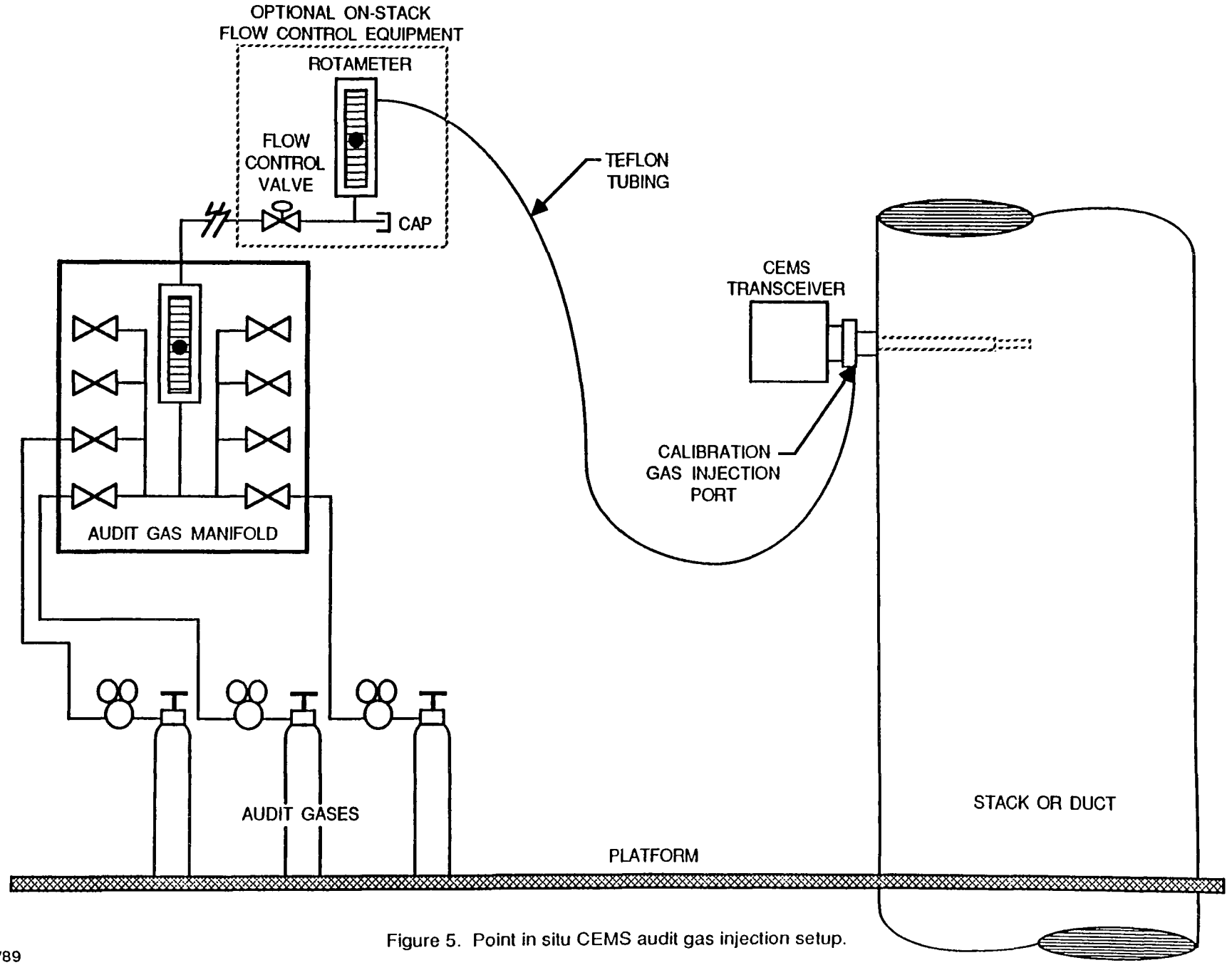

Figure 5. Point in situ CEMS audit gas injection setup.

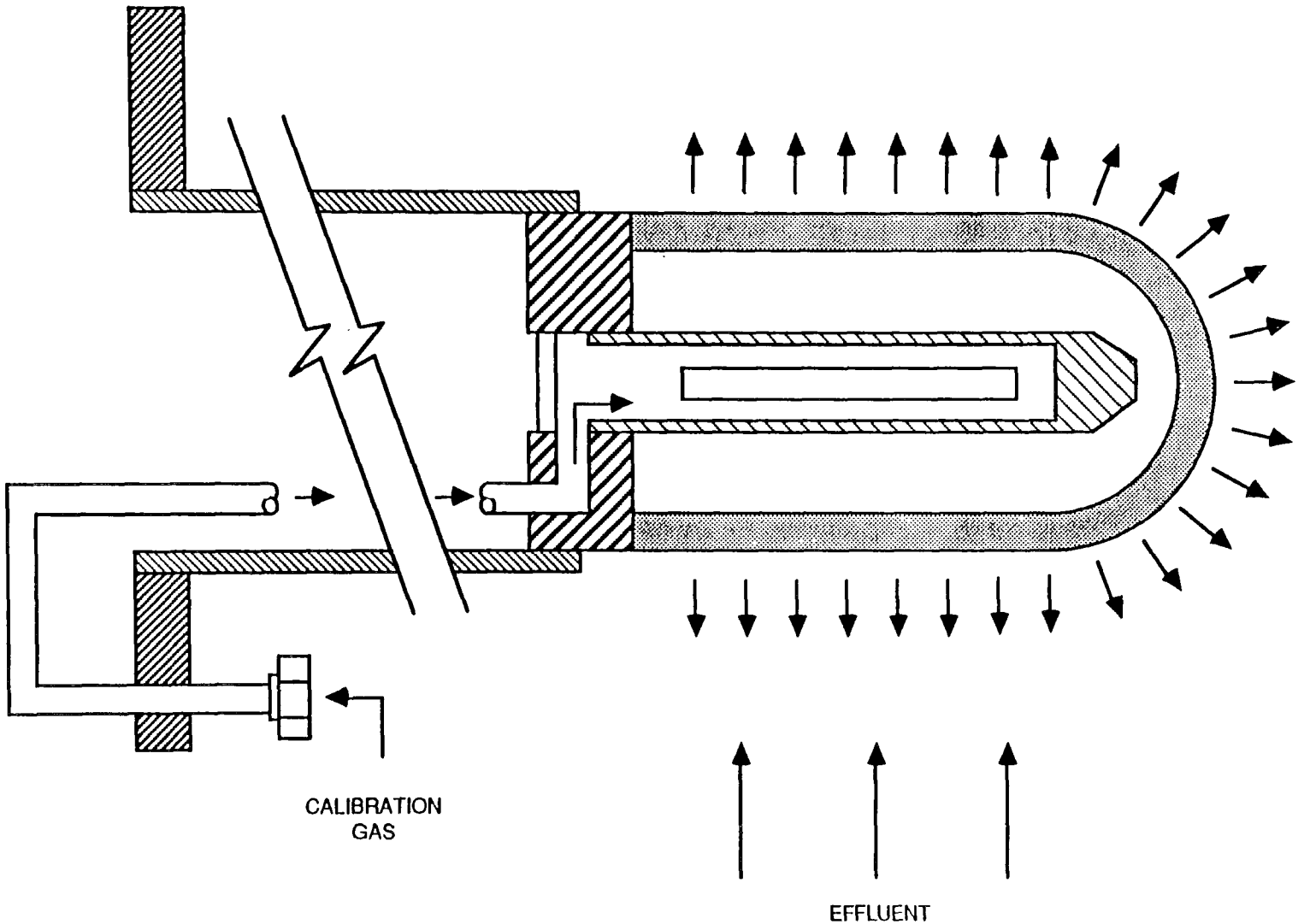

Figure 6. Point in situ calibration gas injection.

4. If the monitor response is greater at the higher flow rate, inject the same gas at 0.5 lpm below the recommended flow rate, allow the response to stabilize, and record the results. If the response at this flow rate is the same as at the recommended flow rate, inject the audit gases at a rate of 0.25 lpm lower than the recommended flow rate; proceed to Step 6.

5. If the monitor response at the lower flow rate is lower than at the recommended flow rate, inject a zero level gas at the recommended flow rate and note the stabilized zero level response. (A small positive offset may be observed; some monitors amplify positive noise and ignore negative noise.) Decrease the gas injection rate in increments of 0.25 lpm until the stabilized zero response begins to rise. This indicates that the gas injection rate is too low to prevent the diffusion of stack gases into the measurement cavity. Inject all audit gases at a rate of 0.25 lpm greater than the flow rate which exhibits the increased zero response.

6. Record the flow rate used and the time allowed for injection of each gas.

After completion of the audit, be certain the gas injection port is sealed tightly to prevent ambient air from entering the system during normal sampling.

4. CONDUCTING THE FIELD AUDIT

A "General Audit Information" data form is provided in Section 6. On this form record general audit information regarding plant contacts, audit participants (agency and source), how data are collected, factors which may affect data manipulation or audit results, problems noted, etc. Additional notes and comments should be attached to this sheet if necessary.

The actual field audit is conducted by injecting each audit gas into the CEMS a minimum of two times. The CEMS should be set-up to exclude audit data from the emissions averages. If this cannot be done, alternative procedures will be needed to isolate and record analyzer responses to the audit gases. Except for the exclusion of audit gas response data from calculated emission averages, the CEMS should be operating in its normal mode.

4.1 AUDIT GAS INJECTION

1. Instruct the CEMS technician to connect the audit gases, as outlined in Section 3. On the Audit Gas Injection Record (provided in Section 6) record the time when effluent sampling is interrupted (e.g., when the sample line is removed from the probe).

2. Adjust the audit gas delivery rate according to the procedures in Section 3.

3. Inject each gas until a stable response is obtained. If the CEMS operates with a periodic sampling and analysis cycle, inject each gas for a minimum of one complete cycle. Record the beginning time for each gas injection on the Audit Gas Injection Record.

4.2 NUMBER OF GAS INJECTIONS

1. Each audit gas should be analyzed twice. These analyses should be separated by the analysis of a different audit gas or a zero gas.

2. If the system responses for the two analyses of the same gas vary from each other by more than 10% of the gas value, a problem with one of the injections should be suspected. In this case, a third analysis should be run. The third analysis should be separated by the analysis of a different audit gas or a zero gas.

3. If three gas injections are done, calculate a mean response from the two results which are closest to each other.

4.3 DATA RECORDKEEPING

1. The results of each gas analysis should be recorded on the Audit Results form. Acceptable accuracy levels for each audit gas are available from the Inspector's Quick Check Audit Gas Data Sheet. Example forms are shown in Section 6.

2. Often, a zero level response will be available for each monitoring channel. For instance, an O_2 audit gas for an extractive CEMS will also be a zero level audit gas for the SO_2 channel. Recording these zero responses is optional, but is encouraged because they provide additional CEMS performance data with no additional resource expenditure.

3. A copy of the completed Audit Results Form may be left with the source. Since the Inspector's Quick Check Audit Gas Data Sheet reveals the concentrations of the blind audit gases, it should be treated as confidential. It will not be shown to or left with source personnel.

5. POST-AUDIT ACTIVITIES

Post-audit activities will vary from agency to agency. This section includes a brief description of several activities that should be done and one data manipulation activity that should not be done.

5.1 PLOT CEMS RESPONSE AS FUNCTION OF AUDIT GAS CONCENTRATION

A Graphic Presentation of CEMS Response form is provided in Section 6. Use of this optional presentation of audit data is encouraged. Plot the actual audit gas concentration along the horizontal axis and the CEMS responses along the vertical axis. If zero level response data are available, include them on the plot. By connecting the plotted points, a good estimation for the CEMS performance over a wide range of concentrations is obtained.

5.2 FILE DATA

Copies of the completed AUDIT DATA FORM should be filed at the agency according to the agency's filing procedures.

5.3 FOLLOW-UP ACTIVITIES

When the audit reveals unacceptable CEMS accuracy, follow-up activities should include encouraging the source to remedy the problem and scheduling a follow-up audit. When the audit reveals acceptable accuracy, the source should be notified, along with a few words of thanks and appreciation for its cooperation.

5.4 NO CORRECTIONS OF REPORTED EMISSIONS DATA

Do not "correct" reported emissions data based on the audit results. The audit results demonstrate the performance of the CEMS at one point in time. The audit is intended to determine the acceptability of emissions data, and does not provide a basis for adjustment of the data.

6.0 DATA FORMS

Facsimilies of data forms designed to facilitate gas CEMS audits are provided in this section. Example forms are also provided showing data obtained from a hypothetical audit.

PRE-AUDIT DATA FORM

Plant Name _____

Company Name _____

Plant Contact _____

Phone Number _____

Address _____

Company Contact _____

Phone Number _____

Address _____

CEMS Type (extractive, point in situ, etc.) _____

Manufacturer (KVB, LSI, etc.) _____

EMISSIONS:	SO_2		NO_x		Other		Diluent
	(lb/mmBtu)	(PPM)	(lb/mmBtu)	(PPM)	(lb/mmBtu)	(PPM)	(%)
Typical							
Standard		*		*		*	

* Concentration at level of the standard and typical diluent concentration

Analyzer	Maker	Model	Full Scale Value	S/N
SO_2				
NO_x				
Diluent				
Other				
Other				

Gases Needed	Low Level	High Level
SO_2		
NO_x		
O_2		
CO_2		
Other		

Probe Location(s) _____

Access to Probe Location _____

Need Gas Transport Line (Y / N) _____ Length of Transport Line Needed _____ ft.

GENERAL AUDIT INFORMATION

AUDIT DATE: _____

PLANT CONTACT:

Name _____

Phone _____

Address _____

AUDIT PARTICIPANTS:

Name	Affiliation	Phone Number

How is CEMS audit data collected? (Computer screen, printout, stripchart)

_____

Correction applied to emissions data? _____

Correction applied to audit data? _____

NOTES: _____

_____

_____

_____

_____

_____

3736 8/88

AUDIT GAS INJECTION RECORD

Plant _____ Unit No. _____

Date _____

Time when effluent sampling is interrupted: _____

Injection No.	Gas Name	Time Injection Begins	CEMS Responses				
			SO_2	NO_x	Diluent	Other	Other
			ppm	ppm			
1							
2							
3							
4							
5							
6							
7							
8							
9							
10							
11							
12							
13							
14							
15							

Time effluent sampling resumes: _____

3736 8/88

AUDIT RESULTS FORM

Plant Name _____ Auditor _____

Company _____ Date _____

Unit No. _____ CEMS Sample Location _____

Measurement Range	Gas Name	Gas[1] Conc.	Analysis #1	Analysis #2	Analysis[2] #3	Mean Response	Accuracy Level
Example	SO_2 #EX	Blind	154	160		157	A
Low SO_2							
High SO_2							
Zero (optional)							
Low NO_x							
High NO_x							
Zero (optional)							
Low Diluent							
High Diluent							
Zero (optional)							
Other: Low							
High							
Zero							
Other: Low							
High							
Zero							

1 Write "blind" if gas concentration is to remain unknown to the source.

2 Analysis #3 should be performed only if the difference between analyses #1 and #2 exceeds 10% of the gas value. If Analysis #3 is performed, use the two analyses with the least difference to calculate the mean response.

3780 6/89

GRAPHIC PRESENTATION OF CEMS RESPONSE

Plant Name _____ Auditor _____

Company _____ Date _____

Unit No. _____ Measurement Channel _____

CEMS Location _____ Instrument Span _____

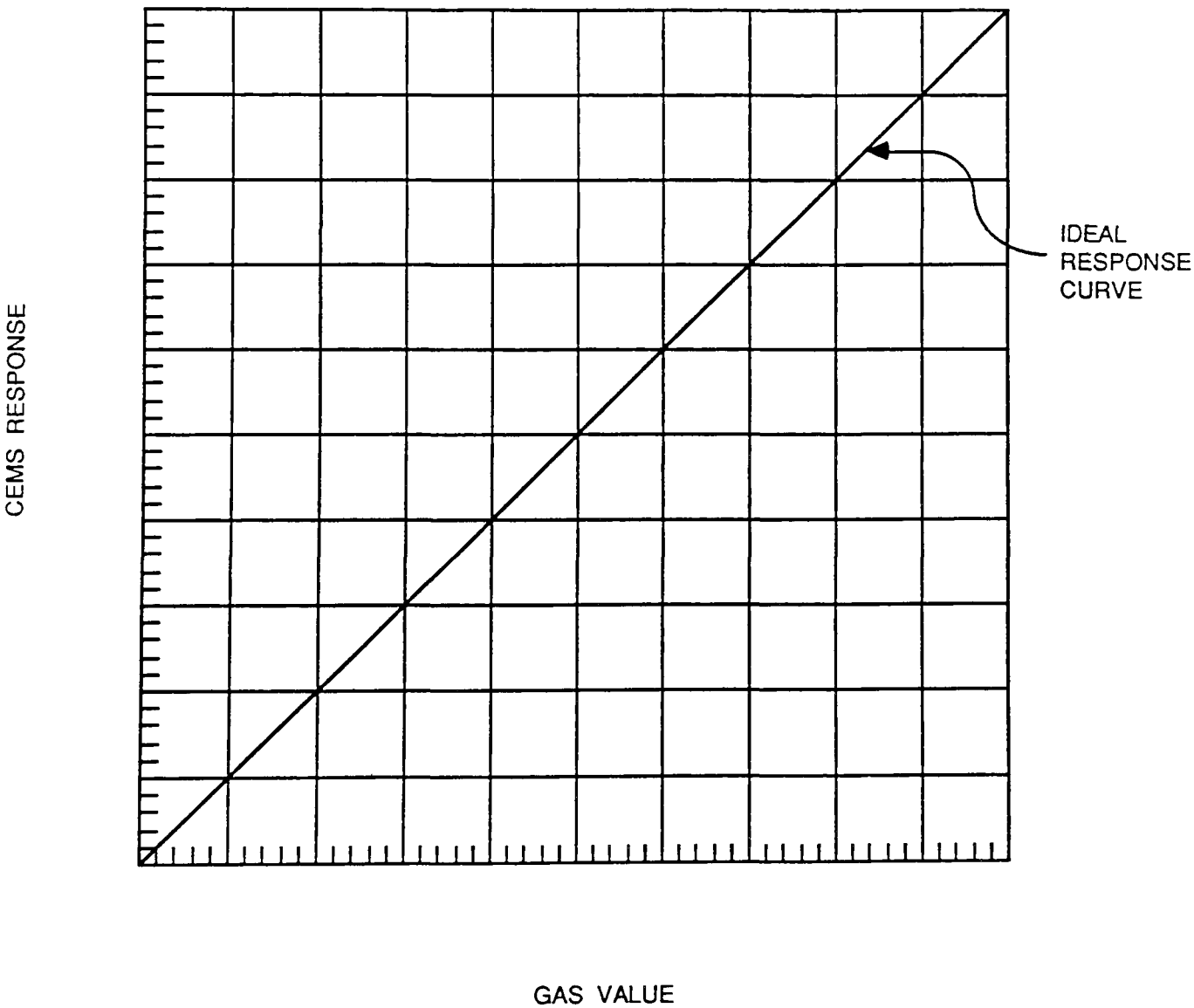

3780 5/89

CONFIDENTIAL

INSPECTOR'S QUICK CHECK AUDIT GAS DATA SHEET

			Accuracy Levels			
			Acceptable			Unacceptable
Status	Gas	Conc.	A ≤ 5%	B ≤ 10%	C ≤ 15%	D > 15%
	Examples: SO_2 EX #1	150 ppm	142 - 158	135 - 165	127 - 173	≤ 126 ≥ 174
Blind	O_2 EX #2	12.4 %	11.8 - 13.0	11.2 - 13.6	10.5 - 14.3	≤ 10.4 ≥ 14.4
			-	-	-	≤ ≥
				-	-	≤ ≥
						≤ ≥
			-	-	-	≤ ≥
			-	-	-	≤ ≥
			-	-	-	≤ ≥
			-	-	-	≤ ≥
			-	-	-	≤ ≥
			-	-		≤ ≥
			-			≤ ≥
			-	-	-	≤ ≥
			-	-	-	≤ ≥

1. Each audit gas in the possession of the agency should be included on this sheet.

2. Write "Blind" in the status column beside those gases whose concentrations will remain unknown to source personnel. It is recommended that a portion (or all) of the agency's audit gases be designated as blind.

3. Column "Conc.": Write certified value of audit gas in this column to the nearest ppm or 0.1%, as appropriate.

4. Column A: Lower Limit = (Certified Conc.) x (0.95) [round down]
   Upper Limit = (Certified Conc.) x (1.05) [round up]

   Column B: Limits = (Certified Conc) x (0.9) and (1.1) [round as above]

   Column C: Limits = (Certified Conc) x (0.85) and (1.15) [round as above]

   Column D: Outside Level "C" limits, to the nearest ppm or tenth of percent.

3736 8/8

PRE-AUDIT DATA FORM

Plant Name: EXAMPLE GENERATING STATION

Company Name: EXAMPLE INC

Plant Contact: Jim Goodday

Phone Number: (xxx) - 111 - 2222

Address: Albuquerque N.M.

Company Contact: Ron Pearce

Phone Number: (xxx) - 333 - 4444

Address: Albuquerque N.M.

CEMS Type (extractive, point in situ, etc.): Extractive

Manufacturer (KVB, LSI, etc.): KVB

EMISSIONS:	SO_2 (lb/mmBtu)	SO_2 (PPM)	NO_x (lb/mmBtu)	NO_x (PPM)	Other (lb/mmBtu)	Other (PPM)	Diluent (%) O_2
Typical	0.80	348	0.53	321	—		6.1
Standard	1.20	522 *	0.70	424 *	—	*	

* Concentration at level of the standard and typical diluent concentration

Analyzer	Maker	Model	Full Scale Value	S/N
SO_2	Rosemount	400	1500 ppm	--
NO_x	TECO	10AR	1000 ppm	—
Diluent	Thermox	WDG-III	25 %	—
Other				
Other				

Gases Needed	Low Level	High Level
SO_2	300 - 450 ppm	750 - 900 ppm
NO_x	200 - 300 ppm	500 - 600 ppm
O_2	4 - 6 %	8 - 12 %
CO_2		
Other		

Probe Location(s): Stack

Access to Probe Location: Elevator. Plenty of room for gas cylinders

Need Gas Transport Line (Y / N): No Length of Transport Line Needed: ____ ft.

GENERAL AUDIT INFORMATION

AUDIT DATE: June 10 88

PLANT CONTACT:

Name Jim Goodday

Phone (505) - 111 - 2222

Address Albuquerque N.M.

AUDIT PARTICIPANTS:

Name	Affiliation	Phone Number
Jim Goodday	Examp. Gen. Sta.	above
Ron Pearce	Examp. Inc	505 - 37-4444
[illegible]	Examp Gen. Sta	[illegible]
P. J. Martinez	State of New Mexico	[illegible]
Anton Wayne	EPA Reg. VI	505 - 37-8888

How is CEMS audit data collected? (Computer screen, printout, stripchart)

1-min averages, from computer printout

Correction applied to emissions data? Yes, based on daily zero + span checks

Correction applied to audit data? Yes, correction applied by computer

NOTES: DATA CORRECTION APPLIED BY COMPUTER:

Corrected Output = (Ratio)(Raw Analyzer Input) + Diff

Ratio = Span Gas Value / (Analyzer Response to Span Gas - Zero Reading)

Diff = 0 - (Zero Reading)(Ratio)

3736 8/88

AUDIT GAS INJECTION RECORD

Plant: Example Generating Station Unit No.: 1

Date: Jan 4 1988

Time when effluent sampling is interrupted: 13:30

Injection No.	Gas Name	Time Injection Begins	CEMS Responses				
			SO_2 ppm	NO_x ppm	Diluent	Other	Other
1	O_2 =1	13:48	11	1	4.73		
2	NO_x 3	13:54	11	531.3	0.21		
3	SO_2 4	14:04	810.3	-1	0.15		
4	O_2 2	14:12	13	-1	10.32		
5	SO_2 2	14:19	314.2	-1	0.18		
6	NO_x 2	14:26	13	270.3	0.15		
7	SO_2 2	14:33	325.8	-1	0.16		
8	NO_x 3	14:40	15	531.2	0.6		
9	SO_2 4	14:47	822.7	-1	0.17		
10	O_2 1	15:54	17	-1	4.69		
~~11~~	Purge	15:01-05	—	—	—		
11 ~~12~~	O_2 2	15:06	19	-1	10.37		
12 ~~13~~	NO_x 2	15:13	21	270.9	0.17		
14							
15							

Time effluent sampling resumes: 15:26

3736 8/88

AUDIT RESULTS FORM

Plant Name: Example Gen. Sta. Auditor: Martinez / Wayne

Company: Example Inc. Date: June 4, 1988

Unit No.: 1 CEMS Sample Location: Unit 1 Stack

Measurement Range	Gas Name	Gas[1] Conc.	Analysis #1	Analysis #2	Analysis[2] #3	Mean Response	Accuracy Level
Example	SO_2 #EX	Blind	154	160		157	A
Low SO_2	SO_2 2	301	314	326		320	B
High SO_2	SO_2 4	Blind	810	823		817	A
Zero (optional)	NOx O_2	0	11 11 13 13	15 11 19 21		15	—
Low NO_x	NOx 2	Blind	270	271		271	A
High NO_x	NOx 3	550	531	531		531	A
Zero (optional)	SO_2, O_2	0	-1 -1 -1 -1	-1 -1 -1 -1		-1	—
Low Diluent	O_2 1	Blind	4.7	4.7		4.7	A
High Diluent	O_2 2	Blind	10.3	10.4		10.4	A
Zero (optional)	NH_3, SO_2	0	0.21 0.15 0.18 0.15	0.16 0.16 0.17 0.17		0.2	—
Other: Low							
High							
Zero							
Other: Low							
High							
Zero							

1 Write "blind" if gas concentration is to remain unknown to the source.

2 Analysis #3 should be performed only if the difference between analyses #1 and #2 exceeds 10% of the gas value. If Analysis #3 is performed, use the two analyses with the least difference to calculate the mean response.

3780 6/89

GRAPHIC PRESENTATION OF CEMS RESPONSE

Plant Name	Example Generating Station	Auditor	Workingman / Wayne
Company	Example Inc.	Date	June 4 1988
Unit No.	1	Measurement Channel	SO_2
CEMS Location	Stack	Instrument Span	0-1500 ppm

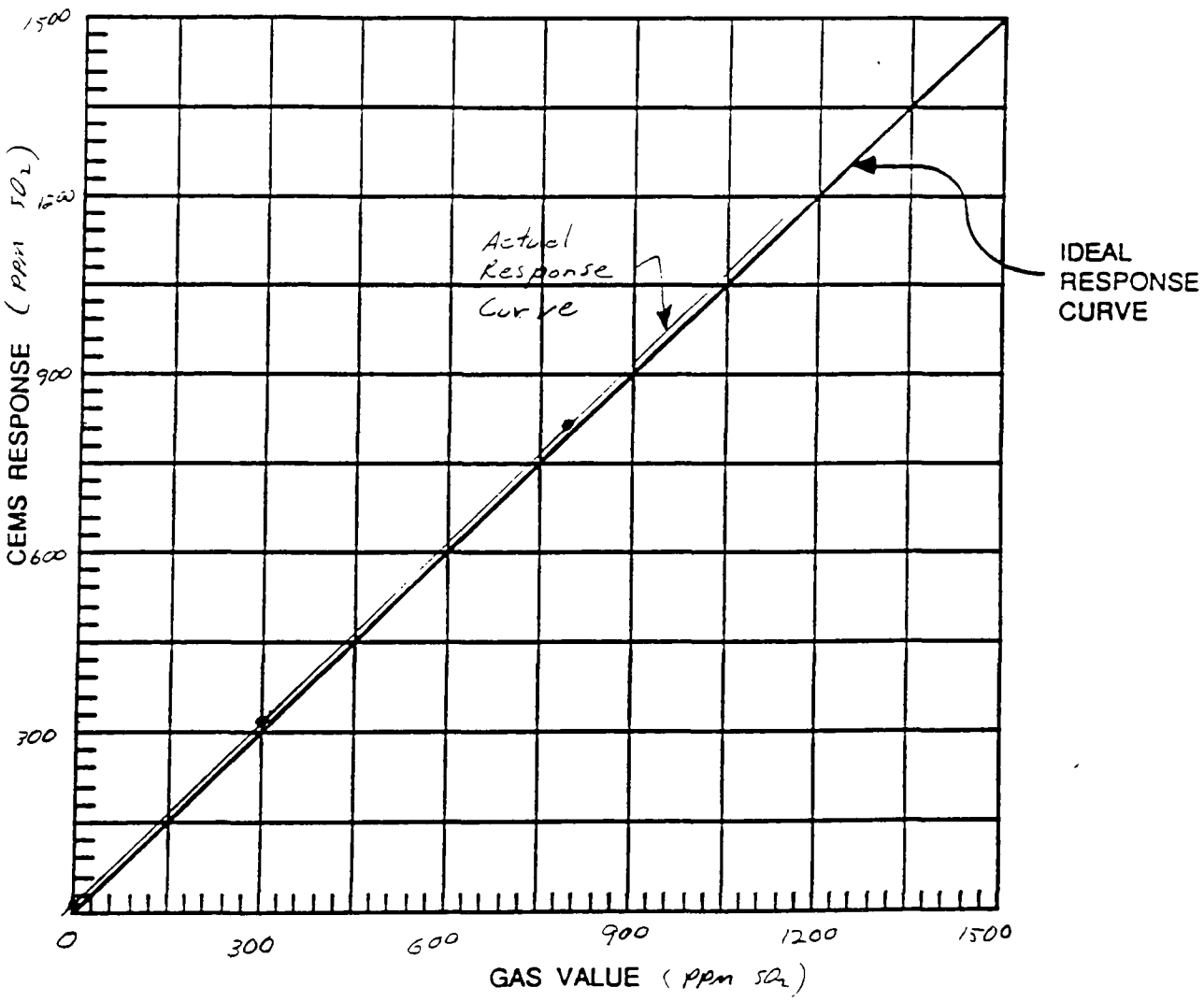

3736 8/88

GRAPHIC PRESENTATION OF CEMS RESPONSE

Plant Name	Example Generating Station	Auditor	Warring / Wayne
Company	Example Inc.	Date	[illegible]
Unit No.	1	Measurement Channel	NO_x
CEMS Location	Stack	Instrument Span	[illegible]

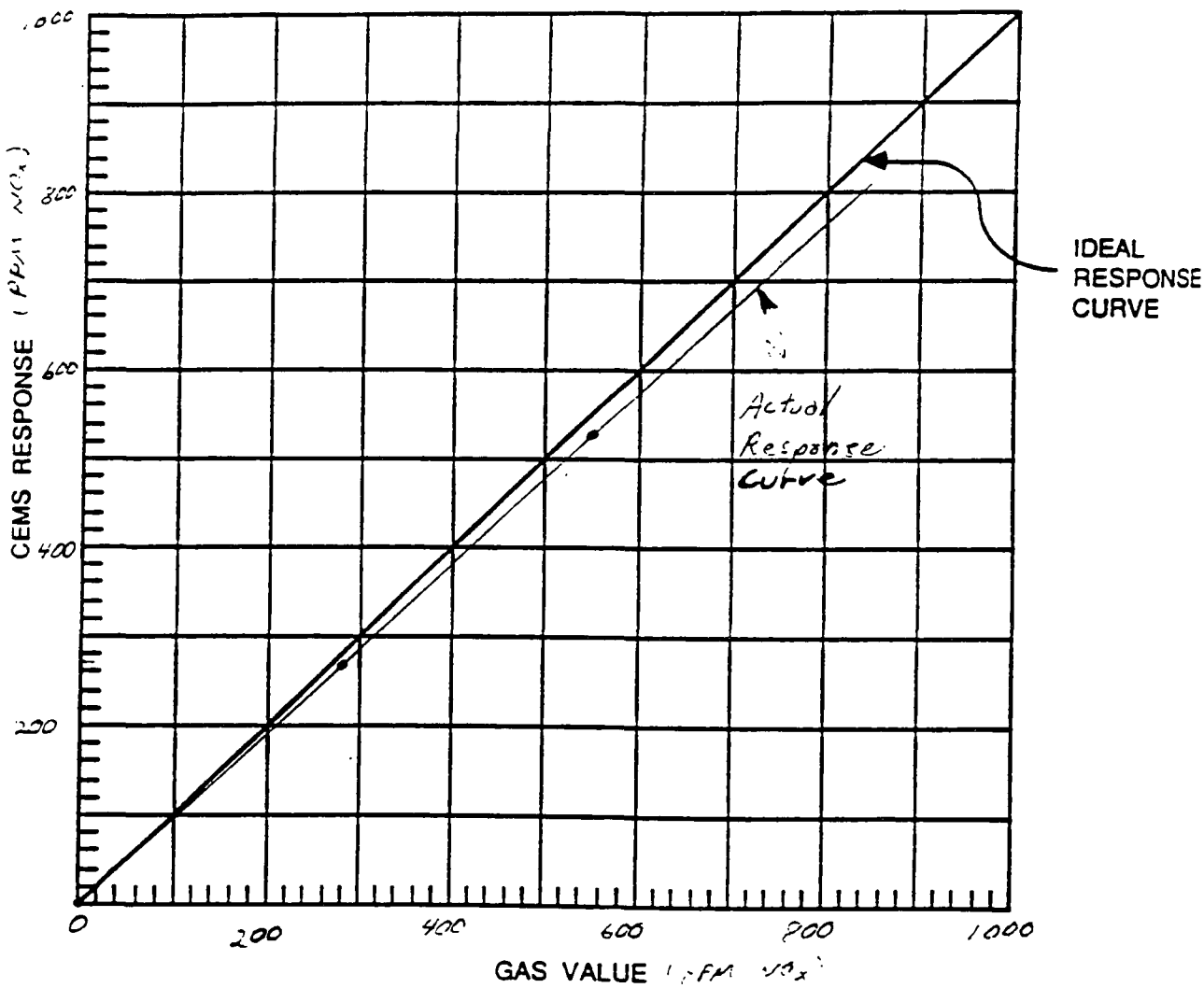

3736

GRAPHIC PRESENTATION OF CEMS RESPONSE

Plant Name	Example Generating Station	Auditor	Martinem / Wayne
Company	Example, Inc.	Date	June 4 1988
Unit No.	1	Measurement Channel	O_2
CEMS Location	Stack	Instrument Span	0-25%

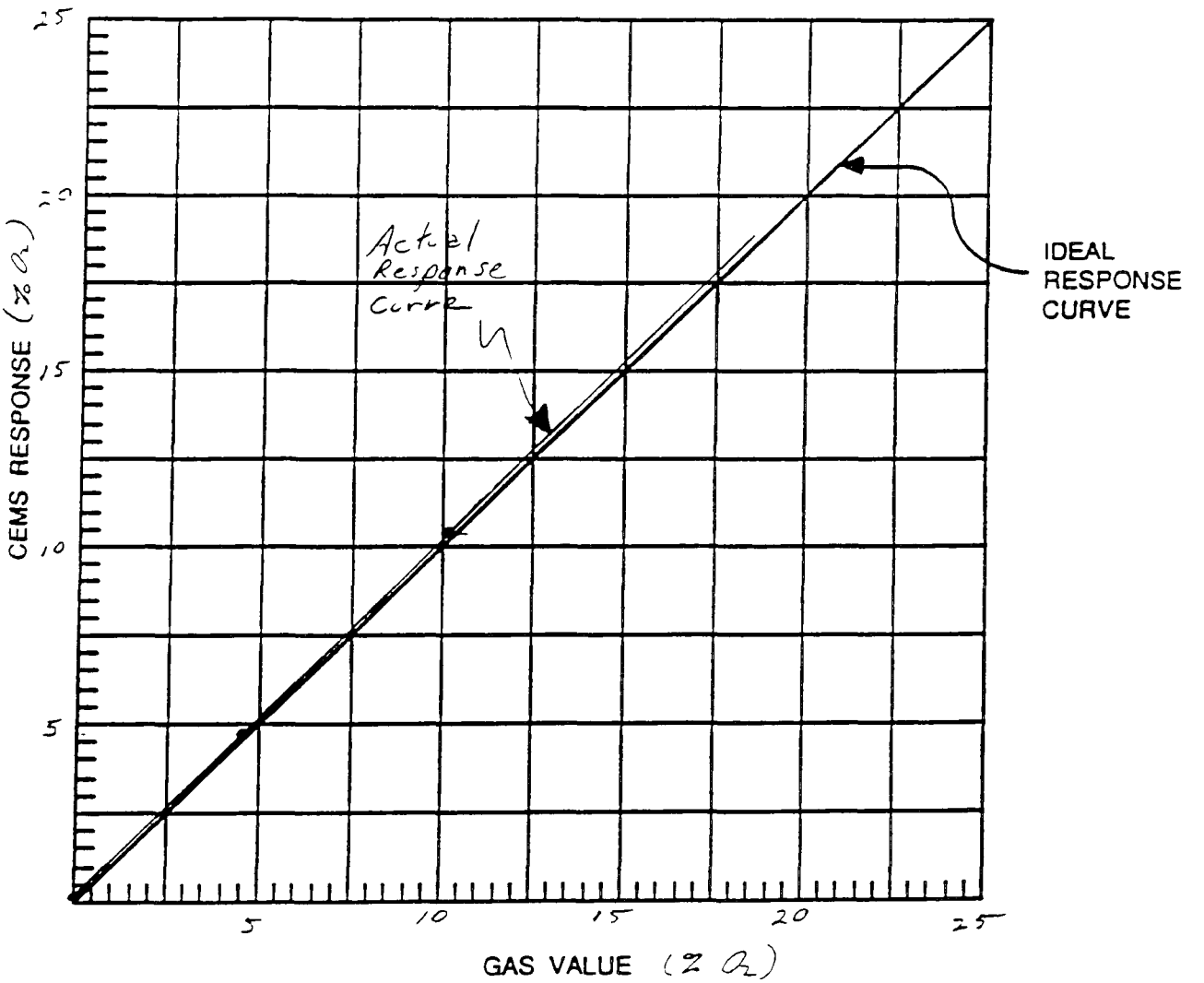

3736 8/88

EXAMPLE

CONFIDENTIAL

INSPECTOR'S QUICK CHECK AUDIT GAS DATA SHEET

			Accuracy Levels			
			Acceptable			Unacceptable
Status	Gas	Conc.	A ≤ 5%	B ≤ 10%	C ≤ 15%	D > 15%
	Examples: SO_2 EX #1	150 ppm	142 - 158	135 - 165	127 - 173	≤ 126 ≥ 174
Blind	O_2 EX #2	12.4 %	11.8 - 13.0	11.2 - 13.6	10.5 - 14.3	≤ 10.4 ≥ 14.4
			-	-	-	≤ ≥
	SO_2 1	128 ppm	122 - 134	115 - 141	109 - 147	≤ 108 ≥ 148
	SO_2 2	301 ppm	286 316	271 - 331	256 - 346	≤ 255 ≥ 347
Blind	SO_2 3	550 ppm	522 578	495 - 605	467 - 633	≤ 466 ≥ 633
Blind	SO_2 4	801 ppm	761 - 841	721 - 881	681 - 921	≤ 680 ≥ 922
	SO_2 5	1244 ppm	1182 - 1306	1120 - 1368	1057 - 1431	≤ 1056 ≥ 1432
			-	-	-	≤ ≥
	NO_x 1	127 ppm	121 - 133	114 - 140	108 - 146	≤ 107 ≥ 147
Blind	NO_x 2	280 ppm	266 - 294	252 - 308	238 - 322	≤ 237 ≥ 323
	NO_x 3	550 ppm	523 - 578	495 - 605	468 - 633	≤ 467 ≥ 634
			-	-	-	≤ ≥
Blind	O_2 1	4.5 %	4.3 - 4.7	4.0 - 5.0	3.8 - 5.2	≤ 3.7 ≥ 5.3
Blind	O_2 2	10.1 %	9.6 - 10.5	9.1 - 11.1	8.6 - 11.6	≤ 8.5 ≥ 11.7

1. Each audit gas in the possession of the agency should be included on this sheet.

2. Write "Blind" in the status column beside those gases whose concentrations will remain unknown to source personnel. It is recommended that a portion (or all) of the agency's audit gases be designated as blind.

3. Column "Conc.": Write certified value of audit gas in this column to the nearest ppm or 0.1%, as appropriate.

4. Column A: Lower Limit = (Certified Conc.) x (0.95) [round down]
   Upper Limit = (Certified Conc.) x (1.05) [round up]

   Column B: Limits = (Certified Conc) x (0.9) and (1.1) [round as above]

   Column C: Limits = (Certified Conc) x (0.85) and (1.15) [round as above]

   Column D: Outside Level "C" limits, to the nearest ppm or tenth of percent.

3736 8/88

TECHNICAL REPORT DATA
(Please read Instructions on the reverse before completing)

1. REPORT NO. 340/1-89-003	2.	3. RECIPIENT'S ACCESSION NO.
4. TITLE AND SUBTITLE Field Inspectors Audit Techniques: Gas CEMS's Which Accept Calibration Gases		5. REPORT DATE June 1989
		6. PERFORMING ORGANIZATION CODE
7. AUTHOR(S) Wayne E. Reynolds		8. PERFORMING ORGANIZATION REPORT NO.
9. PERFORMING ORGANIZATION NAME AND ADDRESS Entropy Environmentalists, Inc. CEM/Engineering Division PO Box 12291 Research Triangle Park, NC 27709		10. PROGRAM ELEMENT NO.
		11. CONTRACT/GRANT NO. 68-02-4462
12. SPONSORING AGENCY NAME AND ADDRESS U. S. EPA, Stationary Source Compliance Division 401 M Street, SW Waterside Mall Washington, DC 20460		13. TYPE OF REPORT AND PERIOD COVERED
		14. SPONSORING AGENCY CODE

15. SUPPLEMENTARY NOTES

Work Assignment Manager: Anthony P. Wayne, U. S. EPA, Region VI

16. ABSTRACT

This document presents guidance for planning and conducting audits of continuous emission monitoring systems (CEMS's) for gaseous pollutants. It provides simple, cost effective audit procedures for control agency field inspectors to verify the accuracy of CEMS data. The audit procedures are based on the use of audit gases and are applicable only to gas CEMS's configured to accept calibration gases. The document includes an outline of planning activities, principles of audit gas injections, procedures for conducting a field audit, a discussion of post-audit activities, and example data forms.

17. KEY WORDS AND DOCUMENT ANALYSIS

a. DESCRIPTORS	b. IDENTIFIERS/OPEN ENDED TERMS	c. COSATI Field/Group
Air Pollution Monitoring	Continuous Emission Monitoring Gas Audits Audit Procedures	

18. DISTRIBUTION STATEMENT Release to Public	19. SECURITY CLASS *(This Report)* Unclassified	21. NO. OF PAGES 36
	20. SECURITY CLASS *(This page)* Unclassified	22. PRICE

EPA Form 2220-1 (Rev. 4-77) PREVIOUS EDITION IS OBSOLETE