STUDY OF RUM DISTILLERY WASTE TREATMENT AND BY-PRODUCT RECOVERY TECHNOLOGIES

by

SCS Engineers
Long Beach, California 90807

Contract Number 68-03-2578

Project Officers

Harry Thron
Kenneth Dostal
Donald Wilson

Industrial Pollution Control Division
Industrial Environmental Research Laboratory
U.S. Environmental Protection Agency

CONTENTS

		Page
Figures		iii
Tables		iv
I.	Conclusions	I-1
II.	Recommendations	II-1
III.	Introduction	III-1
IV.	General Approach	IV-1
V.	Disposal to a Public Owned Treatment Works (POTW)	V-1
VI.	Ocean Disposal	VI-1
VII.	Land Disposal	VII-1
VIII.	Evaporation	VIII-1
IX.	Pollutant Reduction through Process Modifications	IX-1
X.	Aquaculture	X-1
XI.	Biological Treatment Systems	XI-1
XII.	Bibliography	XII-1
Appendices		
A.	Aquaculture Correspondence	A-1
B.	Anamet Plants	B-1

FIGURES

Number		Page
VI- 1	Proposed ocean outfall. San Juan, Puerto Rico (Bacardi)	VI- 8
VI- 2	Proposed outfalls for Puerto Rico Distillers, Arecibo	VI-10
VI- 3	Proposed outfall for VIRIL	VI-12
VII- 1	Artist's conception of land cultivation site	VII-27
VII- 2	Representative site profile	VII-35
VIII- 1	Potassium Salt Recovery from Crude Potash	VIII-32
VIII- 2	Process flow diagram for the production of organic compound fertilizer	
IX- 4	Molasses centrifugation	IX- 1
IX- 2	Yeast recycling by centrifugation of fermenter beer	IX- 2
IX- 3	Removal of fermenter bottoms and yeast	IX- 9
XI- 1	Typical Anamet System	XI-10
XI- 2	Yeast Cultivation in Molasses Distillery Stillage	XI-17

TABLES

Number		Page
VII- 1	Composition of Selected Constituents in Mostos on a Dry-Weight Basis	VII-13
VII- 2	Annual Quantities of Mostos Generated by Bacardi, Puerto Rico Distillers, and VIRIL	VII-14
VII- 3	Estimated Annual Mostos and Irrigation Water Application Rates for Bacardi (Tultitlan, Mexico) and Serralles (Mercedita, Puerto Rico)	VII-16
VII- 4	Estimation of Maximum Allowable Heavy Metals and Sludge Loadings for Agriculture Crops and Mostos Loadings for Land Farming	VII-18
VII- 5	Estimated Site Life Based on Annual Application Rate of 12 ac-in/yr	VII-20
VII- 6	Minimum Estimated Land Requirements for Bacardi, Puerto Rico Distillers and VIRIL as a Function of Application Rates	VII-24
VII- 7	Basis for Conceptual Design	VII-26
VII- 8	Conceptual Design Waste and Site Parameters	VII-34
VII- 9	Conceptual Design Vehicle Requirements for Land Farming Utilizing Tanker Trucks for Mostos Transportation	VII-37
VII-10	Labor Requirements for Land Farming Utilizing Tanker Trucks for Mostos Transportation	VII-37
VII-11	Labor Requirements for Land Farming Utilizing a Pipeline for Mostos Transportation	VII-38
VII-12	Capital Costs for Three Conceptual land Farming Sites Utilizing Tanker Trucks for Mostos Transportation	VII-39

TABLES (continued)

Number		Page
VII-13	Capital Costs for Three Conceptual Land Farming Sites Utilizing a Pipeline for Mostos Transportation	VII-42
VII-14	Annual Operation and Maintenance Costs for Three Land Farming Sites Utilizing Tanker Trucks for Mostos Transportation	VII-44
VII-15	Annual Operation and Maintenance Costs for Three Land Farming Sites Utilizing a Pipeline for Mostos Transportation	VII-45
VII-16	Summary of Annual Capital and Operating Total Costs for Tanker Truck vs. Pipeline Mostos Transportation	VII-46
VII-17	Annual Land Disposal Costs of Mostos as a Function of Rum Production	VII-48
VIII- 1	Mean Chemical Composition of Cane CMS	VIII-18
VIII- 2	Amino Acid Analysis of Cane CMS	VIII-19
VIII- 3	Estimated Maximum Annual Quantities of CMS Which Could be Incorporated into Puerto Rican Mixed Animal Feed	VIII-22
VIII- 4	Estimated Annual Potassium Production as an Incineration By-Product	VIII-34
VIII- 5	Puerto Rican Annual Commercial Consumption of Potash and Potassium Compounds in Direct Application Materials	VIII-35
IX- 1	Cost Estimates for Pollutant Reduction Through Process Modifications, from Puerto Distillers and VIRIL	IX-11
IX- 2	Breakdown of Cost Estimates for Pollutant Reduction Through Process Modifications, from Puerto Rico Distillers and VIRIL	IX-12
XI-12	Recommended Operating Parameters for Anaerobic Digestion in the Anamet System	XI-12

I. CONCLUSIONS

GENERAL

- Initial investigations showed the following four technologies are not applicable for the treatment of mostos:
  - Coagulation and sedimentation
  - Foam separation
  - High gradient magnetic separation
  - Reverse osmosis
- In-depth investigation showed that the following technologies are also not applicable:
  - Discharge of mostos to a POTW (on Puerto Rico and St. Croix)
  - Aquaculture
- Land farming, the Anamet process, evaporation, incineration and organic fertilizer production, appear to be feasible technologies. Their direct application to the treatment of mostos, however, has not been fully demonstrated.
- Agricultural utilization of mostos on sugar cane as currently practiced by Serralles Destileria in Mercedita, Puerto Rico, and Bacardi in Tultitlan, Mexico, appears to be a viable disposal alternative.

- Aerobic biological processes such as activated sludge and trickling filters are not applicable when considered solely by themselves.
- Anaerobic digestion is partially effective in reducing BOD and suspended solids.
- Pilot plant tests of the Anamet and evaporation processes at Puerto Rico Distillers and Bacardi, respectively, had not been finished prior to the completion of this study. Consequently, conclusions could not be developed with respect to their individual performance.
- The economics of mostos treatment and disposal technology are far from being clearly defined. The present practice of discharging untreated mostos into the ocean through short outfall pipes is inexpensive. All other treatment or disposal alternatives investigated are by contrast very costly. For example, estimates for land farming ranged from approximately 8 to 16 cents per proof gallon produced. The cost of treatment and disposal by the evaporation (CMS) production process, the Anamet treatment process, and incineration were not determined. It is hoped that the pilot plant research presently under way will provide accurate cost ranges.

TECHNOLOGY SPECIFIC

- Land Disposal
  - Land reclamation does not appear to be a viable disposal option

- Agricultural utilization appears to be a practical disposal option for Puerto Rico Distillers.
- The combination of potentially available land and dry climate suggests that VIRIL is suitably located to utilize land farming as a disposal option
- Bacardi is less favorably situated and may not be able to locate sufficient land near their Catano facility to make transport of mostos to the disposal site economically feasible.

- Evaporation

A review of available literature indicates that evaporation of mostos to condensed molasses solubles (CMS) is a technologically feasible treatment alternative. The utilization or ultimate disposal of CMS, however, may not be economically practical.

Estimates of local (Puerto Rican) CMS consumption suggest that approximately 18 percent of the total theoretical CMS production could be utilized as an animal feed supplement if incorporated in the feed at the five percent, by weight, level.

- Incineration

The recovery of potassium salts from incinerator ash is estimated to result in an annual supply of 5,550 T of K_2O, which is approximately five times greater than the current (1965-1975) average annual consumption of direct

application materials. The total potassium market is uncertain.

- Organic fertilizer production

  Utilizing CMS as a raw material, an annual estimated 53,500 metric tons of an organic N-P-K fertilizer could be produced by the three distillers. The annual local consumption of this type of fertilizer was not available from the literature reviewed.

- Biological treatment processes

  Available data suggests that, while neither aerobic or anaerobic processes are, in themselves, satisfactory treatment alternatives, the combination of the two present technologically feasible treatment options. One such process known as Anamet, has been successfully utilized on waste streams similar but not identical to mostos. This suggests that other similar combined biological systems, while not specifically investigated during this study, may have applications to the treatment of mostos.

II. RECOMMENDATIONS

- Results of the Anamet and CMS pilot plant tests should be incorporated into any future evaluation of rum wastes.
- A program should be initiated to evaluate the potential for land farming of mostos. Pilot studies should be conducted in Puerto Rico and St. Croix to determine:
  - Degree of mostos pH adjustment required
  - Compatibility of land farming techniques with site specific topographical and hydrological conditions
  - Disposal application rates as a function of climate, methods of application, solids loading, etc...
  - Degree of mostos degradation as a function of time
  - Accumulation of mostos constituents within the soil matrix and the extent of cationic and anionic migration through the soil column
  - Potential aesthetic problems.
- The feasibility of mostos discharge by Puerto Rico Distillers to nearby government-owned sugar cane fields should be investigated.
- The Bacardí Corporation should consider a fusel oil and "heads" recovery program, thus eliminating this component from the mostos stream.

- Recent innovative aerobic biological treatment processes should be investigated for potential use following anaerobic digestion. Included among these are:
  - UNOX, a proprietary pure oxygen activated sludge process developed by Union Carbide
  - Deep Shaft, developed by Eco-Research
  - Carrousel, developed by Envirotech.
- The potential for local (Puerto Rican) and export consumption of CMS should be fullly investigated.
- A study investigating the short and long-term markets for local organic fertilizers consumption should be initiated.
- A study should be initiated to determine the total potassium market for Puerto Rico and St. Croix.

III. INTRODUCTION

On December 6, 1977, the United States House of Representatives presented a mandate to the United States Environmental Protection Agency (EPA) to study the compatibility of pollutants discharged from Puerto Rico and Virgin Islands rum distillers with the marine environment. Specifically, the EPA was to determine:

- The environmental acceptability of rum distillation wastes
- The potential benefits or adverse effects of marine disposal
- The geographical, hydrological, and biological characteristics of the marine receiving waters around Puerto Rico and the Virgin Islands
- Waste processing technologies which facilitate the recovery of nutrients and/or other beneficial materials in the wastes
- Treatment technologies which reduce the discharge of rum distillation waste pollutants.

In 1978, the EPA initiated a study program aimed at fully assessing the options for disposal of rum distillery wastes and associated environmental consequences. The primary objectives of this study are (1) to identify and assess various treatment

technologies and by-product recovery options available to the rum distillers, and (2) to indicate the existence of information voids so that research and development efforts can be directed toward the filling of these gaps.

IV. GENERAL APPROACH

Selection of treatment and by-product technologies for initial investigation was the first project objective. An initial list of treatment and by-product recovery technologies was prepared from a variety of sources, including:

- In-house EPA information on previous and related work
- Interviews with personnel from The Bacardi Corporation, Puerto Rico Distillers, and The Virgin Islands Rum Industries, Limited (VIRIL)
- Intensive literature review of available foreign and United States research projects dealing with the treatment of cane molasses distillation residues and related wastes and processes
- Unpublished and in-press data made available by the rum distillers
- Current university research projects
- Interviews and correspondence with knowledgeable consultants, and industrial equipment manufacturing representatives.

This assemblage of information and data resulted in the following list of potential treatment and by-product recovery technologies for preliminary evaluation.

- Treatment of wastes by a public owned treatment works (POTW)
- Biological treatment processes
  - Aerobic
    - Trickling filter
    - Activated sludge
  - Anaerobic
    - Anaerobic digestion
  - Anaerobic/aerobic systems
    - Cosculleuela
    - Anamet
  - Other
    - Cultivation of fodder yeasts, bacteria, and fungi
- Evaporation
  - Production of condensed molasses solubles (CMS) for animal feed
  - Utilization of CMS as an intermediate product
    - Incineration with conventional ash disposal
    - Incineration with potassium recovery
    - Organic fertilizer production
- Land disposal
  - Agricultural utilization
  - Land reclamation
  - Land farming
- Process modifications
  - Molasses pretreatment

- Removal of fermenter beer
- Recovery of fusel oils and heads
- Removal and recovery of yeast from fermenter beer

- Ocean disposal
- Aquaculture
- Physical/chemical treatment processes
  - Coagulation and sedimentation
  - Foam
  - High gradient magnetic separation
  - Reverse osmosis.

SELECTION PROCESS

While each of the above treatment and by-product recovery technologies may be considered as a potentially viable alternative to the current waste discharge problems of the rum distillers, some of the alternatives have greater application potential than others. Most of the technologies have never been applied to rum wastes, although they have been successfully employed for the treatment of similar high strength fermentation wastes. Furthermore, the time constraints of this investigative effort dictated that the major research efforts be directed toward only those promising technologies. With these factors in mind, the following criteria were adopted to evaluate each alternative:

- Extent and substance of available literature
- Direct application experience of the technology to the treatment of rum distillery wastes

- Direct application experience of the technology to the treatment of similar wastes - (e.g. beet molasses fermentation residuals)
- Performance and operating characteristics of the treatment process on high strength waste streams
- Estimated investment and annual O&M costs
- Energy consumption
- Potential for retrofitting technology to existing plant facilities
- Ultimate disposal of primary and secondary wastes - (e.g. final effluent, sludge, ash).

Other considerations also entered into the evaluation process. For example, the fact that the distillers are located on islands considerably removed from the contiguous states and the limited availability of land and other resources were important factors.

Each technology was qualitatively reviewed in terms of the above criteria and either accepted or rejected for more intensive investigation.

TREATMENT TECHNOLOGIES AND BY-PRODUCT RECOVERY OPTIONS CONSIDERED UNFEASIBLE

The technologies considered unfeasible are:

- Sedimentation and coagulation
- Foam separation
- High gradient magnetic separation
- Reverse osmosis.

In the following section, an explanation is given for the rejection of each of these technologies.

Sedimentation and Coagulation

Sedimentation for treating rum distillery waste was found to be unsatisfactory by Biaggi (11) due to the fact that almost all of the waste solids were in solution. Biaggi (11) and Sen et al. (92) reported no success with the chemical coagulation process as a means of treating rum waste. Even with extremely high dosages of ferric chloride, aluminum sulfate, lime, bentonite, and various other coagulants, no floc formation was observed.

Foam Separation

Foams may be used to remove substances dispersed in a liquid by several processes known collectively as foam separation (89). The common feature of all these processes is that separation is brought about by virtue of differences in the surface activity of the dispersed substances. In contrast to most other treatment processes, foam separations work most efficiently with dilute solutions.

Air or other gases bubbling through the liquid generate gas-liquid interfaces and result in foaming, which allows the interfaces to be collected. Surface-active substances are adsorbed onto the rising bubbles and concentrate in the foam. The substances then can be removed from the liquid.

Foam technologies applicable to the treatment of mostos include froth flotation for the removal of suspended solids, and foam fractionation for the removal of certain ionic species (metals, etc).

Certain problems and shortcomings are inherent to the use of foam separation for the treatment of mostos. These are:

- Foam separation technologies do not remove the soluble BOD from the waste stream. Since the principal components of mostos are soluble solids, further treatment of the waste stream would be required.
- Aerating mostos in a laboratory scale activated sludge study has resulted in excessive foaming (11). The addition of gas for foam separation would probably increase the foaming problem.
- No treatment studies have been completed on the application of foam separation technologies to mostos. No transfer technology exists for the foam treatment of similar wastes.

High Gradient Magnetic Separation (HGMS)

Magnetic separation techniques have been used since the nineteenth century to remove tramp iron and to concentrate iron ores. A variety of conventional magnetic separation devices are in wide use today. These devices generally separate relatively coarse particles of highly magnetic material containing large amounts of iron from non-magnetic media.

In recent years, magnetic devices have been developed which are capable of separating even weakly magnetic materials on the order of one micron in size at high waste stream flow rates. These so-called "high gradient magnetic separators" have been

designed to maximize the magnetic forces on fine, paramagnetic materials. The separations may be economically operated at process rates of up to several hundred gpm/ft^2 (1).

High gradient magnetic separators typically consist of a canister type device packed with fibrous ferro-magnetic material. They are magnetized by a strong external magnetic field surrounding the canister. Magnetic particles contained in fluids flushed through the canister are trapped on the edges of the magnetized fibers; non-magnetic particles pass through unaffected. This type of system has been demonstrated to work effectively in treatment of wastewaters containing low levels of impurities (1).

Magnetic components can be separated directly from waste streams, whereas non-magnetic contaminants (organics, colloids, etc.) must be given a "magnetic handle" by seeding the stream with finely divided magnetic seed material. Binding to the seed is accomplished by adsorption or coagulation.

Adsorption mechanisms are not fully understood, but are postulated to include chelation or surface bonding. The more practical technique is chemical coagulation of the contaminants into aggregates.

The potential for HGMS as an option for treating mostos appears to be unfavorable (116). The system relies heavily on the ability of alum or other flocculants to produce aggregate particulates. It has been demonstrated by Biaggi (11) and Sen et al. (92), however, the sedimentation was ineffective in treating mostos due to the high percentage of soluble constituents in

the waste stream. Further, the HGMS system seems favorable as a secondary or tertiary treatment module, handling waste streams whose soluble and particulate constituents are in relatively low concentrations. Mostos, on the other hand, has a soluble solids content of approximately 10 percent.

Reverse Osmosis

Reverse osmosis (RO) is a process for removal of dissolved solids in water and wastewater. The name is derived from the fact that, in the process, water is made to flow from a solution of higher concentration through a semi-permeable membrane to a solution of lower concentration, the opposite of natural osmosis. To cause this flow, a pressure greater than the osmotic pressure of the water or wastewater being treated must be applied. In practice, pressure considerably in excess of the osmotic pressure (400 psi is a common feed pressure in desalination plants) is required to obtain a water flux through the membrane, which is sufficiently large to make the process effective and practical (25, 26, 70).

The majority of research and development on RO to date has been concentrated on applications involving the treatment of brackish waters. However, some investigation of the applicability of RO to the treatment of municipal wastewater has also occurred. In addition, the cost of power and membrane replacement is high.

Pilot programs of RO treatment of wastewater have been conducted under EPA sponsorship.

In these studies it was found that substantial pretreatment was required prior to operation of the RO unit to remove dissolved organics, which otherwise fouled membranes. Pretreatment included chemical flocculation, coagulation, and filtration plus activated carbon adsorption. These constitute a very expensive pretreatment chain (25, 26, 98). Additionally, RO technology has been generally applied to waste streams in which total dissolved solids (TDS) were not in excess of 7,000 ppm. Mostos, on the other hand, has a TDS concentration of 77,400 to 85,600 ppm (93). Therefore, RO could not be implemented without some form of dilution, an option which is not realistic, especially so on St. Croix, an island which has suffered under drought conditions over the last several years. Therefore, reverse osmosis is not considered to be a feasible treatment technology for rum distillery wastes.

FEASIBLE TECHNOLOGIES

The following chapters present an analysis of each treatment technology and by-product recovery option. Throughout the text, rum distillery wastes have been identified by one or more of several synonyms. These are: rum distiller's wastes, rum slops, slops, and mostos. They are all defined as the combined liquid discharge resulting from fermentation of sugar cane molasses.

V. DISPOSAL TO A PUBLIC OWNED TREATMENT WORKS (POTW)

INTRODUCTION

Manufacturing facilities located within any of the 48 contiguous states and faced with one of several wastewater treatment options generally have a POTW in reasonably close proximity. If all options prove technologically or economically unfeasible, the POTW can be selected as a final choice. Decision parameters such as present and future surcharges, peak flows, BOD equivalents, increased or decreased plant production must necessarily be factored into the final selection of treatment alternatives. The rum industry on both Puerto Rico and St. Croix, the U.S. Virgin Islands, should, therefore, be examined with discharge to a POTW as a viable disposal option.

The following discussion presents such an examination on a site-specific basis.

Bacardi

The Bacardi Corporation is located approximately 1 1/2 mi northwest of Catano. It is bounded on the north by Ensenada de Boca Vieja and by the small village of Palo Seco, and to the east by San Juan Bay. The overall region lacks an adequate sewage system. This inadequacy presently causes gross pollution to the waters of the region from domestic and industrial wastewater sources (1). The Puerto Rico Aqueduct and Sewer Authority (PRASA)

has approved the Bayamon Wastewater System to provide sewage services to areas of Aguas Buenas, Catano, Toa Baja, Toa Alta, and San Juan. The wastewater system to be constructed will consist of trunk and branch sewers to collect wastewater from local sewer systems in existing and projected population centers through the year 2020. Included in this system is a treatment plant (POTW) designed to accomodate the regions expected wastewater. The POTW will be located in Barrio Palmas east of the Bayamon river channel in the municipality of Catano about 1 km from the sea coast of Ensenada de Boca Vieja. The plant will be constructed in 10 MGD modules and in treatment phases.

The initial phase will be designed for primary treatment with average capacity of 40 MGD; effluent will flow directly to the ocean through an ocean outfall to be constructed simultaneously with the trunk and POTW systems (5). Construction has not been implemented on either the POTW, or the ocean outfall. The future date for upgrading the POTW to secondary treatment is now known.

Previous analytical investigations of mostos reported an average total dissolved solids content of 7.77 percent, representing approximately 93 percent of the total solids present (93). Further, mostos is extremely high in soluble BOD and COD, with respective average ranges of 26,500 - 47,400 ppm and 72,000 - 92,000 ppm. The technological considerations of primary treatment are such that they would not be expected to remove any significant quantity of either. If discharged to the POTW, the Bacardi effluent would be diluted and discharged essentially untreated to the ocean. Therefore, the alternative of discharging to a POTW for

the purposes of pollutant reduction is effectively not available to Bacardi.

Puerto Rico Distillers

Puerto Rico Distillers is located on the western edge of Arecibo, a city which currently discharges its domestic and industrial streams directly to the ocean. Construction has reportedly begun on a trunk line system to route domestic and industrial wastes to a primary POTW (also under construction) located on the eastern side of Arecibo (47). There are reportedly no present plans to install a trunk line to the western extremities of the city - the location of the distillery. Design capacity, estimated completion data, future timetable for upgrading to secondary treatment, etc., were not available in the literature reviewed and from personal correspondence. Further, since the mostos discharged from Puerto Rico Distillers is virtually identical to that of Bacardi, removal of any significant quantities of pollutants would not be expected. Therefore, discharge to a POTW for Puerto Rico Distillers is not a viable option.

Virgin Islands Rum Industries, Limited (VIRIL)

The VIRIL plant is located in a rural area about 5 mi east of Frederiksted, St. Croix. A small POTW with primary treatment is located several miles east of the distillery, on the eastern edge of the airport property. Recently, a secondary module was constructed several hundred yards from the primary facility and is currently in operation. The POTW serves several newly developed housing areas and the airport facilities. Current average flow is about 0.5 MGD; design capacity is 4 MGD (113). Secondary effluent

is discharged to the ocean through a 48 in diameter, 9,000 ft outfall (71).

VIRIL and POTW personnel have conducted preliminary discussions concerning the possibility of pumping via pipeline, the mostos and otherplant wastestreams to the POTW. The POTW personnel suggested that considering the high strength and waste volume (population equivalent is approximately 90,000), the only acceptable method of receiving mostos would be in a diluted state so that the BOD would not exceed that of domestic sewage (200 - 300 ppm BOD) (71). Fresh water, sufficient for the necessary dilution, however, is not available on this water-starved island.

Dilution with seawater is not possible due to the toxic effects of sodium chloride on POTW microorganisms. Therefore, discharge to the POTW is not a viable alternative to VIRIL.

SUMMARY

Discharge of mostos to a POTW is not a viable or practical alternative for any of the rum distillers in Puerto Rico and St. Croix, U.S. Virgin Islands

VI. OCEAN DISPOSAL

Outfall pipes into the ocean are intended to return contaminated fluids to the environment in a way that promotes adequate transport and dispersion of the waste fluids. Urban and industrial communities who discharge their complex mix of wastes to the ocean are typically located along the shallow edge of the ocean, with often tens or even hundreds of kilometers of contaminated shelf between the shoreline and the deep ocean. The bottom slope on the shelf is typically less than one percent. Thus, outfalls extending several kilometers offshore discharge into a body of water of large lateral extent compared to the depth.

The decay times of the wastes are important in the choice of effective discharge strategies. For example, the problems of very persistent contaminants such as DDT cannot be alleviated by dispersion from an outfall. Such wastes must be contained at the source and prevented from entering the environment. On the other hand, degradable organic wastes may be effectively disposed of through a well-designed ocean outfall. Since the typical decay time is only a few days, potential problems are only local and not regional or global.

Coastal waters are biologically productive because of the infusion of nutrients from nearby land masses and upwelling of nutrient-rich bottom water. Man's additions of organic nutrient

material cause perturbations in the coastal ecosystems. Most past problems have resulted from excessive waste loadings very close to shore or in estuaries with poor circulation patterns, that is, in cases where man's effects have been overwhelming. The current practice of outfall design for large systems is to build long pipelines (>3 km) on the open coast to depths up to 70 m, and to install large multiple-port diffusers. They can achieve large initial dilutions of the order of 100 to 1 and produce submergence of the entire wastewater cloud below the surface when there is sufficient ambient density stratification. This practice has greatly improved local water quality at relatively low costs (55).

A typical outfall consists of a submarine pipeline roughly perpendicular to the shoreline. In shallower water, it is buried under rip-rap for wave protection and, at greater depths, it is laid on the ocean floor with ballast rock on either side. At the far end, there is usually a diffuser section, a manifold with many small holes to distribute the flow throughout a large ocean area.

Effective utilization of the ocean for assimilation of wastewater depends on both engineering and environmental considerations. Engineering feasibility for ocean diffusion depends upon good jet mixing and oceanic convection and diffusion. Important factors are ocean currents, density stratification, waste decay constants, and the use of multiple-jet diffusers.

SUMMARY OF CONSIDERATIONS FOR AN OCEAN OUTFALL

Initial planning for an ocean outfall should include an oceanographic survey in the vicinity of possible discharge sites to determine (16):

1. Currents (direction, magnitude, frequency, variation with depth, relation to tides, water displacements)
2. Densities (variation with depth determined from salinity and temperature data and standard tables)
3. Submarine topography, geology, and bottom materials
4. Marine biology
5. Turbidity
6. Dissolved oxygen, etc.

The final site selection for an ocean outfall is usually based on general characteristics of the coastal waters and on topography of the drainage area. Details of diffuser design are developed after the general site is chosen.

DESIGN FOR DIFFUSION

Since the objective of an ocean outfall is to disperse waste effluent in the ocean, first consideration is given to the analysis of diffusion. From such an analysis one establishes a satisfactory length for the outfall from the shore, a desirable diffusor pipe arrangement and the approximate number and spacing of ports.

There are essentially three stages of diffusion or turbulent mixing of wastes discharged into the ocean (16):

1. Initial jet mixing (considering jet strength, currents, and density differences)
2. Development of a homogeneous diffusion field

3. Turbulent diffusion of waste field as a whole due to natural oceanic turbulence.

An excellent treatment on the above mentioned stages of diffusion is presented in papers by N. H. Brooks (16, 17, and 18). Some of the highlights of these papers are discussed here.

Port Design

The outlet ports may quite satisfactorily be circular holes in the side of the pipe without nozzles or tubes or other projecting fittings. For optimum dilution, the jets should discharge horizontally, with no initial upward velocity. The inside of the port should be bell-mouthed to minimize clogging and to provide a discharge coefficient which will remain constant over a period of years.

Number of Ports

Research has shown that a multiple-outlet diffuser greatly enhances the possibility of generating a submerged waste field (16). If the waste is discharged at a single port or "en masse," its dispersion and dilution will be slower than if it is discharged over a large area through a number of ports. In fact, without the use of multiple-outlet diffusers, other conditions being equal, much longer outfalls into deeper water are necessary to provide the same degree of dispersion. In general, the greater the depth (volume), the greater the dispersion.

Velocity in Diffuser

The flow velocity in all parts of the diffuser should be high enough to prevent deposition of any residual particles. For settled sewage, velocities of 2 to 3 feet per second at peak flow

are adequate (but borderline). If deposition takes place in any part of the diffuser over an extended period of time, the cross section of the pipe may become so constricted that locally the velocity will be reduced, a cycle that will accelerate the in-pipe deposition and clogging process.

Flow Distribution

The outflow between the various diffuser ports should be fairly uniform. If the diffuser is laid on a sloping sea bottom, it will be impossible to achieve uniform distribution between ports for all flow rates. In such cases, it is desirable to make the distribution fairly uniform at low or medium flow, and let the deeper ports discharge more than the average port discharge during high rates of flow.

If waste pumping is necessary or the available gravity head is limited, the total head loss in any diffuser should be kept reasonably small. Additional head losses of a few feet are usually adequate.

Prevention of Seawater Intrusion

All ports should flow full in order to prevent the intrusion of seawater into the pipe. Seawater entering the pipe will be stagnant and will tend to trap grit and other settleable matter, reducing the hydraulic capacity of the diffuser.

SITE SPECIFIC CONSIDERATION

The following section presents ocean disposal options available to each rum distiller predicated on the following assumptions:

1. The chemical and physical characteristics of mostos are such that ocean disposal results in minimal environmental

harm to local ocean flora and fauna.

2. Practice of removing "heads" and "fusel oils" is continued by Puerto Rico Distillers and VIRIL and is adopted by Bacardi.

Bacardi Corporation

The Bacardi Corporation manufacturing facility (Figure VI-1). is located just south of the town of Palo Seco, on a peninsula of land bounded on the east by San Juan Bay and on the west by both the Palo Seco Thermoelectric Plant and the Bayamon River. Approximately one mile southeast of the plant is the town of Catano. The Bayamon River currently receives its water from the Thermoelectric Plant (approximately 100 MGD - cooling water) and from Bacardi (approximately 0.2 MGD - condensate, boiler blow down, cooling water, fermenter washings, etc.)

Design has been submitted and approved for the construction of the Bayamon Wastewater Treatment Plant (initial average flow of 27 MGD - primary treatment only), and an ocean outfall accepting the combined flow of the proposed Bayamon and existing Puerto Nuevo Treatment Plants. The combined effluent will be discharged through a 120-in-diameter concrete pipe extending 4,000 ft into the Atlantic Ocean to a depth of about 160 ft below mean ocean sea level. The wastewater will be diffused to the ocean through ports located along two 1,000-ft diffusers. Initial dilution is estimated to be about 150-175:1. The outfall pipe (Figure VI-1) will be located on the far eastern edge of the Bacardi property.

If Bacardi were to utilize this newly designed system, two options would be available:

Option 1: Discharge to the Bayamon Wastewater Treatment Plant. Bacardi would discharge its combined effluent (approximately 0.5 MGD) to the proposed primary treatment facility. The Bacardi effluent would be combined with other domestic and industrial wastes, thus affecting dilution, and would be discharged to the ocean. However, the nature of mostos is such that the high BOD and COD loads are a function of the high percentage of solubilized organics (nonfermentable sugars, acids, etc.) and would not be appreciably reduced by primary treatment. Hence, the mostos would essentially pass through the primary system unchanged.

Option 2: Discharge directly to the outfall. Initial flow through the outfall pipe is anticipated to be 40 MGD. By running pipe across the plant grounds and connecting directly to the outfall pipe, the 0.3 MGD Bacardi mostos stream would receive an instantaneous dilution of 130:1. Assuming that the diffuser operates within its design limits, the Bacardi effluent will be further diluted upon discharge to the ocean. The overall mostos dilution is estimated to be 20,000:1.

The difference between each of the above alternatives is basically one of semantics. Both dilute the waste to the same degree with final discharge to the ocean. However, in the first case, discharge is technically to a POTW; in the latter, discharge is directly to the ocean without benefit of "treatment".

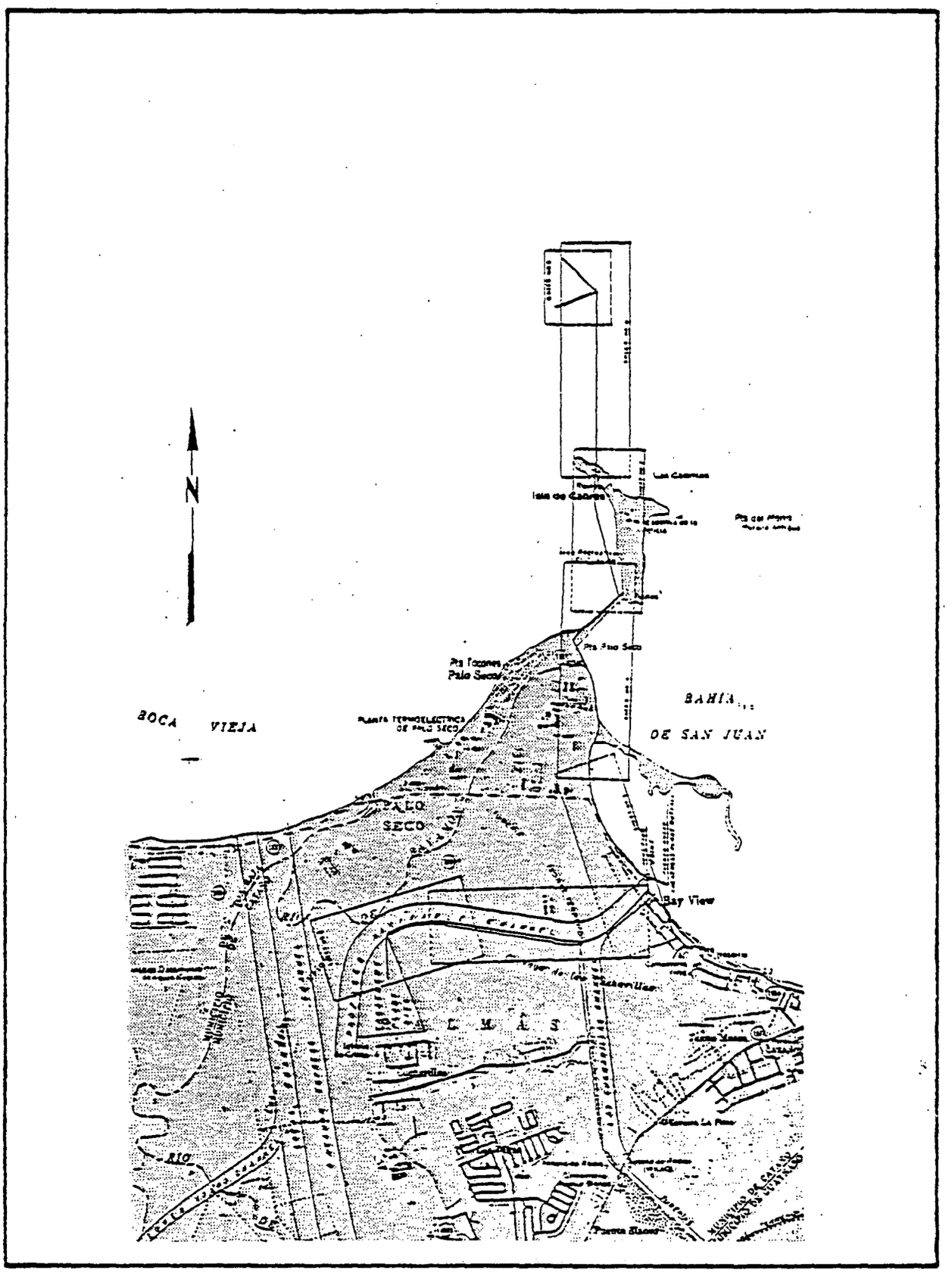

Figure VI-1. Proposed ocean outfall. San Juan, Puerto Rico (Bacardi).

Puerto Rico Distillers

Puerto Rico Distillers is located in the western section of Arecibo, bounded on its eastern, western, and southern borders by encroaching city development and to the north, by the Atlantic Ocean (Figure VI-2). Two options are presented.

Option 1: 1,600-ft outfall.

A 6-in-diameter concrete (C = 130) pipe will extend 1,600 ft into the Atlantic Ocean to a depth of approximately 100 ft. Based on a volume of 0.4 MGD (280 gal/min), effluent would flow at a velocity of about 3.2 ft/sec. Head loss was calculated to be 7.4 ft/1,000 ft or 11.8 ft for the entire 1,600-ft outfall. Pumping requirements are estimated at 1.1 brake horsepower (BHP).

Option 2: 2,000-ft outfall.

A 6-in-diameter concrete (C = 130) pipe will extent 2,000 ft into the Atlantic Ocean to a depth of approximately 150 ft. Based on a volume of 0.4 MGD (280 gal/min), effluent would flow at a velocity of 3.2 ft/sec. Total head loss would be 14.8 ft. Pumping requirement is estimated at 1.4 BHP.

Initial dilution for either option is estimated at 50:1. If the density of mostos could be lowered to less than that of seawater (for example, by diluting mostos with other lower

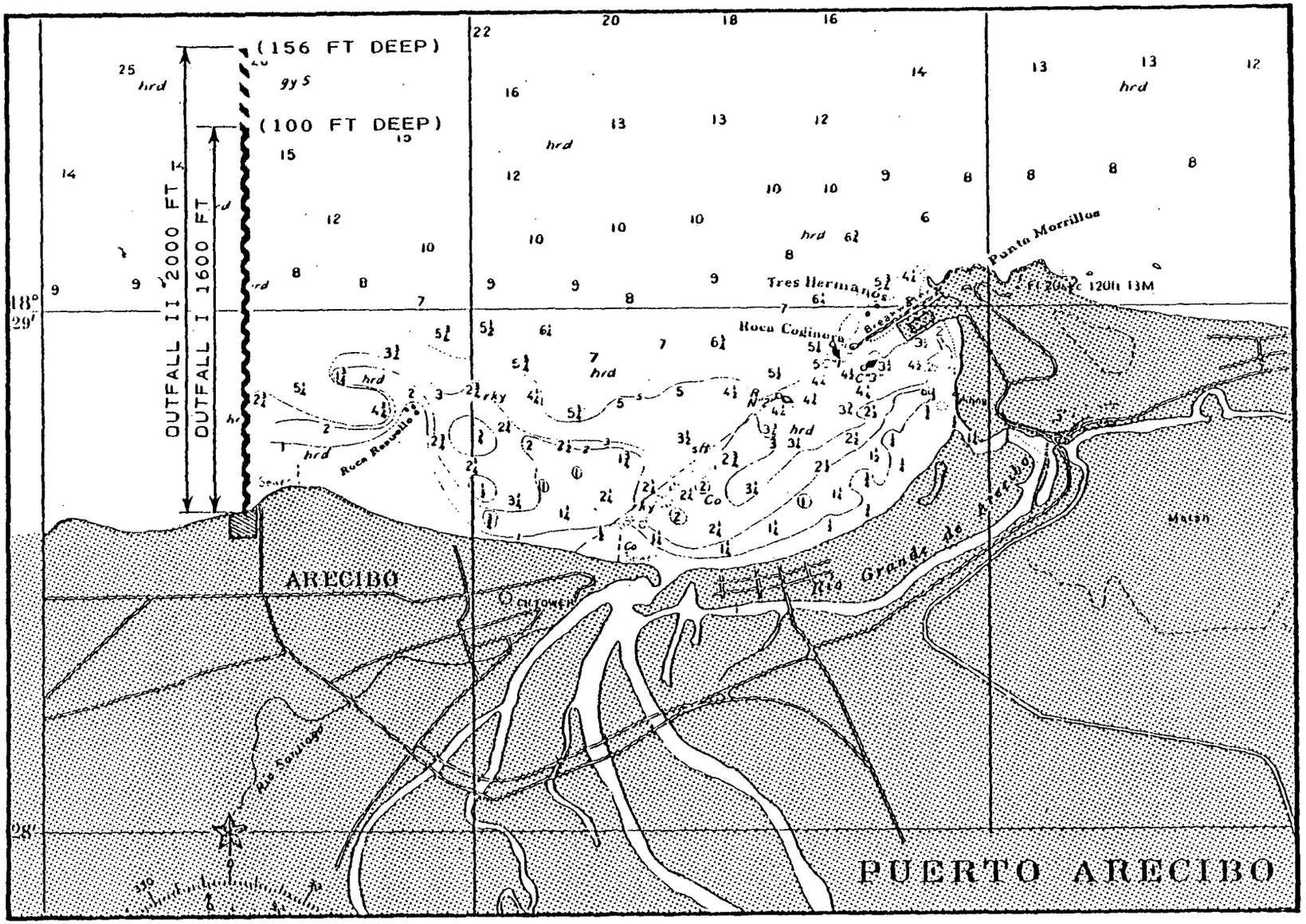

Figure VI-2. Proposed outfalls for Puerto Rico Distillers, Arecibo.

specific gravity waste streams), mixing would be expected to increase. If the outfall is extended to 3,000 ft, the waste stream would be discharged at a depth of approximately 400 ft.

Virgin Islands Rum Industries, Limited (VIRIL)

The VIRIL plant is located in the southwestern area of St. Croix, approximately 1-1/2 mi east of Long Point. Specifically, the plant is on the Diamond Estate of Princess Quarters approximately 1-1/2 mi north of the ocean. The mostos discharge pipe, originally a sewer outfall, runs from the plant, across the estate known as Betty's Hope, and terminates approximately 1,000 ft in the ocean at a depth of about 15 ft (see Figure VI-3). It is worthy of note that the ocean slopes very gradually throughout this area so that any outfall pipe designed for depths of 100 ft is reached, the degree of slope increases rapidly. For this reason, only one option has been examined.

Option 1: 150-ft outfall.

An outfall to a depth of approximately 150 ft. Approximately 22,000 ft of 4-in-diameter concrete pipe would be required. VIRIL's estimated 140-gal/min effluent would flow at 3.5 ft/sec. Head loss is estimated at 13.6 ft/1,000 ft or 300 ft for the entire net fall. Pumping requirements would be equivalent to 14.2 BHP.

Due to the rapid slope of the ocean bottom at the outfall termination point and the density limitations of the waste stream, diffusion ports would probably not be required. Rather, the waste stream could be permitted to exit directly from the end of the

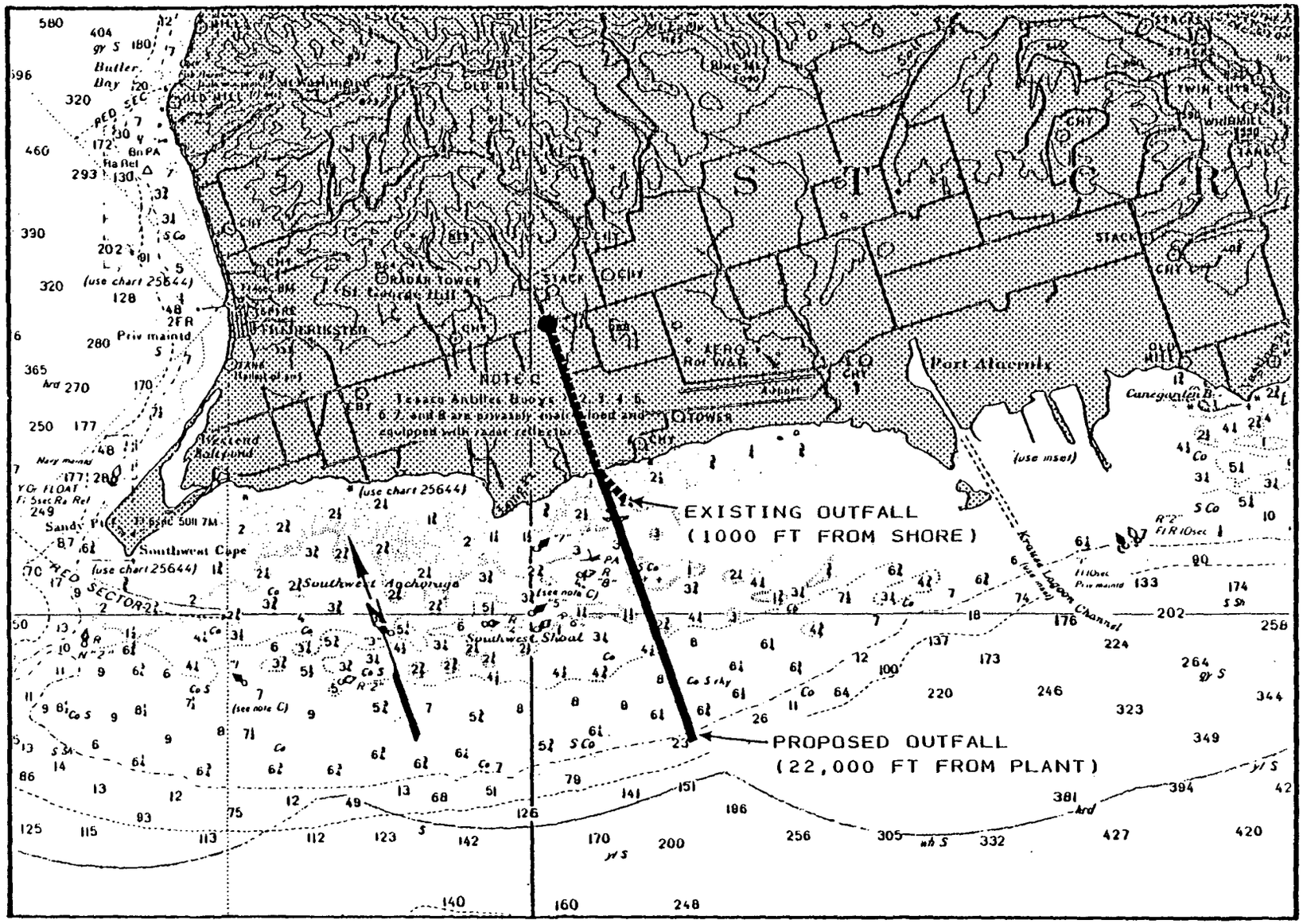

Figure VI-3. Proposed outfall for VIRIL.

outfall. Dye studies would have to be performed to investigate the velocity and direction of the ocean currents to ensure that the stream would not be diffused into the shallower areas.

The continuation of mostos disposal to the ocean will be largely dependent upon the results of marine biological studies currently in progress. Consequently, a complete economic analysis, including capital and O&M costs for a pipeline, is premature. However, to place the economics of disposal in proper perspective to other disposal technologies, pipeline estimates are presented for Puerto Rico Distillers and VIRIL. It is assumed that costs include pipe, connectors, ballast and/or cement (for anchoring pipeline to ocean floor), and labor for installation. Further, it is assumed that the above-mentioned costs for a 6-in-diameter pipe will be approximately $125/ft and for a 4-in-diameter pipe, $100/ft (46). Extending these unit costs to the pipeline lengths shown in the preceeding section gives the following:

- Puerto Rico Distillers

  Option 1 (1,600-ft outfall - 6-in-diameter pipeline)

  1,600 x $125 = $200,000

  Option 2 (2,000-ft outfall - 6-in-diameter pipe)

  2,000 x $125 = $250,000

- VIRIL

  Option 1 (22,000-ft outfall - 4-in-diameter pipe)

  22,000 x $100/ft = $2,200,000

Costs for Bacardi were not estimated because they would be utilizing the proposed POTW outfall.

VII. LAND DISPOSAL

INTRODUCTION

Soil, with its tremendous surface area and varied microbial population, has been viewed as a physical, chemical, and biological filter for waste materials (98). The waste is retained by the soil matrix, and the organic fraction of the waste is eventually decomposed by the soil microorganisms (79,98).

Land application is a practice whereby wastes are applied to the soil surface and incorporated into the top 6 to 12 in of soil. As in farming practices, only the surface soil is utilized, and the process of waste assimilation is aerobic. Optimal degradation of the added wastes requires environmental conditions that are similar to those needed for raising a crop: adequate amounts of sunlight, water, nutrients, and oxygen. In addition, land application and farming employ similar types of equipment.

Wastes may be applied to soils for a variety of reasons. Principal among these are the following:

1. Agricultural Utilization - as a soil amendment, utilizing the available organic and inorganic nutrients to enhance the growth of certain crops.
2. Land Reclamation - as a soil amendment to add organic and inorganic nutrients to distressed or submarginal lands.

3. Land Farming - as a means to dispose of wastes on a dedicated piece of land, whereby, the organic constituents are degraded by natural processes (oxidation and reduction via sunlight) and the inorganics are trapped within the surface soil matrix.

The objective of this investigation is to explore the concept of land disposal of mostos and to discuss in detail, that particular method of land application which is technologically and economically most feasible. As will become apparent in the following pages, land farming for all three distillers studied and agricultural utilization for Puerto Rico Distillers, were selected to offer the most feasible land disposal options. Agricultural utilization for Bacardi and VIRIL and land reclamation for all three were excluded from more serious considerations for the following reasons:

- Agricultural utilization - from the literature reviewed, research relating the effects of mostos on crop growth could not be found. However, two other rum distilling facilities, Serralles in Mercedita, Puerto Rico and Bacardi in Tultitlan, Mexico have successfully disposed of mostos by distribution (after dilution with fresh irrigation water) through canals irrigating nearby sugarcane fields. In this instance the feasibility of distillery discharge depends upon the availability of nearby sugar cane fields. Puerto Rico Distillers is the only distillery in a similar situation in such a favorable locale.

Agricultural utilization of mostos to other crops cultivated in the islands is dependent on significant crop land availability and the adequate research expressing the effects of mostos on such crops (affinity to absorb heavy metals, organics (toxic or otherwise), pesticides, etc....). Currently, neither of these are available. The reader is referred to the section, Estimation of Mosto Application Rates, for a more detailed explanation of the Serralles and Bacardi, Mexico land disposal operations.

Land Reclamation - land reclamation programs are typically employed in a situation where a waste generator is in close proximity to sub-marginal or distressed land, e.g., areas that have been heavily mined. These circumstances are not known to exist within any practical distance of three distilleries.

LITERATURE REVIEW

From the literature reviewed, the only research that could be found presenting relationships between mostos and soils was that of Raul Perez Escolar (75-78). A series of four articles resulting from his studies was published in the Journal of Agriculture of the University of Puerto Rico in 1966 and 1967. Summarized, they are as follows:

- "Reclamation of a Saline-Sodic Soil by Use of Molasses and Distillery Slops," (July 1966) - An application of 2.3 ac-in of mostos to a saline-sodic Faith clay of southwestern Puerto Rico was shown to lower both the soil conductivity and exchangeable sodium. Further, he demonstrated

that the soil was reclaimed, resulting in an excellent stable soil structure (75).

- "Use of Molasses and Distillery Slops with Sulfur for the Reclamation of a Saline-Sodic and a Sodic Soil from Puerto Rico," (January 1967) - Tests and results similar to the above cited references with sulfur included to enhance reclamation. Testing was expanded to include both a Guanic clay and a Faith clay (78).
- "Stability of Soil Aggregates Treated with Distillery Slops or Blackstrap Molasses," (July 1966) - Mostos, applied at a minimum of 1/4 ac-in, was shown to produce a long lasting and favorable effect on soil aggregate stabilization which persisted after the growth of four consecutive crops (77).
- "Separation and Characterization of the Active Soil-Aggregating Agent Present in Distillery Slops," (October 1967) - The soil aggregating and stabilizing agents were found to be present in the 80 percent alcohol insoluble fraction of mostos with a composition of a mannose-bearing polysaccharide (6 percent), protein (7 percent), and a caramel (87 percent) (76).

References to mostos decomposition mechanisms and kinetics were not available from the materials reviewed. Further, references to land disposal systems could not be found in this literature. However, several personal communications(33, 103, 104) revealed the following land application programs:

- Serralles - Mercedita, Puerto Rico

  The Serralle's rum distillery is located in southwestern Puerto Rico in Mercedita, several miles east of Ponce. It is situated on approximately 4,000 acres, all of which is owned by the Serralles family, except for some acreage on which a sugar mill is located. Annual production of rum is approximately 4 million proof gallons. Estimated mostos flow is approximately 100,000-150,000 gal/day. Since 1935, mostos has been discharged through a system of canals which supply irrigation water to about 400 acres of sugarcane. The mostos is combined with other plant wastes, achieving final dilutions ranging from 1/2 (other plant wastes/mostos) to 5/1 (104). This combined stream is pumped to a central irrigation station which further dilutes the wastes prior to final field discharge. The combined plant wastes at this point are diluted approximately twofold. Irrigation water is supplied by an adjacent river originating in the mountains north of the plant. In 1975, a system of peripheral ditches was constructed to prevent mostos runoff during periods of heavy rain. Soil and groundwater monitoring programs have not been established at those sites although, no deleterious effects have been reported for either the soil or sugarcane (103, 104).

- Bacardi, Tultitlan, Mexico - Bacardi operates a rum distillery in Tultitlan, Mexico (near Mexico City). Five

hundred acres of sugarcane are located approximately one mile from the plant. There is no sugar mill present on the site, which would provide processing water for further mostos dilution. The mosto stream is combined with other plant wastes achieving a dilution of 5/1 (other plant wastes/mostos). The combined solution is mixed with fresh irrigation water further diluting the mostos resulting in a final concentration ranging from 11/1 - 19/1. The mixture, in turn, is distributed throughout the fields (via canals and ditches) simultaneously supplying water to the sugarcane crop and disposing of the mostos. This process has reportedly been in operation for 17 yr, the only apparent problems being occasional ponding, resulting in some foul odors. The native soil is alkaline and the acidic nature of mostos is reported to aid in maintaining near neutral soil conditions (33).

- Other Mexican Operations - Other distilleries in Mexico reportedly discharge their rum wastes in a similar manner but are able to achieve much greater dilutions as a result of added sugar mill processing water. Mostos dilutions at these operations are reported to range from 100-500 to 1.

COMPONENTS OF A LAND DISPOSAL SYSTEM

The implementation of a successful land disposal program is dependent upon the interrelationships of many variables including the selection of a disposal site, the nature of the wastes being

disposed, method of waste application, and economics. More specifically, these considerations involve the following parameters:

- Selection of Disposal Site
  - Land area required
  - Land availability and cost
  - Proximity to distilleries
  - Proximity to homes and commercial establishments
  - Ready access from all-weather roads
  - Climate (rainfall, freedom from flooding, prevailing wind direction)
  - Field slopes and general topography
  - Hydrogeology (location of groundwater)
  - Soil characteristics
  - Types of crops historically planted
  - Ultimate land use of disposal site.
- Waste Characteristics
  - Quantities of waste available
  - Final waste disposal form (liquid, concentrate)
  - Physical, chemical, biological properties
  - Variability of constituents.
- Application of Wastes
  - Methods of transportation (irrigation pipe, tanker, rail car, barge..)
  - Methods of application (spreading, spraying, ridge and furrow irrigation, subsurface injection, etc...)
  - Hydraulic loading limitations

- Metals loading, pH, nutrient constraints
- Existing local and federal regulations
- Monitoring requirements.

- Economics
  - Capital costs (land, equipment, installation...)
  - Operation and maintenance costs
  - Overall disposal costs (total and factored).

SITE DESCRIPTIONS

Puerto Rico

Puerto Rico has an area of approximately 3,435 sq mi. The island has three principal physiographic divisions. The most extensive consists of the complex mountain ranges, which include nearly all of the interior of the island. The less extensive are the playa plains and the coastal plains, which circle the outer edge of the island in a ribbonlike band. The elevation ranges from sea level to 4,398 ft above, and the relief ranges from level to precipitous. Ecologically, the complex mountain ranges are of volcanic origin, and the coastal plains and playa plains are sedimentary. The principal rocks include several types of Tertiary and Cretaceous limestones shales, volcanic ash, lava, granite, andesite, sandstone, serpentine, tuff, and conglomerate (86). There are 358 soil types, phases, and miscellaneous land types recognized on the island, representing a total of 115 soil series (86).

The population densities, which vary greatly from place to place, create the most serious social and economic problems confronting the government. A high proporation of the island area consists of shallow, stony, steep, or submarginal land (86).

The present population is estimated to be approximately 3.4 million (1976-3.2 million). Projections to the year 2000, suggest a population as high as 5 million (46). Available land, therefore, is anticipated to be of premium value and reserved for the growth of crops critical to the welfare of the people and the government.

The climate is nearly ideal for a 12-month growing season. It is tropical, uniform, and oceanic, and nearly ideal conditions exist for a heavy precipitation over all but the southwestern and the extreme northwestern parts of the island. The average annual precipitation ranges from less than 30 in in the southwestern part to nearly 200 in on the high peaks in the Sierra de Luquillo. Most of the cultivated crops are irrigated in districts receiving less than 45 in of mean annual rainfall, and sugarcane and grapefruit are irrigated in districts receiving less than 60 in. The climate is nearly ideal for the production of such crops as coffee, sugarcane, pineapples, bananas, mangoes, coconuts, yautias, and yuca, but it is poor for alfalfa and berries. Such crops as wheat, oats, barley, apples, pears, and peaches are not grown. Rice is well adapted to the climate and to many of the soils, and will probably be cultivated to a much greater extent in the future (86).

Rainfall in the San Juan and Arecibo areas has averaged about 60 in/yr, evaporation, about 82 in/yr.

Bacardi--

The Bacardi Corporation is located approximately 1 1/2 mi northwest of Cataño. It is bounded on the north by Ensenada de Boca Vieja and the village of Palo Seco; on the east by San

Juan Bay; and on the immediate west by the Palo Seco Thermoelectric Plant. Further west is the small village of Levitown. To the south are some marsh lands reserved for industrial park development and town expansions(5). Therefore, the only direction available for Bacardi to land dispose their wastes is west. Some acreage once used for sugarcane production is approximately 4-5 mi west of the plant, but information as to the amount of land, ownership, cost, future planned use, etc., was not available from the sources contacted.

Puerto Rico Distillers--

Puerto Rico Distillers is located on the western edge of Arecibo. The plant is bounded on the north by the Atlantic Ocean, and on the east and south by the encroaching fringes of the city. Sugarcane fields, owned by the government are located approximately 10 mi west of the plant. The planned use, ownership, etc., of land between the sugarcane fields and the plant was not available from the sources contacted.

St. Croix, U.S. Virgin Islands

The U.S. Virgin Islands include the islands of St. Thomas, St. John and St. Croix. The last is the largest of the three with an area of 84 sq mi.

The topography is somewhat different from the other two with a broad expanse of low, relatively flat land running along the south 2/3 of the island. A range of hills, ranging in elevation from about 500 ft to more than 1,000 ft, topped by Mount Eagle at 1,165 ft, runs along the northern coast. In the eastern

end of St. Croix is found another group of slightly lower hills with a maximum elevation of about 860 ft. The relatively small area covered by hills on St. Croix results in rather steep slopes down to the Carribbean in the north and to the level areas to the south. St. Croix is the only U.S. Virgin Island with any sizable expanse of flatland suitable for farming. Here, sugarcane, which was the principal crop, has been abandoned (84). Subsistence crops are now a minor effort. Some cattle are raised for milk and meat (84).

In St. Croix, industrial growth has become a significant factor in the island's economy (84). With the downgrading of agriculture, industrial complexes have been expanded to include the petrochemical industry and refinement of aluminum.

One of the principal causes of concern in the U.S. Virgin Islands is the short supply of water. Rainfall, while averaging about 40 in annually (rainfall has been well below average over the past several years) over most of the area, is insufficient. This is due partially to a high evaporation rate (average about 73 in/yr) and rapid runoff.

In an effort to utilize available water efficiently, most homes and business establishments catch rainwater on the roofs and pipe it to cisterns. Generally, during the drier portion of the year, it is necessary to carry water by barge from Puerto Rico.

Virgin Island Rum Industries, Limited (VIRIL)--

The VIRIL plant is located about 5 mi east of Frederiksted, St. Croix. Unlike Bacardi and Puerto Rico Distillers, VIRIL is

situated in an area which is just beginning to show signs of development. The 25-ac plant is in a rural area surrounded by 400 to 500 ac of uncultivated land (not owned by VIRIL). Some evidence of urban expansion, however, can be seen. To the south and east about 1/2 mi away, several small housing developments have recently been constructed, and to the north, approximately 1/2 mile, ground has been dedicated to the construction of a hospital. The area south of the plan extending to the Carribbean (approximately 1 mi) is not inhabited and is covered with brush, trees, and natural grasses.

WASTE CHARACTERISTICS

In the processing of rum, wastewater streams are generated from four or five sources. Mostos has been previously identified as the stream representing approximately 66 percent of the flow, and 98 percent of the pollutants(93). For the sake of the following presentation of data, it is assumed that only the mostos stream will be land disposed.

Table VII-1 presents the chemical characteristics of mostos but on a dry weight basis. It should be noted that approximately 69 percent of the dry solids are in the form of dissolved volatiles - namely organics. While the exact nature of these are uncertain, they are most likely a mixture of sugars, organic acids, amino acids, proteins, polysaccharides, and various organic salts. All are decomposable but the kinetics and degradation times are not known. Total Kjeldahl nitrogen is 1.36 percent (dry wt basis), indicating that sufficient nutrients are probably present to

TABLE VII-1. COMPOSITION OF SELECTED CONSTITUENTS IN MOSTOS ON A DRY-WEIGHT BASIS.

Parameter	Previously Reported*	Expressed on Dry-Weight Basis
	%	
Total solids	8.35	
Total dissolved volatile solids	5.79	69.3
Total Kjeldahl nitrogen	0.114	1.36
Calcium	0.209	2.50
Potassium	0.426	5.10
Chloride	0.211	2.53
Sulfate	0.412	4.93
	mg/ℓ	
Zinc	9.89	118
Cadmium	0.18	2.16
Lead	1.10	13.2
Copper	32.8	393
pH	4.36	

*(93)

sustain a reasonable level of bacteriological activity.

Heavy metals are in the ranges typically reported for municipal sewage sludge - another waste often disposed to land. On the other hand, calcium, potassium, chlorides and sulfates are extremely high and would probably have adverse effects on germination of seeds and subsequent growth of certain crops.

Table VII-2 presents estimated annual quantities of mostos generated by each distillery

ESTIMATION OF MOSTOS APPLICATION RATES

Agricultural Utilization

As previously mentioned, both Bacardi (Tultitlan, Mexico) and Serralles (Mercedita, Puerto Rico) have active and long-termed agricultural utilization programs which involve irrigation canal distribution of mosto through sugarcane fields. Both of these plants have one thing in common - they have sugarcane fields

TABLE VII-2. ANNUAL QUANTITIES OF MOSTOS GENERATED BY BACARDI, PUERTO RICO DISTILLERS, AND VIRIL

Distiller	Average Daily Discharge (gals)	Average Number of Operating Days	Annual Generation of Mostos (gals)	Total Annual Dry Solids Generated* (Tons)
Bacardi Corp.	300,000	300	90,000,000	33,066
Puerto Rico Distillers	200,000	200	40,000,000	14,696
VIRIL	100,000	200	20,000,000	7,346
Total			150,000,000	55,110

*Based on 8.35 percent solids

in close proximity to their distilleries. Of the three distilleries to which this study is addressed, only Puerto Rico Distillers is located in such an area. It is reported that approximately 4,000 or more acres of government-owned sugarcane fields are within a five-mi radius of Puerto Rico Distillers (66, 103, 104). If arrangements could be made with the owner-operators of these fields, it may be possible to transport (via pipeline) the entire plant waste stream to these fields where, upon further dilution with fresh water, the combined streams could be used for irrigation of the sugarcane.

From existing data on both the Bacardi (Tultitlan) and Serralles disposal operations, estimates of mosto application rates (dry weight basis) and irrigation rates were made (33, 103, 104). These are presented in Table VII-3. Assuming that mostos is equally distributed over the available acreage, the mosto application rate is equivalent to 20.2 and 28.7 dry T/ac/yr at Bacardi and Serralle's respectively. Similarly, from the information available, annual irrigation application rates of the diluted mosto streams were calculated to be 30.7 ac-in for Bacardi and 10.2 ac-in for Serralles. The amount of irrigation water supplied by natural rainfall is approximately 30 inches at Serralles, but was not available for Bacardi.

It would seem, therefore, that Puerto Rico Distillers, with approximately 4,000 acres of sugarcane in reasonably close proximity may have a favorable disposal alternative not available to the others. Further, Puerto Rico Distillers' annual mostos discharge is estimated to be approximately 40,000,000 gals - about

TABLE VII-3. ESTIMATED ANNUAL MOSTOS AND IRRIGATION WATER APPLICATION RATES FOR BACARDI (TULTITLAN, MEXICO) AND SERRALLES (MERCEDITA, PUERTO RICO)

Plant	Estimated Annual Mostos Production* (million gal)	Estimated Fresh Water: Mostos Ratio	Sugar Cane Acres	Estimated Annual Mostos Loading Rate† (T/ac) (dry weight basis)	Estimated Annual Irrigation Water Supplied to Dispose of Mostos (ac-in/yr)
Bacardi	27.5	15:1	500	20.2	30.7
Serralles	31.3	3.5:1	400	28.7	10.2

*Based on 250 operating days/yr.
†Assuming mostos with specific gravity of 1.06 (8.8 lb/gal).

20 to 30 percent higher than Serralles or Bacardi, Tultitlan. The greater amount of sugarcane acreage available to Puerto Rico Distillers suggests that mostos could be discharged to the fields on an even lower dry weight basis than is currently estimated for Serralles and Bacardi, Tultitlan.

LAND FARMING

There are two principal considerations which will determine the maximum waste application rate for a land farming operation:

- Quantity of heavy metals in the mostos applied
- Hydraulic capacity of the site (the ability of the soils to absorb moisture in addition to the annual precipitation).

A third consideration, land requirements, will determine the practicality and feasibility of a land farming program.

Heavy Metals--

While there are no criteria governing the application of mostos to soil, the presence of heavy metals suggests a similarity to municipal sewage sludge, for which there are recommended limitations. In most situations mostos will be applied to soils in a manner analagous to sludge. Therefore, regulations and practices which control the use of sludge will be applied throughout this analysis. Table VII-4 presents the U.S. Department of Agriculture (USDA) recommendations for the total amounts of four metals contained in sludge, which may be added to agricultural soils (54). The calculations in column four were derived from the following formula:

$$\text{mostos (dry T/ac)} = \frac{\text{Net. max allowable metal loading (lb/ac)}}{\text{ppm metal in mostos (dry wt)} \times 0.002}$$

TABLE VII-4. ESTIMATION OF MAXIMUM ALLOWABLE HEAVY METALS AND SLUDGE LOADINGS FOR AGRICULTURE CROPS AND MOSTOS LOADINGS FOR LAND FARMING

Metal	USDA Maximum Allowable Metal Loading*	Estimated Amount of Metal in Soil at the Site	Maximum Allowable Metal Loading for Agricultural Soils	Maximum Allowable Mostos Loading for Agricultural Soils	Maximum Allowable Mostos Loading for Land Farming†
		lbs/ac		Tons/ac	
Lead	2,000	25	1,975	74,811	374,055
Zinc	1,000	100	900	3,814	19,070
Copper	500	20	480	611	3,055
Cadmium	20	1	19	4,318	21,590

*Total amount of waste metals allowed on agricultural land for soils with CEC>15 meg/100g (54).

†Based on preliminary EPA estimate that approximately 5 times the agricultural soil metal accumulation would be the maximum acceptable loading for non-agricultural soils.

The calculation assumes that the concentrations of these metals (refer to Table VII-1) will remain constant over the life of the disposal site. As shown in Table VII-4, the maximum allowable mostos loadings vary considerably with respect to the individual metals, with copper being the limiting constitutent.

For land farming purposes, no recommended criteria are available. Conversations with EPA personnel indicate that loading rates as high as 5 times USDA criteria for agricultural soils may be acceptable for non-agricultural soils if the metals applied are demonstrated to be retained in the plow zone. If a landfarm site will not be utilized for agricultural purposes at any future time, the estimated maximum allowable waste loading in column 6 of Table VII-4 may be applicable. In this case, the heavy metal concentration of the waste is not a significant constraining factor in determining the annual application rate to the site if good soil management is practiced. Soil pH is of specific concern since mostos is particularly acidic (pH - 4.4). In order to minimize the potential for metal migration under acidic soil conditions, mostos may have to be neutralized to maintain a soil pH of 6.5 - 7.5. However, the accumulation of metals in the soil will limit the site life. The life span of the site with respect to each metal can be calculated as follows:

$$\text{Life (yr)} = \frac{\text{Maximum waste loading (T/ac)}}{\text{Annual application rate (T/ac/yr)}}$$

Table VII-5 presents these data. For mostos, the site life would be limited by copper accumulation, although a site life of

TABLE VII-5. ESTIMATED SITE LIFE BASED ON ANNUAL APPLICATION RATE OF 12 AC-IN/YR*

Element	Allowable Years of Disposal	
	Agricultural Site	Non-Agricultural Site
Lead	625	3,125
Zinc	32	160
Copper	5	25
Cadmium	36	180

*Mostos assumed to have a specific gravity of 1.06 with a total solids content of 8.35 percent. Annual application of mostos equivalent to 120 dry Tons/acre.

25 yr is not a significant constraint. Note that the calculation is based on the assumptions that the annual application rate remains the same (12 ac-in/yr at 8.35 percent total solids) and that there is no change in metal concentrations in the waste generated. An annual application rate of 12 ac-in/yr was selected because it represents an equivalent loading of 120 dry Tons/ac. For comparisons sake, a recently completed study of municipal sewage sludge agricultural utilization programs at 9 sites showed a range of annual sludge application rates of 15.3-146 dry Tons/ac. The median value was 50 dry Tons/ac (63).

The sodium adsorption ratio (SAR) is also an important consideration in the application of a liquid waste to soils. Calculation of SAR can be made by the following equation:

$$SAR = \frac{Na}{\sqrt{\frac{Ca + Mg}{2}}}$$

Wastewaters with SAR values greater than 15 should be avoided because of their detrimental effect on soil structure and ultimate reduction in the infiltration rate of the soils. Sodium adsorption ratio values from 5 to 15 can, over a period of years, lead to loss of structure in soil horizons containing more than 10 or 20 percent clay (loam or finer texture). Lower values are generally satisfactory, although long term declines in infiltration and percolation capacities have been observed in moderately fine-textured soils when irrigated with water having SAR ratios as low as 3 (54).

The SAR value calculated for mostos is 1.74, suggesting that long range application to soils will not result in degradation of its structure. Further, and of more practical significance, is that both Bacardi in Tultitlan, Mexico and Serralles in Mercedita, Puerto Rico, have practiced a "combined" form of agricultural utilization/land farming over a time frame considerably longer than calculations show to be feasible, yet neither has reported any deleterious effects to soils or crops.

Hydraulic Loading--

The ability of a soil to assimilate a specific quantity of waste is a function of many variables, including:

- Application rates
- Waste characteristics
- Soil type
- Location of water table
- Rainfall
- Evaporation.

Twelve (12) ac-in is a suggested annual application rate. The exact mostos application rate suitable to each location would have to be determined in a pilot test program. Application rates on St. Croix, for example, may be several times greater than in Puerto Rico because of the lower precipitation and higher evaporation rates. Mostos could be applied on a regular basis (1 ac-in/mo) or an equivalent schedule to cope with weather patterns. Additionally, storage facilities would have to be constructed for retention during periods of inclement weather.

The soils of the coastal plains in and around San Juan and Arecibo range from poorly to well-drained. In some areas, perched ground waters may reach the surface during the wettest portions of the year. On slightly higher ground, improved drainage characteristics would be expected. Evaporation exceeds rainfall throughout these coastal areas by about 22 in.

St. Croix, on the other hand, is semi-arid and has suffered under drought conditions for the past few years. The soils surrounding the VIRIL plant are mainly composed of the Diamond series (soil which is nearly level to moderately sloping, well drained and shallow over semi-consolidated limestone). The subsoil is

about 15 percent limestone fragments. Hard limestone is at a depth of about 14 in. Evaporation exceeds rainfall by about 40 to 45 in (84).

The last four factors are site specific and while detailed examination of each is not within the scope of this preliminary study, certain general comments are applicable.

Land Requirements--

Table VII-6 presents the relationship between minimum land requirements and application rates for each of the three distilleries.

Land requirements are also directly affected by the solids content of mostos, i.e., as the solids content increases, the land requirement decreases. No attempt was made to correlate these, however, since the only practical method of increasing solids is by concentration through evaporation, implying a twofold treatment scheme.

In reality, the estimates shown in Table VII-6 must be increased somewhat to cover contingencies such as extended periods of soil saturation, equipment storage, access roads, protective runoff ditches, etc.... These considerations will be elaborated in the Conceptual Design section of this report.

Bacardi--From the data presented in Table 6 and expanded to account for the above mentioned factors, Bacardi would require 220 to 317 ac to implement a land farming program. The lower figure would correspond to an annual application rate of 18 ac-in; the higher acreage, to 12 ac-in.

TABLE VII-6. MINIMUM ESTIMATED LAND REQUIREMENTS FOR BACARDI, PUERTO RICO DISTILLERS AND VIRIL AS A FUNCTION OF APPLICATION RATES

Plant	Land Required for Annual Application Rates of*: 9 ac-in	12 ac-in	18 ac-in
	(acres)		
Bacardi	370	275	185
Puerto Rico Distillers	165	125	83
VIRIL	80	60	40

*Based on assumption that heavy metal content and volume produced remain constant.

Puerto Rico Distillers--Similarly, Puerto Rico Distillers would require 121 to 155 ac for the same application rate (12 ac-in/yr).

VIRIL--Land requirements for VIRIL are 62-80 ac.

CONCEPTUAL DESIGN OF A LAND FARMING PROGRAM

General

Land farming is a viable and economically feasible option for the disposal of many and varied waste forms. The following analysis presents a conceptual design of a landfarming program for each of the three distillers. Specific site information, operating data, economics, etc., are unknown. Therefore, certain engineering assumptions have been made and are documented throughout.

State agencies generally prefer land farming sites to have a maximum slope of five percent. The minimum desirable depth to

groundwater is typically considered to be 15 ft, although this criterion may be modified depending on the quality and uses of groundwater and the types of overlying soils. It is also preferred that the soils be deep - greater than 4 ft - and moderately permeable. Waste and site characteristics assumed for the conceptual design are summarized in Table VII-7. The developmental design is based on land farming of mostos.

To provide cost comparisons for differing quantities of mostos disposal, the conceptual design considers three annual disposal rates: 33,100 dry Tons (Bacardi); 14,700 dry Tons (Puerto Rico Distillers); and 7,350 dry Tons (VIRIL). While these figures are only estimates, the conceptual design and resultant costs clearly show the economies of scale for the three rates considered.

A sketch of the hypothetical land farming site is shown in Figure VII-1. The topography of the site is such that slopes range from one to three percent, with an average slope of approximately two percent. The site is part of an open drainage system, which is typical of most humid regions. As a result, the movement of sediments and soluble materials from the site to neighboring water courses is possible. However, the site can be modified to control runoff.

Soils at the hypothetical site are medium textured, such as silt loam, with a clay content ranging from 10 to 25 percent and varying with depth. The soils are moderately well drained and have an available moisture holding capacity of approximately 15

TABLE VII-7. BASIS FOR CONCEPTUAL DESIGN

Waste characteristics:

- Chemical and physical characteristics as shown in Table 1
- Annual generation rates as shown in Table 2.

Site characteristics:

- Slope from 1 to 3 percent, averaging 2 percent
- Silty loam soil at least 4 ft deep
- Soils are moderately well drained, with a moisture holding capacity of approximately 15 percent
- Average precipitation of approximately 60 in/yr in Puerto Rico, and 40 in/yr in St. Croix
- At least 15 ft to groundwater.

Application rate:

- 12 ac-in (120 dry tons/ac) per year.

Site monitoring:

- Six water samples taken quarterly
  - Two surface water samples
  - Four groundwater samples
- Two soil samples taken quarterly
  - One surface 0- to 12-in depth or within plow layer
  - One subsurface 12- to 24-in depth
- Ten water quality parameters measured in each sample.

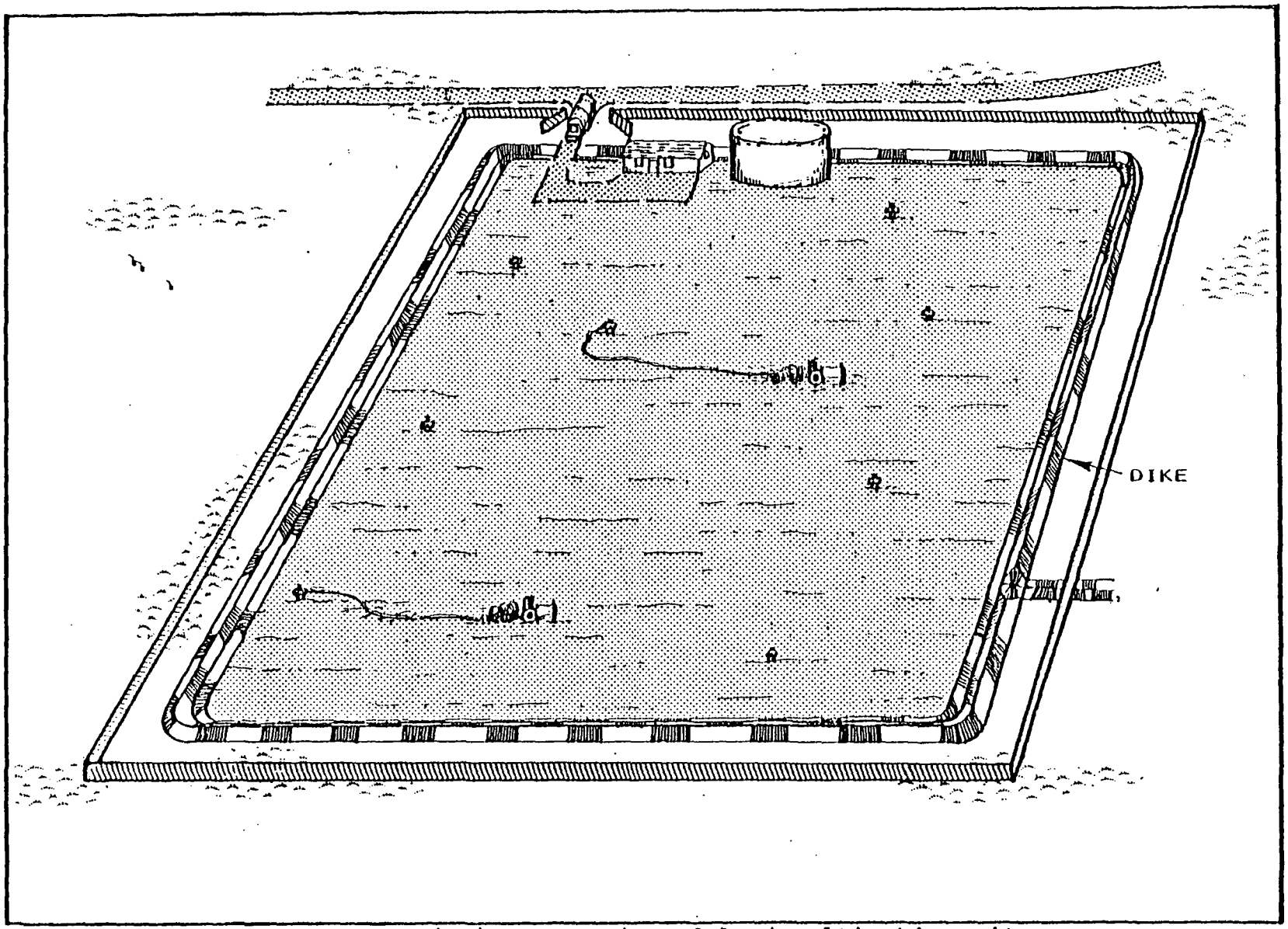

Figure VII-1. Artist's conception of land cultivation site.

percent. The site is assumed to have been cleared and used for pasture or low level agriculture for several years.

Land area required depends on the mostos application rate which normally must be determined on a case-by-case basis. The assumed mostos characteristics are such that an annual application rate of 120 dry Tons/ac is appropriate for a useful site life of 25 years. At this application rate, the productivity of the site for agricultural crops after 25 years of land farming may not be irreversibly impaired. It is preferable, however, that the site be used solely for disposal purposes; no crop is grown during or after completion of disposal operations to prevent introduction of toxic substances into the food chain. Further, from what has been presented earlier, the actual site life may be considerably larger than that calculated as evidenced by the Serrales and Bacardi, Mexico land disposal operations.

A surface and groundwater monitoring program is a necessary part of any land farming design. To adequately monitor surface water near or adjacent to a site, two samples should be taken at quarterly intervals. One sample point should be located upstream from the site and the other downstream.

The number of wells required to adequately monitor groundwater at each site depends on the complexity of the subsurface hydrology. For each hypothetical site, four wells are specified. Two wells are located at the upstream boundary of the site to establish background water quality. Two wells are located downstream from each site to establish the distribution and impact

of localized contamination (if any) on water quality in the aquifer. More wells would be desirable, but cost considerations will usually indicate that a plan be developed to ensure most effective coverage with the least number of wells.

The suggested soil monitoring program entails taking 10 soil samples each at the 0 to 12 in and 12 to 24 in depths prior to the first mostos application and at quarterly intervals thereafter. The samples at each depth are composited, processed, and anlyzed. Data obtained for the soils which have received mosto can be compared with the results for the controls (samples obtained prior to first mosto application). This comparison will indicate any accumulation and the extent of vertical migration of most constituents (e.g., heavy metals) beyond the plow layer. It is recommended that the following parameters be monitored:

- Total dissolved solids (TDS) or soluble salts (EC)
- TOC
- pH
- Sulfates
- Chlorides
- Nitrate-nitrogen
- Iron
- Copper
- Potassium
- Cadmium

Other parameters of concern such as selenium, boron, and toxic organics should be included in the water and soil monitor-

ing programs if these constituents are present in significant concentrations in the incoming mostos.

All analytical determinations can be performed by a contract laboratory.

Quarterly water sampling should be adequate for monitoring site performance. Such a sampling frequency has been typically employed by numerous land farming site operators and state regulatory agencies.

Site Design

For the purposes of the following discussion, it is assumed that the site selection process has been completed. Since each site's topography is gently sloping and relatively flat, substantial grading is not required to facilitate land farming operations. The site has been used previously for pasture or low level agriculture, so substantial clearing is unnecessary. Uncontrolled sheet runoff from the site's surface during periods of intensive rainfall could result in contamination of adjacent surface waters. For this reason, construction of a system of berms and runoff collection ditches around the site perimeter prior to initiating land farming activities is specified. This surface drainage system will eliminate standing water in the cultivated area, thereby ensuring that aerobic processes necessary for mosto decomposition are maintained.

Appropriate liming of the soil or neutralization of mosto may be necessary to maintain a soil pH between 6.5 and 7.5. Additionally, application of nitrogen fertilizer may be needed if the waste is highly carbonaceous (carbon to nitrogen ratio <30) to

enhance decomposition. These parameters will have to be investigated further in a pilot plant program.

An access control fence is placed outside the disposal area's ditch/berm and within 100 ft of the site perimeter. A 30 ft gate is located where the access road enters the site.

The site includes a paved access road to an office/equipment storage building. The building is prefabricated aluminum on a cement slab, with plumbing and utility connections. A 10 x 20 ft office extension area is furnished for the attendant and includes restroom facilities. The remainder of this structure houses the cultivation equipment and is closed to the weather on three sides.

Mostos Application Procedures

Selection of an application system depends upon several factors including facilities at the distillery, transportation costs, required flexibility, capacity and regulatory agency requirements. In most instances, regulatory agencies require that wastes be covered or mixed with soil soon after application to prevent aesthetic problems and contamination of runoff waters.

Subsurface injection has proven successful in many situations. These systems are normally used with liquids in the range of 1 to 10 percent solids. Although subsurface injectors particularly the continuously operating types, can apply liquid wastes at relatively high rates, factors such as transportation methods, costs and storage facilities for inclement weather require serious consideration.

Selection of a truck- or tractor-mounted injector unit depends, to a large extent, upon the goals established for the land farming

program, continuity of and access to the application site, and the quantity of waste that must be applied in a given time period. A truck-mounted unit offers the primary advantage of increased flexibility. That is, since waste is supplied from a mobile tank, the unit is essentially self-contained. It can be used both to transport and apply waste and can easily be used to service several sites. Typical productivity of truck-mounted units ranges from 30,000 to 80,000 gal/day and approximately 1,000 gal/acre per pass.

Primary advantages of the tractor-mounted unit are high productivity (200,000 to 300,00 gal/day) and high application rates (25,000 to 50,000 gal/acre per pass). Track-type tractors can operate in more adverse weather and/or soil conditions than wheel tractors or truck-mounted units. Tractor-mounted units, however, require more sophisticated controls and waste handling facilities to achieve maximum operating efficiency. Waste is supplied to the tractor-mounted injector through a long flexible hose, and a fixed liquid distribution system may also be required on the site.

Subsurface injectors normally use agricultural tillage tools (chisels or sweeps) to open cavities in the soil, allow liquid waste to flow into the cavities, and then cause the soil to bridge or cover the openings. Sweeps generally provide better covering at shallower injection depths and provide better mixing of the waste and soil. Good mixing of the waste and soil at shallow depths enhances evaporative drying, accelerates assimilation of the waste into the soil environment and practically eliminates odors, insects, and runoff problems. Further, in visual appear-

ance, the operation seems to be a normal agricultural practice. Careful landscaping or screening of storage and other handling facilities aids in eliminating the appearance of anything aesthetically offensive.

The following detailed analysis presents two scenarios: the first utilizes a tractor-type application vehicle fed from on site (land farm) holding tanks. Mosto is transported to the site via tanker trucks. The second utilizes the same application vehicle but on site mostos is supplied via a buried pipeline.

Via Tanker Truck--

Mostos is transported between the distillery and land farming site via 6,000 gal tanker trucks. A 10-day storage tank is provided at each distillery to provide a buffer during periods of inclement weather. A further 2-day capacity storage tank is provided at each land disposal site to supply the application vehicles. Application of mostos (assumed total solids of 8.35 percent) is accomplished using a subsurface injector mounted on a crawler tractor, the discharge from which is rated at 800 gpm. Application units are fed from the storage tank through a distribution system consisting of 10-in buried cast iron pipe terminating in a hose connect. The hose is heavy-duty flex type, typically 600-700 ft in length and 4-in diameter

Table VII-8 shows the cultivation areas, quantities of mosto, and storage capabilities required for each of the three sites at the suggested 12 ac-in application rate. It is assumed that the increase in the areas shown (total) will be required for

the access road, perimeter berm, buildings, runoff control facilities, and a 100-ft buffer on all sides. Figure VII-2 presents a representative profile of the site, indicating several of the key features previously discussed.

Mostos is applied on a daily basis except in extended periods of heavy precipitation during which the soil will not support the weight of the crawler tractor. It is assumed that soil applications can be made an average of 210 days/year and that application will be restricted to a one shift/day operation.

TABLE VII-8. CONCEPTUAL DESIGN WASTE AND SITE PARAMETERS

Parameters	Bacardi	Puerto Rico Distillers	VIRIL
Estimated annual volume (gal)	90,000,000	40,000,000	20,000,000
Gallons per operating field day (assume 210 working days/yr)	428,000	190,000	95,000
Estimated annual total solids disposed (@ 8.35% solids) (Tons)	33,066	14,696	7,348
Land area required (acres) (12 ac-in/yr):			
• For mostos disposal	275	125	60
• Total (including area for access road, building, ditches, buffer zone, etc.)	317	155	80
Storage tank volume at distillery with 10-day storage capacity (million gal)	4.3	1.9	1.0
Storage tank volume at land farm site with two-day storage capacity (million gal)	0.86	0.38	0.19

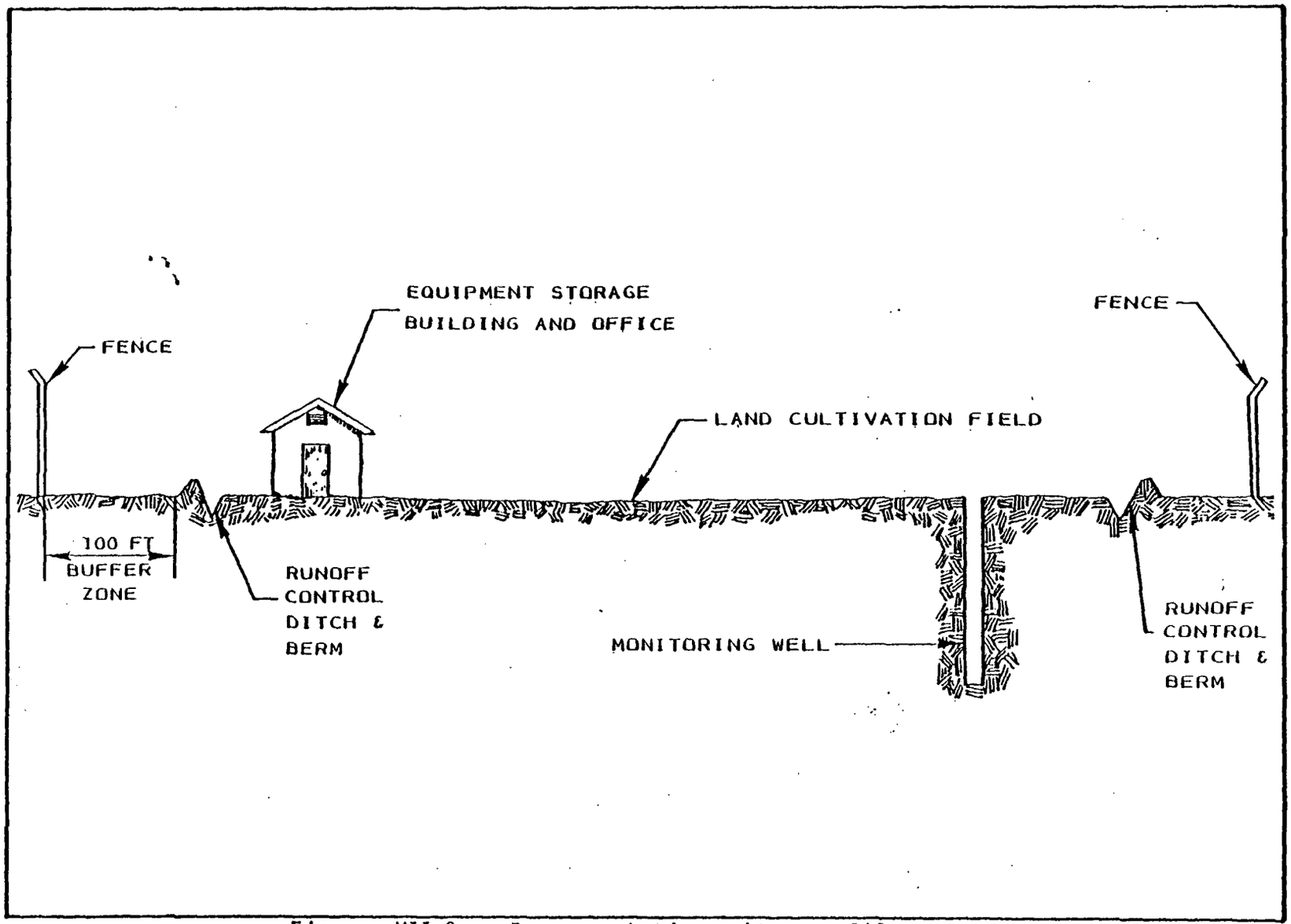

Figure VII-2. Representative site profile.

Truck transport of mostos in 6,000 gal tractors will operate on an extended (8 or more hours/day) schedule, approximately 210 days/year, (more for Bacardi) to maintain feedstock to the field. Times to load at the distillery, travel to the site, unload, and return are estimated to be (assuming site is five miles from distillery) 10, 15, 10, and 15 minutes, respectively. Further, it is estimated that this operation will be 70 percent efficient, therefore requiring a total cycle time per tanker of 71 minutes.

Based on the above (presented in Table VII-9). Bacardi will require nine tractor trucks, Puerto Rico Distillers four, and VIRIL, two. Each will require one additional cab for preventive maintenance and nonscheduled repairs. Similarly, at a rated capacity of 800 gpm, Bacardi will need two crawler-tractor application vehicles to handle their daily disposal volume; both Puerto Rico Distillers and VIRIL will require only one each. Labor requirements basically will follow the manning of equipment pieces as shown in Table VII-10.

TABLE VII-9. CONCEPTUAL DESIGN VEHICLE REQUIREMENTS FOR LAND FARMING UTILIZING TANKER TRUCKS FOR MOSTOS TRANSPORTATION

Factors	Bacardi	Puerto Rico Distillers	VIRIL
Gal/land farm operating day (gal)	428,000	190,000	95,000
Tanker loads/day land farm @ 6,000 gal per tank	72	32	16
Total cycle time for one tanker load @ 70% efficiency (min)	71	71	71
Number of tank trucks required per day assuming one shift - 10 hr/day	8.4	3.7	1.9
Actual number of tanker vehicles required:			
• Tankers	9	4	2
• Cabs	10	5	3
Number of tractor-crawler field applicators required at a capacity of 800 gal/min	2	1	1

TABLE VII-10. LABOR REQUIREMENTS FOR LAND FARMING UTILIZING TANKER TRUCKS FOR MOSTOS TRANSPORTATION

	Bacardi	Puerto Rico Distillers	VIRIL
Tanker Truck Drivers	9	4	2
Crawler-tractor Drivers	2	1	1
Full Time Mechanics	2	1	*
Foreman	1	-	-
Relief Personnel	1	-	-
Total	15	6	3

*Assume that employee assigned to crawler-tractor can substitute as a part-time mechanic.

Via Pipeline--

This scenario is similar in all respects to that presented in the previous section with the following exception: mostos is supplied to the land farm site via an 8 to 10 in diameter buried pipeline.

Mostos storage is assumed to remain the same - i.e., a ten-day capacity tank at the distillery and a two day capacity tank at the land farm site. Labor requirements, revised from Table VII-10 accordingly, are presented in Table VII-11.

TABLE VII-11. LABOR REQUIREMENTS FOR LAND FARMING UTILIZING A PIPELINE FOR MOSTOS TRANSPORTATION

	Bacardi	Puerto Rico Distillers	VIRIL
Crawler-tractor Drivers	2	1	1
Full Time Mechanics	3	2	1
Total	5	3	2

Estimated Costs for Conceptual Land Farming Site

Both capital and operating and maintenance costs are estimated.

Capital costs associated with land farming for both scenarios are presented in Tables VII-12 and VII-13. The recovery period ("useful life" or "payback" period) varies according to the type of investment. All capital costs have been annualized based on an 11 per-cent interest rate (on internal rate of return) over their

TABLE VII-12. CAPITAL COSTS FOR THREE CONCEPTUAL LAND FARMING SITES UTILIZING TANKER TRUCKS FOR MOSTOS TRANSPORTATION*

Cost Element†	Recovery Period (yr)	Bacardi		Puerto Rico Distillers		VIRIL	
		Total	Annual	Total	Annual	Total	Annual
Debt service for purchase of land @ 11% yr; based on original price of $15,000/ac		---	523,000 (317 ac)	---	255,800 (155 ac)	---	132,000 (80 ac)
Site preparation: Leveling, some clearing, surveying, design @ $300/ac	20	95,100	11,900	46,500	5,840	24,000	3,010
Site work: Fencing, buildings, roads, runoff prevention ditch @ $1,100/ac	20	349,000	43,800	171,000	21,400	88,000	11,000
Monitoring wells: 4 to 7 in wells, 60 ft deep, including pumps and casing @ $1,000/well	20	4,000	500	4,000	500	4,000	500
Storage tanks @ $.30/gal.							
• At the distillery	20	1,290,000	162,000	570,000	71,600	300,000	37,700
• At land farm		258,000	32,400	114,000	14,300	57,000	7,160

TABLE VII-12 (continued)

Cost Element	Recovery Period (yr)	Bacardi		Puerto Rico Distillers		VIRIL	
		Total	Annual	Total	Annual	Total	Annual
Field distribution system: From farm storage to field stations; includes pumps, risers, underground pipe @ $1,000/ac	10	317,000	53,800	155,000	26,300	80,000	13,600
Electrical equipment: Includes installation of power at site, transformers, controls @ $600/ac	20	190,200	23,900	93,000	11,700	48,000	6,030
Property tax and insurance @ 1.5% of in-place capital investments			35,200		16,605		8,650
Injection equipment: Includes crawler-tractor, hoses, reels, freight	10	240,000	40,000	120,000	20,400	120,000	20,400
Communication equipment	5	5,000	1,350	5,000	1,350	5,000	1,350
Subtotal		2,748,300	928,650	1,278,500	445,795	726,000	241,400

TABLE VII-12 (continued)

Cost Element	Recovery Period (yr)	Bacardi		Puerto Rico Distillers		VIRIL	
		Total	Annual	Total	Annual	Total	Annual
Tanker trucks @ $60,000/unit ($40,000-cab; $20,000-tanker)	10	580,000	98,500	280,000	47,500	180,000	30,600
Total Capital Investment		3,328,300		1,558,500		906,000	
Annual Capital Costs			1,027,150		423,295		272,000
Annual Capital Costs/Dry T			31.06		33.57		37.03
Annual Capital Costs/1,000 gal Mostos			11.41		12.33		13.60

*"Total" amounts are initial costs, "annual" amounts are for first 12 months of operation. All costs are in 1978 dollars.

†Annualized capital recovery (equal annual payments) at 11% interest rate.

TABLE VII-13. CAPITAL COSTS FOR THREE CONCEPTUAL LAND FARMING SITES UTILIZING A PIPELINE FOR MOSTOS TRANSPORTATION*

Cost Element†	Recovery Period (yr)	Bacardi		Puerto Rico Distillers		VIRIL	
		Total	Annual	Total	Annual	Total	Annual
Subtotal from Table 12		$2,748,300	$ 928,650	$1,278,500	$445,795	$ 726,000	$241,400
Pipeline: 5 mi of 6" dia. pipe, including accessories @ $13/ft	20	343,200	43,100	343,200	43,100	343,200	43,100
Pump stations: 2/site @$150,000 ea	10	300,000	51,000	300,000	51,000	200,000	51,000
Debt service for right of way lease @ $15,000/ac (11% interest)	20		16,500		16,500		16,500
Property taxes and insurance @ 1.5% of in-place capital investments			9,650		9,650		9,650
Total capital investment		$3,391,500		$1,921,700		$1,369,200	
Annual capital costs			$1,048,900		$566,045		$361,650
Annual capital costs/ dry T			$ 31.72		$ 38.52		$ 49.23
Annual capital costs/ 1,000 gal mostos			$ 11.65		$ 14.15		$ 18.08

*"Total" amounts are initial costs, "annual" amounts are for first 12 mo of operation. All costs are in 1978 dollars.

†Annualized capital recovery (equal annual payments) at 11% interest rate.

recovery period. Major capital cost categories are land, site preparation and construction, and equipment.

The estimated unit cost for land is $15,000/ac. However, land is considered an appreciating asset and as such is not considered in the same light as other investments. Rather it is shown as an annual cost in the form of debt service.

Tables VII-14 and VII-15 respectively present annual capital and operating costs for both scenarios. From the data shown, lower total annual costs are shown for pipeline transport for Bacardi and Puerto Rico Distillers. From the scenarios presented, the less expensive option to VIRIL would appear to be tanker transport. This would change, however, if VIRIL would be able to utilize the adjacent land surrounding the plant (the scenario is for a disposal site five miles from the plant.

Table VII-16 presents a summary of Tables VII-12, VII-13, VII-14 and VII-15.

In considering the foregoing analysis, however, several qualitative factors should be included when comparing the scenarios. These are:

- Social and aesthetic cost are intangible but should be considered. For example, the logistics of Bacardi hauling 70 or more daily loads (6,000 gals each) of mostos on reasonably busy roads would suggest considerable traffic congestion, noise, and possible annoyance to roadside villagers.
- Further, no costs have been included for highway and road repairs. These are difficult, at best, to calculate, but

TABLE VII-14. ANNUAL OPERATION AND MAINTENANCE COSTS FOR THREE LAND FARMING SITES UTILIZING TANKER TRUCKS FOR MOSTOS TRANSPORTATION

Cost Element	Bacardi	Puerto Rico Distillers	VIRIL
Labor @ $10/hr, including fringe benefits	$ 312,000	$ 124,800	$ 62,400
Operation and maintenance of vehicles @ 20% of capital costs; includes fuel and replacement parts	164,000	80,000	60,000
Monitoring (32 samples x 10 parameters ea @ $20/parameter plus other testing)	10,000	10,000	10,000
Annual operating costs	486,000	214,800	132,400
Annual capital costs	1,027,150	493,295	272,000
Subtotal	1,513,150	708,095	404,400
Administrative costs @ 15%	226,970	106,214	60,660
Total annual costs	1,740,120	814,309	465,060
Annual costs/dry T	52.63	55.41	63.31
Annual costs/1,000 gal mostos	19.33	20.36	23.25

TABLE VII-15. ANNUAL OPERATION AND MAINTENANCE COSTS FOR THREE LAND FARMING SITES UTILIZING A PIPELINE FOR MOSTOS TRANSPORTATION

Cost Element	Bacardi	Puerto Rico Distillers	VIRIL
Labor @ $10/hr, including fringe benefits	$ 104,000	$ 62,400	$ 41,600
Maintenance:			
• of pipeline @ 2% of capital investment	6,860	6,860	6,860
• of pump stations @ 2½% each of capital investment	7,500	7,500	7,500
Operation and maintenance:			
• of crawler-tractor vehicles @ 20% of capital investment, including exchange parts and fuel	40,000	20,000	20,000
Power and supplies for operation of pump stations @ $15,000/yr	15,000	15,000	15,000
Monitoring (see Table 14)	10,000	10,000	10,000
Annual operating costs	183,360	121,760	100,960
Annual capital costs	1,048,900	566,045	361,650
Subtotal	1,232,260	687,805	462,610
Administrative costs @ 15%	184,839	103,170	69,392
Total annual costs	$1,417,099	$790,975	$532,002
Annual cost/dry T	$ 42.86	$ 53.82	$ 72.42
Annual cost/1,000 gal mostos	$ 15.75	$ 19.77	$ 26.60

TABLE VII-16. SUMMARY OF ANNUAL CAPITAL AND OPERATING TOTAL COSTS FOR TANKER TRUCK VS. PIPELINE MOSTOS TRANSPORTATION

Cost Element	Bacardi	Puerto Rico Distillers	VIRIL
Tanker truck transportation:			
Annual capital costs/dry T	$31.06	$33.57	$37.03
Annual capital costs/1,000 gal mostos	11.41	12.33	13.60
Annual operating costs/dry T	52.63	55.41	63.31
Annual operating costs/1,000 gal mostos	19.33	20.36	23.25
Pipeline transportation:			
Annual capital costs/dry T	31.72	38.52	49.23
Annual capital costs/1,000 gal mostos	11.65	14.15	18.08
Annual operating costs/dry T	42.86	53.82	72.42
Annual operating costs/1,000 gal mostos	15.75	19.77	26.60

could become significant, especially so for roads designed for normal passenger car traffic - not fully loaded tanker trucks.

- Annual capital costs for both scenarios can be significantly reduced if the cost of land is less than shown. Additionally, long-term leases may be negotiated at a fee much less than that used for debt service.
- No costs are presented for appreciation of land values. If purchased, this land would be expected to increase in value, thus increasing the net worth of the respective purchasing companies.
- All estimated costs for the conceptual designs are based on 1978 dollars. It is to be expected that those costs will rise in the future due to inflation, but no cost projections were made because of uncertainty in the inflation rate.

The annual operating costs of mostos pipeline transport (Table VII-15) are 14 percent of the total annual costs. The same values for tanker truck transport show the annual operating costs to be 47 percent (Table VII-14). The comparison is significant since those operating dollars needed for annual support of a tanker truck fleet would be expected to increase with inflation. Total operating costs for pipeline transport are similarly subject to inflation, but would be expected to increase less in overall total dollars since they represent a smaller overall percentage of the total annual costs. The relative cost of pipeline transport, therefore, would be expected to become more economically

favorable in the ensuing years, assuming that the inflation rate continues to increase.

As expected, the total unit costs shown indicate that larger land farming sites are less costly to operate on a unit cost basis than are smaller sites. For comparisons the range of unit costs on a dry weight basis for either scenario are within the range of municipal sewage sludge disposal costs typically reported.

Finally, Table VII-17 presents the effect of each scenario in terms of annual proof gallon production (1977 figures). It was assumed that production figures were 17.4, 5.2, and 3.4 million proof gallons respectively for Bacardi, Puerto Rico Distillers, and VIRIL.

TABLE VII-17. ANNUAL LAND FARMING COSTS OF MOSTOS AS A FUNCTION OF RUM PRODUCTION

	Bacardi	Puerto Rico Distillers	VIRIL
		$/proof gallon	
Scenario A - Transport via Tanker Truck	0.1000	0.1566	0.1368
Scenario B - Transport via pipeline	0.0814	0.1522	0.1565

IDENTIFICATION OF RESEARCH NEEDS

The preceeding sections have outlined the basic fundamentals of a land disposal program and have carried these through in the form of a conceptual land farm design. Throughout the discussions, certain key parameters were identified, which, if quantified, would facilitate a more detailed and precise feasibility evaluation. A pilot study would, therefore, seem a logical first step to obtain the required data. The following program describes the equipment, site preparation, mostos applications, and monitoring recommended to determine the acceptability of the landfarming practices described in the Conceptual Design section.

A prerequisite, however, to this entire program is a thorough exploration with local regulatory agencies for necessary permitting and acceptance of the concept.

Equipment Required

For the conduct of this small pilot program, it is recommended that the necessary equipment be rented, either with or without an operator. For best results, the same type of equipment which will be used for the full-scale land farm should be used for the pilot test program. This, however, is not practical in all cases, expecially so with reference to subsurface injection equipment. In lieu of not having these specialized pieces, it is recommended that conventional surface applications followed by disking be substituted. The results are generally comparable. It is anticipated that the following equipment will be required:

- Farm tank trailer (1,500 - 2,000 gal capacity) equipped with exit valve and bar or fan spreader
- Tractor
- Roto-tiller or disk (3-tier, 10 ft wide, 18 in diameter).

The program should be implemented on a small plot of land (10 to 15 ac) and should be allowed to run for 6 to 9 mo, or an equivalent time frame to cover the seasonal variations. The location of the site is preferably near either the Bacardi or Puerto Rico Distillers facility. It may be assumed with a certain degree of confidence that application rates and other parameters determined in Puerto Rico will be applicable to a similar operation on St. Croix. The opposite, however, may not be the case considering the current drought conditions of St. Croix.

The test and control plots should be constructed so that they are of equal size and are located on identical soils. A berm should be constructed around the perimeter of the test area and between the test plots to contain runoff and mosto applied within the fields.

Mostos Application

In the pilot program, mostos should be applied at rates equivalent to 6, 9, 12, 15, and 18 ac-in/yr to each of 5-two ac plots. A sixth 2-ac plot would serve as a control (no mostos would be added to this plot for the duration of the testing period). Applications can be made by filling the tank (known volume) with mostos, driving to the particular plot designated for the specific application rate, and subsequently discharging the load at a previously

calculated speed equivalent to the prescribed application rate. Depending on the weather, the mostos will be allowed to dry for a few days (or more if it rains), and then mixed with the surface soils to a depth of 6 to 8 in, with a roto-tiller or tractor-pulled disk. Disking should be accomplished after each application and may have to be increased if odor problems develop.

Mostos should not be applied when the soil is excessively wet, since the equipment may get stuck in the mud and odors may possibly develop from casual ponding.

To facilitate evaluation of the pilot test program, precise records need to be maintained on the time, quantity and percent solids at which each load of mostos is applied to the plots. In addition, cultivation records need to be kept.

Monitoring

Soil characteristics and hydrogeologic data for the site should be carefully investigated. Of particular concern are such factors as permeability, soil pH, and distance to groundwater. Major environmental concerns typically, however, are soil accumulations of heavy metals and the potential for surface water contamination.

In the test program, soil samples from 0 to 1 ft, 1 to 2 ft, and 2 to 3 ft depths should be collected prior to the first mostos application. Subsequent sampling should be conducted at three-month intervals. These samples are to be analyzed for heavy metals (e.g., Cd, Pb, Cd, Zn, etc.), organic matter, total Kjeldahl N, pH, nitrate-N, chlorides, and sulfates. If these constituents

show significant increases in concentration with waste application, the extent to which they build up in soil and potential for surface water contamination can be assessed.

Likewise, runoff from the plots should be collected periodically and analyzed for the above-mentioned constituents.

Odor problems, if any, are to be noted during daily inspection of the plot, particularly after spreading of the mostos and on wet days.

Of special concern is the effect of mostos on soil pH. As mentioned earlier, mosto is very acidic (pH = 4.4) and may require neutralization prior to application. Alternately, liming of the soils may be required.

VIII. EVAPORATION

Evaporation of mostos, when viewed as a treatment technology, must be examined as a function of two considerations:

- Available technology
- Disposal options for secondary products (concentrates and side waste streams).

The technology for evaporation of cane molasses stillage has been successfully demonstrated (57, 58, 59, 60). Typically, the end result of such treatment is the production of a secondary product known as condensed molasses solubles (CMS) with a solids content in excess of 50 percent.

European and United States distillers have demonstrated that CMS can be successfully marketed. Puerto Rico and the Virgin Islands, however, are islands with limited potential for domestic CMS consumption (see "Potential for CMS Use in Puerto Rico and the U.S. Virgin Islands" for a detailed discussion). An in-depth analysis of evaporation as a disposal option, therefore, will be directed toward discussions of both the technologies available to produce secondary products and the alternatives available to dispose of these (final) products.

EVAPORATION TECHNOLOGY

Much of the knowledge about the experiences of existing facilities was presented in testimony for the EPA adjudicatory

hearings in the matter of NPDES permits for Puerto Rico Distillers, Schenley, and VIRIL (15, 24, 34, 87 and 57-60). Similar experience has also been reported by Bacardi (4). This testimony is assumed to be accurate and reliable. Included in the testimony are some cost estimates which are typically subjective judgements of the party offering testimony. The reader should keep in mind that these estimates are provided for general information without substantiation. Additional technological input to the various processes employed has been supplied by equipment manufacturers.

Theory, Design, and Operation

Two basic evaporation principles have successfully been utilized by the distillery industry to treat liquid waste streams - multiple effect and mechanical recompression. Within each category, various evaporator types are available to handle evaporation duties with maximum efficiency and economy. The most common types currently in use by the distillers are either plate (falling or rising film) or tubular evaporators (falling film). The following section will briefly discuss each of the above and their interrelationships.

The principle of multi-effect (ME) operations allows several single evaporation units (known as effects) to be connected in series. This system involves the multiple reuse of the heat content of steam. By this method, the energy contained in a single pound of steam may be used to evaporate anywhere from two to eight pounds of water, depending on the number of effects and the auxiliary equipment employed. Steam from a boiler enters the heating

jacket in the first of a series of interconnected evaporators. This steam boils the mostos in the first evaporator and condenses in the heating jacket after it has transferred its heat content to the mostos. This condensate is returned to the boiler. The water vapor from the boiling mostos is piped to the heating jacket in the second evaporator, where it boils the mostos in that evaporator. This process is continued as many times as the number of effects in the system (3).

Mechanical vapor recompression (MVR) entails increasing the heat content of the water vapor from the evaporation process. The recompression is generally applied to the vapor from the first effect in the system, causing an increase in the heat content of the vapor and enabling it to evaporate more water per initial unit of heat input (3). Some manufacturers produce MVR evaporators only as single effect units (3).

Generally, the evaporators which would be considered for application to mostos are designed on the basis of either thin film or forced circulation principles (3, 28). Five basic evaporator designs employ the thin film principle (3):

- The falling film tubular evaporator
- The rising film tubular evaporator
- The falling film plate evaporator
- The free flow falling film evaporator.

Thin film systems are offered as single-or multiple-effect units, with or without MVR.

Forced circulation evaporators are designed for processing liquids which are susceptible to scaling or crystallizing (74,75). Two basic types are offered (3):

- The forced circulation tubular evaporator
- The forced circulation plate evaporator.

Forced circulation systems are offered as single-or multiple-effect units, and may be combined with film evaporator pre-concentrating effects. MVR can be considered with forced circulation systems, but economic considerations usually do not favor such a design (28).

The energy efficiency of an evaporation system can be increased through the use of additional effects and MVR, but only at the cost of increased capital outlays from the addition of such equipment. MVR is theoretically the most energy-efficient evaporation method (34). MVR provides its greatest energy cost savings in applications where the cost of electricity is low and the operating hours per year are relatively high.

Applicability to Mostos

Evaporation of molasses stillage is a common occurrence in Europe, but, with few exceptions, it is applied to beet instead of cane molasses stillage. Two exceptions are the Bols Distillery in the Netherlands and the Bacardi rum facility in Malaga, Spain. Bols has a four-effect evaporator of the falling film type with a separate finishing unit. This unit has been in use for four years. The Bacardi, Malaga, evaporator, designed by Vogelbusch, is a multiple-effect evaporator with forced circulation for final concentration. Multiple-effect evaporators are currently in use at

the Bols Distillery in Scheidam, the Netherlands; Florida Distillers, Lake Alfred, Florida; and Bacardi, Malaga, Spain. Prior to plant closure, Standard Brands in Peekskill, New York, also utilized multiple effect evaporation.

The Bols Distillery is not specifically a rum distillery, but it produces liqueurs from the distillation of cane molasses. The differences between liqueurs and rum result from processing and formulation stages after distillation. Therefore, the composition of the raw waste discharge from the Bols Distillery is similar to that from a rum distillation plant. The equipment at the distillery is made of type 316-L stainless steel to permit cleaning with both dilute hot nitric acid, as well as with dilute hot caustic soda. Normally, four to six hours of cleaning are required out of a 24-hour operating period to remove organic and inorganic scale deposits (59).

Although Bacardi's multiple-effect evaporator at Malaga, Spain, has been in actual operation for a limited period of time, it has successfully demonstrated the evaporation of rum slops (58). Many initial scaling and fouling problems, however, were encountered. During initial start-up, one of the stages was in a continuous down-phase for cleaning.

In the United States, evaporation has been applied to beet, citrus, and cane molasses wastes from yeast, pharmaceutical, and rum manufacturing facilities (58). Standard Brands Industries (SBI) successfully operated an evaporation system at its yeast producing facility in Peekskill, New York. The primary waste

stream from the facility consisted of the spent molasses slops remaining after the fermentation process in the production of yeasts. The raw material for the yeast production consisted of varying amounts of cane and beet molasses. Restrictions in the supply of beet molasses were such that SBI on occasion used only cane molasses as their raw material. Although SBI initially experienced difficulties with the evaporator when only cane molasses was used, they could evaporate cane molasses wastes by implementing some specific improvements to their system designed to reduce the scaling (58).

The Red Star Yeast Plant in Belle Chase, Louisiana, produces yeast from Brazilian cane molasses. Red Star evaporates the waste to CMS and the evaporator needs to be cleaned only once every two to three weeks (58).

Pfizer, a pharmaceutical manufacturer in Groton, Connecticut, operates a large and technologically sophisticated evaporative system for a beet molasses waste stream and only has to clean the evaporators once every two weeks using caustic soda and nitric acid (58).

Process Performance

The overall evaluation of evaporation technology is a function of several parameters, the more important of which are:

- Effect of process in reducing pollutants
- Operating efficiency of equipment
- Energy consumption.

Effect of Process in Reducing Pollutants--

According to the testimony of Erik Krabbe, Region II EPA staff consultant to the Facilities Technology Division (60), the rum producers are required by EPA to remove approximately 94 percent of their wasteload BOD_5. The Malaga, Spain, Bacardi rum plant is capable of 98.7 percent BOD_5 reduction (58). Some data from Florida Distillers in Lake Alfred, Florida, consisting of seven samples taken between May 17 and 19, 1976, showed a mean BOD_5 reduction of 96.2 percent (58). Unfortunately, the Bols Distillery does not measure BOD_5 removal.

Puerto Rico Distillers (15) has noted that the evaporation process performance at Bols and other distilleries is greatly affected by whether or not the yeast and the fermenter bottoms are removed from the mostos stream. At Bols they must be removed to prevent rapid clogging of the evaporator. Puerto Rico Distillers has also noted that these high BOD sidestreams cannot be discharged untreated to the ocean without violating the BOD_5 limits of their NPDES permit. Therefore, these yeasts and fermenter bottoms must either be discharged to a POTW (an option not available to any of the distillers - see Chapter V , "Disposal to a Public Owned Treatment Works (POTW)") or may require further treatment.

The production of CMS results in large quantities of evaporator condensate reportedly having a BOD value of 100 to 2,000 ppm (32). Supplemental biological treatment of this wastestream may, therefore, be required prior to discharge. Erik Krabbe,

however, has stated that biological treatment of the evaporator condensate is not needed to meet the effluent standards required by EPA (60).

Operational Efficiency of Equipment--

From a practical standpoint, the ability to successfully evaporate mostos depends upon the nature of the input waste, the desired output, and the operating conditions to achieve this output.

It is generally accepted that the evaporation of cane molasses stillage results in more severe scaling than either beet or citrus molasses. For example, the Standard Brands operation in Peekskill, New York, was basically designed to evaporate beet molasses. Their six-stage multiple plate evaporator, when pressed into duty on only cane molasses (a condition which occurred for a two-week period when beet molasses was not available), showed evidence of even more severe scaling and fouling than normal (88). Standard Brands, in more recent operations, has switched to falling-film tube type designs (88).

Similar experiences were reported by the Zuid Nederlandse Spiritusfabriek at Delfzil, Netherlands (ZNSF) (15). This plant normally uses beet molasses, but on several occasions - two months in 1974 and one week in 1977 - the plant had to exclusively use cane molasses. On the first occasion, six to eight hours of cleaning were required after running the evaporator for 24 hours. During 1977, they were able to operate 10 to 15 hours before cleaning, a sitation which more closely approximates the Bols cycle (15).

To alleviate the fouling problems, Standard Brands was forced to modify their equipment. Their original APV-designed evaporator was not able to concentrate beyond 40-percent solids without experiencing problems. To overcome the basic design limitations, they installed a two-stage falling-film tubular evaporator to achieve final concentration to 55 percent.

Regardless of evaporator type, however, certain cleaning procedures must be employed on a regular basis to alleviate the continual build-up or inorganic and organic deposits. Typically, both nitric acid and caustic soda are employed for removal of these deposits. In cases of more severe scaling, mechanical cleaning has to be employed.

Another factor affecting efficiency is the desired solids content of the final product. Whereas CMS derived from beet molasses may be taken to 65-70° Brix, CMS from cane stillage has been generally limited to 55-60° Brix. Above this level, fouling and scaling become more pronounced and viscosity increases to a point where the final product becomes difficult to handle.

Energy Consumption--

This was discussed in the section entitled "Theory, Design, and Operation."

Pilot Installation

Bacardi has built a pilot-scale evaporation system at its distillery in Catano, Puerto Rico, with an operating capacity of approximately 30,000 gal/day (87). Bacardi has said that if the

pilot tests are successful and a method can be found for disposal of CMS, they may build a full-scale system (34). The pilot tests involve experiments with:

- Construction materials
- Pretreatment alternatives
- Cleaning cycles
- Temperature and other parameter optimization
- Condensate treatment
- CMS marketing (34).

Bacardi's pilot-scale evaporator, a two-body, three-stage type, was designed by the Dedert Corporation. The first two stages are falling film; the final is forced recirculation. The system was designed to operate on the principle of mechanical vapor recompression (MVR). Bacardi believes that this will be the best-suited evaporator for treatment of its waste from the standpoints of cost and energy savings (34).

In Puerto Rico electrical power is six times more expensive than steam energy. Therefore, Bacardi has opted to use a steam turbine power generator to drive the MVR system rather than electricity (34).

It was calculated that the Bacardi pilot MVR unit would require about 2.2 KwH/1,000 lb water removed, while the Bacardi, Malaga, multiple-effect evaporator currently requires about 112 KwH/1,000 lb water removed (57).

Bacardi will be the first to evaluate its efficiency in a rum distillery for the treatment of cane molasses.

The construction of the pilot evaporation unit was completed in August 1977, but the contractors were unable at that time to furnish the turbine for the MVR. The unit was consequently run with steam until July 1978, at which time the MVR mode became operative.

During the break-in runs, there was some evidence that scale build-up was reduced, permitting longer operation periods between cleanings. In one of the early runs, for instance, the unit developed some encrustation after 120 hr of operation, and circulation with a caustic solution did a fair job of cleaning (87). It should be noted, however, that the long lengths of the initial runs were chosen to study the outer limits of operation and may not represent the most practical production-to-cleaning cycle. Furtheremore, the ash content of the molasses used was only 10 percent, whereas the average ash content of the molasses used by Bacardi is approximately 12 percent (87).

Certain mechanical problems were also experienced during several of the test runs, but these were corrected between the runs. It was suggested that molasses pretreatment might provide a waste that would be easier to evaporate, but as of October 1978 this step has yet to be implemented (87).

The evaluations of both the evaporator and the MVR unit are forthcoming from the Bacardi Corporation, but are not anticipated until sometime after December 1, 1978. Until such a report is issued, a detailed analysis of the units' performance is not possible.

CONDENSED MOLASSES SOLUBLES (CMS) UTILIZATION AS AN ANIMAL FEED SUPPLEMENT

The term "CMS" refers to a number of different products, all of which are made from the residue of a molasses fermentation process. Molasses fermentation is involved in the production of yeast, pharmaceuticals, citric acid, monosodium glutamate, alcohol (for both industrial and beverage use), and various other products. During the manufacture of these products, the fermentable sugars contained in the molasses are consumed by microorganisms, leaving a residue which could be described as sugarless molasses. This residue is converted into CMS by evaporation until a concentration of 55 to 60 percent solids is attained (35).

The composition of CMS varies greatly depending upon the type of molasses used and, to a lesser extent, the type of fermentation process and end product involved. The single most important determining factor in the composition of CMS is whether the input material is cane or beet molasses. In addition, there is considerable variation when cane molasses is used because cane molasses varies greatly in composition, depending upon the weather and soil conditions where the cane was cultivated, the method by which the cane is harvested, and the efficiency of the sugar-refining process, of which molasses is a by-product (35).

Beet-based CMS is much more desirable as a feed additive than cane-based CMS because the protein level is much higher than that of cane--approximately 18 percent for beet as opposed to 4 to 6 percent for cane (35).

Animal feed supplements are widely employed in the raising of cattle, sheep, poultry, and other domestic animals (40). These supplements extensively utilize by-product materials such as molasses, fat, and urea (40 ,100). CMS, derived from sugar cane, sugar beet or citrus, may be substituted for part of the molasses in some animal feed supplements (35). In this manner, not only the CMS is utilized, but limited supplies of more expensive molasses are extended (35).

CMS potentially could be employed in dry supplements and liquid supplements. There are technical difficulties however, in utilizing CMS in dry and block form supplements. Little CMS (as a molasses substitute) can be used in feed blocks because technical problems related to the consistency of molasses have severely limited its incorporation into solid blocks (40). Therefore, it appears that utilization in liquid and dry feed supplements offers the most favorable potential for marketing large quantities of CMS.

Liquid supplements are available which contain a large percentage of molasses for high energy content. The molasses content of a finished liquid supplement may be as high as 70 percent by weight (solids basis). The higher the molasses concentration, the greater the stability of the liquid supplement (40).

The trend in feed supplements has been away from dry supplements to liquid forms because the latter are based on low cost non-protein nitrogen sources such as urea instead of more costly natural proteins such as soybean. Fluid materials also have certain advantages in blending, handling, and transport operations (100).

Literature Review: Feed Acceptance and Nutritional Value

Feed Acceptance--

The results of some relatively recent animal feeding experiments are summarized below.

A progressively severe condition of black and watery excrement was noted in hens which consumed rations containing more than 10 percent mostos. The appetite, weight, and appearance of the birds remained healthy although, the watery excretions stained eggs, hens, and surroundings (29).

CMS levels of 0, 1, 2.5, 5, 7.5, and 10 percent were incorporated into broiler starter diets (27). The eight-week body weights of all birds receiving CMS were numerically superior to those of the controls, with those of the 7.5 percent treatment being the highest. Daily feed intake increased as the dietary level of CMS was increased. Feed conversion efficiency was significantly lower than the control for the 7.5 percent level of supplementation (27).

Diets containing increasingly higher levels of CMS were also fed to laying hens (27). Statistical evaluation revealed a significant egg production improvement associated with the feeding of 2.5 percent or more of CMS. Egg weights and Haugh unit scores (interior egg quality) were significantly reduced when 2.5 percent or more of CMS were fed. Specific gravity of eggs (shell quality) and mortality were not significantly related to diet. There was a trend toward increasing feed intake as CMS levels were increased. The investigator concluded, on the basis of

these data, that CMS appeared to be an acceptable and nutritious product for use in diets of broilers and laying hens when proper attention was given, during the diet formulation, to its overall nutrient content (27).

Under wire cage management practices, levels of cane molasses as high as 20 percent can be incorporated in a practical diet for laying hens (96). But the average poultryman in Puerto Rico has his flocks under floor management, where molasses levels over 15 percent can cause a problem with caked litter. Another factor which would limit the use of locally-produced cane molasses in commercial laying diets is its cost, when compared to that of corn or other suitable more nutritive substitutes (96). Since there is a similarity between cane molasses and CMS, this suggests an upper limit of 15 percent CMS incorporation into poultry diets.

Dried mostos (10 percent moisture) was tested as a feed ingredient (corn substitute) for laying hens (97). Above a level of 20 percent, a serious detrimental effect on egg production appeared. Average egg weight, hen weight, broken-open egg height, and shell thickness were not affected by dry mostos levels as high as 35 percent. This tended to disprove the theory that high levels of potassium, magnesium, and sulfates in the mostos could have toxic effects such as the inhibition of calcium metabolism. Most of the eggs produced by hens consuming levels of dry mostos above 15 percent were stained, and the animals themselves were soiled. The overall data indicated that in practical diets

for laying hens, the level of dry mostos should not exceed 15 percent (97).

The effects of feeding three percent dried molasses distillers solubles to steers in all-grain rations was examined in Australia (39).

Spray-dried mostos has been used in cattle nutrition as a supplement in block or liquid form under grazing conditions. Incorporation in the feed caused a decrease in animal live- and carcas-weight gain and an inferior feed conversion ratio (39).

Forty Angus and Angus X Hereford yearling steers were assigned to four treatment groups in a completely randomized design for an 84-day feeding trial (2). Condensed molasses solubles were substituted in a corn-soybean meal diet at 0, 5, 10, and 15 percent on a dry weight basis. The CMS were obtained from a cane-sugar molasses distillation operation. After 56 days, steers fed 15 percent CMS were changed to the control diet due to reduced weight gain and feed efficiency. CMS at 5 and 10 percent also decreased average daily gain and feed conversion efficiency; however, dry matter intake was not influenced by treatment. At 84 days, there were no differences in average daily gain or dry matter intake for steers fed 0, 5, and 10 percent solubles, but feed conversion efficiency was reduced.

CMS had no effect on carcass quality or yield. Chemical analysis of CMS samples revealed high levels of potassium (11.6 percent, dry matter basis). CMS were judged to be less valuable than corn as an ingredient for finishing cattle. They were

judged as useful when maintenance of animal weight or less than maximum gains were desired (2).

Nutritional Value--

The mean chemical composition of several cane CMS samples is presented in Table VIII-1. The inorganic ash fraction comprises approximately 30 percent of the dry matter of the CMS. Protein comprises approximately 9 percent. The potassium level is very high. An amino acid analysis of cane CMS is also presented in Table VIII-2. This data is based on the mean of only two samples but it compares well with data presented elsewhere (68) for "molasses ethyl alcohol fermentation solubles." Several of the amino acids are present in relatively high concentrations.

The quality of molasses stillage as a feed supplement is improved by desalting and replacing potassium with ammonium ion. (94, 102). There are several variations in the desalting technique but generally sulfuric acid and gypsum are added to concentrated stillage at room temperature. The potassium content is reduced by 70 percent and the ash content in dry matter by 40 to 45 percent. The content of nitrogen-containing substances is increased by 30 percent (65, 172).

Potential for CMS Use in Puerto Rico and the U.S. Virgin Islands

The preceeding section has presented data indicating that CMS can be successfully utilized when incorporated into animal feed rations at certain low percentages. This may be performed by local feed manufacturers (on the islands) or, alternately, CMS can be exported in bulk to one of several destinations -

TABLE VIII-1. MEAN CHEMICAL COMPOSITION OF CANE CMS*

Component	Concentration
Dry Matter (%)	52.56
Ash (%)	32.63
Crude Protein (%)	8.69
Ca (%)	2.06
P (%)	0.16
K (%)	11.59
Na (%)	0.84
Mg (%)	1.07
Fe (ppm)	1865
Mn (ppm)	71.7
Cu (ppm)	115.5
Zn (ppm	56.9

* Dry weight basis (2).

TABLE VIII-2. AMINO ACID ANALYSIS OF CANE CMS*

Amino Acid	Concentration (%)
Aspartic Acid	.791
Threonine	.125
Serine	.144
Glutamic Acid	.403
Glycine	.118
Alanine	.200
Valine	.159
Cystine (Cysteine)	.026
Methionine	.024
Isoleucine	.101
Leucine	.146
Tyrosine	.072
Phenylalanine	.086
Lysine	.089
Histidine	.046
Arginine	.069

* Dry weight basis (2).

United States, South America, etc. This discussion will only consider the potential for local consumption.

Approach--

The potential for local CMS consumption is a function of both the animal population and the amount of locally formulated feed supplements. According to Soldevila the only likely vehicle for incorporating CMS into the diets of local animals is in feed concentrate prepared and sold by local commercial feed mills (73). Therefore, estimates of the potential CMS market must be dependent upon the quantities of feeds manufactured. Since agriculture is virtually non-existent on any of the three U.S. Virgin Islands, this analysis will be confined only to Puerto Rico.

A degree of uncertainty exists relative to the maximum amount of CMS that can be tolerated by cattle, swine,and poultry. Many of the feeding studies cited in The Literature Review section of this chapter have been conducted with, in some cases, mostos (either dilute or spray dried) or with CMS. These tests are not readily translatable into acceptable maximum or minimum ration levels. For the purpose of estimating CMS consumption, therefore, several levels of incorporation were used - 5, 10, and 15 percent. Fifteen percent was chosen as the maximum allowable level for feed incorporation as suggested by Dr. Soldevila's testimony (73), in which he discussed homogeneity mixing problems with liquids used as supplements to dry feed. While Dr. Soldevila's remarks were directed toward molasses incorporation, it

is assumed that CMS would offer similar mixing problems. Dr. Soldevila reports that the feed mills in Puerto Rico are only incorporating five percent molasses into feed concentrate (73). Therefore, to assume a percentage of more than five percent CMS presupposes that the feed mills could change their mixing operations.

In 1975, a reported 423,057 T of animal feed were produced locally in Puerto Rico (73). Using this figure as a starting point, Table VIII-3 presents the estimated maximum annual amount of CMS which could be used at three differing levels of feed incorporation. Estimates were based, in part, in the following assumptions:

- All feed mills in Puerto Rico would incorporate CMS into their respective production
- The constituents contained in CMS are not harmful to the consuming animals up to the 15 percent maximum
- CMS is 60 percent solids, a percentage at which bacterial activity is known to be negligible (32), and was concentrated from mostos at 8.35 percent total solids.

As can be seen from Table VIII-3, roughly 50 percent of the total CMS produced could be consumed locally if utilized at the 15 percent level. This is a hypothetical maximum. In reality, the total amount of CMS consumable through feed incorporation would probably be closer to the 21,000 T shown at the 5 percent level. This allows for both marketing and diet problems, surely to be encountered when initially utilizing a waste by-product as a food supplement.

TABLE VIII-3. ESTIMATED MAXIMUM ANNUAL QUANTITIES OF CMS WHICH COULD BE INCORPORATED INTO PUERTO RICAN MIXED ANIMAL FEED*

Parameter	Incremental Subtotal	Total
	-----Tons-----	
Quantity of feed mixed in Puerto Rico		423,057
Quantity of CMS used at 5% supplement	21,153	
Quantity of CMS used at 10% supplement	42,306	
Quantity of CMS used at 15% supplement	63,459	
Total annual quantity of CMS (60% solids) produced by Bacardi, Puerto Rico Distillers, and VIRIL		114,813

* Based on 1975 feed figures (73)

USE OF CMS AS AN INTERMEDIATE PRODUCT

Introduction

The previous section discussed the use of CMS as an end products in itself - i.e., as a potential animal feed supplement. CMS, or a similar product with lower solids content, can also be utilized as an intermediate product, from which certain by products can be recovered. Utilization of CMS as a intermediate product in the following processes will be discussed.

- Incineration - Control Parameters
- Incineration - Equipment Options
- Costs of Evaporation/Incineration
- Potassium Recovery
- Organic Fertilizer Production

Control Parameters for Incineration

Incineration of mostos may be accomplished either directly in the waste stream or after some degree of concentration. The advantage of concentration is anticipated cost savings, on both total equipment investment and operating costs. Engineers and manufacturers of incinerating equipment have been quoted as saying that it would be several times more expensive to incinerate slops directly than to pre-concentrate and then incinerate (15). Therefore, any cost-effective incineration plan is likely to include an evaporation step.

Important control parameters which should be considered are the incinerator feed solids concentration, the temperature in

the reactor, and the excess air supply. Calculations performed on an analysis for a typical mostos stream indicate that autogenous combustion (combustion without the need for a continuous supply of auxiliary fuel) can take place with a feed total solids (TS) concentration as low as 35 percent (61). An analysis was not performed to determine whether auxiliary fuel was needed to initially bring the incinerator up to its normal operating temperature, or whether the CMS could serve as start-up fuel.

A TS concentration significantly above 35 percent is desirable to increase heat recovery in a waste heat boiler (61) and to decrease the size of the incinerator. A CMS concentration of about 50 percent TS seems optimum since at higher concentrations technical problems with evaporation conditions and pumping characteristics of the CMS arise (61). A further disadvantage of having a higher concentration is due to the fact that the incinerator temperature must be maintained below 700°C in order to prevent ash fusion. Pilot plant work (10) showed that with a 75 percent TS feed, maintaining the incinerator temperature below 700°C resulted in the need for higher excess air conditions. In order to supply a large amount of excess air, a larger sized reactor is required than would otherwise be necessary.

The need for maintaining the incinerator temperature below 700°C is due to the low melting point of the inorganic salts contained in the waste. In general, the need to strictly control the temperature causes difficulty in attaining the correct

balance of operating conditions for a suitable combustion temperature with a complete combustion of volatiles (61). The difficulty of stabilizing the operating conditions is accentuated by variations in the organic and inorganic composition of the waste.

The variability in the waste composition is related to the variations in the molasses raw material. Molasses is a by-product of the sugar industry and is affected by variations in the original sugar cane source, in the sugar processing, and in the sugar mill efficiency. Its characteristics, accordingly, vary widely and cannot be completely predetermined or controlled by the rum producers. Bacardi Corporation, especially, because of its large volume of product, must rely on many molasses sources.

Several variations in types of incineration systems are available, as each manufacturer tends to have their own innovations. Few of these have been applied specifically to rum wastes. However, wastes produced in the paper manufacturing industry which are somewhat similar to rum slops, but containing sodium rather than potassium salts, have been concentrated and fully oxidized in a conventionally operated fluidized bed incinerator (61). In 1915 rum slops were concentrated and incinerated in the Porion Furnace and a system was later developed by Whitaker (117) and U.S. Industrial Chemicals, Inc. (4a, 43). During the early 1940's Reich (83) carried out experiments in low temperature carbonization retorts at 343°C for the production of carbon and potash. Further work was carried out in the distillery

of the Dyer Meaking Breweries Ltd., in Lucknow, India, in 1960 with a pilot-scale multiple hearth-type incinerator (10).

Kujala, et al. (61) have described an alternative to a conventional fluidized bed incinerator, consisting of using the fluidized bed reactor as a gasifier and performing the after burning in an after combustion chamber which is linked to a waste heat boiler. Apparently, the advantage of this type of system over a conventional single reactor system is that it alleviates the difficulty of maintaining the proper balance of operating conditions for a suitable combustion temperature while obtaining a complete combustion of volatiles. In the alternative fluidized system, the temperature in the gasifier is regulated below the melting point of the ash, but is sufficient for the volatilization of organic materials. Gases and volatilized organics are separated from ash and are fully oxidized in the after combustion chamber at a temperature which need not be below the ash fusion point. Several incineration systems are manufactured which utilize this same principle, having a primary and secondary combustion chamber. Most of these however, are not of the fluidized bed type, and therefore, do not require a cyclone separator for ash separation. By providing near-complete combustion of gases and organics in the secondary chamber, they have the ability to minimize air pollution. In fact, some of them reduce pollutant emissions to the extent that the systems can be installed without scrubbers. Combustion systems based on this design are called controlled air incinerators.

Costs of Evaporation and Incineration

The costs of evaporation alone have been discussed previously under "Evaporation Technology." The same cost considerations apply here. In addition, in a combined evaporation and incineration system there is an interrelationship between heat recovery during incineration and fuel costs for evaporation. An attempt to determine the costs of an evaporation and incineration system depends to a great extent on the accuracy of information with regard to fuel consumption for both processes and on the potential for the recovery and use of heat energy in place of fuel. Accurate information on the net energy requirements for evaporation and incineration of rum slops is lacking.

George H. Dorion of Bacardi Corporation has evaluated project designs for two types of incineration systems (34). The first, the Copeland system, is a modified type of fluidized bed system. It involves pre-concentration of mostos to 34° Brix. During pilot tests with this method, auxiliary fuel was necessary to sustain incineration. It was possible to incinerate 48 gal of slops/gal of fuel during the best test run. The investment cost for this system was estimated at $1,075,000 for a unit processing 73,000 gal mostos/day. The operating cost/1,000 gal slops was estimated at $20.00.

A second system, the Prenco incineration system, was evaluated and pilot tested. Being a liquid incineration system, it required auxiliary fuel because of the low BTU/gal available from mostos. The investment cost was estimated at $476,000 for

a 33,600 gal mostos/day. The estimated operating cost/1,000 gal mostos was $24.40

Neither the Prenco nor the Copeland system designs were based on maximum waste heat recovery, and neither included costs for air pollution control or ash handling. Efficient waste heat recovery would be expected to lower the net costs of treatment, while air pollution control and ash handling requirements would raise them.

Puerto Rico Distillers has estimated costs for evaporation followed by a Brulé Incinerator (15) which include costs for ash handling and air pollution control, but again do not include the savings possible with efficient heat recovery. These costs are much higher on a per gallons basis than Bacardi's estimates for the Prenco and Copeland systems. This is suprising because the former system involved production of CMS (50° Brix), while the two latter systems did not. Puerto Rico Distillers has stated that manufacturers who quoted them incineration equipment costs agreed that it would be several times less expensive to incinerate CMS than the dilute slops (15). Yet the estimated capital expense of an evaporation and incineration system was $4,655,000 for a 223,200 gal mostos/day; and the operating cost was estimated at $47.00/1,000 gal slops. The corresponding breakdown of costs allocated $400,760/yr for fuel oil for incineration (of a total direct cost for incineration of $579,440). This fuel oil cost is based on 1.268 mil gal/yr at $0.32/gal. This allocation is extremely high, amounting to 5,283 gal fuel oil/day. In addition, $284,400 was allocated for fuel oil for

evaporation, or 3,750 gal/day. In total, 9,033 gal fuel/day were allocated for evaporation and incineration, equivalent to 25 gal slops treated/gal fuel. In contrast, the Copeland system described earlier indicated that it was possible to treat as much as 48 gal mostos/gal fuel. Puerto Rico Distiller's estimate should be at least as low as 48 gal slops/gal fuel; and in fact with the type of system proposed by Bacardi, fuel for incineration should be minimal except during start-up. While it is not possible to calculate the amount of fuel required, it is estimated that approximately 1,000 gal fuel would be a maximum requirement for incinerator start-up. Assuming that CMS is autogenous, auxiliary fuel consumption to sustain combustion should be minimal as compared to Puerto Rico Distillers' estimate of 5,283 gal/day.

Potassium Recovery from Incinerator Ash

Evaporation and subsequent incineration is expensive in terms of plant investment and operating costs. Therefore, it is essential to obtain a return on the capital expenditure if possible. The incinerator ash is itself a by-product which has a potential value as a fertilizer component; however, by means of further processing a more purified product may command a higher market price.

The incinerator ash is basically a crude potash containing potassium salts and impurities such as calcium and magnesium salts, silica, traces of iron and manganese, and unburned carbonaceous particles (61). Ash has been reported to contain 37 percent

potassium (expressed as K_2O) (59, 16). According to Kujala, et al. (6T) potassium salts generally should comprise 65 to 70 percent of the ash. Expressed as a percentage of the ash, the composition of salts is typically K_2SO_4, 56 percent; KCl, 7.0 percent; and K_2CO_3, 5.0 percent. Some investigators (37) have reported K_2CO_3 contents of as high as 50 to 60 percent, with only 15 percent K_2SO_4, and 10 percent KCl.

The use of incinerator ash as fertilizer component, in conjunction with nitrogen- and phosphorus-rich chemicals, is practiced at Izumi, Japan (24). A plant belonging to the Japanese Ministry of International Trade and Industry producing non-beverage alcohol incinerates some of its CMS. The ash is a fine slate gray powder which is crushed in a mill and then sold to a dealer. The dealer resells it as such or, more often, mixes it with other materials to make a fertilizer. The plant reportedly sells the ash for about $21/t and the dealer resells it for about twice that price, or still higher if it is converted to a fertilizer.

Work on the recovery of potassium salts has taken place in India (10, 61). A 90 gal/hr pilot plant consisting of evaporation, incineration, and potassium salt recovery was constructed at one of the Indian rum distilleries. Fresh slops were neutralized with lime to pH 7.0, filtered in a filter press, and fed to an evaporator through a heat exchanger. CMS at 75 percent dry solids was produced and fed to an incinerator where it was ashed. The ash was removed and leached with water for the

dissolution of all the potassium salts. The solution was filtered and neutralized with sulfuric acid to convert the carbonates to sulfates. The neutralized liquor was concentrated in an evaporator to 25 to 30 percent dry solids. Potassium salts were crystallized out from the concentrate in a screw trough crystallizer. A basket centrifuge followed for separating suspended crystals from magma. The crystals were then dried and bagged, while the magma was reused in the process. The finished product contained 83 percent potassium sulfate; 9 percent potassium chloride with traces of sodium salts; and 8 percent moisture. A flow diagram of the entire potassium salt recovery process is shown in Figure VIII-1.

Based on this research, it was estimated that a distillery producing 72,000 gal rum slops/day could recovery 3.85 ton/day of potassium salts (expressed as K_2O). At 1964 prices for potassic fertilizers, the cost of the treatment plant could be recovered in an estimated 5 to 6 yr from the sale of the by-product (10).

Kujala, et al. (61) state that the factory selling price for a refined potassium salt by-product could be on the order of $200/t within a few years. They report that there are indications that world resources of potassium salts, essential in N/P/K fertilizer formulations, are tending to reach a finite limit in availability, with anticipated future shortfalls in supply. Kujala, et al. (61) state that potassium for fertilizer needs is normally sold as KCl with a smaller market for

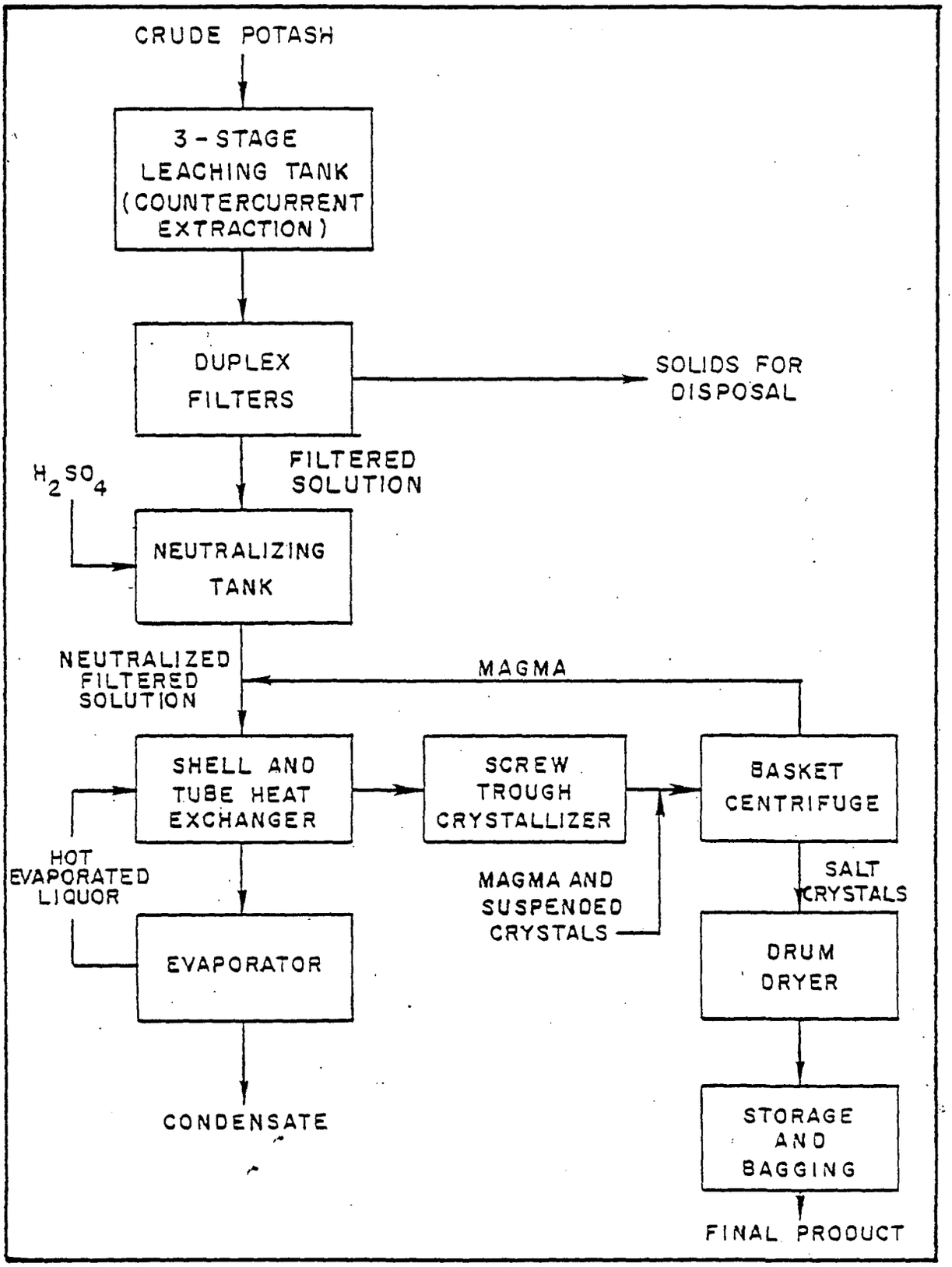

Figure VIII-1. Potassium Salt Recovery From Crude Potash.

K_2SO_4 (the major potassium salt recoverable from rum slops). With certain crops and in many tropical areas where soil salinity levels are high, the chloride ion is undesirable and sulfate of potash is preferred. Quite often, these areas are to be found where sugar cane is grown.

The market for potassium salts available to the Puerto Rican and Virgin Islands rum producers is uncertain. Table VIII-4 presents estimated potassium production figures based on the following assumptions:

- Incinerator ash is produced at the rate of 0.2 lb ash/gal of 8.35° Brix mostos
- Ash is 55 percent total potassium salts (37 percent expressed as K_2O).

Of the total estimated annual production of 15,000 T, 5,550 T (expressed as K_2O) would be available for potential use as a fertilizer source. To place this figure in proper prospective, the potential local market for potassium needs must be examined.

Table VIII-5 presents the annual average consumption of potassium chloride and other potassium salts by direct application (not mixed with other nutrients) in Puerto Rico over the period 1965 to 1975 (109).

TABLE VIII-4. ESTIMATED ANNUAL POTASSIUM PRODUCTION AS AN INCINERATION BY-PRODUCT

	Bacardi	Puerto Rico Distillers	VIRIL	Totals
Daily Generation of Mostos (gals/day)	300,000	200,000	100,000	600,000
Operating days/yr	300	200	200	--
Ash Production (T/yr)	9,000	4,000	2,000	15,000
Potassium Production (T/yr) (Expressed as K_2O)	3,330	1,480	740	5,550
Remaining Residue to be Disposed (T/yr)	5,670	2,520	1,260	9,450

TABLE VIII-5. PUERTO RICAN ANNUAL COMMERCIAL CONSUMPTION OF POTASH AND POTASSIUM COMPOUNDS IN DIRECT APPLICATION MATERIALS*

Potassium Product	Annual Average Consumption (Tons)†
Potassium Chloride, 50-62% Grade (expressed as KCl)	1,110
Other Forms	586
Total	1,696

* (109)

† Based on 1965 to 1975 consumption figures.

Assuming that the bulk of KCl is in the normal 60 percent grade, the 1,110 T would be equivalent to 802 T (expressed as K_2O). Similarly, if the "Other Forms" are predominately K_2SO_4, the 586 T could be translatable into 318 T expressed as K_2O. The estimated K_2O total of 1,120 T (802 +318) can then be compared to the hypothetical production total of 5,550 T (Table VIII-1). As can be seen, production would exceed current use by roughly five times. Assuming that local consumption would not increase, the difference would have to be exported at a presumed price disadvantage.

Organic Fertilizer Production from CMS

Molasses alcohol stillage contains considerable amounts of organic materials including amino acids, proteins, saccharides, gum materials, etc. Kyowa Hakko Kogya Co., Ltd., of Tokyo and

Hofu, Japan, has developed a process for creating an organic complex N-P-K fertilizer from stillage by converting the organic components to humic acid (24). The humic acid forms an organic complexing agent to which inorganic nutrients are coupled. This coupling controls the release of the nutrients for plant growth. Consequently, the damages caused by high concentrations of nutrients often seen in inorganic chemical fertilizers are minimized.

Kyowa Hakko Kogyo Co. obtains sugarcane molasses in Japan and from Indochina, the Philippines, and Taiwan. The cane molasses is converted into alcohol and is used in the production of pharmaceuticals and other products at Hofu, Japan (24). The company has performed experiments (44) which revealed significant damage to germinating plants when untreated cane molasses stillage was applied to the soil. However, if the stillage was treated with mineral acids, the damage was essentially eliminated. The damage was apparently caused by organic acids contained in the untreated stillage or by the acids formed in the soil from the sugar component of the stillage. By treating with mineral acids, the low molecular weight organic compounds were dehydrated, condensated, and converted to humic acid.

A procedure for producing fertilizer from stillage involving evaporation to CMS prior to subsequent treatment steps was developed. A pilot program using a plate-type triple effect evaporator with a capacity of 15 t/hr was conducted. Later, actual operation was set up at Hofu with the installation of 6 triple effect evaporators, each with a capacity of 33 t/hr (44).

With five of these evaporators, the Hofu plant has produced approximately 140,000 t/yr fertilizer (24). The evaporators produce CMS with approximately 50 percent total solids. In the fertilizer plant, sulfuric acid is added to adjust pH. The mixture is then heated to about 110°C for 8 to 10 hr as it is passed through a series of six - 300 gal reactors. Ammonia is added to achieve a pH of 4 to 5. Finally, phosphoric acid and potassium sulfate are added to adjust the composition of the final fertilizer. The resulting mixture has a soupy consistency. An agglomeration process then follows, resulting in a granulated but moist product. The granules are dried in a direct-fired (with heavy oil) rotary kiln which is about 6 ft in diameter and 70 ft long. Treatment of the exhaust gasses from the rotary kiln is required. The dried granules are cooled and put through a vibrating sifter to obtain the final product. A flow diagram for this process, is shown in Figure VIII-2.

The final product has the desirable characteristics of being homogeneous, granulated, and available in several grades. It has been commercially sold for $212 to $220/t in Japan. A U.S. selling price of $160/t was proposed (24). Kyowa Hakko Kogyo Co. advised that this type of fertilizer production was not a break even proposition unless annual quantities were in excess of 10,000 t/yr (24). They estimated that if VIRIL were to employ this process, their annual production of fertilizer would be approximately 7,000 t. Assuming that this estimate was based on a yearly production figure of approximately 3.4 million proof

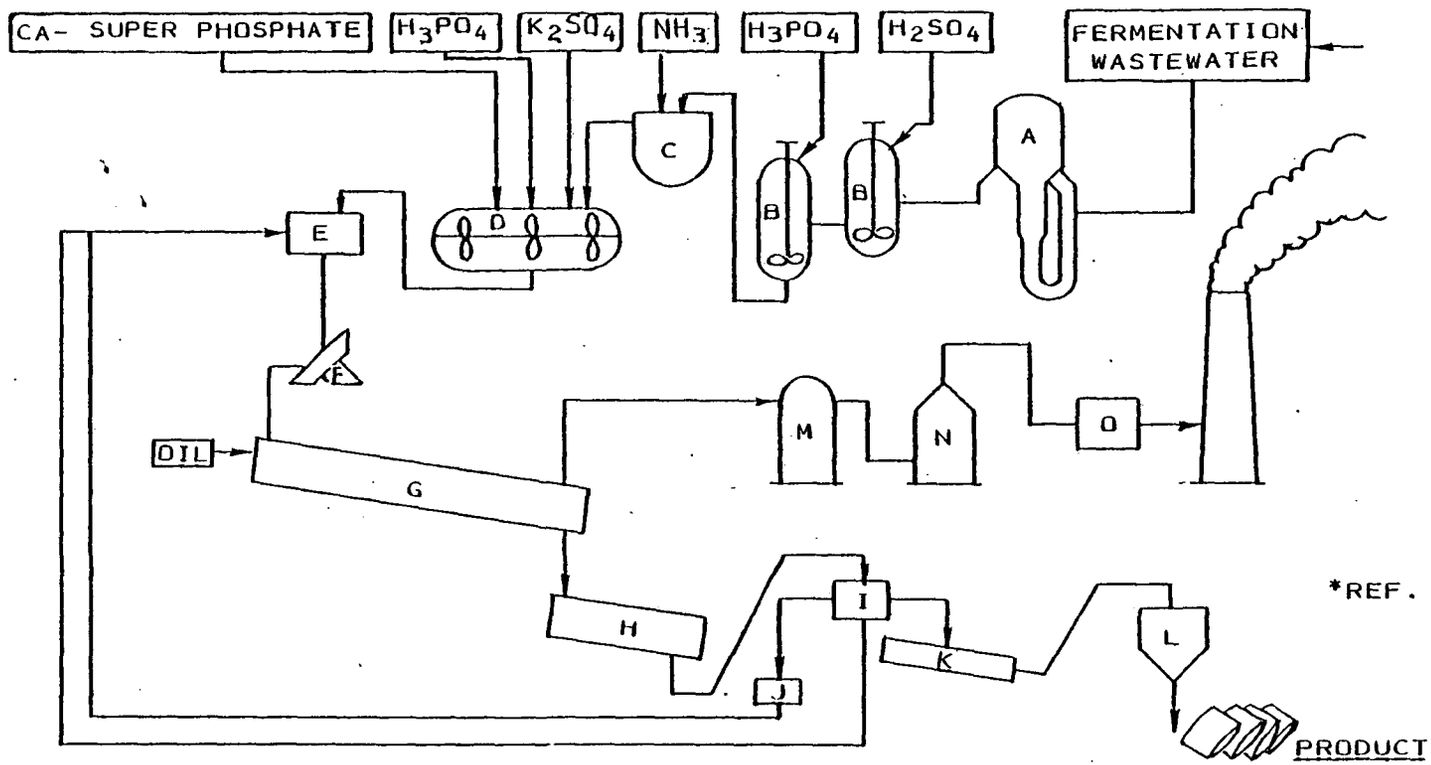

A = EVAPORATOR
B = GLASS LINED REACTOR
C = NEUTRALIZER
D = KNEADER
E = MIXER
F = GRANULATOR
G = ROTARY DRYER
H = FIRST ROTARY COOLER
I = SIFTER
J = CRUSHER
K = SECOND ROTARY COOLER
L = HOPPER
M = WASHING SPRAY TOWER
N = WET-TYPE COTTRELL DUST COLLECTOR
O = AFTER BURNER (INCINERATION)

Figure VIII-2. Process Flow Diagram for the Production of An Organic Compound Fertilizer*

gallons, organic fertilizer estimates for Bacardi (17.4 million proof gallons) and Puerto Rico Distillers (5.2 million proof gallons(would be 35,800 and 10,700 t, respectively.

IX. POLLUTANT REDUCTION THROUGH PROCESS MODIFICATIONS

There are several process modification options available to the rum distillers which, if implemented, would effect partial reductions of certain pollutants. Those of significant importance are:

- Pretreatment of molasses prior to fermentation
- Removal and recovery of yeast from fermenter beer
- Removal of fermenter bottoms
- Recovery of fusel oils and "heads" as a fuel supplement.

These are all options which the permittees have indicated that they could implement quickly, i.e., within 6 mo to 1 yr (80). Unfortunately, together, these methods are expected to give a maximum BOD_5 reduction of only 18 percent and TSS removals of slightly more than 65 percent (80). The BOD_5 reduction is so low because only the insoluble solids are affected by these methods, and approximately 80 percent of the waste BOD_5 is in soluble form (93). Nevertheless, these options may be considered as feasible because of the relative ease of implementation, the possibilities for recovery of valuable by-products, and the positive effects on subsequent mostos treatment options.

PRETREATMENT OF MOLASSES

Molasses pretreatment clarifies and pasteurizes the raw molasses, removing gums, sludges, salts, and unwanted microorganisms. These components tend to inhibit the yeast activity

and, if not removed, will become unfermentable solids in the bottoms of the fermentation tanks (61).

Molasses pretreatment may be achieved by diluting molasses to approximately 40^{0} Brix and raising the temperature close to the boiling point, when, due to the inverted solubility of the calcium salts, mainly calcium sulfate, maximum sedimentation occurs. Under these heated conditions, separation can be carried out in large settling tanks or by use of an ejecting-type molasses clarifier. After clarification, heat recovery is possible by exchange with the incoming, freshly-diluted 40^{0} Brix molasses (61).

Molasses pretreatment has important side benefits. Clarification and pasteurization of the molasses substrate yields a cleaner alcohol; consequently, the purifying column in the distillation unit requires fewer stoppages for descaling, and reduction in the build-up of sludges in the boiling column permits longer operating runs. Most importantly, from the standpoint of effluent treatment, the slops coming from the stills are cleaner and would be expected to cause less scaling of mechanical treatment equipment, e.g., evaporation units (61).

However, there is a large energy committment and capital expense involved in molasses pretreatment (80, 67). In addition, there is reportedly some loss of fermentable sugars (80). This is more of a problem as molasses becomes more expensive, there being a trade-off between benefits gained from pretreatment versus sugar losses (decreased rum yields).

A partial pretreatment of molasses can be effected simply by dilution and then centrifugation. Some distillers prefer this method, which does not involve heating, or forced sedimentation (67, 80). Without heating, however, neither pasteurization of the molasses nor precipitation of calcium salts is achieved. Figure IX-1 presents a typical molasses centrifugation operation.

YEAST RECOVERY

Yeast may be eliminated from the fermenter beer by centrifugation (Figure IX-2). The centrifuged yeast may then be recycled for further use in the fermenters, sold for an animal feedstuff (with or without drying), or land disposed.

The Bols Distillery in Scheidam, The Netherlands, practices yeast centrifugation and recycling (24). Yeast used in the fermentation is removed from the beer by a Westphalia centrifuge and is recycled. The separated yeast is acidulated with hydrochloric acid to a pH of 1.8 to 2.0 to prevent spoilage during storage. When needed again for fermentation, sodium hydroxide is added to produce a yeast cream of pH ~5, which reportedly has a total solids content of 10 percent and contains 45 percent protein and 3 percent P_2O_5. Urea and phosphorus are added as nutrients; fermentation is accomplished in about 12 hr. The yeast is continuously recycled for 3 to 4 mo, at which time it is discarded to the local sewer system (24).

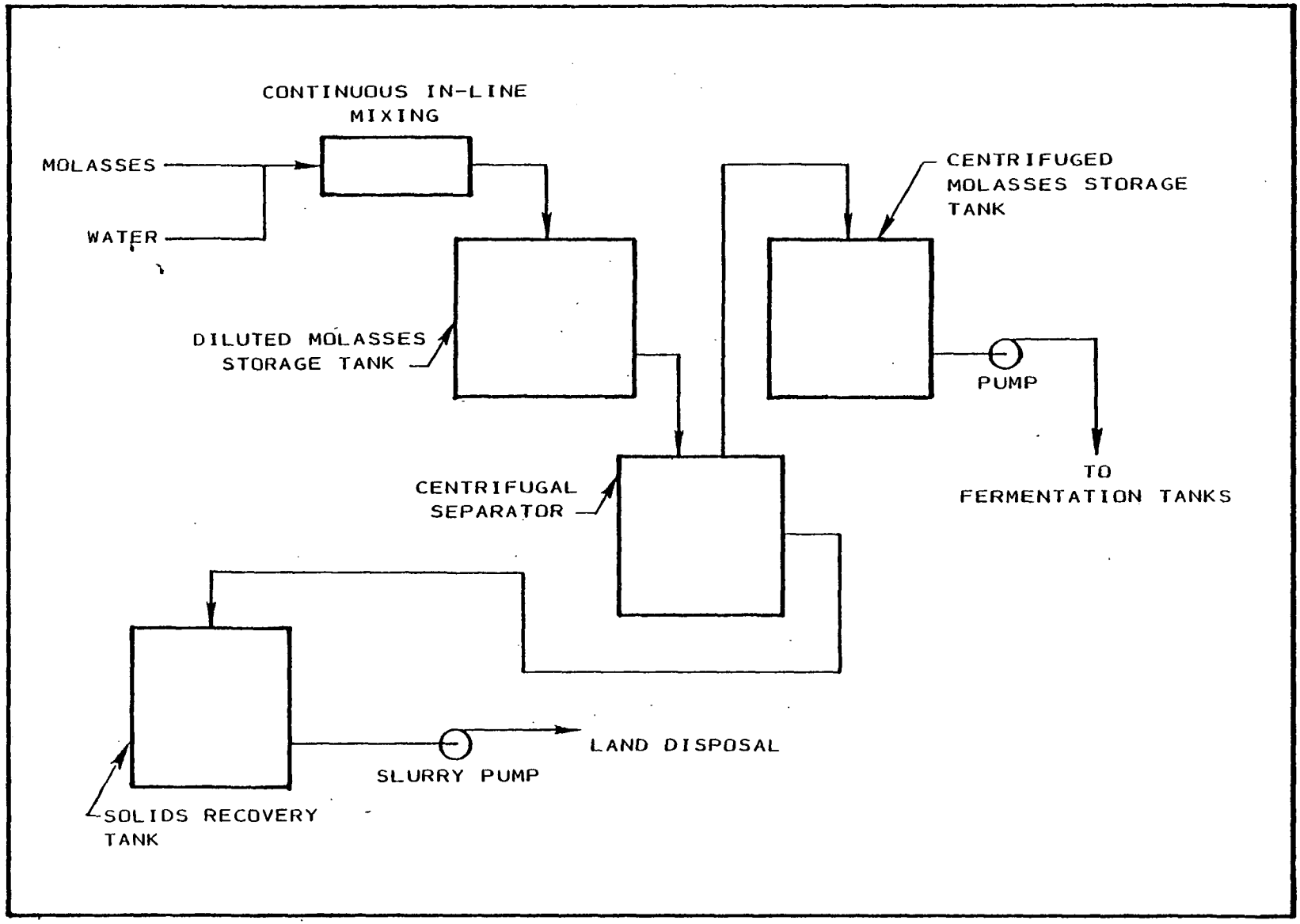

Figure IX-1. Molasses centrifugation (80).

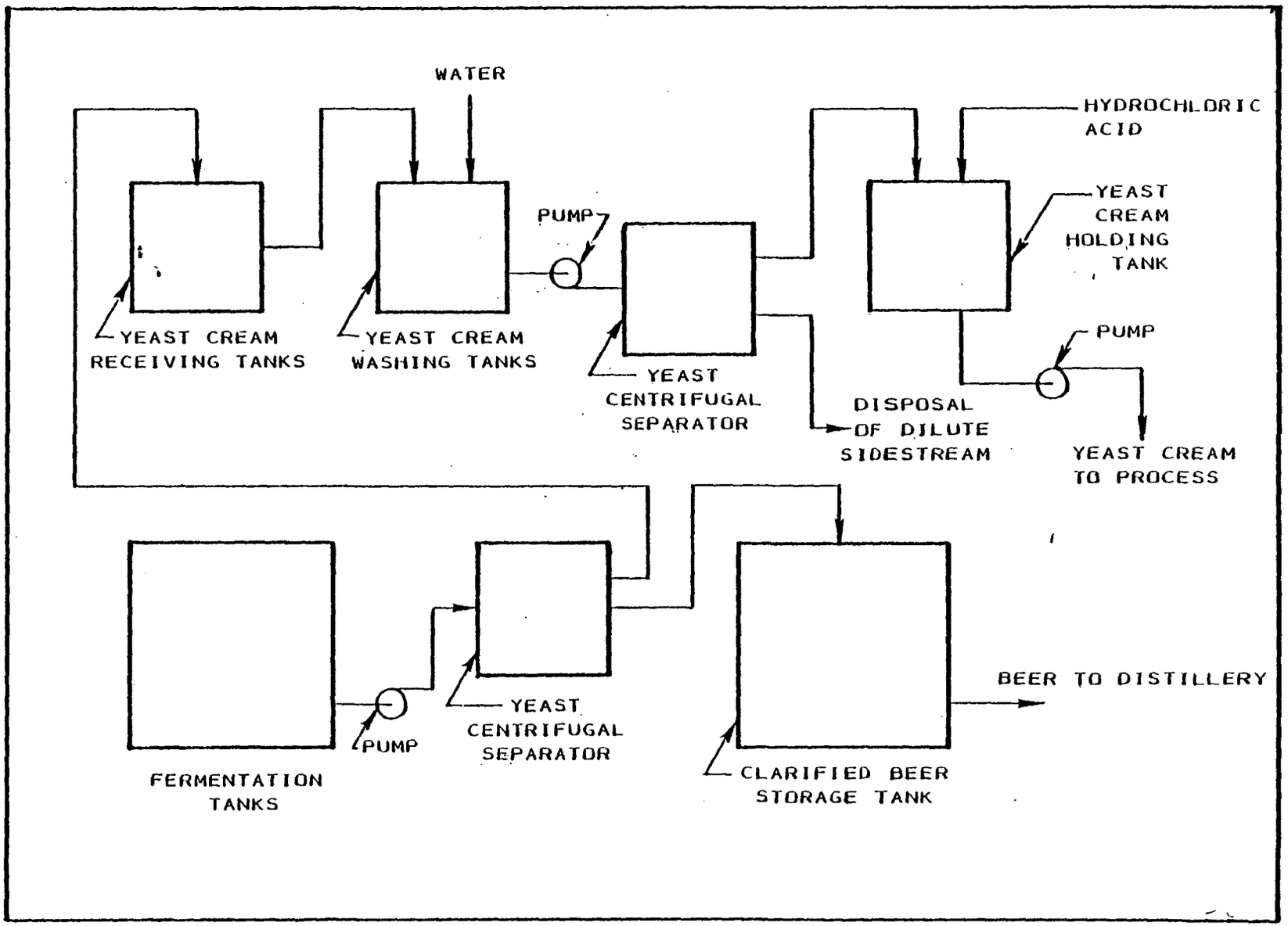

Figure IX-2. Yeast recycling by centrifugation of fermenter beer (80).

The advantages of yeast recycling are reported to include:

- Shorter fermentation times (61)
- Increased alcohol yield (61)
- Greatly diminished demand for new bakers' yeast
- Short technology implementation time (80)
- Less clogging of evaporation equipment used for treatment of mostos (24)
- Reduction of the amount of yeast requiring disposal to a small amount that is wasted (80)
- Suitability of the wasted yeast for land application or use as an animal feedstuff
- Availability of an alternative option for by-product recovery: sale of yeast as a high-protein animal feed supplement.

Possible disadvantages of yeast recycling include:

- Requirement for molasses pretreatment (61, 67)
- Unknown and perhaps undesirable effects of molasses pretreatment on alcohol yield and/or quality (67, 80)
- Production of higher temperatures in the fermenter, possibly necessitating installation of a fermenter chiller (80)
- Requirement of land disposal of molasses pretreatment residue and wasted yeast.

A particular version of yeast recycling is known as the Melle-Boinet technique. With this technique, fermentation times can be shortened to 14 hr, with up to a 5 percent increase in alcohol yield, according to Kujala, et al. (61); without yeast recycling, fermentation times can take 24 to 72 hr (36).

With this technique, a high yeast concentration is maintained in the fermenter and cell reproduction is almost eliminated, transforming sugars previously used for yeast growth into alcohol. Providing the yeast is handled properly and biological infections in the fermentation are controlled, it can be recycled up to 30 times before an appreciable loss in activity occurs (61).

Use of the Melle-Boinet technique in industrial spirits manufacture can only be made where molasses has first been pasteurized and pretreated to remove components which inhibit the yeast (61). Therefore, there is the risk that sugar losses will offset any gain in alcohol production from increased efficiency of sugar utilization.

REMOVAL OF FERMENTER BOTTOMS

Distilleries have the option of eliminating suspended inorganic and organic materials (other than the live yeast) which could become part of the rum slops in either of two ways: by molasses pretreatment, which has already been discussed, or by the removal of fermenter bottoms.

Fermenter bottoms are the unfermentable solids and dead yeast cells which settle to the bottom of a fermentation tank. The sludge is both inorganic and organic, being derived mainly from the impurities of the original molasses. Fermenter bottom sludge is minimized if molasses pretreatment is practiced; otherwise, several hundred gallons per fermentation tank of a high BOD sludge is formed (61). When fermentation ceases, the

liquid containing the live yeast cells is drained off for yeast recovery and/or distillation and the bottom sludge must be washed out of the tanks before they are reused for fermentation. A schematic flow diagram which shows how fermenter bottoms are removed is included as Figure IX-3.

It has been the practice at many distilleries to either run this material down a sewer or to dispose of it with the slops. An alternative is removal via a sludge pump to a holding tank and then land disposal (80). It is generally accepted that this material cannot be treated with the rum slops due to its effect on mechanical equipment, especially evaporation equipment (15, 24).

The advantages of removal of fermenter bottoms over molasses pretreatment are reported to be lower capital and operating (energy) costs and higher alcohol yields (80, 67). If yeast recycling is practiced, however, alcohol yields may, in fact, be higher with molasses pretreatment (61).

RECOVERY OF FUSEL OILS AND "HEADS"

The "heads" are the aldehydes and esters which are drawn off the top of the second distilling column, the aldehyde column. The fusel oils and amyl oils are separated in a third column, the rectifying column. To recover these streams as fuel, they are pumped from the distilling columns to a storage tank and then to a second burner installed in the plants' boiler.

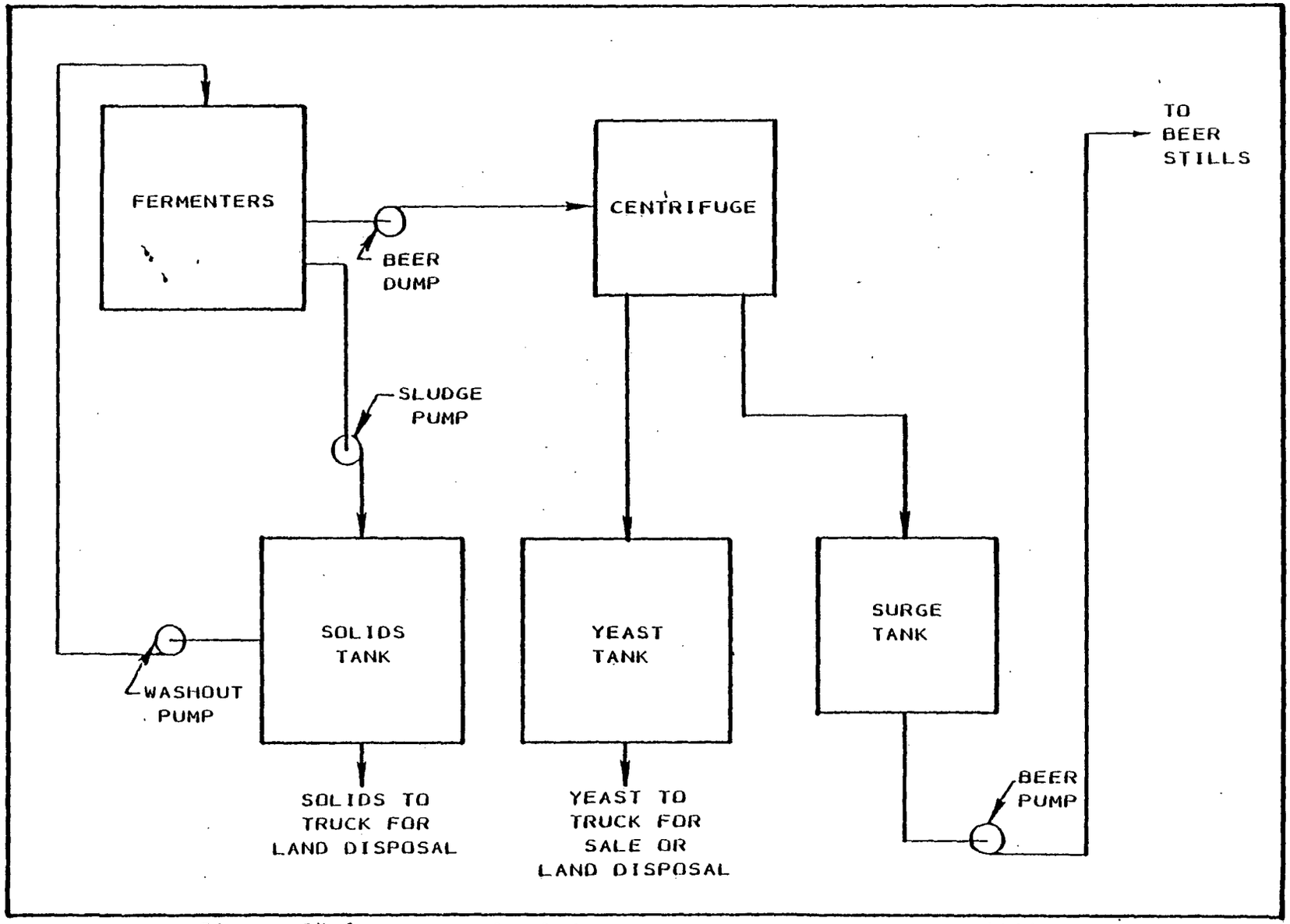

Figure IX-3. Removal of fermenter bottoms and yeast (80).

Both VIRIL and Puerto Rico Distillers already recover fusel oils and heads and burn them as fuel on a continuous basis. The heads and fusel oils would otherwise become part of the waste load requiring treatment.

COST

Cost estimates from Puerto Rico Distillers and VIRIL (80) for some of the options which have been discussed are presented in Table IX-1. Estimates were available for the removal of fermenter bottoms, centrifugation of molasses, yeast recycling (without molasses pretreatment), and burning of fusel oils and heads. Cost breakdowns for each are given in Appendix IX-11 (80). Except for the estimate for oil burning, none of these estimates incorporate any cost savings due to by-product recovery, or to positive impacts on rum production or waste treatment. Such savings could be considerable.

TABLE IX-1. COST ESTIMATES FOR POLLUTANT REDUCTION THROUGH PROCESS MODIFICATIONS, FROM PUERTO RICO DISTILLERS AND VIRIL* (80)

Process	Puerto Rico Distillers		VIRIL	
	Capital	Annual	Capital	Annual
Removal of Fermenter Bottoms	$50,000	$38,260	$58,000	$26,840
Yeast Recycling by Centrifugation	$200,000	$77,150	$232,000	$87,660
Molasses Centrifugation	$110,000	$59,585	N/A†	N/A
Burning of Fusel Oils and Heads	$15,000	$0#	$11,500	$0

*Submitted January 30, 1978.
†N/A = Not available.
#Assumed to be offset by fuel savings.

TABLE IX-2. BREAKDOWN OF COST ESTIMATES FOR POLLUTANT REDUCTION THROUGH PROCESS MODIFICATIONS, FROM PUERTO RICO DISTILLERS AND VIRIL (80)*

REMOVAL OF FERMENTER BOTTOMS (VIRIL)

Capital Costs

Solids tank	$15,000
Pumps, piping and electrical	$15,000
Structural	$8,000
Dump truck	$20,000
Total	$58,000

Annual Operating Costs

Depreciation	$5,800
Maintenance	$1,740
Labor	$12,000
Electricity	$1,500
Financing	$5,800
Total	$26,840

REMOVAL OF FERMENTER BOTTOMS (PUERTO RICO DISTILLERS)

Capital Costs

Pit tank	$2,000
Slurry pump	$3,000
Thickeners	$10,000
Water storage tank	$5,000
Water pump	$1,500
Piping, rearrangment of fermenters, etc.	$3,500
Dump truck	$20,000
Electrical installation, etc.	$2,000
Contingencies	$3,000
Total	$50,000

Annual Operating Costs (Direct)

Transportation and dumping of decanted slurry	$14,400
Subtotal	$14,400

*Submitted January 30, 1978.

Table IX-2 (continued)

Annual Operating Costs (Indirect)	
Repairs and maintenance	$2,500
Property tax	$1,200
Truck license	$400
Depreciation	
Truck	$4,000
Other equipment	$3,000
Insurance	$500
Payroll benefits (40% in statutory and corporate benefits)	$5,760
Financing	$4,500
Contingencies	$2,000
Subtotal	$23,860
Total	$38,260

CENTRIFUGATION OF FERMENTER BEER (PUERTO RICO DISTILLERS)

Capital Costs	
Centrifuges (2)	$120,000
Centrifuged mash receiving tank	$18,000
Centrifuge feed pumps (2)	$6,000
Yeast cream receiving tanks (2)	$5,000
Yeast cream pump	$3,000
Yeast washing tank	$3,000
pH controller	$4,000
Piping, valves, electrical, installation, etc.	$10,000
Engineering consulting fees	$25,000*
Contingencies	$6,000
Total	$200,000
Annual Operating Costs (Direct)	
Labor (1 laborer)	$8,280
Chemicals	$4,000
Electric power	$5,000
Subtotal	$17,280
Annual Operating Costs (Indirect)	
Repairs and Maintenance	$5,000
Property Tax	$7,860
Depreciation	$20,000
Insurance	$700
Payroll Benefits (40% in statutory and corporate benefits)	$3,310

Table IX-2 (continued)

Financing	$18,000
Contingencies	$5,000
Subtotal	$59,870
Total	$77,150

*For study of yeast recycling following centrifugation.

CENTRIFUGATION OF FERMENTER BEER (VIRIL)

Capital Costs

Centrifuges (2) (Sharples Model P-3400)	$160,000
Electric generators	$50,000
Pumps, piping and electrical	$10,000
Structural	$12,000
Total	$232,000

Annual Operating Costs

Depreciation	$23,200
Maintenance	$4,860
Labor	$6,000
Electricity	$30,400
Financing	$23,200
Total	$87,660

CENTRIFUGATION OF MOLASSES (PUERTO RICO DISTILLERS)

Capital Costs

Molasses diluting	$5,000
Mixer, in line	$5,000
Centrifuge	$60,000
Solids recovery tank	$2,000
Centrifuged molasses tank	$5,000
Pump for 60° Brix molasses	$3,000
Piping, valves, eletrical installation, etc.	$4,000
Dump truck	$20,000
Slurry pump	$3,000
Contingencies	$3,000
Total	$110,000

Annual Operating Costs (Direct)

Transportation and dumping slurry	$14,400
Electric power	$3,000
Subtotal	$17,400

Table IX-2 (continued)

Annual Operating Costs (Indirect)	
Repairs and Maintenance	$3,000
Property tax	$4,325
Depreciation	
Truck	$4,000
Other equipment	$9,000
Insurance	$800
Truck license	$400
Payroll Benefits (40% in statutory and corporate benefits)	$5,760
Financing	$9,900
Contingencies	$5,000
Subtotal	$42,185
Total	$59,585
BURNING OF FUSEL OILS AND HEADS (PUERTO RICO DISTILLERS)	
Capital Costs	
Storage tank	$5,000
Pump	$1,500
Burner	$3,500
Piping and installation	$3,000
Other	$2,000
Total	$15,000
BURNING OF FUSEL OILS AND HEADS (VIRIL)	
Capital Costs	
Storage tank	$5,000
Burner	$2,500
Pump and piping	$4,000
Total	$11,500

X. AQUACULTURE

INTRODUCTION

The fermentation and distillation of rum from cane molasses produces relatively large quantities of hot acidic wastes, high in BOD, COD, solids, and Kjeldahl nitrogen (80). Presently, these wastes are disposed of untreated to inshore waters off Puerto Rico and St. Croix, Virgin Islands. In an effort to develop a satisfactory solution to the problem of rum slops disposal, the rum distillers have given more attention to evaluating aquaculture as a method for utilizing these wastes. Aquaculture has the advantages of requiring little or no pretreatment of the effluent, considerable potential for recycling nutrients from the waste into a harvestable crop, and providing acceptable levels of predischarge treatment.

In concept, the advantages of aquaculture are numerous; however, several obstacles stand between the concept and its practical application. Currently, there is limited knowledge of the manner in which rum slops can best be used in an aquaculture project, and what species or chain of species leading to a harvestable crop can utilize the slops efficiently. Questions as to the physical facility requirements, whether these facilities can be located in reasonable proximity to the rum distilleries, and what the projected capital and operating costs would be are still unanswered.

PREVIOUS RESEARCH IN MOSTOS UTILIZATION BY AQUATIC ORGANISMS

The industry has solicited proposals for research into mostos utilization in aquaculture in an effort to answer these questions. A preliminary proposal for a feasibility study was received from Dr. Colin E. Nash, Oceanic Institute, Makapuu Point, Waimanalo, Hawaii (80). A draft proposal was also solicited and received from Dr. Oswald A. Roels, University of Texas Marine Science Institute, Port Aransas Marine Laboratory (80). Dr. Roels has previous experience with an aquaculture project on St. Croix, although this earlier study did not involve mostos. Dr. Roels has proposed to analyze the nutritive value of slops which will, in turn, aid in the selection of an organism or organisms suitable for treating and recycling each component of the waste. Selection of suitable organisms will be based on the following criteria:

- Potential for removal of dissolved inorganic nitrogen and/or phosphate
- Removal of particulate protein and carbohydrate
- Removal of soluble protein and carbohydrate through culturing of unicellular heterotrophs. These, in turn, may be harvested and used directly as a protein source or fed to a higher trophic level aquatic organism.

Determination of tolerance levels to various concentrations of mostos and the ability of test organisms to grow and provide satisfactory waste treatment will also be investigated. Finally, Dr. Roels's study would attempt to provide preliminary data on the input requirements and potential yields of aquaculture systems.

The University of Puerto Rico is actively involved in aquaculture research. The principal objective of their studies has been to discover additional sources of protein-rich foods for human consumption in Puerto Rico. Most of the current research concerns the growth of the fresh-water fish, Tilapia aurea. Only one study utilizing mostos wastes has been conducted. This study investigated the effects of mostos on Tilapia aurea under culture conditions and on the water quality of the culture system (80).

A method for efficiently breeding and culturing fish, shellfish, and zooplankton with waste cane molasses has been developed by Kawano, et al (53). Applicability of this research to potential mostos aquaculture experiments, however, is questionable due to an inadequate description of the waste molasses used in Kawano, et al, studies. Characteristics of the waste molasses and its similarities to mostos are not provided in the patent information filed by the authors (53).

Tosteson, et al(107) have conducted numerous studies with mostos to determine its effect on marine organisms. Their work examined four components of mostos:

- Filtered crude mostos suspension (Fraction F1)
- Crude mostos dialyzed against distilled water (Fraction F2)
- Precipitate formed by the addition of three volumes of cold ethyl alcohol to crude mostos fraction (Fraction F3)
- Fraction of crude mostos soluble in cold ethyl alcohol (Fraction F4).

In their experiments, they used cultures of the marine algae Chlorella vulgaris, and isolated the marine bacterium Photobacterium fischer from sea water. Their results indicated the following:

- Fraction F1 appeared to promote the growth of marine bacteria while inhibiting that of micro-algal cells. The crude mostos fraction may have inhibited the algal growth by acting directly on the cells or by simply promoting the growth of bacteria in the algal suspensions.
- Nondialyzable high molecular weight components of Fraction 2 promoted the growth of algae and inhibited bacterial growth. This suggested that the alcohol-treated material (Fractions 3 and 4) promoted both the growth of the algae and the bacteria.
- The inhibitory effect of Fraction F1 on algal growth appeared to be due to the presence of low molecular weight components which were removed by dialysis. These dialyzable materials at high concentrations appeared to stimulate bacterial growth while obscuring the inhibitory effects of high molecular weight material.
- The crude mostos fraction (F1) contained materials of high molecular weight that were stimulators to micro-algal growth; however, the presence of dialyzable low molecular-weight substances in this same fraction promoted greater bacterial growth which, in turn, restricted or inhibited algal growth.

POTENTIAL FOR UTILIZATION OF NUTRIENTS

SCS Engineers contacted two noted authorities in aquaculture research for information on the potential for utilization of mostos in crustacean and higher organism aquaculture systems; Dr. Douglas Conklin, Associate Director of the Aquaculture Program, Bodega Marine Laboratry of the University of California, and Dr. Michael Hartman, Division of Natural Sciences, Savanah State College, Georgia. Copies of their correspondence are included in Appendix A. Both agreed that the mostos material was not adaptable as a feed ingredient in aquaculture systems. Their evaluation was based on several factors including the following:

- The BOD and COD are very high indicating that the mostos is very high in organic carbon compounds.
- High carbon content is further substantiated by high carbohydrate content.
- Presence of significant amounts of carbon compounds will enhance growth of heterotrophic bacteria. These bacteria can create situations of lowered dissolved oxygen, as well as destroy the bacterial flora of a biological filter system,should a system of this type be in use as part of the treatment process.
- Levels of copper in mostos (average 32.8 ppm) are toxic to most shellfish and acutely toxic to the larval stages.
- Potential for bioaccumulation of copper and other metals by aquatic organisms may be considerable considering concentrations available.

Although additional research is needed in this area, the information currently available in the literature and from individuals active in this research field suggests that mostos is unsuitable for aquaculture systems.

XI. BIOLOGICAL TREATMENT SYSTEMS

INTRODUCTION

Biological treatment of rum slops has long been a proposed solution to the rum waste disposal problem (11). However, the consistently high BOD_5 has not favored aerobic treatment, and the effluent from anaerobic treatment has been demonstrated to be high in BOD_5 (2,000 to 10,000 mg/ℓ). Consequently, research has been directed at the use of combinations of biological systems (mainly anaerobic followed by aerobic processes) for the treatment of rum slops.

AEROBIC TREATMENT OF MOSTOS

A review of the literature indicates that the application of conventional aerobic processes (activated sludge or trickling filters) is beset by problems. In general, the literature reports that to be amenable to aerobic treatment the raw mostos would first have to be cooled to a temperature range conducive to mesophillic organisms (25 to 35°C), neutralized to pH 7.0-8.0, and have supplemental nutrients added (phosphorus and/or nitrogen).

Sen, et al. (92), reported that trickling filter treatment of undiluted molasses distillery waste was found to remove 75 percent of the BOD_5. A large filter area was needed due to the high concentration of BOD_5 in undiluted slops (18,000 to 50,000 mg/ℓ) and the low BOD_5 loading rate that can be applied

to the filter. The process was dismissed as inapplicable because of the space required by the filters.

Burnett (19) reported that the activated sludge process was unsatisfactory when used with a 10 percent solution of rum slops in domestic sewage. The maximum BOD_5 removal observed was 28 percent. Also, difficulties were caused by extensive foaming. However, the investigator found that the activated sludge process was highly efficient for the treatment of one percent slops in domestic sewage. Over 90 percent efficiency in BOD_5 and suspended solids removal was observed.

Kujala, et al. (61), estimated that in 1972 the cost for operating an activated sludge treatment plant for an incoming slops stream of 35,000 mg/ℓ BOD_5 at a flow of 1,000 m^3/day (0.26 MGD) would exceed $2.5 million per annum. Space requirements for the installation and the electrical loads for the necessary aeration equipment were estimated to be large. Consequently, the authors rejected activated sludge treatment of the raw slops on economic grounds.

ANAEROBIC TREATMENT OF MOSTOS

Anaerobic digestion has been widely investigated as a method for the treatment of molasses distilling mostos, and has been found to be a partially effective treatment alternative. Anaerobic digestion has the ability to handle the raw undiluted slops without the problems associated with aerobic biological treatment, e.g., sludge bulking. Various designed and operational methods for anaerobic digestion of mostos have been researched. The findings will be presented on the following pages.

Sen, et al., conducted experiments on laboratory scale anaerobic digestion of molasses distillery mostos in India (92). They found that it was possible to carry out anaerobic digestion of the waste at 37°C using a cow manure seed at a BOD_5 loading of 3.0 kg/m^3/day with a retention period of 10 days. The digestion gave an off-gas to waste volume ratio of 25:1, with an overall efficiency of 0.86 m^3 of gas per kg of BOD_5 digested. The gas was 60 percent methane. BOD_5 removals of more than 90 percent were obtained with a BOD_5 reduction from about 30,000 mg/ℓ to less than 1,000 mg/ℓ. Digester failure was experienced at a loading of 3.8 kg/m^3/day with a retention time of eight days. Nutrient addition was found to be unnecessary. Recirculation of CO_2 after separation from other constituents of the digester gas was more effective than mechanical stirring or recirculation of the entire digester gas in improving BOD_5 and volatile solids reduction and the percentage of methane in the gas.

Shea, et al., in a study for the EPA investigated an anaerobic digestion pilot plant for the determination of design criteria for the full-scale application of anaerobic treatment and to estimate the full-scale costs for such a process (93). The pilot system gave a COD removal efficiency of 57 to 70 percent at a solids retention time greater than 40 days. The influent mostos stream contained 70,000 to 100,000 mg/ℓ. The range of total annual costs (including amortization and operating and maintenance costs) was estimated to vary from \$3.74/m^3 treated at a design flow of 190 m^3/day to \$2.13/m^3 treated at a design flow of 1,140 m^3/day (January 1974 cost levels). The recovery of methane gas as an

energy by-product of the anaerobic treatment was estimated to reduce the above-mentioned unit treatment costs from one-third at the 190-m^3/day flow rate to two-thirds at the 1,140-m^3/day flow. It was also concluded that additional treatment would be required to meet the proposed effluent quality levels as defined in the distillery's respective NPDES permits.

Basu and Leclerc compared the treatment of beet molasses distillery mostos by thermophilic and mesophilic anaerobic digestion (9). This research determined that gas production was less consistent in conventional digestion when compared to units with the thermophilic or mesophilic digestion. This was attributed to the loss of gas during settling and entrained in effluent solutions. Digester loading had no direct bearing on gas production, and instead was related to retention time. The efficiency of rate of methane production during high rate digestion was related to CO_2 recirculation, as shown by Sen and Bhaskaran (92), or to efficient mechanical stirring.

All the experiments were done with 10 days retention time at varying BOD loadings of 2.0, 2.5, 3.2, and 3.5 kg/m^3/day. The thermophilic digestion BOD removal for the first three loadings were 97.2, 95.7, and 87.5 percent respectively, as against corresponding removals of 96.0, 96.4, and 95.9 percent BOD removal for mesophilic digestion. Both thermophilic and mesophilic digestion exhibited digester upset at the 3.5 kg BOD/m^3/day loading. Basu and Leclerc concluded that, taking all aspects into consideration, thermophilic digestion performs as well as

mesophilic digestion, but the process yields only minor benefits at the expense of higher costs needed to maintain the digester at 55°C rather than 35°C (9).

Hiatt, et al., found that the start-up and initial acclimatization period was very significant in the anaerobic treatment of mostos (48). They determined that nearly three months were required for the biological system to acclimatize itself to a new substrate. After stabilization, a change in the loading rate required 10 to 15 days for a return to normal operating conditions. Dilution varied the COD loading rate by between 2.7 to 11.5 kg/m^3/day. The COD reduction was between 70 and 80 percent. The greatest COD reduction (75 to 80 percent) was found with loadings in the 2.7 to 4.8 kg/m^3/day range.

Additional references concerning anaerobic digestion of rum mostos are included in the bibliography.

In conclusion, the properties associated with anaerobic treatment of rum distillery mostos are:

- The loading rate upper limits (before digester upset) for undiluted mostos are approximately 3.2 kg BOD/m^3/day and 6.0 to 10.0 kg COD/m^3/day.
- Dilution with municipal wastewater improves digester performance and stability and adds valuable nutrients.
- The anaerobic digester for optimum performance must be fed an equalized waste stream.

- Recirculating CO_2 gas (scrubbed to remove H_2S) and/or mechanical agitation of the digester contents improves the organic matter removal efficiency of the digester and can lower the retention time necessary for treatment.
- The retention time for anaerobic digestion could be as short as 5.6 days, although normal performance requires about 10 days.
- Volatile acid production must be controlled by either chemical addition or by dilution with other wastewater.
- Gas production is approximately 55 to 65 percent methane and 45 to 55 percent carbon dioxide.
- The effluent from anaerobic digesters treating rum distillery mostos must have some form of additional treatment to meet the proposed NPDES limitations.

ANAEROBIC/AEROBIC SYSTEMS

Cosculluela, in Cuba, investigated a biological system for the treatment of molasses distillery waste (11). His studies ran for a period of three years. Cosculluela recommended that mostos be diluted four times with water, mixed with a bacterial culture rich in ammonifying organisms, and then digested in an open concrete tank for a period of four days. He suggested that the effluent then be passed through biological filters for additional stability.

Recent research in Russia and Poland has indicated the feasibility of biological systems for the treatment of molasses fermenting and distilling wastes. In Russia, stillage was treated by

anaerobic fermentation which reduced the initial BOD_T of greater than 10 g/ℓ by 90 percent. This anaerobic effluent was adjusted to BOD_T 800 to 1,300 mg/ℓ by dilution with municipal wastewater and treated by activated sludge to give an effluent of BOD_T 24 to 60 mg/ℓ, and COD 180 to 240 mg/ℓ (114). In Poland, spent molasses from feed yeast production with a BOD_5 of 12,870 mg/ℓ and a pH of 4.4 were anaerobically fermented and then treated by the activated sludge process. Without phosphate nutrient addition the effluent from the system had a BOD_5 of 70 to 600 mg/ℓ; with phosphate addition the effluent BOD_5 concentration was 75 to 300 mg/ℓ (106).

Bhaskaran (10) reported that laboratory-scale anaerobic digestion reduced the BOD_5 of molasses distillery slops from about 30,000 mg/ℓ to the order of 1,000 mg/ℓ. The BOD-to-nitrogen ratio of the digested slops effluent indicated that it was suitable for activated sludge treatment. In the laboratory, activated sludge was built up by aerating sewage for a number of days. The activated sludge was then gradually acclimatized to the digester effluent. When stable conditions of operation were established, the results showed that aeration for 8 hr effected 93 percent BOD_5 removal and yielded an effluent with 63 mg/ℓ BOD_5.

THE ANAMET PROCESS

A proprietary biological system has been developed in Sweden incorporating anaerobic and aerobic treatment. This process, the

Anamet process, differs from other biological systems in that it has all of the following characteristics:

1. Use of a closed tank for the anaerobic stage rather than an open pond.
2. Recovery of methane gas for reuse as fuel.
3. Recycle of digester sludge within the anaerobic process after separation from the digester effluent.
4. Recycle of waste-activated sludge to the digester.
5. Optional nitrogen stripping with recovery of ammonium salts.

Other biological systems may have some of these characteristics, but Anamet necessarily has all of them.

Applicability to Rum Wastes

The rights to the Anamet process are held by the Swedish engineering firm of AB Sorigona, located in Staffanstorp, Sweden. Anamet was developed especially to handle wastes from fermentation and food industries, rich in carbohydrates and nitrogen compounds. Anamet has not been used to treat rum distillery wastes, but it is in full-scale operation at four beet sugar refineries and one potato alcohol distillery in Sweden. The process has also been in use for approximately two months on a pilot plant basis at a beet molasses alcohol distillery in Belgium (99). According to representatives of Sorigona, the results of existing Anamet plants have been excellent, with BOD_5 reductions of up to 99 percent being achieved. After visiting the facilities of Puerto Rico Distillers

and laboratory testing of the mostos, Sorigona's representatives expressed the belief that mostos could be treated successfully with Anamet (49). Subsequently, a pilot plant was constructed and began operating in July of 1978. The plant has a rated capacity of about 6,000 ℓ/day, or 0.7 percent of the total waste flow. Initial tests were begun with a 25-percent-by-volume digester seed of digested municipal sludge. Preliminary results are not yet available from this operation.

Equipment and Design

The equipment used and the design of Anamet plants vary with different wastewaters and with the required final BOD (99). Figure XI-1 presents a typical Anamet system. The anaerobic step is carried out in a steel tank. The tank has a side-mounted stirrer for mixing and to keep the sludge suspended. It also has a sedimentation zone in which sludge is separated from the wastewater and retained. From the top of the tank, methane gas is drawn off to a gas supply. The pH and temperature are optimized for the anaerobic conversion of the wastes into methane gas.

The aerobic step is carried out as an activated sludge process in a concrete basin or pond. Aeration is performed by surface aerators or in cold climates by submerged aerators.

Sedimentation of aerobic sludge and final clarification of the wastewater are carried out in a horizontal thickener with rakes or in other suitable equipment. Waste sludge is pumped to the anaerobic tank for stabilization.

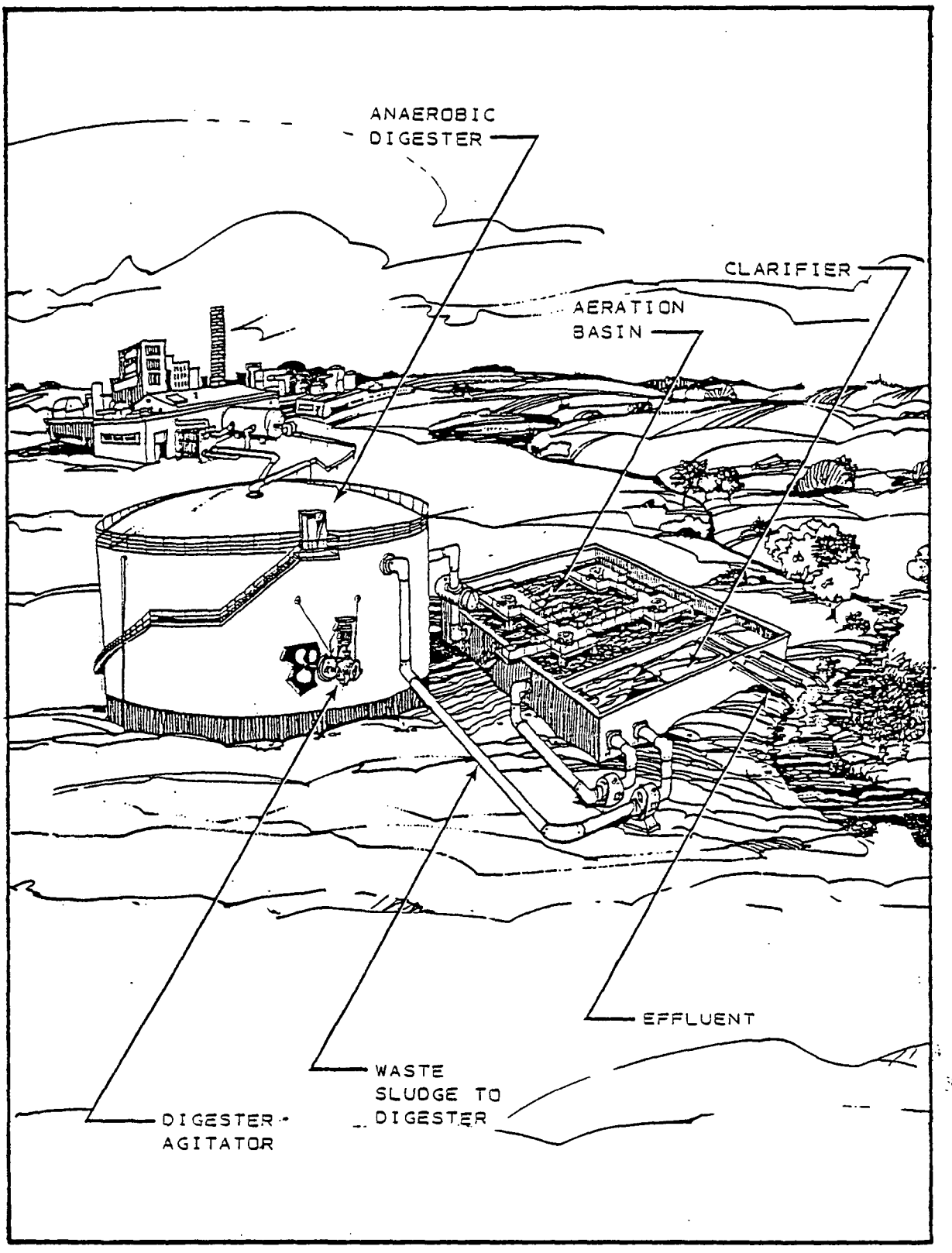

Figure XI-1. Typical Anamet System.

Where nitrogen reduction is involved, it is achieved by stripping the water with air after the anaerobic step. Most of the organic nitrogen compounds have by then been decomposed and the nitrogen remains as ammonium ions. Lime is added in order to increase the pH of the solution and this frees the ammonia before stripping. The ammonia is absorbed and a concentrated ammonium salt solution is produced which permits recovery of ammonia for reuse as a nutrient in the fermentation process.

Process Performance

The specific improvements in performance which Anamet systems attempt to provide over other anaerobic/aerobic systems include:

- Low overall sludge generation
- Short digester retention time
- High methane gas production
- Excellent BOD removal.

These features are discussed below.

In the Anamet process the sludge created in the aerobic stage is recycled into the anaerobic stage and converted into methane and carbon dioxide, thus reducing to a minimum the amount of solid waste which would have to be disposed of upon completion of the process. A Swedish sugar factory using the Anamet process reported no surplus sludge generated for the first three months after start-up of the full-scale plant (99).

The hydraulic retention time for the wastewaters in the anaerobic step may vary between two and 15 days, depending upon the nature of the wastewater. In order to avoid extensive digester

retention times, which would be a problem in the treatment of rum distillery wastes, the anaerobic sludge is retained in the system. This is usually achieved by separation in a settler and recirculation of the thickened sludge. The accelerated activity in the anaerobic step is also facilitated by the return of the biosludge from the aerobic step. This sludge acts as a "support" for the enzymes of the anaerobic bacteria (99).

The operating conditions of the system are maintained so as to maximize the anaerobic conversion of the waste into methane gas. The amount of gas produced depends on the wastewater and is reported to vary from 0.3 to 0.5 m^3 CH_4/kg BOD_7 digested. Sorigona suggests that the digester operating parameters as shown in Table XI-1 be maintained to optimize the conditions for the methane-forming bacteria (49).

TABLE XI-1. RECOMMENDED OPERATING PARAMETERS FOR ANAEROBIC DIGESTION IN THE ANAMET SYSTEM (49)

Parameter	Typical Operating Range
pH	6.8 - 7.5
Temperature	35 - 60°C
Bacterial retention time	>6 days
Wastewater retention time	2 - 20 days
Process toxicity levels	NH_4 <1,000 mg/ℓ
	K^+, Na^+ < 5,000 mg/ℓ
	H_2S < 100 mg/ℓ

Wastewaters with high inorganic salt concentrations, such as mostos, may tend to increase the minimum bacterial retention time shown in Table XI-1. In addition, there are toxic effects from high concentrations of inorganic compounds such as ammonium, potassium, sodiuum, and hydrogen sulfide in the wastewater. By adapting the bacteria, however, it may be possible to operate at concentrations higher than the normal toxic levels shown in Table XI-1 (49).

BOD reductions with Anamet vary depending upon the specific wastewater and the retention time, but Sorigona claims that BOD reductions of up to 99 percent have been experienced in the treatment of wastes other than rum distillery effluents. Sorigona reports that in various situations when the Anamet process has been used, between 70 and 90 percent of the original BOD was removed in the anaerobic step, leaving 10 to 30 percent to be treated in the aerobic step. This high degree of BOD reduction in the anaerobic step is primarily attributable to the production of methane gas. Methane has a low water solubility and, consequently, nearly all of it escapes from solution, thereby significantly reducing BOD (99).

The BOD reduction which has been reported for the second step of the Anamet process is very high, with up to approximately 93 percent reduction reported for some wastes. The efficiency of the BOD reduction in the aerobic step is attributed to the anaerobic pretreatment where the large molecules are hydrolyzed into substances which are easily assimilated. Moreover, a sufficient

amount of inorganic nitrogen remains in the water to facilitate the conversion of the biomass in the aerobic step (99).

A complete list of Anamet facilities existing and under construction is contained in Appendix B. It includes the type of waste treated and the BOD_5 reduction achieved at each plant, as reported by Sorigona (50). The types of wastes which have been treated with Anamet generally have had BOD_5 and COD concentrations considerably lower than those of Caribbean mostos (49,95,99). BOD_5 concentrations have been in the range of 4,000 to 13,000 mg/ℓ for many of the wastes treated, while mostos has a typical BOD_5 concentration of about 35,000 mg/ℓ. Therefore the results which will become available from Puerto Rico Distillers' pilot Anamet facility at Arecibo are of great importance in determining the adaptability of the process to mostos.

Costs

The pilot plant results are also critical to determing the costs of a full-scale operation. According to Sorigona (99), the investment costs for an Anamet plant are generally low, on the order of \$50 to \$100/kg of BOD_7 removed per day, due to the compactness of the plant. Operating costs are reportedly negligible since no nutrients are needed, and energy as well as personnel requirements are low. Sludge handling costs are also small. The value of methane gas produced is said to more than cover the operating costs for many applications (99).

AB Sorigona has provided Puerto Rico Distillers with a turnkey investment price estimate for a full-scale facility (50). The estimate is for a loading rate of 65,000 lb of BOD/day, 225,000 gal of mostos/day, and assuming 95 percent BOD_5 reduction. The turnkey investment cost estimate submitted April 4, 1978, in U.S. dollars was $\$2.55 \times 10^6$. This is a cost of approximately \$91/kg of BOD_5 removed per day. Methane gas production was estimated at the equivalent of 2,340 tons of fuel oil per year. Electrical power consumption was estimated at 1×10^6 kWh/yr; and sludge production at 6,700 m^3/yr. The cost of sludge transport was calculated at \$5/ton, but this does not include land (50).

One of the relative disadvantages of any of the anaerobic/aerobic biological treatment systems is that the effluent remains very dark in color. It would be technologically possible to remove the color from the effluent by means of large quantities of activated carbon or by ozone oxidation. Either method would be prohibitively expensive, however (24).

CULTIVATION OF FODDER YEASTS, BACTERIA, AND FUNGI IN SLOPS

The propagation of single strains of various yeasts, bacteria, and fungi in waste liquids is sometimes referred to as single-cell protein synthesis. Since these organisms can metabolize the organic materials of a substrate which itself contains relatively little protein, the high protein content of the biomass represents a transformation of the nitrogen of the substrate to form a protein biosynthesis. Previous investigations utilizing rum slops as a substrate have been performed primarily with certain yeasts and molds (considered fungi). When extracted and dried, the yeast or mold biomass (containing approximatley 40 to 46 percent protein) has a relatively high market value as an animal feed supplement (52).

A flow sheet for yeast manufacturing from molasses alcohol stillage, as it was performed at Hsinying By-Product Factory (21), is shown in Figure XI-2. Preceding the fermentation of the stillage, yeast inoculum was prepared using a shaking cultivation and two seed tanks. Molasses was employed for the culture to maintain strong and active yeast. The stillage coming from the distillery was cooled, but neither dilution nor sterilization was required. Stillage was continuously fed to a fermentation tank by displacement. Supplemental nitrogen and phosphorus were provided by the addition of a cream solution of urea, ammonium sulfate, and calcium superphosphate. Air was provided with a turbo blower. The temperature was regulated by a refrigeration cooling system designed with a heat exchanger to eliminate the possibility of contamination of the fermenter. The fermented stillage flowed from the tank to a

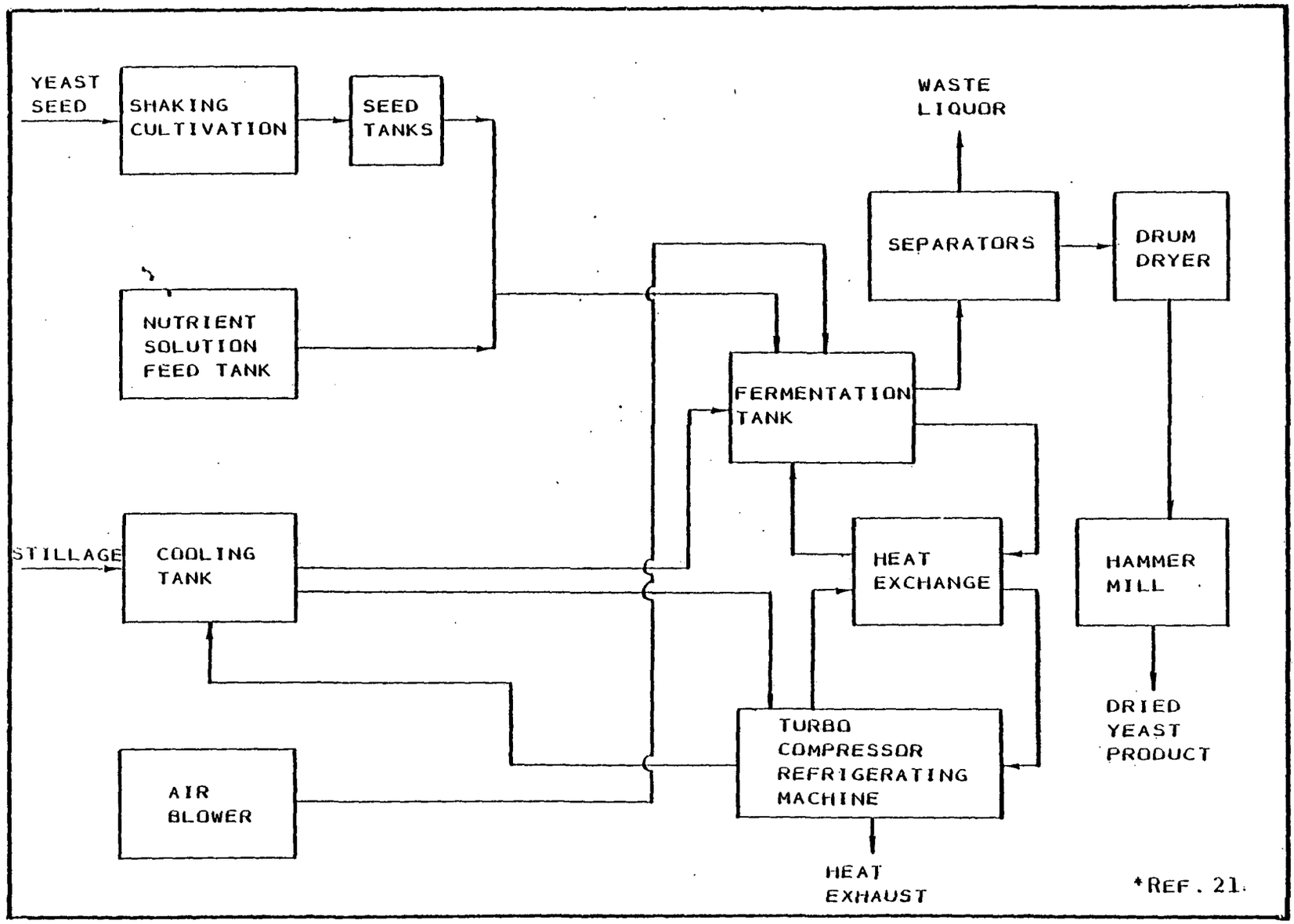

Figure XI-2, Yeast Cultivation in Molasses Distillery Stillage*

yeast separator. The separated yeast went through a drum dryer and hammer mill to form the final product.

Yeast cultivation of molasses alcohol stillage has been investigated in Taiwan (21, 64). Successful work has been performed with Torula utilis, which has a protein content of 46 percent. One ton of dry torula yeast was produced from 60 to 65 tons of stillage in a small, factory-scale aerobic fermenter. In spite of these excellent results, it is expected that in most cases up to 100 tons or more of stillage may be required to yield one ton of dry torula feed yeast (47), mainly due to the high BOD_5 of the Taiwanese stillage (approximately 60,000 ppm). Stillage BOD_5 values from Puerto Rican rum processors, in contrast, have been shown to be lower (average total BOD values were reported to be 32,900 and 54,900 ppm for 6 and 5 samples, respectively) (93).

Researchers in Taiwan (21) have reported that the carbon source for yeast growth is derived principally from the organic matter portion of the stillage. In laboratory and factory fermentations, the pH increased rapidly from 6.8 to 7.9 during yeast formation, indicating that much of the energy being used was from volatile acids, lactic acid, and other combined organic acids in the stillage. Stillages from beet and cane molasses are different in organic composition: the relative ash content of cane molasses is about 40 percent higher than that of its beet counterpart (96). It is well known that beet molasses provides a better substrate for yeast production than cane molasses. Therefore, it is expected that beet molasses stillage will make a better substrate than cane molasses stillage.

In the Taiwanese experiments (64) with Torula utilis, the BOD_5 concentration of the stillage was reduced by 33 percent, and the total solids concentration by 29 percent. In Soviet experiments (51) with de-yeasted beet molasses stillage, the cultivation of various fodder yeasts decreased the BOD_5 by 41 to 54 percent, and the total solids by approximately 37 percent. The Soviet experiments involved dilution of the stillage prior to yeast cultivation, as have experiments carried out by French investigators (61). These latter experiments indicated that dilution promoted the yeast activity.

The amount of income to be derived from yeast production is dependent upon the yeast yield and its marketability. The production costs may vary considerably, depending upon the extent to which additional nutrients must be supplied for the process, the retention times required, and the steps necessary to separate the yeast from the liquid. Research in some of these areas (80) is underway at Puerto Rico Distillers' laboratories in Arecibo, Puerto Rico. Experiments have already been conducted using Aspergillus phoenicius (a fungus) in fermentation tanks with up to 1,500-liter volumes. The highest BOD_5 reduction achieved in these tests was 59 percent at a retention time of seven days. Puerto Rico Distillers (80) regards a retention time of greater than two to three days as excessive to be useful in a full-scale operation, due to a lack of space and the high costs for tanks. These experiments also yielded disappointing results concerning the separation of the yeast from solution. Based on earlier experiments of a smaller scale at the

Rum Pilot Plant of the University of Puerto Rico, Puerto Rico Rum Distillers had hoped for strong formation of a mycelium, a visible mass of microbial cell matter, which would easily be removed from solution. However, mycelium formation in the experiments was not as consistent as had been expected. Further information in these areas, and on supplementary nutrient requirements as well, is needed to make production cost estimates.

Another important cost consideration is electrical power. Power is consumed primarily for aeration purposes, as many as 400 volumes of air being required per volume of rum slops (61). Power requirements for the operation of a cooling system may also be considerable since a large amount of heat is evolved during feed yeast cultivation, and must be continuously removed to safeguard fermentation activity and maximize yield.

After yeast cultivation and separation, the slops will still pose a substantial treatment problem due to the remaining high BOD_5 level. Because much of the organic matter of the waste will have been used in producing yeast, the value of the waste in the production of a gas by anaerobic digestion will be reduced. Its mineral content would be extremely high if evaporated to CMS for use as an animal feedstuff and, if the CMS were incinerated, the amount of heat recoverable for the needs of evaporation would be lower. On the positive side, however, the reduced strength of the waste could improve the operation and performance of aerobic biological treatment.

XII. BIBLIOGRAPHY

1. Allen, D.M., R.L. Sargent, and J.A. Obertreuffer. Treatment of combined sewer overflows by high gradient separation. EPA/600/2-77/015, Sala Magnetics, Inc., Cambridge, Massachusetts, March 1977. 130p. (Available from National Technical Information Service (NTIS) as PB-264 935).

2. Ammerman, C.B., P.R. Henry, S.G. Potter, and H.M. Becker. Effect of condensed molasses solubles as a feed ingredient for cattle. Presented at the XIth International Congress of Nutrition, Rio De Janeiro, August 1978.

3. APV Company, Inc. APV processing equipment. Bulletin CP-475, Tonawanda, New York, 1978. 19p.

4. Bacardi Corporation. Written testimony presented at adjudicatory hearings for Virgin Islands Rum Industries, Limited, Puerto Rico Distillers and Schenley Industries, Inc., 1978.

4a. Backus, A.A., and C. Haner, Jr. Volatile acids from distillery slops. U.S.P. 1,396,006 and 1,500,131, November 8, 1922.

5. Basora and Rodriguez, Consulting Engineers. Facilities planning for the Bayamon Wastewater Region. Draft environmental impact statement. Prepared for Puerto Rico Aqueduct and Sewer Authority, Commonwealth of Puerto Rico, March 1975.

6. Basora and Rodriguez, Consulting Engineers. Facilities planning for the Bayamon Wastewater Region. Vol. II. Engineering report. Prepared for Puerto Rico Aqueduct and Sewer Authority, Commonwealth of Puerto Rico, June 1976.

7. Basora and Rodriguez, Consulting Engineers. Facilities planning for the Bayamon Wastewater Region. Vol. IV. Oceanographic study. Prepared for Puerto Rico Aqueduct and Sewer Authority, Commonwealth of Puerto Rico, March 1976.

8. Basu, A.K. Characteristics of distillery wastewater. J. Water Pollut. Control Fed., 47:2184-2190, 1975.

9. Basu, A.K., and L. Leclerc. Comparative studies on treatment of beet molasses distillery waste by thermophilic and mesophilic digestion. Water Res., 4:103-104, 1975.

10. Bhaskaran, T.R. Utilization of materials derived from treatment of wastes from molasses distilleries. Adv. Water Pollut. Res., 2(2):85-104, 1964.

11. Biaggi, N. Studies on rum distillery wastes in Puerto Rico. Ph.D. dissertation. University of Michigan, Ann Arbor, 1956.

12. Bolton, D.H., D.A. Hines, and J.P. Bouchard. The application of the ICI Deep-Shaft Process to industrial effluents. Proc. Ind. Waste Conf., 31:344-351, 1976.

13. Boruff, C.S. Recovery of fermentation residues as feeds. Ind. Eng. Chem., 39:602-607, 1947.

14. Bradley, B.J. ICI Deep-Shaft Effluent Treatment Process. Presented at the 24th Annual Meeting Canada Section, American Water Works Association, Halifax, Nova Scotia, September 12-15, 1976.

15. Brau, H.M., Puerto Rico Distilleries, Inc. Supplemental testimony before the United States Environmental Protection Agency in the matter of National Pollutant Discharge Elimination System Permits for Puerto Rico Distillers, Inc., Schenley Industries, Inc., and Virgin Islands Rum Industries, Ltd.

16. Brooks, N.H. Conceptual design of submarine outfall. I. Jet diffusion. Technical Memorandum 70-1, California Institute of Technology, Pasadena, W.M. Keck Laboratory, 1970. 19p.

17. Brooks, N.H. Conceptual design of submarine outfall. II. Hydraulic design. Technical Memorandum 70-2, California Institute of Technology, Pasadena, W.M. Keck Laboratory, 1970. 12p.

18. Brooks, N.H. Dispersion in hydrologic and coastal environments. Report No. KH-R-29, California Institute of Technology, Pasadena, December 1972. 136p.

19. Burnett, W.E. Rum distillery wastes: laboratory studies on aerobic treatment. Water Sewage Works, 120:107-111, 1973.

20. Chakrabarty, R.N. Potash recovery - a method of disposal of distillery wastes and saving foreign exchange. Presented at Symposium in New Developments of Chemical Industries Relating to Ethyl Alcohol, Its By-Products and Wastes, New Delhi, October 14-16, 1963.

21. Chang, C.T., and W.L. Yang. Study of feed yeast production from molasses distillery stillage. Taiwan Sugar, 20:200-205, 1973.

22. Chatterjee, A.C. Production of fertilizer from distillery spent wastes. Presented at the 38th S.T.A. of India, Kanpur, 1972.

23. Conklin, D.E., Bodega Marine Laboratory, University of California. Personal communication to M.R. Caponigro, September 22, 1978.

24. Crowley, B.A., Schenley Distilleries, Inc. Supplemental testimony before the United States Environmental Protection Agency for the matter of National Pollutant Discharge Elimination Permits for Puerto Rico Distillers, Inc., Schenley Industries, Inc., Virgin Islands Rum Industries, Ltd.

25. Cruver, J.E., and J. Nusbaum. Application of reverse osmosis to wastewater treatment. J. Water Pollut. Control Fed., 46:301-311, 1974.

26. Culp, R.L., and G.L. Culp. Advanced Wastewater Treatment. Van Nostrand Reinhold, New York, 1971. 318p.

27. Damron, B.L. Condensed molasses solubles in poultry feed; final research summary to George H. Dorion, Bacardi Corp., Jacksonville, Florida.

28. Dedert Corporation. Dependable process equipment. Chicago Heights, Illinois, 1978. 9p.

29. Diaz-Medina, M. and P.F. Randel. Dried rum distillery stillage in laying rations. J. Agric. Univ. P.R., 62:149-155, 1978.

30. Dorian, G., Bacardi Corporation. Personal communication to K.V. LaConde, July 18, 1978.

31. Dorian, G., Bacardi Corporation. Personal communication to K.V. LaConde and C.J. Schmidt, July 20, 1978.

32. Dorian, G., Bacardi Corporation. Personal communication to K.V. LaConde, September 1, 1978.

33. Dorian G., Bacardi Corporation. Personal communication to K.V. LaConde, September 28, 1978.

34. Dorian G., Bacardi Corporation. Submitted testimony before the United States Environmental Protection Agency in the matter of National Pollutant Discharge Elimination Systems Permits for Puerto Rico Distillers, Inc., Schenley Industries, Inc., and Virgin Islands Rum Industries, Ltd.

35. Edwards, J.Y., Pacific Molasses Company. Supplemental testimony before the Environmental Protection Agency in the matter of National Pollutant Discharge Elimination System Permits for Puerto Rico Distillers, Inc., Schenley Industries, Inc., and Virgin Islands Rum Industries, Ltd.

36. Environmental Science and Engineering. Draft development document for effluent limitations and new source performance standards: miscellaneous foods and beverages point source category. Gainesville, Florida, March 1975. 5 vols.

37. Falcman, W. Combustion of molasses slops as a solution of the wastewater problem in the alcohol industry. Szeszipar, 19:103-105, 1971.

38. Gabel, D.H., Lederle Laboratories. Personal communication, March 1978.

39. Gartner, R.J.W, and P.K. O'Rourke. Effects of antibiotics, dried molasses distillers solubles and zeranol in all-sorghum grain rations fed to steers. Aust. J. Exp. Agric. Anim. Husb., 17:214-220, 1977.

40. Gillies, M.T. Animal Feeds from Waste Materials. Noyes Data Corporation, Park Ridge, New Jersey, 1978. 346p.

41. Gross, R.W., Jr. High purity oxygen activated sludge process for industrial wastewater. Union Carbide Corporation, South Charleston, West Virginia.

42. Gyger, R.F., and E.L. Doerflein. Save energy - use O_2 on wastes. Hydrocarbon Process., 55:96-100, 1976.

43. Haner C. U.S.P. 1,430,160.

44. Harada, Y., K. Hirano, and T. Koike. Closed system in fermentation wastewater treatment. Presented at Chemical Engineering Congress, Denver, August 29, 1977. 5p.

45. Hartner, M., Savannah State College. Personal communication to M.A. Caponigro, October 9, 1978.

46. Heres Gonzalez, A. Personal communication to K.V. LaConde, September 22, 1978.

47. Heres Gonzalez, A. Personal communication to K.V. LaConde, October 13, 1978.

48. Hiatt, W.C., A.D. Carr, and J.F. Andrews. Anaerobic digestion of rum distillery wastes. Proc. Ind. Waste Conf., 28:966-976, 1973.

49. Huss, L. Methane production from Cassava Distillery stillage with the Sorigona WWTS. Presented at the Semario Internacional Sobre Tratamento de Vinhoto, Rio De Janeiro, August 1976. 6p.

50. Huss, L., A.B. Sorigona. Personal communication. April 1978.

51. Il'ina, L.D., N.G. Sitnik, E.I. Podgurskaya, M.S. Pavlovskaya, and L.V. Rudnichenko. An investigation of the chemical composition of molasses stillage with an evaluation of the degree of its purification. Fermentn. Spirt. Prom., 1974: 30-34.

52. Jackson, C.J. The treatment of distillery and antibiotics wastes. In: Waste Treatment; Proceedings of the Second Symposium on the Treatment of Wastewaters, 1959. Pergamon Press, New York, 1960. pp. 226-239.

53. Kawano, T., H. Kojima, H. Ohosawa, and K. Morinaga. Feed and method of aquianimals cultivation. Patent 3,939,279, filed June 27, 1973, awarded February 17, 1976.

54. Knezek, B.D., and R.H. Miller, eds. Application of sludges and wastewaters on agricultural land; a planning and educational guide. North Central Regional Research Publication 235, Ohio Agricultural Research and Development Center, Wooster, October 1976. 98p.

55. Koh, R.C.Y., California Institute of Technology, Pasadena. Personal communication, July 1978.

56. Koh, R.C.Y., and N.H. Brooks. Fluid mechanics of wastewater disposal in the ocean. Annu. Rev. Fluid Mech., 7:187-211, 1975.

57. Krabbe, E., U.S. EPA Region II Facilities Technology Division. Testimony in rebuttal to Bacardi Corporation for the adjudicatory hearing in the matter of Puerto Rico Distillers, Inc., Schenley Industries, Inc., and Virgin Islands Rum Industries, Ltd.

58. Krabbe, E., U.S. EPA Region II Facilities Technology Division. Testimony in rebuttal to Schenley Industries, Inc., and Virgin Islands Rum Industries, Ltd., for the adjudicatory hearing in the matter of Puerto Rico Distillers, Inc., Schenley Industries, Inc., and Virgin Islands Rum Industries, Ltd.

59. Krabbe, E., U.S. EPA Region II Facilities Technology Division. Testimony in rebuttal to Puerto Rico Distillers, Inc. for the adjudicatory hearing in the matter of Puerto Rico Distillers, Inc., Schenley Industries, Inc., and Virgin Islands Rum Industries, Ltd.

60. Krabbe, E., U.S. EPA Region II Facilities Technology Division. Testimony of Erik Krabbe for the adjudicatory hearing in the matter of Puerto Rico Distillers, Inc., Schenley Industries, Inc., and Virgin Islands Rum Industries, Ltd.

61. Kujala, P., R. Hull, F. Engstrom, and E. Jackman. Alcohol from molasses as a possible fuel, and the economics of distillery effluent treatment. Sugar Azucar, 1976:28-39.

62. Kulperyer, R.J., and L.C. Matsch. Comparison of treatment of problem wastewaters with air and high purity oxygen activated sludge systems. Presented at the International Association of Water Pollution Research on Design - Operation Interactions at Large Wastewater Treatment Plants, Vienna, September 8-12, 1975.

63. LaConde, K.V., R.J. Lofy, and R.P. Stearns. Municipal sludge agricultural utilization practices - an environmental assessment. EPA Contract 68-01-3265, SCS Engineers, Long Beach, California. (In press.)

64. Lai, C.L., Y.T. Chuang, and S.L. Sang. A research report on the treatment of agriculture and industrial waste. Taiwan Sugar, 21:37-41, 1974.

65. Lesoffre et Cie. Substituting ammonium for potassium in by-products from the sugar and fermentation industries. French Patent 1,497,480, filed March 29, 1966, awarded October 13, 1967.

66. Lopez, J.I., Puerto Rico Distillers. Personal communication, September 29, 1978.

67. Lopez, J.I., Puerto Rico Distillers. Personal communication, October 4, 1978.

68. Lyman, C.M., K.A. Kuikan, and F. Hale. Essential amino-acid content of farm feeds. J. Agr. Food Chem., 4:1008-1113, 1956.

69. Maphis, S.W., Briscoe Maphis. Personal communication to K. V. LaConde, October 10, 1978.

70. Mattson, M.E. Membrane desalting gets big push. Water Wastes Eng., 12:35-42, April 1975.

71. Nelthropp, C., Virgin Islands Rum Industries, Limited. Personal communication to K.V. LaConde and C.J. Schmidt, July 27, 1978.

72. Olszewski, C. Separation of potassium compounds in view of their reuse. French Patent 1,377,487, filed September 24, 1963, awarded November 6, 1964.

73. Oral testimony presented at adjudicatory hearings for Virgin Islands Rum Industries, Inc., Puerto Rico Distillers, and Old San Juan, July 1977.

74. Page, A.L., Department of Soil and Environmental Science, University of California, Riverside. Personal communication to K.V. LaConde, September 26, 1978.

75. Perez Escolar, R. Reclamation of a saline-sodic soil by use of molasses and distillery slops. J. Agric. Univ. P.R., 50:209-217, 1966.

76. Perez Escolar, R. Separation and characterization of the active soil aggregating agent present in distillery slops. J. Agric. Univ. P.R., 51:304-308, 1967.

77. Perez Escolar, R. Stability of soil aggregates treated with distillery slops or blackstrap molasses. J. Agric. Univ. P.R., 50:174-185, 1966.

78. Perez Escolar, R. Use of molasses and distillery slops with sulfur for the reclamation of a saline-sodic soil from Puerto Rico. J. Agric. Univ. P.R., 51:55-65, 1967.

79. Phung, T., L. Barker, D. Ross, and D. Bauer. Land cultivation of industrial wastes and municipal solid wastes; state-of-the-art study. EPA/600/2-78-140a, SCS Engineers, Long Beach, California, August 1978. 2 vols.

80. Puerto Rico Distillers, Inc. Proposals for the treatment of rum distillery wastes. Submitted with Schenley Industries, Inc., and Virgin Islands Rum Industries, Ltd.

81. Radhakrishnan, I., S.B. De, and B. Nath. Evaluation of the loading parameters for anaerobic digestion of cane molasses distillery wastes. J. Water Pollut. Control Fed., 41:R431-R440, 1969.

82. Ramirez Rivera, R., and H.M. Brau, Puerto Rico Distillers. Personal communication to K.V. LaConde and C.J. Schmidt, July 21, 1978.

83. Reich, G.T. Production of carbon and potash from molasses distillery. Trans. Am. Inst. Chem. Eng., 61:233-252, 1945.

84. Rivera, L.H. Soil survey, Virgin Islands of the United States. U.S. Government Printing Office, Washington, D.C., 1970. 81p.

85. Roberts, N., and J.B. Hardwick. High rate trickling filter pilot plant studies in distillery waste. Proc. Ind. Waste Conf., 6:80-87, 1951.

86. Roberts, R.C Soil survey, Puerto Rico. Soil Survey Report 1936 Series, No. 8, U.S. Government Printing Office, Washington, D.C., 1942. 503p.

87. Rodriguez, J., Bacardi Corporation. Supplemental testimony to the United States Environmental Protection Agency in the matter of National Pollutant Discharge Elimination System Permits for Puerto Rico Distillers, Inc., Schenley Industries, Inc., and Virgin Islands Rum Industries, Ltd.

88. Rossoff, G., Standard Brands. Personal communication to K. V. LaConde, August 17, 1978.

89. Rubin, A.J. Removal of trace metals by foam separation processes. J. Am. Water Works Assoc., 60:832-846, 1968.

90. Sanford, D., Eco-Research Limited. Personal communication, August 1978.

91. Sawyer, C.N., and E.J. Anderson. Aerobic treatment of rum wastes. Water-Sewage Works, 96:112-114, 1949.

92. Sen, B.P., and T.R. Bhaskaran. Anaerobic digestion of liquid molasses distillery wastes. J. Water Pollut. Control Fed., 34:1015-1025, 1962.

93. Shea, T.G., E. Ramos, J. Rodriguez- and G.H. Dorion. Rum distillery slops treatment by anaerobic contact process. Bacardi Corporation, San Diego, Puerto Rico, July 1974. 109p. (Available from National Technical Information Service (NTIS) as PB-238 291).

94. Skirstymonskii, A.I., M.S. Sushi, and T.N. Pukhovaya. Partial elimination of salt from vinasse during its concentration. Ferm. Spirt. Prom., 37(7):26-27, 1971. (Russian).

95. Skogman, H. Effluent treatment of molasses based fermentation wastes. Presented at the Effluent Treatment in the Biochemical Industries Conference, October 1977.

96. Soldevila, M., and M. Rojas Daporta. Effect of different levels of sugar cane molasses on egg production. J. Agric. Univ. P.R., 60:631-634, 1976.

97. Soldevila, M., and R. Irizary. Influence of dry rum distillery slops in diets for white leghorn hens on laying rate, feed conversion, and egg size and quality. J. Agric. Univ. P.R., 61:465-469, 1977.

98. Sopper, W.E., and L.T. Kardos, eds. Conference on Recycling Treated Municipal Wastewater through Forest and Cropland EPA/660/2-74-003, U.S. Environmental Protection Agency, Washington, D.C., 1974. 463p.

99. Sorigona, A.B. The Amamet Process. Chemapec, Inc., Woodbury, New York, 1978. 8p.

100. Sowa, W. Trip report for Association of Canadian Distillers' Third Liquid Feed Symposium, American Feed Manufacturers Association. Report ORF-73-2, Ontario Research Foundation, Ottawa, Canada, 1973.

101. Stern, A.M., L.L. Gasner, and F.A. Sanders. An economical low-energy bio-oxidation process for the treatment of high BOD wastewaters. Proc. Ind. Waste Conf., 29:881-888, 1974.

102. Stros, F., R. Petkvova, V., and V. Varvazovsky. Desalted molasses stillage as cattle feed. Kvasny Prum., 13:155-157, 1967. (Czech).

103. Struzeski, E., EPA. Personal communication to K.V. LaConde, October 12, 1978.

104. Struzeski, E., EPA. Personal communication to H. Thron, October 17, 1978.

105. Tolaney, M. Treatment of high strength citrus wastewater with high purity oxygen activated sludge process. Proc. Ind. Waste Conf., 30:171-183, 1975.

106. Tomczynska, J. Activated sludge as a second stage of biological treatment of wastewaters from molasses slops-process feed yeast production. Pr. Inst. Lab. Badaw. Przem. Spouzyw., 24:75-93, 1974.

107. Tosteson, T.R., B.R. Zaidi, D. Hale, and K. Verner. The effect of the mosto on the growth of marine microorganisms. Report No. RPP:1-73, Agricultural Experiment Station, University of Puerto Rico, Mayaguez, October 1973. 35p.

108. U.S. Crop Reporting Board. Commercial fertilizers: consumption in the United States. Sp. Cr. 7, U.S. Department of Agriculture, Washington, D.C., Statistical Reporting Service, May 1971.

109. U.S. Crop Reporting Board. Commercial fertilizers: consumption of commercial fertilizers, primary plant nutrients and micronutrients. Statistical Bulletin 472, U.S. Department of Agriculture, Washington, D.C., November 1976. 64p.

110. U.S. Environmental Protection Agency. Environmental Protection Agency ocean dumping regulations and criteria (40 CFR 220-229....43 FR 1071, January 6, 1978). Environ. Reporter: Fed. Regul., 131:8101-8133.

111. U.S. Environmental Protection Agency. Effluent Guidelines Division. Development document for interim final and proposed effluent limitations guidelines and new source performance standards for the fruits, vegetables and specialties segments of the canned and preserved fruits and vegetables point source category. EPA 440/1-75/046, Group I, Phase II. October 1975. 520p.

112. U.S. Federal Water Pollution Control Administration. Advanced waste treatment research program, July 1964-July 1967; summary report. Cincinnati, Ohio, 1968. 103p. (Available from National Technical Information Service (NTIS) as PB-216 647).

113. Virgin Islands Sewage Treatment Plant. Personal communication to K.V. LaConde, October 13, 1978.

114. Vitkovskaya, V.A., Y.M. Kravets, E.S. Adamenko, M.D. Lagutenko, T.I. Shamatko, L.R. Zharova, and Y.A. Karanoy. Biochemical purification of wastewaters of alcohol plants processing molasses. Biokhim. Ochistka Stohnykh. Vod. Mater. Resp. Konf., 1974:25-26.

115. Wallach, A., and A. Wolman. Treatment of distillery wastes. Sewage Works J., 14:382-401, 1942.

116. Wechsler, I., Sala Magnetics, Inc. Personal communication to M. Montgomery, September 26, 1978.

117. Whitaker, M.C. U.S.P. 1,504,730.

118. Zerban, F.W., and L. Sattler. Unfermentable reducing substances in molasses. Identification of d-Allulose. Ind. Eng. Chem., 34:1180-1188.

APPENDIX A

Aquaculture Correspondence

UNIVERSITY OF CALIFORNIA

BERKELEY • DAVIS • IRVINE • LOS ANGELES • RIVERSIDE • SAN DIEGO • SAN FRANCISCO SANTA BARBARA • SANTA CRUZ

AQUACULTURE PROGRAM
BODEGA MARINE LABORATORY

P. O. BOX 247
BODEGA BAY, CALIFORNIA 94923
(707) 875-3662

September 22, 1978

Michael A. Caponigro
SCS Engineers
4014 Long Beach Boulevard
Long Beach, CA 90807

Dear Mr. Caponigro:

I've examined the material you sent concerning the waste characteristics of molasses slops. My initial judgment is that this material is not readily adaptable to use for crustacean aquaculture in terms of a feed ingredient. It may have some usefulness in a more complex aquaculture scheme involving its use as a nutrient source for algae or some sort of detrital feeder which in turn could be utilized by higher organisms. Along these lines, I have forwarded the material to Dr. Michael Hartman, Professor, Savannah State College, for his input. Dr. Hartman who has had extensive experience with a wide variety of aquaculture systems, both here and at the University of Delaware, is probably the best suited to evaluate any possible utilization of this product in relationship to aquaculture.

If I can be of further assistance on matters relating to crustacean aquaculture in the future, please don't hesitate to write.

Sincerely,

Douglas E. Conklin

Douglas E. Conklin
Associate Director

DEC:ta
cc: M.C. Hartman

SAVANNAH STATE COLLEGE
STATE COLLEGE BRANCH
SAVANNAH, GEORGIA

DIVISION OF
NATURAL SCIENCES

October 9, 1978

Mr. Michael A. Caponigro
SCS Engineers
4014 Long Beach Blvd.
Long Beach, California 90807

Dear Mr. Caponigro:

Dr. Conklin, a past associate of mine, forwarded your material to me. After reading over it carefully, I'm afarid that there would not be too much use for the waste molasses slops in an aquaculture foodchains. My evaluation is based on several factors: The BOD and COD are very high, (table 4, p.44) indicating that the material is very high in organic carbon compounds. This is further substaniated by the high carbohydrate content mentioned in a later part of the report. These compunds being very water souble enhance the growth of Hetertrophic bacteria which, besides creating a situation of lower dissolved oxygen, they can destroy the bacterial flora of a biological filter system should such a system be in use.

Table 4 (p. 45) gives a Mg/L figure for copper as ranging from 2.0-124 with 32.8 as the mean. A concentration this high would be toxic to most shellfish, and acutely toxic to the larval stages. To introduce this material into an aquaculture foodchain, should it be taken up, would further concentrate the heavy metals.

Sincerely,

Michael C. Hartman

Michael Hartman, Ph.D.
Assistance Professor
Department of Biology

MH/ls

APPENDIX B

Anamet Plants

REFERENCE LIST

Anamet plants under operation:

Swedish Sugar Company
Ortofta Factory

24100 ESLOV - SWEDEN

Capacity	20 ton BOD_5/day
Reduction	98% BOD_5
Construction year	1972

Attention: Plant Manager Per Schmidt

Swedish Sugar Company
Hasslarps Factory

Capacity	10 ton BOD_5/day
Reduction	95% BOD_5
Construction year	1972

Swedish Sugar Company
Karpalund Factory

Capacity	4.5 ton BOD_5/day
Reduction	99% BOD_5
Construction year	1975

Swedish Sugar Company
Jordberga Factory

Capacity	10 ton BOD_5/day
Reduction	98% BOD_5
Construction year	1975

REFERENCE LIST (CONTINUED)

AB Skanebrannerier (Potato Distillery)
Gards Factory

Capacity	2 ton BOD_5/day
Reduction	99% BOD_5
Construction year	1977

ADDRESS LIST

Swedish Sugar Company
Ortofta sockerbruk
241 00 ESLOV - Sweden
Attention: Plant manager Per Schmidt

Swedish Sugar Company
Hasslarps sockerbruk
260 39 Hasslarp Sweden
Attention: Plant manager Sven Idoff

Swedish Sugar Company
Karpalunds sockerbruk
29100 Kristianstad Sweden
Attention: Plant manager Lennart Rantzow

Swedish Sugar Company
Jordberga sockerbruk
230 20 Klagstorp Sweden
Attention: Plant manager Bengt Lundborg

AB Skanebrannerier
Box 89
291 01 Kristianstad Sweden
Attention: Managing director Karl - Axel Kornell

ANAMET PLANTS UNDER CONSTRUCTION IN U.S.

American Crystal Sugar Company
Moorhead, Minnesota

Capacity	19 ton BOD_5/day
Reduction	95% BOD_5
Contact:	Mr. Ira Fordyce

ANAMET PILOT PLANT TEST SITES

Universal Foods Corporation
Red Star Yeast Operations
Belle Chasse, LA
Application: Bakers yeast waste
Contact: Mr. James L. Martin

Puerto Rico Distillers Inc.
Arecibo, Puerto Rico
Application: Rum distillery waste
Contact: Mr. Raul Ramirez

Talpe - Star Foods
Kotemark, Belgium
Application: Vegetable canning waste
Contact: Mr. Joseph Talpe

Tirlemont Distillery
Ruisbruek, Belgium
Application: Molasses distillery waste

Fruit Brandy Distillery
Sewen, Switzerland