EPA-R2-72-069
NOVEMBER 1972

ENVIRONMENTAL PROTECTION TECHNOLOGY SERIES

Oxidation of Pyrites in Chlorinated Solvents

Office of Research and Monitoring
U.S. Environmental Protection Agency
Washington, D.C. 20460

RESEARCH REPORTING SERIES

Research reports of the Office of Research and Monitoring, Environmental Protection Agency, have been grouped into five series. These five broad categories were established to facilitate further development and application of environmental technology. Elimination of traditional grouping was consciously planned to foster technology transfer and a maximum interface in related fields. The five series are:

1. Environmental Health Effects Research
2. Environmental Protection Technology
3. Ecological Research
4. Environmental Monitoring
5. Socioeconomic Environmental Studies

This report has been assigned to the ENVIRONMENTAL PROTECTION TECHNOLOGY series. This series describes research performed to develop and demonstrate instrumentation, equipment and methodology to repair or prevent environmental degradation from point and non-point sources of pollution. This work provides the new or improved technology required for the control and treatment of pollution sources to meet environmental quality standards.

EPA-R2-72-069
November 1972

OXIDATION OF PYRITES IN CHLORINATED SOLVENTS

By

Joseph C. Troy
Joseph A. Boros
Donald R. Brenneman

Contract No. 14-12-897
Project 14010 FMM

Project Officer

Dr. James M. Shackelford
Pollution Control Analysis Branch
Environmental Protection Agency
Washington, D.C. 20460

Prepared for

OFFICE OF RESEARCH AND MONITORING
U.S. ENVIRONMENTAL PROTECTION AGENCY
WASHINGTON, D.C. 20460

For sale by the Superintendent of Documents, U.S. Government Printing Office, Washington, D.C. 20402 - Price $1.00

EPA Review Notice

This report has been reviewed by the Environmental Protection Agency and approved for publication. Approval does not signify that the contents necessarily reflect the views and policies of the Environmental Protection Agency, nor does mention of trade names or commercial products constitute endorsement or recommendation for use.

ABSTRACT

The purpose of this study was to develop methods for extracting sulfur and iron compounds from pyritic waste materials, producing a final refuse that is incapable of causing water pollution, and at the same time, conserving useful mineral resources. The primary method under investigation was the chlorination of pyrites in non-aqueous solvents.

An attractive feature of the proposed method was its cyclic nature. Chlorine would serve as the original driving force for the expected reactions, but would be replaced as primary oxidant by two products of the chlorination reaction, ferric chloride and sulfur dichloride.

Test results indicated that the successful extraction of sulfur and iron compounds depended upon the continuous addition of chlorine gas to the system. The expected replacement of chlorine by ferric chloride and sulfur dichloride was not achieved under conditions of this study. The reaction rates with chlorine gas varied with the particle size and source of the pyritic material; with the choice of solvent; and with the means of providing intimate contact between pyrites and chlorine-saturated solvents. Recycling solvents through beds of pyrite significantly improved rates of reaction, while elevated temperatures and treatment in the presence of ultra-violet radiation yielded slight improvements in reaction rate. This report contains 20 references.

This report was submitted in fulfillment of Contract No. 14-12-897 under the sponsorship of the Water Quality Office, Environmental Protection Agency.

CONTENTS

Section		Page
I	Conclusions	1
II	Recommendations	3
III	Introduction	5
IV	Description of Test Apparatus and Procedures	9
V	Results - Unchlorinated Solvents	19
VI	Results - Chlorinated Solvents	21
VII	Recycling of Solvents	25
VIII	Other Pyrite Decomposition Tests	45
IX	Acknowledgements	49
X	References	51

FIGURES

No.		Page
1	Flow Diagram - Cyclical Process	7
2	Plastic Reaction Cell	11
3	Solvent Recycle System	12
4	Glass Reaction Cell (Modified)	13
5	Apparatus for In-Situ Reactions with Oxygen	14
6	Recycle Tests Using Benzene	26
7	Recycle Tests Using Carbon Tetrachloride	27
8	Recycle Tests Using Chloroform	28
9	Recycle Tests Using 1,2 Dichloroethane	29
10	Recycle Tests Using Dimethylformamide	30
11	Recovery of Iron Using Chlorinated Methanol	36

TABLES

Nos.		Page
1	Comparison of Pyritic Materials	16
2	Unchlorinated Solvents	20
3	Chlorinated Solvents	22
4	Four-Hour Recycle Tests	31
5	Long-Term Recycle Run Using Chlorinated Methanol	33
6	Long-Term Recycle Run Using Chlorinated Methanol with Electrolysis	35
7	Four-Hour Recycle Runs Using Chlorinated Solvent Combinations	38
8	Four-Hour Recycle Runs at Elevated Temperatures	39
9	Four-Hour Recycle Runs Under Ultra-Violet Radiation	41
10	Four-Hour Recycle Runs from Different Sources and Sizes of Pyrite	43
11	Solubility of Pyrites in Chlorinated Solvents with Abrasion	46

SECTION I

CONCLUSIONS

1. Decomposition of pyrites in chlorinated solvents is a possible means for converting certain solid wastes from mining operations into usable sulfur and iron products. Rates of reactions causing such decomposition are adversely influenced by a variety of factors, including the deposition of solid reaction products on unreacted pyrite surfaces.

2. The organic solvents tested showed varying tendencies to sustain reaction rates, due to differences in their ability to dissolve the reaction products.

3. Pyritic materials from different sources varied in their susceptibility to decomposition by chlorinated solvents.

4. Reaction rates were significantly improved by recycling chlorinated solvents through the pyritic mass.

5. Reaction rates were moderately improved by vigorous abrasion of pyrite particles, thus continuously exposing fresh surfaces to the chlorinated solvents.

6. Reaction rates were slightly improved under ultra-violet radiation, and at temperatures higher than ambient.

7. All successful attempts at decomposition of pyrites depended upon the continuous addition of chlorine to the system. The desired reaction utilizing the ferric chloride produced by the initial chlorination of pyrites as the oxidant for continuing decomposition was not achieved under conditions of this test. A continuous chlorine consumption of this magnitude would place severe economic limitations upon use of this process.

8. No measurable oxidation of pyrites or reaction products was achieved using oxygen or air in non-aqueous solutions, even under oxygen partial pressures exceeding one atmosphere.

SECTION II

RECOMMENDATIONS

Further study of the basic reactions involved in pyrite decomposition is required. In particular, secondary reactions wherein ferric and sulfur chlorides are utilized as oxidants must be optimized. Otherwise, the continuous chlorine demand of the system will render such treatment techniques undesirable from an economic standpoint.

A system for classifying pyritic material according to its susceptibility to decomposition by chlorination, oxidation, acidification, or any other treatment method should be developed. The parameters that cause one pyrite to react while a similar pyrite is nearly inert should be defined.

Improved means for applying metallurgical techniques to the pyrite problem should be devised. These need not necessarily require smelting at high temperatures. Pressure leaching at temperatures between 125 and 210°C has proved successful.

SECTION III

INTRODUCTION

Whenever coal is removed from the earth, whether by surface mining or deep mining, it is a necessary and common practice to separate unwanted materials from the coal. These materials--shale, clay, pyrite, earth, coal fines, etc.--are found in reject piles near most coal washeries, crushing and screening stations and power plants, in addition to active and abandoned coal mines throughout Appalachia. The total weight of refuse associated with bituminous and anthracite coal mining throughout the United States is estimated in the billions of tons.

Such waste materials, on exposure to air, often ignite spontaneously, causing serious pollution of the atmosphere with noxious fumes of sulfur dioxide. Even in the absence of combustion, exposure of these refuse piles to air and rainfall over long periods of time leads to reactions which generate iron sulfates and sulfuric acid in the drainage from such areas. The poor quality of this run-off leads to contamination of receiving streams in precisely the same manner as acid mine drainage.

Processes have been proposed to recover coal fines from refuse piles as a means of eliminating the hazard of spontaneous combustion. This reprocessing produces a final refuse enriched in pyrites. If additional treatment methods were found which could extract usable sulfur and iron compounds from pyrite, a final refuse could be produced that is neither combustible nor capable of causing water pollution, and at the same time, the conservation of mineral resources could be enhanced. The chlorination of pyrites in organic solvents is proposed as the possible means for recovery of sulfur and iron compounds.

The chlorination of pyrite in chlorinated carbon tetrachloride or dichloroethane was reported by McElroy and Peters[1] in 1968. They found that iron pyrite reacts with chlorine dissolved in either solvent to produce ferric chloride and sulfur dichloride at ambient temperatures according to the following reaction:

$$2FeS_2 + 7Cl_2 \xrightarrow{CCl_4} 2FeCl_3 + 4SCl_2 \qquad (1)$$

Both products of this initial reaction may in turn be used as reactants with additional pyrites to produce ferrous chloride and elemental sulfur as follows:

$$FeS_2 + 2FeCl_3 \xrightarrow{CCl_4} 3FeCl_2 + 2S^\circ \qquad (2)$$

$$FeS_2 + SCl_2 \xrightarrow{CCl_4} FeCl_2 + 3S^\circ \qquad (3)$$

The overall reaction of importance may be summarized as follows:

$$FeS_2 + Cl_2 \longrightarrow FeCl_2 + 2S^\circ \quad (4)$$

The continuance of reaction (2) depends upon the successful oxidation of some of the $FeCl_2$ produced in reaction (4) back to $FeCl_3$ according to the following reaction:

$$12FeCl_2 + 3O_2 \longrightarrow 8FeCl_3 + 2Fe_2O_3 \quad (5)$$

Reaction (5) is critical from the standpoint of economics. If the ferrous chloride generated by the other reactions can be converted to ferric chloride and ferric oxide, this ferric chloride may be recycled as in reaction (2). The overall reaction using (2) and (5) eliminates the use of chlorine except as a starter to produce a sufficient inventory of $FeCl_3$ required for reaction (2). In this way a cyclical process (Figure 1) can be set up whereby pyrites will be reacted in a non-aqueous media with ferric chloride and sulfur dichloride, producing elemental sulfur for separation as a solid or slurry, and ferrous chloride for recycling. The ferrous chloride produce may be oxidized to yield iron oxides for separation as solids, and ferric chloride for further reaction with additional pyrites. Overall, if reactions (2) through (5) prove feasible, the entire cyclical process can be summarized by the following combined reaction:

$$4FeS_2 + 3O_2 \longrightarrow 2Fe_2O_3 + 8S^\circ \quad (6)$$

From reaction (6) it may be inferred that one (1) ton of oxygen may be reacted with five (5) tons of pyrite to produce 3.33 tons of iron oxide and 2.67 tons of sulfur.

This study was designed to provide information on the above reactions to determine their usefulness as a means for recovery of sulfur and iron compounds from coal mining refuse material. Key questions to be answered include:

1. The solubilities of the principal reactants and reaction products in selected chlorinated solvents at ambient and elevated temperatures.

2. The effect on rates of reaction achieved by:
   a. Using other non-aqueous organic solvent.
   b. Using pyrites from different sources.
   c. Using pyrites of various sizes and surface areas.
   d. Using elevated temperatures (up to the solvent's boiling point).
   e. Using ultra-violet radiation.
   f. Using pure oxygen or air as the oxidant for ferrous chloride.

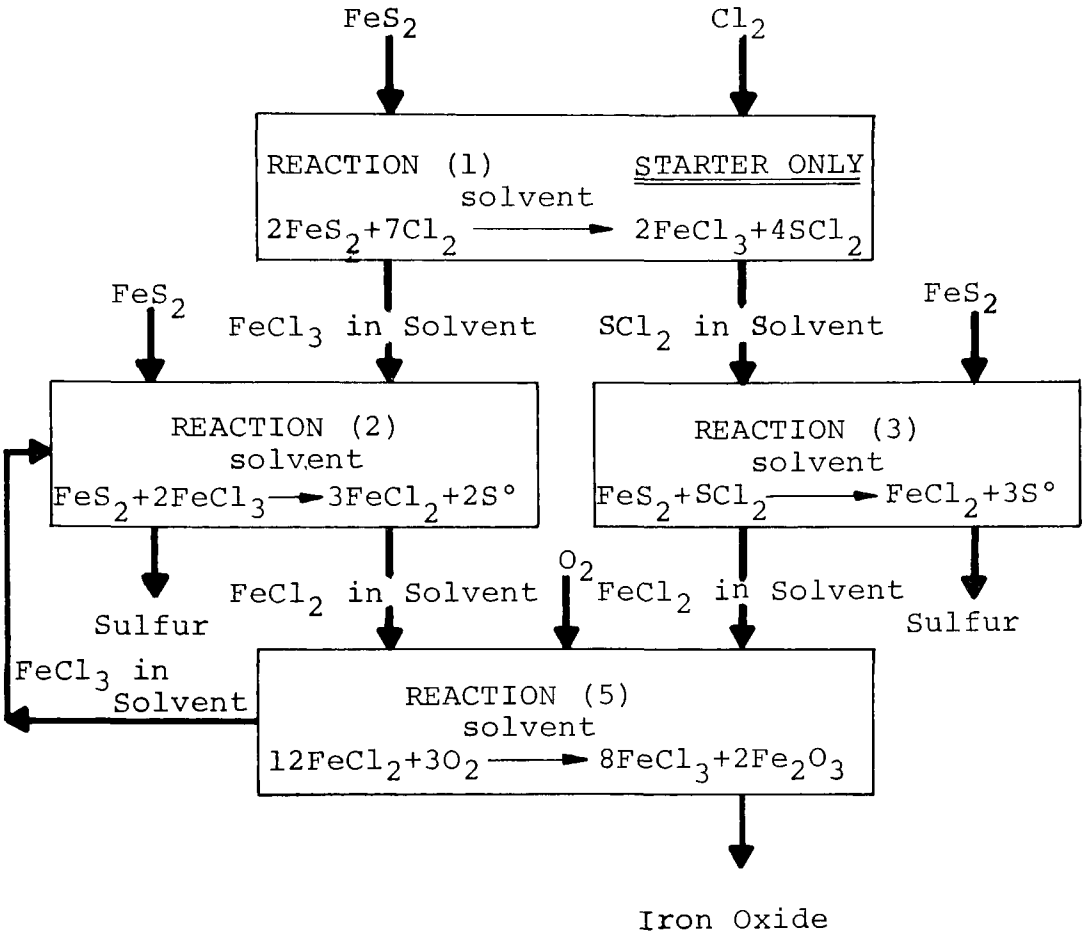

FLOW DIAGRAM — CYCLICAL PROCESS

FIGURE NO. 1

SECTION IV

DESCRIPTION OF TEST APPARATUS AND PROCEDURES

Efforts to convert pyrites to usable forms of iron and sulfur were limited to a series of bench scale tests in appropriate laboratory glassware. The solubility measurements were made by adding excess amounts of each reactant and reaction product to separate portions of solvent in a constant temperature bath. The bath temperature was raised slightly then allowed to fall back to equilibrium at 25°C and at selected higher temperatures, depending on the solvent. Constant stirring was maintained throughout a 24-hour period. Aliquots were withdrawn at the end of this time, and analyzed for dissolved matter by evaporating the solvent. Additional analytical tests were performed on residues after evaporation to determine iron or sulfur content where applicable.

The preliminary reaction, equation (1), between pyrite and chlorine in non-aqueous solvents was evaluated by sparging chlorine gas through a fine suspension of 200 mesh pyrite in solvent. After 24 hours, aliquot portions were withdrawn, filtered and analyzed for iron and sulfur in the residues after evaporation of the solvents. The presence of either or both elements in the filtered solvent was taken as an indication that reaction (1) or some similar reaction involving the decomposition of pyrites had actually occurred. The pyrites remaining in suspension were allowed to settle to the bottom of the reaction vessel. The excess solvent was transferred to polyethylene containers. Within hours, some specimens exhibited vapor pressures greatly exceeding those expected from any entrapped solvents alone. Upon visual examination these pyrites were exuding a fuming vapor with the characteristic odor and color of sulfur dichloride, one of the reaction products reported by McElroy and Peters. Although this finding is encouraging from the standpoint of confirming the success of reaction (1), the fact that the sulfur dichloride tended to remain on the pyrite surfaces may indicate problems in effecting the transfer of the reaction products from the sites where they form.

Since this transport problem arose early in the test program, it was decided that some form of recycle system for bringing chlorinated solvents to the reaction site, and for carrying away the products of reaction had to be provided. A first effort involved the use of a peristaltic

pump and an acrylic reaction chamber with return lines carrying solvent back to a reservoir. In the event that later tests utilizing electrolysis proved beneficial, a cover with permanently mounted electrode pairs was added to the reaction cell. Figure 2 shows a sketch of the original cell. Solvent was pumped through the pyrite bed at 100 ml/minute, collected in the reservoir, then pumped through the cell again. In this manner, any beneficial effects from $FeCl_3$ or SCl_2 formed by the initial chlorination of pyrites would be utilized by recycling.

Although this system as designed worked well with certain solvents, e.g., CCl_4, the plastic parts deteriorated rapidly in the presence of other chlorine-saturated solvents. Also, the tubing in the peristaltic pump had poor life expectancies, sometimes rupturing at the flexing point during relatively short recycle runs. For these reasons, the entire recycle system was modified as shown in Figures 3 and 4. The plastic reaction cell was replaced with a 1" I.D. x 6" long heavy-walled glass tube with polypropylene end caps. The peristaltic pump was replaced by a reversible motor operating a traveling reservoir to provide gravity flow of solvents through the pyrite bed in the reaction cell. The motor was operated at a rate of speed which caused solvent to flow through the cell at 100 ml/minute. This apparatus functioned well through the remainder of the tests, requiring only periodic replacement of the flexible tubing connecting the traveling reservoir to the reaction cell. Elevated temperatures were attained by wrapping a heating tape around the reaction cell. A polypropylene adaptor was designed to accomodate an ultraviolet lamp for use during that phase of testing. In all recycle tests, the objective was to measure the weight loss of pyrites during the test run, and to determine iron and sulfur concentrations from aliquots of the recycling solvents as the test progressed.

The in-situ oxidation of pyrites using pure O_2 was studied in a 1000 ml reaction flask fitted for gas-tight operation as shown in Figure 5. The flask was equipped with a stirrer and with inlet ports to admit pyrite, chlorinated solvents and oxygen under constant pressure. An initial gas pressure of 0.433 PSI (12 inches of water) was used for most tests. The objective was to monitor the utilization of oxygen in terms of volumetric displacement and pressure changes.

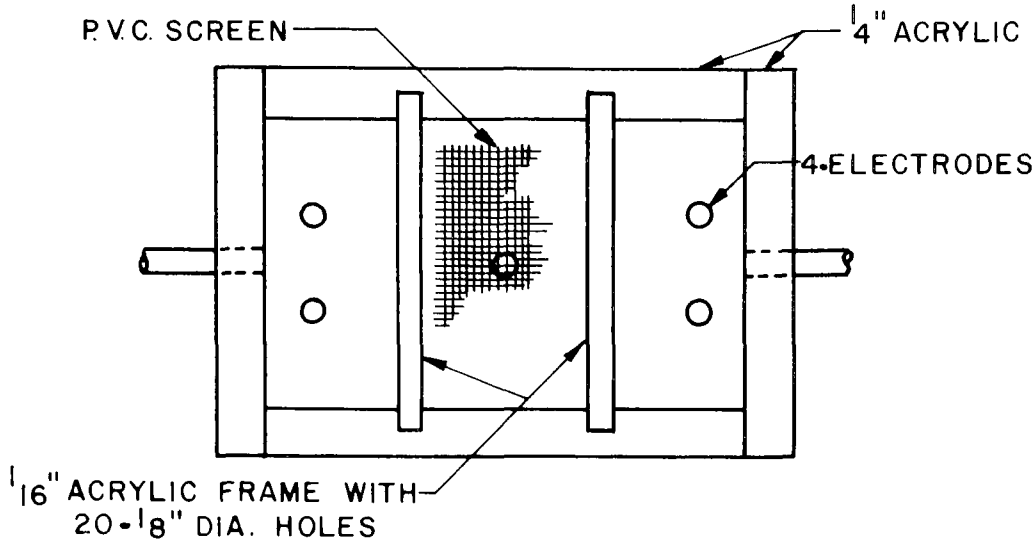

SECTION-AA

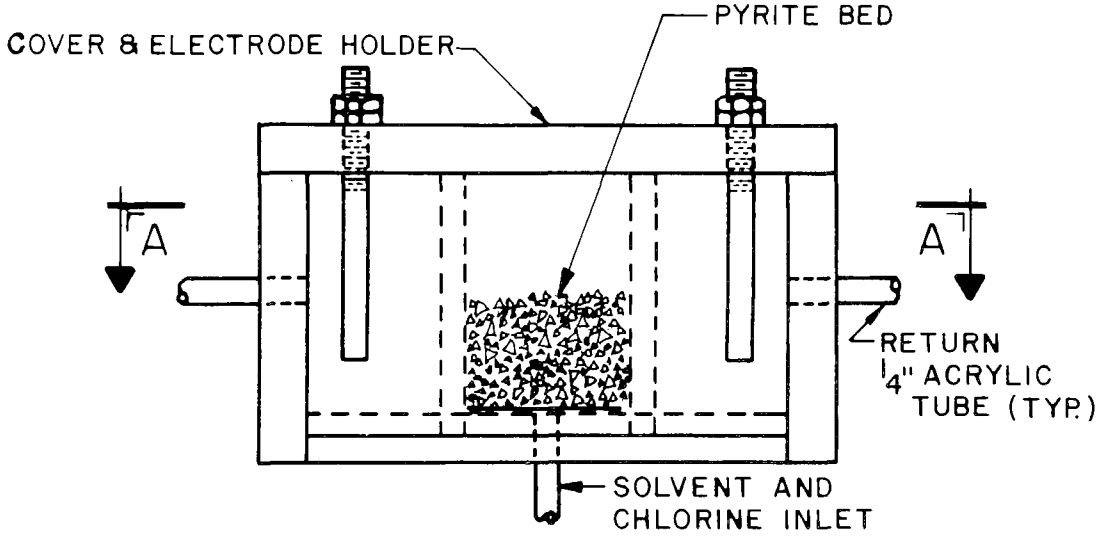

PLASTIC REACTION CELL

FIGURE NO. 2

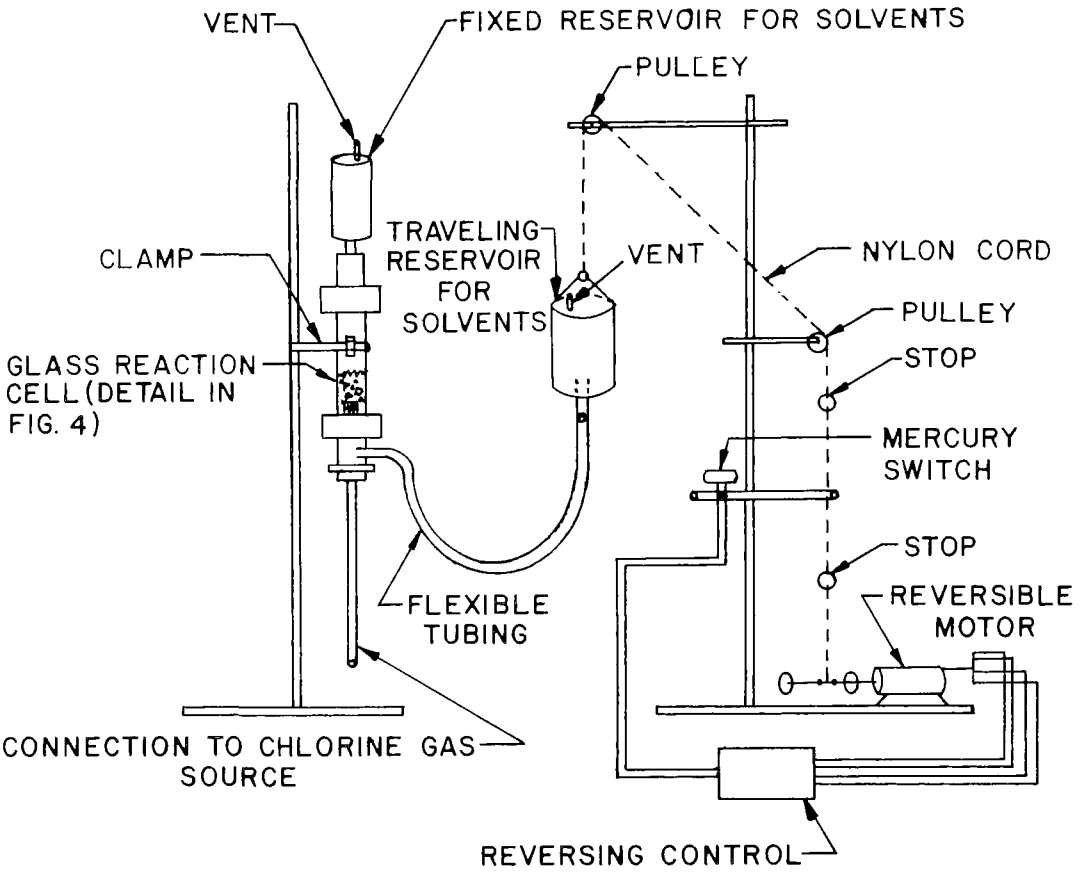

SOLVENT RECYCLE SYSTEM

FIGURE NO. 3

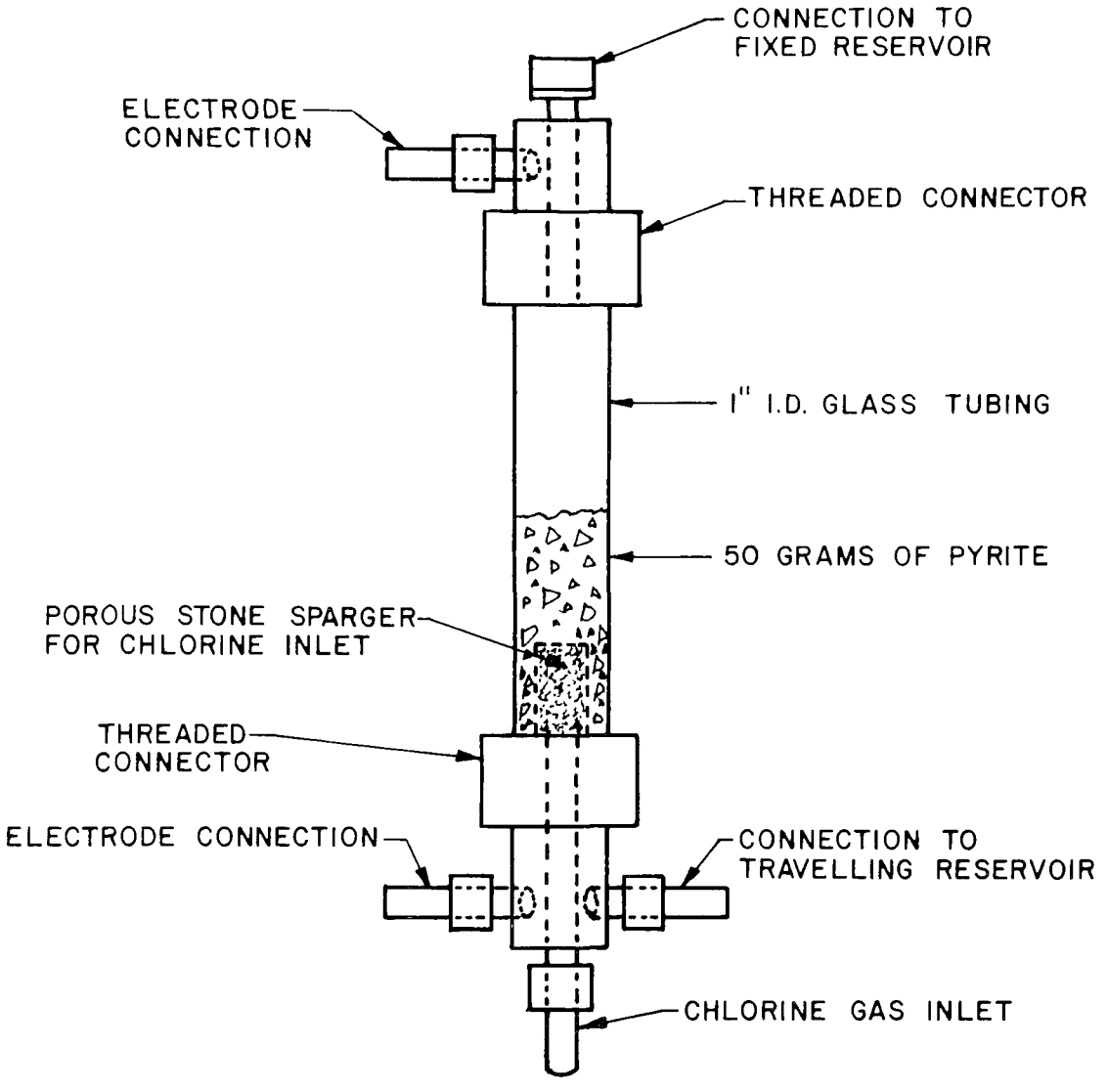

GLASS REACTION CELL (MODIFIED)

FIGURE NO. 4

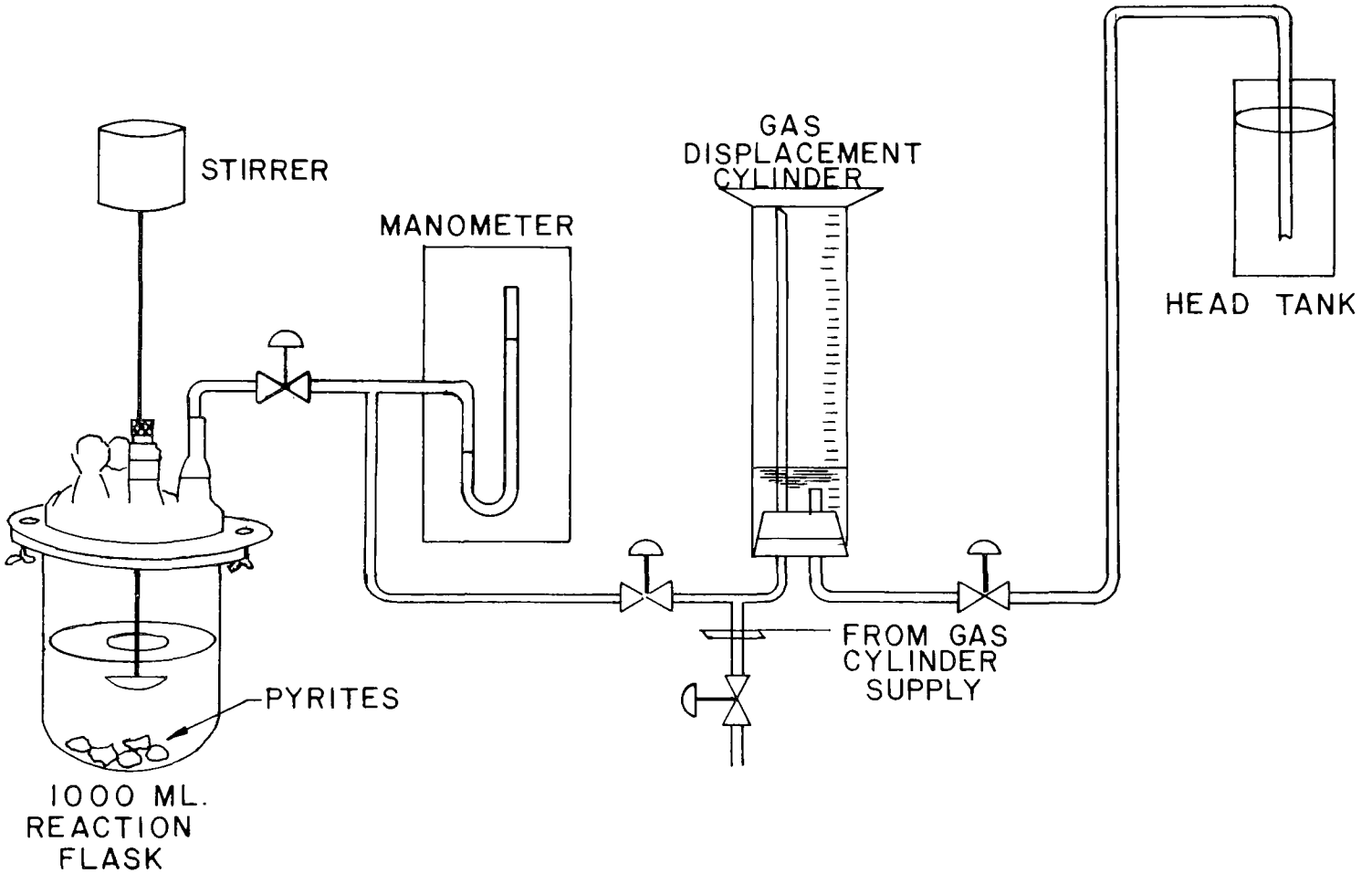

APPARATUS FOR IN-SITU REACTIONS WITH OXYGEN
FIGURE NO. 5

Analytical Procedures Used to Identify Products

No satisfactory procedure for analyzing the iron or sulfur reaction products directly in aliquots of the chlorine saturated solvents was found. Each determination was made on residues after evaporation of the solvents, with the attendant possibility of changes in the oxidation state. For this reason, most determinations were reported as total iron and total sulfur. Iron was measured either using the 0 - phenanthroline colorimetric method [2] or the atomic absorption technique [3] after extraction of the dried residue with hot hydrochloric acid. Sulfate was found using the turbidimetric method [2]. Elemental sulfur in residues was identified by a technique described by Gyenes[4] and by Kucharsky and Safarik[5]. This latter method is less well-known, so it is described in more detail. Extract the sample in a vibrator with 80 ml of benzene for one hour. Filter the solution into a 100 ml volumetric flask. Dilute to the mark with acetone. Mix 20 ml of diluted sample with 1 ml of water and 3 drops of bromothymol blue indicator. Titrate with 0.05 M KCN solution in isopropanol, taking care to maintain a temperature of 50 - 60°C throughout the titration. The end-point is attained when a blue color persists. Warm the sample and if the color changes from blue to yellow, add titrant until the color change is permanent. The KCN solution is originally standardized against a pure elemental sulfur solution containing 1.6033g of purified, dried sulfur in 800 ml of benzene, then diluted to 1 - liter with acetone. The same titration procedure is used as in determining the unknown sulfur concentration.

The analyses on solid pyrite samples, both before and after reaction with chlorine-saturated solvents, were performed using x-ray spectrographic methods for determining elemental compositions and x-ray diffraction to identify crystalline structures. Surface area measurements for selected pyrite specimens were performed by the Materials Analysis Laboratory of Micromeritics Instruments Corporation, following the standard multipoint B.E.T. technique [6] using krypton gas adsorption on an Orr surface area pore-volume analyzer.

The pyrites chosen for these tests were obtained from two sources: coal pyrites from the Shawville Power Station of the Pennsylvania Electric Company near Clearfield, Pennsylvania; and pyrite concentrate from the Metal Mining Division of Kennecott Copper Corporation's concentrate plant near Salt Lake City, Utah. The Shawville Coal pyrite showed a weathered appearance and fragile structure, and was brought to the surface at least two years ago. The Utah pyrite concentrate, on the other hand, was smooth and hard, being above ground less than two (2) months. Both samples were chemically similar, but varied considerably in physical structure. A comparison of the two pyritic materials appears in Table 1.

TABLE 1

All results in per cent, except as noted

	Shawville Coal Pyrite	Utah Pyrite Concentrate
Iron	30.8	33.6
Sulfur	31.2	36.8
Silica as SiO_2	1.1	2.0
Calcium	0.6	0.5
Magnesium	1.1	0.6
Aluminum	0.7	0.4
Copper	0.4	0.7
Crystalline Matter	40% FeS_2	70% FeS_2
Loss on Ignition	36.0	33.0
Specific Gravity	3.70	5.05
Surface Area (-60+200 mesh frac.)	$3.28 M^2$/Gram	$0.17 M^2$/Gram

Chemically, both pyrites showed minor differences, but the Utah concentrate contained nearly twice as much crystalline material as the Shawville. This difference was also reflected in the respective specific gravities, indicating that Shawville was typical of coal pyrites, where Utah was more similar to "museum-grade" pyrites. Both values agree with those reported by Clark[7], 3.2-3.4 and 5.0 for coal pyrites and "pure" pyrites respectively. Gross differences in surface areas were also cited by Clark, and by Braley[8], who reported surface areas of 4.4 and $0.4M^2$/gram for sulfur ball pyrites and "museum-grade" pyrites respectively.

SECTION V

RESULTS

Solubility Measurements - Unchlorinated Solvents

Ten grams of each solid material (ferric chloride, elemental sulfur, and Shawville pyrite) in powder form were placed in separate 400 ml Erlenmeyer flasks. The pyrites were pre-treated by soaking in 0.3N HCl overnight, rinsing 5 times with deionized water and 2 times with acetone, then drying for 4 hours at 40°C. A 150 ml portion of each solvent under test was added and the flasks were stoppered to prevent evaporation. The mixtures were shaken carefully, and maintained at a constant temperature of 28°C for 18 hours. More ferric chloride or sulfur was added as required. When no further additions of solutes could be put into solution, the temperature was allowed to fall back to 25°C and was maintained at this level for 24 hours. Continuous agitation was provided throughout the period. A 50 ml portion was withdrawn from each sample and drawn through an 0.45 micron membrane filter to remove undissolved matter. The solvent was driven off by careful evaporation in a tared distilling flask, and the residue on evaporation was weighed. A solvent blank correction was applied by carrying 50 ml portions of each pure solvent through the same procedures, then subtracting the weight of residue thus obtained, if any, from the corresponding solvent/solid mixture. Solubilities are expressed in Table 2 as grams of solute/100 grams of solvent at 25°C, following the application of appropriate factors based on each solvent's specific gravity.

TABLE 2

UNCHLORINATED SOLVENTS

Solvent	Grams of Solute/100 Grams of Solvent @ 25°C		
	$FeCl_3$	S	Shawville Pyrite
Acetone	63*	2.1*	0.061
Benzene	0.42	1.0* 0.95	0.027
Carbon Disulfide	<0.01	50* 48.8	0.018
Carbon Tetrachloride	Insoluble	0.831* 0.82	Insoluble
Chloroform	1.54	1.2* 1.23	0.019
1,2 Dichloroethane	0.29	0.66	0.019
Dimethylformamide	20	-	<0.001
Methanol	155*	0.3* 0.31	0.370
Nitrobenzene	1.70	0.09	0.007
Sulfur Monochloride	0.1	Very Soluble*	Reacts

*Data reported in various solubility tables. All other values shown were measured experimentally.

SECTION VI

RESULTS

Solubility Measurements - Chlorinated Solvents

Attempts to repeat the above experiments using chlorine-saturated solvents proved to be more difficult because:

1. Certain solvents reacted with chlorine to form different solvents or mixtures, e.g., sulfur monochloride was chlorinated to sulfur dichloride.

2. Elemental sulfur reacted with chlorine in most solvents, changing to sulfur chlorides rather than remaining in elemental form.

3. Residues on evaporation of chlorinated solvents containing excess sulfur and pyrites rarely resembled the original solutes, indicating that reactions had occurred, rather than simply reaching a solution equilibrium. Confirmation of this observation was made by repeating the measurements on pyrite/solvent mixtures two weeks after the original solubility measurements were made. Table 3 shows this comparison.

All solvents in Table 3, except carbon disulfide, and possibly dimethylformamide continued to react slowly after the 24 hour measurements were made. CS_2 and DMF reaches some sort of equilibria in 24 hours, although both solvents changed color slightly upon chlorination, even prior to the addition of pyrites. Methanol had a twelve-fold greater ability to "dissolve" pyrite in the unchlorinated stage (see Table 2), indicating a reaction between chlorine and this solvent, also. Two of the 15 day specimens, benzene and 1,2 dichloroethane, showed evidence of the formation of elemental sulfur and sulfur chlorides, products of a reaction and not a true solution. Although the quantities of elemental sulfur determined by the technique described by Gyenes[4] were very small (0.020 and 0.035 grams of sulfur/100 grams of solvent for benzene and 1,2 dichloroethane respectively), this sulfur was present as a finely-divided solid. Table 2 indicates sulfur solubilities 20 to 50 times greater than the concentrations reported. Even if one assumes that the sulfur was formed from reactions between $FeCl_3$ or SCl_2 and FeS_2 as in equations (2) and (3) after all Cl_2 was depleted, the quantities of sulfur thus formed would be expected to dissolve in the solvents. Otherwise, such reaction products could become rate-limiting by adhering to unreacted pyrite surfaces.

TABLE 3

CHLORINATED SOLVENTS

Solvent	Grams of Residue/100 Grams of Solvent @ 25°C	
	24 Hour Contact Time	15 Day Contact Time
Acetone	0.070	0.14
Benzene	0.052	0.48
Carbon Disulfide	0.036	0.036
Carbon Tetrachloride	0.074	0.22
Chloroform	0.048	0.23
1,2 Dichloroethane	0.13	0.59
Dimethylformamide	0.001	0.001
Methanol	0.03	0.11
Nitrobenzene	0.05	0.13

Since the pyrite "solubility" tests had become in fact reaction rate tests, it was decided at this point to evaluate equation (1) using <200 mesh Shawville pyrite in chlorine-saturated carbon tetrachloride. Twenty grams of pyrite fines were added to 300 ml of chlorine-saturated CCl_4 in a 1000-ml reaction flask. Chlorine gas was continuously sparged through the mixture at a rate of 15ml/minute. After 24 hours, two 100-ml portions of the solvent were withdrawn and filtered through 0.45 micron membrane filters. The filtrates were evaporated to dryness and dissolved solids concentrations were determined. The two aliquots showed good agreement at 0.1189 and 0.1196g/100 grams of solvent. These residues in turn were separately analyzed for total iron and total sulfur, following digestion in hydrochloric acid. Quantities found in this residue were 0.0146 grams of iron as Fe, and 0.048 grams of sulfur as SO_4. If the iron were present entirely in the $FeCl_3$ form, the 0.0146 grams would be equivalent to 0.0425 grams of $FeCl_3$ produced. And if all of the sulfur were present as SCl_2, the 0.048 grams as SO_4 would represent 0.0447 grams of SCl_2. From equation (1) two (2) moles of SCl_2 are produced for each mole of $FeCl_3$, and the ratio between the two theoretical products above was found to be 1.05:1, indicating that other forms of iron or sulfur are present, not simply $FeCl_3$ and SCl_2. In addition, the sum of the theoretical weights above is 0.0872 grams, leaving a weight of 0.032 grams unaccounted for in the residue on evaporation. At least, the presence of iron and sulfur compounds in the filtrate was an indication that pyrite decomposition had actually occurred.

The unreacted pyrites remaining in suspension were recovered by decanting the excess solvent, and drying in a warm air current. An attempt was made to weigh this material, but constant weight was not achieved at first. The material was transferred to a capped polyethylene bottle for storage overnight, but within a few hours the sides of the bottle bulged under a vapor pressure far in excess of that expected from either the reactants or the chlorine gas which may have permeated the porous pyrite bodies. Upon removing the bottle cap, a dark red fuming vapor with a characteristic sulfur chloride odor escaped to the air. The fact that this reaction product was not removed from the reaction site by the carbon tetrachloride raised questions about the rate-limiting capabilities of this product.

SECTION VII

RECYCLING OF SOLVENTS

At this point in the project it was decided to pursue the problem of transporting reaction products from the pyrite surfaces, and thus continually expose fresh surfaces for further reaction. One approach tested involved continuous recycling of the solvent. If product solubilities were sufficient, the flowing solvent stream would wash away the deposits and enable the reaction to continue at its maximum rate. In addition, by recycling the solvents, any benefits to be derived from the oxidation of pyrite by $FeCl_3$ or SCl_2 would simultaneously be attained. Since carbon tetrachloride showed relatively low solvating capabilities on tests performed thus far, recycle tests were run using a variety of chlorinated solvents and mixtures of solvents.

A typical test run began with an initial charge of 50.0 grams of Shawville pyrite in the glass reaction cell (Figure 4). A 500ml charge of the solvent to be tested was placed in the traveling reservoir, then forced to flow back and forth through the pyrite bed at a rate of 100ml/minute. Chlorine gas was introduced to the reaction cell via a porous stone sparger at a rate of 25-27ml/minute. At 1, 2 and 4 hours into the test, 50 ml aliquots of recycling solvent were withdrawn and analyzed for total iron concentration. The solvent volumes thus withdrawn were replaced with equivalent volumes of pure solvent. At the end of four hours, the pyrites remaining in the chamber were rinsed with pure solvent, washed with deionized water, and dried. The total weight lost by the pyrites was determined. Runs for the most promising solvents were repeated with the addition of one (1) part dimethylformanide (DMF) to nineteen (19) parts of solvent, and with this solvent pair under ultraviolet light. Graphs for four (4) hour test runs with benzene; carbon tetrachloride; chloroform; 1,2 dichloroethane; and dimethylformamide are shown in Figures 6 through 10, and four-hour pyrite weight losses for these solvents and for other, less successful runs are listed in Table 4 which follows.

The behavior of DMF was most interesting. Although a poor solvent when used alone, it improved the solvating capabilities of most organics significantly when blended in at one (1) part DMF:19 parts solvent. In the case of 1,2 Dichloroethane the pyrite decomposition rate was changed from the poorest to one of the most effective. Tests were repeated using 1:3 and 1:1 blends of DMF and 1,2 Dichloroethane, but increasing DMF concentration led to decreasing pyrite decomposition rates. The pyrite weight losses were 4.48 and 2.84 grams respectively.

RECYCLE TESTS USING BENZENE

ORIGINAL WEIGHT OF SHAWVILLE PYRITES
= 50 GRAMS

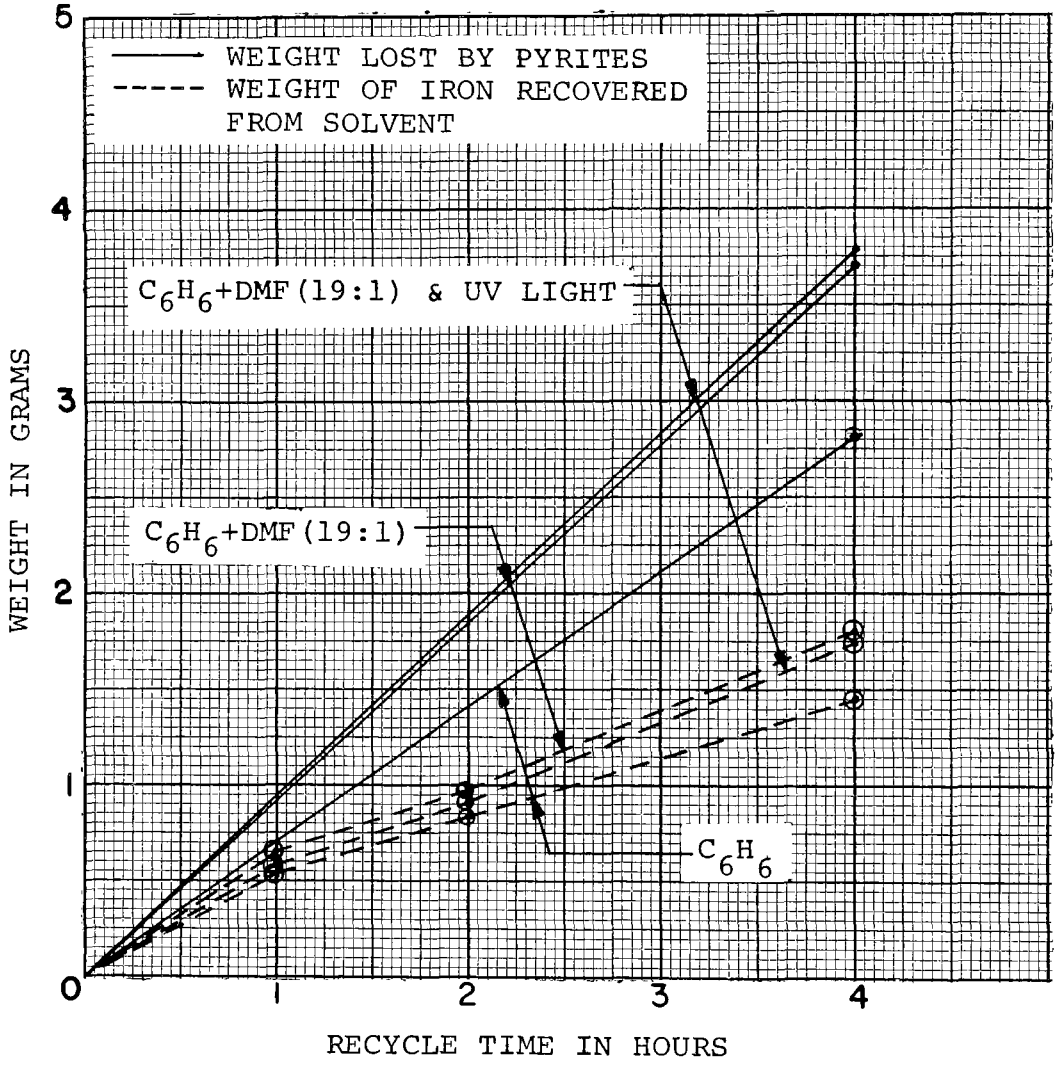

FIGURE NO. 6

RECYCLE TESTS USING CARBON TETRACHLORIDE

ORIGINAL WEIGHT OF SHAWVILLE PYRITES
= 50 GRAMS

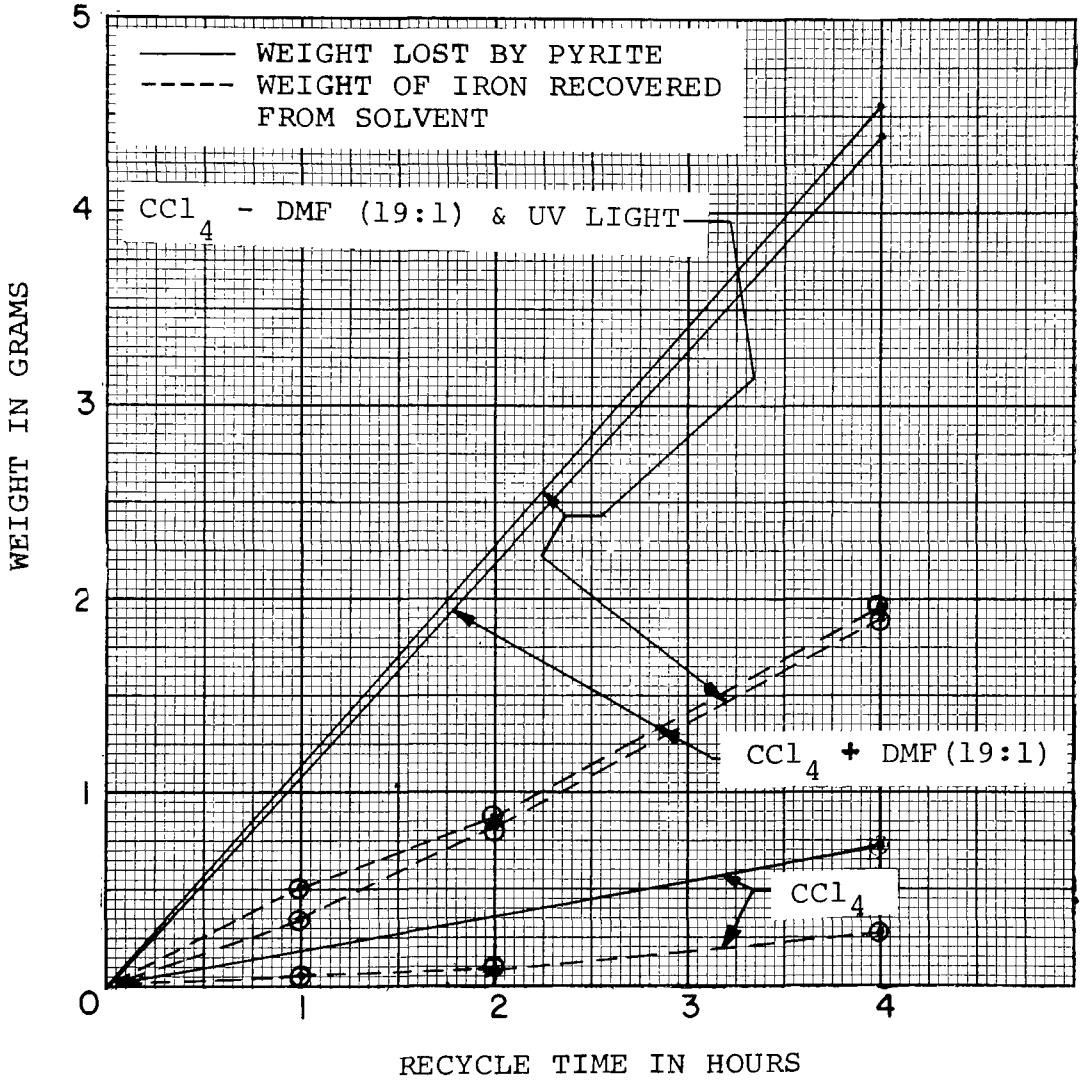

FIGURE NO. 7

RECYCLE TESTS USING CHLOROFORM

ORIGINAL WEIGHT OF SHAWVILLE PYRITES
= 50 GRAMS

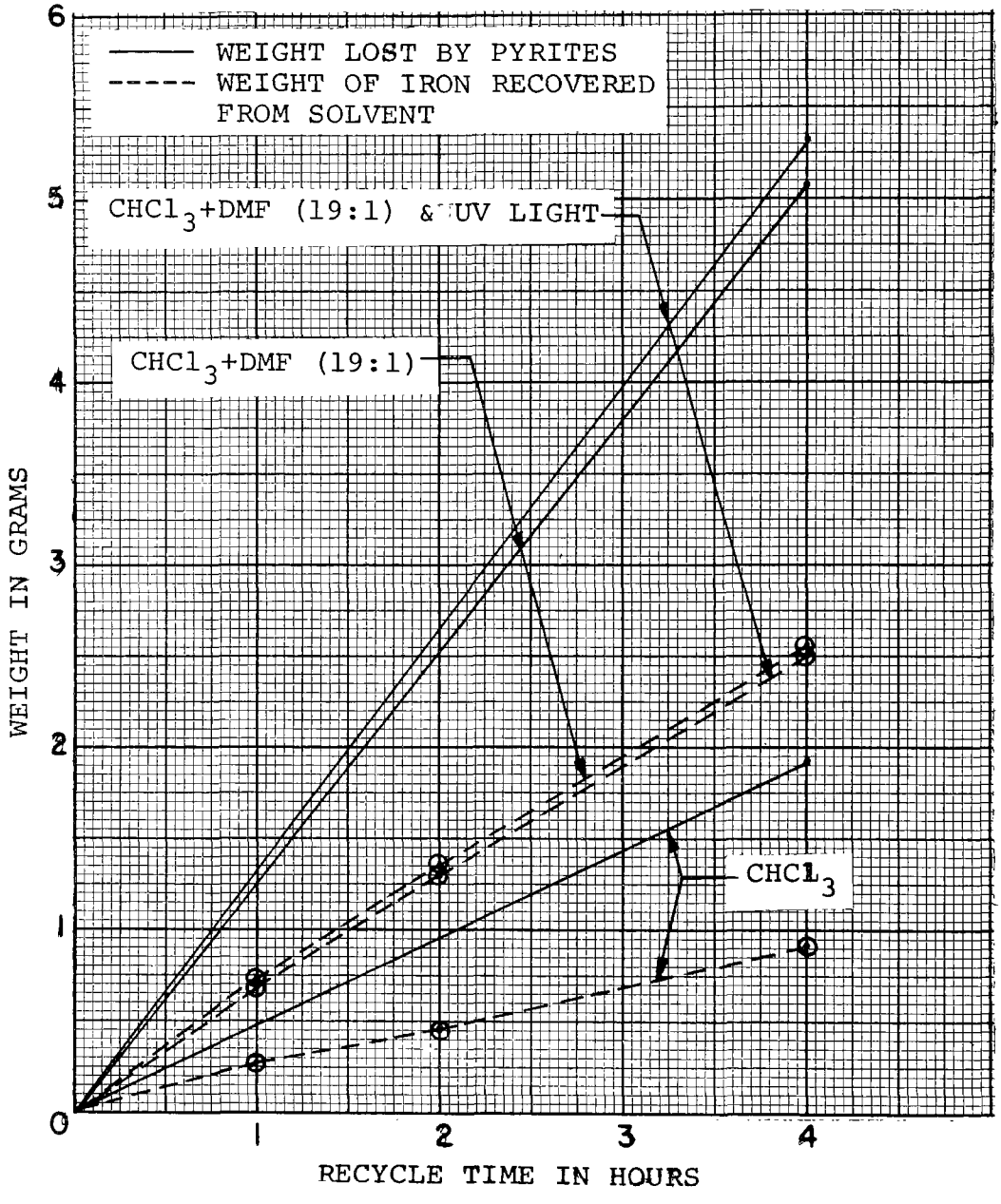

FIGURE NO. 8

RECYCLE TESTS USING 1, 2 DICHLOROETHANE

ORIGINAL WEIGHT OF SHAWVILLE PYRITES = 50 GRAMS

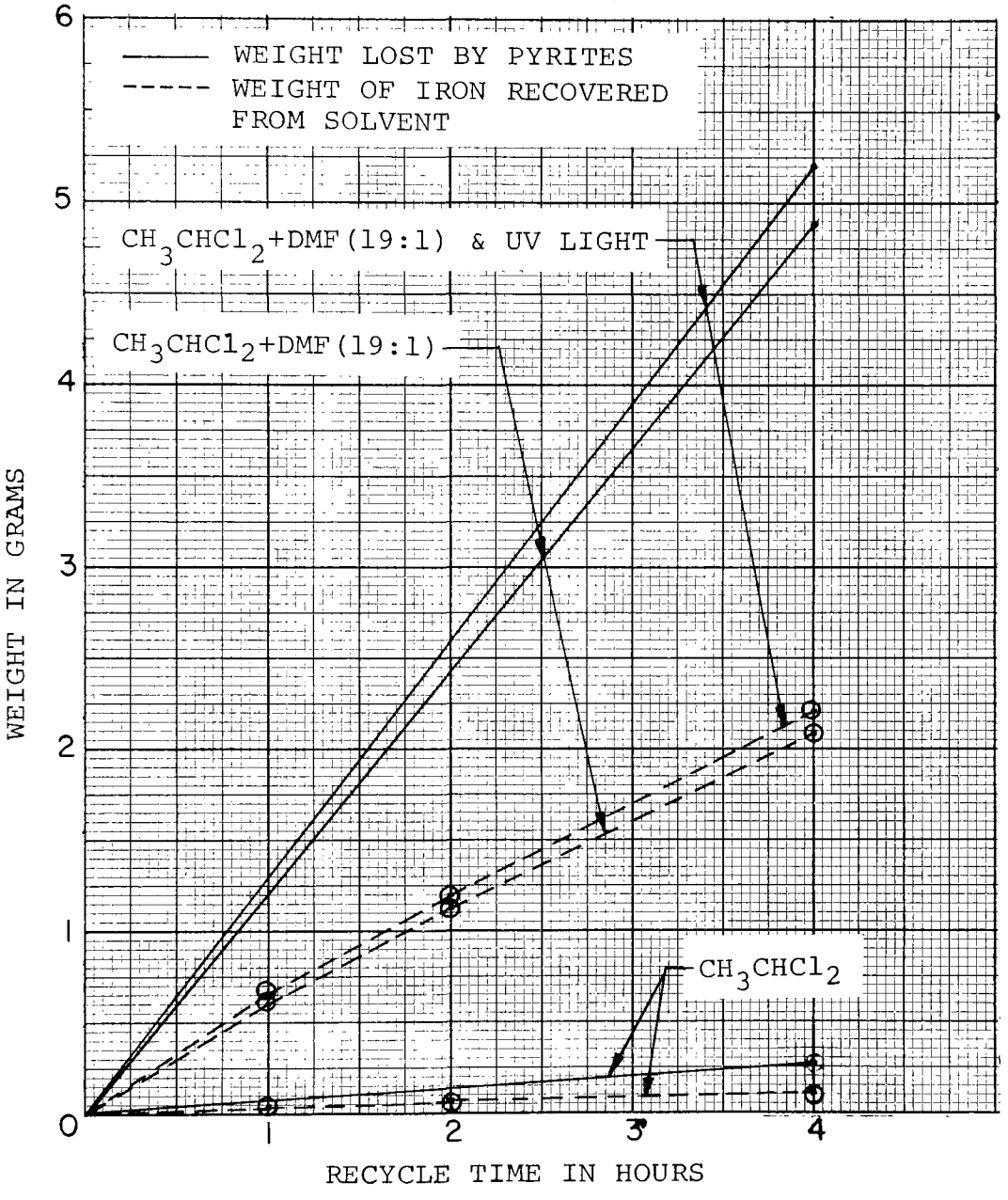

FIGURE NO. 9

RECYCLE TESTS USING DIMETHYLFORMAMIDE

ORIGINAL WEIGHT OF SHAWVILLE PYRITES
= 50 GRAMS

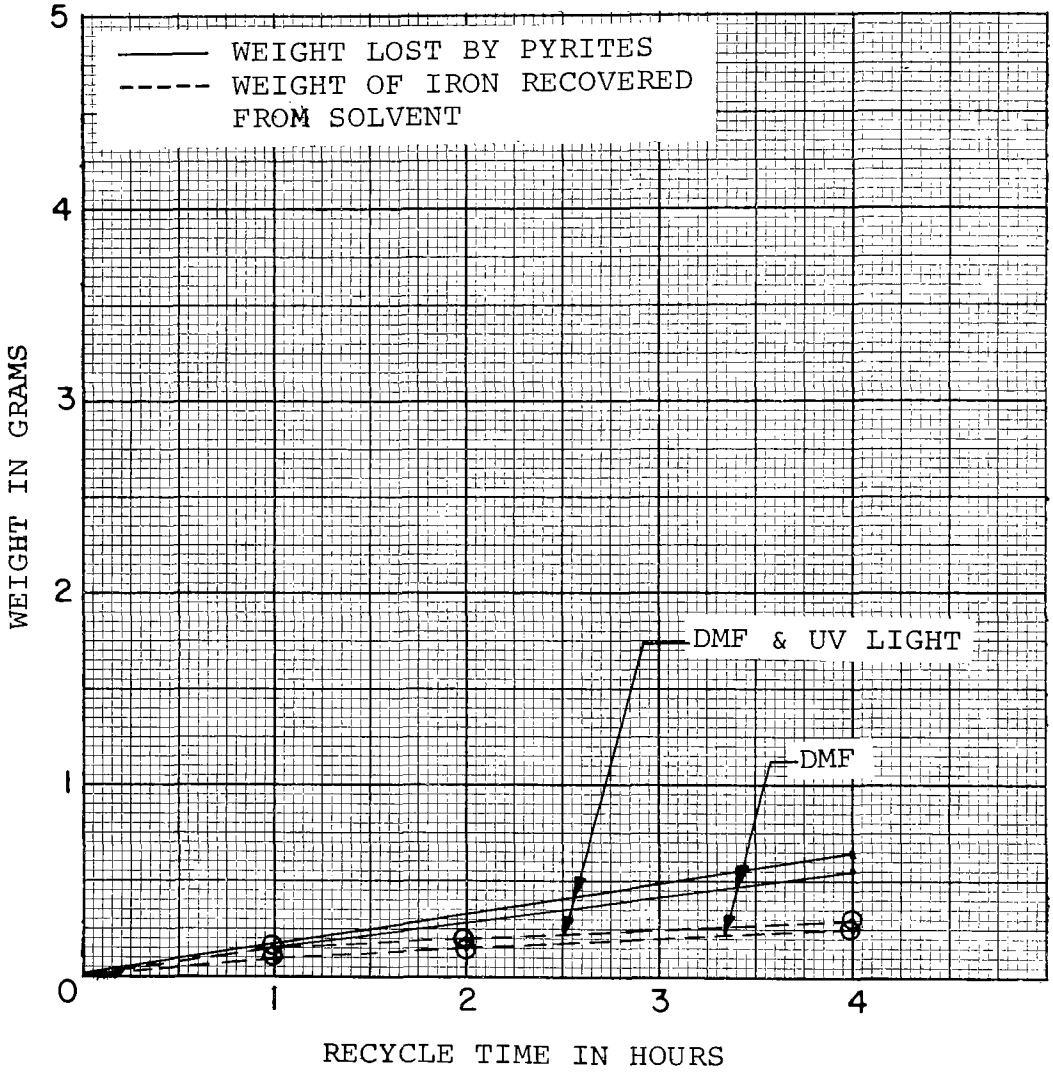

FIGURE NO. 10

TABLE 4

FOUR-HOUR RECYCLE TESTS

Shawville Pyrite Weight Loss in Grams
(original weight = 50.0 grams)

Solvent Used	Solvent Alone	Solvent + DMF 19:1	Solvent + DMF + UV Light 19:1
Benzene	2.80	3.72	3.78
Carbon Tetrachloride	0.72	4.40	4.56
Chloroform	1.92	5.08	5.32
1,2 Dichloroethane	0.28	4.88	5.20
Dimethylformamide	0.56	--	--
Methanol	3.42	0.84	--
Nitrobenzene	1.72	1.08	--

In reviewing the graphs in Figures 6 through 10, it is apparent that recovery of iron proceeds in a linear fashion, especially after the first hour of recycle. At the end of each 4-hour run, the final concentration of iron in the solvent ranged between 36 and 52% of the pyrite weight lost during that time. If all of the iron in pure FeS_2 were recovered, the iron would weigh 46.6% of the total weight. But for the Shawville pyrites used for these recycle tests the original iron content was only 30.8%. One possible explanation for this observation may involve possible weight gains by the "unreacted" pyrites weighed at the end of a run to determine weight losses. The surface area of Shawville pyrite is so great ($3.28M^2$/gram) that it is very difficult to thoroughly dry the sample. Solvents, reaction products, or moisture from exposure to air all may be entrapped and weighed as pyrites. Other approaches to monitoring the reaction rate while continuing the tests were considered. Singer[9] determined FeS_2 decomposition rates by measuring the sulfate uptake in main water, but in our tests, sulfur would be present in too many other forms. In Sato's work[10] he reported polysulfides, thiosulfates, polythionates, sulfites, and elemental sulfur in addition to the formation of sulfates as intermediate sulfur states. Sherman and Strickland[11] determined dissolution rates in acid chlorine solutions by monitoring the consumption of chlorine gas, but for our purposes, interactions between chlorine and the various solvents make this approach less usable. After considering these alternatives, it was decided to continue to use the recovery of iron as a measure of pyrite decomposition, as McKay and Halpern[12] did in their kinetic study of pyrite oxidation rates in aqueous suspensions.

Long-Term Recycle Runs

In an effort to decompose the major portion of a 50 gram Shawville pyrite mass, long-term recycle runs were attempted, using methanol as the solvent due to its ability to dissolve $FeCl_3$ readily. Other than the change in test duration, all conditions were the same as those for a typical 4-hour run, except that iron concentrations would be monitored hourly during the normal working day. Results obtained are shown in Table 5.

TABLE 5

LONG-TERM RECYCLE RUN USING CHLORINATED METHANOL

Elapsed Time in Hours	Grams of Iron in Solvent	Net Gain in Grams of Iron Within Past Hour	Overall Iron Recovery Rate Grams/Hour
1	1.1	1.1	1.1
2	2.4	1.3	1.2
3	2.9	0.5	1.1
4	3.4	0.5	0.9
5	3.8	0.4	0.8
6	4.1	0.3	0.7
7	4.4	0.3	0.6
8	4.8	0.4	0.6
9	5.2	0.4	0.6
10-24	9.3	0.3/hr. ①	0.4
25	9.4	0.1 ②	-
26	9.4	0.0 ②	-
27	9.5	0.1 ②	-
28	10.2	0.7	0.4
29	11.2	1.0	0.5
30	11.8	0.6	0.5
31	12.2	0.4	0.5
32	12.4	0.2	0.4

① Chlorine addition and recycling continued throughout the night.

② Chlorine shut-off for three (3) hours. Overall iron recovery rate based only on those hours of chlorine addition.

Original Weight of Pyrites	= 50.0 Grams
Final Weight of Pyrites	= 21.4 Grams
Net Loss in Weight	= 28.6 Grams

Since the iron content of Shawville pyrite was found to be 30.8%, there were 15.4 grams of iron available in the 50 gram sample. At the end of the 32-hour run, 12.4 grams of iron was found in the solvent, indicating an 80.6% recovery of iron, while decomposing 57.2% of the pyrite.

Another 30^+ hour recycle run was planned duplicating the earlier run, except that continuous electrolysis was provided throughout the run. In small scale tests, electrolysis tended to enhance pyrite decomposition rates for certain solvents. As it developed in this test, electrolysis inhibited the reaction considerably. After the unreacted pyrites were removed from the reaction cell at the conclusion of the test, the reason became apparent. A fine iron suspension was tightly attached to pyrite particles throughout the bed, reducing available surface areas to a fraction of their original size. Results for this test are shown in Table 6, and together with the previous run without electrolysis, are presented in graph form in Figure 11.

TABLE 6

LONG-TERM RECYCLE RUN USING CHLORINATED METHANOL WITH ELECTROLYSIS

Elapsed Time in Hours	Grams of Iron in Solvent	Net Gain in Grams of Iron Within Past Hour	Overall Iron Recovery Rate Grams/Hour
1	0.3	0.3	0.3
2	0.7	0.4	0.4
3	0.9	0.2	0.3
4	1.1	0.2	0.3
5	1.3	0.2	0.3
6	1.5	0.2	0.3
7	1.7	0.2	0.2
8	2.0	0.3	0.3
9	2.3	0.3	0.3
10-24	2.6	0.02/hr.*	- *
25	2.8	0.2	0.3
26	3.0	0.2	0.3
27	3.3	0.3	0.3
28	3.8	0.5	0.3
29	4.3	0.5	0.3
30	4.9	0.6	0.3
31	5.3	0.4	0.3
32	5.5	0.2	0.3
33	5.6	0.1	0.3

* No chlorine added overnight. Overall iron recovery rate based only on those hours of chlorine additon.

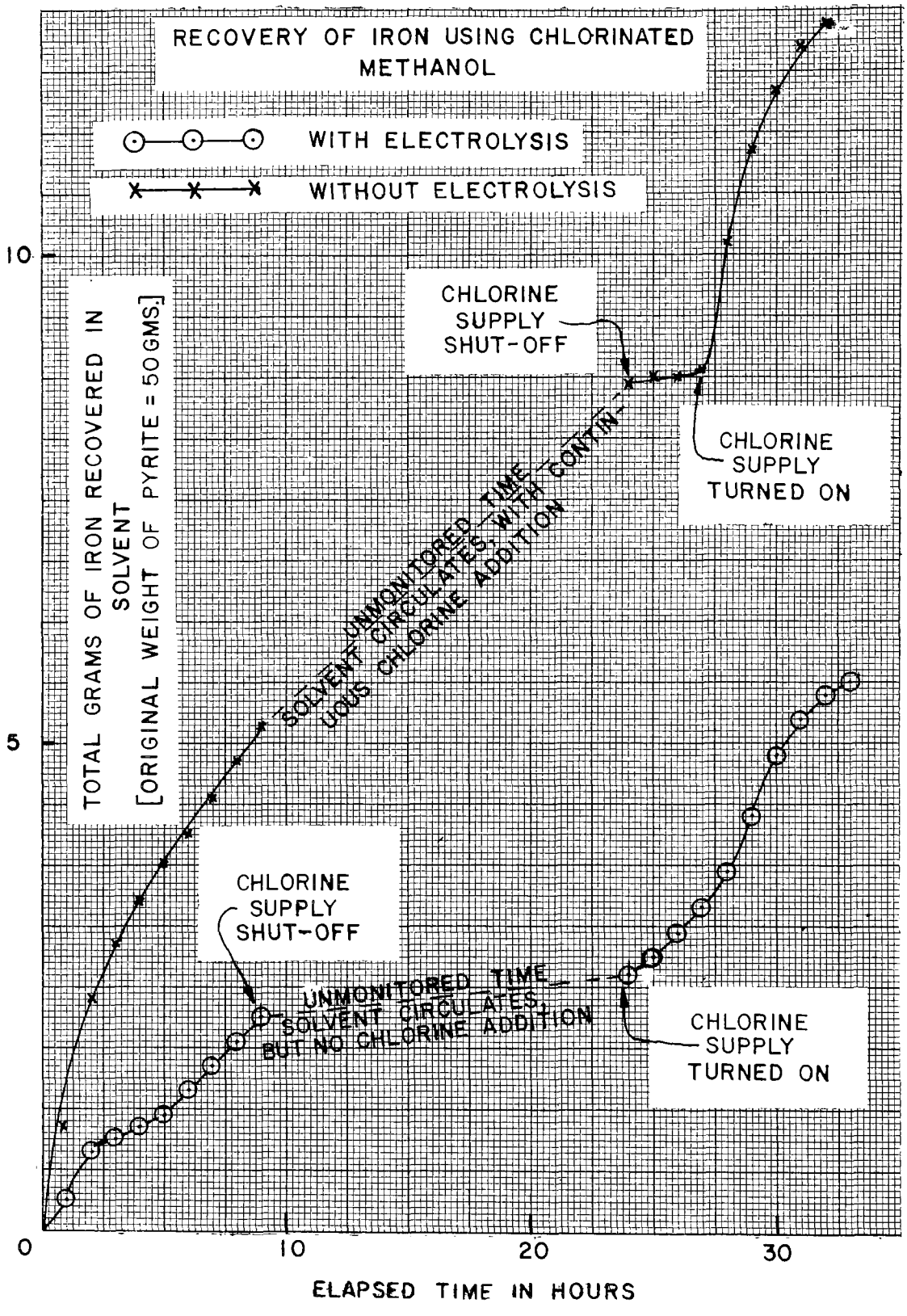
RECOVERY OF IRON USING CHLORINATED METHANOL
WITH ELECTROLYSIS
WITHOUT ELECTROLYSIS
TOTAL GRAMS OF IRON RECOVERED IN SOLVENT
[ORIGINAL WEIGHT OF PYRITE = 50 GMS.]
CHLORINE SUPPLY SHUT-OFF
CHLORINE SUPPLY TURNED ON
SOLVENT UNMONITORED TIME CIRCULATES, WITH CONTINUOUS CHLORINE ADDITION
CHLORINE SUPPLY SHUT-OFF
UNMONITORED TIME SOLVENT CIRCULATES, BUT NO CHLORINE ADDITION
CHLORINE SUPPLY TURNED ON
0
5
10
10
20
30
ELAPSED TIME IN HOURS

FIGURE NO. 11

Original Weight of Pyrites	= 50.0 Grams
Final Weight of Pyrites	= 38.6 Grams
Net Loss In Weight	= 11.4 Grams

Once again there were 15.4 grams of iron available in the 50 gram pyrite sample, but at the end of 33 hours, only 5.6 grams were recovered. Thus, iron recovery was 36.4% while pyrite decompositon decreased to 22.8%.

Both curves in Figure 11 show the effect on pyrite decomposition rate when the fresh chlorine gas supply is shut off. Iron recovery rates level off to 0.02-.03 grams/hour, less than 10% of their normal rates with chlorine addition. Upon resumption of chlorination, both tests showed a surge in iron recovery before returning to the 0.3-0.5 grams/hour level.

Recycle Tests Using Combinations of Solvents

Since the addition of one (1) part DMF to nineteen (19) parts of various solvents did improve pyrite decomposition rates significantly, a limited number of pairs of solvents were tested in the recycle system. The tests were necessarily limited, since the number of possible combinations, and the ratios between pairs of solvents within each combination provide possibilities outside the scope of this project. In addition, some tests were run with added elemental sulfur, as recommended by McElroy and Peters during investigations of sulfur chlorides as the principal chlorinating and solvating agent in the decomposition of pyrites. Fifty gram portions of pyrite were reacted with the solvent combinations over a 4-hour recycle period. Results appear in Table 7.

Recycle Tests at Elevated Temperatures

The four-hour recycle tests were performed at higher temperatures on six of the chlorine saturated solvents listed in Table 4. The temperatures selected for each reaction were dependent upon the solvent boiling point. Results were compared with earlier tests, and are summarized in Table 8 following. The three best tests using DMF additives were also reported.

Benefits derived from elevated temperature recycle runs were somewhat less than anticipated. McElroy and Peters reported that the chlorination rate increased 2.5 times

TABLE 7

FOUR-HOUR RECYCLE RUN USING

CHLORINATED SOLVENT COMBINATIONS

Solvent Combination	Additive	Shawville Pyrite Weight Loss in Grams: This Test	Shawville Pyrite Weight Loss in Grams: Best Previous Test With Either Solvent
Acetone/1,2 Dichloroethane (1:1)	--	0.404	0.52
CS_2/Nitrobenzene (1:1)	--	0.836	1.78
CCl_4/DMF (19:1)	5 g S°	3.22	4.40
CCl_4/DMF (19:1)	2.5 g S°	4.16	4.40
CCl_4/S_2Cl_2/DMF (17:2:1)	5 g S°	1.88	4.40
CCl_4/S_2Cl_2/DMF (17:2:1)	2.5 g S°	3.68	4.40

In every example above, some previous run using solvents alone or in 19:1 ratios with DMF yielded better pyrite decomposition rates than the combination tested. Optimizing the possible combinations and concentrations is an area for further exploration.

TABLE 8

FOUR-HOUR RECYCLE RUNS AT ELEVATED TEMPERATURES

Solvent	Boiling Point C°	Test Temp. C°	Shawville Pyrite Weight Loss in Grams Hi-Temp.	Ambient
Benzene	80.1	60°	3.04	2.80
Carbon Tetrachloride	76.8	60°	0.96	0.72
Carbon Tetrachloride/ DMF (19:1)		60°	5.08	4.40
Chloroform	61.2	50°	2.28	1.92
Chloroform/DMF (19:1)		50°	6.16	5.08
1,2 Dichloroethane	83.7	60°	0.44	0.28
1,2 Dichloroethane/ DMF/ (19:1)		60°	4.56	4.88
Methanol	64.7	50°	4.88	3.42
Nitrobenzene	210.9	90°	0.82	1.72

with CCl_4 as the solvent when the temperature was raised from 25°C to 41°C. Only about half of that rate of increase was observed during our 4-hour recycle test at 60°C. Nelson[13], et al, reported that oxidation rates for pyrites increased as temperature increased, but chlorination tended to increase as temperature decreased. The reaction may be dependent on the amount of chlorine which can be dissolved in solvents, a quantity which becomes smaller as temperatures go higher. For maximum benefits from increased temperatures, pressure leaching[14] or roasting techniques [15] are used.

Recycle Tests Under Ultra-Violet Radiation

During earlier tests it was found that even the best of the decomposition rates using nineteen (19) parts of solvent with one (1) part DMF could be improved slightly in the presence of an ultra-violet radiation source. Since no prior evaluations were made on solvents and UV-radiation in the absence of DMF, four such recycle runs using different chlorine-saturated solvents were performed. The chlorinated solvents chosen were benzene, carbon tetrachloride, chloroform, and 1,2 dichloroethane. All tests were run at ambient temperatures using 50 grams of Shawville pyrite and a four-hour recycle time. Findings are listed in Table 9 following.

The introduction of ultra-violet radiation had slight effect on reaction rates using the more efficient solvents, benzene and chloroform, increasing the rate of pyrite decomposition by 6 and 17%. For less efficient solvents, carbon tetrachloride and 1,2 dichloroethane, the improvement was significant at 86 and 186% respectively. Despite these sizeable gains, the less efficient solvents with UV-radiation still tended to decompose pyrites at a slower rate than the more efficient solvents without UV-radiation.

Effect of Particle Size, Surface Area, and Source

All tests performed thus far, both static and recycle, were run using Shawville coal pyrites from one homogeneous sample ranging in particle size downward from 1/8" to dust. To evaluate the effect of particle size, surface area and source, the samples of Shawville pyrites and Utah pyrite concentrates were sieved into two fractions: -18+60 and -60+200. Samples of the finer of these two fractions (-60+200) were analyzed for surface areas. These and other chemical and plysical parameters were shown in Table 1. Eight 4-hour recycle runs using 50 gram portions of each size fraction and from each source were run using chlorine-saturated carbon tetrachloride and chloroform. Data from these eight runs

TABLE 9

FOUR-HOUR RECYCLE RUNS UNDER ULTRA-VIOLET RADIATION

Solvent	Shawville Pyrite Weight Loss in Grams at 25° C	
	Without UV	With UV
Benzene	2.80	2.96
Carbon Tetrachloride	0.72	1.34
Chloroform	1.92	2.26
1,2 Dichloroethane	0.28	0.80

are summarized in Table 10, together with results obtained previously on the homogeneous Shawville sample. The Utah concentrates did not have sufficient +18 sieve material to run that comparison.

From the data it is apparent that Utah concentrates were more easily decomposed than Shawville coal pyrites. Only Shawville fines in chloroform approached the reaction rate of the western pyrites. This finding is especially interesting, since the surface area of Shawville pyrite is nineteen (19) times greater than the surface area of Utah concentrates. Many researchers[7] [8] [13] [16] have found direct correlations between surface area and reaction rates for pyritic oxidation in natural environments. One possible explanation for this apparent contradiction may lie in the higher crystalline pyrite concentration of the Utah concentrates. This hard, smooth-surfaced structure would be easier to wash with solvent than the multi-pore surface of Shawville coal pyrites. The latter's pores could become coated with reaction products, inhibiting transfer of these products from the reaction sites. Other observers have reported similar peculiarities in working with pyrites from various sources. Clark[7] found that some coal pyrites oxidize rapidly, while others are nearly inert. Hanna[17], et al, proved that coal seam pyrites behaved very differently from museum-grade pyrites. Mapstone[18] found wide variations in pyrites from the same source, depending on the effects of weathering.

For a given source, and for each solvent, the effect of particle size was predictable. The finer particle sizes yielded the higher decomposition rates. The two runs utilizing Utah concentrate fines with each solvent were allowed to recycle past the 4-hour time limit, but the chlorine supply was shut off. It was hoped that the decomposition of pyrites would be continued by reactions (2) and (3), but as in the long-term recycle tests with methanol, the reactions slowed to undetectable levels within two hours. In their work on the chemical aspects of acid mine drainage, Barnes and Romberger[19] found that ferric ion was not a major contributor to the oxidation of pyrites unless a very high Fe_{+3}/FeS_2 ratio was attained. Their work emphasized the importance of bacterial oxidation of pyrites. These useful organisms were reported to have accomplished 80% complete pyrite oxidation within 4-5 days in studies conducted by Silverman, Rogoff, and Wender[20]. Unfortunately, none of these bacteria could tolerate the chlorine-saturated solvent environments required for these tests.

TABLE 10

FOUR-HOUR RECYCLE RUNS FROM DIFFERENT SOURCES AND SIZES OF PYRITE

	Size Fraction	Pyrite Weight Loss in Grams in CCl_4	in $CHCl_3$
Utah Concentrate	-60+200	12.0	15.9
	-18+60	9.6	11.7
Shawville	-60+200	1.22	11.4
	-18+60	1.04	5.8
	-1/8" to dust	0.72	1.9

Recycle Test Using Chlorine-Saturated Water

One final 4-hour recycle test was run using 50 grams of Shawville pyrite and 500 ml of chlorine-saturated, deionized water as the solvent. The total weight loss measured by weighing the pyrite at the end of the test was less than 0.1 grams, while the iron recovered in the recycling solvent weighed only 0.02 grams. Pyrites were not decomposed by reaction with chlorinated water.

SECTION VIII

OTHER PYRITE DECOMPOSITION TESTS

Static Tests Using Vigorous Abrasion

As an alternative to recycling of solvents, an attempt was made to provide transport of reaction products away from the pyrite surfaces by vigorous abrasion in a Waring Blender. Twenty grams of Shawville pyrite fines ($<$200 mesh) were used in tests similar to the solubility measurements reported in Table 3, except that contact times were shortened to four (4) hours. Tests were run with chlorine-saturated carbon tetrachloride, chloroform, and 1,2 dichloroethane. Chlorine gas was sparged into each charge for 10 minutes prior to the test, then for five (5) minutes at half-hour intervals during the test. At all other times the pyrite suspension was agitated at 1450 RPM in 300 ml of solvent. Samples were withdrawn at hourly intervals for determination of dissolved matter. Results are shown in Table 11.

With 1,2 dichloroethane showing the most improvement, the dissolution of pyrites was found to proceed at an accelerated rate when compared with earlier solubility measurements run with no provisions for vigorous abrasion. Using abrasion, 50% more solutes were found in that solvent in a four-hour contact time than were originally found in 24 hours. However, rates were still somewhat slower than those obtained in recycle tests run for the same period of time.

Evaluation of Reaction (2) - $FeCl_3$ as an Oxidant

A saturated solution of $FeCl_3$ in unchlorinated methanol was prepared by dissolving 375 grams of $FeCl_3$ in 300 ml of methanol. The absence of chlorine was required to fully evaluate the oxidation of pyrites by ferric chloride. Methanol was chosen as the solvent to insure the high ferric ion/pyrite ratio recommended by Barnes and Romberger[19] to accomplish any oxidation at all. A 150 ml aliquot of this saturated solution was diluted to 300 ml with pure methanol, giving a 50% saturated solution. Chunks of Shawville pyrite 0.75 to 1.5 grams in weight were immersed into each mixture overnight. Pyrite weight losses following thorough rinsing and drying of the specimens were 0.046 grams in the 100% saturated solution, and 0.076 mg in the 50% saturated solution. Both losses were considerably less than the 0.371 grams of residues reported for unchlorinated methanol in previous solubility tests. The high concentrations of iron salts present may have inhibited the action of unchlorinated methanol on pyrites.

TABLE 11

SOLUBILITY OF SHAWVILLE PYRITES IN CHLORINATED SOLVENTS WITH ABRASION

Elapsed Time	Grams of Residue/100 Grams of Solvent @ 25°C		
	CCl_4	$CHCl_3$	CH_3CHCl_2
1 Hour	0.010	0.006	0.059
2 Hours	0.022	0.016	0.112
3 Hours	0.035	0.028	0.170
4 Hours	0.048	0.039	0.210
Static Solubility Tests Run earlier: (no abrasion)			
24 Hours	0.074	0.048	0.13
15 Days	0.22	0.23	0.59

In-situ Oxidation of Pyrites with Oxygen

The apparatus shown in Figure 5 was used to evaluate the possibility of direct oxidation of pyrites in chlorinated carbon tetrachloride. Tests were run using Shawville pyrite fines, and using 1/4" mesh size lumps; at ambient temperatures and at 41°C; and at one atmosphere and at two atmospheres pressure. In all cases, samples were maintained under 100% O_2 atmospheres for 72 hours. All tests led to the same conclusion--no oxygen consumption by any reactant or reaction product had occurred during any part of the 72 hours.

SECTION IX

ACKNOWLEDGEMENTS

The pyritic materials used for this project were obtained through the co-operation of the management of Pennsylvania Electric Company's Shawville Power Station near Clearfield, Pennsylvania, and through the assistance of Mr. K. M. Ogilvie, Combustion Engineer, Kennecott Copper Corporation's Metal Mining Division, Salt Lake City, Utah.

The support of the project by the Water Quality Office, Environmental Protection Agency, and the help provided by Mr. Donald J. O'Bryan, Jr., Dr. James M. Shackelford, the Grant Project Officer and Ernst P. Hall, Chief of the Pollution Control Analysis Branch, is acknowledged with sincere thanks.

Mr. Robert J. Ondof and Mr. Richard C. Rice of the Cyrus Wm. Rice Division - NUS CORPORATION, designed, built, and operated the apparatus used during the course of this project. Mr. Dennis A. Clifford, formerly of the Cyrus Wm. Rice Division - NUS CORPORATION, took part in preparation of this report.

SECTION X

REFERENCES

1. McElroy, R., and Peters, E. E., "Chlorination of Pyrites In Chlorinated Hydrocarbon Solvents," Paper presented at the Seventh Annual Conference of Metallurgists, Vancouver, British Columbia (1968).

2. American Public Health Association, Inc., Standard Methods for the Examination of Water and Waste Water, Thirteenth Edition, American Public Health Association, New York, N. Y, (1971).

3. Environmental Protection Agency, Water Quality Office, Analytical Quality Control Laboratory, Methods for Chemical Analysis of Water and Wastes. 16020 . . . 7/71, Cincinnati, Ohio (1971).

4. Gyenes, I., Titration in Non-Aqueous Media, D. Van Nostrand Company, Inc., Princeton, N. J. (1967).

5. Kucharsky, J., and Safarik, L., Titrations in Non-Aqueous Solvents, Elsevier Publishing Company, New York (1965).

6. Burnauer, S., Emmett, P. H., and Teller, E., "The Adsorption of Gases in Multimolecular Layers," Journal Am. Chem. Soc., 60, pp. 309-316 (1938).

7. Clark, C. S., "Oxidation of Coal Mine Pyrite," Journal of the Sanitary Engineering Division, ASCE, 92, No. SA-2, Proceedings Paper #4802, pp. 127-145 (1966).

8. Braley, S. A., "Summary Report on Commonwealth of Pennsylvania Department of Health Industrial Fellowship Nos. 1 to 7 inclusive," Mellon Institute Fellowship No. 326B, February, 1964

9. Singer, P. C., "Oxygenation of Ferrous Iron," Water Pollution Control Research Report No. 10410 06/69, Harvard University (1970).

10. Sato, M., "Oxidation of Sulfide Ore Bodies, II. Oxidation Mechanisms of Sulfide Minerals at 25°C.," Economic Geology, 55, pp. 1202-1231 (1960).

11. Sherman, M. I., and Strickland, J. D. H., "Dissolution of Pyrite Ores in Acid Chlorine Solutions," Journal of Metals, Transactions of AIME, 9, pp. 1386-1388 (1957).

12. McKay, D. R., and Halpern, J., "A Kinetic Study of the Oxidation of Pyrite in Aqueous Suspension," Transactions of the Metallurgical Society of AIME, 212, pp. 301-309 (1958).

13. Nelson, N. W., Snow, R. D., and Keys, D. B., "Oxidation of Pyritic Sulfur in Bituminous Coal," Industrial and Engineering Chemistry, 25, No. 12, pp. 1355-1358 (1933).

14. Warren, I. H., "The Generation of Sulphuric Acid from Pyrite by Pressure Leaching," Australian Journal of Applied Science, 7, pp. 346-358 (1956).

15. LaRosa, P. J., and Michaels, H. J., "Study of Sulfur Recovery from Coal Refuse," Environmental Protection Agency, Water Quality Office, Water Pollution Control Research Series, 04010 FYY 09/71, Black, Sivalls, and Bryson, Incorporated (1971).

16. Lorenz, W. C., and Tarpley, E. C., "Oxidation of Coal Mine Pyrites," U. S. Department of the Interior, Bureau of Mines, Report of Investigations No. 6247 (1963).

17. Hanna, G. P. Jr., Lucas, J. R., Randles, C. I., Smith, E. E., and Brant, R. A., "Acid Mine Drainage Research Potentialities," Journal of the Water Pollution Control Federation, 35, pp. 275-294 (March 1963).

18. Mapstone, G. E., "The Weathering of Pyrite," Chemistry and Industry, 73, pp. 577-578 (1954).

19. Barnes, H. L., and Romberger, S. B., "Chemical Aspects of Acid Mine Drainage," Journal of the Water Pollution Control Federation, 40, No. 3, pp. 371-384 (1968).

20. Silverman, M. P., Rogoff, M. H., and Wender, I., "Removal of Pyritic Sulphur from Coal by Bacterial Action," Fuel, 42, pp. 113-124 (1963).

1 Accession Number	2 Subject Field & Group	SELECTED WATER RESOURCES ABSTRACTS INPUT TRANSACTION FORM
	05B, 05G	

5 Organization
Environmental Protection Agency, Water Quality Office (Federal Office)
Cyrus Wm. Rice Division, NUS Corporation (Contractor)

6 Title
Oxidation of Pyrites in Chlorinated Solvents

10 Author(s)
Boros, Joseph A.
Brenneman, Donald R.
Troy, Joseph C.

16 Project Designation
Project No. 14010 FMM
EPA Contract No. 14-12-897

21 Note

22 Citation
Environmental Protection Agency report number EPA-R2-72-069, November 1972.

23 Descriptors (Starred First)
*Pyrites, *Chlorination, *Coal Mine Wastes, *Iron Compounds, *Sulfur Compounds, Waste Dumps, Ultimate Disposal, Acid Mine Water, Water Pollution Sources, Sulfides, Pollution Abatement.

25 Identifiers (Starred First)
*Non-Aqueous Chlorination, Chlorinated Solvents

27 Abstract The purpose of this study was to develop methods for extracting sulfur and iron compounds from pyritic waste materials, producing a final refuse that is incapable of causing water pollution, and at the same time, conserving useful mineral resources. The primary method under investigation was the chlorination of pyrites in non-aqueous solvents.

An attractive feature of the proposed method was its cyclic nature. Chlorine would serve as the original driving force for the expected reactions, but would be replaced as primary oxidant by two products of the chlorination reaction, ferric chloride and sulfur dichloride.

Test results indicated that the successful extraction of sulfur and iron compounds depended upon the continuous addition of chlorine gas to the system. The expected replacement of chlorine by ferric chloride and sulfur dichloride was not achieved under conditions of this study. The reaction rates with chlorine gas varied with the particle size and source of the pyritic material; with the choice of solvent; and with the means of providing intimate contact between pyrites and chlorine-saturated solvents. Recycling solvents through beds of pyrite significantly improved rates of reaction, while elevated temperatures and treatment in the presence of ultra-violet radiation yielded slight improvements in reaction rate. This report contains 20 references.

Abstractor	Institution
Joseph A. Boros	Cyrus Wm. Rice Division - NUS Corporation

WR:102 (REV. JULY 1969)
WRSIC

SEND TO: WATER RESOURCES SCIENTIFIC INFORMATION CENTER
U S DEPARTMENT OF THE INTERIOR
WASHINGTON, D C 20240

* GPO: 1969-359-339

☆ U. S. GOVERNMENT PRINTING OFFICE : 1972—514-149/95