WATER POLLUTION CONTROL RESEARCH SERIES ● 15080DXE11/70

FEASIBILITY ANALYSIS OF INCINERATOR SYSTEMS FOR RESTORATION OF OIL CONTAMINATED BEACHES

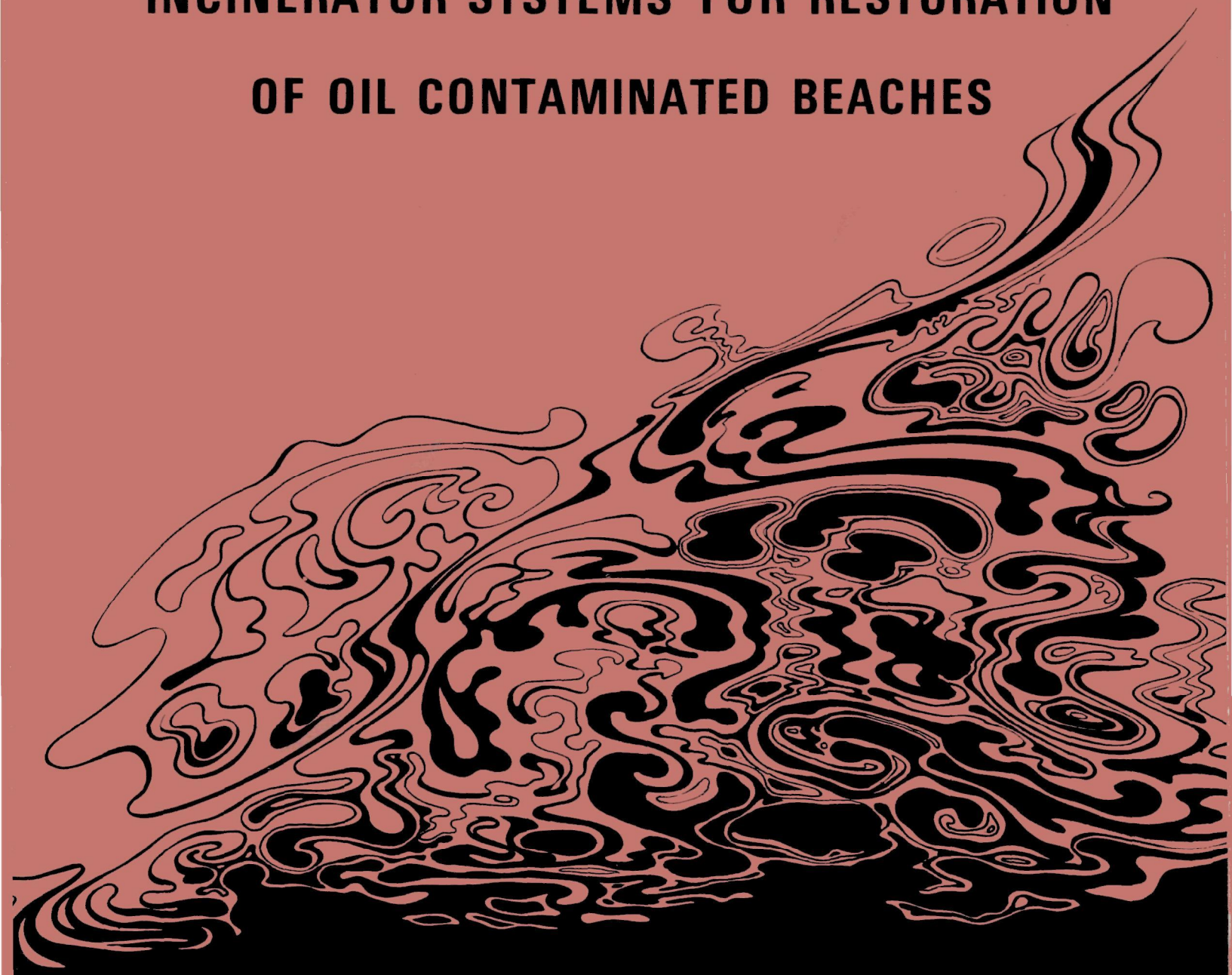

ENVIRONMENTAL PROTECTION AGENCY • WATER QUALITY OFFICE

WATER POLLUTION CONTROL RESEARCH SERIES

The Water Pollution Control Research Reports describe the results and progress in the control and abatement of pollution in our Nation's waters. They provide a central source of information on the research, development, and demonstration activities in the Water Quality Office of the Environmental Protection Agency, through in-house research and grants and contracts with Federal, State, and local agencies, research institutions, and industrial organizations.

A triplicate abstract card sheet is included in the report to facilitate information retrieval. Space is provided on the card for the user's accession number and for additional uniterms.

Inquiries pertaining to Water Pollution Control Research Reports should be directed to the Head, Project Reports System, Planning and Resources Office, Office of Research and Development, Water Quality Office of the Environmental Protection Agency, Room 1108, Washington, D. C. 20242.

A FEASIBILITY ANALYSIS OF INCINERATOR SYSTEMS FOR RESTORATION OF OIL CONTAMINATED BEACHES

by

ENVIROGENICS CO., DIVISION OF
AEROJET-GENERAL CORPORATION
9200 EAST FLAIR DRIVE
EL MONTE, CALIFORNIA 91734

for the

WATER QUALITY OFFICE
ENVIRONMENTAL PROTECTION AGENCY

PROGRAM #15080DXE
NOVEMBER 1970

For sale by the Superintendent of Documents, U.S. Government Printing Office
Washington, D.C., 20402 - Price 75 cents

EPA REVIEW NOTICE

This report has been reviewed by the Environmental Protection Agency and approved for publication. Approval, however, does not signify that the contents necessarily reflect the views and policies of the Environmental Protection Agency, nor does mention of trade names or commercial products constitute endorsement or recommendation for use of this method of restoring beaches contaminated by oil.

ABSTRACT

The feasibility of employing a combustion process for restoring oil contaminated beaches was investigated. Beach access problems and the handling characteristics of shore materials limited the potential application to recreational (sand) sites. Thermodynamic arguments required that a system design be adopted in which the contaminated sand would undergo combustive processing in a confined arrangement. The design selected, from those analyzed, proved to be a three-effect combustor based on the rotary kiln principle. Provided that the sand to be cleaned is carefully enough collected to furnish a reasonable ($\geq$6%) oil content and is moved away from the surf and drained to an acceptable moisture level ($\leq$6%), basic processing costs would be highly attractive. In comparison with uncontaminated sand, the cleaned product exhibits only a slightly greyish hue.

This report was submitted in fulfillment of Contract No. 14-12-595 between the Environmental Protection Agency and the Envirogenics Co., Division of Aerojet-General Corporation.

KEY WORDS: Beaches, oil wastes, cleaning, shore protection, shores, costs, incineration, oily water.

CONTENTS

Section		Page
	Abstract	iii
	Table of Contents	iv
	List of Figures	v
	List of Tables	vi
I	Conclusions	1
II	Recommendations	5
III	Introduction	7
IV	Properties Compilation	9
V	Combustion Considerations	25
VI	System Design	45
VII	Acknowledgements	69
VIII	References	71

FIGURES

Number		Page
1.	Ten TPH Combustive Sand Renovator	2
2.	Moisture Loss of Wet Sand by Capillary Drying . . .	33
3.	Sand-Oil-Water Mixtures Furnishing Balanced Energy Contents in Adiabatic Combustion	34
4.	Rate of Temperature Rise in Sand/Oil Column With Impinging Flame	37
5.	Rotary Kiln Test Apparatus	38
6.	Time/Temperature Relationship in Cleaning Carbon-Coated Sand	39
7.	Cyclone Test Apparatus	41
8.	Batch Type Sand Cleaner	48
9.	Basic Continuous Sand Cleaning Flow Diagram	50
10.	Hot Sand Recycle Flow Diagram	51
11.	Hot Air Recycle Flow Diagram	53
12.	Fresh Air Reheat With Sand Cooler Flow Diagram . .	57
13.	Basic Rotary Kiln Sand Cleaner	58
14.	Rotary Kiln Cleaner With Hot Sand Recycle	59
15.	Estimated Weight of Basic Sand Combustor	60
16.	Estimated Construction Costs of Basic Sand Combustor	63

TABLES

Number		Page
1.	Information Sought in Field Survey	10
2.	Personnel Contacted on Field Survey	12
3.	Classification of Beach Materials	13
4.	Composition of Oil Contaminated Beach Samples (Puerto Rico)	18
5.	Sand Removal Required for Beach Renovation as Estimated by URS Research Co.	19
6.	Summary of Theoretical Combustion Calculations . .	27
7.	Average Composition of Beach Samples Taken in Puerto Rico After OCEAN EAGLE Incident	29
8.	Theoretical Energy Balances for the Adiabatic Combustion of Various Oil-Sand-Water Mixtures . .	31
9.	Sieve Analysis, Playa del Rey Beach Sand	35
10.	Combustive Sand Cleaning Cost Estimates	66

SECTION I

CONCLUSIONS

Process Feasibility: The renovation of oil-contaminated shorelines using a combustive process is practical only under certain conditions. In-place cleaning with flames is not feasible; the contaminated beach material must be excavated and fed into the combustor. The sand cleaned by combustion does not entirely recover its original color; a slightly greyish tone persists. This is due to tiny pockets and platelets of carbon which adhere to granules that are not of quartz origin. Abrasion in the surf would probably remove this source of slight discoloration.

System Configuration: The system recommended is a three-chamber combustor operating on the rotary kiln principle. In the first chamber, combustion air, recuperatively heated, would be introduced in concurrent flow with the oily sand. The feed would dehydrate, the oil become evenly distributed on the granules, and partial volatilization and/or pyrolysis of the oil fraction would occur. Before exiting the first chamber, the sand feed would achieve a carbonized condition and good flow properties. The granular, carbon-coated sand resulting from this treatment would then be passed into a higher temperature kiln where the gas/solid flow would be countercurrent. Here the material would be decarbonized and cleaned to output condition. Heat could be extracted from the cleaned sand prior to discharge in a third, rotating section.

An output of 60 tons/hr is envisioned for a full-scale system. This should permit, with proper earth-moving practice, the renovation of a 20 ft wide strip of beach to a depth of 2 in. at a rate of one mile per each 8-hr work day. Based on conceptual drawings (see Figure 1) a subscale system (10-30 tons/hr) suitable for immediate field testing would be 40 ft long, 16 ft wide, and 13 ft high (excluding stack); it would weight about 13 tons. Because of the large size of the system, self-propulsion would not be practical. The recommended method of use would be to position the combustor on a level portion of the beach and have front-end loaders bring material to it. As the clean-up operation progressed down the beach, the combustor would be periodically moved by bulldozer or other suitable vehicle. The input and output material would be handled by suitable conveyor equipment.

In terms of sand cleaning, the performance of the envisioned system should not be affected when drift trash and other beach debris is fed into it. The latter material should also emerge oil-free, but probably not all of it would be fully combusted. Such charred articles should be screened from the discharge.

Characteristics of the Feed: Only limited data could be obtained on the composition of sand removed from oil-contaminated beaches. These resulted from laboratory tests performed by Government technicians in connection with the clean-up following the OCEAN EAGLE disaster

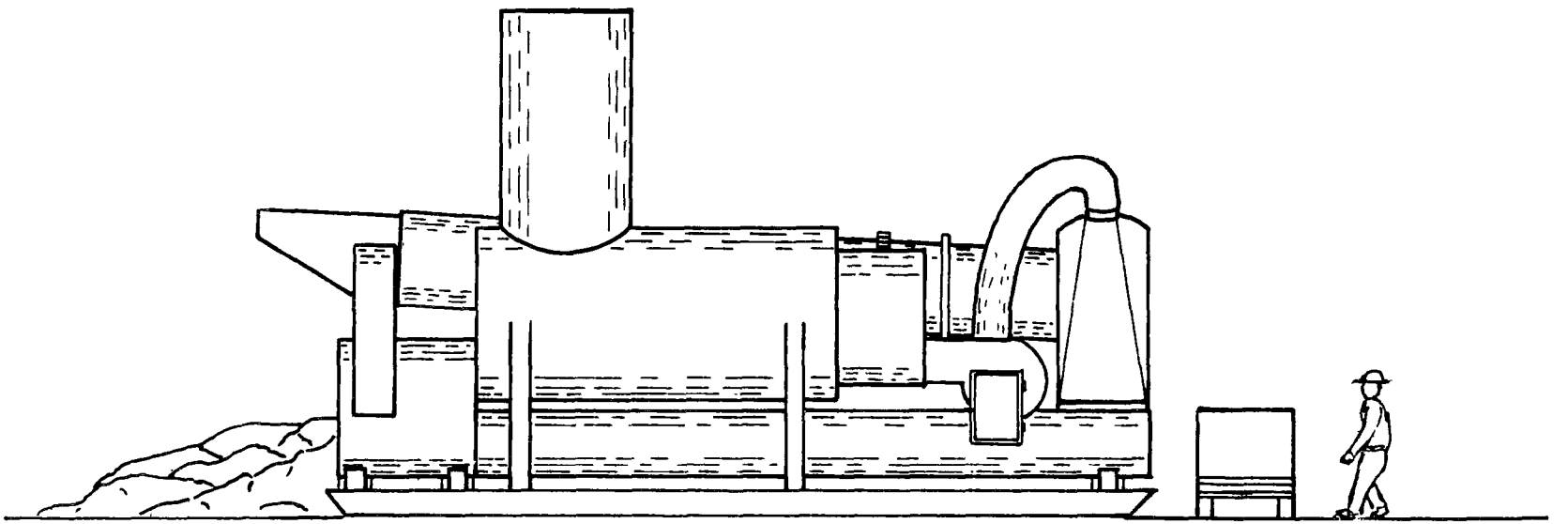

FIGURE 1. TEN TPH COMBUSTIVE SAND RENOVATOR

at San Juan, Puerto Rico. The many samples taken by these workers were described as resembling the material that was excavated for disposal. An average of 16 wt-% of petroleum residues was observed. Estimates by FWQA officials at another spill site ranged even higher, while others have suggested that the 16 wt-% value is unrealistically high.

For combustion purposes, an oil content of 6 wt-% is adequate for self-sustained combustion provided the moisture content is also about 6 wt-%. Typical beach sand removed from the swash zone, and from which excess sea water has been poured off, will have a moisture content of about 11 wt-%. If piled on dry sand, however, such wet material will drain by capillary action to about 6 wt-% in about one hour.

Equipment Deployment and Operation: Because of the envisioned size the combustor, transportation to the spill site should be handled by firms specializing in the drayage of heavy equipment. It is doubtful that transportation by air would be practical. In fact, the width of even a 10 tph unit is such (13 ft) that rail-haul would not be possible. The system could be designed so that it could be dismantled for air- or rail-haul, but this increases capital costs by at least 25%.

Truck drayage appears to be the only suitable means of cross-country deployment and this would probably require removal of the stack and the issuance of a special permit in most states because of equipment width. In moving the combustor between coastal points, serious consideration should be given to the use of barges. An actual landing of the equipment by amphibious craft at the beach site would also be possible, but only if the shore terrain were favorable.

It has been concluded that the combustor would best find application on sand beaches of the recreational type which are reasonably accessible by good roads. The beach itself should have enough reasonably flat back-shore area to permit the periodic movement of the machine.

Once on the beach, the combustor would operate as a self-sufficient plant with the exception of fuel supply. Auxiliary firing would be accomplished using diesel oil, which would also fuel a motor/generator set. The latter would be rated at 45 hp for a 10 tph combustor.

Combustor throughput has been very conservatively set and may well prove to be low by a factor as high as three. Establishment of this parameter was based on a thermodynamic analysis, in which several conservative assumptions had to be introduced.

Air Pollutants: When properly fired, particulate emissions from oil are quite low. In tests conducted on the present program, essentially smokeless flames were obtained when oil/sand/water mixtures were combusted under process conditions. There is no reason why this should not also be the case in scaled-up systems. Observation of gaseous emissions was not undertaken. The insignificant levels involved should be acceptable considering the nature of the combustor's function.

Cost Factors: While in service, the basic operation and maintenance costs of the combustor are relatively low. Based on an 8-hr day operation, the cleaning cost would come to $0.54/ton if the input sand contained 6 wt-% oil and 6 wt-% moisture. If sand of the same moisture but containing no oil were fired, the cost would increase to $2.78/ton. A number of other cost factors must also be considered. Most, however, are dependent on variables that cannot be readily fixed. Capital cost recovery, for example, must be set on the basis of some arbitrary utilization rate to determine chargeback. For example, if it were assumed that a 10 tph unit would be used only 30 working days per year, the user would be expected to pay $5.00 for each ton of sand cleaned. This would allow the owner to annualize his capital costs at a rate of return of only 8%.

Transportation costs have also been found to be highly variable. These will depend on the haul distance, the method of drayage, the need for exclusive vehicle privileges, and the availability of suitable unloading equipment and crews at the point of delivery. As a generalization, overall truck transportation costs would probably run about $25.00 for each hour the carrier is away from its terminal.

A final factor is the cost of operational support furnished by other personnel and equipment working at the site. It is felt, however, that because of the functions normally performed at a spill site, that no additional equipment or manpower would actually be required.

SECTION II

RECOMMENDATIONS

Because of the increasing rate of oil spill disasters[1], an early reduction to practice of the conceptual system described herein is advised. It is recommended that the 10-30 ton/hr subscale system be committed to final engineering design form and that a field test machine then be fabricated and tested. Design characteristics for a suitably scaled system could then be generated based on cost-effectiveness analyses of the various possibilities. It is not recommended, however, that a single program attempt to eventuate in the development of a complete and fully detailed design of a correctly scaled system. The level of effort required for such a task would be too uncertain to plan and budget for prior to the initiation of pilot work. It is felt, in fact, that the subscale (10 tph) test system recommended in this report may prove quite satisfactory, perhaps after suitable modification, for routine beach clean up operations.

Finally, it is recommended that such a test program be conducted so that an FWQA Oil Spill Coordinator would have an opportunity to participate, at least during key, on-site test operations. The experience of such an individual would be invaluable in insuring that the work was performed in a manner consistent with realistic beach disaster conditions.

---

[1] While this report was being written, four major petroleum spills occurred. These were the tank vessel accidents involving the DELIAN APPOLLO in Tampa Bay, Fla, the ARROW off Chedabucto Bay, N.S., and the two tank barges in Humboldt Bay, Calif and Jacksonville, Fla.

SECTION III

INTRODUCTION

The clean up of coastal areas contaminated by petroleum spills is as unpleasant as it is expensive. If not properly conducted, a renovation effort can result in devasting effects on the biota, serious depletion of recreational sand inventories, and lingering contamination problems that are not immediately obvious. The development of safe and more cost-effective techniques is now being vigorously pursued by the Federal Water Quality Administration, and other public and private agencies. An objective common to these organizations is the development of a capability wherein spills can be isolated and collected at sea before shore areas are befouled. However, some incidents of oil stranding will be unavoidable, as when the petroleum issues from a shore facility or beached vessel, or from an off-shore source close to land.

Recognizing the inevitability of such situations, the FWQA is currently sponsoring several programs dealing with new shore renovation concepts. A definite trend being established by this new technology is toward processes that avoid the sacrifice, by disposal, of valuable natural resources, notable among which is the sand of recreational beaches. In line with this objective, the present program has been addressed to the investigation of combustive techniques.

Although any form of oil burn-off will certainly destroy any organisms present, it is a process that would involve only a limited segment of the riparian zone. In any case, few totally nondestructive processes can be conceived of and these are slow. Relying on the washing action of the surf and/or biological effects to remove stranded oil can usually not be accepted if recreational areas are to be quickly returned to public use.

Depending on the nature of the problem, a variety of approaches are possible in considering the use of combustion processes for beach decontamination. Even when the proper modality is recognized, trade-offs still must be considered since the conceptual design inputs can be influenced by many economic, thermodynamic, and operational constraints. The approach used in dealing with such factors and in attempting to realize an optimum system design is summarized below.

The initial task performed consisted of a planning analysis wherein the project objectives were defined and methods for their accomplishment were selected. This resulted in the following phased approach being adopted.

Properties Compilation: The purpose of this task was to acquire data that would be needed in the feasibility analysis, particularly with respect to equipment design parameters. Included in this search was information on the nature of continental U.S. shore areas, the properties

of oil-contaminated beach materials, the nature of oil spills and the renovation methodology hitherto practiced. This was accomplished by reviewing the extant literature and by conducting a field survey in which various specialists, including personnel associated with the clean up of four major oil spills, were interviewed.

Combustion Considerations: A critical analysis of the combustion process involving the sand-petroleum-water system was to be conducted in order to develop semi-qualitative data needed for system selection and design. Bench work was then to be performed to verify the conclusions derived and to determine the properties and behavior of various input compositions and the quality obtainable in outputs that had been variously processed.

System Design: Practical engineering design features were to be developed and incorporated in various system concepts. The information developed to this point was then to be reviewed and the final conceptual design hardened.

The work performed on this program was jointly carried out by the Envirogenics Co., Division of the Aerojet-General Corporation (prime contractor) and Hirt Combustion Engineers of El Monte and Montebello, California, respectively. The program manager was Mr. R. M. Roberts; the principal contributors were Dr. R. W. Lawrence of Envirogenics Co. and Messrs. T. S. Hoyt and C. S. Miller of Hirt. The Project Officer was Mr. G. Burke of the FWQA facility at Alameda, California.

SECTION IV

PROPERTIES COMPILATION

Overview: Testing the feasibility of and developing designs for combustion-type equipment for renovating oil contaminated beaches requires the assessment of many factors. An understanding of the properties of shore terrane materials containing petroleum intrusions is certainly a necessity. Of almost equal importance, however, is the consideration of economic constraints which place practical limits on the scope of clean-up operations. One must consider the self-mitigating nature of oil damage in terms of esthetic and toxic effects, and the manner in which damage-control decisions can be influenced by oil type, magnitude and time-frame of intrusion, availability of equipment and disposal areas, and the types of beaches on which the oil becomes stranded. Thus, in formulating design guidelines, a broad overview of the application situation must be developed. This was the purpose of the first task undertaken on the program.

Methodology: The somewhat limited literature on oil spill control and decontamination was collected and reviewed. This was done primarily to obtain information concerning the physical, chemical, and thermodynamic properties of petroleum-fouled, shore terrane materials. Additionally, selected source works on geomorphology were consulted to acquire a general appreciation of the nature of the shoreline of the continental U. S. This overall literature is listed in Section 8 as references 1 through 34. Unfortunately, the Joint (API/FWPCA) Conference on Prevention and Control of Oil Spills held in New York City in mid-December 1969 occurred too late in the program to be included in this review.

In conjunction with this literature review, which was periodically updated, a field survey was conducted. This consisted of interviewing technical and supervisorial personnel cognizant of or involved in comparatively recent, major spill incidents. This included, where possible, individuals who were on the scene from the peak of contamination until the ultimate clean up was effected. The information was sought using the questionnaire check-list shown in Table 1.

TABLE 1

Information Sought in Field Survey

NATURE OF SPILL

- Type and estimated quantity of petroleum released by accident.
- Estimated amount of petroleum deposited on shore.
- Sea state existing during major portion of slick movement.
- Distance between leakage source and affected shore area.
- Estimated sea residence time of slick before contacting beach.

ENVIRONMENTAL CONDITIONS

- Water and air temperature.
- Cloud cover.
- Surf characteristics.
- Tidal range during and after incident.
- Presence of sea-borne chemical dispersants, oil-absorbents, and drift-trash (wood, kelp, flotsom, etc.).

GEOLOGICAL STRUCTURE AND DIMENSIONS OF AFFECTED AREA

- Classification of terranes and minerals.
- Dynamic factors (particularly sand movement).
- Sand/stone interdistribution.
- Excavatability of terrane materials.

TABLE 1 (Cont'd)

PROPERTIES OF CONTAMINATED BEACH MATERIALS

- Oil distribution characteristics - film thickness, substrate penetration, continuity, etc.
- Deposit characteristics - degree of emulsification, moisture content, rheology, variation of properties with depth, aging effects.
- Characteristics of excavated sand/oil mixtures.
- Mechanical techniques employed.
- Agglomerative and packing mechanics.
- Typical compositions outloaded - moisture, petroleum, pebbles/stones, etc.

The personnel contacted are shown in Table 2. The oil accidents selected for study were: (1) Rehoboth Beach, Delaware - oil barge HESS HUSTLER; (2) Puerto Rico - S. S. OCEAN EAGLE; (3) Panama Canal (Atlantic entrance) - S. S. WITWELL; and (4) Santa Barbara, California - Union Oil Company, Platform A.

While considerable valuable information was acquired on this survey, many items listed in Table 1 could, at best, only be coarsely estimated using the interview technique. The questionnaire guide was accordingly pared down by eliminating items of marginal relevance and those which, to obtain, would require an effort disproportionate to the value gained. The net body of information acquired in both the literature review and the field survey was then screened and digested. The broad problem overview and conclusions developed are summarized below.

NATURE OF THE CONTINENTAL U.S. LITTORAL

Nomenclature: The standardized geological terminology recommended by King (Ref. 13) will be observed in this report. The term "beach" includes the zones of the back-, fore-, and off-shore regions. Backshore is the area lying just beyond the reach of the swash of the normal high spring tide and is therefore only wetted under the influence of exceptional seas or tides. On a rocky coast, the backshore includes the cliffs and palisades, while on low coasts will include sand dunes and mature salt marshes. The foreshore (intertidal) zone is that part of the beach which extends from the swash mark at highest annual tide to backwash level at lowest annual tide. The offshore zone extends from the latter point to a distance at which the movement of beach material is negligible under normal water conditions.

TABLE 2

Personnel Contacted on Field Survey

Individual Visited (1)	City	Position/Affiliation
J. R. Fraser T. H. Gaines	Los Angeles, Calif.	Union Oil Company
D. Craggs	Santa Barbara, Calif.	Union Oil Company
P. G. Mikolaj	Santa Barbara, Calif.	University of California at Santa Barbara
H. Bernard	Washington, D. C.	Chief, Agricultural & Marine Pollution Control Branch, FWQA
K. E. Biglane	Washington, D. C.	Director of Div. of Tech. Support, FWQA
L. P. Haxby	New York, N. Y.	Chairman, API Committee for Air and Water Conservation
LCDR P. Sova	New York, N. Y.	Intelligence & Law Enforcement Branch, USCG
H. J. Lampl E. J. Struzeski, Jr.	Edison, N. J.	Hudson-Delaware River Basins Office, Edison, N. J., FWQA
L. C. Mendez	San Juan, P. R.	Army Corps of Engineers
G. Trotter	Bayamon, P. R.	Caribbean Refining Corp.
H. Ramirez L. Hyman P. Getabert R. Rodriguez	San Turce, P. R.	Dept. of Public Works, Comm. of P. R.
E. H. Kohn P. W. Glynn	Balboa, C. Z.	Smithsonian Tropical Research Institute

(1) Listed in chronological order.

In terms of the two prevalent shore forms[2], the composite sand beach and the composite shingle beach, separate nomenclatures have developed. This is because of the topographical differences between the two which arise from the degree of consolidation of the shore materials involved.

The composite sand beach usually features a terrace, called a "berm," which is situated just above the highwater swash. It is of variable width and may slope somewhat in either the fore- or backshore direction. In the foreshore zone, crests and depressions are called, respectively, ridges and runnels. In the offshore zone these corresponding features are called submarine bars and troughs. Thus runnels, which are high and dry at low water, tend to trap rubble, drift trash and oil, while troughs, which are always under water, tend to accumulate pebbles and tarry deposits that have agglomerated with heavier materials (e.g., sinking agents). Above-water sand bars separated from the shore by lagoons or channels are referred to as "barrier beaches" or "islands," depending on their dimensions.

In the backshore of the shingle beach, prominences are referred to as "beach ridges," while the separating depressions are described as "swales." The smaller features developed in the intertidal zone are called "foreshore steps," while the step located at the break point of low water waves is called the "break-point step."

The size classification of materials occurring in beaches will follow the system adopted by Zenkovish (Ref. 14), as shown in Table 3. This classification is applicable regardless of the origin of the material. Biotic residues can, however, be further identified by referring to them as shell gravel or coral shingle, for example.

TABLE 3

Classification of Beach Materials

Description	Diameter, mm
Boulders	100 (!)
Shingle, large	100-50
Shingle, medium	50-20
Shingle, fine	20-10
Gravel, large	10-5
Gravel, medium	5-2
Gravel, fine	2-1
Sand, coarse	1.0-0.5
Sand, medium	0.5-0.25
Sand, fine	0.25-0.1
Silt, various grades	<0.10

[2] As many as eight basic beach types have been classified (Ref. 9), but for present purposes these two types need only be considered.

Geomorphology: According to McGill (Ref. 11), who was personally contacted and generously furnished advice, and the Morskoi Atlas (translation in Ref. 12), the U. S. Atlantic and Gulf coasts, all the way from Long Island, N. Y., to Corpus Christi, Texas, are geomorphically homogenous. With the exception of some delta plains, associated with the Mississippi and Brazos Rivers, and the riverine complex emptying into Mobile Bay, this entire shoreline is essentially a system of wind shaped coastal dunes deposited on sedimentary plains. Excluding Alaska, this type of riparian perimeter exists over 60% of the U.S. coastline, presents a high potential for recreational (bathing) activity, and, unfortunately, is highly vulnerable to oil damage. In addition to a heavy tank-ship traffic off these coasts, sea-platform drilling is extensive in the Gulf region and some 105 tanker hulks, casaulties of German submarines in World War II, are scattered (Ref. 16) throughout the entire area.

South of Corpus Christi to the mouth of the Rio Grande, the land form consists of dune plains, with scattered delta plains. While suitable for recreation, the beach area is sparsely populated.

North along Long Island Sound to Cape Cod, itself partially alluvial (Buzzards Bay) and partially of wind-formed coastal dunes, the region predominates in glaciated complex hills. With the exception of Cape Cod, this region offers relatively few pleasure beaches. The coastline north of Cape Cod is similar to that south of it. This region, however, underwent extensive post-Wisconsin marine submergence and presently is undergoing geological emergence due to isostatic rebound. This has resulted in a very rocky coast, which, with tidal ranges in excess of ten feet, has made the area largely unsuitable for recreational beach activities other than shore fishing.

The west coast of the U.S. is geomorphically very complex. It should also be noted that unlike the Atlantic side, the Pacific waters abound with kelp beds all the way north to the Aleutians. Exceptions are short reaches along the Oregon-Washington coast where barrier beaches exist and in the areas around Chula Vista and Cape Mendocino, California. The coast of the latter State from Point Conception south to the Mexican border is an equally distributed system of stream-eroded complex hills and mountains, and of alluvial plains. Because of the influence of water erosion, good beaches exist over most of this coastline, although many are inaccessible and, therefore, relatively unused. Between Point Conception and Monterey Bay the coast structure is about 50% stream-eroded complex hills and alluvial plains and 50% complex mountains. Relatively few accessible beach areas exist here, with the notable exceptions of Morro and Monterey Bays. North of the latter point to about Rockport, California, the coastal system consists of complex hills which increase to mountain dimensions. The coast farther up presents a mixture of these two water-eroded forms and narrow alluvial plains up to the region of The Heads, Oregon. North of the latter to about Aberdeen, Washington (an alluvial area) there is a system of complex hills, 50% of the coast exhibiting wind-formed

dune hills. From this point north to the Aleutians the coast exhibits mostly stream eroded mountains having tidal ranges in excess of 10 feet. Some narrow alluvial plains are found, as between Yakutat and Cordova, Alaska. In general, however, the coast north of San Francisco is sparsely populated and is used by a significant number of recreationists at only a few points.

Composition of Recreational Beaches: Following an oil spill disaster, the priority in damage control and renovation operations will logically be assigned to bathing beaches. These are typically quartz sand beaches in the continental U.S., the Florida Keys (coral sand predominates) being the only significant exception. In certain parts of the U.S. bathers do use shingle beaches (e.g., Long Island Sound) but perhaps without great enthusiasm.

The term sand beach is misleading in that it implies that the beach material is totally sand. This might be nearly true with some berms but only if nature happens to favor the situation and man cleans the bermal zone frequently with motorized rakes. The foreshore area, however, is typically littered with shingle or gravel, shell debris, drift trash, stranded marine vegetation, and (in many parts of the country) tar deposits of unknown origin. The relative occurrence of such materials will depend on many factors of course and cannot be predicted. Because of the classifying effect of the swash and backwash (Ref. 13 and 14), it is probably safe to expect that the upper reaches of the foreshore will contain much less than 25% imbedded gravel and shingle, and usually very little of the latter. This is the zone where oil deposition is most likely to occur.

THE NATURE OF THE PROBLEM

The Properties of Petroleum Deposits: Useful information on this subject was found in a number of documents (particularly Refs. 2, 3, 9, 10, 22 and 25). It was also obtained from various individuals involved in the Santa Barbara (local crude), Rehoboth Beach (bunker C), San Juan (Leona crude) and Canal Zone (bunker C and diesel oil - 3:1) spills.

The scope of this review was restricted to spills in which the released petroleum contained a significant residual oil content. Crude and bunker oils are the predominate cargoes of tank ships and, in any case, distillate-fuel spills would probably not require the application of the type of equipment considered on this program[3].

Spills will usually arise from a distressed tank ship, barge, drilling platform, drilling ship, or possibly a shore facility. Because mixed

[3] Distillate fuels penetrate even wet sand to form loosely caked masses which quickly disperse due to wave action and evaporation.

cargoes (e.g., the WITWATER off Galeta Island, C. Z.) or very light crudes may be released, a low residual oil content in the slick must be anticipated. Heavy seas are also likely to be running to have caused the carrier's distress. This might result in some emulsification of the oil and the casting of it onto backshore zones[4]. Depending on the time the slick was carried at sea and the ambient temperature (water and air), the oil will lose volatiles and tend to congeal. When stranded on the beach it accumulates at the swash zone in windrow-like patterns or in liquid patches, depending on its viscosity. The tidal area washed by the surf is usually free of such deposits. In the absence of applied (damage control) detergents, the fluid or plastic contaminant usually penetrates the foreshore very little unless the sand is coral-derived. Due to wave action, sand will collect on oil deposits and suggest the appearance of an oil penetration. In cold weather (e.g., Rehoboth Beach), bunker oil may become plastic very quickly and form rigid deposits several inches thick. At warmer San Juan, the OCEAN EAGLE's Leona crude (60-66% residuals) was estimated to have undergone congealment on the beach within about 24 hours. Rapidly congealing oil will usually not adhere to drift trash and the use of absorbents or adsorbents is not warranted. Deposits that are fluid for a time represent the opposite case and clean-up must also include the removal of oil-soaked driftwood and any applied sorbents (straw, mineral products, etc.). A special case that arises is the presence of kelp or sea grass. The former will usually not acquire any oil if it is fresh; this is not true if the kelp is dead and dried out. Sea grasses apparently act as good oil-accumulators regardless of their condition. The easily collected patches of sargassum on the Puerto Rican beaches proved most helpful in expediting clean-up operations there after the OCEAN EAGLE disaster.

While the oil deposit is congealing to an asphaltic or tarry state and acquiring sand from wave action, it typically breaks up into streaky masses and/or forms small ball-like deposits. Some of this material may be returned to the sea by backwash and collect in runnels or troughs. This process apparently also operates if the oil is emulsified (water in oil) when stranded. Natural emulsions appear to break rapidly under the influence of sunlight and the presence of a solid phase. The persistence of detergent-promoted emulsions of the oil in water type ("chocolate mousse") is apparently greater, as are the problem associated with its physical removal. Because of restrictions against the indiscriminate use of detergents, this type of emulsion will not likely be encountered on this country's shores.

Within about 24 hours following the stranding of the last material from an offshore slick, an oil-contaminated beach can usually be worked mechanically. The deposits and any oil-soaked sorbents or trash

---

[4] At Rehoboth Beach, Delaware, for example, bunker oil from the beached barge, HESS HUSTLER, reached the board walk and even a parking lot.

should be picked up, with a minimum of sand, using combinations of road-graders, front end loaders, bulldozers, and even laborers equipped with rakes, shovels and pitchforks. The collected material can then be loaded into trucks for disposal elsewhere or, in the present context, be fed into on-site renovation equipment to give back to the beach a cleaned sand.

The fuel value of the outloaded material varies considerably, depending on the nature of the spill and the expertise practiced in removing the deposits. At Rehoboth Beach, for example, the crews were inexperienced and initially were depleting far too much of the valuable sand inventory. This situation was corrected by the FWQA oil spill coordinator and it was believed that the outloaded material thereafter contained, on the average, about 20% petroleum residues. The Public Works Department of the Commonwealth of Puerto Rico conducted a beach sampling program. A geologist and a laboratory technician collected samples from various beaches despoiled by the OCEAN EAGLE cargo. These were taken from within several weeks to several months after the incident and included samples of apparently unpolluted as well as heavily polluted sand. These samples were analyzed by the Commonwealth for moisture and oil content, the balance being expressed as sand and sargassum. The geologist, L. Hyman, was interviewed to determine if the samples would resemble material outloaded if the same areas were subjected to clean-up by excavation. She felt that the compositional correlations would be good, provided that the beach areas had not been subjected to detergent treatment. Generally, the samples were taken to include about a 2-in. depth, although lesser and greater depths were employed if the oil layer was thin or if oil-sand layering had occurred, respectively.

An example of the data obtained by the Commonwealth workers is shown in Table 4, which represents the first sampling effort. This occurred just two weeks after the breaking up of the OCEAN EAGLE on 3 March 1968. The area sampled involved about 20 miles of prime recreational beach area of the north (El Dorado) coast of Puerto Rico from Punta Salinas, which is about 3 or 4 miles east of the mouth of San Juan harbor, east to Puerto del Tortuguero. The great variability in the moisture content probably only reflects the position of the sample site with respect to the surf and tidal conditions that happened to exist at the time of sampling.

It should be mentioned that as a result of the OCEAN EAGLE spill (3 to 3-1/2 million gals. Leona crude oil), 13,000 cubic meters of material had to be removed from the Puerto Rican beaches and dumped at distant disposal sites. Fresh sand fills were required in many places[5].

[5] Particularly the Condado resort hotel beaches where the use of detergents resulted in serious beach erosion.

TABLE 4

Composition of Oil-Contaminated Beach Samples (Puerto Rico)

Beach Area	H_2O, wt-%	Oil, wt-%	Balance (Sand, etc.) wt-%
Laguna Tortuguero	0.4	43.9	55.7
Dorado Hilton Hotel	2.2	1.4	96.4[1]
Playa Cerro Gordo	8.8	48.0	43.2
Playa Cerro Gordo	40.4	13.2	46.4[1]
Playa Cerro Gordo	29.8	60.9	9.3[1]
Dorado Beach Hotel	77.4	8.5	14.1[1]
Fuente al Compamente Tortuguero	28.2	54.7	17.1[1]
Dorado Hilton Hotel	10.3	7.3	82.4
Dorado Hilton Hotel	20.4	13.4	66.2
Dorado Hilton Hotel	40.8	5.0	54.2[1]
Dorado Hilton Hotel	16.3	6.8	76.9
Punta Salinas	11.0	12.5	76.5[1]
Playa Brenas	25.9	8.1	66.0
Playa Brenas	17.7	2.7	79.6
El Umice Restaurant	14.4	6.8	78.8
El Umice Restaurant	13.4	0.3	86.3[2]
Levittown	14.4	6.8	78.8[1]

[1] Sargassum present in sample.

[2] No visual evidence of oil contamination.

Some of this material had to be brought all the way up from the South Coast of Puerto Rico.

Beach Material Excavated: An important factor in designing on-site renovation equipment is the amount of contaminated beach material that must be removed in order to leave a clean shore line. It can reasonably be assumed that this quantity would also represent the amount of feed material that would have to be processed for the same area by a combustive sand cleaner. Data of this type were not available in a readily interpretable form from any of the sources consulted during the present task. Fortuitously, however, an FWQA program on beach renovation has been concurrently pursued by the URS Research Company of Burlingame, California. Their work included a detailed analysis of the characteristics and capabilities of various types of earth-moving machines for outhauling oil-spoiled shore material. Based on field test work, estimates were generated as to the volume of sand that would have to be picked up under different beach conditions using preferred types of earth movers. These data (Ref. 34) are shown in Table 5. The areas employed for these tests were Francis Beach, Tunitas Beach, and Half Moon Bay Harbour Beach, all on the San Mateo Coast of California. They were selected as having about the full range of sand packing characteristics that would be encountered on recreational beaches. The data represent an averaging of the excavation test results obtained at all three of the beaches.

TABLE 5

Sand Removal Required for Beach Renovation as Estimated by URS Research Co.

Procedure	Sand Removed, Cu Yds/Acre		
	Backshore	Intertidal Zone	Firm Beach with Straw[1]
Motor Grader and Elevating Scraper	130-145	70-100	180-200
Elevating Scraper	300-400	200-250	-
Motor Grader and Front End Loader	-	300-325	-
Front End Loader (tracked)	800-1200[2]	-	-

[1] Approximately 100 bales/acre.

[2] Based on beach where a motor grader or scraper could not operate because of poor bearing capacity.

Assuming that a strip 20-ft wide is removed, it can be seen that anywhere from 170 to 2900 cu yds of material will have to be removed per mile of beach. This, of course, would depend on the type of equipment used and the zone from which the material is removed. A majority of the contaminant can be expected to collect on the hard packed intertidal zone, however. Thus, if the optimum excavation procedure is used (motor grader and elevating scraper), the removal and cleaning of 38 to 53 tons per hour would be equivalent to cleaning one mile of beach per 8 hr work day. This is based on a moist sand density of 125 lb/cu ft (Ref. 35), which is somewhat conservative in that the presence of oily deposits would reduce the density. Of course, if a swath wider than 20 ft must be removed, which would probably involve some backshore material, a corresponding increase in the outloading rate would be necessary to realize the same linear rate of clean-up.

The presence of straw can be neglected in this calculation. Although it would increase considerably the volumetric bulk of the material that needs to be outloaded, this would not influence the sizing of the combustive renovation equipment. At typical input temperatures, the inloaded straw, even if wet and oil-free, would burn down so rapidly that system congestion could not occur.

Natural Recovery of Oil Contaminated Beaches: Considerable loss of tourist revenues can occur if oil-spoiled recreational beaches are not quickly restored. In the case of shores that are little used, because of their structuring or inaccessibility, the question arises whether clean-up operations need be employed at all. Experience has shown that the combined effects of wave action and animal activity will result in the eventual rehabilitation of an oil-contaminated beach. What, however, is the overall effect on the biota if petroleum residues are allowed to disappear in this manner? The consensus (e.g., Ref. 17 and 18) appears to be that little permanent damage occurs when oil residues are left on shore areas and that nature manages to adjust to all aspects of the situation. This opinion was expressed by many of the officials and engineers contacted on the field survey and was vividly corroborated by an inspection of the spill site at the Atlantic mouth of the Panama Canal.

The small tank ship WITWATER released about 800,000 gallons of bunker and diesel oils there on 13 December 1968. Most of this oil accumulated in the region of Galeta Island and Fort Randolph. This region features a mixture of mangrove swamps, coral-sand beaches, riprap breakwaters, sea walls, and shingle beaches. The areas hardest hit by the spill were inspected in August 1969 with the knowledgeable guidance of Dr. P. W. Glynn, marine biologist of the Smithsonian Tropical Research Institute. With the exception of the Galeta Island lagoon, where some oil-soaked drift trash had been removed, no renovation had been attempted other than to burn down and pump off the encroached heavy slick.

The animal and plant life of the area was prolific and obviously quite healthy. The feared poisoning of the mangrove trees through their feeder roots had not eventuated. The occurrence of marine animals — chitons, crabs, sea urchins, and many varieties of tropical fish — was abundant. With the exception of a (useful) paving of asphalt atop the sea wall, some patches of hardened tar high on the riprap barriers, and some occasional oil-contaminated trash on the backshore side of the sea wall, there was surprisingly little evidence of oil. There was also no sign of oil on the bottom of the offshore shallows, where the clarity of the sea water was exceptional.

Dr. Glynn expressed the opinion that most of the oil was removed by wave action and the activities of chitons and micro-organisms. A similar appraisal was later made by Dr. P. G. Mikolaj (University of California, Santa Barbara) concerning the natural recovery of the rockeries and other zones near that University which were not cleaned after the Santa Barbara oil disaster.

USE OF COMBUSTIVE TECHNIQUES IN RENOVATION OPERATIONS

Cornish Coast, England: Butane- or propane-fueled torches were used in an attempt to cleanse sea walls. This resulted in an apparently clean surface, which, on closer examination, proved to have resulted from the thermal exfoliation of the concrete surface. Recovered particles were found to have (partially carbonized) tarry deposits still intact on the face of the fragments. The method was abandoned, but apparently because of its cost and slowness rather than its obvious destructiveness. Other combustion attempts employed were aimed at firing the main slick, pockets of oil entrapped on the beach, and the TORREY CANYON herself. Only the incendiary bombs dropped on the ship, which caused confined burning of the oil, proved to have any significant results.

Santa Barbara, California: Weed-burning torches were employed in an attempt to clean rocky areas. This was soon abandoned because a black veneer-like coating persisted on the surface of the rocks which resisted all subsequent removal efforts.

Another device tested there was a truck-mounted contraption for augmenting the combustion of piled, oil-contaminated, drift trash. Considerable amounts of this material accumulated on the beaches after untimely heavy rainstorms caused disastrous flooding in nearby inland areas. Heaps of this storm debris were collected and fired; these piles burned very slowly and emitted considerable quantities of objectionable smoke. The device pressed into service consisted of a directional blower and fuel-squirting assembly. Diesel oil was intermittently played onto the smoldering piles through an 1/8-in. nozzle. The blower was directed onto the combusting mass. The distance maintained between the truck and pile is not accurately known, nor are many other operational details. The net effect was that the burns were greatly accelerated and the bulky masses reduced to residues which were disposed of much more conveniently.

Rehoboth Beach, Delaware: A military type flame-thrower was employed here in the hope of igniting and burning off the thick deposits of Bunker C oil stranded on the beach; this proved ineffectual.

San Juan, Puerto Rico: Torches were also investigated here. Detailed information concerning the type of equipment employed could not be obtained. The attempt, however, was described as fruitless.

Galeta Island, Canal Zone: A boom-entrapped slick, about 4-in. thick, was augmented with kerosene and straw (wicking), then fired. About 75% of the oil burned off before sustained combustion became impractical. The thickened residue was then pumped off, using a vacuum tank truck, and poured into a prepared pit where it was again laced and ignited. It burned down to leave a residue that could be covered with earth.

CONFIGURATIONAL CONSIDERATIONS

Benefits: Based on the foregoing discussion, it was believed that the most valuable functions to be fulfilled by a beach renovation device (based on the combustion principle) would be as follows:

- Utilize energy available from contaminant to return sand to its original condition.
- Eliminate costly loss of sand inventories resulting from disposal operations.
- Eliminate expense of hauling out spoiled sand to distant dump sites.
- Reduce equipment and support requirements by confining renovation operations to immediate contamination area.
- Concomitantly dispose of or burn down oil-soaked drift trash and sea plants fouling the stricken area.

Application Constraints: As previously suggested, the in-place combustive renovation of oil-contaminated beaches appears to be impractical. This argument is supported by thermodynamic arguments contained in the next section. It would be necessary, therefore, to isolate (excavate) the superficially deposited contaminant with a minimum of mechanically occluded substrate from the heat sink (sand-water column) and incinerate the mixture in a nearby device. Because the art involved in accomplishing the collection operation is somewhat demanding of even an expert operator of earth-moving equipment, the idea of coupling together the excavator and appropriate combustion equipment to form a completely mobile system appeared to be unfeasible unless and until better-designed oil-collectors could be developed.

The degree of mobility[6] of the incinerator system would obviously be predicated on its size, configuration, and functional characteristics. Delivery of the system to a disaster site should be as rapid as possible. Because it must be anticipated that only a few or even only one of these devices might be available and at a great distance from the site, air transportability would be a desirable capability.

The scene of operation of the envisioned incineration device would be the accessible recreational sand beach. Material fed to it would be highly variable in composition. The primarily desired output would be clean, oil-free sand having the same appearance as the original uncontaminated sand. The management and fate of larger input ingredients, from gravel up to large pieces of driftwood or masses of vegetable matter, would, of course, constitute an important design consideration.

[6] Either by virtue of being self-propelled or of being capable of being drawn with or without some preparatory dismantling.

SECTION V

COMBUSTION CONSIDERATIONS

THEORETICAL ANALYSIS

Introduction: Two basic arrangements emerge in visualizing the combustion of oil-contaminated beach material. One is the in-place approach, wherein a flame is applied to stranded deposits until the latter are completely dispersed in the form of volatile combustion products. As pointed out in Section IV, attempts at using this method after actual spills has not proved successful. The other, more logical, procedure is to remove the contaminated material with some underlying clean sand and process it through a combustive device, again burning all of the petro-contaminant to residue-free gases.

Ideally, the in-place method would be applied to deposits that are conveniently arranged on the surface of the beach with no covering sand interposed. In this situation, the system may be treated as a semi-infinite solid. In the other approach, we can consider the use of a machine that affords a separation of the dirty sand grains as much as possible and allows them to flow, cascade, or be driven by a conveyor in the presence of a hot gas stream containing available oxygen.

Semi-Infinite Solid: Let it be assumed that a flame containing excess air is played at some fixed velocity on a layer of contaminant lying on the sand. The surface exposed to the gas may further be assumed to have already lost its volatile constituents in the heating process or by prior weathering. The surface now consists of pitch or asphalt of a density of about 80 lb/cu ft. As the gas impinges turbulently on this surface, oxygen is transported through the stagnant gas film to the carbon monoxide. The surface concentration of oxygen can be assumed to be zero, because the reaction rate of oxygen with carbon is very fast at 1000°F and above.

It is further assumed that the applied gas has a linear velocity of 10 ft/sec and is produced by burning a hydrocarbon fuel with 150% excess air leaving 12% oxygen in the gas (0.12 atmospheres), which is at 1800°F. If the contaminant surface is at 1000°F, the mean film temperature will be about 1400°F. The gas density, viscosity, and the diffusion coefficient of oxygen through a stagnant film of nitrogen were evaluated for these film conditions. A characteristic length, d, of 1.0 ft was chosen and the corresponding Reynolds and Schmidt numbers computed. The generalized correlation presented by Treybal (Ref. 36) was used to compute the mass transfer coefficient, j_D, for flat plates, and hence the rate of oxygen diffusion, N_{O_2}, was obtained from:

$$k_G = j_D G_M / p_{BM} S_c^{2/3} \qquad (1)$$

and

$$N_{O_2} = k_G p_{O_2}, \text{ lb moles/sq ft-hr} \quad (2)$$

where: k_G is the mass-transfer film coefficient,

G_M is the mass flow rate of gas, lbm/sec-sq ft,

p_{BM} is the mean inert gas pressure in the film,

S_c is the Schmidt number, and

p_{O_2} is the difference in the partial pressure of oxygen across the film (0.12 atm).

The results of the calculation (Case 1, Table 6) show that 1.32 lbs of carbon/hr-sq ft are consumed. Because petroleum asphalt has an approximate density of 80 lb/cu ft, the regression rate of the surface is 0.108 inches/hr. This rate is so slow that an extremely high fuel consumption would obviously be required to make the process feasible.

Combustion Around Individual Sand Grains: Let it be assumed that a 20-mesh (coarse) sand of spherical particles 0.05 in. diameter is used and each sphere is coated with a layer of asphalt 0.01 in. thick, and a column of coated sand one foot in diameter is considered. Hot flue gas at 1800°F flows through the column, which is to have a uniform temperature from top to bottom. The gas composition and other properties are considered to be the same as in Case 1; i.e., a particle surface temperature of 1000°F and a mean gas film temperature of 1400°F. In this case (Case 2) the length applicable for the Reynolds number is the particle diameter (0.05 inch). Using the correlation curve for mass transfer to spheres (Ref. 36), oxygen reaches the carbon surface at 0.90 lb moles/hr-sq ft of particle area. Since each sand particle has an area of 54.9×10^{-6} sq ft and each particle contains 2.04 mg of carbon, it will require 8.7 sec to consume all of the carbon (see Case 2).

Additional computations were made to find the effect of mass velocity and of temperature. If the velocity were increased four-fold to 40 ft/sec (Case 4), then only 3.3 sec would be required to remove the deposit. If the film temperature were dropped to 700°F, keeping the initial 10 f/sec gas velocity (Case 3), then 6.0 sec would be required; but 700°F is so low a temperature that chemical reaction rates would probably become the controlling factor rather than gas diffusion.

In general, one may conclude that, if oxygen diffusion is the controlling process, carbon burn-off will increase with: (1) decreasing particle diameter; (2) increasing gas mass-velocity, and increasing oxygen content in the stream. Heat transfer to the particle is also important because the surface must be brought up to the combustion temperature. In the absence of detailed calculations, it can be assumed that heat

TABLE 6

Summary of Theoretical Combustion Calculations

	Case 1	2	3	4	5
Gas velocity, ft/sec	10.0	10.0	10.0	40.0	10.0
Conc O_2, atm	0.120	0.120	0.120	0.120	0.120
Gas Temperature, ^{o}F	1800	1800	1800	1800	1800
Gas density, lb/cu ft	0.0193	0.0193	0.310	0.0193	0.0193
Film temperature, ^{o}F	1400	1400	700	1400	1400
Viscosity (film), cp	0.046	0.046	0.0320	0.046	0.046
Viscosity (film), lbs/ft-hr	0.111	0.111	0.0773	0.111	0.111
Reynolds No. (Re''')	6.300	33.4	77.0	133.6	1.036
Gas mass velocity (G), lb/hr-sq ft	-	890	1430	3.560	890
Molecular diffusivity (D_{O_2}), sq cm/sec	0.181	0.181	0.181	0.181	0.181
D_{O_2} (at film), sq ft/hr	4.00	4.00	2.80	4.00	4.00
Schmidt No. (S_c)	1.43	1.43	0.892	1.43	1.43
Mass transfer coefficient (j_D)	0.0090	0.30	0.20	0.20	0.060
Gas molar mass velocity (G_M), lb-mole/hr-sq ft	25.0	31.8	50.6	127.2	31.8
Mass transfer film coefficient (k_G)	0.459	7.50[1]	10.9	20.0	1.49
Oxygen diffusion rate (N_{O_2}), lb-mole/hr-sq ft	0.0550	0.90	1.31	2.40	0.180
Carbon combustion rate, lb/hr-sq ft	1.32	21.6	31.6	57.6	4.3
Carbon regression rate, in./hr	0.108	-	-	-	-
Laminar burning time, sec[2]	360	8.65	6.0	3.3	43.8

[1] This mass transfer film coefficient value is for k_y, which does not express the p_{BM} included in k_G.

[2] Time required to burn through a layer of carbon 0.01 in. thick.

transfer to each particle will be of the same order of magnitude as mass transfer, so that for Case 2 an additional 8.7 sec would be required to heat the particle to 1000°F. The overall combustion process would then require 17 sec, at a minimum.

An important aspect of the process is the loss of vaporized hydrocarbons from the particles. This flow obstructs the counter-flow of oxygen to the surface and also results in combustion above the particle. This process must be nearly complete before the removal of the carbonaceous residue can be accomplished; it is not possible to compute this time interval, except to assume that it too will require 10 to 20 sec. Therefore, a total period of as long as one minute retention may be required to complete the combustion process for Case 2.

Whether the renovation effect can be achieved under the imposed process-rate constraints will obviously depend on the design of the apparatus used to effect combustion. The use of countercurrent flow or of fluidized bed combustion, for final clean-up, are suggested as possible means of accomplishing this. Then, too, it should be remembered that most incineration processes almost unavoidably involve a feed preheating stage. This would help reduce the required residence time at combustion conditions by effecting a portion of the required heat transfer and promoting the release of some of the volatiles from the material.

It should be pointed out that the presence of agglomerates of tar and sand much larger than 20 mesh cannot be tolerated because of the greatly increased time required to burn off the tar. For example (Case 5, Table 6), the time to burn an aggregate ball 2.0 inches in diameter (assumed to be mostly tar) is computed. The temperature of the film is the same as Case 2. Not only is the rate of oxygen diffusion to the surface slower than for Case 2, but the time to burn the 1-inch thickness, which will consume the agglomerate, is 4,380 seconds. In order that no such aggregates of oil or inerts are present in the final heating of the same, some practical means of separating and/or intimately mixing most of the oil and sand must be devised. Probably the most practical is to heat the incoming mixture until the oil has a low viscosity and either coats or drains away from the sand. If this were done, the sizing of the inert granular phase would not be critical, since the oil-film thickness developed on the particles would be about the same in all cases.

THERMODYNAMIC CONSIDERATIONS

Sand Composition: It is not possible to generalize on the range of compositions that must be anticipated in renovating oil-contaminated sand by combustion techniques. The data obtained from the Public Works office of the Commonwealth of Puerto Rico do, however, appear to furnish practical guidelines. These data are summarized in Table 7. Unlike Table 4, which furnishes data only for the earliest (17 March 1970) sampling performed, Table 7 averages the data for nearly all beach samplings made up to 15 April 1968. Excluded are four "control"

samples described as having "little evidence of contamination." These four samples were all sargassum-free and contained an average of 11.2 wt-% moisture. It is noteworthy that, in spite of a clean appearance, they were still found to have an oil content of 1.9 wt-%.

TABLE 7

Average Composition of Beach Samples Taken in Puerto Rico After OCEAN EAGLE Incident

	All Samples	Sargassum-Containing Samples	Sargassum-Free Samples
Water, wt-%			
Max.	79.7	79.7	25.9
Min.	0.4	2.2	0.4
Avg.	26.0	33.2	13.4
Oil, wt-%			
Max.	60.9	60.9	48.0
Min.	1.4	1.4	7.3
Avg.	16.7	17.1	16.3
Balance, wt-%			
Avg. (by diff.)	57.3	49.7	70.3
Number of Samples	33	21	12

It can be seen from Table 7 that the average oil content of all samples (16.7 wt-%) is in reasonable agreement with the estimate (20 wt-%) hazarded by FWQA Oil Spill Coordinators for the sand outloaded after the HESS-HUSTLER spill at Rehoboth Beach, Delaware.

It is apparent from the moisture data that most of the samples had been taken from the wet foreshore region, and some perhaps even exhibited a supernatant phase. This was verified in a simple test performed with beach sand obtained from Playa del Rey, California, the characteristics of which are described later in this report. A sea water saturated column of this material was briefly drained (by decanting) and found to retain water in the amount of 11.0 wt-%. This agrees with the average for the sargassum-free samples (13.4 wt-%) shown in Table 7 and the value mentioned earlier for the four (apparently) uncontaminated samples (11.2 wt-%) regarded as controls in the Puerto Rican samplings. The higher moisture contents found in the sargassum-containing samples must almost certainly have been due to the water in the vegetable fraction.

Heat Capacities: The heat (H) that must be supplied the oil-covered sand to achieve the temperature for complete combustion at film temperature (1400°F) is:

For water (including the heat of vaporization) from 77 to 1800°F[7]

$$H_T - H_{77} = 1,135 + 9.18\ (T-212) \qquad \text{Btu/lb}$$

For the sand, over the same range,

$$H_T - H_{77} = 0.325\ (T-77) \qquad \text{Btu/lb}$$

With the exception of Case 3, T will be 1800°F for water, but only 1000°F for sand, due to the difference in the solid and gas temperatures. Because of this and the disparate heat capacities of steam and sand, the heat contents of the two components at combustion conditions will be about 50 times greater per lb of water than for a like amount of sand.

For the oil, the net heat of combustion, water as vapor, for various oils does not differ greatly. Thus, the net heat of combustion to be used from API gravity is:

API Gravity	Btu/lb
10	17,400
30	18,200
60	18,900

Based on the Puerto Rico data given above, the energy balances for possible oil-sand-water mixtures calculate as shown in the following table.

The assumed bulk gas temperature.

TABLE 8

Theoretical Energy Balances for the Adiabatic Combustion of Various Oil-Sand-Water Mixtures

Mixture	Water, wt-%	Oil, wt-%[1]	Balance, wt-%[2]	Required Heat Input, Btu/lb of Mixture
A	79.7 (Max)	1.4 (Min)	18.9	+ 12,342
B	0.4 (min)	60.9 (Max)	38.7	- 10,174
C	26.0	16.7	57.3	+ 1,418
D	33.2	17.1	49.7	+ 2,459
E	13.4	16.3	70.3	- 454
F	6.0	18.6	75.4	- 1,993

[1] The net heat of combustion of the petroleum fraction is assumed to be 12,000 Btu/lb.

[2] Assumed to be sand.

These data do not of course consider systemic heat losses and other important process-heat factors. They do demonstrate, however, that the energy demand can change considerably with compositional variations in the input material.

Of the mixtures considered in Table 8, A and B are intended as extreme cases. Here the minima and maxima for oil and water contents found in the Puerto Rico samplings have been arbitrarily combined. In the actual beach material tested, the driest sample taken did not, of course, exhibit the highest tar content as well, or conversely.

Mixtures C, D, and E are based on Table 7 averages calculated for, respectively, all of the samples (C), sargassum-containing samples (D), and sargassum-free (E) samples. It is interesting to note that the last mixture, perhaps the most typical that can be expected, has a net energy balance suggesting that no added heat would be necessary to support combustion. This value, however, can only be regarded as an encouraging indicator in that the performance of an actual incinerator will be far from adiabatic. In these calculations no credit was taken for the heat of combustion of sargassum. The concentration of this weed was only determined for a limited number of samples by the Puerto Rican workers and not at all in the case of the data summarized in Table 7. Thus, in assuming that the balance of material is sand, a conservative energy value is obtained.

It can be seen from these data that the operation of an incineration system based on worst-case thermal demand (Mixture A) would be unattractive in cost. Assuming equipment heat losses of about the same magnitude as the heat input required by the charge, Mixture A

material could easily require an equal weight of fuel to renovate combustively. It will be desirable to avoid altogether any charging of the renovator with sand that is very wet. A possible pre-processing technique that might have to be practiced would be to pile wet, contaminated material near the combustor and allow it to drain for a time before being processed.

A test was performed wherein 3 lb of Playa del Rey Beach sand were saturated with sea water, briefly drained and deposited on 100 lb of dry sand[8]. This material was stored in an air-conditioned room at 70°F so that evaporative moisture loss would be small. Core samples were removed from the wet cake over a period of 24 hours. Figure 2 shows that the water loss was by far the greatest during the first hour, when almost half of the water passed down into the supporting dry sand column. This degree of drying by such a simple operation would doubtless be quite advantageous in achieving optimum performance from any combustive renovator envisioned. Assuming utilization of this effect, a mixture F was included in Table 8. This composition is based on the assumption that Mixture E had been "naturally" dried, as just described, to a material containing 6.0 wt-% water. It can be seen that over a 4-fold increase in energy content results.

Additionally, fuel demand can be considerably reduced by predrying the feed in a section of the incinerator operated, preferably regeneratively, at a temperature well below that of the combustion chamber. Figure 3 illustrates this, again for the case of an adiabatic effect. The two curves represent the compositions of sand-oil-water which are balanced-energy systems. Thus, the area above the curves involves compositions that would theoretically combust without fuel augmentation, while the areas below involve the opposite situation. It can be seen that when the heat content for the contained water is reduced by lowering its process temperature from 1800° to 500°F, a significantly smaller amount of oil is required to support adiabatic combustion. At 13% moisture, for example, the amount of oil needed to provide self-sustained combustion is one-third less.

EXPERIMENTAL STUDY

Materials: A request for samples of bunker fuel oil (BFO) and crude oil was made to Mr. Harry Morrison, Vice President and General Manager of the Western Oil and Gas Association. A fifty-five gallon drum of each type oil was promptly donated to the program through the courtesy of the Union Oil Company. The crude oil provided was of Alaskan origin, having a residual oil content of about 40%. Sea water (320 gals) was obtained through arrangements made with the U.S. Naval Undersea Research and Development Center, Pasadena, California. This was also accomplished at no cost to the program.

[8] Moisture content of this material was 0.05 wt-% as received. It had not been subjected to any processing other than excavation from the open beach and packaging.

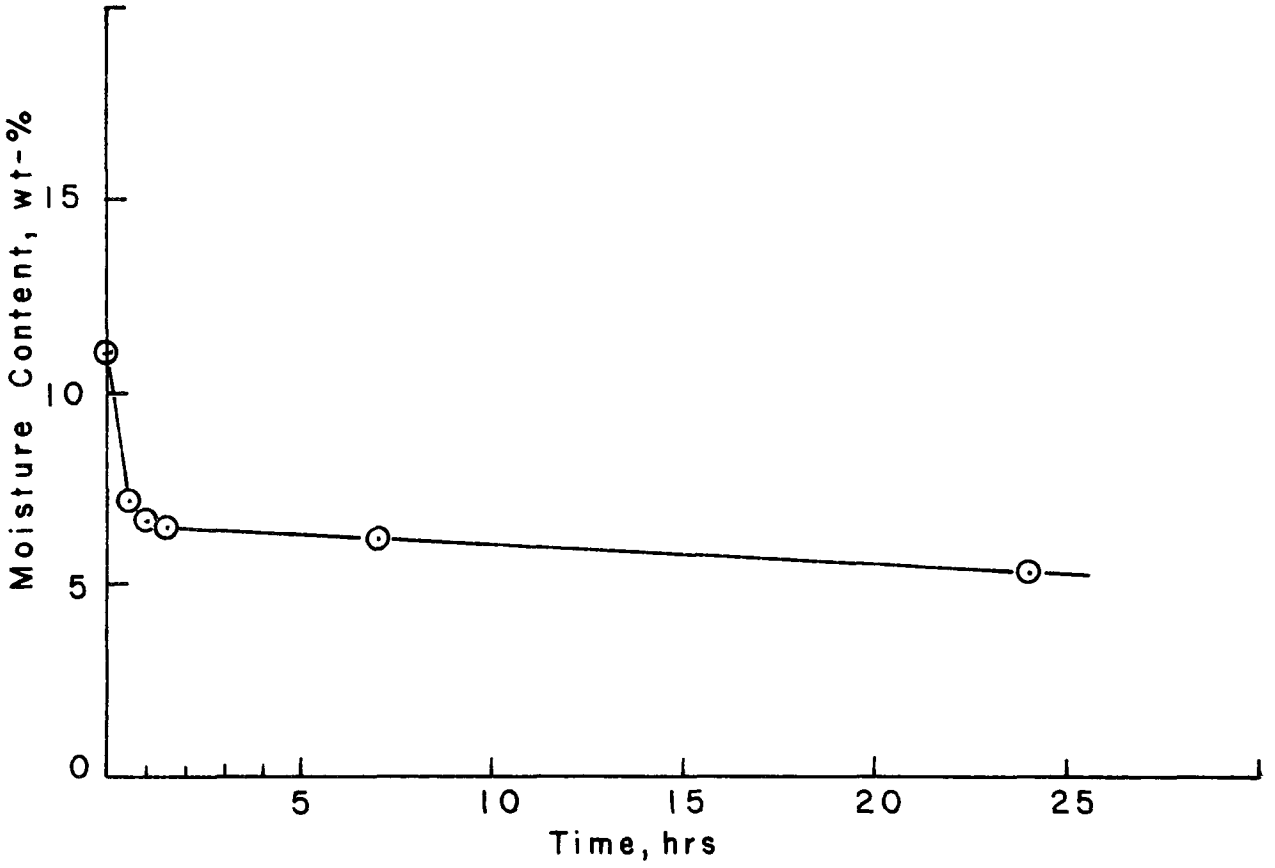

FIGURE 2. MOISTURE LOSS OF WET SAND BY CAPILLARY DRYING

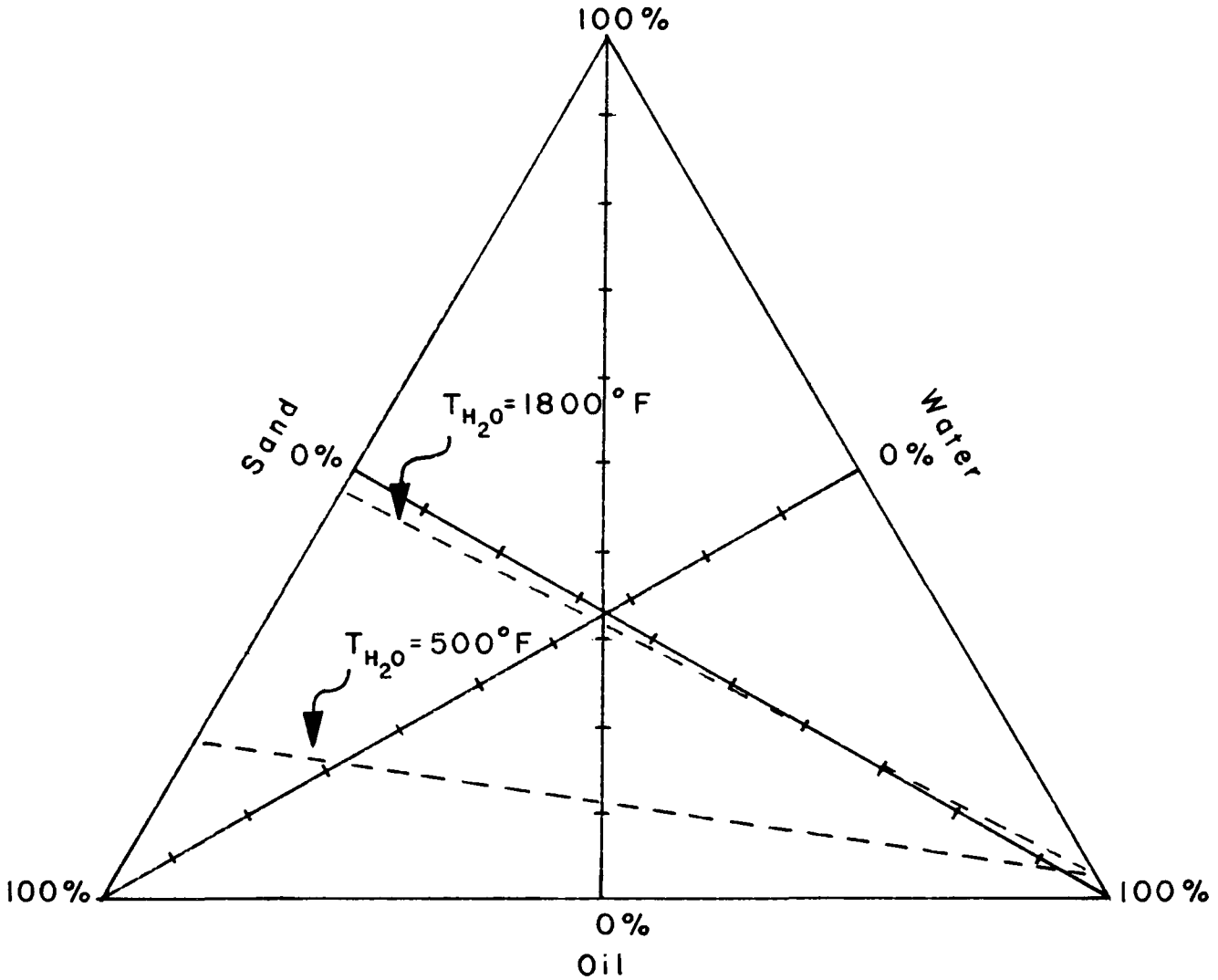

FIGURE 3. SAND-OIL-WATER MIXTURES FURNISHING BALANCED ENERGY CONTENTS IN ADIABATIC COMBUSTION

A ton and a half of beach sand was purchased from the El Segundo Sand Company. The material supplied was unprocessed material excavated from the beach at Playa del Rey, California. A sieve analysis (Table 9) run on this sand showed it to be predominately a medium sand, containing significant amounts of both coarse and fine sand (see Table 3).

TABLE 9

Sieve Analysis, Playa del Rey Beach Sand

Sieve Size, Tyler	% Retained	Min. Particle dia. Retained, mm
16	1.0	0.991
28	5.2	0.589
48	62.0	0.295
100	30.8	0.149
200	0.6	0.074
fines	0.4	-

Sample Preparation: Samples for combustor testing were prepared by placing 100 lb quantities of sand in cylindrical polyethylene tubs (23.5 in. dia x 10 in. depth), with and without added sea water, and spreading weighed amounts of oil over the bed. When sea water was added to the sand, the mixture was brought to a fully drained condition (moisture content ~11%) by tilting the tub and running off the excess water. The combustor tests were performed by Hirt Combustion Engineers. These tests were initially of a very basic nature and progressed to more definitive experiments.

PRELIMINARY TESTS

Test No. 1: Samples (20 wt-% BFO on dry sand - 8.33 lb/sq ft) were placed in a small container; heat was applied at the bottom. After a period of hours, during which the sample smoked vigorously, the sand became a hard coke-like mass. Complete cleaning of the sample proved virtually impossible in this mode of combustion.

Test No. 2: A sample[9] was placed in a container. An open flame burner was placed above the sand, positioned to fire onto the surface. A compressed air jet was also directed onto the surface. After ignition, only localized burning took place, with formation of clinkers.

Test No. 3: A sample[9] was piled onto a surface. An air/gas flame was directed onto the center of pile. Again, only localized burning took place; however, no smoke was apparent and the sand fused into a hard, glassy mass at the point of flame impingement.

[9]Of the same composition as used in Test No. 1.

Test No. 4: A 6-in. diameter shell was filled with oil-contaminated sand[9] and temperature probes inserted below the surface at 1, 3, 5, 7 and 9-in. depths. The end of the cylinder was then exposed to a direct flame from a burner. The temperature 1 in. below the surface took 20 minutes to rise from 70°F to 700°F; the temperature 3 in. below the surface rose to only 390°F in 20 minutes (see Figure 4). The purpose of this and Tests No. 2 and No. 3 was to verify the theoretical conclusion made earlier that in-place burning would be impractical. The time requirement, based on observed thermal conductivity, verifies this.

Test No. 5 (Series): After completion of the preceding tests, it was apparent that agitation of the samples would be required in order to promote rapid heat distribution. Tests were therefore conducted using the small, rotating (23 rpm) kiln device shown in Figure 5. It was fitted with a burner, firing into the open end, and a thermocouple probe for measuring solid phase temperatures. By preheating the interior of the device, an approximation of the effects that would be obtained from a continuous feed system could be simulated.

It was found in using this test apparatus that essentially three effects take place in the thermal-cleaning process. In the first stage, the asphaltic material softens at about 200-300°F and tends to coat all of the sand particles with a layer of oil. This is advantageous in that it causes the sand/oil mass to become rather fluid and thus relatively easy to handle. The time required for this change proved variable because it depends on the size and shape of the asphaltic lumps, oil/sand ratio, contact area, etc. Generally, one minute was sufficient to produce the transition in the samples[9] tested, when exposed to temperatures around 1600°F.

The second stage was found to consist of a volatilization or cracking (pyrolysis) of the oil fraction; at this point it was either burned off, if ignited, or escaped as an aerosol-rich vapor if no ignition source were present. There was no definite threshold between these first two stages; the combined processes took place in about two minutes even at relatively moderate temperatures (about 1000°F).

Upon completion of the second stage transition, the contaminated sand became a dry, black, loose mass; each sand grain was coated with a hard carbon residue. Removal of this carbon residue (decarbonization) proved to be the most difficult stage of sand cleaning, as predicted in the theoretical analysis.

Tests were conducted at temperatures from 900 to 1600°F, and samples removed at various levels of temperature. To simplify the operation, the sand was first brought to a stage 3 condition (dry, with a black carbon coating) prior to insertion into the machine. Figure 6 shows the results of these tests. The retention time decreased almost linearly as the temperature increased, basing process completion on a visual comparison of the product with clean sand. A residence time of one

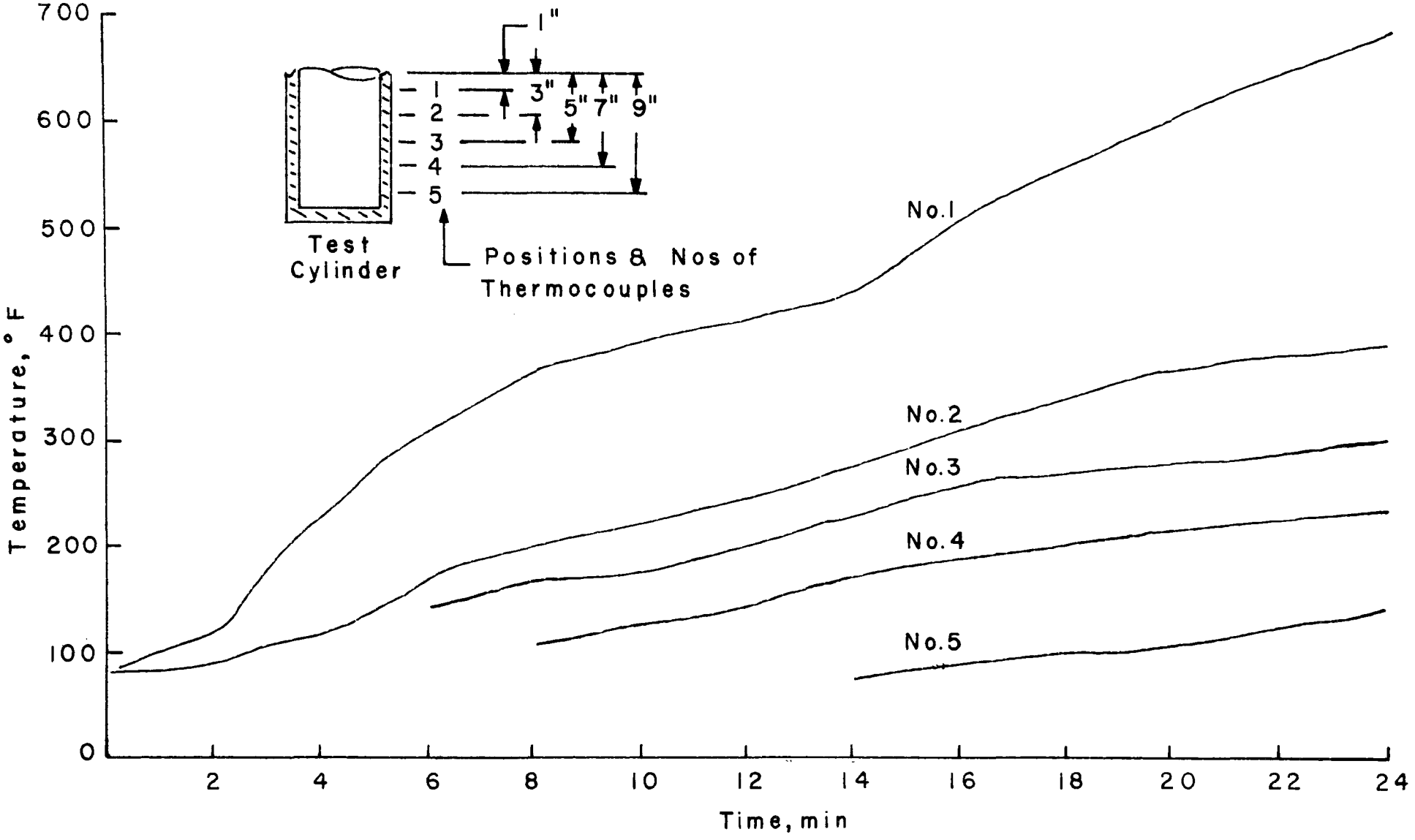

FIGURE 4. RATE OF TEMPERATURE RISE IN SAND-OIL COLUMN WITH IMPINGING FLAME

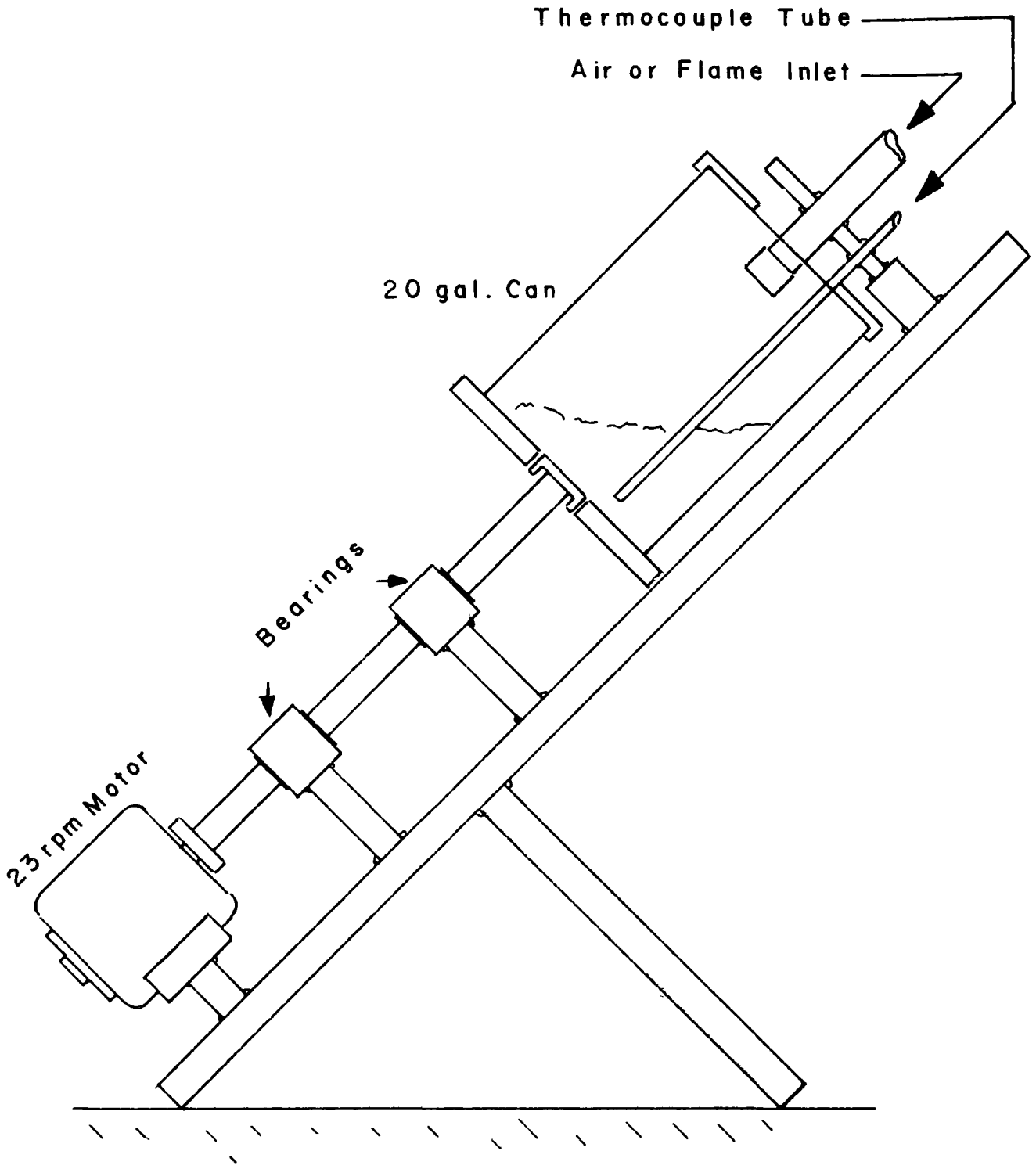

FIGURE 5. ROTARY KILN TEST APPARATUS

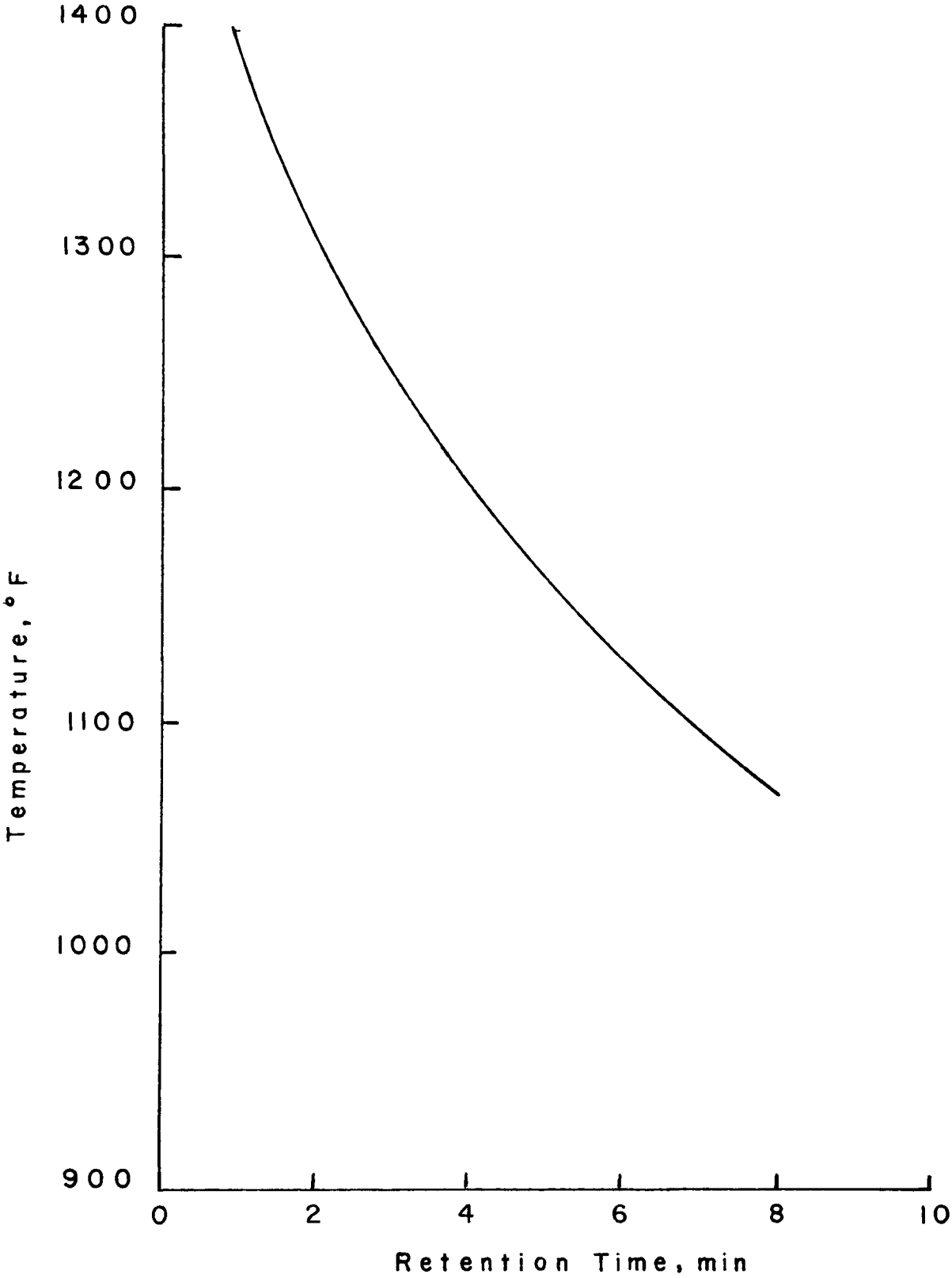

FIGURE 6. TIME-TEMPERATURE RELATIONSHIP IN CLEANING CARBON-COATED SAND

minute at 1400°F for complete combustion proved to be consistent with the prediction based on theory.

SUSPENDED PHASE TESTS

Test Equipment: Utilizing samples of stage 3 (carbon-coated) sand[10], tests were conducted to determine the time-temperature relationships involved in producing clean sand by entraining the material in a stream of hot air. The apparatus (Figure 7) used was a cyclone separator arranged so that a stream of hot air was drawn through a 10-ft horizontal run of 10.5-in. (dia) pipe into the cyclone and out the top through an exhaust fan. The sand was introduced into the air stream at midpoint in the pipe, where it became suspended in the gas, and traveled to the wall of the cyclone and then settled to the bottom of the cone. In order to prolong the retention of the sand in the cyclone, the bottom discharge port was left open so that cold air also entered at this point due to fan suction and caused the accumulating solid phase to be thrown turbulently back into the combustion zone. The SCFM of air introduced at the bottom port represented only about 2% of the total gas flowing into the cyclone. The following tests describe the results.

Test No. 6: As a preliminary investigation, about a pound of tar-contaminated sand[9] was injected into the entrance point of the hot air stream, which was maintained at about 1200°F. It fell to the bottom of the pipe, quickly shaped itself to the pipe contours and then ignited. It burned to a hard, black, coke-like mass covered with a thin layer of loose clean sand. There was no tendency for the loose sand to become entrained in the gas. It was concluded from this that the feed material would have to be in the Stage 3 form in order to be processed satisfactorily.

Test No. 7: Samples of Stage 3 sand were injected into the air stream, which was now maintained at 1300°F, and held suspended for various lengths of time after entering the cyclone. Clean sand was obtained in the many runs made after a residence time which varied from 60 to 300 seconds. Removal of a sample of the cyclone's contents was accomplished by plugging the bottom discharge port, fully opening the air valve and, after material had collapsed into the tail-piece, shutting the valve. When the plug was removed, several ounces of representative material would drop out of the tail-piece to be collected.

Test No. 8: Test No. 7 was repeated with the inlet gas at 1500°F. Clean sand resulted after a retention period which ranged from 10 to 90 seconds.

Test No. 9: Test No. 7 was again repeated, this time with the air stream at 1600°F. Cleaning was completed after a maximum of 40 seconds in the cyclone. The shortest retention time achieved (10 sec) was no better than that which was obtained at 1500°F.

[10] With the exception of Test No. 6.

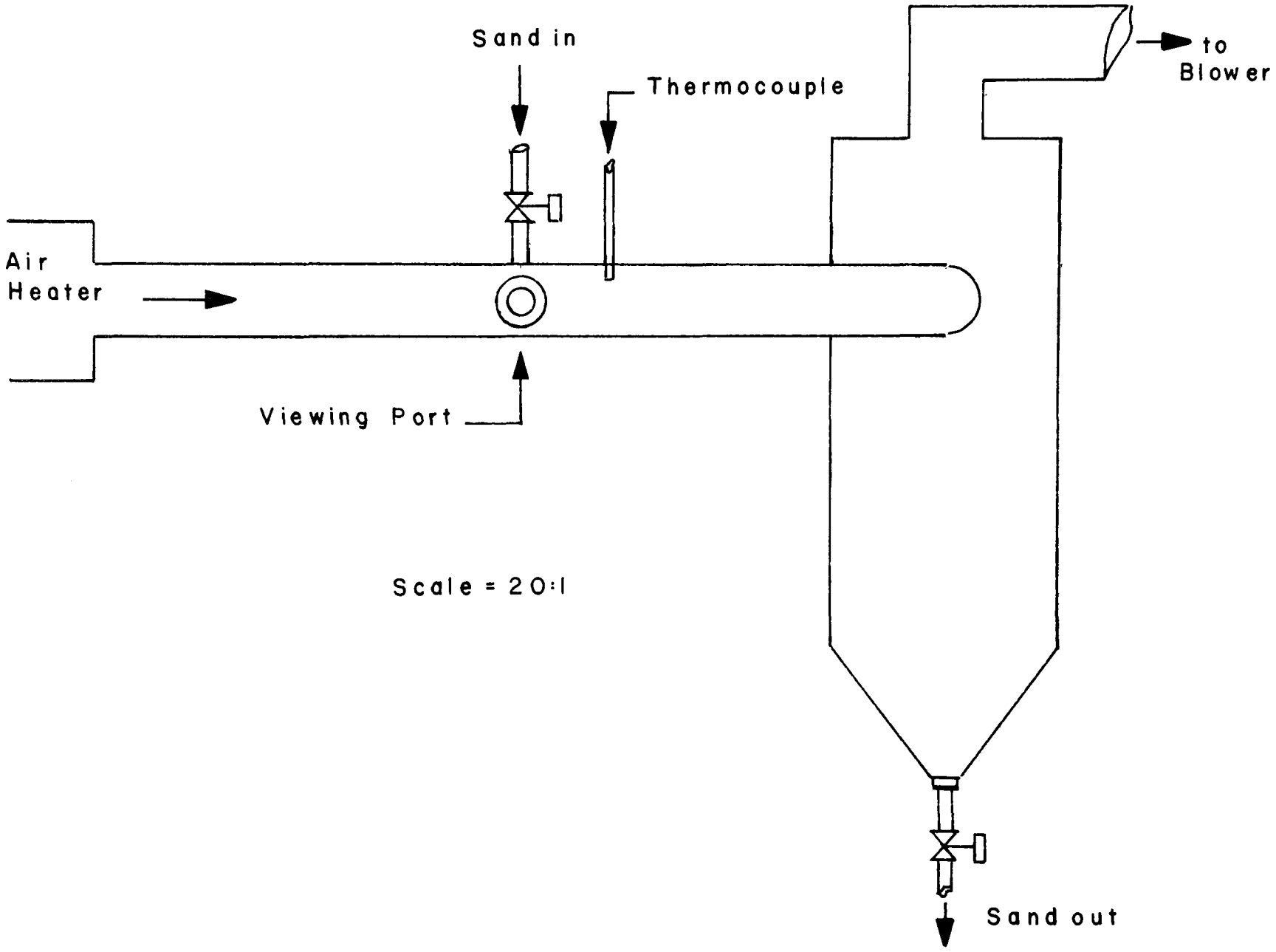

FIGURE 7. CYCLONE TEST APPARATUS

INTERMEDIATE CLEANING STEP

Test No. 10: After determining the conditions needed to convert Stage 3 sand to usable product, tests were conducted to parameterize the process required to convert the raw input to Stage 3 material. This test was an exploratory effort in which various attempts were made to determine the rate at which hot sand beds would pyrolyze and combust the oil contaminant present in the feed sand. This was done by adding small weighed quantities of sand[9] into the tumbler (Figure 5) which contained a hot sand bed of known temperature and weight (usually about 27 lb). It was soon apparent that the temperature of the bed could not easily be held constant with the combustor configuration used. However, the tests did indicate that 500°F was the critical temperature below which combustion was quenched and irreversible cooling resulted, unless auxiliary heat were applied. In all of the tests conducted, any smoke generated during steady state conditions could be essentially eliminated, except at high temperatures, by blowing a gentle stream of air into the tumbler over the hot sand bed.

Test No. 11: In order to control more evenly the process of producing Stage 3 sand, the refractory lining of the tumbler was removed to increase heat dissipation and a cover installed to confine the combustion of the formed gases. The latter was fitted with a hole through which the air pipe was inserted, leaving a clearance of about 1 in. around the pipe. The air supply was connected so that both its temperature and flow rate could be controlled. With this test system it was determined that:

1. A bed of sand heated to about 650°F converted the feed[9] to Stage 3 material almost as fast as the tumbler could be charged. This rate was found to be about 57 lb/hr for the 2.67 cu ft rotating chamber.

2. The heat content of a bed of sand weighing 27 lbs was sufficient to support the combustion process at the above-indicated feed rate without applying external heat.

3. The temperature of the bed could easily be controlled by varying the quantity of air introduced into the tumbler. The air temperature was not varied to effect this control, only the flow rate. Satisfactory results were obtained utilizing ambient temperature air.

4. The volatiles produced by the pyrolysis process burned smoke-free at the mouth of the tumbler with no visible flame being noted on the inside of the chamber. The burning off-gases behaved much like a non-aerated natural gas flame.

Test No. 12: Up to this point all of the tests were performed using dry beach sand[9] contaminated with BFO. A practical renovation system would of course have to deal with surf-wetted feed material.

Test No. 11 was therefore repeated at 700°F using sand saturated with sea water (moisture ~11 wt-%) to which BFO was added to furnish an oil content of 20 wt-%, dry basis. Expectedly, the bed could not be made to sustain the pyrolysis process without the use of supplementary heat. Thus, the transition from Stage 1 to Stage 2 sand, dehydration and tar fluidization and dispersion, will require an energy input; the transition from Stage 2 to Stage 3 will not, if sufficient oil is present. The specific energy input for the dehydration effect will obviously be predicated on the moisture content of the feed and should conform reasonably well[11] with that which was predicted in the theoretical analysis.

Test No. 13: The residence time required for the dehydration and oil dispersion step was next estimated. This was done by feeding the combustor variously sized portions of oil-covered, wet sand and observing the time required to induce combustion. The combustor contents were held at nearly constant temperature by controlling the flow of natural gas to a flame impinging on the outside bottom of the rotating drum. When processed at 700°F, sand samples containing 6 wt-% water and 10 wt-% BFO required about 2 minutes before combustion (Stage 2 condition) was initiated.

Test No. 14: In this series of tests, dry sand containing lower loadings of BFO and Alaskan crude were tested to determine the minimum petroleum content at which the unaugmented conversion to Stage 3 sand would occur. The test conditions were the same as those employed in Test No. 11. It was found that, regardless of the form of oil added, as little as 6 wt-% petroleum would provide sustained combustion.

Miscellaneous Tests: Mr. J. Parsons of Hirt Combustion Engineers obtained some well-aged, oil-contaminated sand samples from a beach in the Santa Barbara area. Other than being more asphaltic and agglomerated than the artificial samples prepared, their behavior in the combustor, per the procedure of Test No. 11, was essential identical. The residence time before acquiring the Stage 2 condition appeared to have been only slightly longer.

Another qualitative test involved observation of the behavior of emulsified Alaskan crude oil on wet sand. The emulsion (~6 wt-% water) was prepared by vigorously agitating the crude oil in sea water with an ordinary mechanical stirrer. After about 4 hrs, the entire mixer contents, emulsion and water phases, were then poured onto dry sand, which was then drained briefly to free it of excess water. The dehydration of this (unstable) system required considerable auxiliary heat input but the emulsion itself collapsed and dispersed almost instantly after contacting the hot bed.

[11] Assuming corrections for systemic heat losses are applied.

SECTION VI

SYSTEM DESIGN

Overview: Initial tests proved that oil-contaminated sand can be thermally cleaned to furnish a product that is hardly distinguishable from sand that has not been contaminated. This testing also provided data needed for the design of practical incineration systems; this included information pertinent to handling times, fuel and power demand, heat penetration, and temperature requirements.

These tests further established that the contaminated sand progresses through three stages in the thermal cleaning process. The first stage involves dehydration and oil dispersion. It takes place when the oily sand acquires a temperature of about 300°F, wherein the oil-fraction becomes quite fluid and coats the sand and excess oil flows from the mixture. When the temperature of the system is increased to about 600°F, all of the oil fraction will vaporize and/or pyrolize to leave a black solid coating on the sand grains.

It was established that if the input material (moisture content ≤ 6 wt-%) is surrounded by hot sand or air at 700°F, the first two effects will be accomplished in approximately two minutes. This parameter, however, is a function of heat transfer rate, which in turn is affected by feed rate, apparatus configuration, air flow, feed material characteristics, and many other variables.

The vapors, other than water, emitted during the first 2 stages of transition have considerable fuel value; utilization of this energy source is of prime importance in apparatus design.

The final cleaning stage consists of exposing the black, dry sand to sufficiently high temperatures and sufficient air to burn off the carbon coating the sand grains. Tests showed that this could be accomplished in about 60 seconds at 1400°F. Here again, many variables will influence the time requirement.

In all of the stages of cleaning it was found that agitation of the oil/sand mixture was required in order to avoid the formation of undesirable clinkers and to obtain reasonable cleaning rates. The known methods of accomplishing the required heating and agitation considered on this project were: rotary kiln, fluidized bed, and cyclonic cleaning.

The input material to be processed must be expected to vary considerably in its chemical and physical properties. In terms of mechanical state, the input may vary from a fairly fluid solid/liquid mixture to a feed which contains large plates of rigid asphaltic contaminant. The input should normally contain more than sufficient (≥ 6 wt-%) petroleum to permit the Stage 2 transition to occur without introducing supplementary energy. The moisture content of the input is a critical parameter and should be held to a minimum. It is not unreasonable to

expect, however, that an average of 6 wt-% moisture can be obtained if the excavation operation is managed in a specific manner. Another important characteristic of the feed material will be manifested as unavoidable inclusions of variously dimensioned foreign and natural objects. With the obvious exception of gross pieces, the rejection of such items prior to combustive processing would not be possible. The incinerator would therefore have to be designed to screen the process material at some point between input and output, or to permit the complete passage of all noncombustibles that are introduced.

Finally, throughput requirements must be considered. Unfortunately, the linear rate of beach cleaning cannot be predicted on the basis of the quantity of sand that can be decontaminated per unit time. A number of factors preclude such a correlation, as was discussed in a previous section. It was nonetheless pointed out that under conditions that one can reasonably expect to find, a feed rate of between 38 and 53 tons per hour will result in the decontamination of 1 mile of beach per 8 hour work day. Assuming that this linear renovation rate is an acceptable one, the input specification for a full-scale system has arbitrarily been set at 60 tons/hr.

Design Analysis: Stage 1 and 2 transitions of the cleaning process are the most difficult to accomplish in a short time, primarily because of configurational constraints. The rotary kiln represents, by far, the readiest solution to these problems; it provides containment of the materials, while allowing agitation, conveyance, and gas/vapor containment. For this reason, process design was developed on the basis of the use of a rotary kiln type of apparatus for at least the production of Stage 1 and 2 material.

Fluidized bed methods are feasible for the final (Stage 3) cleaning. It was calculated, for example, that only 15,000 ACFM of air (1400°F) would be required to fluidize a one-ton sand bed. Assumed here is an average carbon-coated particle diameter of 0.03 in., a solid phase density of 100 lb/cu ft, and a superficial gas velocity of 4.5 ft/sec. This volumetric flow rate (and, thus, the fan power required) is considerably lower than would be necessary for a rotary kiln configuration of the same output capacity.

A disqualifying drawback of the fluidized process is the fact that the input would have to be screened so that the bottom of the bed would not accumulate a blockage of larger-diameter noncombustible material. The utilization of a screening process was studied in some detail but it was concluded that the incorporation of such components would create more problems and functional risks than the use of a fluidized bed could justify. Specifically, no suitable arrangement could be envisioned that would permit the simultaneous screening and rejection of oversized objects and the collection of decarbonized sand elutriated from the bed.

Cyclone Cleaning: While considered in the experimental portion of this project, cyclone cleaning was found to be practical only for combusting

Stage 3 sand. Because of the extreme abrasion problems encountered in handling sand in a cyclone cleaner, and in view of the fact that the initial cleaning stages would still have to be accomplished in a rotary kiln type of device, this method was not considered further. This analysis therefore considered design parameters and configurations based exclusively on the employment of a rotary-kiln type of thermal cleaning device.

Batch Kiln Process: This process would consist of the use of a single rotary kiln, in which an amount of contaminated sand would be loaded, processed and the clean sand periodically dumped. While production rate would be low, this type of process does have certain advantages. For example, control problems are negligible and material handling would be simplified. This type of processing could be accomplished by modifying presently available equipment, specifically a cement mixing truck. By adding a refractor lining, burner, fan, and a fuel atomizing pump and compressor, it would become a batch-type rotary kiln. If air pollution problems are to be considered, an after burner would definitely also be required. Figure 8 illustrates how these modifications could be accomplished. Considering a 10 cubic yard transit mixer, at 20% fill[12], it is estimated that 2,800 lb/hr of sand could be processed in a single mixer. Thus it would require 7 mixers this size to produce an output of 10 ton/hr. Fuel requirements for this processing rate would definitely be higher than for the continuous process (discussed in the next subsections), since very little of the heat available in the oil contaminated sand would be utilized. Power consumption, however, would be somewhat lower. Labor costs would obviously be higher. Only a single operator will be required for a continuous system (sub- or full-scale), while at least two men would probably be needed to tend every four or six trucks. Equipment costs can be estimated based on two approaches: the purchase and modification of new equipment[13] or the temporary retrofit of rented vehicles. If the former practice were followed, the equipment cost would be considerably higher than for a continuous system. The latter (rental) approach would be far cheaper but would entail problems; e.g., delay while retrofitting and acquiring suitable vehicles.

CONTINUOUS KILN OPERATION

Process Description: Rotary kilns, both refractory-lined and unlined, are common items of industrial equipment. The kiln consists of a tube rotating on its longitudinal axis, through which solids or slurries are conveyed with or against a stream of process gas. The interior of the shell can be equipped with a variety of material lifters, baffles, conveyors, or material showering arrangements to provide virtually any

[12] Higher fills can be employed in the batch process than in continuous kiln operations.

[13] New 10 cu yd transit mix trucks are priced at about $25,000.

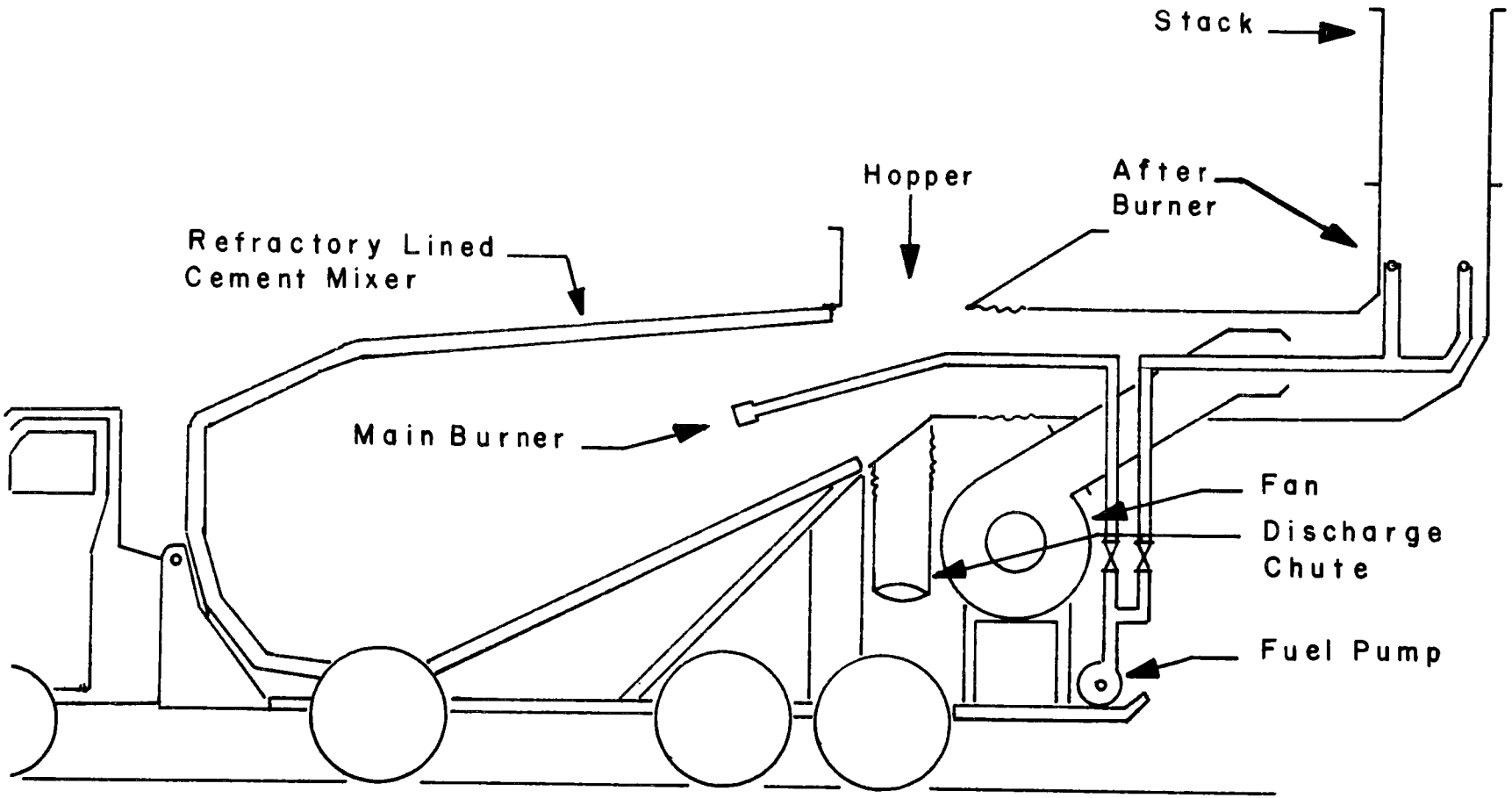

FIGURE 8. BATCH TYPE SAND CLEANER

desired material flow characteristics. In general, the function of the rotary kiln is insensitive to the material being handled; rocks, sand, bottles, seaweed and driftwood (within reasonable limits) will not affect operation adversely. In the present process context, both countercurrent and concurrent gas/feed flows are applicable. The concurrent arrangement is indicated for the first portion of the system (Stages 1 and 2) in order to remove volatilized oil constituents and pyrolyzates from the sand without recooling, while countercurrent flow is suggested in the high temperature stage, in order to operate at lower gas temperatures. In addition to this two-part rotary kiln, a combustion chamber is needed to provide heat for the process and to burn oil vapors given off in the pyrolysis stage.

Figure 9 shows the basic flow in this type of apparatus. The relative flow rates from the stack and rotating-cleaner blower would be determined by the speed of the latter, which, in turn, would be controlled by gas temperature. Normally, the feed for this process from a hopper or conveyor would be continuous. An apparatus producing the indicated effects would be sufficient to clean sand. To minimize fuel requirements, however, several alternatives are available which should be considered for the final design. These are:

1. Hot sand recycle
2. Hot air recycle
3. Fresh air preheat with sand cooler.

All of these alternatives may be practiced on a continuous feed basis.

Information, data, drawings, etc., discussed herein are based on a nominal (minimum) clean sand output of 10 ton/hr, rather than that of a full-scale system. This was done because the output estimates are highly conservative and actual results obtainable could well exceed (by as much as a factor of three) performance expectations. In addition to avoiding oversizing, it was the intention to provide characteristics for a system suitable for early field test evaluation which would involve a more reasonable R&D capitalization.

Hot Sand Recycle: This process would consist of reusing a portion of the hot, clean sand output as a bed for the contaminated input, thus providing a heat exchange medium for the Stage 1 and 2 portions of the process (see Figure 10). Since the hot recycled sand actually becomes additional feed material, this process would reduce the input rate of contaminated material by an amount equivalent to the amount of sand recycled. The volume of the kiln would therefore have to be enlarged by a factor representing the square root of the fractional throughput displaced by recycle sand. The amount of recycle sand needed will depend on the heat required to produce the first two stages of sand renovation. If no auxiliary burner is included to produce the first stage transition, this would almost equal the input of contaminated sand. Because of the equipment size limitations imposed by the mode of application envisioned, this concept has been reserved but not discarded insofar as the present level of design effort is concerned.

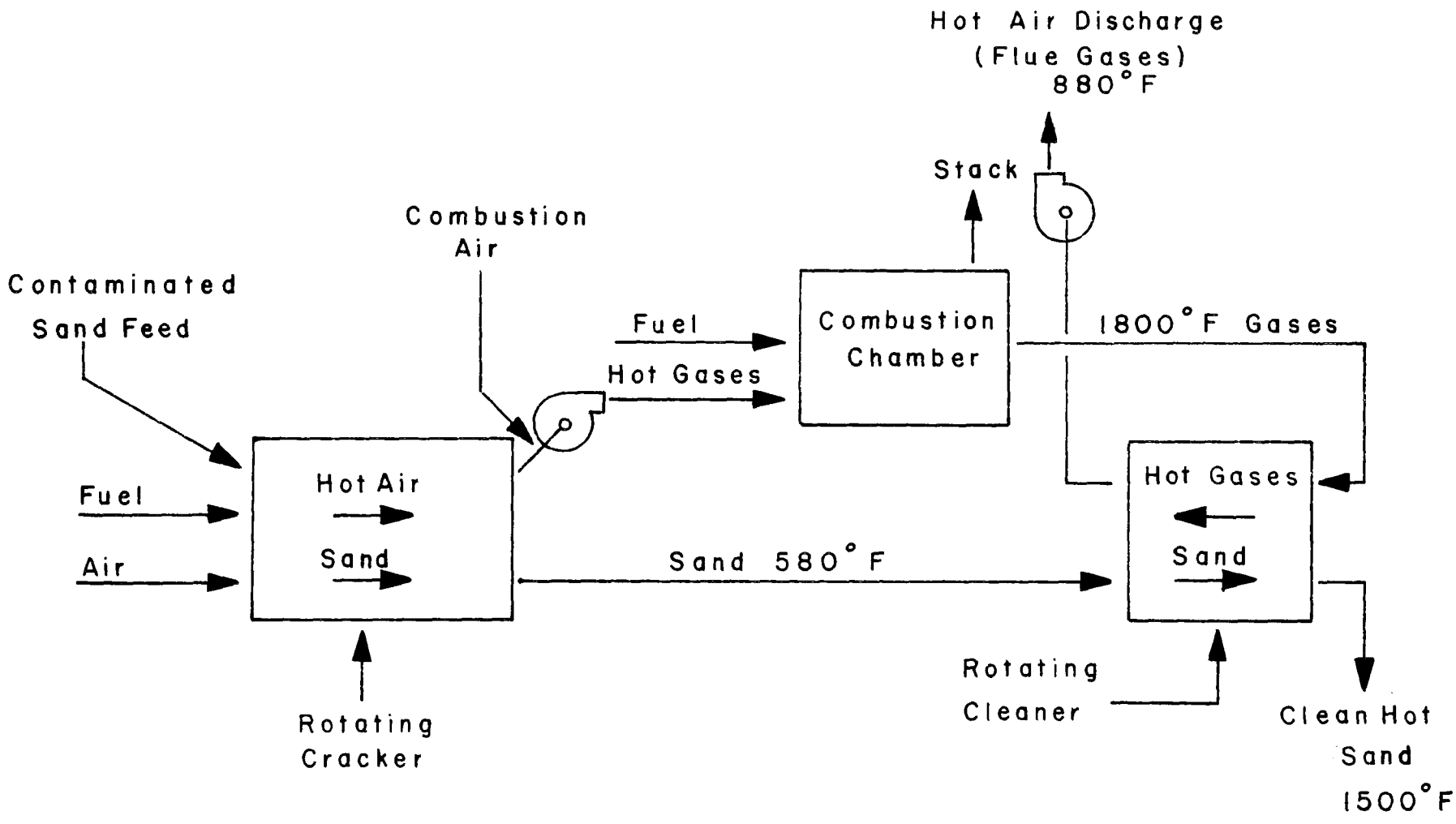

FIGURE 9. BASIC CONTINUOUS SAND CLEANING FLOW DIAGRAM

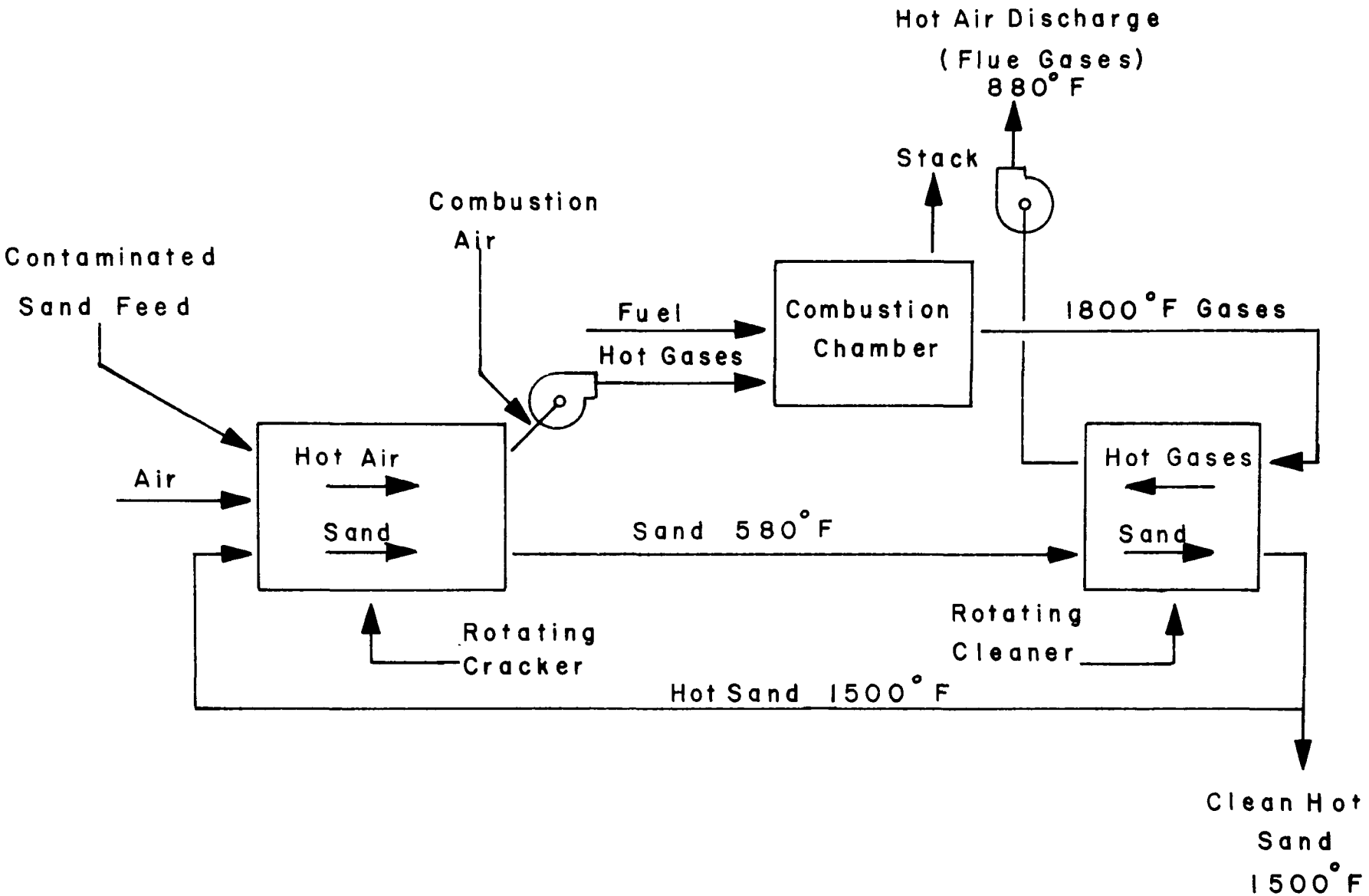

FIGURE 10. HOT SAND RECYCLE FLOW DIAGRAM

Hot Air Recycle: This effect would consist of utilizing a portion of the output from an augmented hot gas generator to provide heat, not only for the final sand cleaning stage but for the initial stages of cleaning. This arrangement would eliminate the requirement for an additional burner and make the use of hot sand recycle unnecessary. Figure 11 diagrams the concept. The preheat air temperature can be raised to any level the physical limitation of the equipment will allow and would be maintained constant by the addition of tempering (fresh) air ahead of the fan. This arrangement would necessitate an increase in the size of the equipment, so that the linear rate of gas flow could be held below the conveying velocities. For this purpose, 750 ft/min was selected as the maximum allowable velocity through the kiln.

Fresh Air Preheat with Sand Cooler: If the clean sand were discharged at final process temperature (~1500°F), certain handling problems and safety hazards would exist. This difficulty would be considerably reduced by the addition of another rotary kiln, through which clean fresh air were passed countercurrently against the discharging sand flow. Sand effluent temperatures as low as 250°F could be reasonably obtained in this manner. The exhaust air, which would be heated to about 1000°F in the process, could then either be discarded or, to conserve fuel, used in the first stages of the cleaning process.

Equipment Description: A complete sand cleaner, as herein envisioned, consists of: cracker, combustion chamber, cleaner, appurtenant equipment (fans, burners, fuel source, power supply and controls) and an optional sand cooler. A brief description of each follows:

Cracker: This is a rotary shell wherein the first two stages of cleaning take place. Contaminated sand is fed into one end through a vertical hopper, along with sufficient concurrent hot gas to complete Stages 1 and 2. The heat is supplied either by a burner, hot recycled sand, or hot recycled air. Approximately 6.2×10^6 Btu/hr would be required. This figure includes no credit for oil combustion energy and assumes an input of sand of 20,000 lb/hr (inert basis), together with the maximum expectable amount of oil (5,000 lb/hr or 20 wt-%, dry basis) to be heated (but not burned) and water (1600 lb/hr or 6 wt-%) to be vaporized and heated in both the liquid and gaseous phases. This would, of course, be decreased by any combustion heat that is provided by the oil and/or reduction in water content. Since, at the probable minimum oil content (6 wt-%, dry basis), the oil will release about 23×10^6 Btu/hr in the presence of sufficient oxygen, it will be necessary to limit the amount of air that is introduced to prevent complete combustion from taking place in this stage. If the full 6.2×10^6 Btu/hr required in this stage could be obtained from the oil combustion, it would require (at 1 cu ft air/100 Btu) 1,030 SCFM air in this zone. Similarly, if no oil were present, an auxiliary heater system would be required to furnish a like amount of air. The off-gases from the vaporizing and pyrolyzing oil (maximum amount) taken together with the combustion air and water vapor produced would represent a maximum volumetric flow, at 600°F, of about 11,000 ACFM. This would have to be ducted in a kiln diameter

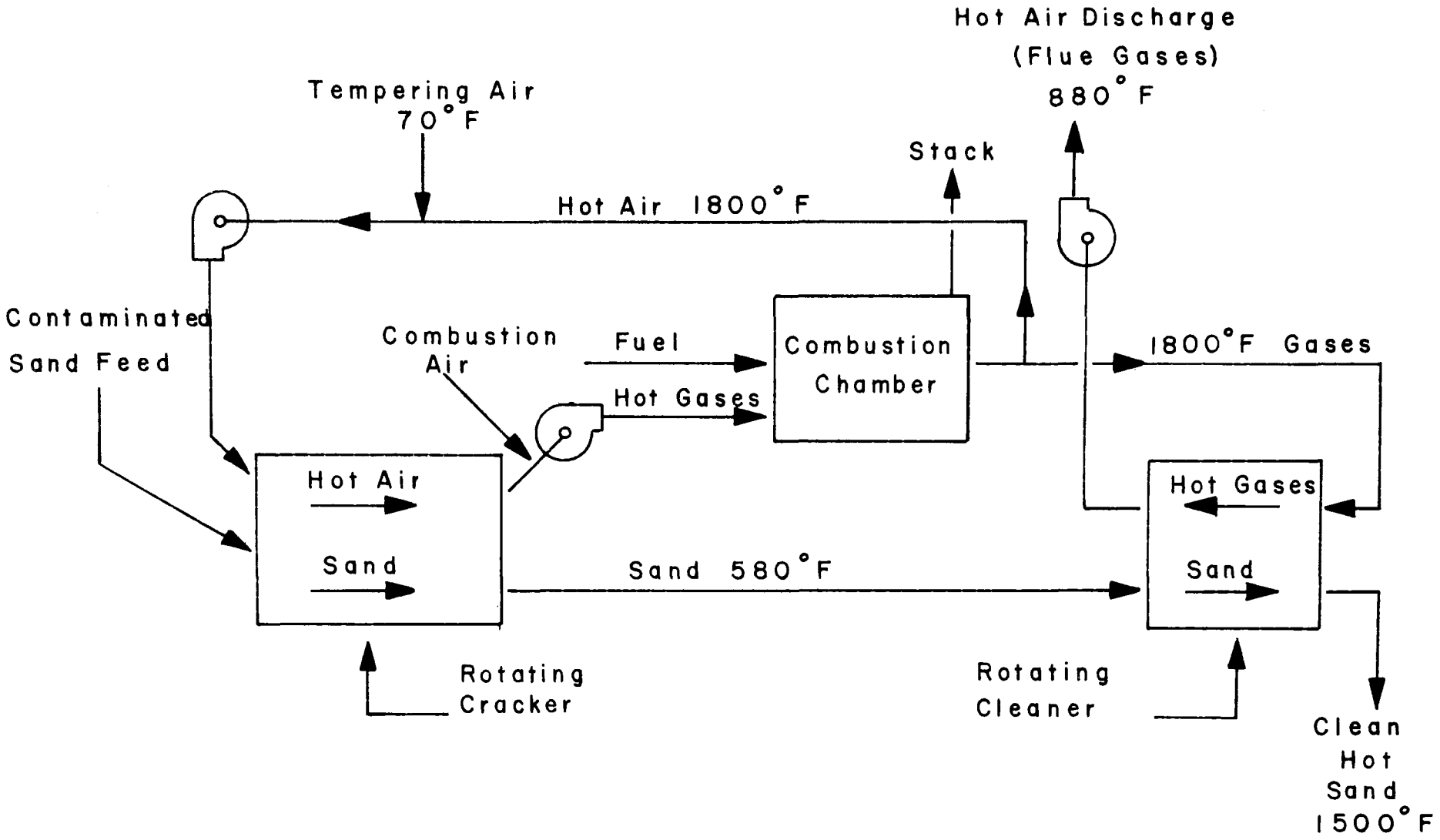

FIGURE 11. HOT AIR RECYCLE FLOW DIAGRAM

of no less than 4.5 ft in order to maintain the gas velocity through the shell at less than 750 ft/min. Length, based on 10% fill (normal for rotary kilns) and a retention time of 6 minutes (furnishing a 3x safety factor) would be about 15 ft. Since the temperatures in this portion would probably not exceed 800°F, the shell could be constructed of mild steel and without incorporating a liner. Lifters would be provided for proper agitation and transport.

Combustion Chamber: The combustion chamber for furnishing process heat would be a non-rotating, refractory lined cylinder, sized to accommodate a heat release from combusting petroleum vapors as high as 9×10^7 Btu/hr, based on a maximum envisioned oil input of 5,000 lb/hr. An auxiliary burner would be included to provide heat for the process when the oil content of the sand is low. This combustion chamber would operate at sufficiently high temperatures to avoid air pollution problems. The discharge gas would be maintained at about 1800°F by the addition of appropriate quantities of diluent air. A spark ignited continuous pilot would be provided to insure a source of ignition. Combustion air for the final cleaning stage would be supplied by a fan, which would also remove vapors from the cracking stage.

Sized for maximum required heat release, the combustion chamber would have a volume of about 530 cu ft. It would be a 20 ft long cylinder, 6 ft in diameter, lined with a 4.5 in. thickness of refractory material.

Cleaner: The purpose of the "cleaner" is to accept the black, carbon-coated sand flowing from the cracker and increase its temperature from about 600°F to 1500°F, thereby oxidizing the carbon from the sand grains and furnishing a discharge of clean 1500°F sand. Hot (1800°F) air from the combustion chamber would flow countercurrently with respect to the sand flow in this kiln. Because of the higher operating temperatures, the rotating shell for this stage should be constructed of a high temperature alloy. This design feature would probably promote minimum discoloration of the output. Dimensioning of the shell would be on the basis of a 10% fill, 3 minute retention time, 750 ft/min gas velocity, and a temperature drop of 900°F in the hot gases as heat is acquired by the sand. About 4×10^6 Btu/hr must be transferred to the sand; this would require about 4000 SCFM of gas, or 18,000 ACFM at 1800°F. To maintain a gas velocity of 750 ft/min in the shell would require an inside diameter of 6 ft. Because, however, the gases are cooled in passing through the kiln, the volumetric discharge of gas would only be 10,000 ACFM (at 900°F). Thus, if the cleaner were sized down to have, conveniently, the same diameter (4.5 ft) as the cracker, the discharged gas velocity would be 630 ft/min. This would preclude the blow-back of any solids into the cracker. At the (1800°F) sand discharge end of the kiln, however, conveying velocities would be exceeded. This would result in some material being carried back into the cleaner, but not its full length. A zone containing a heavier concentration of sand fines would be formed but the normal output flow would be reestablished after steady state conditions were developed.

The 4.5 ft (dia) shell would require a length of 7 ft, in order to allow room for drive mechanisms, trunions, etc. Rotary drier experts advised that a length of 12 feet would be more suitable for this shell. Lifters would be provided in this shell to obtain agitation. External shell temperatures could be reduced with refractory, if required.

Appurtenant Equipment: In addition to the three components previously discussed, several major items of equipment would be required to complete the system. These would include: air handling equipment, burners and fuel source, power supply and controls.

Air Handling Equipment: Fans will be required to provide hot air for the cracker and the combustion chamber, and motive power for air flow in the cleaner. Two fans will be required to perform these functions. One fan would supply combustion air (15,000 SCFM) to the combustion chamber and draw air and vapors through the cracker. The other fan would draw air through the cleaner (4,000 SCFM). Both should be of high temperature alloy construction for maximum service lift and to permit the handling of the high temperature air. The first fan would require a 15 HP motor, and the second a 5 HP motor.

Burner and Fuel Source: Because of its availability, diesel oil has been selected as the auxiliary energy source for the machine. Air-atomized oil burners would be used to provide heat injection. Two burners would be required in the basic unit; one in the cracker and the other in the combustion chamber. The maximum heat required for these stages, when none is available in the sand influent, would be slightly over 10^7 Btu/hr, or 72 gph of oil. Diesel fuel would also be used to supply a motor/generator set to furnish electrical power to the fans, pump, compressor, kiln rotating motor, and controls. A hydraulic pump and motors might also be used for this purpose. A total of 45 HP would be sufficient to provide the required power, which is itemized as follows:

Component	Horsepower
Fans	20 HP
Pump	5 HP
Compressor	5 HP
Kiln Drive	10 HP
Control and Miscellaneous	5 HP
Total	45 HP

The fuel consumption of the motor-generator set would be approximately 2 gph.

Controls: Two temperature control systems will be required. One would control the temperature of the cracker by varying the fuel and air fed to the burner. The second would control the hot sand discharge temperature of the cleaner by varying the temperature of the gas led into the cleaner. This would be done by adjusting the amount of dilution air mixed with the gas discharged from the combustion chamber. In

addition, temperature limited fail-safe devices should be provided in each chamber to prevent equipment damage in case of malfunction. Each burner should also be equipped with combustion safeguards to insure safe operation.

Sand Cooler: The physical size of the optional sand cooler would depend on the maximum allowable sand discharge temperature. If the cooler were the same length and diameter as the cracker and cleaner together, retention time would be 9 minutes. If the air is drawn through the cooler (as shown in Figure 12), the maximum air temperature rise permissible through the cooler would depend on the limitations of the fan. Assuming a maximum fan temperature rating of 1000°F and an input (hot day) air temperature of 100°F, the ΔT would be 900°F. If the exiting gas velocity were controlled at 750 ft/min, the volumetric flow would be 12,000 ACFM at 1000°F, or 4,250 SCFM. Based on the given ΔT, the heat transfer to the gas phase (neglecting small heat capacity corrections for changes in chemical composition) would be about 4.3×10^6 Btu/hr. This would be sufficient to lower the sand temperature from 1500°F to about 415°F. This could be further reduced by increasing the diameter of the shell and (correspondingly, based on cross-sectional air increase) the air throughput. Another approach to achieving cooler sand output would be to relocate the fan from the gas outlet to the air input. This would allow the outlet gas to come to much higher temperatures. It might also pose design problems if the system proves to have a high Reynolds number and considerable air is lost through the sand discharge opening. As previously mentioned, however, sand temperatures as low as 250°F are not unreasonable to expect. If, in fact, this parameter becomes important in terms of operational efficiency or hazard control, a simple remedy would be to spray sea water onto the piling output. This could be done with minimum increase in operating cost. Such a process might also be worth while to minimize thermal damage to the output conveyor belt.

System Configuration: Figures 13 and 14 illustrate two possible arrangements of the apparatus and indicate approximate sizes. Figure 13 shows the basic unit, in which heat recuperation from the output sand is not involved. Figure 14 indicates the size increase required for the addition of hot sand recycle. Addition of hot air recycle is not shown. However, the size would be approximately that shown in Figure 14. The system size will increase approximately as the square root of throughput, so that 100 tph units will be approximately three times as large as the 10 tph systems illustrated in Figures 13 and 14. The weights of these combustors have also been estimated and are shown as a function of throughput in Figure 15. As can be seen, a 10 tph system would weigh about 13 tons and a 60 tph combustor about 38 tons.

Air Pollution Considerations: The bench tests conducted demonstrated that, if sufficient oxygen is provided for combustion, the oil in the influent can be burned with no visible particulate emissions. Dust generation from air flow through the sand is possible. In this case a small cyclone dust separator might be required. Fan B (see Figure 13) motor

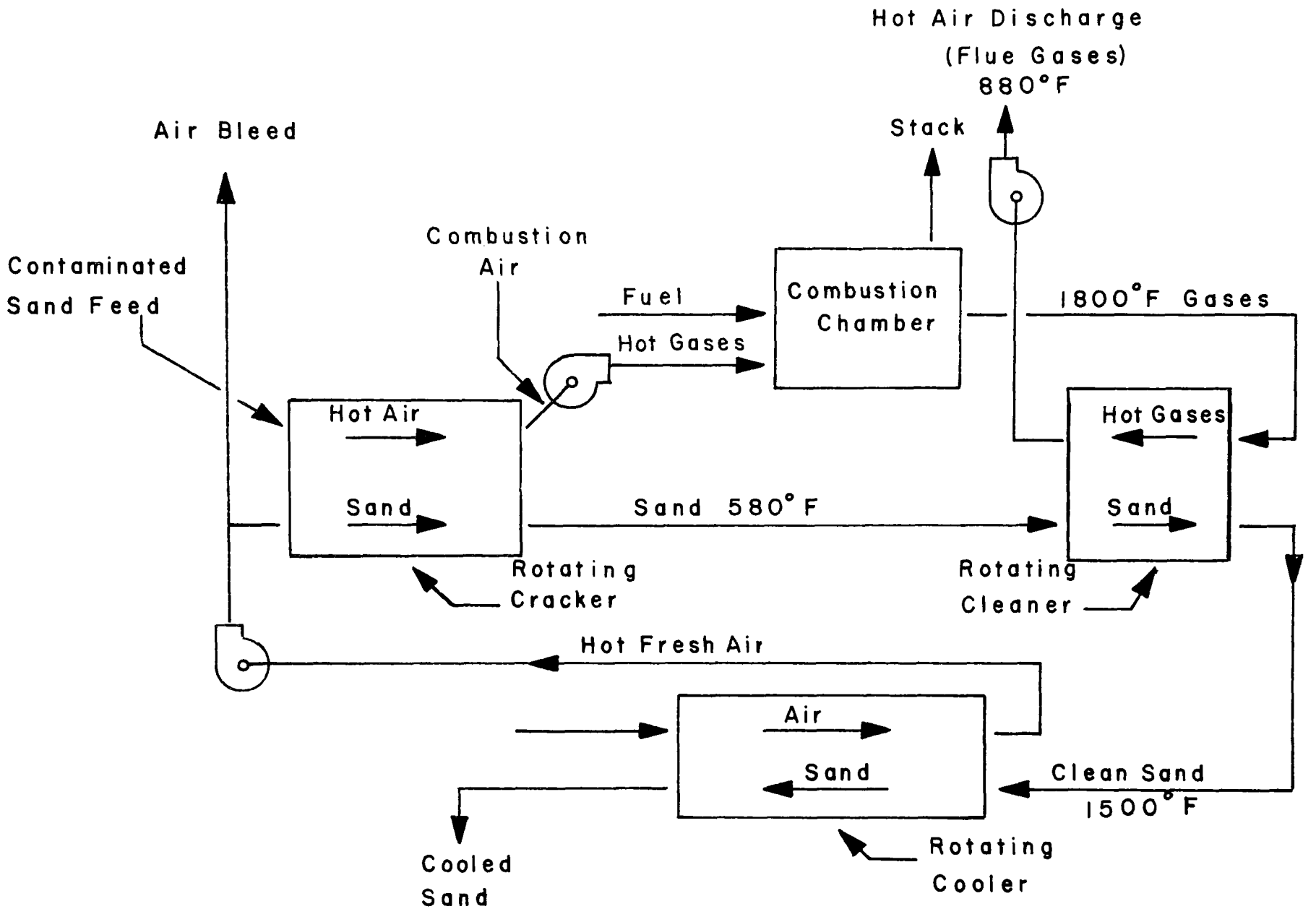

FIGURE 12. FRESH AIR REHEAT WITH SAND COOLER

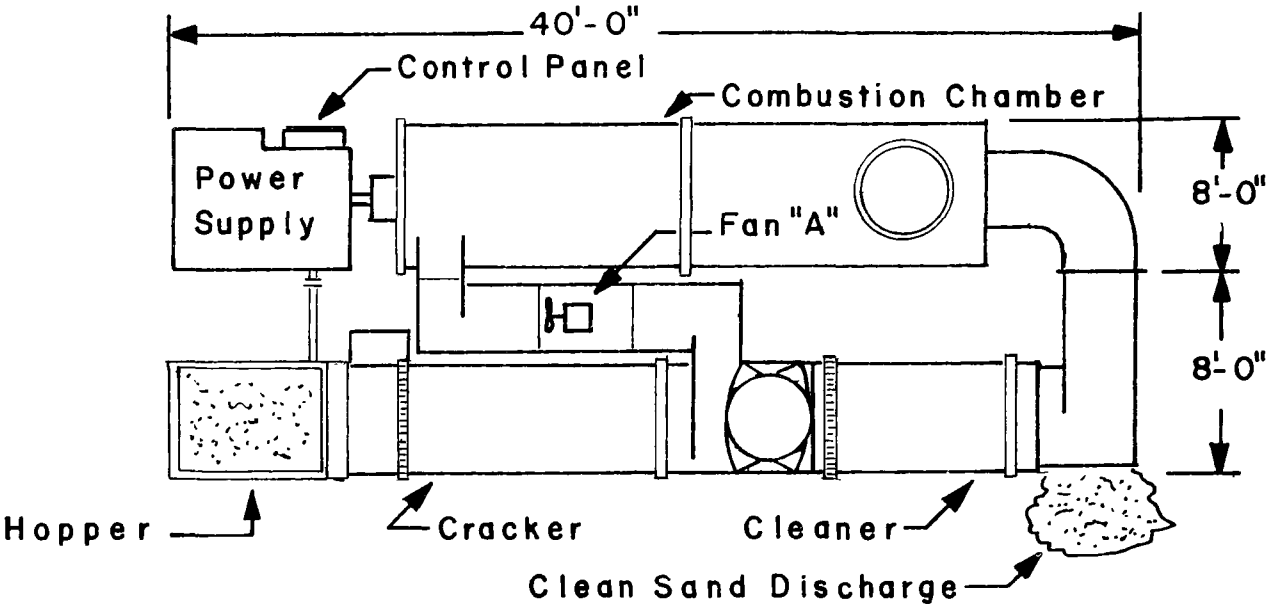

Plan View

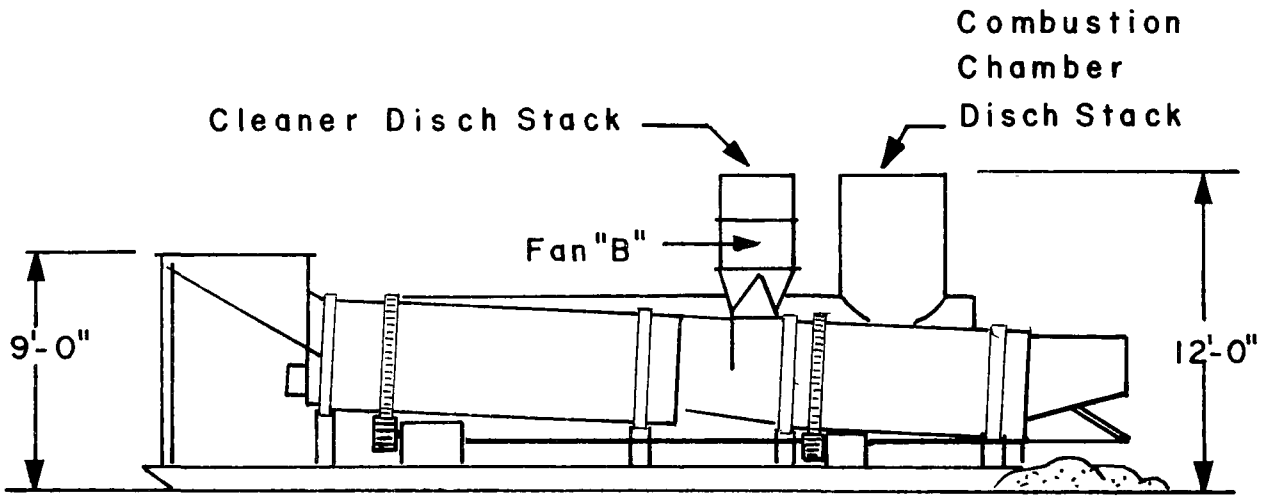

Side Elevation

FIGURE 13. BASIC ROTARY KILN SAND CLEANER

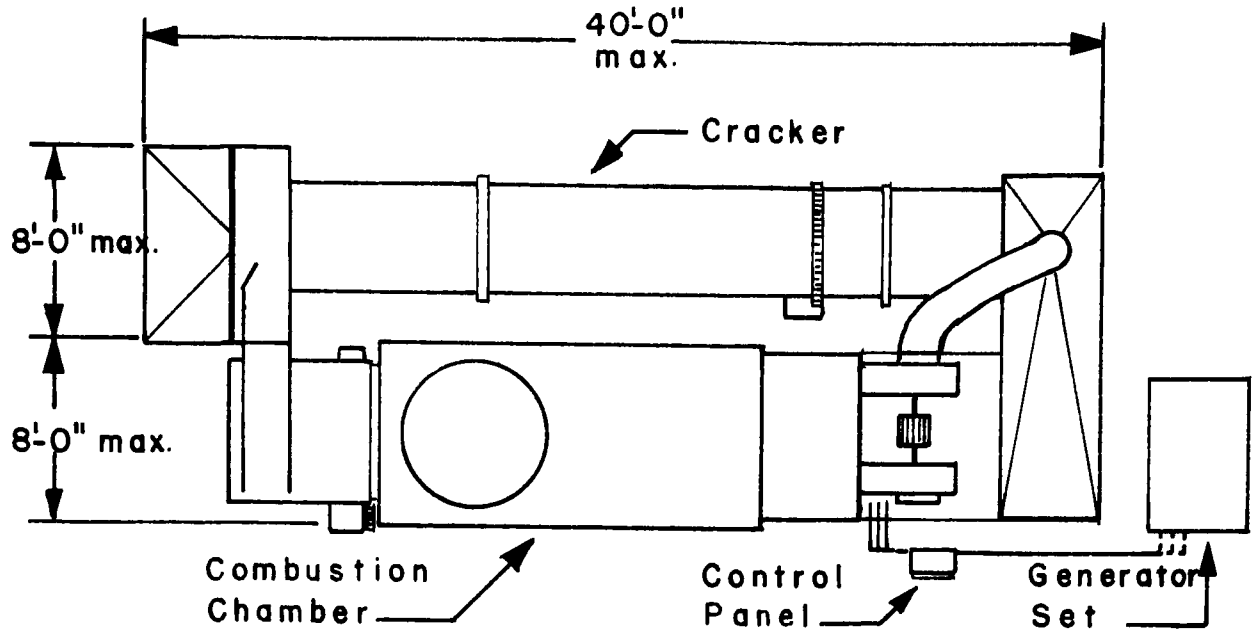

Plan View

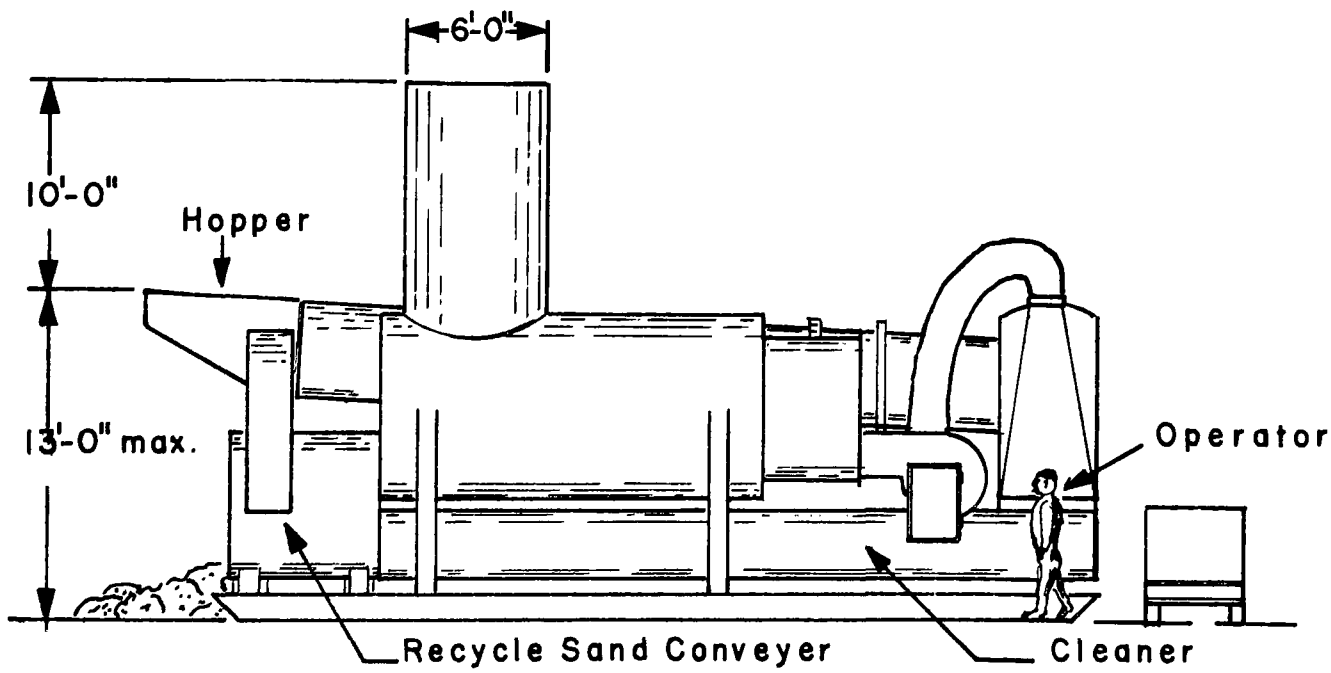

Elevation View

FIGURE 14. ROTARY KILN CLEANER WITH HOT SAND RECYCLE

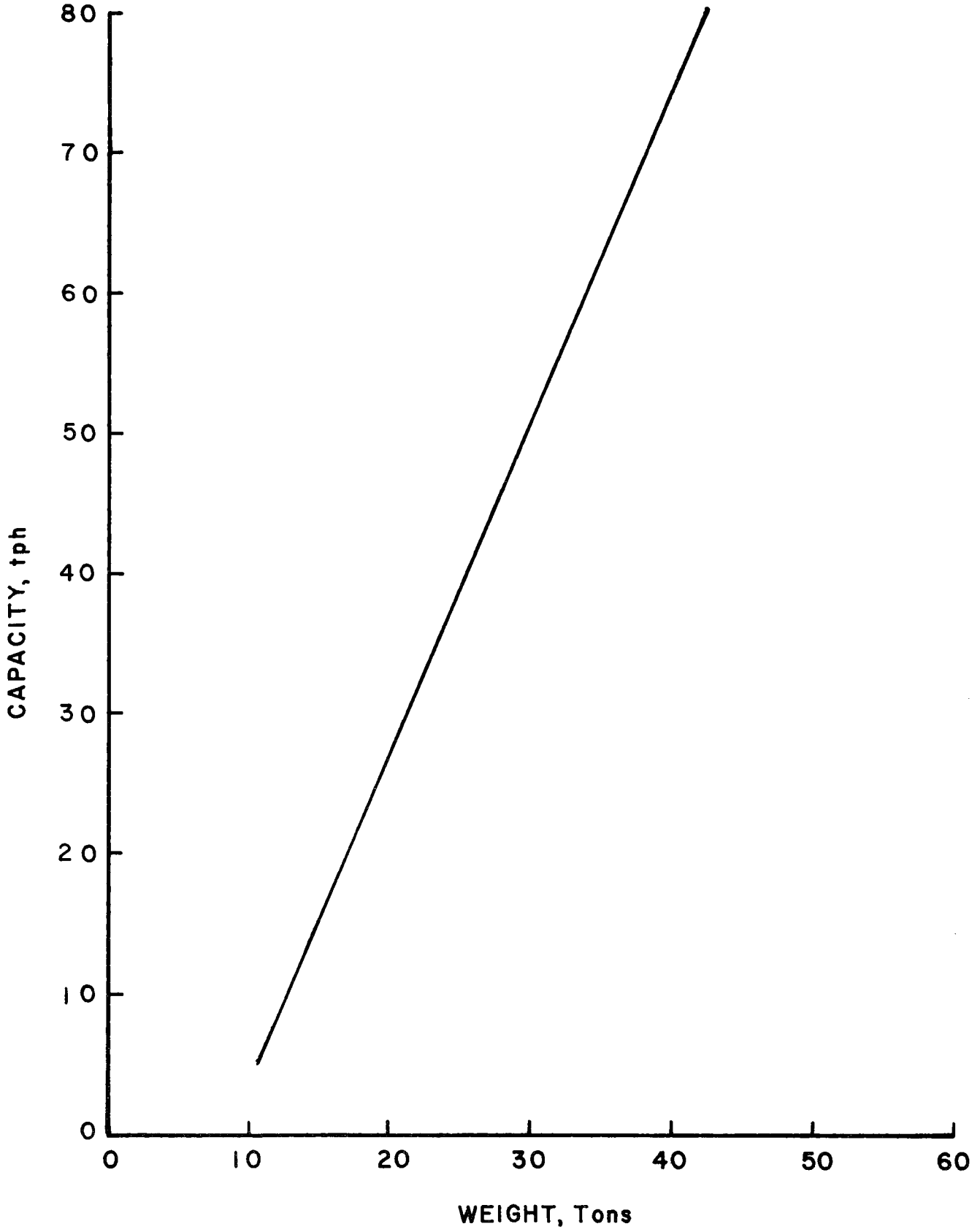

FIGURE 15. ESTIMATED WEIGHT OF BASIC SAND COMBUSTOR

horsepower would then have to be increased to 10 HP to provide additional static pressure for flow through the cyclone.

Other Characteristics: It was felt that the detailed consideration of certain system characteristics would be premature at this time. Engineering aspects dealing with optimum transportability, beach mobility, and sand handling to and from the system were therefore treated in only a preliminary manner. Detailed analysis of these design features should be deferred until after a sub-scale combustor has been built and tested to provide the needed design specifications for a full-scale system. A tentative projection of how these other requirements might be managed is, however, discussed in the following paragraphs.

Transportability: Assuming that the subscale system is capable of operating at only its minimum rated throughput (10 tons/hr), a full-scale incinerator (38-53 tons/hr) would, theoretically, have to be 1.95-2.30 times larger. The dimensions of the subscale sand cleaner are, however, already such that transporting it by air would only be possible if the system were dismantled and moved in several aircraft. If still larger components are indicated, it is doubtful if air transportation would be physically possible or economically tolerable.

It may eventuate that the subscale system will satisfactorily perform at its maximum projected throughput (30 tons/hr) and that this production rate would be accepted as adequate for routine beach cleaning operations[14]. Even if scale-up proved unnecessary, the question of whether flying such heavy and bulky equipment would be advisable must still be considered. In all likelihood, the sand cooler (if used), the combustion chamber stack, the pump and generator set, and, possibly, the cracker would have to have detachable features to permit separate or repositioned shipment. Providing this capability were feasible, it could increase equipment costs by as much as 25%. A further drawback would be that a significant portion of the time gained by air freighting the equipment would be lost in having to reassemble it at or near the use point.

Although trucking the intact equipment to a disaster scene might require an additional day or two, the device could be put onto the beach directly from the flat-bed carrier. The money saved per trip by this method of drayage could amount to as much as $10,000. Thus, a careful analysis of these factors will have to be made prior to hardening the ultimate configuration of the renovator and determining its mode of deployment. Another possibility is the shipment of the combustor from a seaport storage-point to a spill site by amphibious seacraft. The danger implicit in this kind of delivery is well known even for specially-designed (combat) vehicles. A tractor-drawn, non-ruggedized machine might not survive an unfavorable landing situation.

[14] A possible precedent is suggested in Reference 37.

Beach Mobility: The conceptual designs developed herein present an incinerator that is sled mounted. Such an arrangement will doubtless be adequate for restricted field test purposes. In actual renovation operations, however, the system will probably have to be moved several times a day in order to keep the incinerator reasonably close to the excavation equipment. While it would clearly be impractical to develop a self-propelled machine, it may be possible, under certain beach conditions, to operate the renovator on the bed of the carrier which delivers it. However, additional provisions would still be needed to permit its easy movement along a beach by being drawn by a tractor or similar vehicle. A sled base may well prove inadequate for this purpose. An appealing traction form would be the tracked (continuous belt) assembly.

It should be pointed out that, in moving the machine along the contaminated area, it should not be allowed to cool. This would cause reheating delays and additional fuel costs. Thus, while being moved, the combustor would be fired by its auxiliary fuel source.

Sand Handling: The subscale system discussed herein is a hopper-fed device which discharges its cleaned output directly onto the ground. For field testing purposes it will be necessary to build up a sand ramp adjacent to the incinerator so that front end loaders can elevate their shovels above the 13-ft high hopper. Similarly, the sand discharged will have to be removed periodically to prevent the incinerator output opening from becoming blocked. Some type of sand-conveyance device will have to be provided when a fully operated system is designed. The configuration this ancillary equipment should assume will be better recognized after ultimate incinerator requirements are defined. It is expected, however, that certain of the sand moving techniques now being evaluated by URS Research Co. for the FWQA will be of value for that purpose.

Equipment Costs: The costs of fabricating test devices of the type herein described will be very close to those of fully functional units, excepting two cost factors. These are the feeding and outloading systems, and the traction assemblies, which have not been considered. Neither of these cost items should be excessive, but further design analysis will be required to verify this conclusion[15]. The cost function for the basic system is shown in Figure 16.

Operating Costs: In normal costing, many factors are applied that would be difficult to consider in terms of the present system. The equipment described here would be employed for a relatively short time following an oil spill disaster and costs would be indemnified by the party found responsible for the damage. The responsible party could not be expected to pay for the equipment on a fair rate-of-return basis nor could he be allowed to share pro rata incapital cost annualization. The situation is somewhat analogous to that wherein the owner

[15] Based on standard pricing practices for chemical feed equipment, an ROM estimate of $7500 was derived for the constant-feed input system and output conveyor.

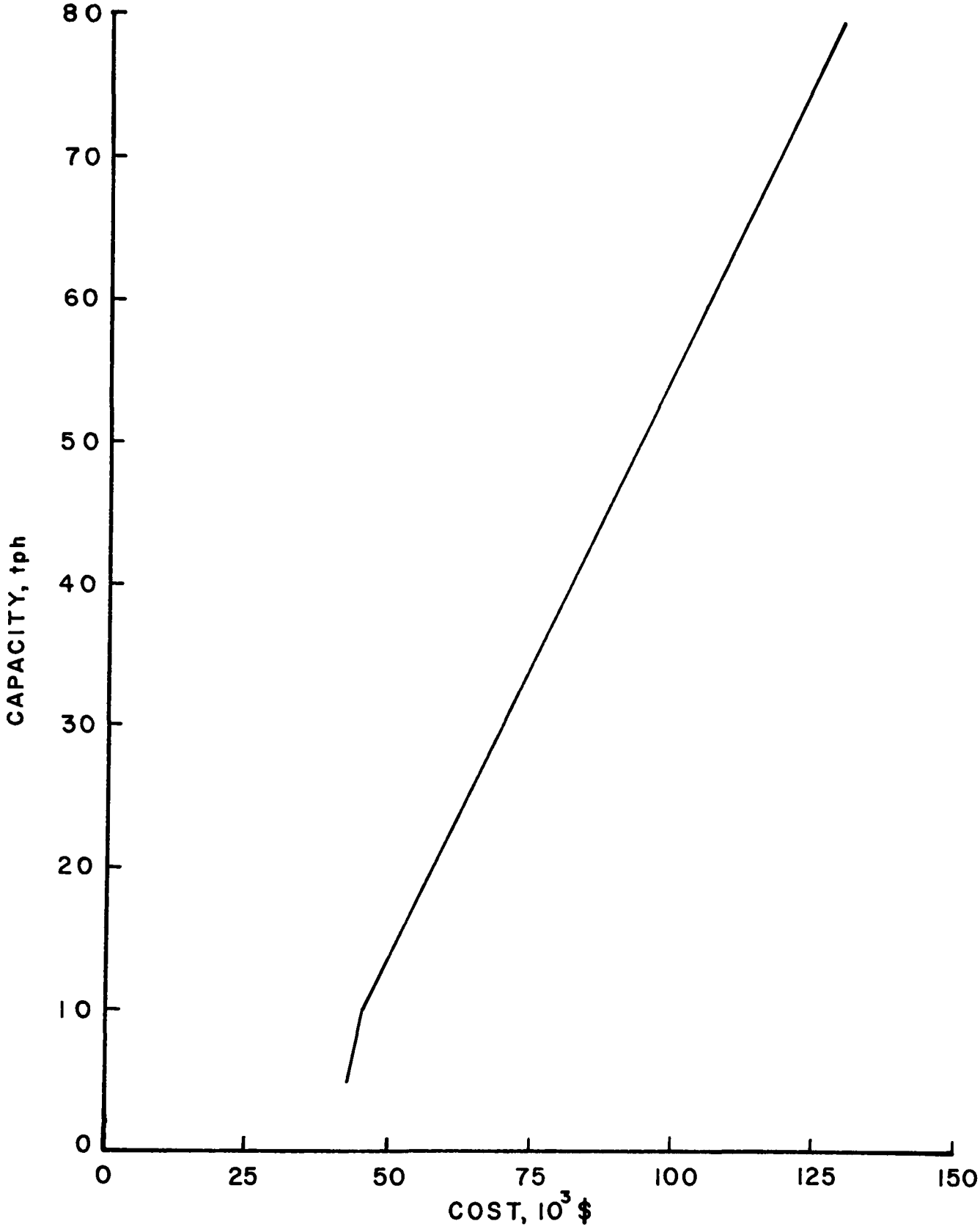

FIGURE 16. ESTIMATED CONSTRUCTION COSTS OF BASIC SAND COMBUSTOR

of a fire-damaged home would be required to pay the fire department for services rendered on an annualized basis.

Annual capital costs are determined by annualizing the initial equipment investment, using an appropriate capital recovery factor and then adding to this rate due compensation for interest, insurance, taxes, etc. When these costs are returned by users, the equipment use-rate determines the degree of recovery that must be applied. If the equipment is used one month out of the year, the normal rental rate must be increased by a factor of 12.

Based on an estimated equipment life expectancy (N) of ten years, the amortization rate (A) would be 14.9%, if an 8% rate of return (r) is expected. That is,

$$A = \frac{r\,(1 + r)^N}{(1 + r)^N - 1}$$

Federal taxes should be set at about 3%, insurance at a minimum of 0.25%, and state and local taxes at about 1.9%. Annualization would then be 20%. From Figure 16, it is seen that a 10 tph combustor will cost about $45,000 in its basic configuration, and probably about $60,000 when equipped with a suitable feed conveyance system and an appropriate traction assembly, neglecting engineering and design costs. Annualization would therefore be $1,000 per month assuming 100% utilization (plant factor). If the equipment were only used on spill clean-ups 30 working days per year, which is perhaps conservative, the annualization charge would be $5.00 per ton of sand, assuming an 8-hr work day.

If alternate schemes were developed to insure year-around use of the combustor, the annualization cost would drop to about $0.42/ton. This would require of course the utilization of the combustor in other practical process operations, as discussed later, when not needed for its primary purpose. Such an arrangement would be entirely feasible considering the function of the combustor, but probably impractical if the process in which it were alternatively used had to be shut down because of its sudden withdrawal for oil-spill emergencies.

Another aspect of the cost analysis that is difficult to quantify involves the loading and off-loading operations. Definite capital costs will be associated with the constant-feed input conveyor and the output system that will permit the cleaned sand to be disgorged at a reasonable distance away from the combustor. Design of such machinery was not attempted on the present feasibility study, except as indicated in footnote No. 15.

Operating costs will be involved in the loading of the feed conveyor hopper and removal of clean sand deposited by the output conveyor. No additional costs can be identified with this operation. At a typical

beach restoration site, front-end loaders would normally be deployed to remove contaminated sand piled up by graders. This material would then be deposited in trucks for outhaul or, in the present case, at the working site of the combustor. In the latter situation, the combustor would be fed directly by the front-end loader, at no cost penalty, if the load it had acquired had been resting on the berm for an hour or more. It seems reasonable to expect that the renovation could be managed in such a manner that this operation could be performed without incurring additional costs.

Returning cleaned sand to the surf would obviously be done by the same front-end loader(s) that furnish the input to the combustor. A problem in this arrangement would be that the shovels of the vehicles would probably be filthy and tend to recontaminate the renovated material. This could be prevented by applying a suitable coating to the shovels.

Finally, the actual operating costs of the combustor must be considered. These are shown in Table 10. There, basic operating costs are presented under worst case (A and B) conditions, wherein moist, oil-free sand is processed with and without recuperated heat (from a sand cooler). The further cost figures, based on realistic sand compositions[16], demonstrate that heat recuperation is not an important economic factor. Thus, the concept of cooling the output hot sand with sea water is probably worthy of serious consideration.

The cost data are based on the conceptual design configuration already described for a 10 ton/hr system. Although this system may actually prove to have a capacity of 30 ton/hr, the costs presented for the full-scale system (60 ton/hr) are based on the minimum expectancy. This 6:1 scale-up involved the assumption that the volumetric increase in the equipment would be a square root function of the increase in throughput. It can be seen that, using the full-scale system, with expectable input, operation and maintenance costs would be 54¢/ton to produce clean sand. If the input contained the anticipated average of 16 wt-% petroleum, this would represent a clean-up cost of about 1.3¢/gal of contaminant. About 45% of this cost would be labor; one full-time operator at $7.16/hr plus a — generously estimated — one-third time maintenance mechanic at $7.36/hr.

Fuel costs are based on the use of diesel oil available at 16¢/gal and a power (motor/generator set) draw of 45 hp for the 10-tph unit and 195 hp for the 60-tph unit. In the normal operating situation (Case C - self-sustained combustion), an auxiliary fuel allowance was included.

---

[16] As previously estimated, no auxiliary process heat will be required when the sand contains as little as 6 wt-% oil (dry basis); the amount expected from a typical excavation operation is about 16 wt-%. The difference in energy level is more than sufficient to dehydrate the sand, assuming it contains 6 wt-% moisture.

TABLE 10

Combustive Sand Cleaning Cost Estimates

Costs, $/ton	10 ton/hr System			60 ton/hr System		
Case:	A[1]	B[2]	C[3]	A[1]	B[2]	C[3]
Fuel	1.79	1.20	0.29	1.83	1.24	0.30
Labor	0.99	0.99	0.99	0.24	0.24	0.24
Total	2.78	2.19	1.28	2.07	1.48	0.54

[1] System without sand cooler processing oil-free sand (6 wt-% moisture)

[2] System with sand cooler processing oil-free sand (6 wt-% moisture)

[3] Either system processing contaminated sand (6 wt-% moisture) containing 6 or more percent of oily material

This was provided to permit the incinerator to be brought up to combustion temperature and be moved thrice a day without cooling. The assumption was that the system would be inoperative (cool) except for 8 hr/day and that it would require 1.75 hr of auxiliary fuel firing (under Case A demand) to promote stable operating conditions and 45 minutes of transit time. It is likely that only 10 or 15 minutes will actually be required for initial equilibration. In this case, the actual fuel consumption would be only about 10¢/ton in Case C operation, which would bring the total (basic) operating cost down to 34¢/ton.

Possible Secondary Uses of the Combustor: The present program has been aimed at a very specific and acute damage-control problem. The hardware described herein would hopefully have very limited opportunities of application. Like an ambulance, however, the annualization of the capital investment for the owner would have to be passed off as an unfortunate penalty to the sometime buyer of the equipment's service. This would predictably occur between periods of considerable inactivity. Secondary uses of the combustor thus would seem desirable to level this burden, but for the same reason that ambulances are not used to deliver groceries when idle, alternate utilization perhaps should be carefully considered.

Another constraint is that a combustive beach renovator would necessarily be a low capacity machine in order that it be deployable. It would therefore be of little interest to large-scale operators dealing with, say, ore-roasting, calcining, or process-slurry dehydration. In fact, it would doubtless be uneconomical to use in its primary function on beaches that had only experienced minor oil-spotting from the bilges of passing ships or from small, chronic submarine seeps.

Considered as a mobile incinerator, however, a number of specialty uses can be suggested that might be compatible, particularly on an interuptable basis. These include the following operations:

- Destruction of classified material
- Incineration of hospital wastes
- Neutralization of low-energy, toxic chemical/biological agents (military, agricultural, etc.)
- Disposal of contraband (narcotics and other smuggled goods)
- Rare-ore treatment
- Chemical waste disposal at special sites
- PHS destruction of infected articles in plague areas
- On-site clean-up of littered areas following heavily attended mass meetings of people.

SECTION VII

ACKNOWLEDGEMENTS

The Aerojet-Hirt program staff wishes to express its appreciation for the cooperation and guidance furnished by the FWQA Project Officer, Mr. Gerald Burke. We also extend our gratitude to Mr. J. D. Sartor of URS Research Co. who, on several occasions, furnished us with vitally needed information. The Program Manager also particularly wants to extend thanks for the help and suggestions offered by all of the individuals contacted on the field survey (Table 2).

SECTION VIII

REFERENCES

1. Oil Pollution, a Report to the President by the Secretaries of Interior and Transportation, February 1968.

2. Swift, W. H., Oil Spillage Study Literature Search and Critical Evaluation for Selection of Promising Techniques to Control and Prevent Damage, Battelle Memorial Institute Report on USCG Contract TCG-15560-A, 20 November 1967.

3. Merz, R. C., Part 1, Determination of the Quantity of Oily Substances on Beaches and in Nearshore Waters, State Water Pollution Control Board Publication No. 21, Sacramento, California (1959).

4. Rosen, A. A., L. R. Musgrave and J. J. Lichtenberg, Part 2, Characterization of Coastal Oil Pollution by Submarine Seeps, ibid.

5. A Primer on Oil Spill Cleanup, Brochure of the American Petroleum Institute Task Force on Oil Spill Cleanup, Committee for Air and Water Conservation, New York, N. Y., 1968.

6. El Incidente del OCEAN EAGLE, Office of Petroleum Emergencies, Department of Public Works Report, San Juan, Puerto Rico, July 1968.

7. The WITWATER Tanker Casualty, Smithsonian Tropical Research Institute Report, Balboa, C. Z. (undated).

8. Oil Slick Pollution, Minutes of Conference of Oil Slick Pollution of Harbours and Associated Waters, U.S. Coast Guard Headquarters, Washington, D. C., 18 March 1964.

9. Recommended Methods for Dealing with Oil Pollution, Warren Spring Laboratory Report No. LR 79 (EIS), June 1968.

10. Dennis, J. V., Oil Pollution Survey of the U.S. Atlantic Coast, Division of Transportation, American Petroleum Institute Report, Washington, D. C., 15 May 1959.

11. McGill, J. T., "Map of Coastal Land Forms of the World," Geographical Review, 48, 402-5 (1958).

12. Dubach, H. W., and M. A. Slessers, "An Evaluation of the Morskoi Atlas," Navy Hydrographic Office, March 1958.

13. King, C. A. M., "Beaches and Coasts," Edward Arnold, Ltd., London, 1959.

14. Zenkovich, V. P., "Processes of Coastal Development," Translation Ed. J. A. Steers, Interscience Publishers, 1967.

15. Putnam, W. C., et al, Natural Coastal Environments of the World, University of California Los Angeles Report on ONR Contract Nonr-233 (06), (1960).

16. Sunken Tanker Project Report, U. S. Coast Guard Report to the Secretary of Transportation (undated).

17. O'Sullivan, A. J., and A. J. Richardson, "The TORREY CANYON Disaster and Intertidal Marine Life," Nature, 214, 448-542 (1967).

18. Royce, W. F., "The Oil Danger is in the Clean Up," National Fisherman, April 1969.

19. "Slick Tricks," Ind. Bull. (A. D. Little, Inc.), 476, 1 (1969).

20. Analytical Characteristics of Oily Substance Found on Southern California Beaches, Engineering-Science, Inc., Report to the Western Oil and Gas Association, July 1960.

21. Sampling of Oily Substances on Southern California Beaches, ibid, November 1969.

22. Combating Pollution Created by Oil Spills, A. D. Little, Inc., Report No. 71386 (R) to the U.S. Coast Guard, 30 June 1969.

23. Fullerton, E. C., "Marine Enforcement - Oil Spills," paper presented at Western Assoc. Game & Fish Commissioners, Honolulu, Hawaii, July 1967.

24. T. H. Gaines, Notes on Pollution Control Santa Barbara, Union Oil Co. Internal Report, June 1969.

25. Swift, W. M., et al, Review of the Santa Barbara Channel Oil Pollution Incident, FWQA Report No. DAST-20, 18 July 1969.

26. Carpenter, C. E., L. F. Butcher and A. S. Huxley, Laboratory Examination of Materials Submitted for Treating the TORREY CANYON Oil Spill, Admiralty Oil Laboratory Report No. 51, Cobham, England, January 1969.

27. Report of the Ad Hoc Committee, State Regulations and Practices, Oil and Gas Operations and Oil Pollution, Report of the Resources Agency of California, June 1969.

28. Joint Report of the Resources Agency and State Lands Commission Requested in House Resolution 77 of the 1969 Regular Session California Legislature, (Report source defined in title), May 1969.

29. Montgomery, S., "Oil Pollution R&D on the Rise," Undersea Technology, 10 (10), 30 (1969).

30. Biglane, K. E., International Aspects of Oil Pollution Control, FWPCA Trip Report, November 1968.

31. Linsell, R. F., Disposal of Waste Oils and Solid Hydrocarbons Contaminated with Sand, Esso Petroleum Co. Internal Technical Memorandum, 29 March 1967.

32. Swift, W. H., et al, "Oil Spillage Prevention, Control, and Restoration - State of the Art and Research Needs," J. Water Poll. Control Fed., 41, 392-412 (1969).

33. Swift, W. H., C. J. Touhill and P. L. Peterson, "Oil Spillage Control," Chem. Eng. Prog., 65, 265-273 (1969).

34. Sartor, J. D. (URS Research Co.), Private Communication, 15 December 1969.

35. Perry, J. H., "Chemical Engineers Handbook," Fourth Edition, McGraw-Hill Book Co., Inc., 1963.

36. Treybal, R. E., "Mass-Transfer Operations," McGraw-Hill Book Co., Inc., 1955.

37. Anon., "Oil Spills: An Environmental Threat"; Environ. Sci. & Tech., 4, 97-99 (1970).

BIBLIOGRAPHIC:

Envirogenics Co., a Division of Aerojet-General Corporation, A Feasibility Analysis of Incinerator Systems for Restoration of Oil Contaminated Beaches, Final Report FWQA Contract No. 14-12-595, November 1970.

ABSTRACT

The feasibility of employing a combustion effect for restoring oil contaminated beaches was investigated. Beach access problems and the handling characteristics of shore materials limited the potential application to recreational (sand) sites. Thermodynamic arguments required that a system design be adopted in which the contaminated sand would undergo combustive processing in a confined arrangement. The design selected, from those analyzed, proved to be a three-effect combustor based on the rotary kiln principle. Provided that the sand to be cleaned is carefully enough collected to furnish a reasonable ($\geq 6\%$) oil content and is moved away from the surf and drained to an acceptable moisture level ($\leq 6\%$), processing costs would be highly attractive. In comparison with uncontaminated sand, the cleaned product exhibits only a slightly greyish hue.

KEY WORDS:

Beaches
Oil Wastes
Cleaning
Shore Protection
Shores
Coasts
Incineration
Oily Water

BIBLIOGRAPHIC:

Envirogenics Co., a Division of Aerojet-General Corporation, A Feasibility Analysis of Incinerator Systems for Restoration of Oil Contaminated Beaches, Final Report FWQA Contract No. 14-12-595, November 1970.

ABSTRACT

The feasibility of employing a combustion effect for restoring oil contaminated beaches was investigated. Beach access problems and the handling characteristics of shore materials limited the potential application to recreational (sand) sites. Thermodynamic arguments required that a system design be adopted in which the contaminated sand would undergo combustive processing in a confined arrangement. The design selected, from those analyzed, proved to be a three-effect combustor based on the rotary kiln principle. Provided that the sand to be cleaned is carefully enough collected to furnish a reasonable ($\geq 6\%$) oil content and is moved away from the surf and drained to an acceptable moisture level ($\leq 6\%$), processing costs would be highly attractive. In comparison with uncontaminated sand, the cleaned product exhibits only a slightly greyish hue.

KEY WORDS:

Beaches
Oil Wastes
Cleaning
Shore Protection
Shores
Coasts
Incineration
Oily Water

BIBLIOGRAPHIC:

Envirogenics Co., a Division of Aerojet-General Corporation, A Feasibility Analysis of Incinerator Systems for Restoration of Oil Contaminated Beaches, Final Report FWQA Contract No. 14-12-595, November 1970.

ABSTRACT

The feasibility of employing a combustion effect for restoring oil contaminated beaches was investigated. Beach access problems and the handling characteristics of shore materials limited the potential application to recreational (sand) sites. Thermodynamic arguments required that a system design be adopted in which the contaminated sand would undergo combustive processing in a confined arrangement. The design selected, from those analyzed, proved to be a three-effect combustor based on the rotary kiln principle. Provided that the sand to be cleaned is carefully enough collected to furnish a reasonable ($\geq 6\%$) oil content and is moved away from the surf and drained to an acceptable moisture level ($\leq 6\%$), processing costs would be highly attractive. In comparison with uncontaminated sand, the cleaned product exhibits only a slightly greyish hue.

KEY WORDS:

Beaches
Oil Wastes
Cleaning
Shore Protection
Shores
Coasts
Incineration
Oily Water

1 Accession Number	2 Subject Field & Group	SELECTED WATER RESOURCES ABSTRACTS INPUT TRANSACTION FORM
	ϕ 5E	

5 Organization

Envirogenics Co., Division of Aerojet-General Corporation, El Monte, California

6 Title

A Feasibility Analysis of Incinerator Systems for Restoration of Oil Contaminated Beaches,

10 Author(s)	16 Project Designation
Roberts, R. M., and Hoyt, T. S.	21 Note

22 Citation

23 Descriptors (Starred First)

*Beaches, *Oil Wastes, *Cleaning, Shore Protection, Shores, Coasts, Incineration, Oily Water

25 Identifiers (Starred First)

*Oil Spills, *Beach Decontamination, Combustion Processes

27 Abstract

The feasibility of employing a combustion effect for restoring oil contaminated beaches was investigated. Beach access problems and the handling characteristics of shore materials limited the potential application to recreational (sand) sites. Thermodynamic arguments required that a system design be adopted in which the contaminated sand would undergo combustive processing in a confined arrangement. The design selected, from those analyzed, proved to be a three-effect combustor based on the rotary kiln principle. Provided that the sand to be cleaned is carefully enough collected to furnish a reasonable ($\geq$ 6%) oil content and is moved away from the surf and drained to an acceptable moisture level ($\leq$ 6%) processing costs would be highly attractive. In comparison with uncontaminated sand, the cleaned product exhibits only a slightly greyish hue.

This report was submitted in fulfillment of Contract No. 14-12-595 between the Federal Water Quality Administration and the Envirogenics Co., Division of Aerojet-General Corporation.

Abstractor	Author	Institution	Envirogenics Company