BACKGROUND INFORMATION FOR THE NON-METALLIC MINERALS INDUSTRY

PEDCo ENVIRONMENTAL

PEDCo-ENVIRONMENTAL
SUITE 13 • ATKINSON SQUARE
CINCINNATI, OHIO 45246
513/771-4330

BACKGROUND INFORMATION

FOR THE NON-METALLIC

MINERALS INDUSTRY

Prepared by

PEDCo-Environmental Specalists, Inc.
Suite 13, Atkinson Square
Cincinnati, Ohio 45246

Contract No. 68-02-1321
Task No. 44

Prepared for

U.S. ENVIRONMENTAL PROTECTION AGENCY
Research Triangle Park, North Carolina 27711

August 31, 1976

BRANCH OFFICES

Suite 110, Crown Center
Kansas City, Mo 64108

Suite 107 B Professional Village
Chapel Hill, N C 27514

This report has been reviewed by the Environmental Protection Agency. Approval does not signify that the contents necessarily reflect the views and policies of the Agency, nor does mention of trade names of commercial products constitute endorsement or recommendation for use.

ACKNOWLEDGEMENT

Mr. James Eddinger was the Project Officer for the U.S. Environmental Protection Agency on this study. He was assisted by Mr. Gilbert Wood, also of the U.S. Environmental Protection Agency. Messrs. John Zoller and Fred Hall, were the principal authors of this report; Richard Gerstle served as project manager for PEDCo.

TABLE OF CONTENTS

		Page
ACKNOWLEDGMENT		iii
1.0	THE NON-METALLIC MINERALS INDUSTRY	1-1
2.0	MINERALS PROCESSING, EQUIPMENT, AND EMISSIONS	2-1
2.1	Process Description	2-1
2.2	Mining Operations and Crushing Plant Process Facilities	2-40
2.3	Equipment Life	2-69
2.4	Mining and Crushing Plant Emissions	2-73
3.0	EMISSION CONTROL TECHNIQUES	3-1
3.1	Control of Mining and Quarrying Operations	3-1
3.2	Control of Plant Process Operations	3-9
3.3	Control of Fugitive Dust Sources	3-30
3.4	Factors Affecting the Performance of Control Systems	3-36
4.0	STATE AND LOCAL AIR POLLUTION CONTROL REGULATIONS	4-1
5.0	ESTIMATED NEW SOURCE PERFORMANCE STANDARD EMISSION REDUCTIONS	5-1
5.1	New Source Performance Standard (NSPS) Analysis Method	5-1
5.2	Input Variables for NSPS Emission Impact Determination	5-5
5.3	NSPS Emission Reductions	5-12

TABLE OF CONTENTS (continued).

		Page
6.0	MODIFICATIONS AND RECONSTRUCTION	6-1
6.1	General	6-1
6.2	Applicability of 40 CFR 60.14 and 60.15 to the Non-metallic Mineral Industry	6-6
APPENDIX A	INDUSTRY CAPACITY GROWTH RATES, P_C	A-1
APPENDIX B	MODEL PLANT PROCESS WEIGHT DETERMINATION	B-1
APPENDIX C	CONTROL DEVICE FLOW RATE REQUIREMENTS	C-1
APPENDIX D	CALCULATION OF ALLOWABLE EMISSIONS UNDER STATE REGULATIONS	D-1
APPENDIX E	INDUSTRY CAPACITY MODIFICATIONS	E-1
APPENDIX F	LIST OF CONTACTS	F-1

LIST OF FIGURES

No.		Page
2-1	General Non-Metallic Minerals Processing	2-4
2-2	Index of Equipment Symbols Used in Process Diagrams	2-5
2-3	Barite Processing	2-8
2-4	Borate Processing	2-10
2-5	Bentonite and Fuller's Earth Processing	2-13
2-6	Kaolin Processing	2-14
2-7	Ball Clay Processing	2-16
2-8	Common Clay Processing	2-17
2-9	Shale Processing	2-20
2-10	Diatomite Processing	2-22
2-11	Feldspar Processing	2-24
2-12	Gypsum Processing	2-26
2-13	Perlite Processing	2-29
2-14	Slag Processing	2-31
2-15	Vermiculite Processing	2-33
2-16	Pumice Processing	2-34
2-17	Sand and Gravel Processing	2-37
2-18	Talc Processing	2-39
2-19	Double-Toggle Jaw Crusher	2-46

LIST OF FIGURES (continued).

No.		Page
2-20	Single Toggle Jaw Crusher	2-46
2-21	The Pivoted Spindle Gyratory	2-49
2-22	Cone Crusher	2-49
2-23	Double-Roll Crusher	2-52
2-24	Single-Roll Crusher	2-52
2-25	Hammermill	2-55
2-26	Impactor	2-55
2-27	Ball Mill	2-57
2-28	Fluid-Energy Mill	2-57
2-29	Vibrating Grizzly	2-61
2-30	Vibrating Screen	2-61
2-31	Conveyor Belt Transfer Point	2-66
2-32	Bucket Elevator Types	2-66
2-33	Schematic of a Spiral Washer	2-70
2-34	Particle Size Distribution Curves	2-82
3-1	Wet Dust Suppression System	3-14
3-2	Dust Suppression Application at Crusher Discharge	3-16
3-3	Hood Configuration for Conveyor Transfer, Less than 0.91 Meter Fall	3-19
3-4	Hood Configuration for a Chute to Belt or Conveyor Transfer, Greater than 0.91 Meters Fall	3-20
3-5	Exhaust Configuration at Bin or Hopper	3-21

LIST OF FIGURES (continued).

No.		Page
3-6	Hood Configuration for Vibrating Screen	3-22
3-7	Hood Configuration Used to Control a Cone Crusher	3-25
3-8	Bag Filling Vent System	3-27
3-9	Combination Dust Control Systems	3-29
6-1	Method of Determining Whether Changes to Existing Facility Constitute a Modification or Reconstruction Under 40 CFR 60.14 and 60.15	6-2

LIST OF TABLES

No.		Page
1-1	Industry Production, Capacity and Growth Projections	1-2
1-2	Production of Clay by Type	1-4
1-3	Production of Slag by Type	1-4
2-1	Relative Crushing Mechanism Utilized by Various Crushers and Grinders	2-44
2-2	Approximate Capacities of Jaw Crushers	2-48
2-3	Approximate Capacities of Gyratory Crushers	2-28
2-4	Performance Data for Cone Crushers	2-51
2-5	Estimated Life of Equipment	2-71
2-6	Emission Sources from Mineral Processing Operations	2-74
2-7	Mineral Processing Emission Factors, kg/Metric Ton	2-75
2-8	Particulate Emission Factors for Stone Crushing Processes	2-76
3-1	Particulate Emission Sources and Control Options	3-2
4-1	Industrial Process Particulate Emissions Regulations by State	4-2
4-2	Maximum Allowable Emissions from Industrial Processes for Existing Sources in Los Angeles, District of Columbia, and Maryland, and all Sources in Vermont	4-4
4-3	Maximum Allowable Emissions from Industrial Processes for New Sources in Los Angeles	4-5

LIST OF TABLES (continued).

No.		Page
4-4	Maximum Allowable Emission Rate from Industrial Processes in New Jersey	4-6
4-5	Maximum Allowable Emissions from Pumice, Mica, and Perlite Processes in New Mexico	4-7
4-6	Maximum Allowable Emissions from Industrial Processes in West Virginia	4-8
5-1	Typical Non-Metallic Mineral Processing Facilities	5-7
5-2	Calculation of NSPS Impact 1975-1985, English Units	5-13
5-3	NSPS Impact on Emissions, 1975-1985, Metric Units	5-14
6-1	Annual Asset Guideline Repair Allowance Percentages for Specified Facilities per IRS Publication 534 1975 Edition	6-5

1.0 THE NON-METALLIC MINERALS INDUSTRY

This study presents background information pertinent to the development of atmospheric emission limits under Federal New Source Performance Standards (NSPS) for processes handling the following minerals:

Barite
Borate
Clay
Diatomite
Feldspar
Gypsum
Lightweight aggregates (including: expanded perlite, slag, and vermiculite)
Pumice
Sand and gravel
Talc and soapstone

This background information only applies to particulate emissions from the mining, sizing, crushing, and handling operations. Handling includes conveying, bagging and loading. The process steps involving heating will not be addressed in this report, although it is recognized that these may be significant sources of particulate and at times gaseous emissions.

1.1 INDUSTRY BACKGROUND

Industry characteristics for each mineral are presented in Table 1-1. The data for production, capacity, value, and

Table 1-1. INDUSTRY PRODUCTION, CAPACITY AND GROWTH PROJECTIONS

Mineral	1975[a] value, million $	1974[b] production, 1000 MT (1000 tons)	1974[b] capacity, 1000 MT (1000 tons)	Capacity utilization r	1975[a] production, 1000 MT (1000 tons)	1975 capacity, 1000 MT (1000 tons)	1985[b] production, 1000 MT (1000 tons)	1985 capacity, 1000 MT (1000 tons)	Capacity growth rate, R_c	Major producing states in order of production[a] prod 1000 MT/yr (prod 1000 tons/yr)	Year
Barite[d]	17.4	1,003[e] (1,106)	1,215[g] (1,339)	0 83	958 (1,056)	1,159 (1,278)	777[a] (857)	937 (1,033)	-0 021c	Nevada 656 (723) Missouri 176 (194) Arkansas, California, Georgia, Idaho, Tennessee 126 (139)	75
Borate	153	1,075 (1,185)	1,173[h] (1,291)	0.92	998 (1,100)	1,174 (1,294)	1,868[h] (2,059)	2,030 (2,238)	0 056c	California 998 (1,100)	75
Clay	401	55,417 (61,087)	-	0 8[f]	46,200 (50,900)	69,300 (76,400)	63,500[j] (70,000)	79,400 (87,500)	0 014c	Georgia 6,978 (7,692) Texas 4,822 (5,315) Ohio 3,924 (4,325) North Carolina 3,104 (3,422) Alabama 2,717 (2,995) Pennsylvania 2,478 (2,732)	74
Diatomite	41 9	602 (664)	907 (1,000)	0 66	514 (567)	907 (1,000)	907 (1,000)	1,374 (1,515)	0 042c	California, Kansas[f] Nevada, Oregon, Washington	75
Feldspar	12	694[k] (765)	862[l] (950)	0.81	621[k] (685)	862 (950)	855[l] (942)	1,055 (1,163)	0 020c	North Carolina (~50%) Connecticut, Georgia, California, South Dakota	75
Gypsum	45 4	10,900 (12,000)	13,600 (15,000)	0 80	8,890 (9,800)	13,600 (15,000)	13,600 (15,000)	17,200 (19,000)	0 024c	California 1,313[r] (1,447) Michigan 1,110 (1,224) Iowa 1,096 (1,208) Texas 992 (1,094) Oklahoma 933 (1,028)	75
Perlite[m]	7.0	503 (555)	630 (694)	0.8[n]	448 (494)	630 (694)	726[l] (800)	907 (1,000)	0 037c	New Mexico (85%) Arizona, California, Colorado, Idaho, Nevada	75
Slag	79 3[t]	35,146 (38,742)	45,644 (50,314)	0.77[u]	-	45,644 (50,314)	-	53,495 (58,969)	0 016c	Pennsylvania 6,089[e] (6,712) Ohio 5,542 (6,109) Illinois, Indiana, Michigan 6,083 (6,705)	74
Vermiculite	14	309 (341)	386 (425)	0.80	308 (340)	386 (425)	522 (575)	652 (719)	0 054c	Montana (~75%)[s] South Carolina (~25%)	75
Pumice, pumicite, and volcanic cinder	10 8	3,572[e] (3,937)	-	0 8[o]	3,735 (4,117)	4,668 (5,146)	5,530[l] (6,100)	6,917 (7,625)	0 040c	Oregon 830[e] (915) California 825 (909) Arizona 767 (846) New Mexico 427 (471) Hawaii 349 (385) Idaho 98 (108)	74
Sand and gravel	1,300	888,000 (979,000)	1,116,000 (1,230,000)	0 80	781,000 (861,000)	1,140,000 (1,260,000)	1,260,000 (1,390,000)	1,577,000 (1,738,000)	0 033c	Alaska 10,661[e] (117,752) California 95,427 (105,191) Michigan 54,455 (60,027) Illinois 38,741 (42,705) Texas 38,524 (42,466) Ohio 37,515 (41,353)	74
Talc, soapstone, and pyrophyllite	11 1[p]	1,150 (1,268)	1,161 (1,280)	0.99	998 (1,100)	1,161 (1,280)	1,540 (1,700)	1,559 (1,718)	0 033c	Vermont 228[q] (251) Texas 210 (232) California 162 (179) North Carolina 87 (96) Georgia 34 (38)	73

MT = metric tons

[a] Mineral Industry Survey Preliminary Annual Report for the appropriate mineral (References 1 through 12) except as noted.

[b] Projections from the Mineral Facts and Problems, 1975 Edition, (References 13 through 18) except as noted.

[c] Denotes compound growth rate

[d] Tons of barium were divided by 0 56 per Reference 19.

[e] Projections from 1974 Bureau of Mines Minerals Yearbook.

[f] Production by state confidential Assumed to be equally distributed.

[g] Reference 19

[h] "Tons of boron content" from Reference 13, were divided by 0 17 to obtain an estimate of borate minerals.

[i] Reference 21.

[j] Reference 22

[k] Reference 23.

[l] Reference 24

[m] Units of crude perlite sold or used.

[n] Assumed to be similar to vermiculite capacity utilization.

[o] Average of all known capacity utilization factors.

[p] Data unavailable for 1975 1971 value obtained from Reference 25.

[q] Projections from 1973 Bureau of Mines Minerals Yearbook, Reference 29.

[r] Reference 30

[s] Reference 31

[t] Data unavailable for 1975 1971 value obtained from Reference 11

[u] Capacity utilization factor for the iron and steel industry, Reference 28.

leading producing states were obtained from the U.S. Bureau of Mines. In addition, capacity utilizations and industry growth rates are shown on the table. These data are discussed in the following sections.

Because of the many different types of clays and slags, it was difficult to combine all types under the general mineral heading. The different types of each mineral and the different processing steps are explained in more detail in Chapter 2.0. The production by type for clay and slag are given in Tables 1-2 and 1-3 respectively.

1.1.1 Capacity Utilization

The capacity utilization factor, K, is the ratio of the production of a given mineral industry to that industry's capacity in the same year. It must be understood that "capacity" as applied to these minerals is a vague term. There is no standard method used by the Bureau of Mines for determining the capacity of an industry. Instead, the capacity is determined from the best available data.

In calculating the K values shown in Table 1-1, 1974 data were used because only sand and gravel capacity figures were available for 1975. Except as explained below, the 1974 production and capacity data were obtained from preprints of the 1975 Edition of Mineral Facts and Problems, or from telephone conversations with U.S. Bureau of Mines personnel.

Table 1-2. PRODUCTION OF CLAY BY TYPE

Clay type	1974 production	
	1000 metric tons[3]	1000 tons[3]
Kaolin	5,800	6,393
Ball clay	741	817
Fire clay	3,757	4,141
Bentonite	3,003	3,310
Fuller's earth	1,111	1,225
Common clay and shale	41,005	45,201
Total	55,417	61,087

Table 1-3. PRODUCTION OF SLAG BY TYPE

Slag type	1974 production	
	1000 metric tons[11]	1000 tons[11]
Iron blast-furnace		
Air-cooled screened	23,185	25,557
Air-cooled unscreened	607	669
Granulated	1,888	2,081
Expanded	1,427	1,573
Steel	8,039	8,862
Total	35,146	38,742

Capacity data were not available for clay, possibly because of the many different types of clay. For perlite and pumice, the data are confidential and can not be released by the Bureau of Mines. Statistics on slag are kept mainly by the National Slag Association; a representative there stated that the capacity for slag can not be defined.

Several assumptions were made in estimating K for these minerals. It was assumed that a capacity utilization for slag is approximately equivalent to that for steel.[26] Data for 1975 from the Bureau of Mines were used to calculate K for steel.[27,28] The K for perlite was assumed approximately equal to vermiculite, another lightweight aggregate, as their end uses are similar. To estimate K for pumice, an average was taken of K's for all other minerals that could be calculated directly without estimation. For clay a value of 0.8 was obtained from the Survey of Current Business.[21]

In the sand and gravel industry, where both capacity and production were known for 1974 and 1975, the K calculated for 1974 was used as the more representative value since production in 1975 was unusually low. Since sand and gravel capacity was reported for 1975, that value was used in the projections. The K values calculated using 1974 data were compared with K values calculated with data from

earlier years, and the 1974 data were found to be representative.

1.1.2 Industry Capacity Growth Rate

For most cases, 1985 production projections were available along with 1974 capacity and production figures. Growth rates for capacity were estimated several ways depending upon whether production increased or decreased between 1974 and 1975, the general production trend of the particular mineral, and the availability of data for that mineral. Production projections were used, rather than capacity projections, as they were more readily available.

Production of most minerals covered by this report declined from 1974 to 1975, while the long-range trend was upward. With some exceptions, 1974 reported capacity of each industry was assumed to be the same in 1975. This was because a decline in production for 1975 probably did not cause a significant decrease in capacity. The ratio of 1974 production to 1974 capacity was used to calculate the normal fractional utilization rate of existing capacity, K. This value and the projected 1985 production were used to estimate 1985 capacity. The compound growth rate of industry capacity, P_C, was then calculated between the 1975 and 1985 capacities.

Barite ore is notably different in that it has projected a decrease in production to 1985. The 1975 capacity

for this industry was calculated by assuming that the production drop from 1974 to 1975 would cause decreased capacity due to the long-term downward trend. The 1985 projected capacity and the 1975 capacity were then used to calculate a decreasing P_c.

The other exceptions were perlite, pumice, clay, and slag. Pumice production increased from 1974 to 1975, following projected trends. An estimated capacity utilization factor, K, was used to approximate 1975 and 1985 capacities from production estimates in both years. The growth rate was then calculated using the 1975 and 1985 capacities.

Capacity data were also unavailable for perlite and clay. Production of these minerals declined from 1974 to 1975. Estimated capacity utilization constants were then used to compute 1974 and 1985 capacity data and, as before, capacities for 1974 were assumed equal to those for 1975. Capacity growth rates were then calculated.

Slag was projected by using the growth rate for the steel industry since slag production closely parallels steel production.[26] The capacity utilization constant, K, for steel was used to calculate 1974 capacity for slag production. A decrease in steel output for 1975 probably caused slag output but not capacity, to decline, so 1974 capacity was assumed to equal 1975 capacity. The compounded his-

torical growth rate for steel was then used to project 1975 capacity to 1985.[27]

For the sand and gravel industry, production was projected to 1985 and the K value used to determine capacity in that year. Using that value and the known capacity for 1975, the growth rate was calculated.

Calculations for the industry capacity growth rates, P_C, are presented in Appendix A and summarized in Table 1-1.

REFERENCES FOR CHAPTER 1.0

1. Mineral Industry Surveys, "Barite in 1975." U.S. Department of the Interior, Bureau of Mines. Washington, D.C., 1975.

2. Mineral Industry Surveys, "Boron in 1975." U.S. Department of the Interior, Bureau of Mines. Washington, D.C., 1975.

3. Mineral Industry Surveys, "Clays in 1975." U.S. Department of the Interior, Bureau of Mines. Washington, D.C., 1975.

4. Mineral Industry Surveys, "Diatomite in 1975." U.S. Department of the Interior, Bureau of Mines. Washington, D.C., 1975.

5. Mineral Industry Surveys, "Feldspar and Related Minerals in 1975." U.S. Department of the Interior, Bureau of Mines. Washington, D.C., 1975.

6. Mineral Industry Surveys, "Gypsum in 1975." U.S. Department of the Interior, Bureau of Mines. Washington, D.C., 1975.

7. Mineral Industry Surveys, "Pumice and Volcanic Cinder in 1975." U.S. Department of the Interior, Bureau of Mines. Washington, D.C., 1975.

8. Mineral Industry Surveys, "Sand and Gravel in 1975." U.S. Department of the Interior, Bureau of Mines. Washington, D.C., 1975.

9. Mineral Industry Surveys, "Talc, Soapstone, and Pyrophyllite in 1975." U.S. Department of the Interior, Bureau of Mines. Washington, D.C., 1975.

10. Mineral Industry Surveys, "Vermiculite in 1975." U.S. Department of the Interior, Bureau of Mines. Washington, D.C., 1975.

11. Mineral Industry Surveys, "Slag Iron and Steel in 1974." U.S. Department of the Interior, Bureau of Mines. Washington, D.C., 1975.

12. Mineral Industry Surveys, "Vermiculite in 1975." U.S. Department of the Interior, Bureau of Mines. Washington, D.C., 1975.

13. Preprint from Mineral Facts and Problems, 1975 Edition, "Boron." U.S. Department of the Interior, Bureau of Mines. Washington, D.C., 1976.

14. Preprint from Mineral Facts and Problems, 1975 Edition, "Diatomite." U.S. Department of the Interior, Bureau of Mines. Washington, D.C., 1976.

15. Preprint from Mineral Facts and Problems, 1975 Edition, "Gypsum." U.S. Department of the Interior, Bureau of Mines. Washington, D.C., 1976.

16. Preprint from Mineral Facts and Problems, 1975 Edition, "Sand and Gravel." U.S. Department of the Interior, Bureau of Mines. Washington, D.C., 1976.

17. Preprint from Mineral Facts and Problems, 1975 Edition, "Talc, Soapstone, and Pyrophyllite." U.S. Department of the Interior, Bureau of Mines. Washington, D.C., 1976.

18. Preprint from Mineral Facts and Problems, 1975 Edition, "Vermiculite." U.S. Department of the Interior, Bureau of Mines. Washington, D.C., 1976.

19. Personal communication: Mr. Stan Haines, Bureau of Mines, Washington, D.C., and Darrel Powell, PEDCo-Environmental Specialists, April 27, 1976.

20. Commodity Data Summaries, 1976. U.S. Department of the Interior, Bureau of Mines. Washington, D.C., 1976.

21. Survey of Current Business. U.S. Department of Commerce, Social and Economic Statistics Administration, Bureau of Economic Analysis. Volume 54, No. 7, July 1974.

22. Predicasts, 1975 Annual Cumulative Edition, Predicasts, Inc., Cleveland, Ohio, 1976.

23. Personal communication: Mr. Mike Potter, Bureau of Mines, Washington, D.C., and Darrel Powell, PEDCo-Environmental Specialists, April 28, 1976, unpublished.

24. Personal communication: correspondence from A. C. Meisinger, Bureau of Mines, Washington, D.C.

25. Mineral Industry Surveys, "Talc, Soapstone, and Pyrophylite in 1974." U.S. Department of the Interior, Bureau of Mines, Washington, D.C., 1975.

26. Personal communication: General Howard Eggleston, National Slag Association, Alexandria, Virginia, and Darrel Powell, PEDCo-Environmental Specialists, May 14, 1976.

27. Personal communication: Mr. Horace T. Reno, Bureau of Mines, Washington, D.C., and Darrel Powell, PEDCo-Environmental Specialists, May 14, 1976.

28. Mineral Industry Surveys, "Iron and Steel in 1975." U.S. Department of the Interior, Bureau of Mines. Washington, D.C., 1975.

29. Minerals Yearbook Vol. 1, 1973 Edition. Washington, D.C., U.S. Bureau of Mines, 1975. 1383 p.

30. Personal communication: Mr. Avery Reed, Bureau of Mines, Washington D.C., and Darrel Powell, PEDCo-Environmental Specialists, Inc., June 2, 1976.

31. Personal communication: Mr. Richard Singleton, Bureau of Mines, Washington, D.C., and Darrel Powell, PEDCo-Environmental Specialists, Inc., June 3, 1976.

2.0 MINERALS PROCESSING, EQUIPMENT, AND EMISSIONS

2.1 PROCESS DESCRIPTION

Non-metallic mineral processing involves extraction, dumping, conveying, primary screening and crushing, secondary screening and crushing, milling, and classifying. Some minerals processing also includes washing, drying, or calcining operations. The operations performed are dependent on the rock type and the desired product.

The mining techniques used for the extraction of non-metallic minerals vary with the type of mineral, the nature of the deposit, and the location of the deposit. Both underground and above ground mining are used. Some minerals require blasting while others can be removed by bulldozer or dredging operations. The predominant mining methods used for each mineral are briefly discussed in the following sections.

The non-metallic minerals are normally delivered to the processing plant by truck and dumped into a coarse ore bin which typically feeds the minerals as required to screens or a vibrating grizzly type feeder. These scalp or separate the larger boulders that must be crushed from the finer rocks that do not require primary crushing, thus minimizing

the load of the primary crusher. Jaw or gyratory crushers are usually used for initial reduction, although impact crushers are gaining favor for crushing low abrasion rock types (like talc) and where high reduction ratios are desired. The crusher product (normally 7.6 to 30 cm. [3 to 12 inches] in size) and the grizzly throughs are discharged onto a belt conveyor and normally transported either to secondary screens and crusher or to a surge pile or silo for temporary storage.

The secondary screens generally separate the process flow into either two or three fractions (oversize, undersize, and throughs) prior to the secondary crusher. The oversize is discharged to the secondary crusher for further reduction. The undersize, which requires no further reduction at this stage, normally by-passes the secondary crusher, and thus, reduces its crushing load. A third fraction, the throughs, is separated when processing some minerals. Throughs contain unwanted fines and screenings and are usually removed from the process flow and stockpiled as crusher-run material. For secondary crushing, gyratory or cone crushers are most commonly used, although impact crushers are used at some installations.

The product from the secondary crushing stage, usually 2.5 cm. (one inch) or less in size, is normally transported

to a fine ore bin which supplies the tertiary crushing or milling stage. Cone crushers or rod mills, ball mills, and hammermills, are normally used. The product from the mill is usually conveyed to some type of classifier such as a dry vibrating screen system or a wet rake or spiral system. The oversize is returned to the mill for further size reduction. At this point, some mineral end products of the desired grade are chuted directly to finished product bins or are stockpiled in open areas by conveyors or trucks. Other minerals such as talc or barite may require air classification to get the required mesh size, and treatment by flotation to get the necessary chemical purity and color.

Most non-metallic minerals require other processing depending on the rock type and consumer requirements. Some minerals, especially certain lightweight aggregates, are washed and dryed, sintered, or treated prior to primary crushing. Others may be dried following secondary crushing or milling. Sand and gravel and most lightweight aggregates normally do not need milling and are screened and shipped to the consumer after secondary crushing. Figure 2-1 shows a simplified diagram of the typical process steps required for the non-metallic minerals studied in this report. Figure 2-2 is an index of the equipment symbols used in the process diagrams.

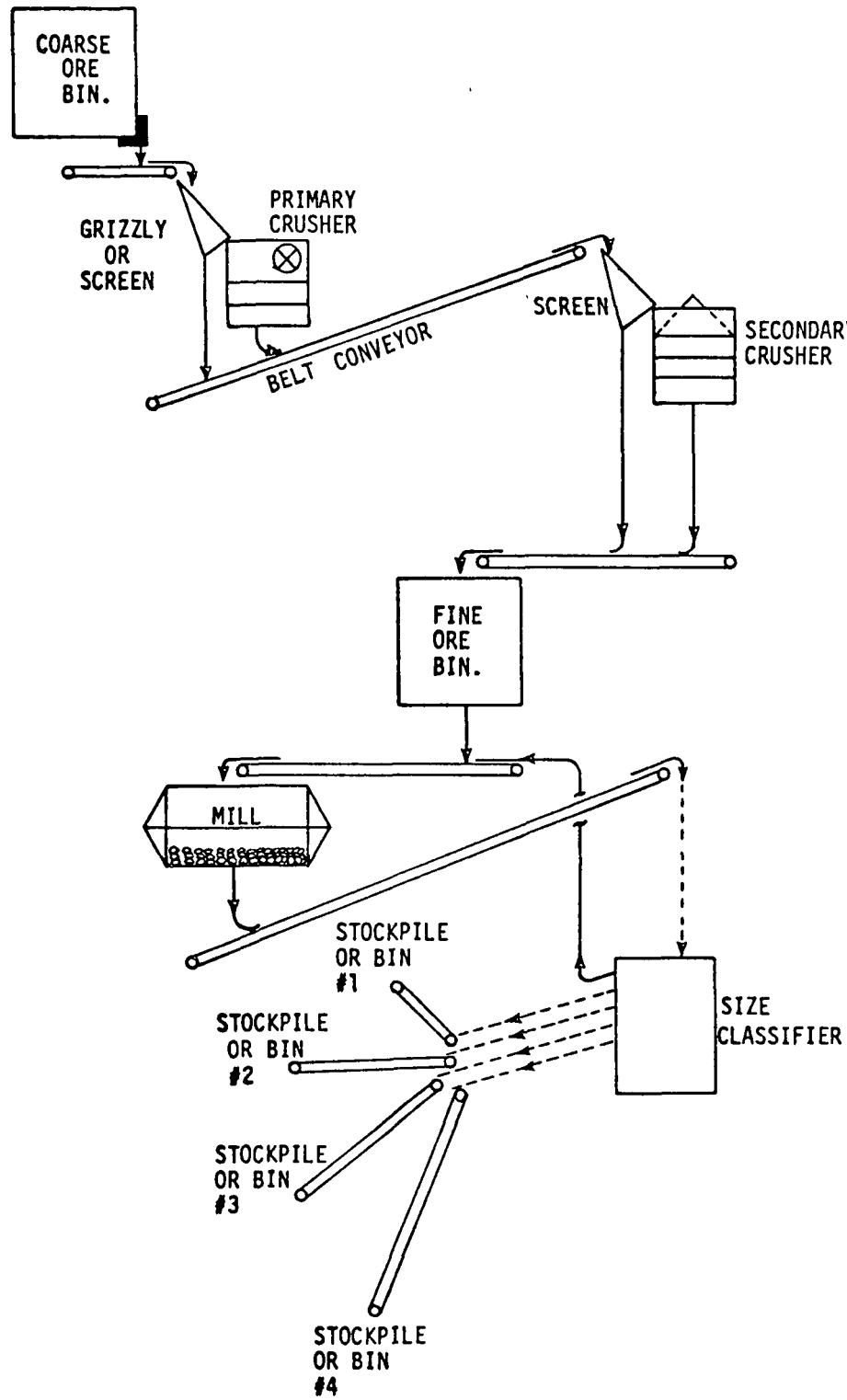

Figure 2-1. General non-metallic minerals processing.

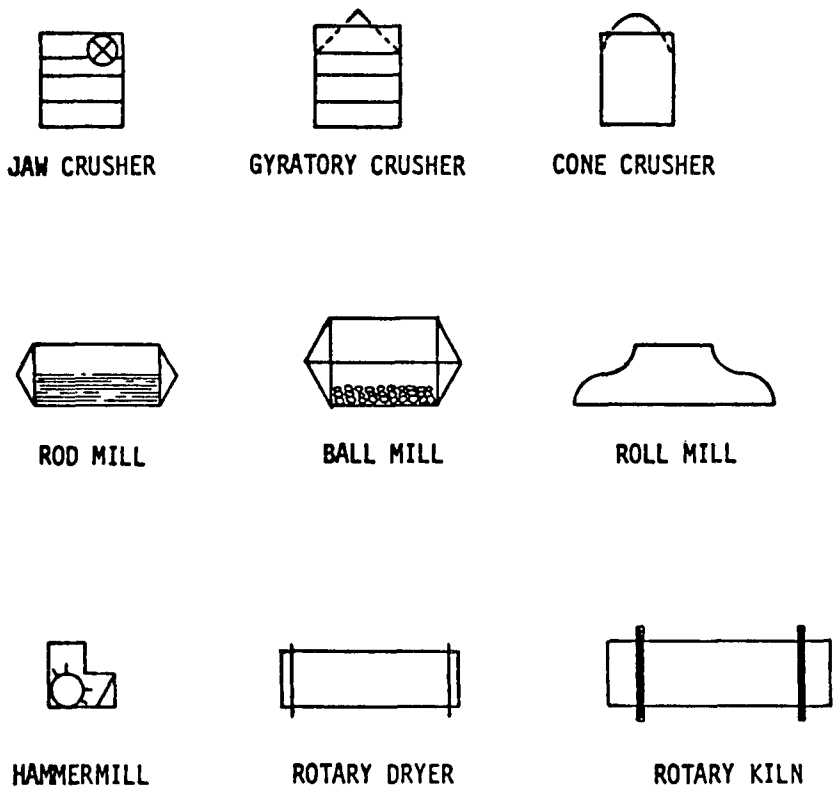

Figure 2-2. Index of equipment symbols used in process diagrams.

Particulates are the major atmospheric pollutant of concern in the non-metallic mineral industry. Drilling, blasting, loading, and hauling are all potential sources of particulate emissions during mining. The main points of emissions from processing operations are the screens, crushers and grinders, transfer points, and bagging operations. Fugitive emissions from conveyors, storage piles, and loading/ unloading operations may also be significant. Dryers, calciners, and sinter plants are also potential significant sources of emissions at plants which include these processes. However, the scope of this study does not include emissions from these combustion sources.

2.1.1 Barite

Barite which can be competitively mined occurs in veins, in bedded cavity fillings, and mainly in residual deposits. These deposits are generally mined by open pit methods and transported to the mill by trucks. Some barite deposits require blasting but most can be recovered with power shovels.

Barite is typically separated from gangue before crushing by forcing the ore through rotary breakers with high pressure water sprays. This is followed by a log washer and jig to remove the remaining gangue. After washing and dewatering the barite is wet ground with a ball

mill, screened and sized. Some ore may require dry crushing with jaw and cone crushers prior to grinding and classifying. After classification, it is concentrated by flotation, dried, and bagged for consumer use. Figure 2-3 shows a schematic for barite processing.

The useful forms of barite are crude lumps, aggregates, and powders. Generally, 98 percent of the product should pass through 0.074 mm (200 mesh) and 90-95 percent should pass through 0.044 mm (325 mesh) screen.[1] Eighty percent is used as an ingredient in drilling mud.[2] Other uses are the manufacture of barium chemicals and glass, and as a pigment, filler, and extender. Tailings pond wastes from barite processing are also used for road and dam construction.

2.1.2 Borates

Borax ($Na_2B_4O_7 \cdot 10\ H_2O$) and colemanite ($Ca_2B_6O_{11} \cdot 5\ H_2O$) ores, the principal boron containing minerals, are found as sediments in Pliocene lake beds. These deposits contain boron in the oxide form along with major amounts of other salts of sodium, potassium and magnesium. Open pit methods are used to mine dry deposits of these minerals and the ore is transported to the mill by trucks. Blasting is necessary to mine the ore. Borates are also recovered from the brine of Searles Lake, California by either the evaporation or the carbonation process. Each of these wet methods recover

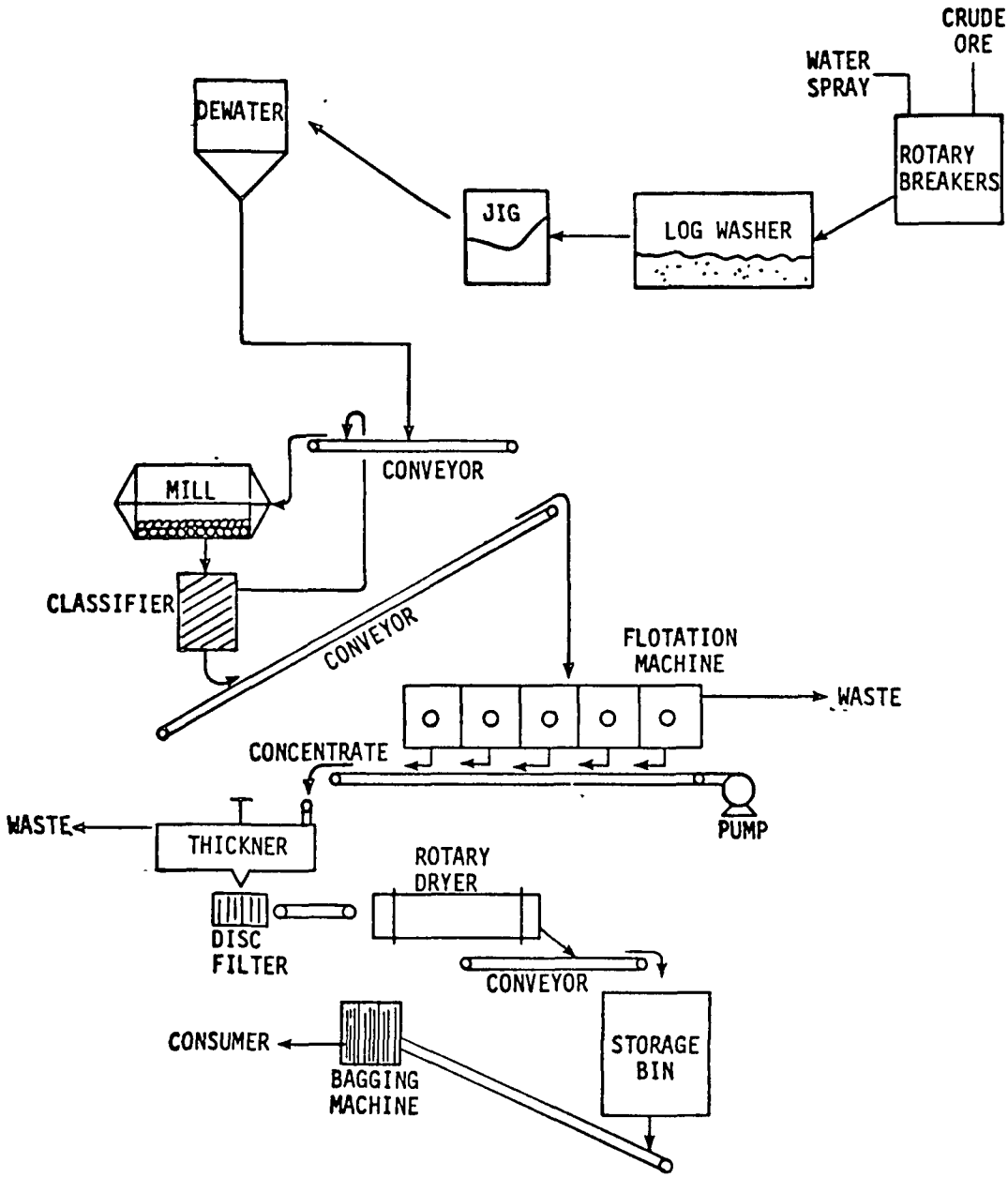

Figure 2-3. Barite processing.

borax by crystallization and have little particulate emission potential. The crystallized product is then dried and perhaps ground to produce the desired product.

Borax ores mined at one U.S. plant are crushed to -20 cm (-8 inches) in a hammermill located at the pit and conveyed to a stockpile.[2] The ore is then run through a secondary impact crusher (hammermill), screened to -2.5 cm (-1 inch), and stored until used at a refinery. During refining, the crushed ore is purified by dissolving the ore followed by crystallization. The resultant crystals are then dried and ground to produce marketable borax decahydrate and borax pentahydrate. At another plant which mines colemanite, the ore is rough screened at the mine and trucked to the processing plant.[2] At the plant, the ore is screened to remove -0.25 mm (-60 mesh) fines, crushed to -2.5 cm (-1 inch) and screened again. The sized mineral is then calcined, cleaned, and bagged or loaded for shipment. This method yields a product of about 0.044 mm (325 mesh). Figure 2-4 shows typical processing steps for borates.

Borate products are used in glass, ceramics, soaps, metal alloys, and agricultural chemicals. Wastes from mineral processing are dumped in a tailings pond.

2.1.3 Clay

Various minerals are classified as clays. Clays can be generally defined as a natural earthy, fine grained material

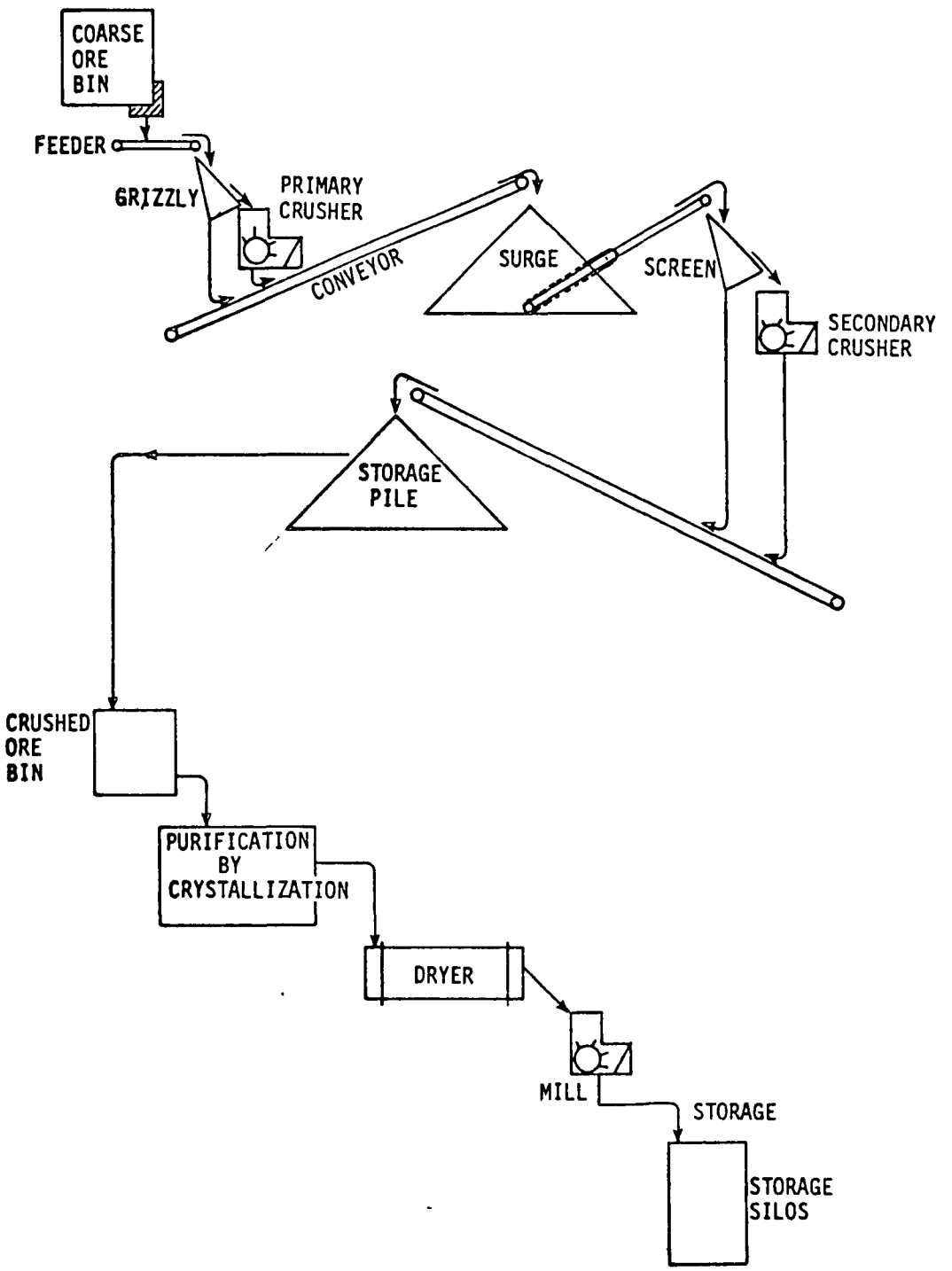

Figure 2-4. Borate processing.

composed mostly of hydrous silicates. Many of these minerals contain significant quantities of iron, alkalies, and alkaline earths.[2] Some of the more useful clays are:

- ball clay
- bentonite
- fire clay
- fuller's earth
- kaolin
- shale
- common clay

They are found in deposits resulting from hydrothermal alteration, weathering and sedimentation. Most clays are mined by open pit or strip methods. However, a few mines are underground. Trucks haul the mined clay to a clay mill.

2.1.3.1 Bentonite and Fuller's Earth - Bentonite and fuller's earth are mined and processed similarly. Strip mining methods are generally employed with the minerals being removed by endloaders or dragline. However, some mines may require blasting to remove overburden. Only one bentonite mine in the U.S. uses underground mining.

Processing involves the removal of water or other volatile matter followed by grinding. Generally, raw clay is first passed through either a clay slicer, a roll crusher, or a hammermill to break up the large chunks. After screening, the clay is then dried in a rotary dryer to remove excess moisture. Some plants have rods in the rotary dryers to do most of the grinding but most plants grind the dried

clay with roll mills or hammermills before additional screening. Bentonite and fuller's earth are mostly ground to 90 percent finer than 0.074 mm (200 mesh). Granular grades of these clays are also produced to a smaller extent. Bentonite and fuller's earth can be transported in bulk, bagged, or packed in drums for use by consumers. Figure 2-5 shows a simplified flow diagram for processing bentonite and fuller's earth.

2.1.3.2 Kaolin - Kaolin is processed by wet and dry methods. Dry clay is mined in open pits using equipment such as shovels and pan scrapers. Blasting is not required. The dry clay is trucked to the processing plant where it can be crushed, dried in rotary dryers, milled by hammermill and screened. Air floating is often the final step to remove most of the grit. The dry process yields a lower quality product than the wet process and the product is generally used to produce refractory products. Kaolin processing is shown in Figure 2-6.

For the wet process, kaolin is mined by draglines or pan scrapers in an open pit. The mined kaolin is hauled to the mill by trucks or is slurried at the mine and pumped to the plant. At the plant, the kaolin is wet classified, and shipped as a slurry or it is sometimes leached or bleached, then dewatered and dried in drum, apron, or spray type

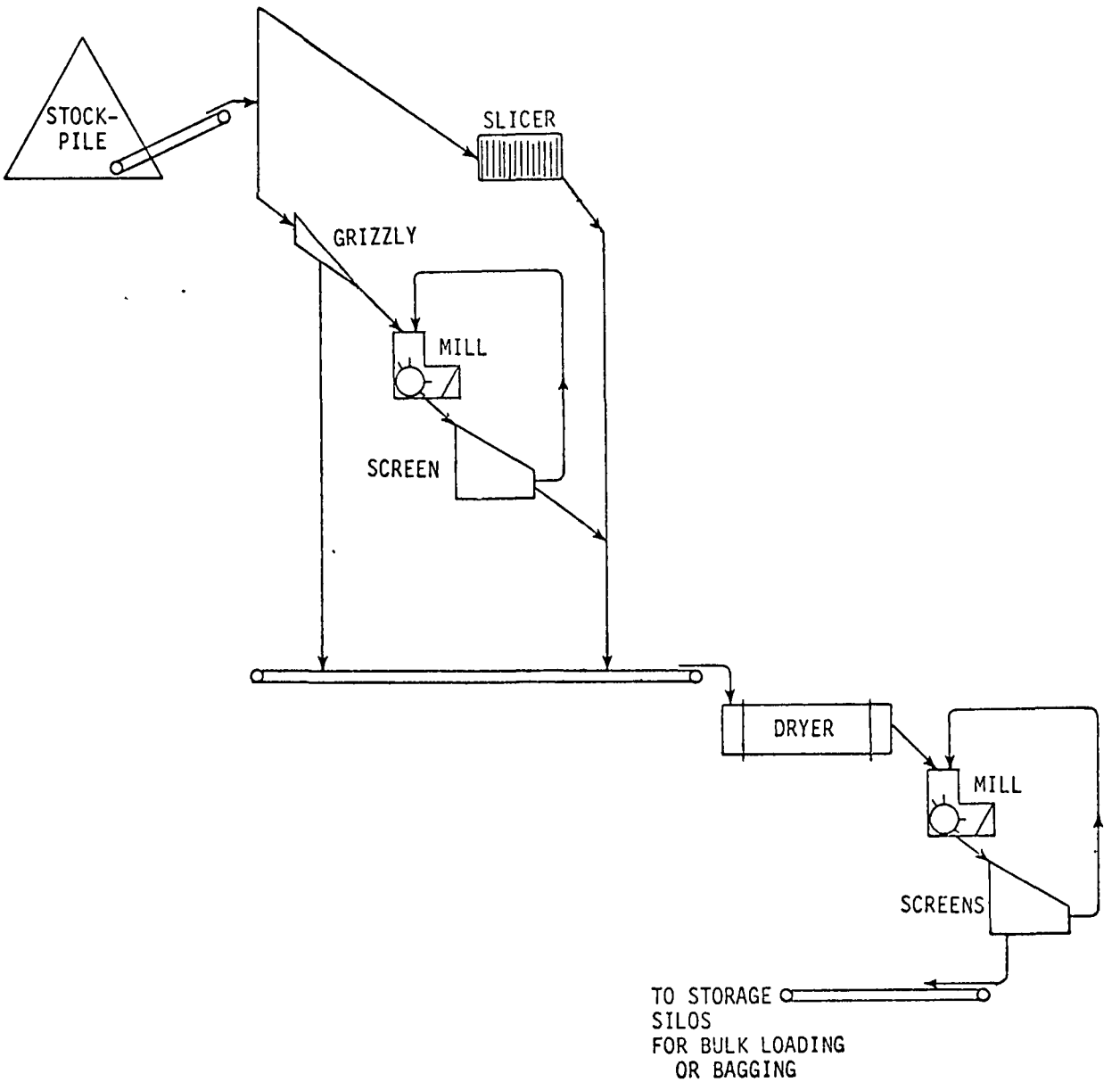

Figure 2-5. Bentonite and fuller's earth processing.

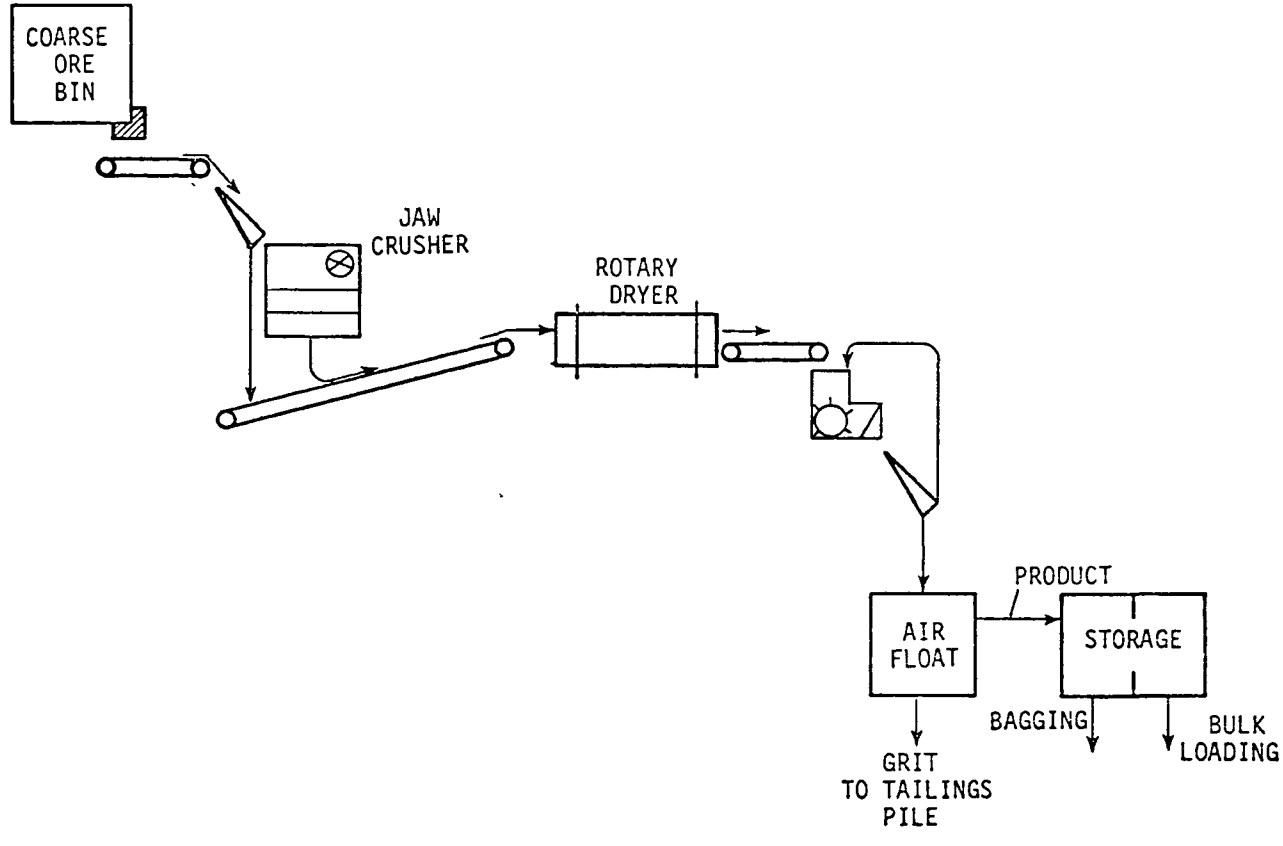

Figure 2-6. Kaolin processing.

dryers. Kaolin that is dried can be used as it exists or it can be pulverized (normally with a hammermill) to obtain a fine powder. The product is typically shipped in bulk loads.

2.1.3.3 Ball Clay - Ball clay is strip mined without blasting and trucked to the processing plant. The clay is processed by drying with a rotary dryer and milling with a hammermill. A few plants air-float part of their product. Most ball clay is bagged but some is shipped as a slurry. Figure 2-7 shows ball clay processing.

2.1.3.4 Fire Clay - Fire clay is mined both underground and by open-pit methods. A large amount of the higher quality clays are found very deep where the overlying rocks cannot be profitably stripped. Blasting is sometimes necessary. Fire clay is normally used close to the mine where it is dry crushed, screened, formed into bricks, and fired. Since many of the fire clays lack plasticity, kaolin or a more plastic fire clay is added to aid in forming and bonding the brick. Some of the harder fire clays may require primary and secondary crushing and milling before forming into bricks. The processing of fire clay is similar to that of common clay shown in Figure 2-8.

2.1.3.5 Common Clay and Shale - Common clay and shale are typically mined by open-pit methods. However, some shale

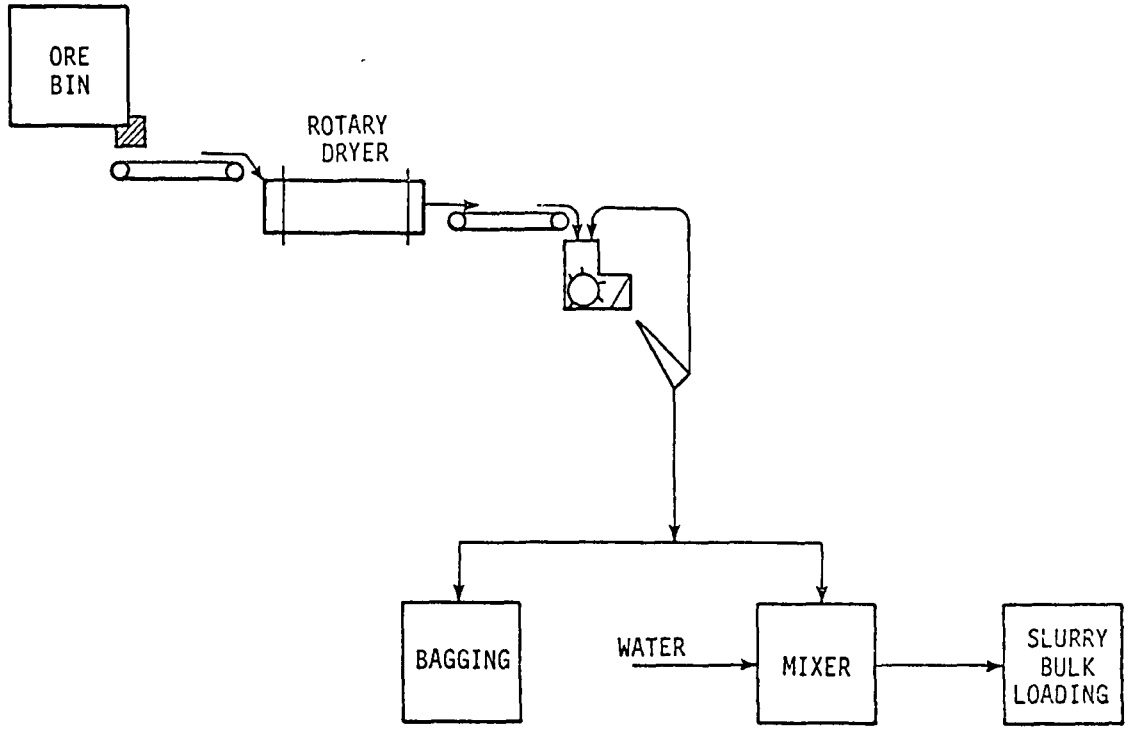

Figure 2-7. Ball clay processing.

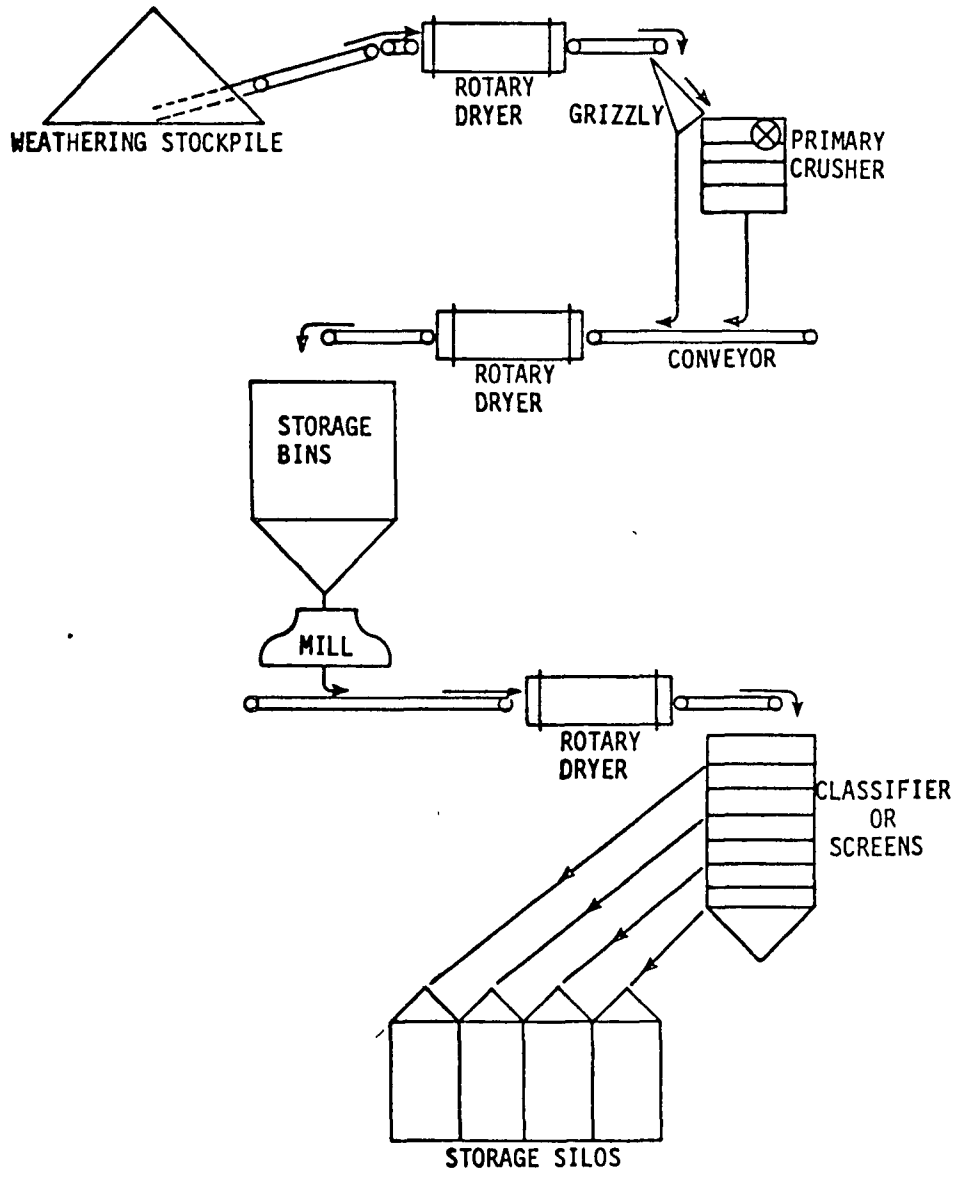

Figure 2-8. Common clay processing.

deposits are mined underground. Blasting is sometimes required to loosen hard deposits. Mining pits are normally close to processing plants because of the weight of the material and the low profit margin.

Crude clay may contain 35-40 percent water and it is dried in a drum dryer before primary crushing in jaw, gyratory, or cone crushers. Because crushing or grinding releases water trapped in the larger clay particles, a drying step follows each crushing or grinding operation. After primary and secondary crushing and screening, the clay is pulverized in a roll mill, hammermill, or attrition mill and again dried. From the dryer, the pulverized clay is sized by a rake or bowl type classifier and stored until it is used. Waste products are disposed of in tailings ponds. Figure 2-8 shows typical clay processing steps.

Shale is processed similarly to common clay. However, it does not have the high water content of many clays, so it does not require drying. Shale that is used as a lightweight aggregate is dried in large sheds or open stockpiles, then pyroprocessed in either rotary kilns or sintering machines. This step gives the shale the necessary structural properties to be used as a lightweight aggregate. Shale is crushed to the desired sizes using a jaw crusher followed by a gyratory or cone crusher. After crushing, the

product is screened into different grades with sizes ranging down from -1.9 cm (-3/4 inch). Shale processing is shown in Figure 2-9.

Common clays and shale are used for many applications such as construction materials, fillers, and coatings.

2.1.4 Diatomite

Diatomite is also known as diatomaceous earth or kieselguhr. It is found in deposits mainly as beds in siliceous marine or freshwater sediments. In the United States, recovery is done exclusively by quarrying or open pit mining. Diatomite is comparatively soft so blasting is not normally required and it can be removed with bulldozers. Crude diatomite can contain over 40 percent moisture and can sometimes be pumped to the processing facility.[2]

Diatomite is useful because of its unique shape and structure. Therefore, diatomite is milled with greater care than most minerals. Primary crushing to aggregate size is normally done by hammermill. The mineral is then pneumatically conveyed and sized using hot gases to dry the ore. Abrasive action between particles during conveying breaks-up the larger sizes. The ore is separated into different sizes as they are carried through a series of fans, cyclones, separators and a baghouse.[2] Some diatomite is air classified and used directly as "natural" milled products while

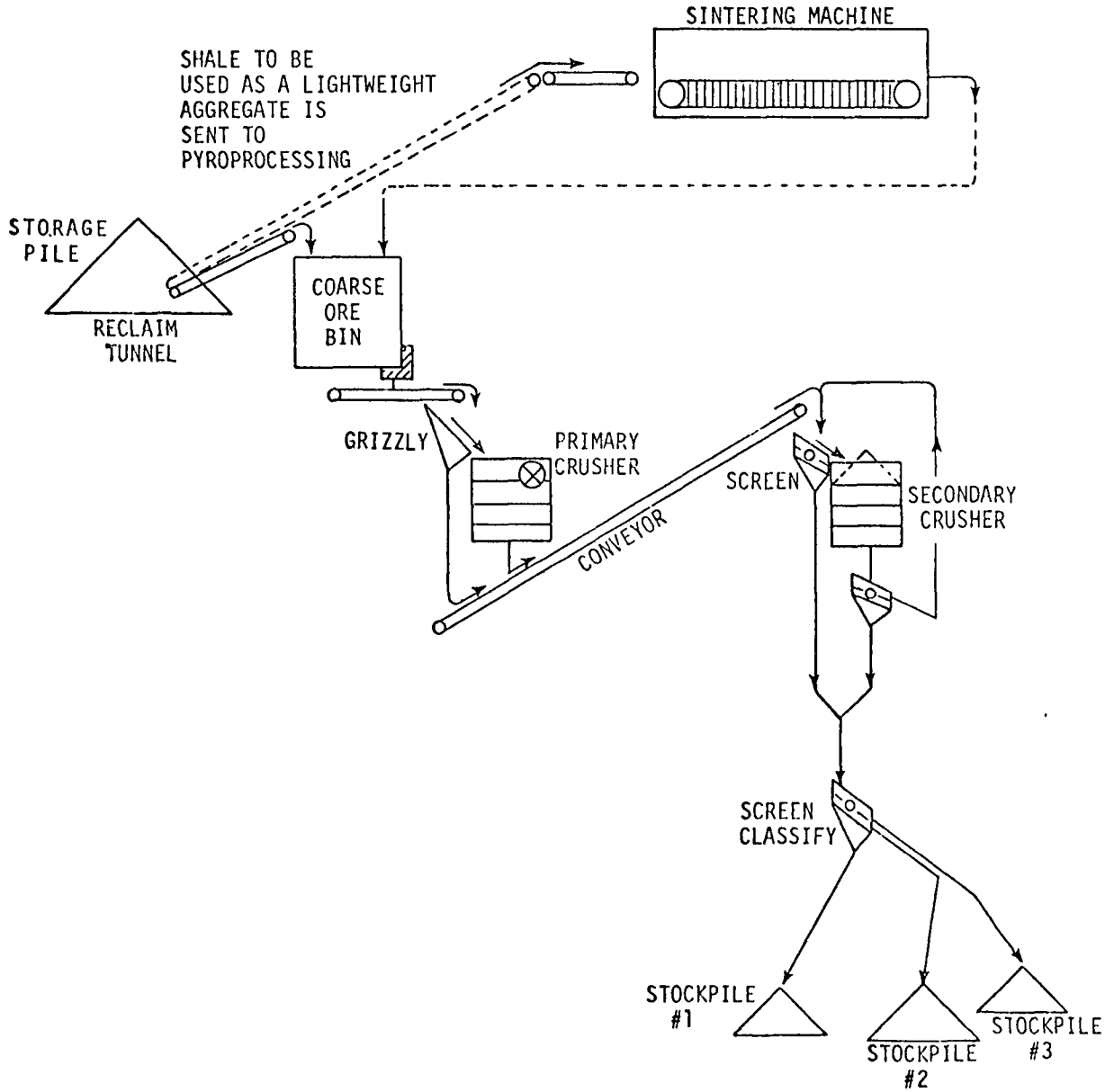

Figure 2-9. Shale processing.

the rest may be calcined in large rotary kilns with or without flux (usually soda ash) followed by more milling and classifying. Calcining fuses the diatomite powder so that further adjustment of particle size can be done, and also removes the combined water that is part of the diatomite structure. A diatomite process flow diagram is shown in Figure 2-10.

Diatomite is used as various sizes of powders. Applications include filter mediums and aids, insulation, absorbents, insecticide carrier, and abrasives.

2.1.5 Feldspar

Feldspar is found mostly in pegmatite formations as large crystals or in ore intermingled with quartz. Both forms are relatively free of iron-bearing impurities. Most feldspar ores are open pit mined and trucked to the mineral processing plant. Blasting is necessary to remove the ore, and at some mines additional breakup of the ore is done by drop-balling.

The mined minerals must be reduced to 0.841 or 0.55 mm (20 or 30 mesh) when the feldspar is concentrated by flotation.[2] This reduction is done by conventional primary and secondary crushing and screening followed by milling with a ball or rod mill. The feldspar is then separated from slime, micaceous minerals, iron-bearing minerals, and quartz

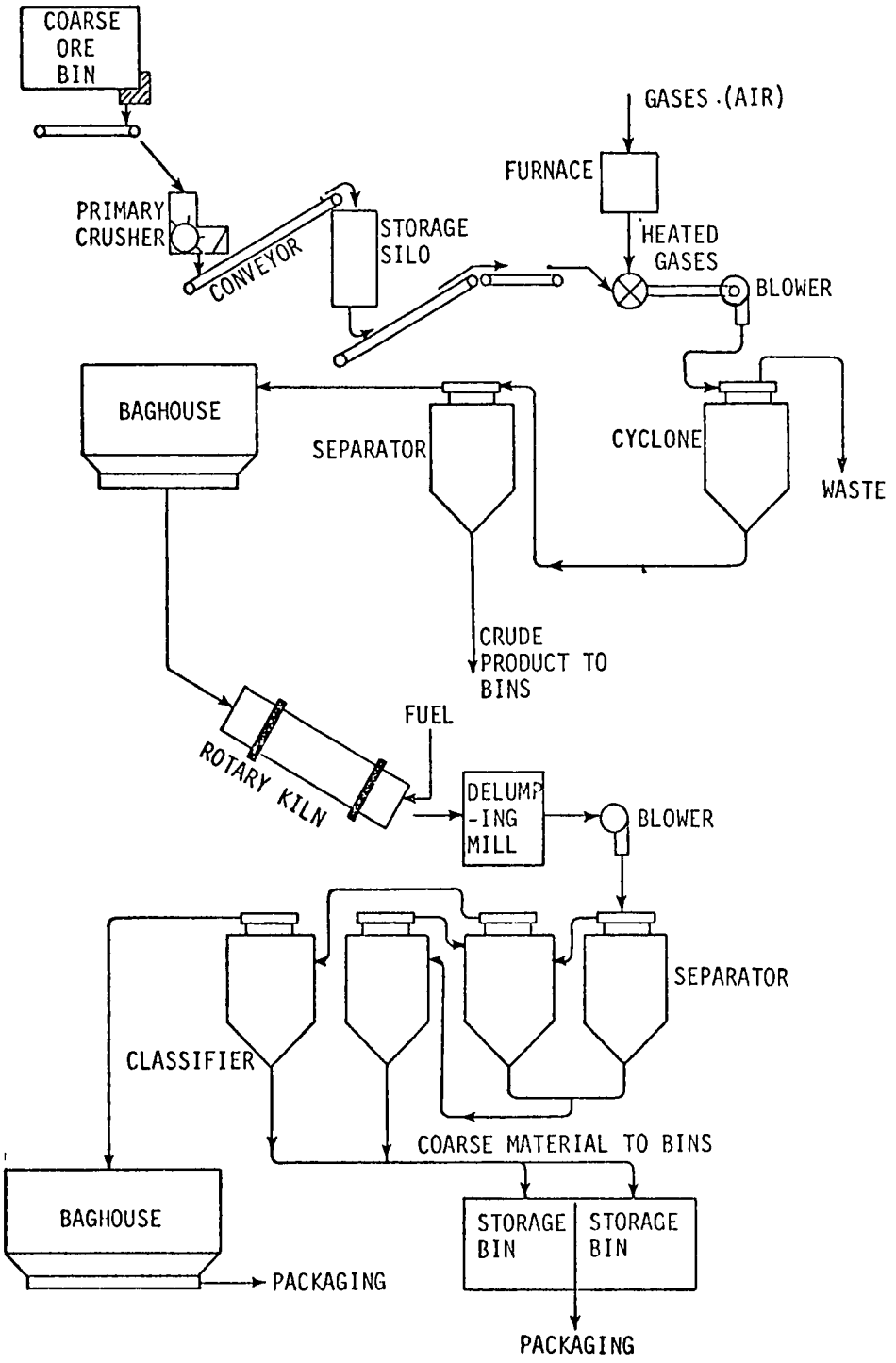

Figure 2-10. Diatomite processing.

by flotation. After dewatering, the feldspar concentrate is dried in rotary dryers followed by extra grinding and magnetic separation at some plants and then sent to storage. Two U.S. facilities use only dry processing for Feldspar.[3] The operations are similar to those for wet processing except that flotation is not used and air classification separates the material. Feldspar processing is shown in Figure 2-11. Rail and truck transportation is used to get the product to the consumer. Process wastes are disposed of in settling ponds and the dewatered waste is sent to tailings piles. Most feldspar is ground to 0.841 to 0.074 mm (20 to 200 mesh) for consumption. Feldspar is mainly used in glass and ceramics manufacturing but approximately 5 percent is used as a filler or an abrasive.

2.1.6 Gypsum

Gypsum ($CaSO_4 \cdot 2\ H_2O$) is found in deposits frequently in association with the anhydrous form of calcium sulfate ($CaSO_4$). It is typically imbedded with shale or limestone. Both open pit mines and room-and-pillar underground mines are used to recover this mineral. Drilling and blasting is necessary to recover gypsum. Quality control is an important factor in mining, since for economic reasons little or no beneficiation is performed during processing. Trucks and rail cars are used to haul the mineral to the mill.

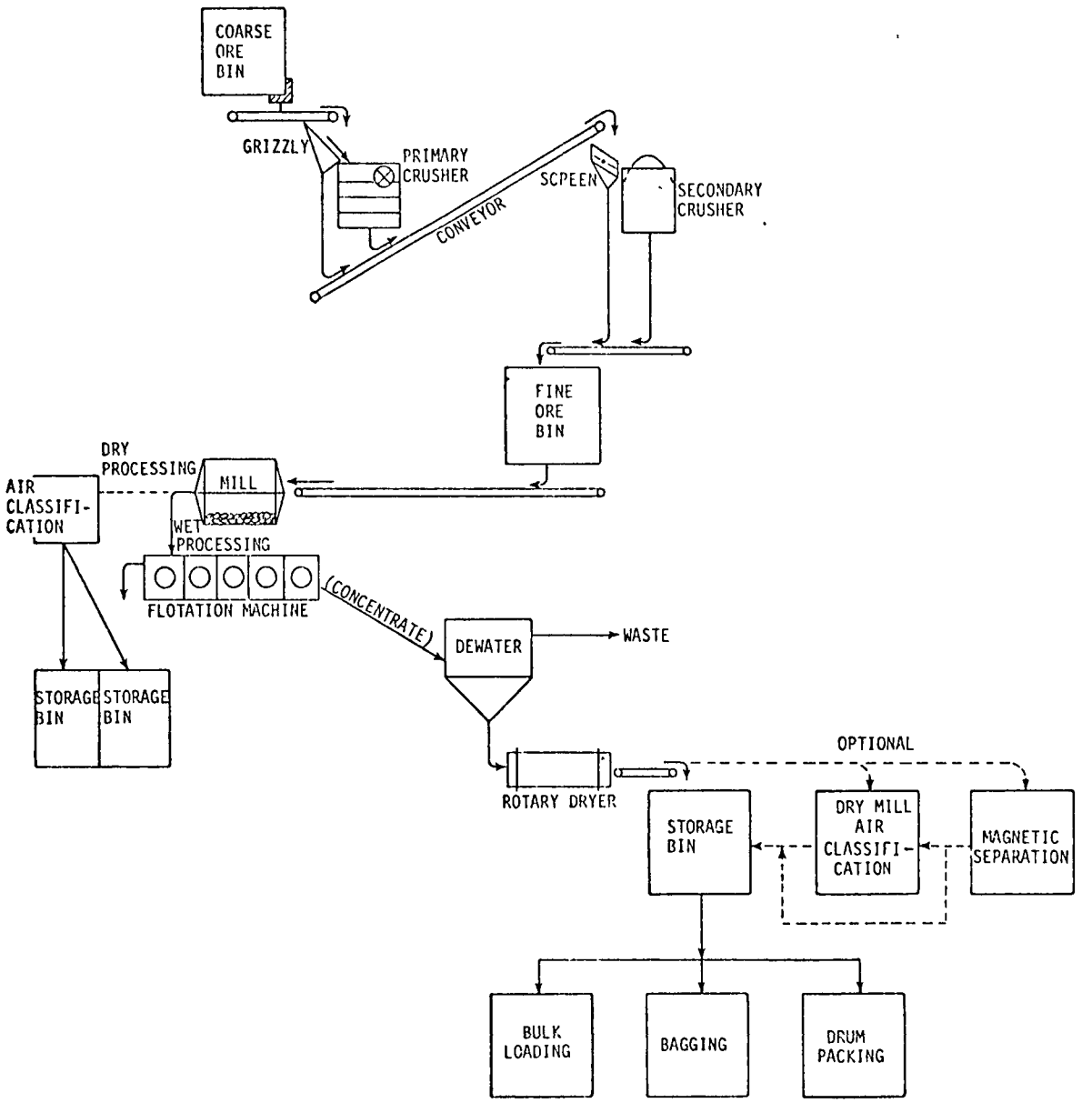

Figure 2-11. Feldspar processing.

Primary crushing of gypsum is often done at the mine. Gyratory crushers are used primarily but jaw or impact crushers are common. Secondary screening to avoid over-crushing and to recover Portland cement rock is followed by size reduction to -4.76 mm (-4 mesh) using cone-type crushers or hammermills. Drying the mineral to remove free moisture is sometimes done in the primary or secondary crushing stages and is almost always done before the final size reduction step. Rotary dryers are used most often and rock temperatures are kept below 49°C (120°F) to avoid dissociation of the combined water.[2] Drying is needed because when wet, -4.76 mm (-4 mesh) material from the secondary crusher is not free-flowing and is more difficult to handle. Fine grinding is accomplished with air swept roller mills. After milling, some gypsum is washed or wet screened when a white color is needed, but most of the mineral is sent directly to vertical kilns or kettles to be calcined (some processes calcine the gypsum before milling). Calcining removes most of the water of hydration to obtain plaster of paris ($CaSO_4 \cdot 1/2\ H_2O$) which accounts for over 90 percent of all calcium sulfate end products.[2] Gypsum processing is schematically shown in Figure 2-12.

Calcined gypsum is used in the manufacture of a variety of plasters for construction or industrial applications.

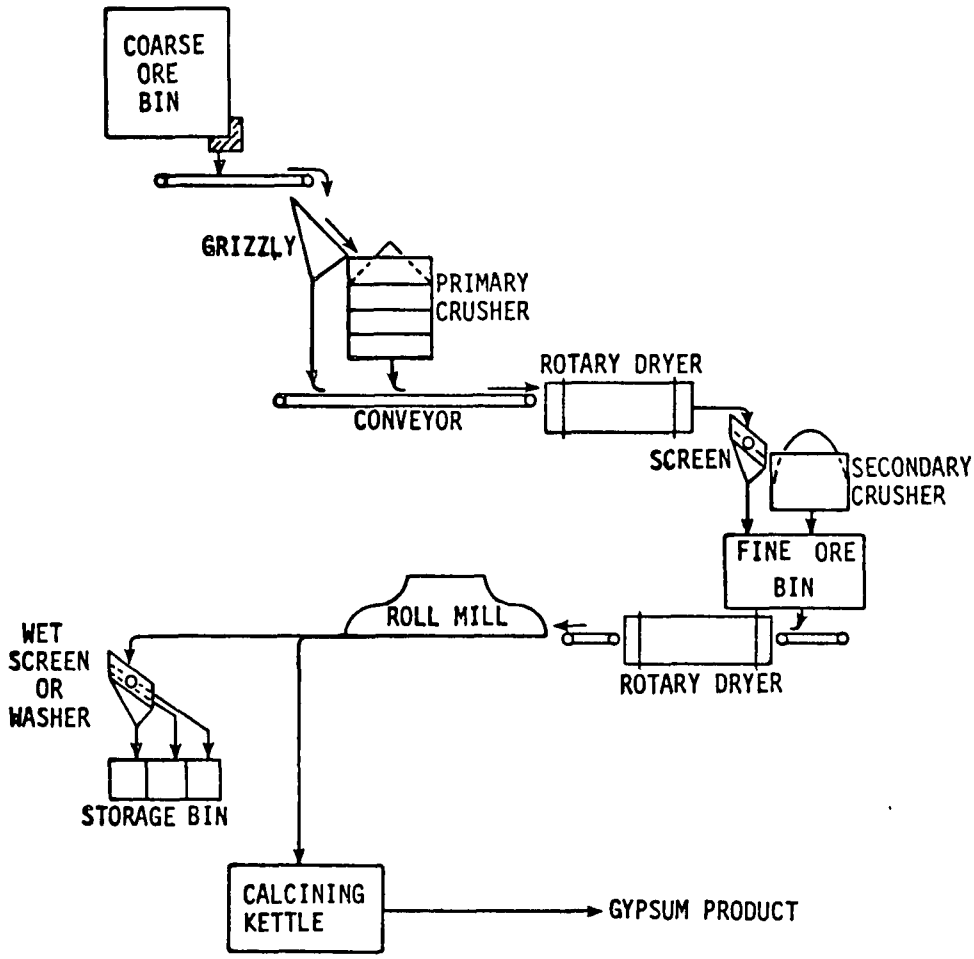

Figure 2-12. Gypsum processing.

About 30 percent of gypsum is not calcined.[2] This product is used as a portland cement retarder, as a mineral filler, and for other industrial applications. The remainder (70 percent) of the gypsum is calcined and used in plasters and wallboard and block for construction use.

2.1.7 Lightweight Aggregates

Lightweight aggregates include several minerals or rock materials that are used as fillers in concrete, as plaster aggregate, as insulating fill, and for other structural, filler or insulating purposes. Some occur naturally (pumice) while others are manufactured from natural minerals (shale, vermiculite, or perlite), or are by-products from other manufacturing processes (granulated slag). Expanded shale was discussed in Section 2.1.3.5 and pumice will be discussed in Section 2.1.8, while the processing steps for perlite, vermiculite, and slag are described in this section. Naturally occurring aggregates are typically mined by open pit methods and trucked to the processing plant. Slag is a by-product from iron and steel manufacturing.

2.1.7.1 Perlite - Perlite as received from the mine is reduced by a jaw crusher to -1.6 cm (-5/8 in.) size. If necessary, drying is done to reduce the water content from two to five percent to less than one percent. The dried perlite is screened and further crushed by a ball or rod

mill to the specified size for expansion furnaces typically located away from the mill and close to the perlite consumer. Care must be taken during the crushing steps to minimize excessively fine particles which have limited use and are generally considered waste. Air classification separates the -0.149 mm (-100 mesh) material (considered waste) from the useful sizes (-4.76 to +0.149 mm [-4 to +100 mesh] for concrete aggregate).[2] The perlite product is stored until trucked to perlite expansion furnaces while the waste (approximately 25 percent of the mill feed) is discarded by landfill. Perlite processing is shown in Figure 2-13.

2.1.7.2 Slag - Air-cooled, granulated, and expanded blast furnace slags are used as construction aggregates. Each differs in the way it is treated after the slag is removed from the blast furnace. To produce air-cooled slag, molten slag is poured into a pit and allowed to cool. Granulated slag results when hot slag is water quenched to quickly cool the slag before crystallization takes place. Expanded slag has a lightweight cellular structure that is produced by treating molten blast furnace slag with water, steam, and/or compressed air. When cool enough to handle, both air-cooled and expanded slag are typically removed from their pit by power equipment and then crushed and recrushed by jaw crushers to produce a useable product. Screens are used to

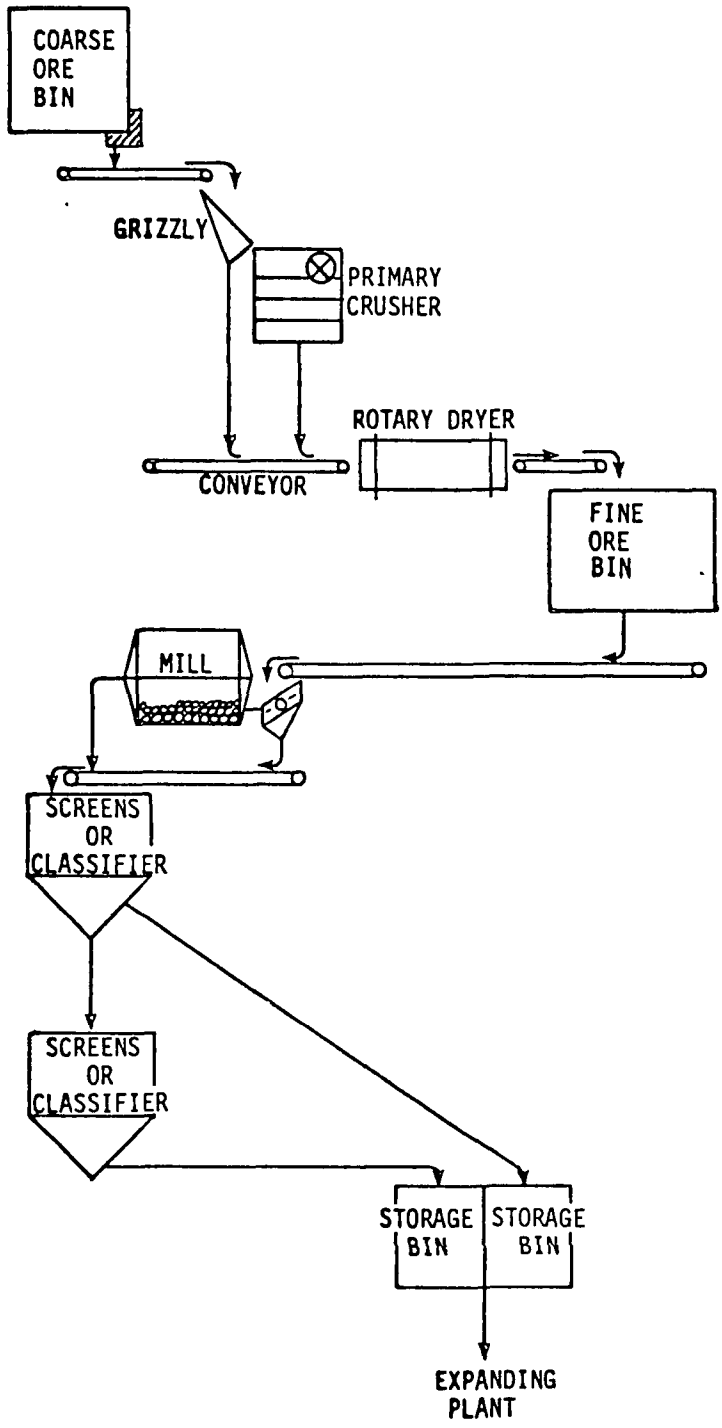

Figure 2-13. Perlite processing.

classify the crushed slag. Granulated slag is not normally processed by crushing and screening, but is used in the sizes produced by quenching. Slag processing is shown in Figure 2-14.

Granulated and expanded slags are processed hot resulting in an odor because of H_2S emissions. As with other mineral processing facilities, crushing and screening generate particulate emissions. When the hot slag is water quenched, a visible steam plume is generated.

2.1.7.3 Vermiculite - Vermiculite mining and processing techniques depend on the properties of the vermiculite deposits. One major vermiculite operation in the U.S. does not use any crushing since the mineral is found in a disseminated form. However, blasting is sometimes needed at the open-pit mine to loosen the ore. This Montana location separates the +1.6 cm (+5/8 inch) waste rock by screening before sending the remaining ore to blending beds. Another mine in South Carolina wet processes the mined ore to remove clay slimes and break up the lumps from the mine prior to milling. This plant must then grind the rock to the required sizes (less than 6.73 mm [3 mesh]). All operations require that the vermiculite be concentrated using jig or spiral units. The concentrate can then be wet screened into different size classifications and dried in a dryer, or dried

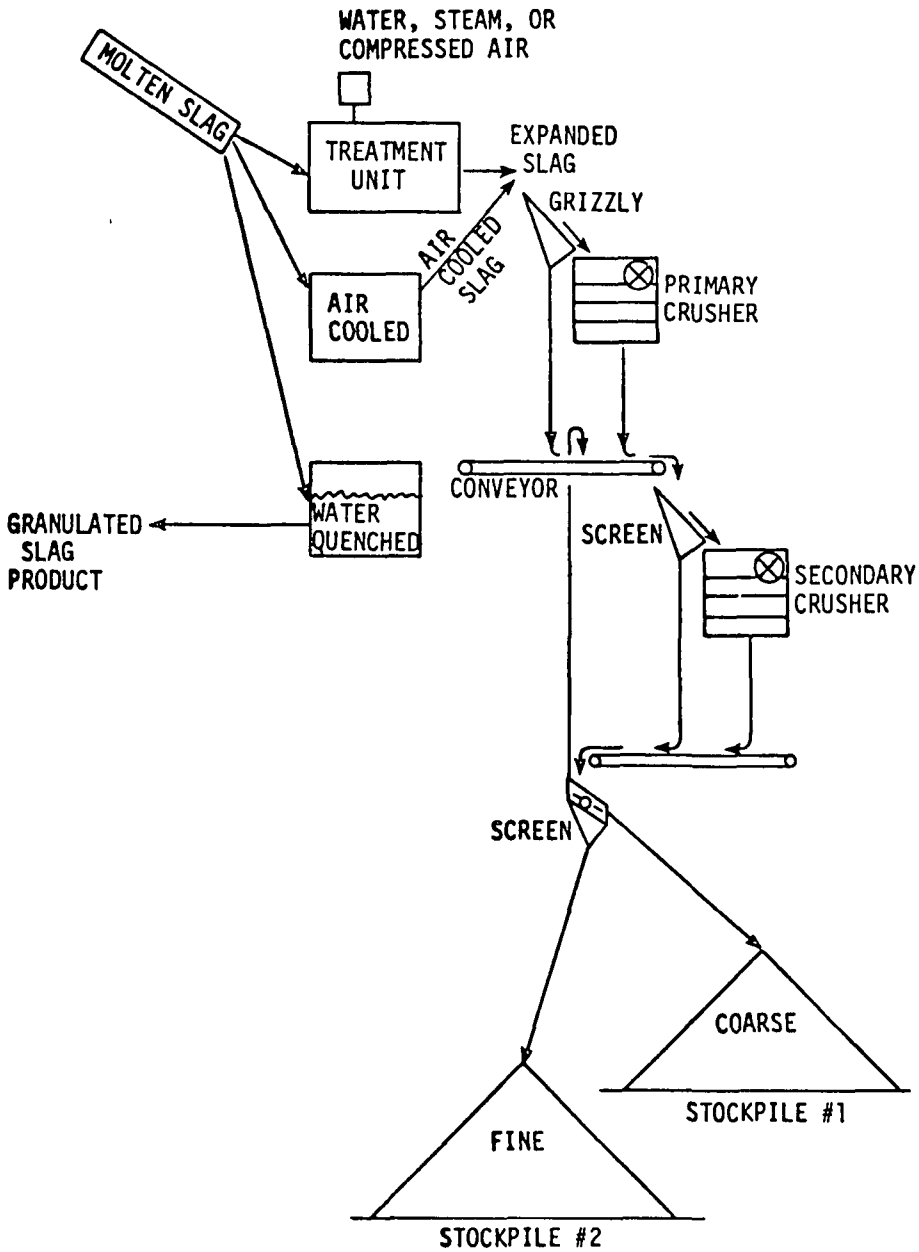

Figure 2-14. Slag processing.

and then screened. The unexpanded vermiculite is then stored until it is shipped to expansion furnaces at various locations across the U.S. This practice minimizes transportation expenses. Vermiculite processing is shown in Figure 2-15.

2.1.8 Pumice

Pumice can be classified as a lightweight aggregate but it is also used as an abrasive. It is a product of volcanic eruptions and is found in lava deposits in a highly cellular, glass state. The mineral is mined by the open pit method and is sometimes air dried before hauling it to a crushing and screening plant.

The pumice as received at the mill is processed by primary crushing and secondary screening and crushing. Sometimes only one crushing step is needed. If the material is to be used as road surfacing, the pumice can be removed at this point. However, pumice used as an abrasive must be ground further with a rod or ball mill. After grinding, the pumice is air classified and bagged according to size. A schematic of pumice processing is shown in Figure 2-16.

Most pumice is used in road construction and maintenance, as railroad ballast, and as a concrete admixture or aggregate. Less than ten percent is used as an abrasive. It is used in block form, in lumps, and as a powder.

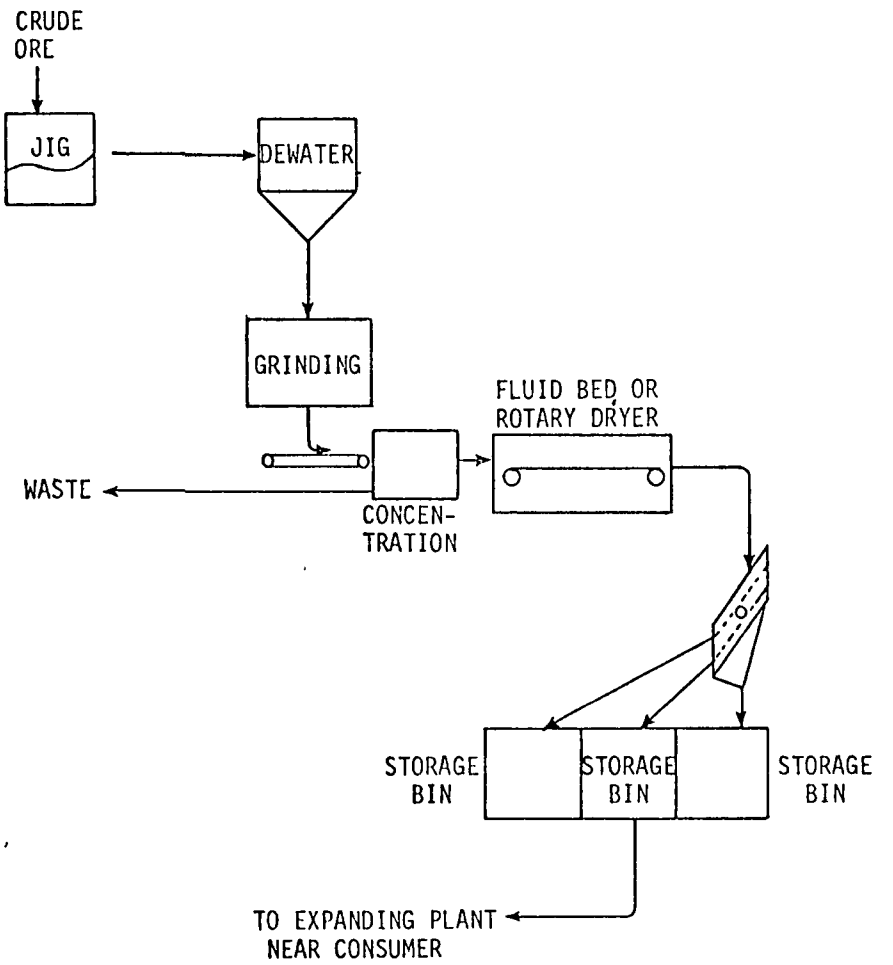

Figure 2-15. Vermiculite processing.

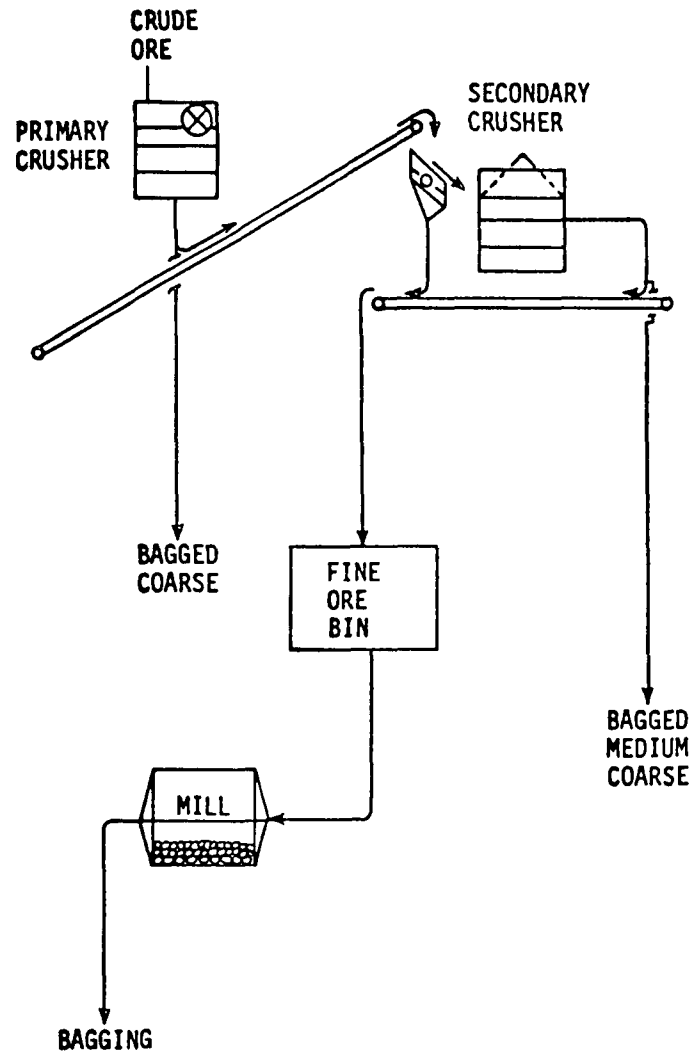

Figure 2-16. Pumice processing.

2.1.9 Sand and Gravel

Sand and gravel are found in many locations both above and below water. Sand is defined as rock or mineral particles retained on a 0.074 mm (200 mesh) sieve opening but passing through a 4.76 mm opening (4 mesh) sieve.[2] Gravel is defined as those particles larger than 4.76 mm (4 mesh) up to a 8.9 cm (3.5 inch) maximum size.[2] Locations of sand and gravel deposits must be close to where they are used because of the low-cost and high-volume nature of the sand and gravel industry. The nature of the deposit (wet or dry) dictates the above-ground mining method that is used. Power shovels, draglines, dredges, and bulldozers have been used. Blasting is not required. Processing equipment is located near the mine so conveyors and trucks are used to get the sand and gravel to the process plant.

Many sand and gravel plants use both dry and wet processing. Dry processing is used when the sand and gravel are used as road base, bituminous aggregate (blacktop), or other purposes that require a sized pit run material. The dry process is essentially identical to the wet process discussed below except that the washing steps are not needed to produce a useable product.

The wet process is used to produce the washed and screened sand and gravel necessary for use as a concrete

aggregate. The pit run sand and gravel are normally washed in a log washer or rotary scrubber and screened with vibratory screens. This step removes unwanted soil. The larger gravel (7.6 cm [+3 in.]) is crushed in a jaw crusher. Secondary screening and crushing with gyratory or roll crushers are used to reduce the gravel to -2.5 cm and -1.9 cm (-1 in. and -3/4 inch).[2] If the sand does not have sufficient fines, some gravel may be further reduced to about 6.4 mm to 9.5 mm (1/4 inch to 3/8 inch) size by ball or rod mills to supplement the sand.[2] The sand portion of the mineral is usually washed and classified in spiral classifiers or hydraulic settling tank spiral classifier combinations. If necessary, soft particles such as shale and light particles can be separated by a sink float technique or a jig. Waste products go to landfills or have other low priority uses. Sand and gravel processing is shown schematically in Figure 2-17.

The sized sand and gravel is blended as required for use in building construction and concrete and bituminous paving. The size range goes from 3.2 mm to 38 mm (1/8 inch to 1.5 inches). Small amounts of sand are used in the specialized glass industry. Sand is also used for foundry molds, abrasives, and as a filter medium.

2.1.10 Talc and Soapstone

Talc and soapstone are found in deposits as foliated,

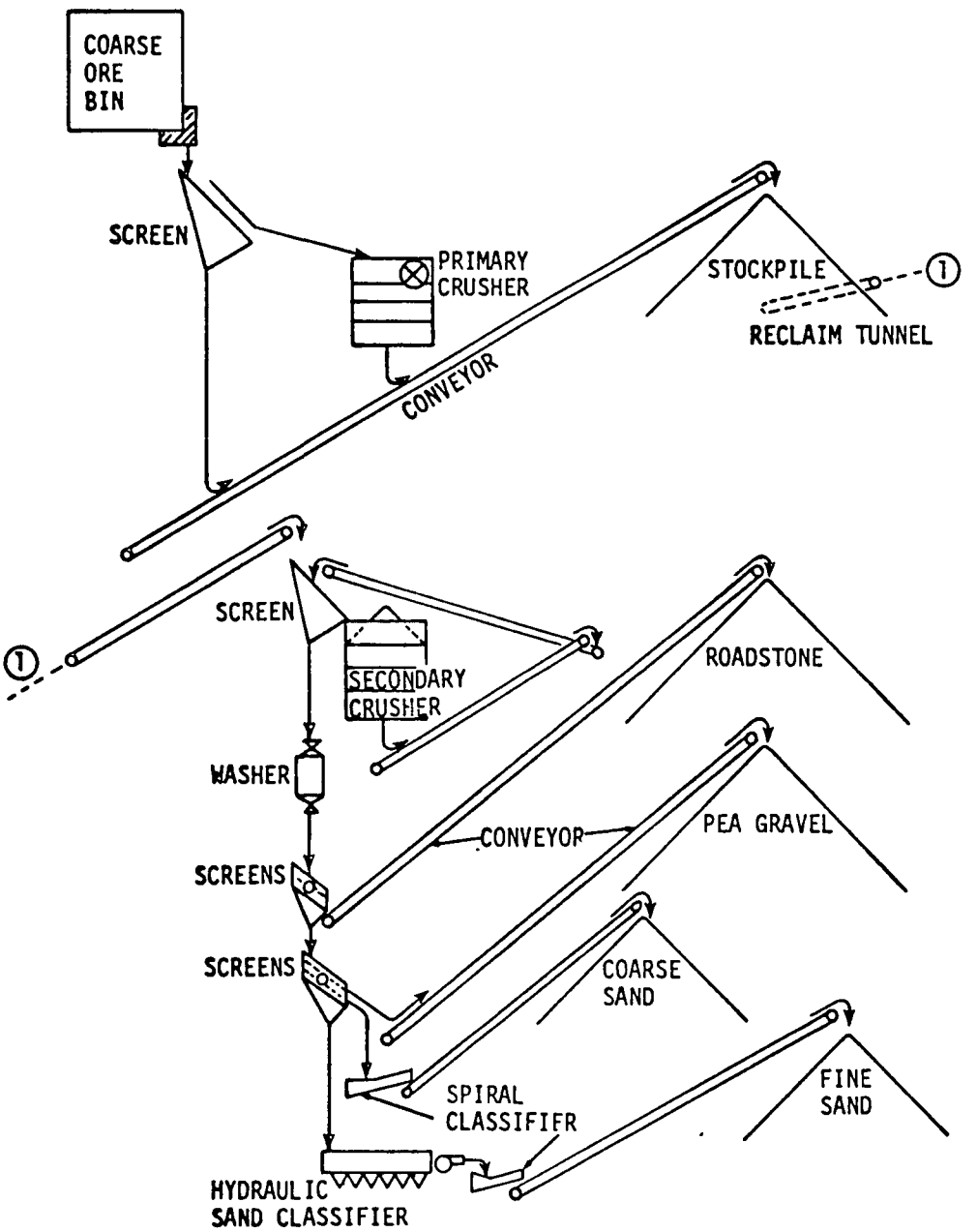

Figure 2-17. Sand and gravel processing.

granular, or fibrous masses. The minerals are mined by both open-pit and underground methods. The quality of the mining step is important in that talc or soapstone is often sold on the basis of a white color and the absence of abrasives. The extent of drilling and blasting is dependent upon the type of talc ore being mined. The crude ore is transported to the mill by truck or rail.

The crude ore is crushed by a jaw crusher followed by a gyratory crusher. If necessary, the talc or soapstone from the gyratory crusher is dried by a rotary dryer prior to being milled by a ball mill or roller mill. Ceramic balls are normally used in ball mills to preserve the natural color of the minerals. Air classification is used to separate the different particle sizes. Newer plants use additional wet processing, such as froth flotation, to better purify the minerals, or use sophisticated grinding techniques to meet market demands (some products require sizes less than one micron). Figure 2-18 is a schematic diagram for talc processing.

Useful sizes range from less than one micron to 98 percent less than 0.074 mm (200 mesh). Some crude crushed talc (-0.074 mm to +0.420 mm[-200 mesh to +35 mesh]) may be used as a roofing filler or surfacing material. These minerals are used in the manufacture of ceramics, paint, asphalt roof coatings and insecticides.

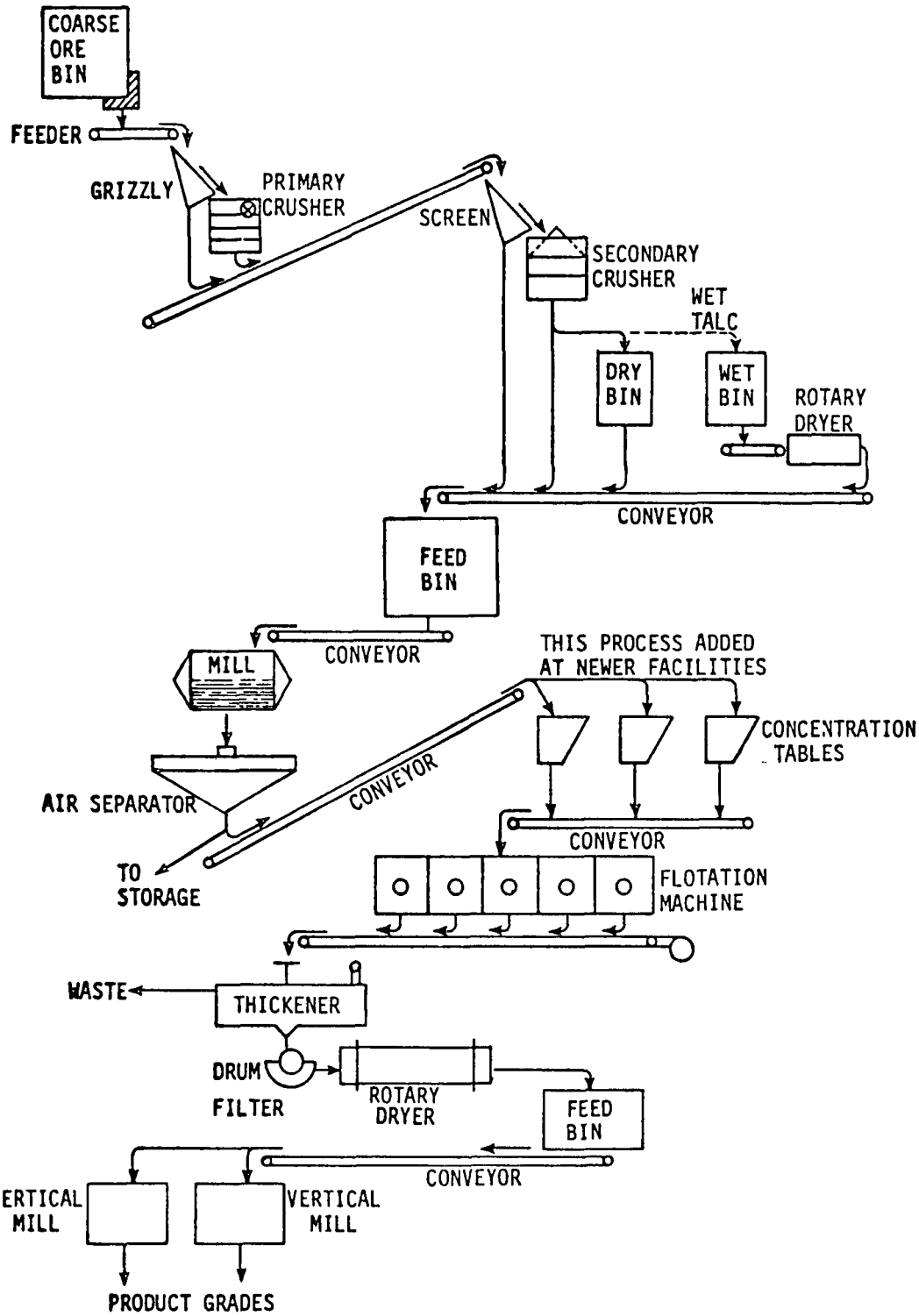

Figure 2-18. Talc processing.

2.2 MINING OPERATIONS AND CRUSHING PLANT PROCESS FACILITIES

Mining operations are drilling, blasting, secondary breakage, loading, and hauling of the broken minerals to the processing plant. Principal processing plant facilities include crushers, screens, and material handling and transfer equipment.

2.2.1 Mining

Most minerals require drilling and blasting to loosen portions of the deposit so that it can be removed. Some mineral deposits are capable of being removed by power equipment such as front-end loaders, drag lines, and dredges. Drilling, blasting, and loading are the major emission-causing operations.

Drilling consists of boring holes into the bedded minerals to provide blastholes which are subsequently charged with explosives and detonated. Tractor or truck mounted pneumatic rotary or percussion drills are commonly used. In rotary drilling, the drill rotates a drill rod to which a bit, usually a roller cone type, is attached. The borehole is produced by the abrasive cutting action of the rotating bit. Percussion drills use compressed air to drive a piston which transmits a series of impacts or hammer blows either through the drill rod or, as in "down-the-hole" drilling, directly to the bit. The borehole is formed by

the chipping and pulverizing action of the chisel-like bit impacting against the mineral surface. Normally, rotary drills are used in softer mineral deposits and percussion drills used for harder deposits. The number, depth, spacing and diameter of blastholes depend on the characterisitics of the explosive used, the type of burden or mineral to be fragmented, and characteristics of the deposit such as the location of dips, joints, and seams.

Blasting is used to displace minerals from their deposits and to fragment them into sizes which require a minimum of secondary breakage and which can be readily handled by loading and hauling equipment. Once engineered, blasting practices simply consist of loading blastholes with a predetermined amount of explosives and stemming, and then detonating them. Explosives most commonly used in the industry include dynamites and blasting agents. Dynamites are highly explosive and come in a variety of types and grades, many of which contain nitroglycerine. Blasting agents are insensitive chemical mixtures of fuels and oxidizers. Mixtures of ammonium nitrate and fuel oil (ANFO) are the most common types and consist of coated or uncoated fertilizer grade ammonium nitrate pellets, prills or granules mixed with four to six percent fuel oil.

The frequency of blasting may range from several shots per day to one per week depending on the plant capacity and the size of individual shots. The effectiveness of a shot is dependent on the characteristics of the explosive and the mineral.

If secondary breakage is required, drop-ball cranes are usually employed. Normally, a pear-shaped or spherical drop-ball, weighing several tons, is suspended by a crane and dropped on the oversize mineral as many times as needed to break it. Jaw crushers are sometimes at the mine site for primary crushing.

The excavation and loading of broken minerals is normally performed by shovels and front-end loaders. At most mines, large 18 to 68 metric ton (20 to 75 ton) capacity "off-the-road" haulage vehicles are used to transport minerals from the mine to the primary crusher over unpaved haul roads. This vehicle traffic on unpaved roads is responsible for a large portion of the fugitive dust generated by mining operations.

2.2.2 Crushers and Grinders

Crushers are used for coarse reduction of large quantities of minerals from run-of-mine sizes down to approximately 6.4 mm (1/4 inch) in size. This reduction may require one or more crushing steps. Grinders normally accept

feed from a crusher and are typically used to reduce this feed from about 6.4 mm (1/4 inch) down to 0.841 to 0.074 mm (20 to 200 mesh). Ultrafine grinders such as fluid energy mills can reduce minerals down to 1 to 50 microns. Some minerals such as kaolin or vermiculite may not require crushing and can be reduced to the desired size by grinding only.

During crushing and grinding, sufficient mechanical stress is applied to a rock particle to strain it beyond its breaking point. The mechanical stress may be applied by either compression or impact. These differ in the duration of time needed to apply the breaking force. In impacting, the breaking force is applied almost instantaneously, while in compression, the rock particle is slowly squeezed and forced to fracture. All crushers and grinders use both compression and impaction to various degrees. Table 2-1 ranks crushers and grinders according to the predominant mechanism used (from top to bottom, compression to impaction). Crushers generally use compression to a greater extent then grinders. In all cases, there is some reduction by attrition, the rubbing of stone on stone or metal surfaces.

Table 2-1. RELATIVE CRUSHING MECHANISM UTILIZED BY VARIOUS CRUSHERS AND GRINDERS

Compression	Double roll crusher
	Jaw crusher
	Gyratory crusher
	Single roll crusher
	Rod mill (low speed)
	Ball mill
	Rod mill (high speed)
	Hammermill (low speed)
	Impact breaker
Impact	Hammermill (high speed)

The size of the product from compression type crushers is controlled by the crusher setting at the bottom of the crushing chamber, that is the space between the crushing surfaces compressing the stone particle. This results in a relatively closely graded product with a small proportion of fines. Crushers and grinders that reduce by impact, on the other hand, produce a wide range of sizes and a high proportion of fines.

Since the size reduction achievable by one machine is limited, reduction in stages is required. As noted previously, the various stages include primary, secondary and

tertiary crushing or grinding. Basically, four types of crushers are used in the industry: jaw, gyratory, and roll crushers. Typical grinders in common use are impact grinders, tumbling mills (ball and rod mills), and fluid energy mills.

2.2.2.1 Jaw Crushers - Jaw crushers consist of a vertical fixed jaw and a moving inclined jaw which is operated by a single or pair of toggles. Rock is crushed by compression as a result of the opening and closing action of the movable jaw against the fixed jaw. Their principal application in the industry is for primary crushing.

The most commonly used jaw crusher is the Blake or double-toggle type. As illustrated in Figure 2-19, an eccentric shaft drives a Pitman arm that raises and lowers a pair of toggle plates to open and close the moving jaw which is suspended from a fixed shaft. In a single-toggle jaw crusher, the moving jaw is itself suspended from an eccentric shaft and the lower part of the jaw supported by a rolling toggle plate (Figure 2-20). Rotation of the eccentric shaft produces a circular motion at the upper end of the jaw and an elliptical motion at the lower end. Other types, such as the Dodge and overhead eccentric are used on a limited scale.

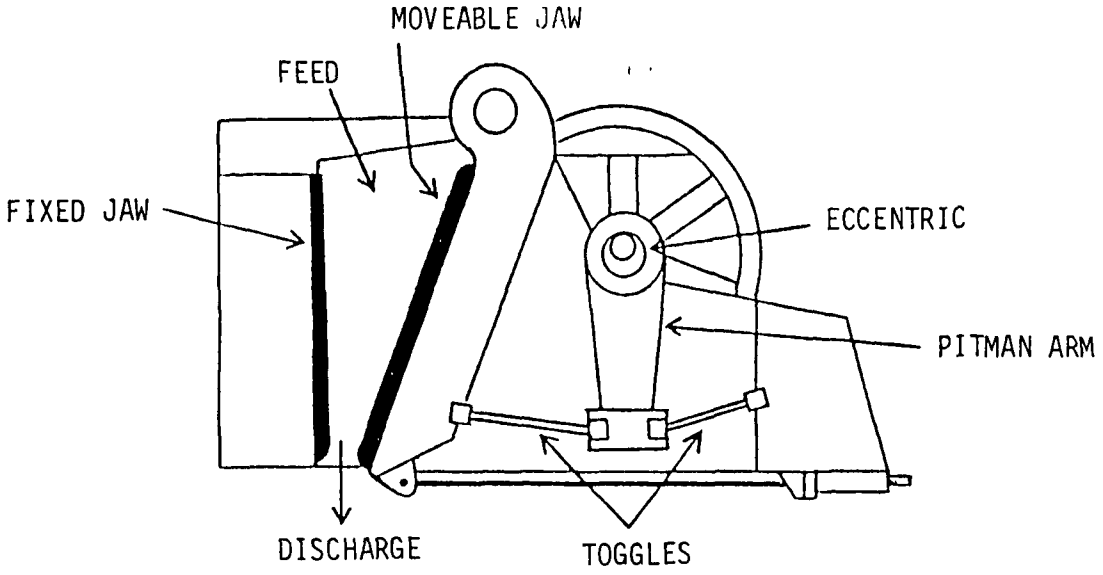

Figure 2-19. Double-toggle jaw crusher.[4]

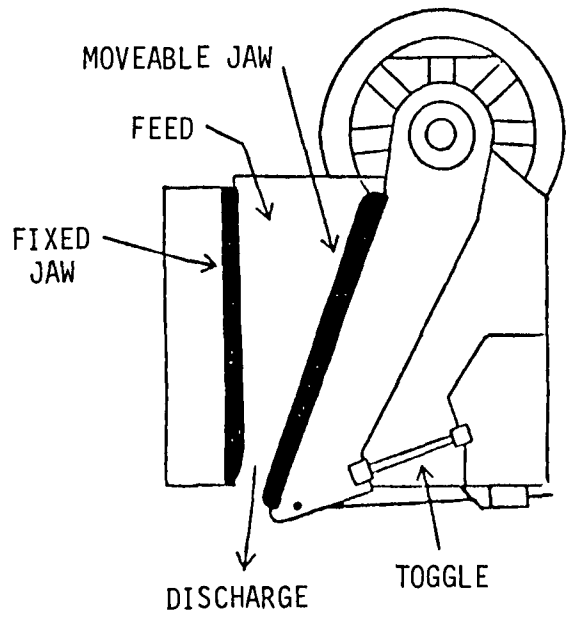

Figure 2-20. Single toggle jaw crusher.[4]

The size of a jaw crusher is defined by its feed opening dimensions and may range from about 15 x 30 cm (6 x 12 inches) to 2.1 x 1.7 meters (84 x 66 inches). The size reduction obtainable may range from 3:1 to 10:1 depending on the nature of the rock. Capacities are quite variable depending on the unit and its discharge setting. Table 2-2 presents approximate capacities for a number of jaw crusher sizes at both minimum and maximum discharge setting.

2.2.2.2 Gyratory Crushers - Simply, a gyratory crusher may be considered to be a jaw crusher with circular jaws between which the material flows and is crushed. As indicated in Table 2-3, however, a gyratory crusher has a much greater capacity than a jaw crusher with an equivalent feed opening.

There are basically three types of gyratory crushers, the pivoted spindle, fixed spindle, and cone. The fixed and pivoted spindle gyratories are used for primary and secondary crushing, and cone crushers for secondary and tertiary crushing. The larger gyratories are sized according to feed opening and the smaller units by cone diameter.

The pivoted spindle gyratory (Figure 2-21) has the crushing head mounted on a shaft that is suspended from above and free to pivot. The bottom of the shaft is seated in an eccentric sleeve which revolves, thus causing the crusher head to gyrate in a circular path within a sta-

Table 2-2. APPROXIMATE CAPACITIES OF JAW CRUSHERS[5]
(discharge opening - closed)

Size meters (in.)	Smallest discharge opening cm	(in.)	Capacity* MT/hr	(ton/hr)	Largest discharge opening cm	(in.)	Capacity MT/hr	(ton/hr)
0.91x0.61 (36 x 24)	7.6	(3)	68	(75)	15	(6)	145	(160)
1.1x1.5 (42 x 60)	10	(4)	118	(130)	20	(8)	181	(200)
1.2x1.1 (48 x 42)	13	(5)	159	(175)	20	(8)	249	(275)
1.5x1.2 (60 x 48)	13	(5)	218	(240)	23	(9)	408	(450)
2.1x1.7 (84 x 66)	20	(8)	363	(400)	30	(12)	544	(600)

* Based on rock weighing 1600 kg/m^3 (100 lb/cu ft).

Table 2-3. APPROXIMATE CAPACITIES OF GYRATORY CRUSHERS[5]
(dishcharge opening - open)

Size meters (in.)	Smallest discharge opening cm	(in.)	Capacity* MT/hr	(ton/hr)	Largest discharge opening cm	(in.)	Capacity MT/hr	(ton/hr)
0.76 (30)	10	(4)	180	(200)	17	(6 1/2)	410	(450)
0.91 (36)	11	(4 1/2)	340	(370)	18	(7)	540	(600)
1.1 (42)	13	(5)	380	(420)	19	(7 1/2)	640	(700)
1.2 (48)	14	(5 1/2)	680	(750)	23	(9)	1,100	(1,200)
1.4 (54)	16	(6 1/4)	820	(900)	24	(9 1/2)	1,500	(1,600)
1.5 (60)	18	(7)	1,100	(1,200)	25	(10)	1,800	(2,000)
1.8 (72)	23	(9)	1,800	(2,000)	30	(12)	2,700	(3,000)

* Based on rock weighing 1600 kg/m^3 (100 lb/cu ft).

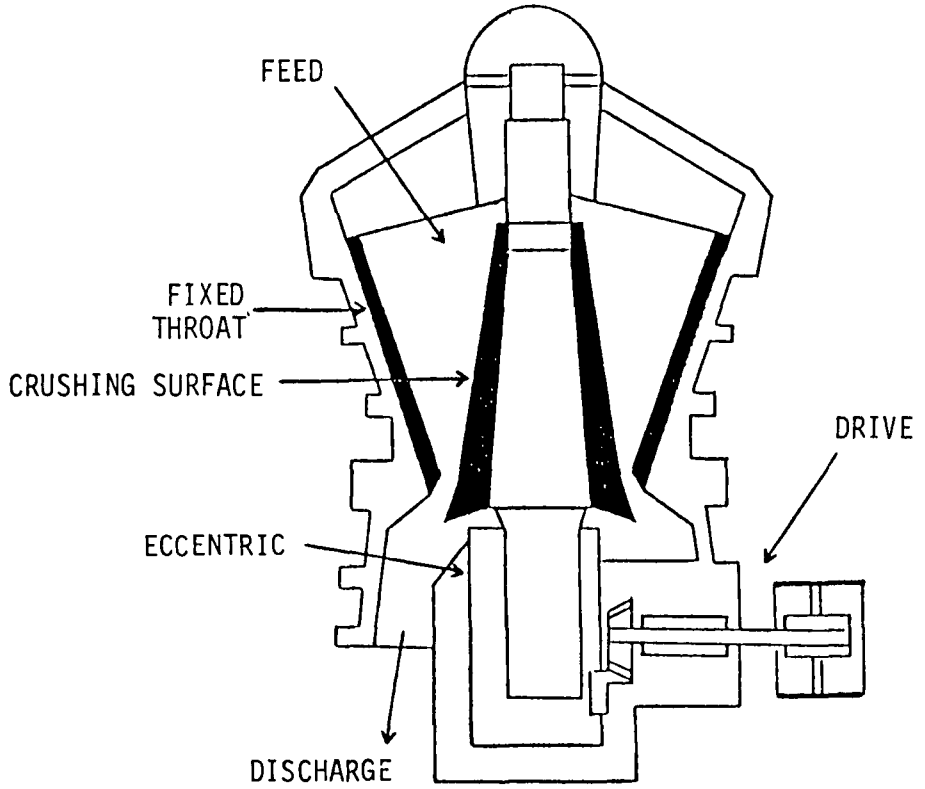

Figure 2-21. The pivoted spindle gyratory.[4]

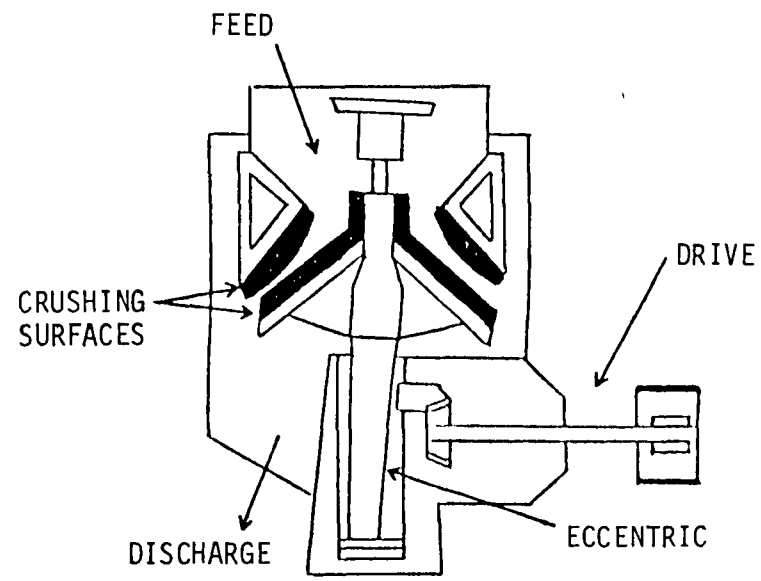

Figure 2-22. Cone crusher.[4]

tionary concave circular chamber. The crushing action is similar to that of a jaw crusher in that the crusher element reciprocates to and from a fixed crushing plate. Because some part of the crusher head is working at all times, the discharge from the gyratory is continuous rather than intermittent as in a jaw crusher. The crusher setting is determined by the wide-side opening at the discharge end and is adjusted by raising or lowering the crusher head.

Unlike the pivoted spindle gyratory, the fixed spindle gyratory has its crushing head mounted on an eccentric sleeve fitted over a fixed shaft. This produces a uniform crushing stroke from the top to the bottom of the crushing chamber.

For fine crushing, the gyratory is equipped with flatter heads and converted to a cone crusher (Figure 2-22). Commonly, in the lower section a parallel zone exists. This results in a larger discharge to feed area ratio which makes it extremely suitable for fine crushing at high capacity. Also, unlike regular gyratories, the cone crusher sizes at the closed side setting and not the open side setting. This assures that the material discharge will have been crushed at least once at the close side setting. Cone crushers yield a cubical product and a high percentage of fines due to interparticle crushing (attrition). They are the most

commonly used crusher in the industry for secondary and tertiary reduction. Table 2-4 presents performance data for typical cone crushers.

Table 2-4. PERFORMANCE DATA FOR CONE CRUSHERS[6]

Size of crusher meters (ft.)	Capacity, metric tons/hr (tons/hr) discharge setting, 0.95 cm (3/8 in)	1.3 cm (1/2 in)	1.9 cm (3/4 in)	2.5 cm (1 in)	3.8 cm (1 1/2 in)
0.61 (2)	18 (20)	23 (25)	32 (35)		
0.91 (3)	32 (35)	36 (40)	64 (70)		
1.2 (4)	54 (60)	73 (80)	110 (120)	140 (150)	
1.7 (5.5)			180 (200)	250 (275)	310 (340)
2.1 (7)			300 (330)	410 (450)	540 (600)

2.2.2.3 Roll Crushers - These machines are utilized primarily at intermediate or final reduction stages and are often used at portable plants. There are essentially two types, the single-roll and the double-roll. As illustrated in Figure 2-23, the double-roll crusher consists of two heavy parallel rolls which are turned toward each other at the same speed. Roll speeds range from 50 to 300 rpm. Usually, one roll is fixed and the other set by springs. Typically, roll diameters range from 0.61 to 2.0 meters (24 to 78 inches) and have narrow face widths, about half the roll diameter. Rock particles are caught between the

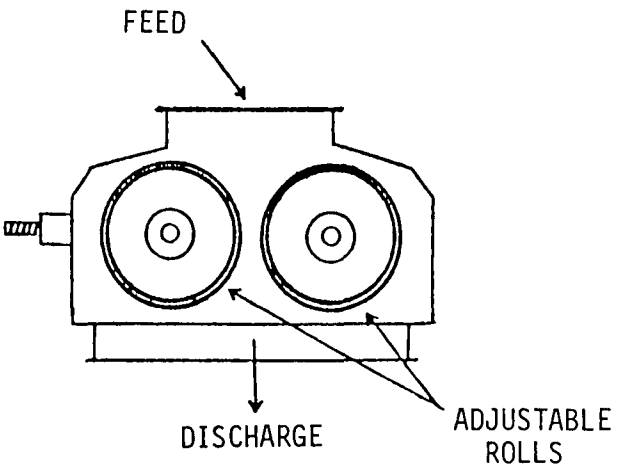

Figure 2-23. Double-roll crusher.[4]

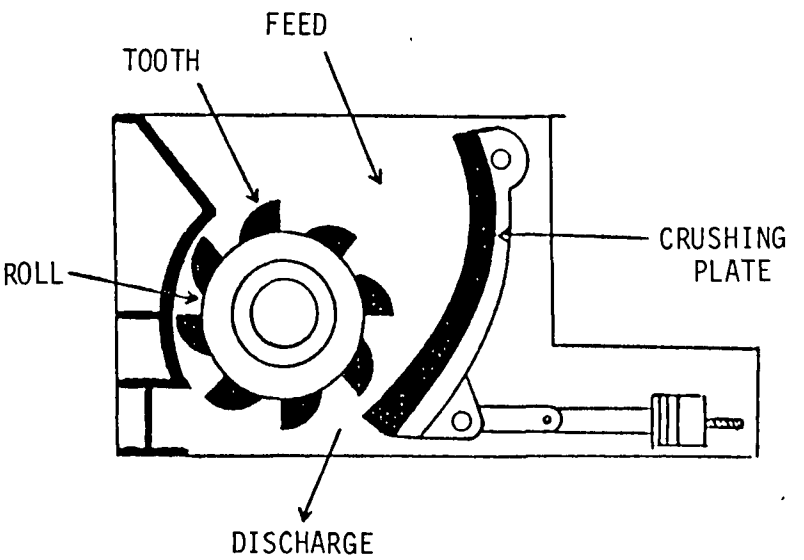

Figure 2-24. Single-roll crusher.[4]

rolls and crushed almost totally by compression. Reduction ratios are limited and range from 3 or 4 to 1. These units produce few fines and no oversize. They are used especially for reducing hard stone to a final product ranging from 6.4 mm to 0.84 mm (1/4 inch to 20 mesh).

The working elements of a single-roll crusher include a toothed or knobbed roll and a curved crushing plate which may be corrugated or smooth. The crushing plate is generally hinged at the top and its setting is held by a spring at the bottom. A toothed-roll crusher is depicted in Figure 2-24. The feed, caught between the roll and crushing plate is broken by a combination of compression, impact and shear. These units may accept feed sizes up to 51 cm (20 inches) and have capacities up to 450 metric tons/hr (500 ton/hr). In contrast with the double-roll, the single-roll crusher is principally used for reducing soft materials such as limestones.

2.2.2.4 Impact Grinders - Impact grinders, including hammermills and impactors, use the force of fast rotating massive impellers or hammers to strike and shatter free falling rock particles. These units have extremely high reduction ratios and produce a cubical product spread over a wide range of particle sizes with a large proportion of fines, thus making their application in industry segments such as cement manufacturing and agstone production extremely cost effective by reducing the need for subsequent grinding machines.

A hammermill consists of a high speed horizontal rotor with several rotor discs to which sets of swing hammers are attached (Figure 2-25). As rock particles are fed into the reduction chamber, they are impacted and shattered by the hammers which attain peripheral speeds as high as 76 meters/sec (250 feet per second). The shattered rock then collides with a steel breaker plate and is fragmented even further. A cylindrical grating or screen positioned at the discharge opening restrains oversize material until it is reduced to a size small enough to pass between the grate bars. Rotor speeds range from 250 to 1800 rpm and capacities to over 910 metric tons/hr (1,000 ton/hr). Product size is controlled by the rotor speed, the spacing between the grate bars, and by hammer length.

An impactor (Figure 2-26) is similar to a hammermill except that it has no grate or screen to act as a restraining member. Feed is broken by impact alone. Adjustable breaker bars are used instead of plates to reflect material back into the path of the impellers. Primary-reduction units are available which can reduce quarry-run material at over 910 metric tons/hr (1,000 ton/hr) capacity to about 2.5 cm (one inch). These units are not appropriate for hard abrasive materials, but are ideal for soft rocks like limestone.

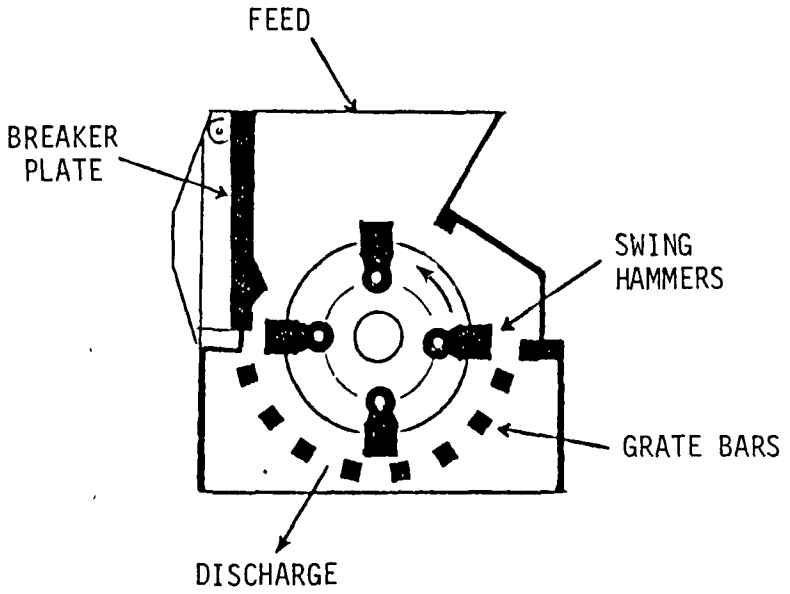

Figure 2-25. Hammermill.[4]

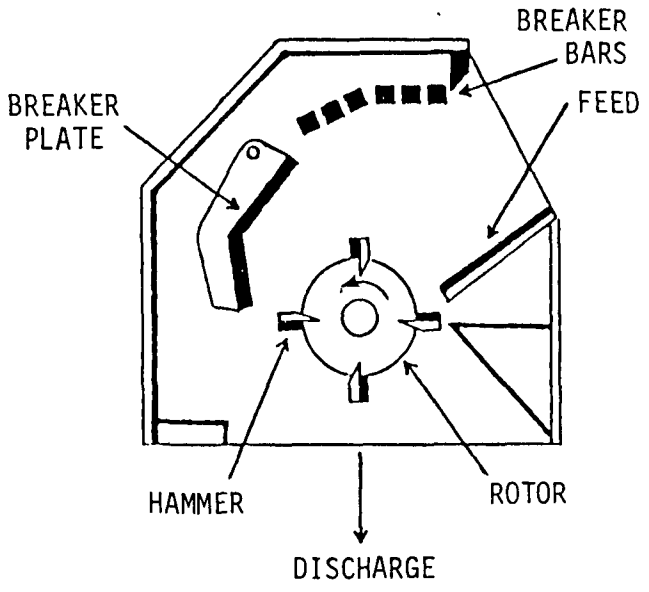

Figure 2-26. Impactor.[4]

2.2.2.5 Tumbling Mills - Ball mills and rod mills are classified as tumbling mills. These consist of a revolving drum approximately half filled with balls or rods that are 2.5 to 13 cm (one to five inches) in diameter as the grinding medium. Ball mills reduce the size of the feed mostly by impact while in rod mills, much of the reduction is done by rolling compression and attrition as the rods slide downward and roll over one another. Rod mills typically produce 4.5 to 180 metric tons/hr (5 to 200 ton/hr) of 1.68 mm (10 mesh) product while ball mills normally produce 0.91 to 45 metric tons/hr (1 to 50 ton/hr) of a powder of which 70 to 90 percent passes through a 0.074 mm (200 mesh) screen.[25] Figure 2-27 shows a ball mill grinder.

The operating parameters of ball and rod mills vary with feed and product size, type of mineral crushed, and mill capacity. These grinders normally have a speed of 10 to 40 revolutions per minute.[26] If the shell rotates too fast, centrifugal force keeps the balls or rods against the shell and minimal grinding will occur. The energy requirements for grinding hard material are about 4.1 kWh/metric ton (5 hp-hr/ton) for a rod mill and about 16 kWh/metric ton (20 hp-hr/ton) for a ball mill. As the desired product size becomes smaller, the capacity of a given grinder decreases while the energy requirement increases.[25]

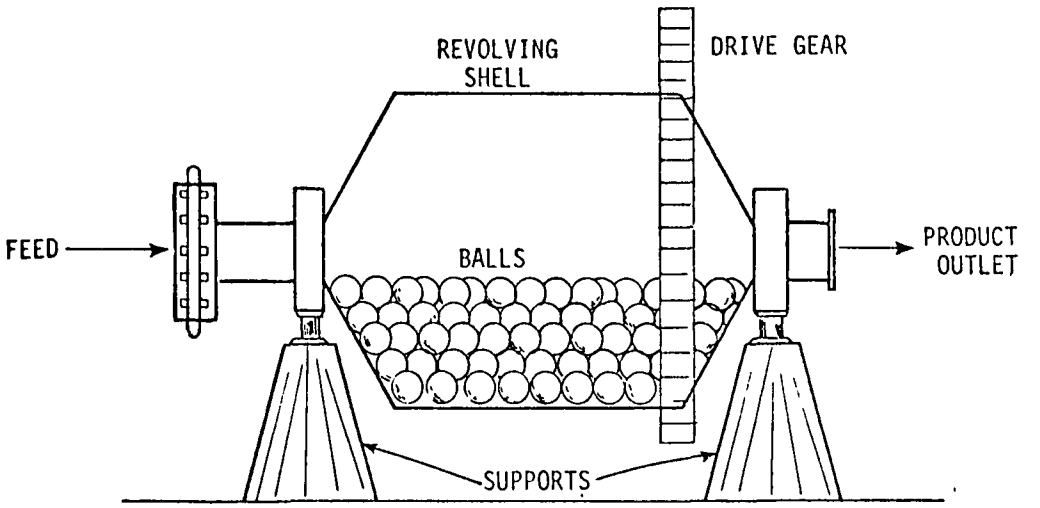

Figure 2-27. Ball mill.

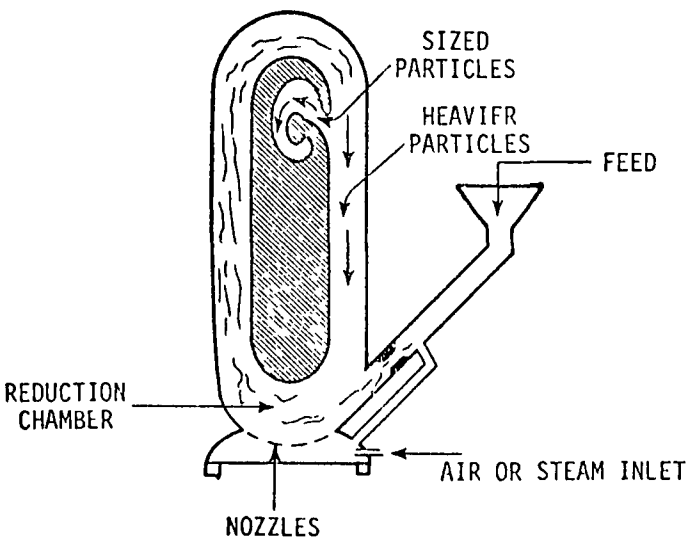

Figure 2-28. Fluid-energy mill.[25,27]

2.2.2.6 Fluid Energy Mills - When the material being ground must contain particles averaging 1 to 20 microns, an ultra-fine grinder such as the fluid energy mill is required. A typical fluid energy mill is shown in Figure 2-28. In this type of mill, the particles are suspended and conveyed by a high velocity gas stream in a circular or elliptical path. Size reduction is caused by impaction and rubbing against mill walls and interparticle attrition. Classification of the particles takes place at the upper bend of the loop shown in Figure 2-28. Internal classification occurs because the smaller particles are carried through the outlet by the gas stream while the larger particles are thrown against the outer wall by centrifugal force. Produce size can be varied by charging the gas velocity through the grinder.[25]

Fluid energy mills can normally reduce up to 0.91 metric tons/hr (1 ton/hr) of solids from 0.149 mm (100 mesh) to particles averaging 1/2 to 10 microns in diameter. Typical gas requirements are 0.45 to 1.8 kg (1 to 4 pounds) of steam or 2.7 to 4.1 kg (6 to 9 pounds) of air admitted at about 6.8 atm (100 psig) per 0.45 kg (pound) of product. These grinders have grinding chambers of about 2.5 to 20 cm (1 to 8 inches) in diameter and the equipment is 1.2 to 2.4 meters (4 to 8 feet) high.[25]

2.2.3 Screening

Screening is the process by which a mixture of stones is separated according to size and classified into various gradations. In screening, material is dropped into a screening surface with openings of desired size and separated into two fractions, undersizes which pass through the screen opening and oversizes which are retained on the screen surface. When material is passed over and through multiple screening surfaces, it is separated into fractions of known particle size distribution. Screening surfaces may be constructed of metal bars, perforated or slotted metal plates, or woven wire cloth. The mesh size of woven screens may range from 10 cm (four inches) to 0.037 mm (400 mesh) but are seldom used in the mineral industry under 0.841 mm (20 mesh).

The effectiveness or efficiency of a screening operation is a measure of its success in separating two or more material fractions. Screening effectiveness[a] may range from 60 to 75 percent. The capacity of a screen is primarily determined by the open area of the screening surface and the physical characteristics of the feed. It is usually expressed in metric tons per hour per square meter (tons per hour per square foot). Although screening may be performed wet or dry, dry screening is the most common.

[a] Effectiveness is a measure of the amount of the desired size that actually goes through the screen.

Screening equipment commonly used in this industry include grizzlies, shaking screens, vibrating screens and revolving screens.

2.2.3.1 Grizzlies - Grizzlies consist of a set of uniformly spaced bars, rods, or rails. The bars may be horizontal or inclined and are usually wider in cross section at the top than the bottom. This prevents the clogging or wedging of stone particles between bars. The spacing between the bars ranges from 5.0 to 20 cm (2 to 8 inches). Bars are usually constructed of manganese steel or other highly abrasion resistant material.

Grizzlies are primarily used to remove fines prior to primary crushing, thus reducing the load on the primary crusher. Grizzlies may be stationary cantilevered (fixed at one end with the discharge end free to vibrate) or mechanically vibrated. Vibrating grizzlies are simple bar grizzlies mounted on eccentrics (Figure 2-29). The entire assembly is moved forward and backward at about 100 strokes a minute, resulting in better flow through and across the grizzly surface.

2.2.3.2 Shaking Screens - The shaking screen consists of a rectangular frame with perforated plate or wire cloth screening surfaces, usually suspended by rods or cables and inclined at an angle of 14 degrees. The screens are mechanically shaken parallel to the plane of material flow at

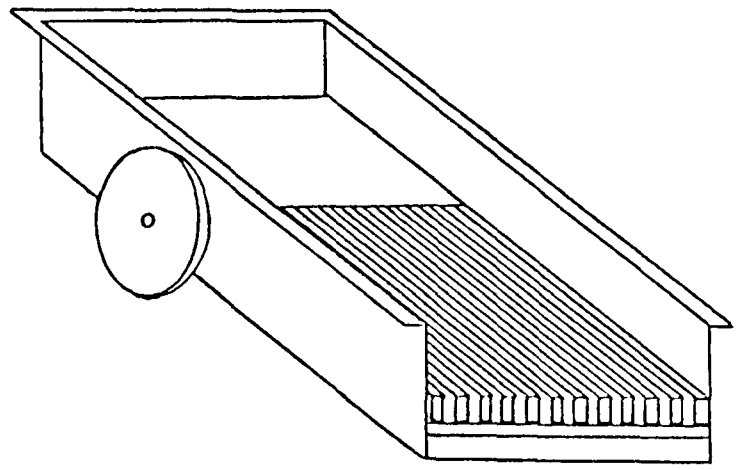

Figure 2-29. Vibrating grizzly.[4]

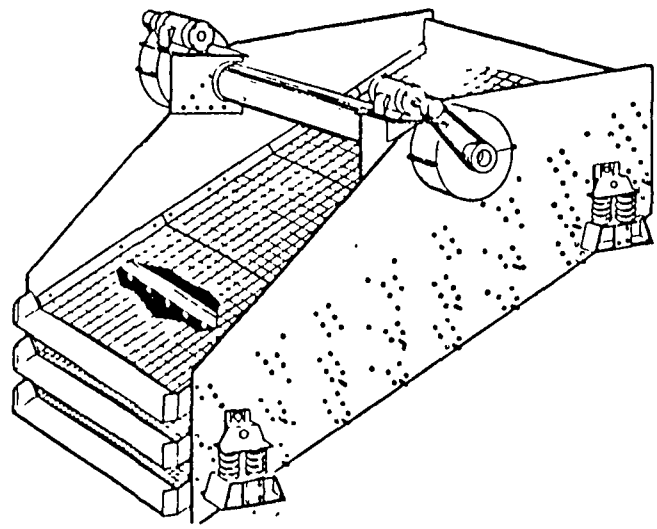

Figure 2-30. Vibrating screen.[4]

speeds ranging from 60 to 800 strokes per minute and at amplitudes ranging from 1.9 to 23 cm (3/4 to 9 inches).[4] Generally, they are used for screening coarse material, 1.3 cm (1/2-inch) or larger.

2.2.3.3 Vibrating Screens - Where large capacity and high efficiency are desired, the vibrating screen has practically replaced all other screen types. It is by far the most commonly used screen type in the mineral industry. A vibrating screen (Figure 2-30) essentially consists of an inclined flat or slightly convex screening surface which is rapidly vibrated in a plane normal or nearly normal to the screen surface. The screening motion is of small amplitude but high frequency, normally in excess of 3,000 cycles per minute. The vibrations may be generated either mechanically by means of an eccentric shaft, unbalanced fly wheel, cam and tappet assembly, or electrically by means of an electromagnet.

Mechanically-vibrated units are operated at about 1,200 to 1,800 rpm and at amplitudes of about 0.32 to 1.3 cm (1/8 to 1/2 inch). Electrically vibrated screens are available in standard sizes from 0.30 to 1.8 meters (12 inches to 6 feet) wide and 0.76 to 6.1 meters (2 1/2 to 20 feet) long. A complete screening unit may have one, two or three decks.

2.2.3.4 Revolving Screens - This screen type consists of an inclined cylindrical frame around which is wrapped a screen-

ing surface of wire cloth or perforated plate. Feed material is delivered at the upper end and, as the screen is rotated, undersized material passes through the screen openings while the oversized is discharged at the lower end. Revolving screens are available up to 1.2 meters (4 feet) in diameter and usually run at 15 to 20 rpm.[5]

2.2.4 Material Handling

Material handling devices are used to transport materials from one point to another and to load the product for consumer distribution. Materials transport equipment includes feeders, belt conveyors, bucket elevators, screw conveyors, and pneumatic systems. Bagging, barreling, and bulk loadout (i.e., via railroad cars, trucks, and ships) are methods of distributing the product.

2.2.4.1 Feeders - Feeders are relatively short, heavy-duty conveying devices used to receive material and deliver it to process units, especially crushers, at a uniform regulated rate. The various types used are the apron, belt, reciprocating plate, vibrating, and wobbler feeders.

Apron feeders are composed of overlapping metal pans or aprons which are hinged or linked by chains to form an endless conveyor supported by rollers and spaced between a head and tail assembly. These units are constructed to withstand high impact and abrasion and are available in various widths (0.46 to 1.8 meters [18 to 72 inches]) and lengths.

Belt feeders are essentially short, heavy duty belt conveyors equipped with closely spaced support rollers. Adjustable gates are used to regulate feed rates. Belt feeders are available in 0.46 to 1.2 meters (18 to 48 inch) widths and 0.91 to 3.7 meters (3 to 12 foot) lengths and are operated at speeds of 12 to 30 meters (40 to 100 feet) per minute.

Reciprocating plate feeders consist of a heavy-duty horizontal plate which is driven in a reciprocating motion causing material to move forward at a uniform rate. The feed rate is controlled by adjusting the frequency and length of the stroke.

Vibrating feeders operate at a relatively high frequency and low amplitude. Their feed rate is controlled by the slope of the feeder bed and the amplitude of the vibrations. These feeders are available in a variety of sizes, capacities and drives. When combined with a grizzly, both scalping and feeding functions are performed.

Wobbler feeders also perform the dual task of scalping and feeding. These units consist of a series of closely spaced elliptical bars which are mechanically rotated, causing oversize material to tumble forward to the discharge end and undersize material to pass through the spaces. The feed rate is controlled by the bar spacing and the speed of rotation.

2.2.4.2 Belt Conveyors - Belt conveyors are the most widely used means of transporting, elevating and handling materials in the minerals industry. As illustrated in Figure 2-31, belt conveyors consist of an endless belt which is carried on a series of idlers usually arranged so that the belt forms a trough. The belt stretched between a drive or head pulley and a tail pulley. Although belts may be constructed of other material, reinforced rubber is the most commonly used. Belt widths may range from 0.36 to 1.5 meters (14 to 60 inches), with 0.76 to 0.91 meter (30 to 36 inch) belts the most common. Normal operating speeds may range from 61 to 120 meters/minute (200 to 400 feet/minute). Depending on the belt speed, belt width and rock density, load capacities may be in excess of 1,360 metric tons (1,500 tons) per hour.

2.2.4.3 Elevators - Bucket elevators are utilized where substantial elevation is required within a limited space. They consist of a head and foot assembly which supports and drives an endless single or double strand chain or belt to which buckets are attached. Figure 2-32 depicts the three types most commonly used: the high-speed centrifugal-discharge, the slow speed positive or perfect-discharge, and the continuous-bucket elevator.

The centrifugal-discharge elevator has a single strand of chain or belt to which the spaced buckets are attached.

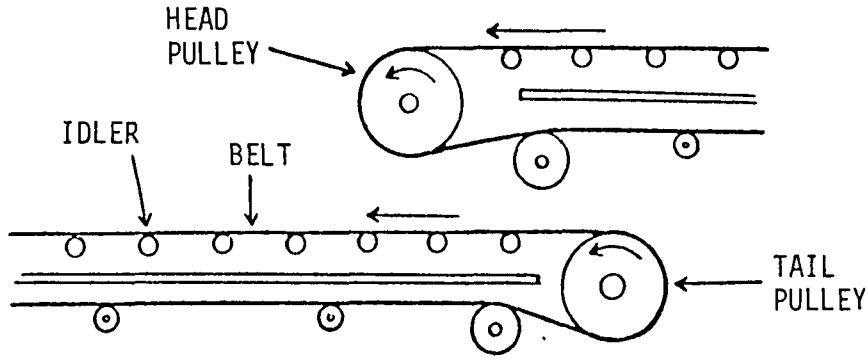

Figure 2-31. Conveyor belt transfer point.

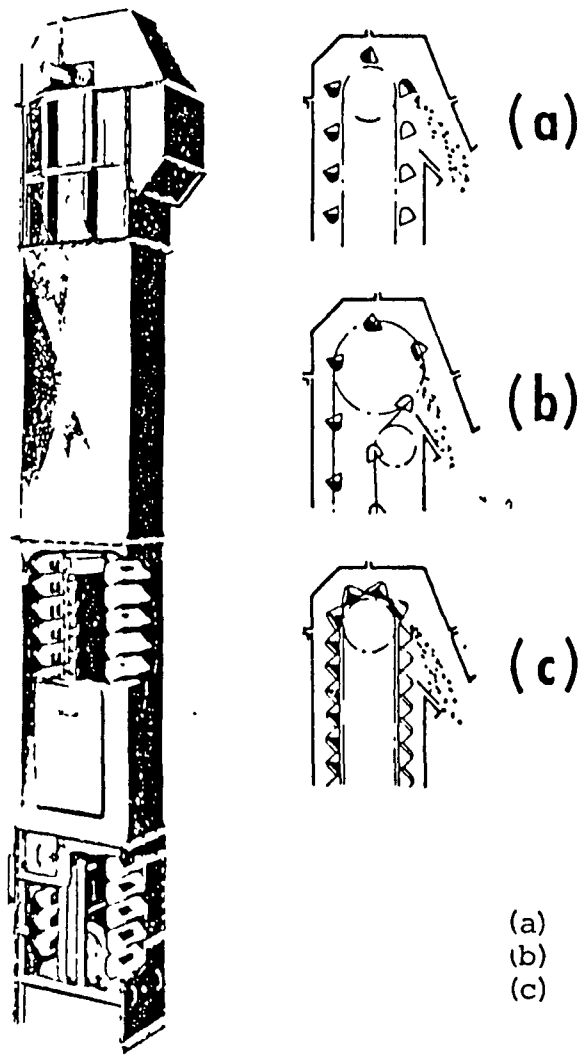

Figure 2-32. Bucket elevator types.

As the buckets round the tail pulley, which is housed within a suitable curved boot, the buckets scoop up their load and elevate it to the point of discharge. The buckets are so spaced so that at discharge, the material is thrown out by the centrifugal action of the bucket rounding the head pulley. The positive-discharge type also utilizes spaced buckets but differs from the centrifugal type in that it has a double-strand chain and a different discharge mechanism. An additional sprocket, set below the head pulley, effectively bends the strands back under the pulley causing the bucket to be totally inverted resulting in a positive discharge.

The continuous-bucket elevator utilizes closely spaced buckets attached to single or double strand belt or chain. Material is loaded directly into the buckets during accent and is discharged gently as a result of using the back of the precluding bucket as a discharge chute.

2.2.4.4 Screw Conveyors - Screw conveyors are comprised of a steel shaft with a spiral or helical fin which, when rotated, pushes material along a trough. Since these conveyors are usually used with wet classification, no significant emission problem is experienced.

2.2.4.5 Pneumatic Conveying Systems - Pneumatic conveying systems used in the non-metallic minerals industry (e.g., bentonite and diatomite) are usually the conventional type

which depend on air velocity for transporting materials. These may be vacuum systems (the particles are pulled through the shaft) or pressure systems (the particles are pushed through the shaft). Air is used as the conveying medium and can be supplied by centrifugal or positive-displacement blowers. Centrifugal blowers work at about 0.34 atm (5 psig) and can be used in vacuum or pressure systems. Positive displacement blowers work at pressures up to 1.7 atm (25 psig) and are used in pressure systems only.

2.2.5 Washing

Many minerals may require washing to remove fines or unwanted materials in order to meet specifications. Although a variety of equipment may be employed, jig or spiral separators are most often used. Jigs can be classified as washing screens. The mineral to be cleaned is typically supported on screens as water is pulse sprayed onto the mineral. The pulsing force on the raw mineral separates the unwanted fines and impurities from the rock. This unwanted portion floats away with the water and the desired mineral portion is left behind. Minerals are often classified by this technique because rock is stratified (like size forms separate layers) and each layer can be removed separately.

Spiral washers are commonly used to clean and classify minerals. It generally consists of a rotating screw operating in an incline trough. The feed material is dumped into

the continuously water fed deepest section of the trough as the spiral turns. The fines and light impurities are carried off with the water as the heavier portion sinks and is carried to the top of the incline and exits as clean ore. This is shown in Figure 2-33.

2.3 EQUIPMENT LIFE

The data used in this section were obtained from the literature and by personal communications with Pit and Quarry[8] and equipment vendors.[9] Table 2-5 lists the typical expected life of various types of equipment used in the non-metallic minerals processing industry. Routine maintenance and repair are of course required during the equipment's life.

The overall plant life was estimated to be 20 years. This was based primarily on the average life of the screens and crushers, since these are the major sources of particulate emissions.

2.3.1 Drills

The number of drills operated at a mine will depend very largely on the size of the operation. Although there is no data available to substantiate it, industry sources suggest that a 180 metric ton per hour (200 ton per hour) plant or less might require only one unit while a 540 metric ton per hour (600 ton per hour) operation might operate as

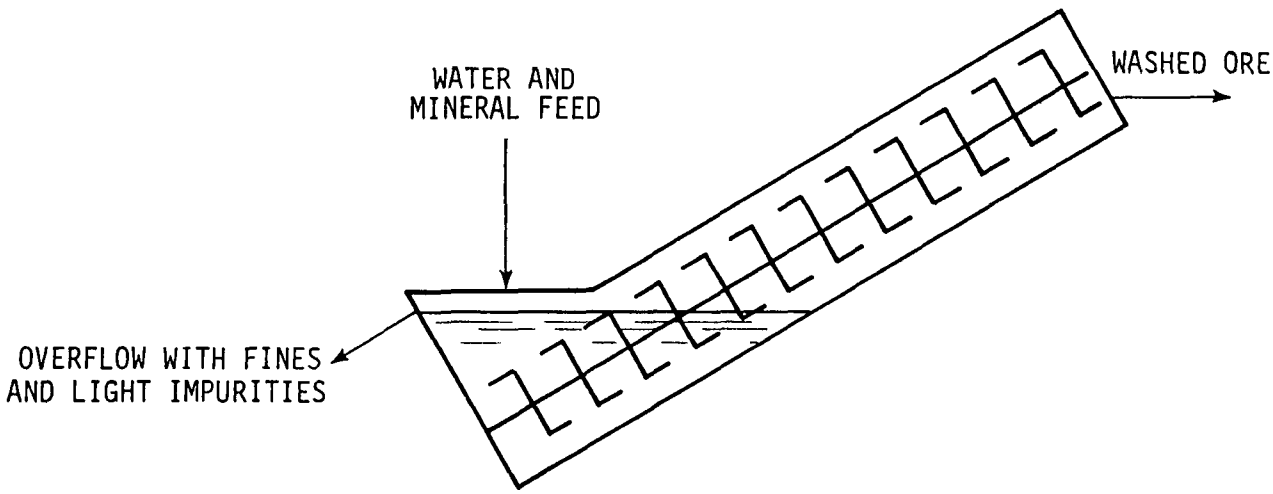

Figure 2-33. Schematic of a spiral washer.

Table 2-5. ESTIMATED LIFE OF EQUIPMENT

Equipment	Equipment life, years				Typical value
	Allis-Chalmers[a]	Pit & Quarry[b]	Crushed stone industry[c]	Denver Equipment[d]	
Primary crushers	15-60	20	15-22	20-25	20
Secondary crushers	15-60	25	12-18	20-30	20
Tertiary crushers	15-60	30			25
Grinding mills	20-60	30		20-30	25
Screens	10-20	30	12	5-10	15
Washers	15-30	20		5-10	20
Grizzlies	10-20	30		5	20
Conveyors (belt)	20-30	35	18-25	15-20	25
Dryers	20-30	35		15-20	25
Classifiers (screw)	15-30	20		20-30	20
Flotation machines		30			30
Calciners	20-30	30			25
Jigs	20-30	25		10-15	20
Thickeners	30-50	35		20-30	30
Air separators	15-30	20			20
Concentrating tables	30-50	30		10-20	30
Drills		10	6-9		10
Overall plant					20

[a] Reference 9.
[b] Reference 8.
[c] Reference 7.
[d] Reference 24.

many as three. The lifetime of a drill is approximately 6 to 10 years.

2.3.2 Screens

While screening media and bearings are vulnerable to wear and are replaced every three to four years, the screen structure enjoys a longer average life of about 12 to 15 years for stationary plants. Portable equipment has a shorter life span -- about 7 years -- being lighter and subject to greater abuse. The screens are repairable.

2.3.3 Conveyors

As with screens, normal use leads to the replacement of conveyor beltings and idlers at a rate of about every four or five years, but the replacement rate for the structure itself is far less frequent and may exceed 20 years. Consequently, most of the conveyor systems entering the market today are due to the construction of new plants, plant expansions, or operating changes from a truck-haul within the quarry to a conveyor delivery system. Higher plant operating rates do not normally demand additional conveyor units (belts can be widened or the capacities are already adequate). However, units are sometimes purchased to allow the operator greater operating flexibility or to increase the number of stockpiles.

2.3.4 Crushers and Grinders

The typical primary crusher has an average life of

slightly under 20 years and secondary or tertiary crushing or grinding units have average lives of about 15 to 25 years. Normal maintenance of wearing surfaces, of course, leads to the replacement of jaws, etc., at more frequent intervals. Balls and rods must be replaced in ball or rod mills and the shells may need periodic relining.

2.4 MINING AND CRUSHING PLANT EMISSIONS

2.4.1 General

All processing operations of non-metallic minerals are potential sources of particulate emissions. The emission of particulates is inherent to all surface mining and pulverizing processes. Emission sources may be categorized as either fugitive or process sources. Operations included within each category are listed in Table 2-6. Process sources include those sources whose emissions are amenable to capture and subsequent control. Fugitive sources are not amenable to control using conventional control systems and generally involve the reintrainment of settled dust by wind or machine movement.

Table 2-6. EMISSION SOURCES FROM MINERAL PROCESSING OPERATIONS

Process sources	Fugitive sources
Drilling	Blasting
Crushing and grinding	Loading and hauling at mine
Screening	Haul roads
Conveying (transfer points)	Stockpiles
Bagging	Plant yard conveying
Loading at mill	

Information available on the level of emissions from uncontrolled mineral operations is extremely limited. Estimates for uncontrolled plant process operations are presented in Table 2-7. These factors, where available, were obtained from EPA's emission factor publication.[10] Due to the lack of specific information on emissions from the processing of many of these minerals, emission factors were assumed to be similar to those for general stone crushing processes based on the type of processes used as shown in Table 2-8.

2.4.2 Factors Affecting Emissions from Mining and Crushing Plant Operations

In general, factors affecting emissions which are common to most crushing operations include: the moisture

Table 2-7. MINERAL PROCESSING EMISSION FACTORS, KG/METRIC TON (LB/TON)

Mineral	Crushing and grinding						Screening conveying handling	Other
	Primary		Secondary		Tertiary			
	Equipment type	Emission factor	Equipment type	Emission factor	Equipment type	Emission factor		
Barite	jaw	0.25[b] (0.5)[b]			ball mill	neg.[c]	1.0[b] (2.0)[b]	
Borates	hammermill	0.75[b] (1.5)[b,d]	hammermill	0.75[b] (1.5)[b]	hammermill	3.0[b] (6.0)[b]	1.0[b] (2.0)[b]	Total = 0.1 - 20[e] (0.2-40)[e]
Clay	jaw		gyratory		hammermill			Storage = 17[f] (34)[f] Grinding = 38[f] (76)[f]
Diatomite	hammermill	0.75[b,d] (1.5)[b,d]						
Feldspar	jaw	0.25[b] (0.5)[b]	gyratory	0.75[b] (1.5)[b]	ball mill	3.0[b] (6.0)[b]	1.0[b] (2.0)[b]	
Gypsum	gyratory	0.25[b] (0.5)[b]	cone	0.75[b] (1.5)[b]	roller mill	3.0[b] (6.0)[b]	1.0[b] (2.0)[b]	Conveyor only = 0.35[f] (0.7)[f]
Lightweight aggregates								
Perlite	jaw	0.25[b] (0.5)[b]			ball mill	3.0[b] (6.0)[b]	1.0[b] (2.0)[b]	
Slag	jaw	0.25[b] (0.5)[b]	jaw	0.75[b] (1.5)[b]			1.0[b] (2.0)[b]	
Vermiculite	hammermill	0.25[g] (0.5)[g]					1.0[b] (2.0)[b]	
Pumice	jaw	0.25[b] (0.5)[b]	gyratory	0.75[b] (1.5)[b]	ball mill	3.0[b,h] (6.0)[b,h]	1.0[b] (2.0)[b]	
Sand and gravel	jaw		gyratory					Total = 0.05[f] (0.1)[f]
Talc	jaw	0.25[b] (0.5)[b]	gyratory	0.75[b] (1.5)[b]	ball mill	3.0[b] (6.0)[b]	1.0[b] (2.0)[b]	

[a] Includes loading and bagging operations.

[b] Based on emission factors for stone quarrying and processing from AP-42 (Reference 10).

[c] Emissions are considered negligible because of wet milling.

[d] Assumed secondary crushing emission factor.

[e] Reference 11. Values based on Reference 10 were used for this report.

[f] Taken directly from AP-42 (Reference 10).

[g] Vermiculite is milled wet. However, fan-like action of hammermill will generate some particulate. Therefore, emission factor of 0.5 lb/ton was assumed.

[h] Used for less than ten percent of total production. Not included for model plant.

Table 2-8. PARTICULATE EMISSION FACTORS FOR STONE CRUSHING PROCESSES[a]

Process operation	Uncontrolled emission factor[b]	
	kg/MT	(lb/ton)
Primary crushing	0.25	(0.5)
Secondary crushing and screening	0.75	(1.5)
Tertiary crushing, grinding and screening	3.0	(6.0)
Screening, conveying and handling	1.0	(2.0)
Total	5.0	(10.0)

[a] Reference 10.

[b] Based on raw material entering primary crusher.

content of the ore, the type of ore processed, the amount of ore processed, the type of equipment and operating practices employed, and a variety of geographical and seasonal factors. These factors, discussed in more detail below, apply to both fugitive and process sources whether they are associated with quarrying or plant operations. In most cases, these factors combine to contribute to an operator's total emission problem.

The inherent moisture content or wetness of the ore processed has a substantial effect on total uncontrolled emissions. This is especially evident during mining, material handling, and initial plant process operations such as primary crushing. Surface wetness causes fine particles to agglomorate or adhere to the faces of larger sizes with a resultant dust suppression effect. However, as new fine particles are created by crushing and attrition, and as the moisture content is reduced by evaporation, this suppressive effect diminishes and may even disappear.

The type of ore processed is also important. Soft ores produce a higher percentage of screenings than do hard minerals because of their greater friability and lower resistance to fracture. Thus, it is generally accepted that the processing of soft rocks results in a greater potential for emissions than the processing of hard rock. The chemical nature of the particulate emissions are also dependant

on the type of ore processed. For example, particulates from some talc and sand and gravel processing are known to contain asbestos and free silica respectively.

The type of equipment and operating practices employed also affect uncontrolled emissions. Equipment selection is based on a variety of parameters including quarry characteristics, mineral type processed, and desired end products. In general, emissions from process equipment, including crushers, screens, conveyors, etc., are a function of the amount of material processed, its size distribution, and the amount of mechanically induced velocity imparted to it. For crushers, the crushing mechanism employed (compression or impact) will also affect emissions. The affect of equipment on uncontrolled emissions from all sources will be more fully discussed in subsequent sections of this report.

The most significant geographical factor affecting uncontrolled particulate emissions is climate. Predominant climatic conditions such as wind velocity, wind direction, precipitation and relative humidity can seriously affect emissions, especially fugitive emissions. It can certainly be expected that the level of emissions will be greater in arid regions of the country than in temperate ones. Other geographical elements which affect fugitive emissions include the topography and the extent and type of vegetation around a facility.

Seasonal changes also affect emissions. Obviously, due to the lower moisture content of the ore and high evaporation rate during the summer months, uncontrolled emissions during this period can be expected to be higher than at other times of the year. In addition, many operators shut down during the winter months, thus affecting their total annual emissions.

2.4.2.1 Mining - Sources of particulate emissions from mining operations include drilling, blasting, secondary breaking, loading, and hauling the minerals to the processing plant. Particulate emissions from drilling operations are primarily caused by the removal of cuttings and dust from the bottom of the hole by air flushing. Compressed air is released down the hollow drill center, forcing cuttings and dust up and out the annular space formed between the hole wall and drill. Factors affecting the level of uncontrolled emissions include the type of ore drilled, its moisture content, the type of drill used, and the hole diameter and penetration rate.

Emissions from blasting are obvious and inherently unavoidable. Factors affecting emissions include the size of the shot, blasting practices employed, mineral type, and meteorological conditions, especially wind. Emissions from secondary breaking (i.e. drop-balling) are slight and relatively insignificant.

Considerable fugitive dust emissions may result from loading haulage vehicles and hauling operations over unpaved roads. The most significant factor affecting emissions during loading is the wetness of the ore. Although no data exists on actual hauling operations, an emission factor of 1.0 kg per vehicle km (3.7 pounds per vehicle mile) has been reported for conventional vehicle traffic on unpaved country roads.[12] It can be assumed that mineral hauling emissions are higher, because of the greater size of the rubber-tired units over conventional vehicles and the finer nature of the road bed. Factors affecting fugitive dust emissions from hauling operations include the composition of the road surface, the wetness of the road, and the volume and speed of the vehicle traffic.

2.4.2.2 Crushing and Grinding - The generation of particulate emissions is inherent in the crushing process. Emissions are most apparent at crusher or grinder feed and discharge points. Emissions may be influenced by a variety of factors including the moisture content of the rock, the type of rock processed, and the type of crusher used. All but the latter have been previously discussed.

The most important element influencing emissions from crushing and grinding equipment is the reduction mechanism employed, compression or impact. The mechanism employed has a substantial effect on the size reduction that a machine

can achieve; the particle size distribution of the product, especially the proportion of fines produced and the amount of mechanically induced energy which is imparted to these fines.

Grinding units utilizing impact rather than compression produce a larger proportion of fines. This is illustrated in Figure 2-34 which shows the particle size distributions produced by the reduction of limestone with a hammermill and a jaw crusher. The distribution curve for the hammermill is characteristic of grinders in general and demonstrates the high proportion of fines contained in the product. The distribution curve for the jaw crusher illustrates the particle size distribution produced by compression type crushers including jaw, gyratory, cone and roll crushers. These crushers are designed to reduce material to a size regulated by the crusher setting, the gap between the crushing faces at the point of discharge. The peak of the curve demonstrates how the crusher produced a large proportion of particles corresponding to the crusher setting. A decrease in setting will, of course, result in depressing the curve and shifting the distribution into the smaller size range.

In addition to generating more fines, hammermills also impart more velocity to them as a result of the fan-like action produced by the fast rotating hammers. Because of

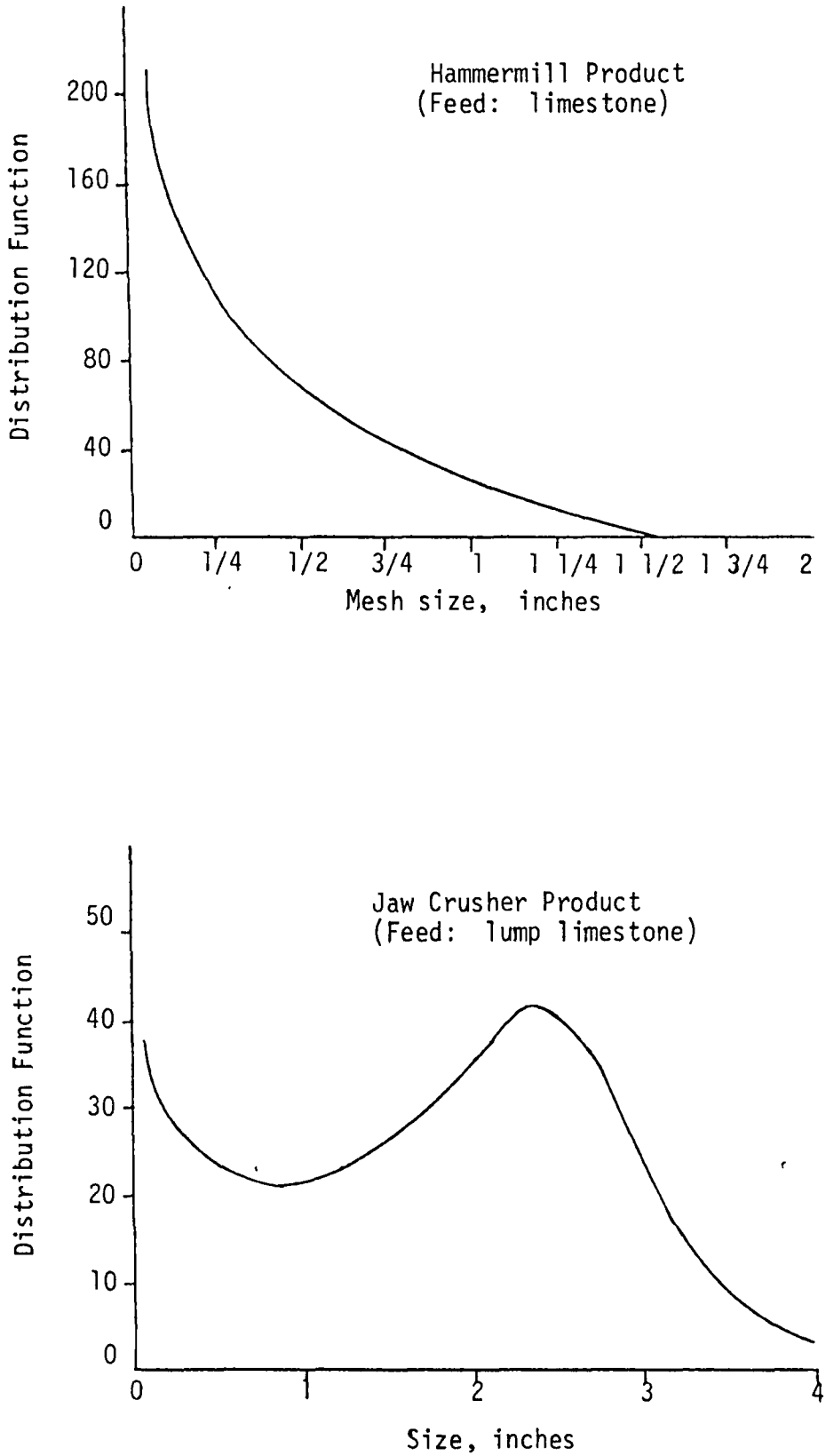

Figure 2-34. Particle size distribution curves. Based on Reference 13.

this and the high proportion of fines produced, hammermills generate more uncontrolled particulate emissions per ton of stone processed than any other crusher or grinder type.

The level of uncontrolled emissions from jaw, gyratory, cone and roll crushers closely parallels the reduction stage to which they are applied. As indicated in Table 2-8, the greater the reduction, the higher the emissions. In all likelihood, primary jaw crushers produce more dust than comparable gyratories because of the bellows effect of the jaw, and because gyratory crushers are usually choke fed thus minimizing the open spaces from which dust may be emitted. For subsequent reduction stages, cone crushers produce more fines as a result of attrition and consequently generate more dust.

Particulate emissions are generated from rod and ball mills at the grinders inlet and outlet. Gravity feed and discharge type ball and rod mills accept feed from a conveyor and discharge product into a screen or onto a conveyor. These transfer points are the source of particulate emissions. The outlet has the highest emissions potential because of the finer material. Air-swept ball mills have relatively small amounts of particulate emissions. These grinders operate with a classifier and are generally well controlled to minimize loss of product.

2.4.2.3 Screening - Dust is emitted from screening operations as a result of the agitation of dry stone. The level of uncontrolled emissions is dependent on the particle size of the material screened, the amount of mechanically induced energy transmitted, and other factors already discussed.

Generally, the screening of fines (less than 3.2 mm [1/8 inch]) produces higher emissions than the screening of coarse sizes. Also, screens agitated at large amplitudes and high frequency emit more dust than those operated at small amplitudes and low frequencies.

2.4.2.4 Conveying - Particulates may be emitted from any and all material handling and transfer operations. As with screening, the level of uncontrolled emissions is dependent on the size of the material handled and how much it is agitated. Perhaps the worst case occurs at conveyor belt transfer points where material is discharged from the conveyor at the head pulley or received at the tail pulley. Depending on the conveyor belt speed and the free fall distance between transfer points, considerable emissions may occur.

REFERENCES FOR CHAPTER 2.0

1. Mineral processing flowsheets, 2nd Edition. Denver, Colorado, Denver Equipment Company, 1962. 315 p.

2. Industrial Minerals and Rocks, 4th Edition. Baltimore, Maryland, Port City Press, 1975. 1360 p.

3. Clay, Ceramic, Refractory and Miscellaneous Minerals. Mineral Mining and Processing Industry - Volume III. Development Document for Effluent Limitations Guidelines and Standards of Performance. Office of Water and Hazardous Materials, U.S. Environmental Protection Agency, Washington, D.C., October 1975, 228 pp.

4. Vervaert, A.E., R. Jenkins, and A. Basala. An Investigation of the Best Systems of Emission Reduction for Quarrying and Plant Process Facilities in the Crushed and Broken Stone Industry. U.S. Environmental Protection Agency. Research Triangle Park, North Carolina. August 1975. p. 3: 9-14.

5. Pit and Quarry Handbook and Purchasing Guide, 63rd Edition, Chicago, Illinois, Pit and Quarry Publications, Inc., 1970. 650 p.

6. Perry, R.H. (Editor). Chemical Engineers' Handbook, 3rd Edition, New York, New York, McGraw-Hill, 1950. p. 1127.

7. The Crushed Stone Industry: Industry Characterization, and Alternative Emission Control Systems, prepared by Authur D. Little, Inc. for the U.S. Environmental Protection Agency, Contract No. 68-02-76-1349, Task Order No. 4. p. 52-54.

8. Personal Communication: Correspondence from J. G. Kostka, Pit and Quarry Publications, Inc. Chicago, Illinois to S. Oldiges, PEDCo-Environmental, Specialists, Inc., Cincinnati, Ohio. May 19, 1976.

9. Personal Communication: Correspondence from W. D. Meagher, Allis-Chalmers, Crushing and Screening Equipment Division, Appleton, Wisconsin to S. Oldiges, PEDCo-Environmental Specialists, Inc., Cincinnati, Ohio. June 1, 1976.

10. Compilation of Air Pollutant Emission Factors, 2nd Edition. U.S. Environmental Protection Agency. Publication No. AP-42. February, 1976. p. 8: 1-1 to 20-2.

11. Davis, W.E. National Inventory of Sources and Emissions. Barium, Boron, Copper, Selenium, and Zinc. Section 2. Boron. May, 1972.

12. Investigation of Fugitive Dust, Volume I - Sources, Emissions, and Control. Prepared by PEDCo-Environmental Specialists for the U.S. Environmental Protection Agency, Contract No. 68-02-0044, Task 9, June 1974. p. 3-6.

13. Ratcliffe, A. Crushing and Grinding. Chemical Engineering. McGraw Hill. July 10, 1972. p. 67

14. Mineral Facts and Problems, 1970 Edition. U.S. Bureau of Mines, Bulletin 650, 1970. 1291 p.

15. Mineral Processing Flowsheets, 1st Edition. Denver, Colorado, Denver Equipment Company.

16. Cummins A.B., and I.A. Given. SME Mining Engineering Handbook, Vol. 2. Baltimore, Maryland, Port City Press, 1973. 1306 p.

17. Kirk and Othmer. Enclyclopedia of Chemical Technology. Vols. 1-22. New York, New York, John Wiley and Sons, 1969.

18. Trace Pollutant Emissions from the processing of Non-Metallic Ores. Prepared by PEDCo-Environmental Specialists, Incorporated, for the U.S. Environmental Protection Agency, Contract No. 68-02-1321, Task Order No. 4, August 1974. 262 p.

19. E/MJ International Directory of Mining and Mineral Processing Operation. New York, New York, Engineering and Mining Journal, 1975. 488 p.

20. Personal Communication: Correspondence from R. Milanese, Perlite Institute, New York, New York, to S. Oldiges, PEDCo-Environmental Specialists, Inc., Cincinnati, Ohio. May 1976.

21. Personal Communication: Correspondence from T. R. Berger, Lightweight Aggregate Producers Association, Allentown, Pennsylvania, to S. Oldiges, PEDCo-Environmental Specialists, Inc., Cincinnati, Ohio. May 3, 1976.

22. Personal Communication: Correspondence from H. K. Eggleston, National Slag Association, Alexandria, Virginia to D. Powell, PEDCo-Environmental Specialists, Inc., Cincinnati, Ohio. May 19, 1976.

23. Personal Communication: Correspondence from J. Broad Department of Environmental Quality, Portland, Oregon to S. Oldiges, PEDCo-Environmental Specialists, Inc., Cincinnati, Ohio, May 19, 1976.

24. Personal Communication: Correspondence from T. A. Gray, Denver Equipment Division of Joy Manufacturing Company, Denver, Colorado to S. Oldiges, PEDCo-Environmental Specialists, Inc., Cincinnati, Ohio, June 28, 1976.

25. McCabe, W.L. and J. C. Smith. Unit Operations of Chemical Engineering. McGraw-Hill Book Company, New York, New York, 1967. pp. 820-846.

26. Design of Tumbling Mills. Perry's Chemical Engineer's Handbook. McGraw-Hill Book Company, New York, New York, 1969. pp. 8-21 to 8-23.

27. Air Conveying. Perry's Chemical Engineer's Handbook. McGraw-Hill Book Company, New York, New York. 1969. pp. 7-19 through 7-22.

3.0 EMISSION CONTROL TECHNIQUES

The diversity of the particulate emission sources inherent in quarrying and non-metallic processing operations has resulted in the utilization of a variety of control methods and techniques. Dust suppression techniques, designed to prevent particulate matter from becoming airborne, may be used and are applicable to both process and fugitive dust sources. Where particulate emissions can be contained and captured, collection systems are used. Emission sources and applicable control options are listed in Table 3-1.

3.1 CONTROL OF MINING AND QUARRYING OPERATIONS

3.1.1 Control of Drilling Operations

Drilling is used at times to facilitate blasting of the ore. Generally, there are two methods available for controlling particulate emissions from drilling operations, water injection and aspiration to a control device.

Water injection is a wet drilling technique in which water or water plus a wetting agent or surfactant is injected into the compressed air stream which is used for flushing the drill cuttings from the hole. The injection of the fluid into the airstream produces a mist which dampens

Table 3-1. PARTICULATE EMISSION SOURCES AND CONTROL OPTIONS

Operation or Source	Control Options
Drilling	a) Liquid injection (water or water plus a wetting agent)
	b) Capturing and venting emissions to a control device
Blasting	Practice good blasting practices
Loading (at mine)	Water wetting
Hauling	a) Water wetting
	b) Treatment with surface agents
	c) Soil stabilization
	d) Paving
	e) Traffic control
Crushing and Grinding	a) Wet dust suppression systems
	b) Capturing and venting emissions to a control device
Screening	Same as crushing
Conveying (transfer points)	Same as crushing
Stockpiling	a) Stone ladders
	b) Stacker conveyors
	c) Water sprays at conveyor discharge
	d) Pugmill
Storage Bins	Capturing and venting to a control device
Conveying	a) Covering
	b) Wet dust suppression
Windblown dust from stockpiles	a) Water wetting
	b) Surface active agents
	c) Covering
	d) Windbreaks
Windblown dust from roads and plant yard	a) Water wetting
	b) Oiling
	c) Surface active agents
	d) Soil stabilization
	e) Paving
	f) Sweeping
Loading (product into RR cars, trucks, ships)	a) Wetting
	b) Capturing and venting to control device
Bagging	c) Capturing and venting to control device
Magnetic Separation	d) Capturing and venting to control device

[a] Does not include processes involving combustion.

the ore particles and causes them to agglomerate. As the particles are blown from the hole, they drop at the drill collar as damp pellets rather than becoming airborne.

The addition of a wetting agent increases the wetting ability of untreated water by reducing its surface tension.[1] This reduces the amount of water required for effective control and consequently minimizes the drawbacks of decreased penetration rate, increased wear, restricted chip circulation, increased back pressure at the bottom of the hole, and potential collaring (drill sticking in the hole). The amount of solution required, is dependent upon the size of the hole, the drilling rate for a 8.8 cm (3 1/2 inch) diameter hole is about 26 liters (7 gallons) per hour. The effective application of water injection to a drilling operation should result in essentially no visible emissions.

Dry collection systems may also be used to control emissions from the drilling process. A shroud or hood encircles the drill rod at the hole collar. Emissions are captured under vacuum and vented via a flexible duct to a control device for collection. Various devices may be used with varying efficiencies. Most commonly used are cyclones or fabric filters preceded by a settling chamber. Collection efficiencies for cyclone collectors are, however, usually not high. Although suitable for coarse to medium

sized particles, these collectors are generally unsuitable for fine particulates. Fabric filter collectors, on the other hand, exhibit collection efficiencies in excess of 99 percent. Air volumes required for effective control range from 14 to 42 m^3/min (500 to 1,500 cfm) depending on the type of ore drilled, hole size, and penetration rate.

3.1.2 Control of Blasting Operations

There are currently no effective methods for controlling particulate emissions from blasting. Good blasting practices may, however, minimize the effects of blasting, noise, vibration, air shock and dust emissions. The use of multi-delay detonation devices which detonate the explosive charges in millisecond time intervals may reduce these effects and result in lower emissions. Also, the scheduling of blasting operations so that they only occur under favorable meterological conditions of low wind and low inversion potential may substantially reduce the subsequent impact of emissions from blasting.

3.1.3 Control of Loading Operations

The loading of dry raw materials by either loaders or shovels generates fugitive dust emissions. Fairly effective control may be attained by wetting dry materials prior to loading. Water trucks equipped with hoses or movable watering systems may be used.

3.1.4 Control of Hauling Operations

The hauling of raw materials from the mine or quarry to the processing plant by large rubber-tired haulage vehicles over unpaved haul roads is responsible for a large portion of the fugitive dust generated by quarrying and mining operations. Haul roads are temporary in nature to accommodate advancing quarry faces and are thus, usually unimproved. Emissions from hauling operations are proportional to the condition of the road surface and the volume and speed of vehicle traffic. Consequently, control measures include methods to improve road surfaces or suppress dust and operational changes to minimize the effect of vehicle traffic.

Various road treatment methods may be used to control fugitive emissions from haulage roads. These include watering, surface treatment with chemical dust suppressants, soil stabilization and paving. The most commonly used method is watering. Water is applied to the road in a controlled manner by water trucks equipped with either gravity spray bars or pressure sprays for distribution. The amount of water required, frequency of application and effectiveness are dependent on a variety of conditions including weather elements, road bed condition and the willingness of the operator to allocate resources, as required, to do an effective job. In many cases, watering has

become an autonomous, cosmetic operation with little regard to its actual effectiveness. The addition of a wetting agent increases the wetting ability of untreated water by reducing its surface tension.[1]

On warm and windy days watering may be totally ineffective because of rapid evaporation. Obviously, after a rainfall watering may not even be necessary. Excessive watering may result in muddy and slippery road surfaces which create hazardous conditions for haulage vehicles.

Road dust can also be controlled by periodic application of wet or dry surface treatment chemicals for dust suppression. The most commonly applied form of surface treatment is oiling. Waste oils such as crankcase drainings are spread over roadways at a rate of about 0.23 liters/m^2 (0.05 gallons per square yard) of roadway.[2] The frequency of application may range from once per week to only several times per season, depending on weather conditions. A drawback to oiling is the potential adverse environmental impact of oil leaching into streams. Oiling is usually supplemented by watering. Again, this treatment must be used judiciously since improper application can cause slippery, dangerous road conditions.

Other treatments include the application of hygroscopic chemicals (substances which absorb moisture from the air) such as organic sulfonates and calcium chloride ($CaCl_2$).

When spread directly over unpaved road surfaces, these chemicals dissolve in the moisture they absorb and form a clear liquid which is resistant to evaporation. Consequently, these chemicals are most effective in areas of relative high humidity. Because they are water soluble, however, their use in areas of frequent rainfall may require repeated application. In addition, these agents may contribute to the increased corrosion of expensive haulage vehicles.

An alternative to surface treatment is the use of soil stabilizers. These agents usually consist of a water dilutable emulsion of either synthetic or petroleum resins which act as an adhesive or binder. Substantial success has been reported by quarry operators in California[3] and Arizona[4] using one such agent called Coherex,[a] a non-volatile emulsion of about 60 percent natural petroleum resins and 40 percent wetting solution. Initial treatment for new roads depends on the characteristics of the road bed and the penetration depth required. For most roads, a one part Coherex to four parts of water dilution (1:4) applied at an application rate of about 9.0 to 23 liters/m^2 (2 to 5 gallons per square yard) is effective. Once the road has been stabilized by repeated application and compaction by vehicle traffic over a period of a few weeks, the dilution may be

[a] The use of trade names or commercial products does not constitute endorsement or recommendation for use by the Environmental Protection Agency.

increased to 1:7 to 1:20 for daily maintenance. In most cases, only one pass per day is sufficient to effectively control dust. In addition to the environmental benefits, operators report considerable savings and operating benefits over traditional watering methods including reduced labor costs, lower maintenance costs on haulage vehicles and safer road conditions.

Paving is probably the most effective means of reducing particulate emissions. It may, however, be impractical due to high initial cost and subsequent maintenance and repair costs. Initial paving costs may exceed $12,400 per kilometer ($20,000 per mile, in 1973) for a 7.6 cm (3-inch) bituminous surface.[5] Also, due to heavy vehicle traffic, roads may be damaged resulting in relatively high maintenance and repair costs. No studies have been reported to determine the relative cost-effectiveness of any of these control options.

Operational measures which would result in reduced emissions include the reduction of traffic volume and traffic speed control. Replacing smaller haulage vehicles with larger capacity units would minimize the number of trips required and thus effectively reduce total emissions per ton of rock hauled. The institution of a stringent traffic speed control program would also result in reduced dust emissions and at no additional cost. According to a study on emissions from conventional vehicle traffic on

unpaved roads, a reduction in the average vehicle speed from 48 km/hr (30 mph), for which an emission level of 1.0 kg per vehicle km (3.7 pounds per vehicle mile) was established, to 40, 32 and 24 km/hr (25, 20 and 15 mph) produced emission reductions of 25, 33 and 40 percent respectively.[6] Although the situations may not be completely analogous, it can be concluded that an enforced speed limit of 8 to 16 km/hr (5 to 10 mph) would substantially reduce fugitive dust emissions from quarry vehicle traffic and provide additional benefits including increased safety conditions and longer vehicle life.

The utilization of wind breaks, consisting of rapidly growing hedges or temporary wooden walls, should also be considered to reduce emissions.

3.2 CONTROL OF PLANT PROCESS OPERATIONS

A typical non-metallic mineral processing plant, consisting of crushers, grinders, screens, conveyor transfer points, and storage facilities, contains a multiplicity of dust producing points. As such, effective emission control can present a rather complex and difficult problem. Emission control methods utilized to reduce emissions include wet dust suppression, dry collection, and a combination of the two. Wet dust suppression consists of introducing moisture into the material flow, causing fine particulate matter to be confined and remain with the material flow

rather than become airborne. Dry collection involves hooding and enclosing dust producing points and exhausting emissions to a collection device. Combination systems utilize both methods at different stages throughout the processing plant. In addition to these control techniques, the use of enclosed structures to house process equipment may also be quite effective in preventing atmospheric emissions. When a building is used to enclose a process, it generally must be vented through a control device.

3.2.1 Wet Dust Suppression

In a wet dust suppression system, dust emissions are controlled by applying moisture in the form of water or water plus a wetting agent sprayed at critical dust producing points in the process flow. This causes dust particles to adhere to larger mineral pieces or to form agglomerates too heavy to become or remain airborne. Thus, the objective of wet dust suppression is not to fog an emission source with a fine mist to capture and remove particulates emitted, but rather to prevent their emission by keeping the material moist at all process stages.

Water sprays cannot be used in all cases since it may interfere with further processing such as screening or grinding where aglomeration cannot be tolerated. In addition, the capacity of the dryers used in some of the processing steps may limit the amount of water that can be sprayed onto

the raw materials. Once the materials have passed through the drying operations, water cannot be added and other means of dust control must be utilized.

When plain or untreated water is used, because of its unusually high surface tension (72.75 dynes/cm^2 at 20°C), the addition of 5 to 8 percent moisture (by weight), or greater, may be required to adequately suppress dust.[7] In many installations this may not be acceptable because excess moisture may cause screening surfaces to blind, thus reducing both their capacity and effectiveness, or result in the coating of mineral surfaces yielding a marginal or non-specification product. To counteract these deficiencies, small quantities of specially formulated wetting agents or surfactants are blended with the water to reduce its surface tension and consequently improve its wetting efficiency so that dust particles may be suppressed with a minimum of added moisture. Although these agents may vary in composition, their molecules are characteristically composed of two groups, a hydrophobic group (usually a long chain hydrocarbon) and a hydrophylic group (usually a sulfate, sulfonate, hydroxide or ethylene oxide). When introduced into water, these agents effect an appreciable reduction in its surface tension (to as low as 27 dynes/cm^2).[8] The dilution of such an agent in minute quantities in water (1 part wetting agent to 1,000 parts water) is reported to make dust control practical throughout an entire crushing plant.

In a crushed stone plant, as little as 1/2 to 1 percent total moisture was added per ton of stone processed.[9]

In applying the added moisture to the process flow, several application points are normally required. Since the time required for the proper distribution of the added moisture on the mineral is critical to achieving effective dust control, treatment normally begins as soon as possible after the material to be processed is introduced into the plant. As such, the initial application point is commonly made at the primary crusher truck dump. In addition to introducing moisture prior to processing, this application contributes to reducing intermittent dust emissions generated during dumping operations. Spray bars located either on the periphery of the dump hopper or above it are used. Applications are also made at the discharge of the primary crusher and at all secondary and tertiary crushers where new dry surfaces and dust are generated by the fracturing of stone in the crusher. In addition, treatment may also be required at feeders located under surge or reclaim piles if this temporary storage results in sufficient evaporation. Further applications at screens, conveyor transfer points, conveyor and screen discharges to bins, and conveyor discharges to storage piles may or may not be necessary because, if properly conditioned at application points, the wetted

material exhibits a carryover dust control effect such that it may be handled through a number of material handling operations without dusting. The amount of moisture required at each application point is dependent on a number of factors including the wetting agent used, its dilution ratio in water, the type and size of process equipment used, and the characteristics of the material processed (type, size distribution, feed rate and moisture content).

A typical wet dust suppression system, such as the Chem-Jet System[a] manufactured by the Johnson-March Corporation and illustrated in Figure 3-1, contains a number of basic components and features including: (1) a dust control agent (compound M-R); (2) proportioning equipment; (3) a distribution system; and (4) control actuators. A proportioner and pump are necessary to proportion the wetting agent and water at the desired ratio and to provide the moisture in sufficient quantity and at adequate pressure to meet the demands of the overall system.

Distribution is accomplished by spray headers fitted with pressure spray nozzles. One or more headers are used to apply the dust suppressant mixture at each treatment point at the rate and spray configuration required to effect dust control. A variety of nozzle types may be used in-

---

[a] The use of trade names or commercial products does not constitute endorsement or recommendation for use by the Environmental Protection Agency.

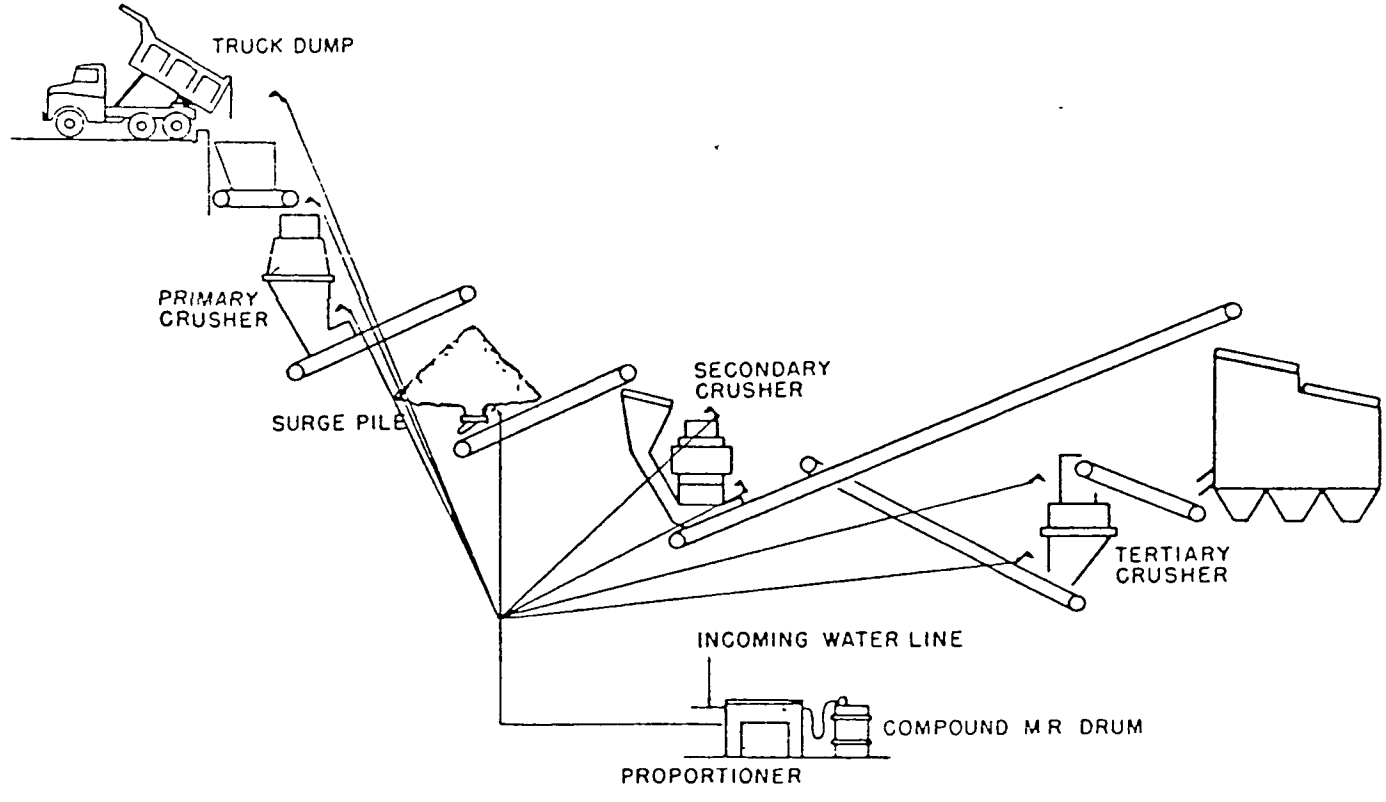

Figure 3-1. Wet dust suppression system.[10]

cluding hollow-cone, solid cone or fan nozzles, depending on the spray pattern desired. To prevent nozzle plugging, screen filters are used. Figure 3-2 shows a typical arrangement for the control of dust emissions at a crusher discharge.

Spray actuation and control is important to prevent waste and undesirable muddy conditions, especially when the material flow is intermittent. Spray headers at each application point are normally equipped with an on-off controller which is interlocked with a sensing mechanism so that sprays will be operative only when there is material actually flowing. In addition, systems are commonly designed to operate under all weather conditions. To provide protection from freezing, exposed pipes are usually traced with heating wire and insulated. When the system is not in use, it should be drained to insure that no water remains in the lines. During periods of prolonged cold weather when temperatures remain below 0°C, wetted raw materials will freeze into large blocks and adhere to cold surfaces such as hopper walls. Additional labor may be required to prevent such build-ups.

The Johnson-March Corporation claims that better than 90 percent control efficiency is attainable from primary crusher to stockpile and reclaim at a rock crushing plant with a well designed wet dust suppression system.[11] Since

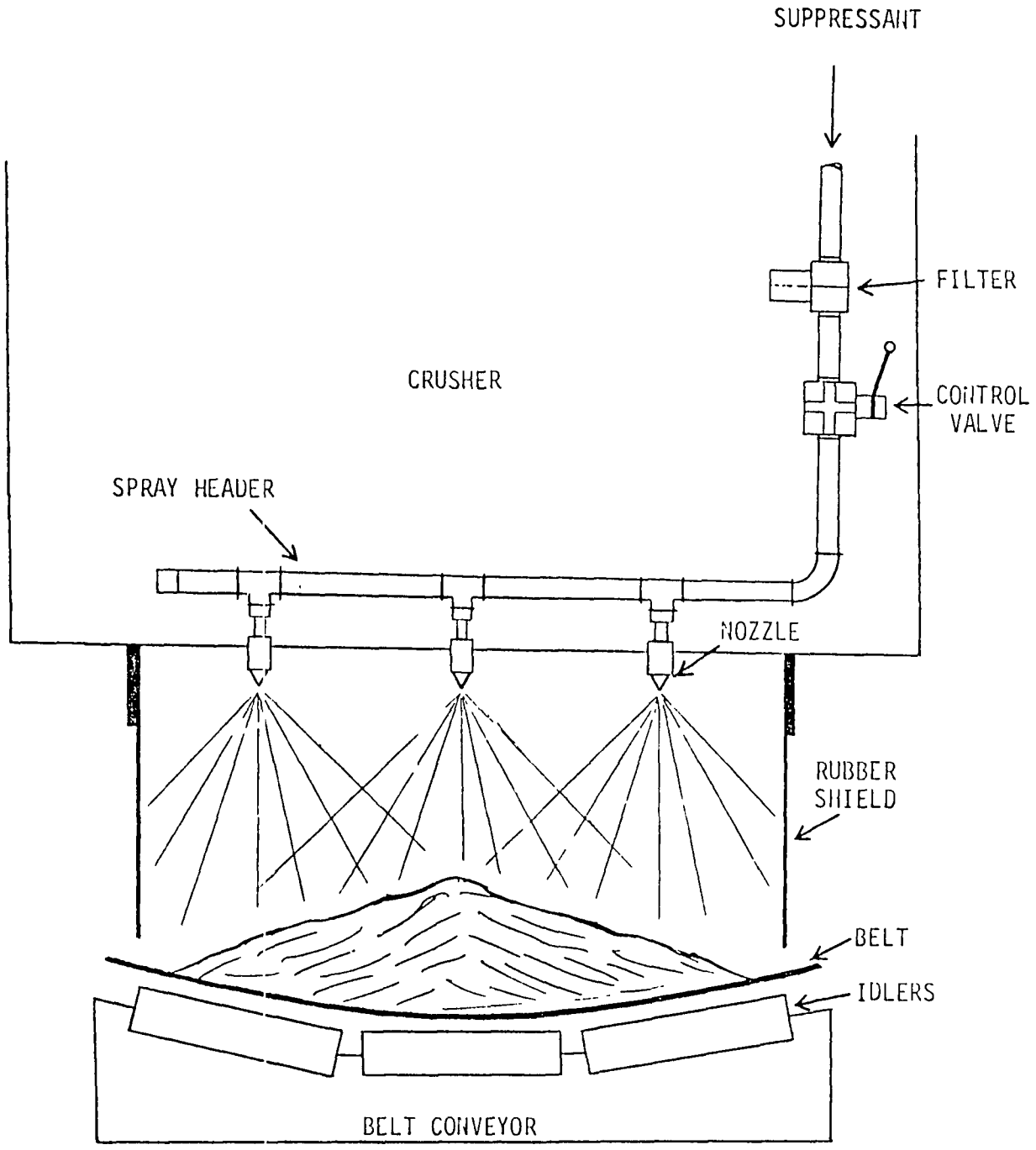

Figure 3-2. Dust suppression application at crusher discharge.

these emissions are unconstrained and not amenable to testing, no actual particulate emission measurements have been made to verify or dispute this contention.

3.2.2 Dry Collection Systems

Particulate emissions generated at plant process facilities (crushers, screens, conveyor transfer points and bins) may be controlled by capturing and exhausting emissions to a collection device. Depending on the physical layout of the plant, emission sources may be manifolded to a single centrally located collector or to a number of strategically placed units. Collection systems consist of an exhaust system utilizing hoods and enclosures to confine and capture emissions, and ducting and fans to convey the captured emissions to a collection device for particulate removal prior to exhausting the airstream to the atmosphere.

3.2.2.1 Exhaust Systems - If a collection system is to effectively prevent particulate emissions from being discharged to the atmosphere, local exhaust systems including hooding and ducting must be properly designed and balanced. Process equipment should be enclosed as completely as practicable, allowing for access for routine maintenance and inspection requirements. For crushing facilties, recommended hood face or capture velocities, range from 61 to 150 meters (200 to 500 feet) per minute.[12] In general, a minimum indraft velocity of 61 meters (200 feet) per minute

should be maintained through all open hood areas. Proper design of hoods and enclosures will minimize exhaust volumes required and, consequently, power consumption. In addition, proper hooding will minimize the effects of cross drafts (wind) and the effects of induced air (i.e., air placed in motion as a result of machine movement or falling material). Good duct design dictates that adequate conveying velocities be maintained so that the dust particles transported will not fall out and settle in the ducts along the way to the collection device. Based on information for crushed stone, conveying velocities recommended for mineral particles range from 1,100 to 1,400 meters/min (3,500 to 4,500 fpm).[13] Completely adequate construction specifications are available and have been utilized to produce efficient, long-lasting systems. Various guidelines establishing minimum ventilation rates required for the control of crushing plant facilities, and upon which the ventilation rates most commonly utilized in the industry are based, are briefly discussed below.

Conveyor Transfer Points

At belt to belt conveyor transfer points, hoods should be designed to enclose both the head pulley of the upper belt and the tail pulley of the lower belt as completely as possible. With careful design, the open area should be reduced to about 0.15 square meters per meter (0.5 square

feet per foot) of belt width.[14] Factors affecting the air volume to be exhausted include the conveyor belt speed and the free-fall distance to which the material is subjected. Recommended exhaust rates are 33 m^3 per min per meter (350 cfm per foot) of belt width for belt speeds less than 61 meters/min (200 fpm) and 150 $meters^3$/min (500 cfm) for belt speeds exceeding 61 meters/min (200 fpm).[15] For a belt to belt transfer with less than a 0.91 meter (three foot) fall, the enclosure illustrated in Figure 3-3 is commonly used.

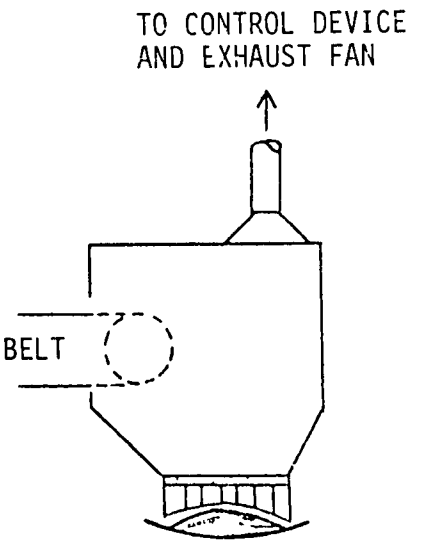

Figure 3.3 Hood configuration for conveyor transfer, less than 0.91 meter (3-foot) fall.

For belt to belt transfers with a free-fall distance greater than 0.91 meters (three feet) and for chute to belt transfers, an arrangement similar to that depicted in Figure 3-4 is commonly used. The exhaust connection should be made as far downstream as possible to maximize dust fallout and thus minimize needless dust entrainment. For very dusty material, additional exhaust air may be required at the tail pulley of the receiving belt. Recommended air volumes are 20 m^3/min (700 cfm) for belts 0.91 meters (three feet) wide and less, and 28 m^3/min (1,000 cfm) for belts wider than 0.91 meters (three feet).[16]

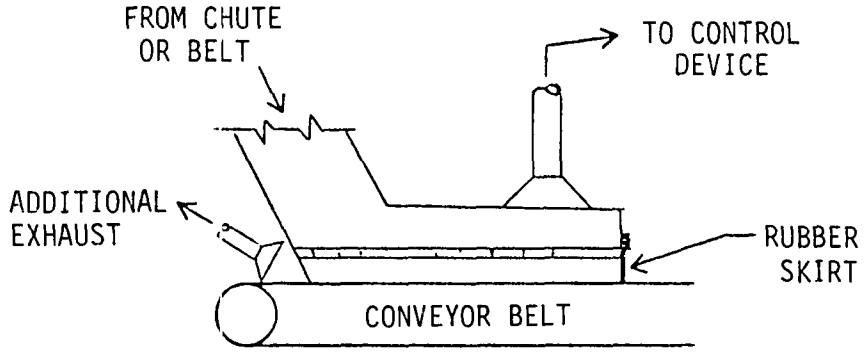

Figure 3-4. Hood configuration for a chute to belt or conveyor transfer, greater than 0.91 meters (3-foot) fall.[16]

Belt or chute to bin transfer points differ from the usual transfer operation in that there is no open area downstream of the transfer point. Thus, emissions are emitted only at the loading point. As illustrated in Figure 3-5, the exhaust connection is normally located at some point remote from the loading point and exhausted at a minimum rate of 61 m^3/min per square meter (200 cfm per square foot) of open area.[17]

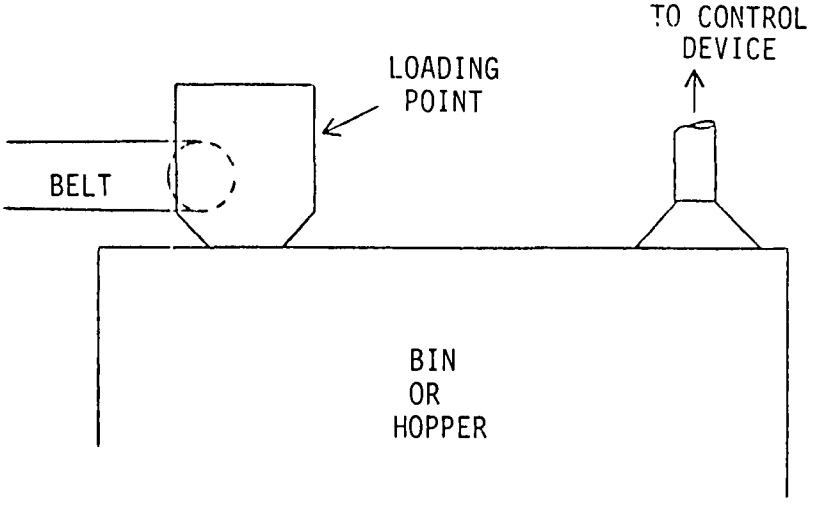

Figure 3-5. Exhaust configuration at bin or hopper.

Screens

A number of exhaust points are usually required to achieve effective control at screening operations. A full coverage hood, as depicted in Figure 3-6, is generally used to control emissions generated at actual screening surfaces. Exhaust volumes required vary with the surface area of the

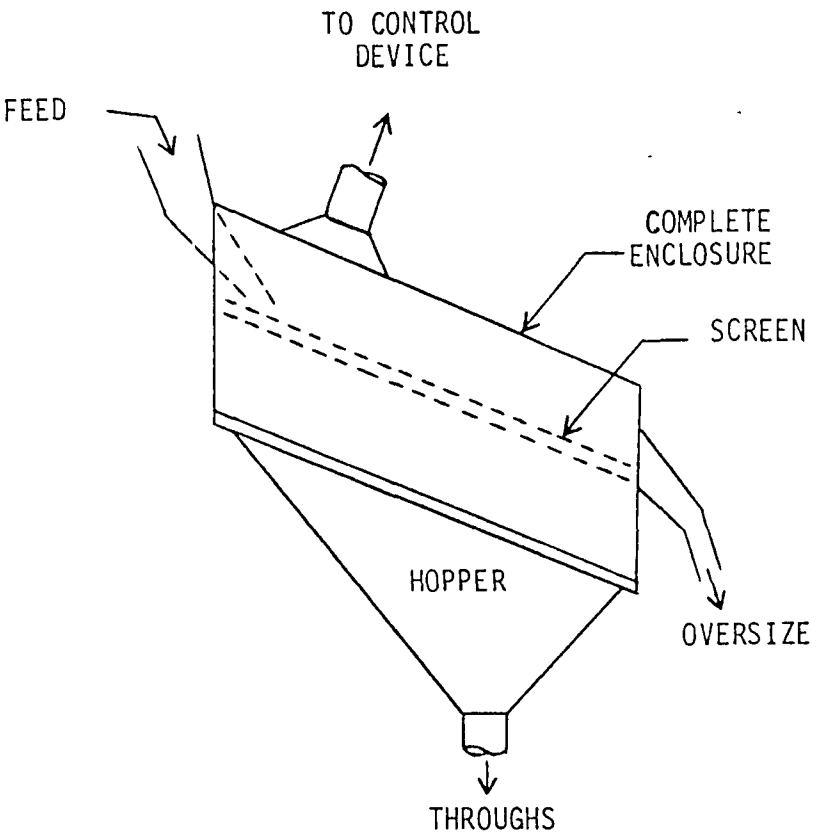

Figure 3-6. Hood configuration for vibrating screen.

screen and the amount of open area around the periphery of the enclosure. A well-designed enclosure should have a space of no more than 5 to 10 centimeters (2 to 4 inches) around the periphery of the screen. A minimum exhaust rate of 15 m^3/min per square meter (50 cfm per square foot) of screen area is commonly used with no increase for multiple decks.[18] Additional ventilation air may be required at the discharge chute to belt or bin transfer points. If needed, these points are treated as regular transfer points and exhausted accordingly.

Crushers and Grinders

Hooding and air volume requirements for the control of crusher and grinder emissions are quite variable and for the most part based on judgment and experience. The only established criterion is that a minimum indraft velocity of 61 meters per min (200 fpm) be maintained through all open hood areas. To achieve this, face velocities in excess of 150 meters per minute (500 fpm) may be necessary to overcome induced air motion, resulting from the material feed and discharge velocities and the mechanically induced velocity (fan action) of a particular equipment type.[19] To achieve effective emission control, ventilation should be applied at both the upper portion or feed end of the device and at the discharge point. Where access to a device is required for maintenance, removable hood sections may be utilized.

In general, the upper portion of the crusher or grinder should be enclosed as completely as possible, and exhausted according to the criterion established for transfer points. The discharge to the belt transfer should also be totally enclosed. The exhaust rate, however, may vary considerably depending on crusher type. For impact crushers or grinders, exhaust volumes may range from 110 to 230 m^3/min (4,000 to 8,000 cfm).[20] For compression type crushers, an exhaust rate of 46 m^3/min per meter (500 cfm per foot) of discharge opening should be sufficient.[20] In either case, pick-up should be applied downstream of the crusher for a distance of at least 3.5 times the width of the receiving conveyor.[20] A typical hood configuration used to control particulate emissions from a cone crusher is depicted in Figure 3-7.

Product Loading and Bagging

Particulate emissions from truck loading and other bulk loading operations can be minimized by reducing the open height that material must fall from a silo to the shipping vehicle. Shrouds, telescoping feed tubes, and windbreaks can reduce the fugitive emissions from this intermittent source.

Bagging operations are controlled by local exhaust systems and vented to a fabric filter system for product recovery. Hood face velocities on the order of 150 meters (500 feet) per minute should be used. An automatic bag

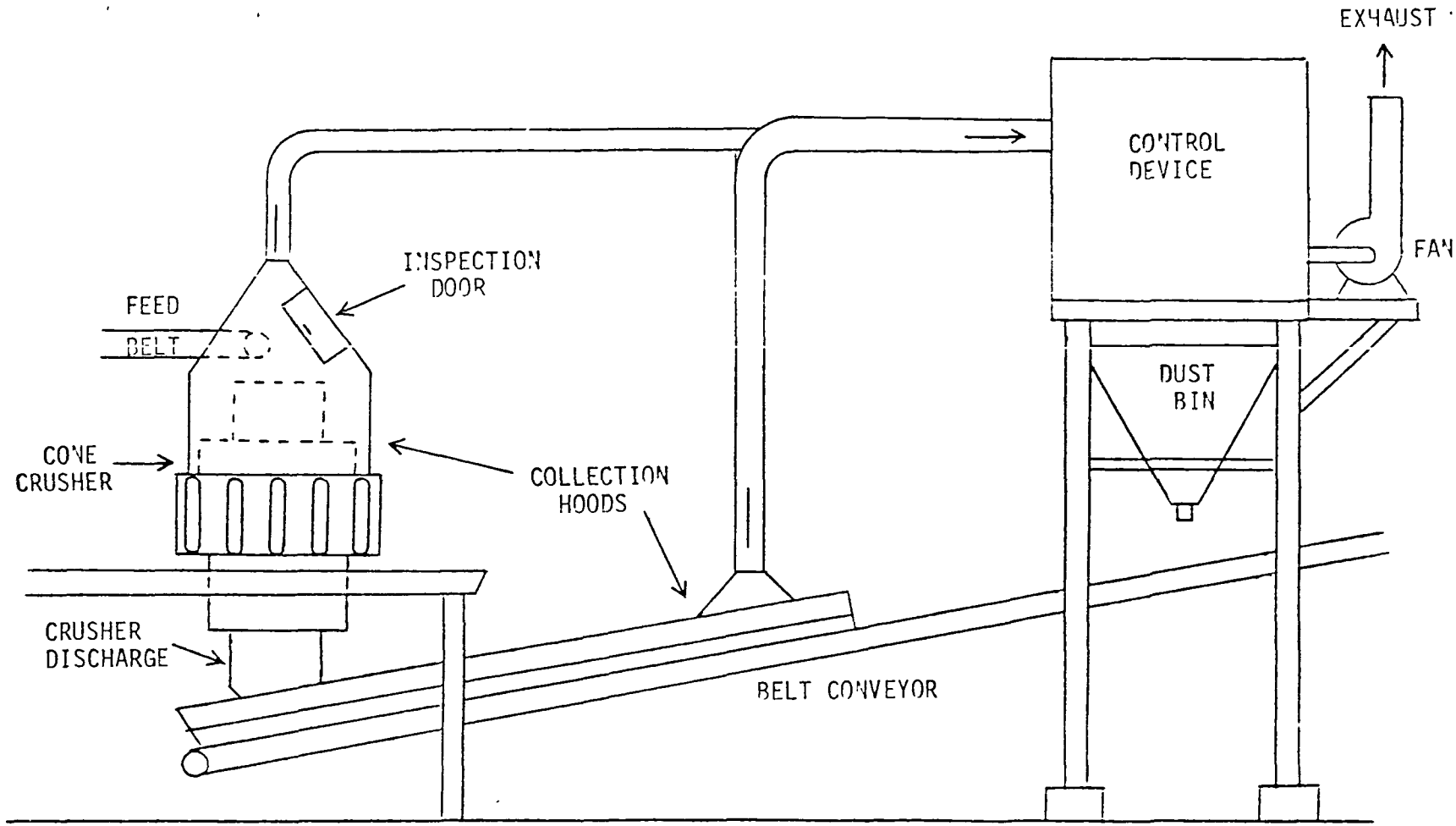

Figure 3-7. Hood configuration used to control a cone crusher.

filling operation and vent system is shown in Figure 3-8.

3.2.2.2 Collection Devices - The most effective dust collection device in the mineral industry is the fabric filter or baghouse. For most crushing plant applications, mechanical shaker type collectors which require periodic shutdown for cleaning (after four or five hours of operation) are used. These units are normally equipped with cotton sateen bags and operated at an air to cloth ratio of 2 or 3 to 1. A cleaning cycle usually requires no more than two to three minutes of bag shaking and is normally actuated automatically when the exhaust fan is turned off.

For applications where it may be impractical to turn off the collector, fabric filters with continuous cleaning are employed. Although compartmented mechanical shaker types may be used, jet pulse units are preferred. These units usually use wool or synthetic felted bags for a filtering media and may be operated at a filtering ratio of as high as 6 or 10 to 1. Regardless of the baghouse type used, jet pulse or shaker, greater than 99 percent efficiency can be attained even on submicron particle sizes.[22] Outlet grain loadings recorded during EPA emission tests at a number of crushed stone facilities processing a variety of rock types seldom exceeded 0.02 grams/Nm^3 (0.01 gr/dscf).[23] These crushed stone operations are similar to those encountered in these non-metallic minerals.

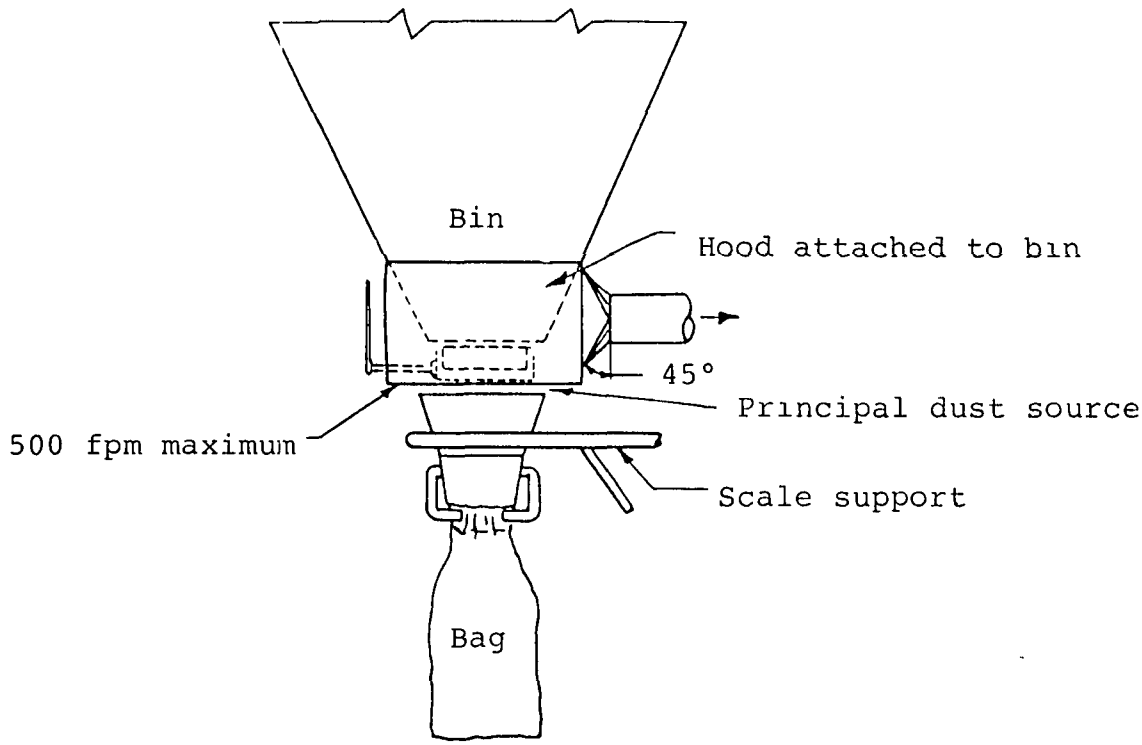

Figure 3-8. Bag filling vent system.[21]

Other collection devices used in the industry include cyclones and low energy scrubbers. Although these collectors may demonstrate high efficiencies, 95 to 99 percent, for coarse particles (40 microns and larger). Their efficiencies are poor, less than 85 percent, for medium and fine particles (20 microns and smaller).[22] Although high energy scrubbers and electrostatic precipitators could conceivably achieve results similar to that of a fabric filter, there is no indication that these methods are used to control dust emissions in the industry.

3.2.3 Combination Systems

Wet dust suppression and dry collection techniques are often used in combination to control particulate emissions from crushing plant facilities. As illustrated in Figure 3-9, wet dust suppression techniques are generally used to prevent emissions at the primary crushing stage and at subsequent screens, transfer points and crusher inlets. Dry collection is generally used to control emissions at the discharge of the secondary and tertiary crushers where new dry surfaces and fine particulates are formed. In addition to controlling emissions, dry collection results in the removal of a large portion of the fine particulates generated with the resultant effect of making subsequent dust

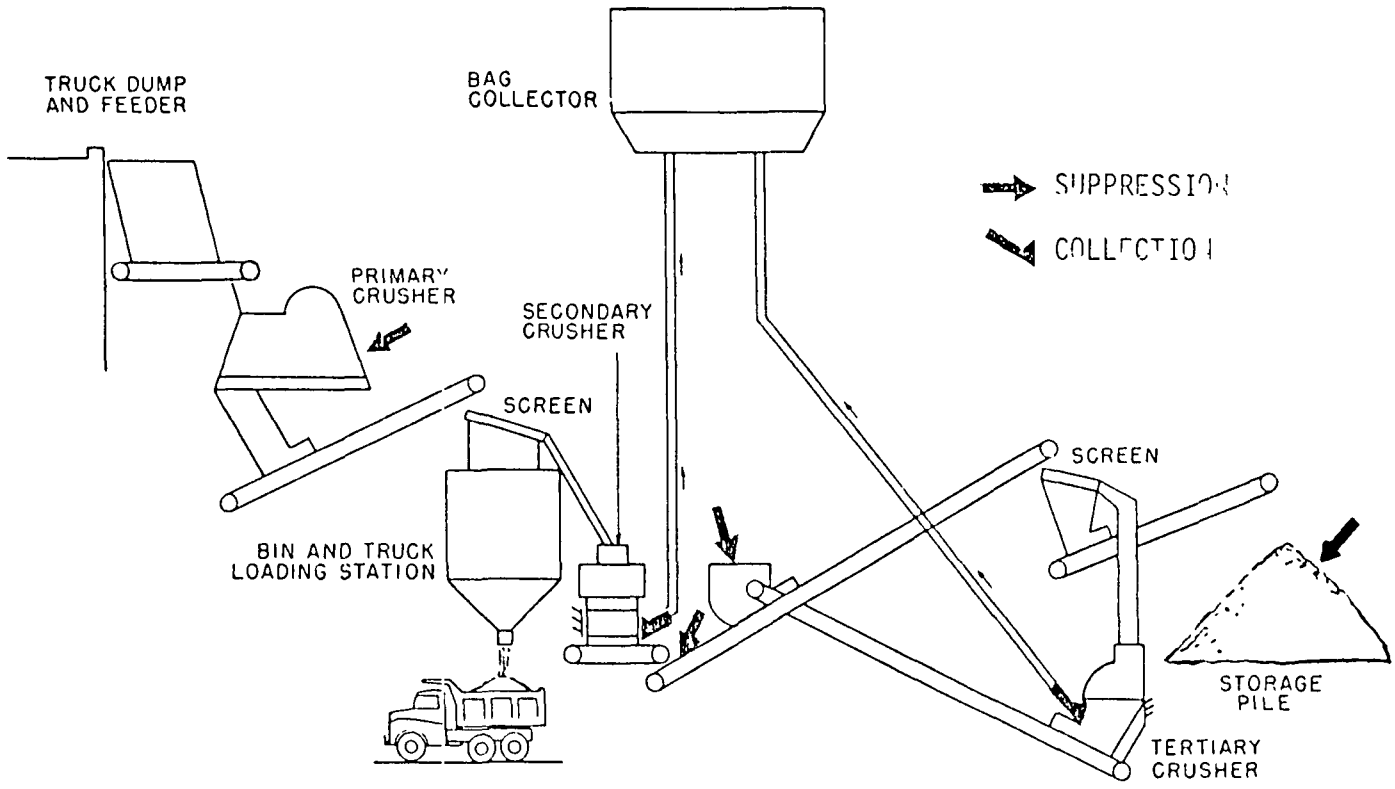

Figure 3-9. Combination dust control systems.

suppression applications more effective with a minimum of added moisture. Depending on the production requirements, dry collection may also be necessary at the finishing screens.

3.2.4 Control of Portable Plants

Dust control at portable crushing plants is considered by some industry spokesmen to be difficult since utilities such as electricity and water are limited, and the amount of equipment that can be transported from location to location is limited. The successful application of a wet dust suppression system has, however, been reported.[24] Furthermore, trailer mounted portable baghouse units are presently commercially available and have been utilized to control emissions from portable asphalt concrete batch plants. Although the application of dry collection systems at portable crushing plants is not widespread, portable plant equipment manufacturers have indicated, unofficially, that this control option is indeed feasible and that the required hoods, enclosures and ductwork could be integrated into the design of the portable plant components. In fact, at least one manufacturer has drafted a proposal for such an installation.[25]

3.3 CONTROL OF FUGITIVE DUST SOURCES

Fugitive dust emissions constitute a large portion of

the non-metallic mineral industry's emission problem. Control measures used to reduce fugitive dust emissions from quarrying operations have already been discussed in Section 3.1. Application of the control methods described in Section 3.2 will reduce emissions from contained sources. A review of the control measures applied to open sources is presented in this section.

3.3.1 Control of Aggregate Storage Piles

Aggregate stockpiles are a significant source of fugitive dust. Emissions may result both during the actual formation of stockpiles and from wind erosion of existing piles. During the formation of stockpiles by stacking conveyors, particulate emissions are generated as a result of wind blowing across a stream of falling material, causing the segregation of fine form coarse particles, and as a result of falling product impacting on the pile. Control methods include wet dust suppression and devices designed to minimize the free-fall distance to which the material is subjected, thus lessening its exposure to wind and reducing its impact.

Control devices which may be employed include stone ladders, telescoping chutes and hinged-boom stacker conveyors. A stone ladder simply consists of a section of vertical pipe into which material from the stacking conveyor is discharged. The pipe is provided with square or rec-

tangular openings at different levels through which the material may flow. This reduces the free fall distance and affords wind protection. Another approach is the telescoping chute. Material is discharged to a retractable chute and falls freely to the top of the pile. As the height of the stockpile increases or decreases, the chute is gradually raised or lowered accordingly. A similar approach is the use of a stacker conveyor equipped with an adjustable hinged boom which can be used to raise or lower the conveyor according to the height of the stockpile.

An alternative approach is the application of wet dust suppression techniques. Water sprays located at the stacking conveyor discharge pulley can be used to wet the product and, consequently, suppress emissions. For very fine products such as stone sand a pug mill may be used to eliminate particulate emissions by mixing the product with water prior to stockpiling. If a finely ground product cannot be wetted, it should be stored in silos prior to shipping.

The most commonly used technique for controlling windblown emissions from active stockpiles is to wet them down. A water truck equipped with a hose or other spray device may be used. One operator uses spray towers in the stockpile areas. The towers are equipped with spray nozzles capable of spraying water at 1900 liters (500 gallons) per

minute in a continuous circle with a 61 meter (200 foot) radius. Only three passes are required to effectively wet down a pile.[2]

The location of stockpiles behind natural or manufactured wind breaks will also aid in reducing windblown dust. In addition, the working side of active piles should be located on the leeward side of the pile. For very fine materials, however, or for materials which must be stored dry, the use of suitable stockpile enclosures or silos is the only effective means of control, regardless of load-out problems they may create.

For storage piles which are inactive for long periods of time and for permanent waste piles or spoil banks, the application of soil stabilizers, consisting of petroleum or synthetic resins in emulsion, have been somewhat effective. These chemical binders cause the topmost particles to adhere to one another, forming a durable wind and rain resistant surface crust. As long as this surface crust remains intact, the stockpile is protected from wind erosion.

3.3.2 Control of Conveying Operations

Conveying operations may result in fugitive dust emissions in addition to the emissions generated at transfer points. These emissions may be either mechanically induced or windblown.

Control alternatives include dust suppression and covering. As noted in Section 3.2.1, a carryover, dust-proofing effect will result from wet dust suppression applications. It is unlikely, however, that this carryover effect is sufficient to afford effective control during periods of high wind and low humidity or for handling fine materials. Ultimately, the most effective measure is to cover open conveyors. Covers provide protection from wind and prevent airborne particles. In addition to dust control, covered conveyors also yield certain operating benefits. They increase a plant's capability to operate during periods of inclement weather by reducing the potential for mud cake buildup on belts, which can result in damage to conveyors and hazardous operating conditions; screen blinding; and the production of non-specification products due to the retention of fines.

3.3.3 Control of Load Out Operations

The transfer of fine materials from stockpiles or storage bins into open dump trucks generates fugitive dust emissions. These emissions can be reduced by dust suppression and by reducing the free fall height of material being transferred as described in Section 3.2.2. Loader operators may also contribute to the prevention of dust formation by placing buckets as close to truck beds as possible before dumping.

At some installations, water spray systems are used to suppress particulate emissions and also wet the material in the truck when loading out of bins. In addition, enclosing the area under the bins as much as practicable will reduce the potential for windblown emissions. Exhaust systems using canopy-type hoods such as those used at dry-concrete-batch plants, are not widely used in the non-metallic minerals industry. Operators contend that such a system would be impractical because of the variability in the bed size of the trucks loaded. Attempts to ventilate the entire bin load out area have been ineffective due to the large air volumes required.

3.3.4 Control of Yard and Other Open Areas

Fugitive dust emissions from plant yard areas are generated as a result of vehicle traffic and wind. In general, control of these areas consists of simply maintaining good housekeeping practices. Spillage and other potential dust sources should be cleaned up. For paved or other smooth yard surfaces, the use of street sweeping equipment such as brush type and vacuum type sweepers has been effective. For interplant roads, subject to high traffic volume, the same control measures utilized on quarry haul roads can be used as described in Section 3.1. For large open areas and overburden piles, treatment with soil stabilizers and the planting of vegetation offer viable

control options. Many chemical stabilizers presently on the market actually promote the emergence and growth of vegetation and offer effective control against rain and wind erosion.[26]

3.4 FACTORS AFFECTING THE PERFORMANCE OF CONTROL SYSTEMS

3.4.1 Dust Suppression

There are a number of factors which may affect the performance of a wet dust suppression system. These include wetting agent used, the method of application, characteristics of the process of flow, and the type and size of the process equipment serviced. The number, type and configuration of spray nozzles at an application point, as well as the speed at which a material stream moves past an application point, may affect both the efficiency and uniformity of wetting. In addition, meteorological factors, such as wind, ambient temperature and humidity, which affect the evaporation rate of added moisture, may also adversely affect the overall performance of a dust suppression system. Where the material processed contains a high percentage of fines, such as the product from a hammermill, dust suppression applications may be totally inadequate because of the enormous surface areas to be treated.

3.4.2 Dry Collection

For dry collection systems, factors affecting both capture and collection efficiency are important. Wind

blowing through hood openings can almost nullify the effectiveness of a local exhaust system. This can be appreciated when one considers that an indraft velocity of 61 meters/min (200 fpm) is equivalent to less than 3.7 km/hr (2.3 mph). Consequently, it may be necessary to house process equipment in buildings or structures at installations subject to high prevailing winds. Except for sand and gravel plants, much of the processing in these industries occurs in buildings which enclose the equipment.

An exhaust system must be properly maintained and balanced if it is to remain effective. Good practice dictates that systems be periodically inspected and capture and conveying velocities checked against design specifications to assure that the system is indeed functioning properly. The primary causes for systems becoming unbalanced are the presence of leaks resulting from wear due to abrasion or corrosion and the settling of dust in poorly designed duct runs which effectively reduce the cross sectional area of the duct and increase pressure drop.

Fabric filters and to a lesser extent cyclone type collectors can be used to capture dust. An important factor affecting the performance of a baghouse is bag cleaning. Too frequent or too severe a cleaning action results in excessive bag wear and the formation of leaks. In addition,

overcleaning may prevent the formation of an adequate filter cake and thus lower collection efficiency. Inadequate cleaning may cause fabric filters to blind resulting in excessively high pressure drops. The importance of following manufacturers recommended operating and maintenance procedures cannot be overstressed.

Data gathered during emission tests on 12 baghouse units used to control a variety of process facilities at seven crushed stone installations processing a variety of rock types, including limestone, traprock and cement rock, indicate that the size distribution of particulates collected, the rock type processed, and the facility controlled does not substantially affect baghouse performance.[23]

Cyclone type collectors, though less effective than fabric filters, may also be used to reduce emissions. Care must be taken to insure that the cyclone cone does not become plugged and that the inlet sections do not erode away from the abrasive dust particles.

3.4.3 Wet Collection

Spray chambers and venturi type scrubbers can be used to reduce particulate emissions. Water from these systems can generally be clarified and recirculated. Purge streams from the water circulation system can be used in dust suppression systems.

3.4.4 Combined Suppression and Collection Systems

The factors effecting the performance of combination systems are identical to those encountered where dust suppression or dry collection systems are used alone.

REFERENCES FOR CHAPTER 3

1. "Dust Control in Mining, Tunneling and Quarrying in the United States, 1961 through 1976," Bureau of Mines information circular, No. IC8407, March 196, pp. 11-12.

2. Minnick, J. L., "Control of Particulate Emissions from Lime Plants - A Survey," Journal of the Air Pollution Control Association, Volume 21., No. 4, April 1971, p. 198-199.

3. Chiaro, D. A., "Significant Operating Benefits Reported from Cement Quarry Dust Control Program," Pit and Quarry, January 1971.

4. "Conrock Controls Fugitive Dust Efficiently and Economically," Pit and Quarry, September 1972, pp. 127-128.

5. "Investigation of Fugitive Dust Volume I - Sources, Emissions and Control," prepared by PEDCo Environmental Specialists, Inc., for the Environmental Protection Agency, Contract No. 68-02-0044, Task 9, June 1974, p. 4-29.

6. Ibid., p. 4-22.

7. "Rock Products Reference File - Dust Suppression," Rock Products, May 1972, p. 156.

8. Weant, G. E., "Characterization of Particulate Emissions from the Stone-Processing Industry," prepared by Research Triangle Institute for the United States Environmental Protection Agency, Contract No. 68-02-0607-10, May 1975, p. 64.

9. Johnson-March Corporation, Product Literature on Chem-Jet Dust Suppression System, 1971.

10. Courtesy of Johnson-March Corporation.

11. Reference 8.

12. Hankin, M., "Is Dust the Stone Industry's Next Major Problem," Rock Products, April 1967, p. 84.

13. Ibid., p. 114.

14. Anderson, D. M., "Dust Control Design by the Air Induction Technique," Industrial Medicine and Surgery, February 1964, p. 3.

15. American Conference of Governmental Industrial Hygienists, "Industrial Ventilation, A Manual of Recommended Practice," 11th Edition, 1970, p. 5-32.

16. Ibid. pg. 5-33.

17. Ibid. p. 5-31.

18. Ibid. p. 5-34.

19. Reference 14, p. 2.

20. Telephone conversation between Mr. Alfred Vervaert, EPA, and Mr. Joel McCorkel, Aggregates Equipment Incorporated, January 28, 1975.

21. American Conference of Governmental Industrial Hygienists, "Industrial Ventilation, A Manual of Recommended Practice," 11th Edition, 1970, p. 5-28.

22. "Control Techniques for Particulate Air Pollutants," U.S. Environmental Protection Agency, Publication No. AP-51, January 1969, pp. 46-47.

23. An Investigation of the Best Systems of Emission Reduction for Quarrying and Plant Process Facilities in the Crushed and Broken Stone Industry. United States Environmental Protection Agency, Office of Air Quality Planning and Standards, Emission Standards and Engineering Division, Research Triangle Park, North Carolina 27711. Draft. April, 1976.

24. Greesaman, J., "Stone Producer Wins Neighbors' Acceptance," Roads and Streets, July 1970.

25. Telephone Communication between Mr. Alfred Vervaert EPA and a representative from Iowa Manufacturing Co., Cedar Rapids, Iowa, March 5, 1974.

26. Armbrust, D. V. and Dickerson, J. D., "Temporary Wind Erosion Control: Cost and Effectiveness of 34 Commercial Materials," Journal of Soil and Water Conservation, July - August, 1971, p. 154.

4.0 STATE AND LOCAL AIR POLLUTION CONTROL REGULATIONS

To determine the impact of New Source Performance Standards (NSPS), the emissions under state regulations must be determined. The regulations applicable to particulate emissions in each state from industrial processes are summarized in Table 4-1. The column labelled "process weight equation" indicates the equation or pair of equations defining the maximum allowable emissions in each state where available. Where equations are not available, tables have been provided to show maximum allowable emissions (Tables 4-2 through 4-6). The process weight used in the regulations is interpreted as being for the entire plant rather than each piece of equipment. This agrees with the interpretation used by many states and is also the more restrictive application, resulting in a conservative evaluation of the NSPS impact. The Table 4-1 column labelled "concentration, grains/scf" indicates the maximum allowable concentration of particulate in grains per standard cubic foot. The column labelled "opacity" indicates the maximum allowable visible emission from industrial processes. In most states the opacity is 20 percent, or equivalent to Ringelmann No. 1.

Table 4-1. INDUSTRIAL PROCESS PARTICULATE EMISSIONS REGULATIONS BY STATE

State	Process weight equation	Concentration grains/scf	Opacity	Comments
Alabama	a		20	Class 1 counties
	b		20	Class 2 counties
Alaska		0.1	20	Existing source
		0.05	20	New source - July 1, 1972
Arizona	b		40	
Arkansas	a		20	
California				Each county has own regulations
Bay Area	c	0.15	20	
Kern County	a	0.1 - 0.2	20	Valley Basin - Desert Basin
Los Angeles		0.3	20	Existing source - see Table 4-2
			20	New source - January 1, 1973 - Table 4-3
Colorado	a		20	
Connecticut	a		20	
Delaware		0.2	20	
District of Columbia	b (1)		20	Existing source - see Table 4-2
		0.03	20	New source - January 17, 1972
Florida	a		20	
Georgia	c		10	Existing source
	b		10	New source - July 2, 1968
Hawaii	c		20	
Idaho	b		20	
Illinois	b		30	Existing source
	d		30	New source - December 31, 1972
Indiana	b		40	
Iowa	b		40	
Kansas	b		40	
Kentucky	b	0.02	40	
Louisiana	b		20	
Maine	a		40	
Maryland			20	Same as District of Columbia
Massachusetts	e		20	Existing source
	f		20	New source - June 1, 1972
	f		20	Existing in critical regions
Michigan	b		20	
Minnesota	b	0.3	20	
Mississippi	c		40	
Missouri	b		20	
Montana	b		20	
Nebraska	b		20	
Nevada	b		20	
New Hampshire	g		20	Existing source
	b		20	New source - April 1, 1972
New Jersey			20	See Table 4-4
New Mexico		690 $\mu g/m^3$	20	Exhaust gas concentrations - Gypsum
			20	See Table 4-5 Pumice, Mica, Perlite
New York		0.3 lb/1000 lb	20	Existing source
		0.05	20	New source - July 1, 1973
North Carolina	b		20	
North Dakota	b		20	
Ohio	b		20	
Oklahoma	b		20	
Oregon	e	0.2	20	Existing source
		0.1	20	New source - February 15, 1972

Table 4-1 (Continued). INDUSTRIAL PROCESS

PARTICULATE EMISSIONS REGULATIONS BY STATE

State	Process weight equation	Concentration grains/scf	Opacity	Comments
Pennsylvania	h	0.02	60	
Puerto Rico	b		20	
Rhode Island	b		20	
South Carolina	b		20	
South Dakota	b		20	
Tennessee	b		20	Existing source
	a		20	New source - August 9, 1969
Texas	i		20	
Utah			20	85% controlled or opacity laws
Vermont			60	See Table 4-2
Virginia	b		20	AQCR 1-6
			20	AQCR 7 - See Table
Washington		0.2	40	Existing source
		0.1	40	New source - February 2, 1972
West Virginia			20	See Table 4-6
Wisconsin	a		20	
Wyoming	b		20	Existing source
	a		20	New source - April 9, 1973

Process weight equation	Less than 30 tons/hr*	Greater than 30 tons/hr*
a	$E = 3.59\ P^{0.62}$	$E = 17.31\ P^{0.16}$
b	$E = 4.1\ P^{0.67}$	$E = 55.0\ P^{0.11} - 40$
c	$E = 4.1\ P^{0.67}$	(Same as less than 30 tons/hr)
d	$E = 2.54\ P^{0.534}$ ***	$E = 24.8\ P^{0.16}$
e	$E = 55.0\ P^{0.11} - 40$	(Same as less than 30 tons/hr)
f	$E = 1/2\ (55.0\ P^{0.11} - 40)$	(Same as less than 30 tons/hr)
g	$E = 5.05\ P^{0.67}$	$E = 66.0\ P^{0.11} - 48$
h	$E = 0.76\ P^{0.42}$ **	(Same as less than 30 tons/hr)
i	$E = 3.12\ P^{0.985}$ ****	$E = 25.4\ P^{0.287}$

* E units of lbs/hr, P units of tons/hr, except as noted.
** E units of lbs/hr, P units of lbs/hr.
*** Less than 450 tons/hr.
**** Less than 20 tons/hr.
(1) Greater than 30 tons/hr only.

Table 4-2. MAXIMUM ALLOWABLE EMISSIONS FROM INDUSTRIAL PROCESSES FOR EXISTING SOURCES IN LOS ANGELES, DISTRICT OF COLUMBIA, AND MARYLAND, AND ALL SOURCES IN VERMONT*

Process weight per hour in pounds	Maximum weight of particulate discharge per hours in pounds	Process weight per hour in pounds	Maximum weight or particulate discharge per hours in pounds
50	0.24	3400	5.44
100	0.46	3500	5.52
150	0.66	3600	5.61
200	0.85	3700	5.69
250	1.03	3800	5.77
300	1.20	3900	5.85
350	1.35	4000	5.93
400	1.50	4100	6.01
450	1.63	4200	6.08
500	1.77	4300	6.15
550	1.89	4400	6.22
600	2.01	4500	6.30
650	2.12	4600	6.37
700	2.24	4700	6.45
750	2.34	4800	6.52
800	2.43	4900	6.60
850	2.53	5000	6.67
900	2.62	5500	7.03
950	2.72	6000	7.37
1000	2.80	6500	7.71
1100	2.97	7000	8.05
1200	3.12	7500	8.39
1300	3.26	8000	8.71
1400	3.40	8500	9.03
1500	3.54	9000	9.36
1600	3.66	9500	9.67
1700	3.79	10000	10.0
1800	3.91	11000	10.63
1900	4.03	12000	11.28
2000	4.14	13000	11.89
2100	4.24	14000	12.50
2200	4.34	15000	13.13
2300	4.44	16000	13.74
2400	4.55	17000	14.36
2500	4.64	18000	14.97
2600	4.76	19000	15.58
2700	4.84	20000	16.19
2800	4.92	30000	22.22
2900	5.02	40000	28.3
3000	5.10	50000	34.3
3100	5.18	60000	40.0
3200	5.27	or	
3300	5.36	more	

Where the process weight per hour falls between two values in the table, the maximum weight per hour shall be determined by linear interpolation.

* This table is applicable in the District of Columbia and Maryland up to 60,000 lbs/hr only.

Table 4-3. MAXIMUM ALLOWABLE EMISSIONS FROM INDUSTRIAL PROCESSES FOR NEW SOURCES IN LOS ANGELES

Process weight per hour, pounds per hour	Maximum discharge rate allowed for solid particulate matter, pounds per hour[a]	Process weight per hour, pounds per hour	Maximum discharge rate allowed for solid particulate matter, pounds per hour[a]
250 or less	1.10	12000	10.4
300	1.12	14000	10.8
350	1.23	16000	11.2
400	1.34	18000	11.5
450	1.44	20000	11.8
500	1.54	25000	12.4
600	1.73	30000	13.0
700	1.90	35000	13.5
800	2.07	40000	13.9
900	2.22	45000	14.3
1000	2.38	50000	14.7
1200	2.66	60000	15.3
1400	2.93	70000	15.9
1600	3.19	80000	16.4
1800	3.43	90000	16.9
2000	3.66	100000	17.3
2500	4.21	120000	18.1
3000	4.72	140000	18.8
3500	5.19	160000	19.4
4000	5.64	180000	19.9
4500	6.07	200000	20.4
5000	6.49	250000	21.6
5500	6.89	300000	22.5
6000	7.27	350000	23.4
6500	7.64	400000	24.1
7000	8.00	450000	24.8
7500	8.36	500000	25.4
8000	8.70	600000	26.6
8500	9.04	700000	27.6
9000	9.36	800000	28.4
9500	9.68	900000	29.3
10000	10.00	1000000 or more	30.0

[a] Aggregate discharged from all points of process.

Table 4-4. MAXIMUM ALLOWABLE EMISSION RATE FROM INDUSTRIAL PROCESSES IN NEW JERSEY

1	2	3	4
Potential emission rate from source operation lb/hr	Allowable emission rate (lb/hr) (Based on 99% efficiency of collection)	Source gas emitted for source oper. (scfm)	Allowable emission rate (lb/hr) (Based on 0.02 grains per SCF)
50 or less	0.5	3,000 or less	0.5
100	1.0	6,000	1.0
1000	10.0	35,000	6.0
2000	20.0	70,000	12.0
3000 or greater	30.0	140,000	24.0
		175,000 or greater	30.0

Note:

1. From columns 1 and 2 above, determine the allowable emission rate based upon the potential emission rate of solid particles from the source operation.
2. From columns 3 and 4 above, determine the allowable emission rate based upon the source gas emitted from the source operation. Whenever dilution gas is, for any purpose, added to the source gas from a source operation, the source gas emitted shall be considered to be the gas discharge rate prior to such dilution.
3. The greater of the two emission rates as determined from 1 and 2 above shall be the maximum allowable emission rate. For rates between any two consecutive values stated in columns 1 and 3, the corresponding allowable emission rates shall be as determined by interpolation.

Table 4-5. MAXIMUM ALLOWABLE EMISSIONS FROM PUMICE, MICA, AND PERLITE PROCESSES IN NEW MEXICO

Process rate, pounds per hour	Maximum stack emission rate, pounds per hour
10,000	10
20,000	15
30,000	22
40,000	28
50,000	31
100,000	33
200,000	37
300,000	40
400,000	43
500,000	47
600,000 and above	50

Table 4-6. MAXIMUM ALLOWABLE EMISSIONS FROM INDUSTRIAL PROCESSES IN WEST VIRGINIA

Process weight rate in pounds per hour	Emission rate in pounds per hour
0	0
2,500	3
5,000	5
10,000	10
20,000	16
30,000	22
40,000	28
50,000	31
100,000	33
200,000	37
300,000	40
400,000	43
500,000	47
600,000	50
700,000	50
800,000	50
900,000	50
1,800,000 and above	50

Process weight equation (b) is by far the most predominant of those presented in Table 4-1. Note also that equation (c) is the same as equation (b) for rates less than 30 tons per hour, and is extended to include rates greater than 30 tons per hour.

5.0 ESTIMATED NEW SOURCE PERFORMANCE STANDARD EMISSION REDUCTIONS

5.1 NEW SOURCE PERFORMANCE STANDARD (NSPS) ANALYSIS METHOD

To determine the potential impact of NSPS on these industries, calculations were performed using a method known as Model IV,[1,2] which mathematically expresses the differential in atmospheric emissions that could be expected by 1985 with and without NSPS.

Estimated growth and obsolescence rates over a ten year period were applied to baseline year (1975) industry capacities to obtain the new and modified capacity that could be regulated by NSPS in the period 1975 to 1985. Emission levels in 1985, which represent maximum allowable values based on production, were then calculated by applying 1) control levels stipulated by the current state regulations, and 2) new source performance standards recommended by EPA.[3] The difference between these two emission levels represents the emission impact of NSPS for a specific industry.

From Reference 2, the equations used to determine the impact of NSPS are:

$$T_s = (A-B)\ K\ E_s + (B+C)\ K\ E_s \quad (1)$$

$$T_n = (A-B)\ K\ E_s + (B+C)\ K\ E_n \quad (2)$$

where:

T_s = total emissions in the ith year under regulations (tons/year).

T_n = total emissions in the ith year under NSPS promulgated in the baseline year (tons/ year).

A = baseline year industrial capacity (production units/year).

B = capacity needed to maintain baseline year capacity due to replacement of depreciated equipment or facilities (production units/year).

C = capacity increase over baseline year capacity due to the construction of new equipment or facilities to accomodate growth (production units/year).

K = normal fractional utilization rate of baseline year capacity assumed constant during entire time interval. (capacity) x (fractional utilization) = production.

E_s = allowable emission rate under current state regulations (mass/unit capacity).

E_n = allowable emission rate under NSPS (mass/unit capacity).

The quantity (A-B) indicates the existing capacity in the ith year not subject to NSPS. The quantity (B+C) indicates the capacity due to replacement and new construction which is subject to the current state regulations in equation (1) and NSPS in equation (2). The difference between the two equations, T_s-T_n, is given by:

$$T_s - T_n = (K)\ (E_s - E_n)\ (B+C) \quad (3)$$

and reflects the control effectiveness of NSPS over the existing state regulations for a specific industry.

The values of B and C for equations 1, 2, and 3 are determined as follows:

If replacement, reconstruction, and new construction is determined to occur at a compounded growth rate

$$B = A\ [(1 + P_b)^i - 1] \quad (4)$$

$$C = A\ [(1 + P_c)^i - 1] \quad (5)$$

If a simple growth rate is found

$$B = A\ i\ P_b \quad (6)$$

$$C = A\ i\ P_c \quad (7)$$

The variable (i) is the elapsed time in years (i = 10 for this study). The variable (P_b) is defined as the average rate at which depreciated equipment or facilities are replaced during the time period 1975 to 1985. It is expressed as a fraction and is applied to the baseline year capacity, A, to determine B. This is the value of B to which NSPS can be applied.

The variable (P_c) is defined as the average anticipated growth rate in industrial capacity during the period 1975 to 1985. It is also expressed as a fraction and is applied to A to determine C. NSPS are applied to this value of C.

A few modifications have been made to this model for applications in this report. It is believed that these

modifications provide a better representation of the effectiveness of NSPS.

The emission rate variable, E_u, is defined as the uncontrolled emission rate (mass/unit capacity). Emissions under current state regulations, E_s, is compared to E_u and the smaller value is used in place of the variable E_s in equations (1) and (2). In most cases E_s will be less than E_u. However, in the rare situation where E_u is less than E_s (such as for the sand and gravel industry), total emissions cannot exceed those produced at an uncontrolled emission rate and therefore, should not be calculated based on the state allowable emission rate. Thus, E_s is replaced by E_u in order to calculate emissions in the ith year not subject to NSPS when E_u is less than E_s.

Also, the NSPS emission rate, E_n, is compared to the two rates previously compared (E_u and E_s), and the smallest value is used in place of the variable E_n in equation (2). In most cases E_n will be the smallest value (such is the case in this study). However, in contrary situations 1) total emissions cannot exceed those produced at an uncontrolled emission rate should E_u be less than E_n, and 2) allowable emissions will already be limited by current state regulations should E_s be less than E_n. Thus, NSPS will not apply to those industries which are already subject to more

stringent regulations or limitations. In these situations, therefore, T_s will be equal to T_n and the NSPS will have no affect.

The NSPS should not allow more emissions than the current state regulations. Therefore, the quantity (T_s-T_n) should never be negative. For this to be true each of the three terms on the right side of equation (3) must be positive. The first term, the fractional utilization, K, is always a positive decimal between zero and unity. From the previous discussion of the modifications on E_s and E_n, the second term (E_s-E_n) is always greater than or equal to zero. The third term (B+C) represents the capacity subject to NSPS, and, therefore, it also should never become negative. The variable, B, will always be positive since facilities will always depreciate. However, the variable, C, will be negative for industries whose capacities are decreasing from that of the baseline year. These industries overall are declining rather than expanding. If the term (B+C) is negative, the industry capacity is declining faster than facilities are depreciating. Therefore, there will be no capacity subject to NSPS, and (T_s-T_n) should equal zero.

5.2 INPUT VARIABLES FOR NSPS EMISSION IMPACT DETERMINATION

The data necessary when determining the NSPS impact by Model IV are: 1975 production capacity, fraction utiliza-

tion of capacity, industry growth (or decrease) in production capacity, equipment depreciation rate, uncontrolled emission factor, allowable emissions under state regulations, and allowable emissions under NSPS. These are summarized in Tables 1-1 and 5-1.

5.2.1 Model Plant Process Weight

A model plant for each mineral industry was necessary in order to determine the typical control device flow rates and allowable emissions under state regulations.

To find the model plant size, actual plant capacities were determined for as many plants as in each industry as were readily available. References used included the International Directory of Mining and Mineral Processing Operations[4], National Emissions Data System (NEDS)[5], Industrial Minerals and Rocks,[6] Minerals Facts and Problems[7], and Mineral Yearbook[8]. In addition, plant capacities obtained during plant visits and from trade associations were considered. Also, an "average" plant size was calculated using total industry production, the number of plants, and an assumed 6720 hr/yr of operation. With this information, a model plant size was determined. These are shown in Table 5-1 and the calculations are summarized in Appendix B.

5.2.2 Uncontrolled Emissions

Uncontrolled emission rates for the various processes in the non-metallic minerals industry were obtained directly

Table 5-1. TYPICAL NON-METALLIC MINERAL PROCESSING FACILITIES

Mineral	Dry processes (excluding dryers and heating steps)	Model plant process weight,		Uncontrolled emission factor,		Control device flow rate,		Allowable emissions NSPS,		State,	
		MT/hr	ton/hr	kg/MT	lb/ton	Nm^3/min	scfm	kg/MT	lb/ton	kg/MT	lb/ton
Barite	Primary crushing (jaw)	14	15	0.25	0.5	10.6	375				
	Screening/Conveying/ Handling			1.0	2.0	210.1	7,425				
	Total			1.25	2.5	220.7	7,800	0.049	0.098	0.82	1.64
Borates	Primary Crushing (Hammermill)	381	420	0.75	1.5						
	Secondary Crushing (Hammermill)			0.75	1.5						
	Tertiary Crushing (Hammermill)			3.0	6.0						
	Screening/Conveying Handling			1.0	2.0						
	Total			5.5	11.0	1754	62,000	0.014	0.028	0.054	0.108
Clay	Primary Crushing (Jaw)	27	30			10.6	375				
	Secondary Crushing (Cyrotory)					37.5	1,325				
	Tertiary Crushing (Hammermill)					29.7	1,050				
	Screening/Conveying/ Handling					362.9	12,825				
	Total			55	110	440.7	15,575	0.049	0.098	0.67	1.34
Diatomite	Primary crushing (Hammermill)	18	20	0.75	1.5	24.1	850				
	Screening/Conveying/ Handling			1.00	2.0	193.1	6,825				
	Total			1.75	3.5	217.2	7,675	0.036	0.072	0.44	0.88
Feldspar	Primary Crushing (Jaw)	18	20	0.25	0.5	10.6	375				
	Secondary Crushing (Gyrotory)			0.75	1.5	37.5	1,325				
	Tertiary Crushing (Ball mill)			3.0	6.0	65.1	2,300				
	Screening/Conveying/ Handling			1.0	2.0	324.7	11,475				
	Total			5.0	10.0	437.9	15,475	0.073	0.146	0.71	1.42
Gypsum	Primary Crushing (Gyrotory)	23	25	0.50	1.0	37.5	1,325				
	Secondary Crushing (cone)			0.75	1.5	37.5	1,325				
	Tertiary Crushing (rollermill)			3.0	6.0	35.4	1,250				
	Screening/Conveying/ Handling			1.0	2.0	346.0	12,225				
	Total			5.25	10.5	456.4	16,125	0.061	0.122	0.71	1.42

Table 5-1 (continued). TYPICAL NON-METALLIC MINERAL PROCESSING FACILITIES

Mineral	Dry processes (excluding dryers and heating steps)	Model plant process weight, MT/hr	Model plant process weight, ton/hr	Uncontrolled emission factor, kg/MT	Uncontrolled emission factor, lb/ton	Control device flow rate, Nm^3/min	Control device flow rate, scfm	Allowable emissions NSPS, kg/MT	Allowable emissions NSPS, lb/ton	Allowable emissions state, kg/MT	Allowable emissions state, lb/ton
Lightweight aggregate											
a) Perlite	Primary Crushing (Jaw)	27	30	0.25	0.5	10.6	375				
	Tertiary Crushing			3.0	6.0	80.7	2,850				
	(Ball or rod mill) Screening/Conveying/			3.0	6.0	80.7	2,850				
	Handling			1.0	2.0	296 4	10,475				
	Total			4.25	8.5	387.7	13,700	0.043	0.086	0.520	1.04
b) Slag	Primary Crushing (Jaw)	272	300	0.25	0.5						
	Secondard Crushing (Jaw) Screening/Conveying/			0.75	1.5						
	Handling			1.0	2.0						
	Total			2.0	4.0	1,344	47,500	0.015	0.030	0.083	0.166
c) Vermiculite	Primary Crushing (Hammermill)	68	75	0.25	0.5	97.6	3,450				
	Screening/Conveying/ Handling			1.0	2.0	283.7	10,075				
	Total			1.25	2.5	381.3	13,475	0.017	0.034	0.323	0.646
Pumice	Primary Crushing (Jaw)	9	10	0.25	0.5	10.6	375				
	Secondary Crushing (Gyrotory)			0.75	1.5	37.5	1,325				
	Screening/Conveying/ Handling			1.0	2.0	248.3	8,775				
	Total			2.0	4.0	296.4	10,475	0.099	0.198	0.985	1.97
Sand and Gravel	Primary crushing (Jaw)	91	100			28.3	1,000				
	Secondary Crushing (Gyrotory)					37.5	1,325				
	Screening/Conveying/ Handling					460.6	16,275				
	Total			0.05	0.1	526.4	18,600	0.018	0.035	0.217	0.434
Talc and Soapstone	Primary Crushing (Jaw)	9	10	0.25	0.5	10.6	375				
	Secondary Crushing (Gyratory)			0.75	1.5	37.5	1,325				
	Tertiary Crushing (Ball mill)			3.0	6.0	45.3	1,600				
	Screening/Conveying/ Handling			1.0	2.0	290.8	10,275				
	Total			5.0	10.0	384.2	13,575	0.128	0.256	0.980	1.96

from or based on information contained in AP-42.[9] Total uncontrolled emission rates were dependent on the number and types of crushing operations, and screening, handling, and conveying. These emission factors are shown in Tables 2-7 and 5-1.

5.2.3 Control Device Flow Rate

Theoretical control device flow rates for various types of equipment used in the non-metallic minerals industry are graphically displayed in Appendix C.[10] Typical types of equipment and their respective control device flow rates, based on the model plant process weights for each industry, are listed in Table 5-1. In determining the overall flow rate for each plant the following assumptions were made:

a) one grizzly, one bin discharge opening, and three storage bin openings per plant,

b) two conveyor transfers per crusher,

c) one vibrating screen per crusher (except for Diatomite which has no screens).

The total flow rates were used in determining NSPS for the model plants in each industry.

5.2.4 NSPS Allowable Emission Rates

NSPS allowable emission rates were calculated based on 0.05 g/Nm^3 (0.022 gr/dscf).[3] Also the model plant process weights from Section 5.2.1 and the model plant control device flow rates from Section 5.2.3 (both shown in Table

5-1) are required for these calculations. The formula used for determing NSPS is:

$$\text{NSPS emission rate (Kg/metric ton or lb/ton)} = \frac{(0.05\ \text{g/Nm}^3 \text{ or } 0.022\ \text{gr/dscf})(\text{flow rate})(\text{conversion factors})}{(\text{process weight})}$$

NSPS emission rates are also shown in Table 5-1.

5.2.5 Allowable Emissions Under State Regulations

Allowable state emission rates were determined by weighted averages of emission rates obtained from process weight tables promulgated in the current regulations of each state. The allowable emission rate in each state for a given mineral was weighted according to the percentage of production of that mineral in that state. In most cases the regulations from only those states producing the larger amounts of a given mineral were individually weighted. The remaining percentage of production of these minerals was assumed to fall under the most predominant of the state regulations. The production of minerals for which a breakdown by state was not available was also assumed to fall under the most predominant of the state regulations. Allowable emission regulations for each state are presented in Chapter 4.0 and the calculations are shown in Appendix D. The overall state allowable emission rates for all minerals considered in this report are shown in Table 5-1.

5.2.6 Industry Capacity, Capacity Utilization, and Growth Rate

The industry capacity, A, for 1975, capacity utilization, K, and capacity growth rate, P_C, were developed in Chapter 1.0 and are summarized in Table 1-1. There were two exceptions, however, to the 1975 industry capacities obtained from this Table. One exception was borates. Table 1-1 contains the industry-wide total capacity. However, some plants manufacture borates by a wet method and this process has minimal particulate emissions. Approximately 80 percent of the production capacity is at plants that dry process borates.[11] The capacity used for the NSPS evaluation was the approximate 1975 capacity of dry processing borate ore. This was calculated as follows:

1,174,000 metric tons borate ore capacity x 0.80 =

939,000 metric tons (1,035,000 tons) borate ore capacity, dry processed.

The other exception was slag. Table 1-1 contains the total capacity for all types of slag, however, not all types are crushed and screened. Approximately 93 percent of the slag produced is crushed and screened.[12] The capacity used for the NSPS evaluation was only that amount crushed and screened and was calaculated as follows:

45,644,000 metric tons slag capacity x 0.93 =

42,449,000 metric tons (46,792,000 tons) slag capacity, crushed and screened.

Detailed capacity calculations for both borate and slag are presented in Appendix E. The total industry capacity utilization factors and industry growth rates were used for these two minerals in the NSPS evaluation.

5.2.7 Equipment Depreciation Rate

As developed in Section 2.3, the expected overall equipment life in the non-metallic minerals industry is 20 years. Assuming a simple rate of depreciation, S, the calculation of equipment depreciation rate P_b is as follows:

Equipment depreciation rate, $P_b = \frac{1}{20} = 0.050\ S$

5.3 NSPS EMISSION REDUCTIONS

The impact of NSPS on emissions as calculated by Model IV is given in Table 5-2. The results in metric units are given in Table 5-3. Process steps included in this evaluation are crushing, grinding, sizing, and handling. Handling includes conveying, bagging, and loading. Combustion sources (e.g., dryers or kilns) are not included in the analysis. The largest tonnage reduction is in the sand and gravel industry, followed closely by the clay industry. Reductions in all other industries are much smaller. A 42 percent reduction in emissions is calculated for the sand and gravel industry, and 52 percent reduction for the clay industry. The smallest percent reduction is for the barite industry (36 percent) which has a declining growth rate. For the

Table 5-3. NSPS IMPACT ON EMISSIONS, 1975-1985, METRIC UNITS

Mineral	Emissions, metric tons/yr				
	1985 uncontrolled emissions, T_u	1975 emissions under existing regulations, T_a	1985 emissions under existing regulations, T_s	1985 emissions under NSPS, T_n	Reduction due to NSPS, $T_s - T_n$
Barite	972	788	638	408	229
Borate	8,192	46	80	38	42
Clay	3,504,000	37,150	42,690	20,340	22,350
Diatomite	1,580	263	397	153	244
Feldspar	4,255	495	603	284	319
Gypsum	72,450	7,728	9,798	4,374	5,423
Lightweight aggregates					
Perlite	3,078	261	376	151	225
Slag	76,620	2,712	3,179	1,836	1,493
Vermiculite	652	99	168	55	112
Pumice	27,640	3,679	5,445	2,202	3,243
Sand and gravel	63,260	45,720	63,260	37,000	26,260
Talc and soapstone	7,725	1,126	1,513	687	826

other industries, while the percent reductions range from 47 to 67 percent, the total reduction in emissions is much less than that of sand and gravel or clay.

The emission rates (uncontrolled, state allowable, and NSPS) have the most direct effect on the emission reduction. Also a doubling of the growth rate, P_c, was found to increase the emission impact (T_s-T_n) by approximately 30 to 60 percent. A change in the depreciation rate, P_b, to zero caused a 30 to 50 percent reduction in the emission impact.

REFERENCES FOR CHAPTER 5.0

1. Priorities for the Development of Standards of Performance, Draft, G.W. Walsh, Emission Standards and Engineering Division, EPA, Durham, North Carolina, November 13, 1973.

2. Impact of New Source Performance Standards on 1985 National Emissions from Stationary Sources, Volume I. The Research Corporation of New England, Wethersfield, Connecticut, October 24, 1975.

3. An Investigation of the Best Systems of Emission Reduction for Quarrying and Plant Process Facilities in the Crushed and Broken Stone Industry. U.S. Environmental Protection Agency, Research Triangle Park, North Carolina, August, 1975.

4. E/MJ International Directory of Mining and Mineral Processing Operations. New York, Engineering and Mining Journal, 1975. 488 p.

5. NEDS Point Source Print-out; U.S. Environmental Protection Agency, National Air Data Branch.

6. Industrial Minerals and Rocks, 4th Edition. Baltimore, Port City Press, 1975. 1360 p.

7. Mineral Facts and Problems, 1970 Edition. U.S. Bureau of Mines Bulletin 650, 1970. 1291 p.

8. Minerals Yearbook Vol. 1, 1973 Edition. Washington D.C., U.S. Bureau of Mines, 1975. 1383 p.

9. Compilation of Air Pollutant Emission Factors, 2nd Edition. U.S. Environmental Protection Agency. Publication No. AP-42. February 1976. p. 8: 1-1 to 20-2.

10. Air Pollution Engineering Manual, Second Edition, U.S. Environmental Protection Agency, Publication AP-40, Research Triangle Park, North Carolina, May, 1973.

11. Industrial Minerals and Rocks, 4th Edition. Baltimore, Maryland, Port City Press, 1975. p. 479.

12. Mineral Industry Survey "Slay-Iron and Steel in 1974". U.S. Department of the Interior, Bureau of Mines. Washington, D.C., 1975.

6.0 MODIFICATIONS AND RECONSTRUCTION

6.1 GENERAL

Emission limitations promulgated under a New Source Performance Standard (NSPS) apply to new, modified, and reconstructed facilities. It is recognized that facilities must be significantly altered or replaced from time-to-time. It is clear that a basic oxygen furnace which is built to replace an open hearth furnace is subject to NSPS limitations. But what is the status of an existing BOF which is remodeled to the extent that a larger oxygen lance is installed to increase capacity?

Sections 60.14 and 60.15, 40 CFR 60, define "modification" and "reconstruction." A step-by-step approach for determining whether a physical or operational change constitutes a modification or reconstruction under the regulations is shown in Figure 6-1. A simplified definition of some of the terms used in the regulations follow:

- Source - Generally an entire plant or process consisting of more than one facility. For example, the BOP-Shop may be considered a source.
- Facility - A particular operation within a source. For example, the BOF, Teeming Operation, and Hot Metal Transfer Operation may each be thought of as separate facilities within the source.

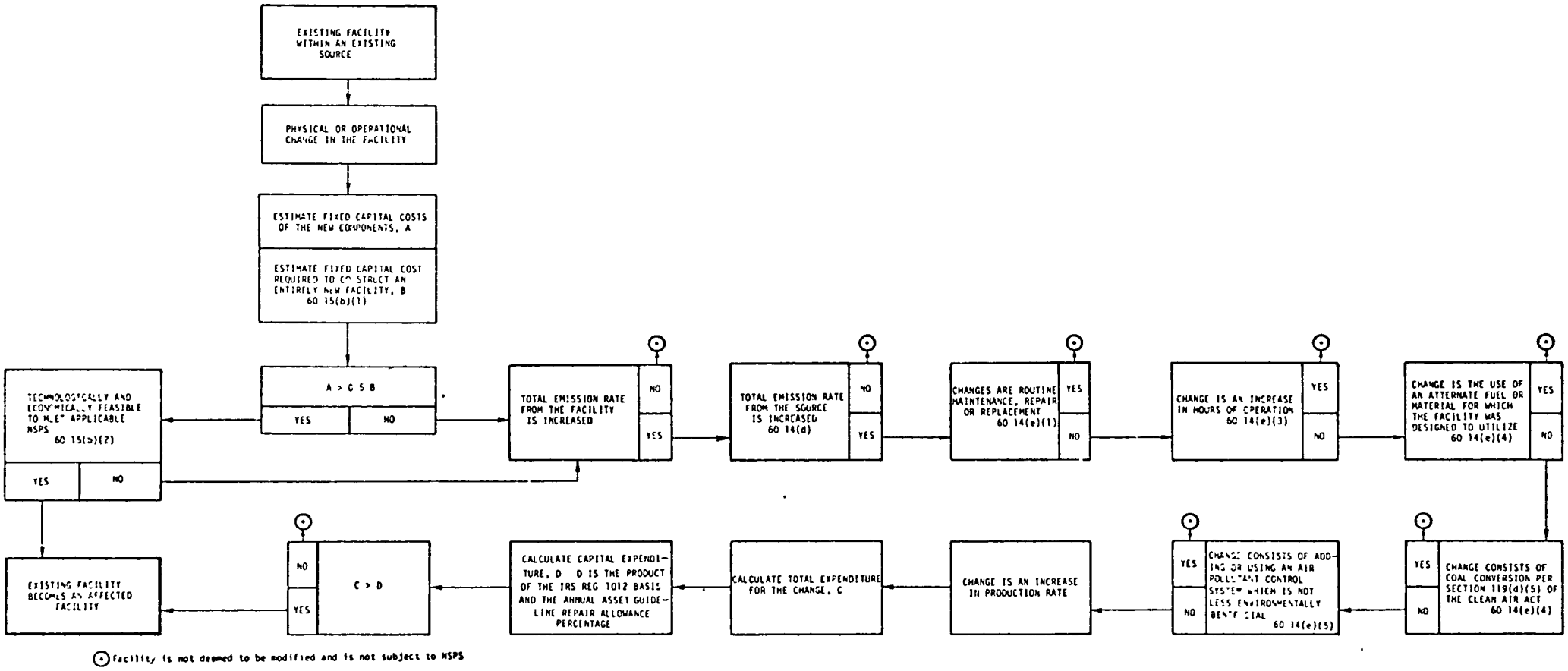

Figure 6-1. Method of determining whether changes to existing facility constitute a modification or reconstruction under 40 CFR 60.14 and 60.15.

- Affected Facility - One which is subject to the emission limitations of a NSPS. An affected facility is one which is newly built or one which has been modified or reconstructed.

6.1.1 Reconstruction

Irrespective of any change in pollutant emission rates, a physical or operational change may be deemed a reconstruction of the facility if the Fixed Capital Costs attributable to the change exceed 50 percent of the estimated Fixed Capital Costs required to construct a new facility and it is determined that it is technologically and economically feasible to meet the emission limitations specified by an applicable NSPS. The definition of reconstruction does not specify a time period over which fixed capital costs for different changes are additive. The purpose of this provision is to discourage the perpetuation of a facility, instead of replacing it at the end of its useful life with a newly constructed facility.

6.1.2 Modification

If a physical or operational change results in an increase in the emission rate to the atmosphere of any pollutant to which an NSPS applies, the facility may be deemed to be modified. However certain exceptions apply, as shown in Figure 6-1.

The most notable exception is known as the Bubble Concept. Briefly stated, if the increased emissions from

the facility in question are offset by a decrease in emissions from another facility within the source, where such decrease is over and above any emission decrease required by an applicable State Implementation Plan, the changed facility shall not be considered modified. However once this exemption is claimed, it will be more difficult to obtain subsequent exemptions under subsections (e)(2), (3), and (4) since, under certain circumstances, these subsequent exemptions could nullify the original reduction in emission rate used to obtain the Bubble Concept exemption under subsection (d).

In those cases where the purpose of the change is to increase production rates, and such change causes an increase in emission rates, the facility is deemed to be modified only if the total expenditures (both capital and expense dollars) attributable to the change exceed the product of the facility's 1012 Basis and the Annual Asset Guideline Repair Allowance Percentage (AAGRAP). The first figure is determined per IRS Code Section 1012. Very simply stated, it may be thought of as the initial cost, or basis, of the facility. The latter number is found in IRS Publication 534 (latest edition). Table 6-1 lists to AAGRAP's for various facilities for which NSPS regulations have been promulgated. It may generally be stated that if the cost of

Table 6-1. ANNUAL ASSET GUIDELINE REPAIR ALLOWANCE PERCENTAGES FOR SPECIFIED FACILITIES PER IRS PUBLICATION 534 1975 EDITION

Facility	AAGRAP
Nitric acid production unit	5.5
Sulfuric acid production unit	5.5
Lead smelter cupola	4.5
Cat crackers	7.0
Electric arc furnace	8.0
Mining, milling benefication and other primary preparation of non-metallic minerals	6.5

the changes exceeds ten percent of the original cost of the facility it will be deemed a capital expenditure.

6.2 APPLICABILITY OF 40 CFR 60.14 AND 60.15 TO THE NON-METALLIC MINERAL INDUSTRY

The applicability of 40 CFR 60.14 and 60.15 is highly dependent upon the definition of "facility". A facility can be defined as each piece of equipment (i.e. crushers, screens, conveyors, and drills) or as the entire non-metallic mineral processing plant. The definition used will determine the basis for determining the facility's Fixed Capital Cost and the monetary amount that will be considered a capital expenditure. The final decision on the definition of "facility" can not be made without further analysis.

Changes which result in a production and emission increase or major changes will be considered as modifications or reconstruction only if certain fixed capital cost conditions are met. These are stated in Section 6.1. The fixed capital cost to construct a new facility will be considerably less if a facility is defined as each piece of equipment rather than an entire plant. A facility defined as each piece of equipment results in more changes meeting the fixed cost conditions and therefore being considered as modifications or reconstruction.

6.2.1 Capital Costs of Facilities

A physical or operational change may be considered reconstruction if the capital cost of the new components exceeds 50 percent of the capital cost of a new facility. If a facility is defined as the entire plant, it is possible that a single piece of equipment could be completely replaced without making the facility subject to NSPS under the reconstruction provision. However, if each piece of equipment is considered a facility, overhauling a crusher or other piece of equipment could bring that facility under the NSPS. This could include replacing the jaws and overhauling the motor on a jaw crusher or replacing the rollers, motor and belts on the conveying system.

6.2.2 Capital Expenditures

Changes effected to increase production rates, which are not routine maintenance, but cause an emission rate increase, can be considered modifications. However, the cost of the change must constitute a capital expenditure per section 60.2 (bb) (see Section 6.1.2). For the mining, milling benefication and other primary preparation of nonmetallic minerals this would be the product of the initial cost of the facility and 6.5 percent. The amount considered to be a capital expenditure would be quite large if "facility" is defined as the entire plant. Many changes could be

made that would increase the emission rate, but the cost would not constitute a capital expenditure and the change would not be considered a modification. By defining "facility" as a piece of equipment, many changes could be considered modifications. Most of these changes would be involved with eliminating bottlenecks in the existing plant. An example of this would be increasing ball mill capacity by replacing the existing motor with one that would rotate the drum at a more efficient speed. This change would increase production and emissions. The cost of this type of change could constitute a capital expenditure and bring the facility under the NSPS. As a result, there would be a more favorable impact on the environment, but a greater economic burden for the source.

APPENDIX A

INDUSTRY CAPACITY GROWTH RATES, P_C

APPENDIX A

INDUSTRY CAPACITY GROWTH RATES, P_C

Included in this Appendix are the calculations for the capacity growth rates, P_C, for each industry. Also shown are graphs of the available production projection data.

BARITE

Mr. Stan Haines of the Bureau of Mines stated that a production of 480,000 tons of barium is forecast for 1985. He also added that the barium production is 56 percent of the total barite ore production.[1] This value was confirmed by a check of some historical data for both barite ore[2] and barium.[3]

Predicasts gave a growth rate of four percent per year through 1980.[4] Extrapolating to 1985, production of 1,703,000 tons of barite ore is forecast.

The historical trend of production, from the 1970 Mineral Facts and Problems[3] for the years 1958 to 1968, was nearly level. Mr. Haines also said that the downward trend in the petroleum industry, the major user of barite, could cause a decline in barite demand.[5] This projection was used rather than an extrapolation of Predicasts data. In the

PEDCo-ENVIRONMENTAL
SUITE 13 • ATKINSON SQUARE
CINCINNATI, OHIO 45246
513/771-4330

New Source Performance Standards

Project Number 3146-RR

Computation Sheet for Impact Assessment

Calculations Done by DARREL POWELL Date 5-24-76

Source BARITE

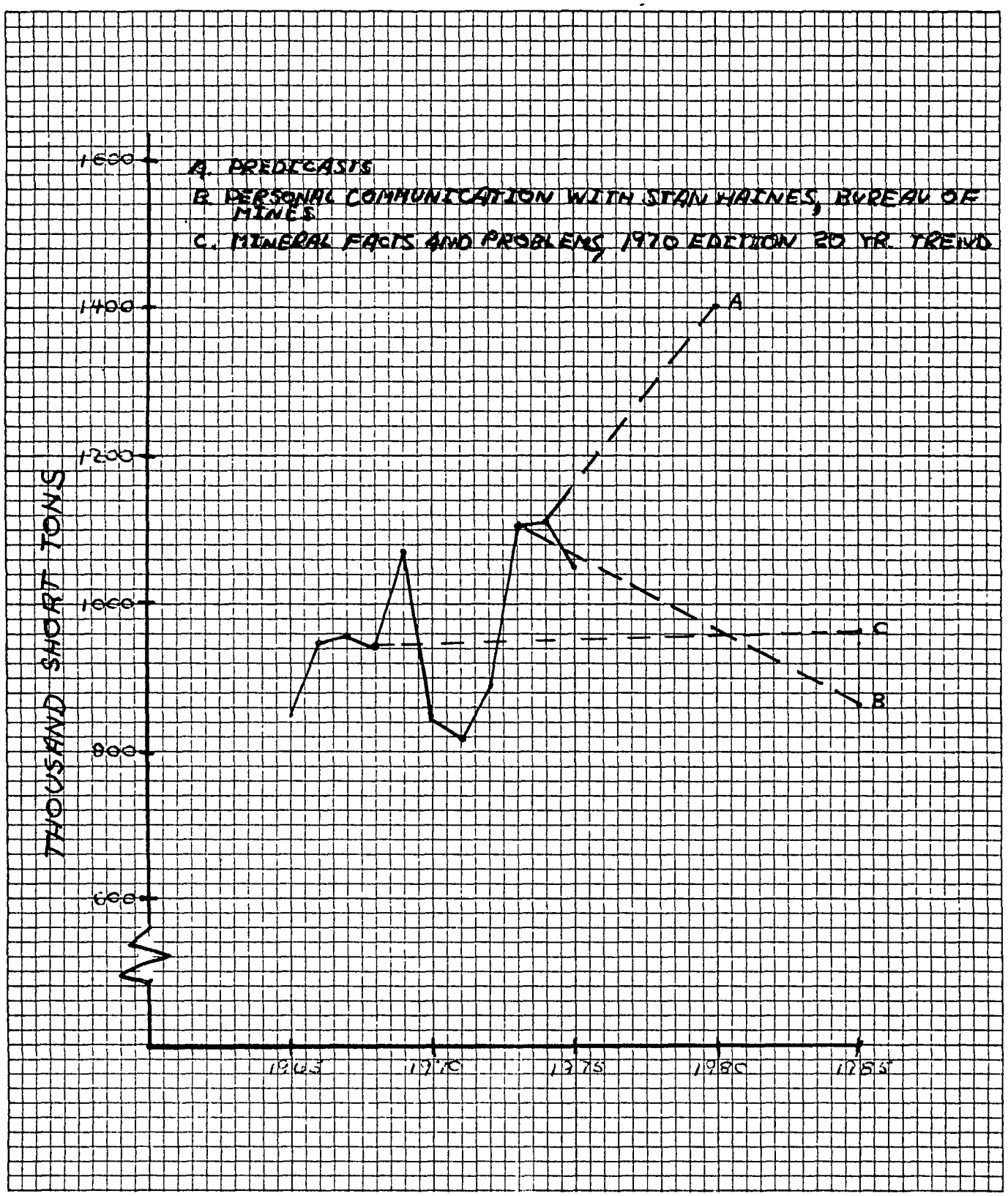

PEDCo-ENVIRONMENTAL
SUITE 13 • ATKINSON SQUARE
CINCINNATI, OHIO 45246
513/771-4330

New Source Performance Standards

Project Number 3146 RA

Computation Sheet for Impact Assessment

Calculations Done by DARREL POWELL Date 5/21/76

Source BARITE

$$\frac{480\times10^3 \text{ tons barium}}{0.56} = 857\times10^3 \text{ tons barite}$$

$$\frac{1985 \text{ production}}{K} = \frac{857\times10^3 \text{ tons barite}}{0.83} = 1033 \text{ tons barite capacity for 1985}$$

75 production is down from 74 production and trend is down, $\frac{74 \text{ production}}{74 \text{ capacity}} = \frac{75 \text{ production}}{75 \text{ capacity}}$

$$\frac{1056 \text{ tons barite in 75}}{75 \text{ capacity}} = \frac{1106\times10^3 \text{ tons barite}}{1339\times10^3 \text{ tons barite}}$$

75 capacity = 1278

$$R = \left(\frac{1033}{1278}\right)^{1/10} - 1 = 0.021$$

calculations, barium produced was changed to barite ore by dividing by 0.56.[1]

BORATE

Some references for this mineral gave projections for production and capacity in "tons of boron content." A check of historical figures from Commodity Data Summaries[6] and Mineral Yearbooks[7,8] revealed that boron content was consistently 17 percent of the total borate ore produced.

Predicasts projection of 255,000 tons of boron content for 1985[4] was lower than the 350,000 tons estimated by the 1975 Mineral Facts and Problems,[9] and it was also not as well documented. For this reason, the Bureau of Mines figure was chosen.

CLAY

Mr. Sarkis Ampian of the Bureau of Mines reported that clay production will be approximately 100,000 tons in 1985.[10] Considering the historical trends, this figure seems overly optimistic. Predicasts more conservative forecast of 70,000 tons[4] was more consistent with the trends. No data for capacity were available for clay, possibly because the many different types of clay made capacity hard to define. A utilization constant of 0.8 was found in the Survey of Current Business.[11] This value appeared reasonable and consistent with the other utilization constants, and was therefore used to estimate capacity.

PEDCo-ENVIRONMENTAL
SUITE 13 • ATKINSON SQUARE
CINCINNATI, OHIO 45246
513/771-4330

New Source Performance Standards

Project Number 3146-RR

Computation Sheet for Impact Assessment

Calculations Done by DARREL POWELL Date 5-24-1976

Source BORATE ORE

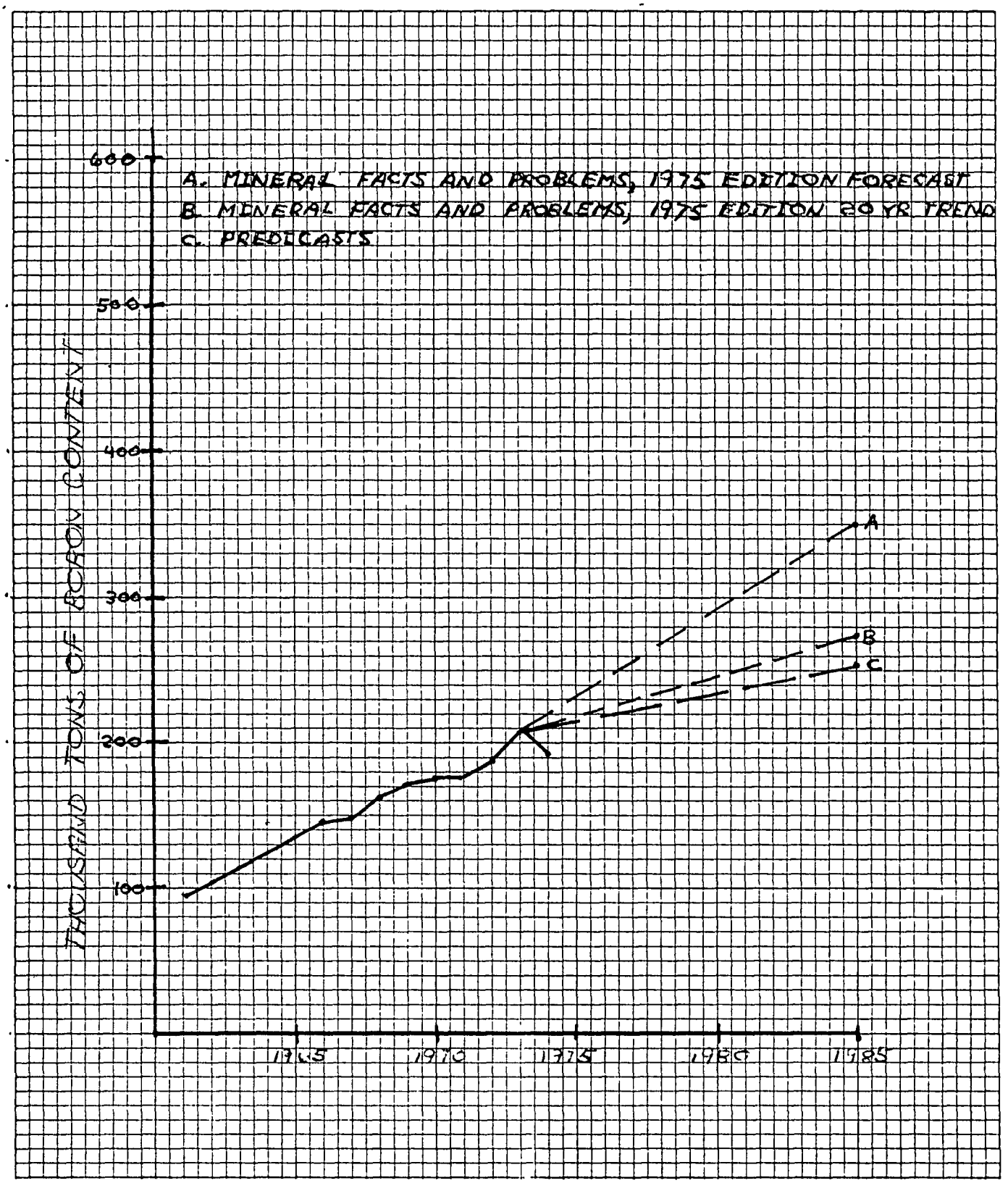

PEDCo-ENVIRONMENTAL
SUITE 13 • ATKINSON SQUARE
CINCINNATI, OHIO 45246
513/771-4330

New Source Performance Standards

Project Number 3146-RR

Computation Sheet for Impact Assessment

Calculations Done by DARREL POWELL Date 5-21-76

Source BORATES

$\frac{350\times10^3 \text{ tons boron content}}{0.17} = 2059\times10^3$ tons borates produced in 1985

production from 74 to 75 was down while trend was up, so 74 capacity = 75 capacity = 220×10^3 tons boron content

$\frac{220\times10^3 \text{ tons boron content}}{0.17} = 1294\times10^3$ tons borate capacity for 1975

$K = 0.92$

1985 capacity = $\frac{2059\times10^3}{0.92} = 2238\times10^3$ tons borate capacity for 1985

$P_c = \left(\frac{2238}{1294}\right)^{1/10} - 1 = 0.056$

PEDCo-ENVIRONMENTAL
SUITE 13 • ATKINSON SQUARE
CINCINNATI, OHIO 45246
513/771-4330

New Source Performance Standards

Project Number 3/46-RR

Computation Sheet for Impact Assessment

Calculations Done by DARREL POWELL Date 5-24-76

Source CLAY

A PERSONAL CONVERSATION WITH SARRIS AMADAN, BUREAU OF MINES
B. PREDICASTS
C. MINERAL FACTS AND PROBLEMS, 1970 EDITION, 20 YR TREND

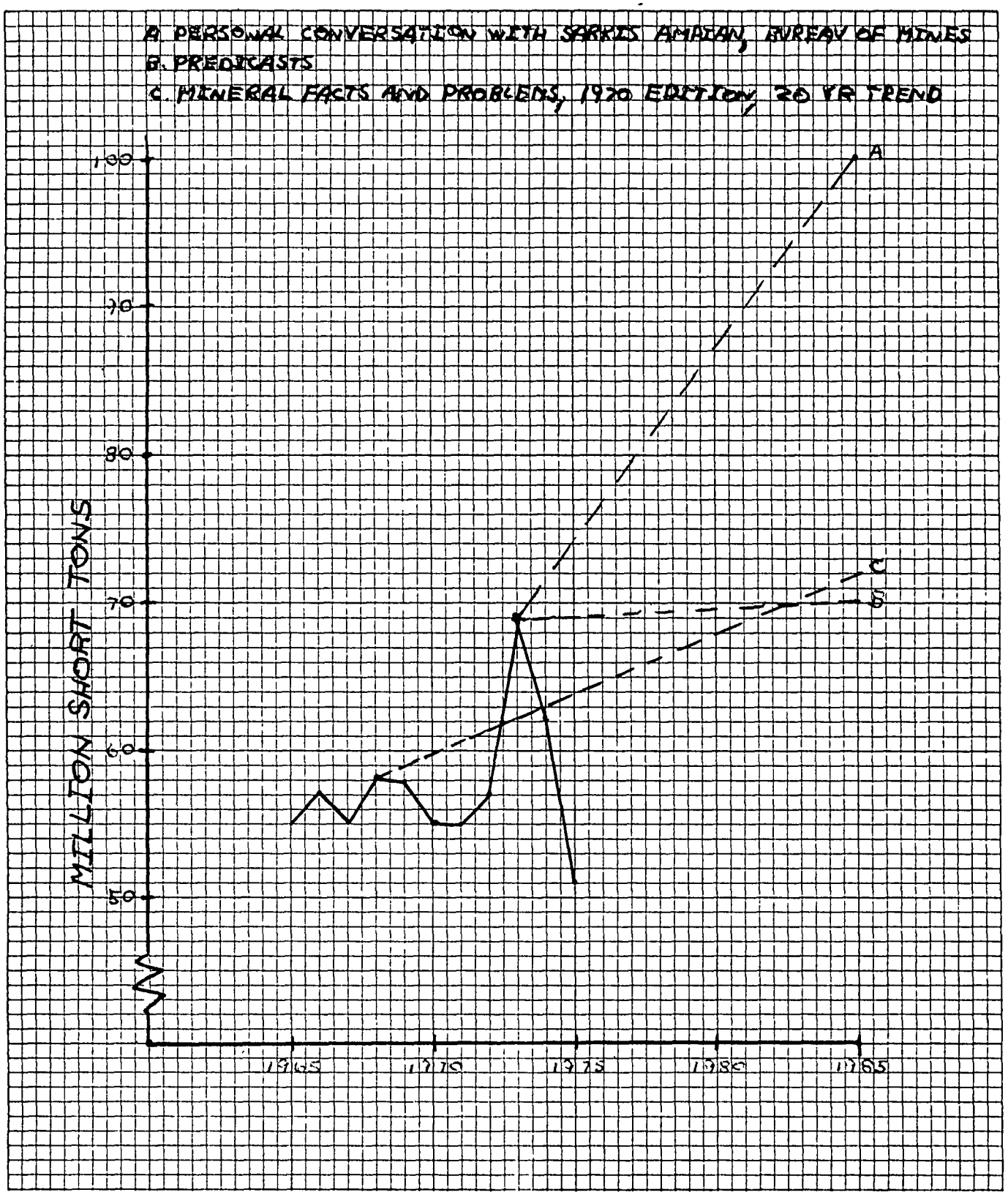

PEDCo - ENVIRONMENTAL
SUITE 13 • ATKINSON SQUARE
CINCINNATI, OHIO 45246
513/771-4330

New Source Performance Standards

Project Number 3146-RR

Computation Sheet for Impact Assessment

Calculations Done by JOHN ZOLLER Date 6-28-76

Source CLAY

$$1974\ \text{CAPACITY} = \frac{1974\ \text{PRODUCTION}}{0.80} = \frac{61,087,000}{0.80} = 76,400,000\ \text{TONS CAPACITY, 1974}$$

SINCE 1975 PRODUCTION IS LESS THAN 1974 PRODUCTION WHILE THE GENERAL TREND IS UPWARD, LET 1974 CAPACITY = 1975 CAPACITY

$$1985\ \text{CAPACITY} = \frac{1985\ \text{PRODUCTION}}{0.80} = \frac{70,000,000\ \text{TONS}}{0.80} = 87,500,000\ \text{TONS CAPACITY IN 1985}$$

$$P_c = \left(\frac{87,500,000}{76,400,000}\right)^{1/10} - 1 = 0.014c$$

DIATOMITE

Predicasts[4] and the 1975 Mineral Facts and Problems[12] were very nearly in agreement on the forecast for diatomite. Mineral Facts and Problems projected 1,000,000 tons to be mined in 1985[12] while Predicasts stated 963,000 tons.[4] The former figure was accepted as it was better documented.

FELDSPAR

The growth rate given for feldspar of 3.6 percent per year from 1973 to 2000 by the Bureau of Mines[13] resulted in a prediction of 1,211,000 tons feldspar for 1985. This compared to 942,000 tons estimated by the Predicasts.[4] The Predicasts figure better approximated historical trends and was therefore accepted.

GYPSUM

The range of projections was very large for gypsum. Rock Products 1980 prediction was very high at 16.5 million tons,[14] while 1985 figures from the 1975 Mineral Facts and Problems and Predicasts were lower. The 1975 Mineral Facts and Problems stated 15,000,000[15] tons and Predicasts presented 11,700,000[4] tons as the 1985 estimates. The Mineral Facts and Problems number was used; it was in the mid-range and Predicasts appeared overly pessimistic in comparison.

PEDCo-ENVIRONMENTAL
SUITE 13 • ATKINSON SQUARE
CINCINNATI, OHIO 45246
513/771-4330

New Source Performance Standards

Project Number 3146-RR

Computation Sheet for Impact Assessment

Calculations Done by DARREL POWELL Date 5-25-76

Source DIATOMITE

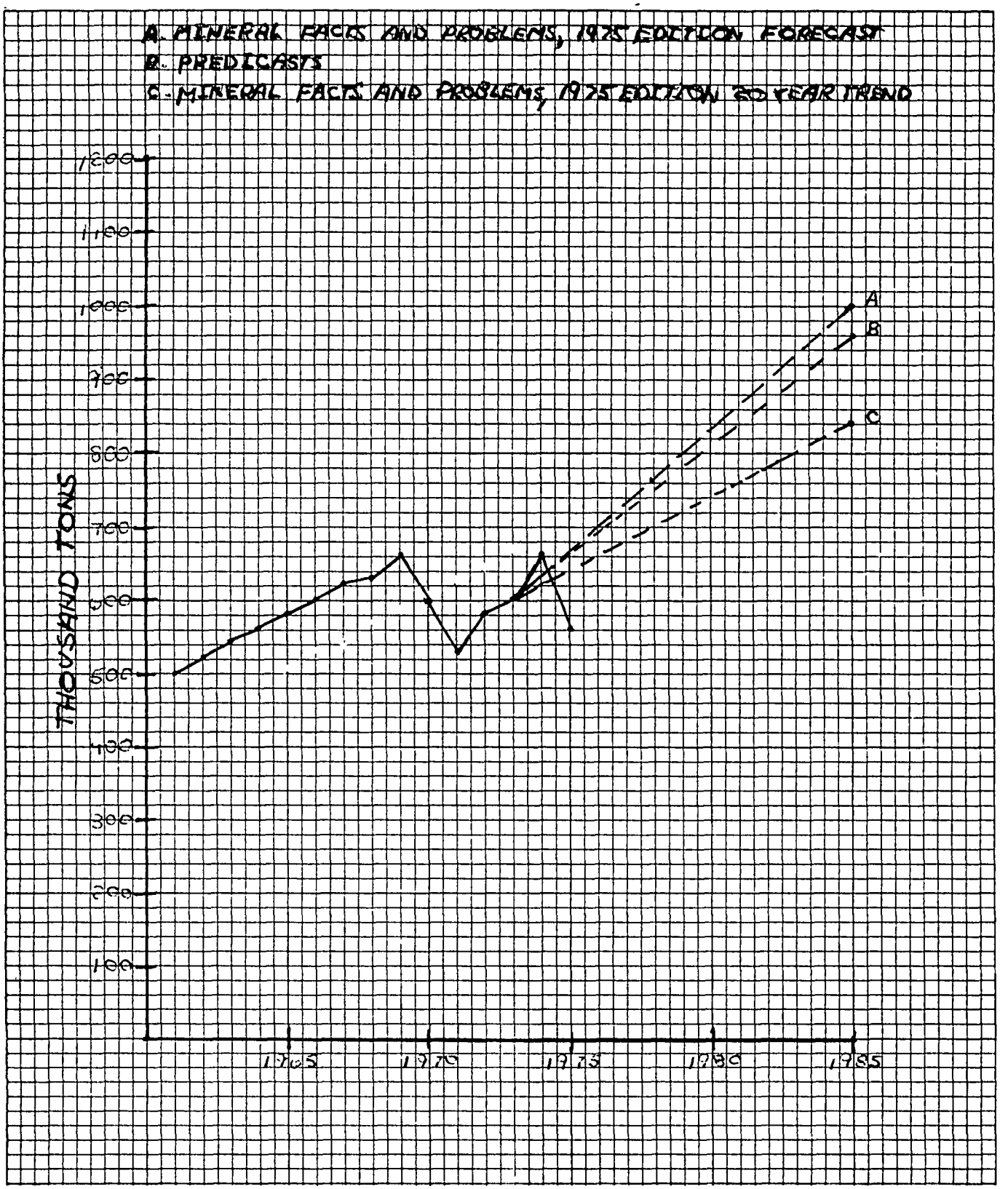

PEDCo-ENVIRONMENTAL
SUITE 13 • ATKINSON SQUARE
CINCINNATI, OHIO 45246
513/771-4330

New Source Performance Standards

Project Number 3146-RR

Computation Sheet for Impact Assessment

Calculations Done by DARREL POWELL Date 5-21-76

Source DIATOMITE

1975 production was down while the trend is upward,

so 1974 capacity = 1975 capacity = 1000×10^3 tons capacity

$$1985 \text{ capacity} = \frac{1985 \text{ production}}{K} = \frac{10^6 \text{ tons 1985 product}}{0.66}$$

$= 1515 \times 10^3$ tons capacity for 1985

$$R_c = \left(\frac{1515}{1000}\right)^{1/10} - 1 = 0.042_c$$

PEDCo-ENVIRONMENTAL
SUITE 13 • ATKINSON SQUARE
CINCINNATI, OHIO 45246
513/771-4330

New Source Performance Standards

Project Number 3146-RR

Computation Sheet for Impact Assessment

Calculations Done by DARREL POWELL Date 6-4-76

Source FELDSPAR

A. COMMUNICATION WITH MIKE POTTER, BUREAU OF MINES
B. MINERAL FACTS AND PROBLEMS, 1970 EDITION 20 YR TREND
C PREDICASTS

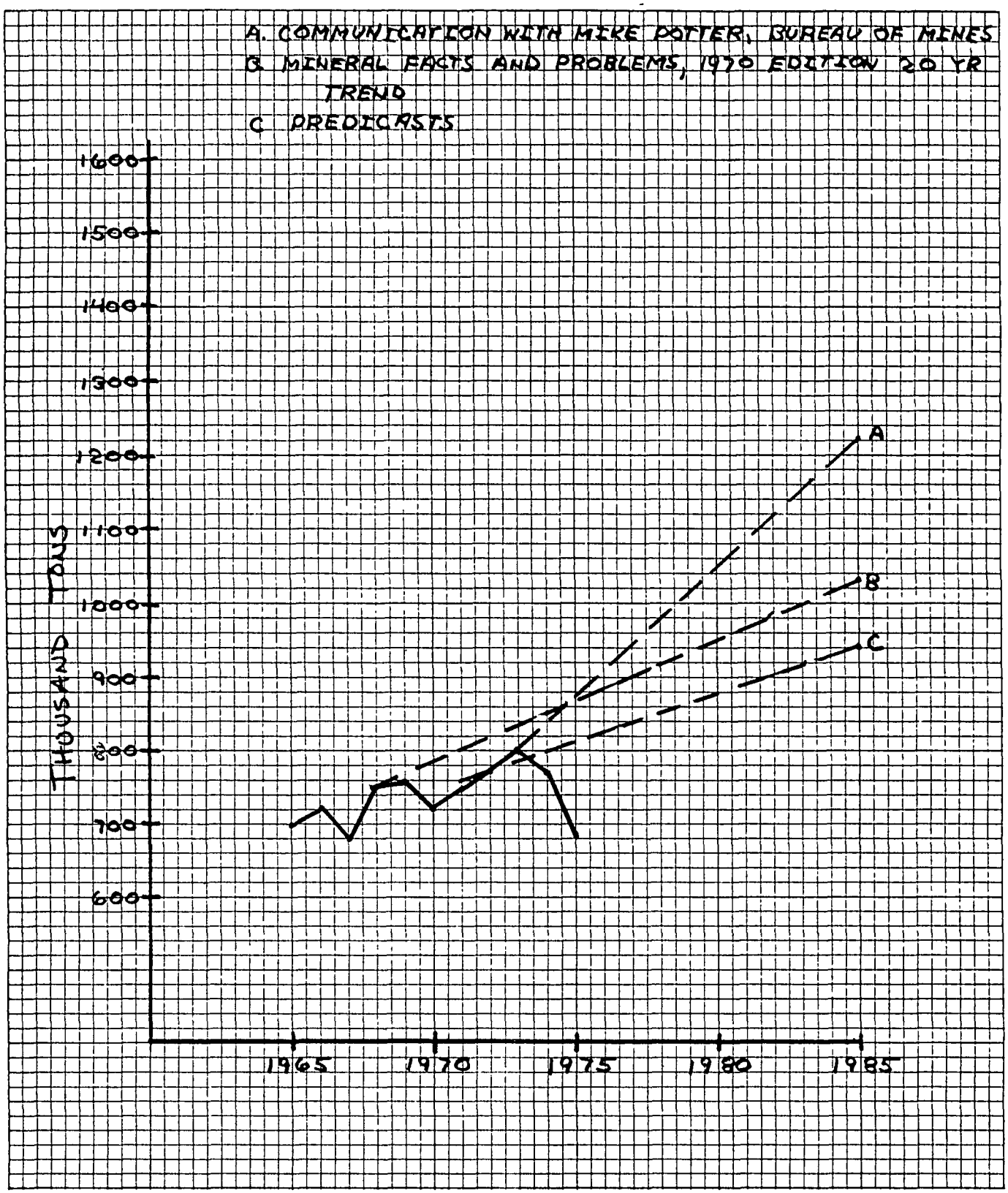

PEDCo-ENVIRONMENTAL
SUITE 13 • ATKINSON SQUARE
CINCINNATI, OHIO 45246
513/771-4330

New Source Performance Standards

Project Number 3146-RR

Computation Sheet for Impact Assessment

Calculations Done by DARREL POWELL Date 6-4-76

Source FELDSPAR

1975 production was lower than 1974 production, so 1974 capacity was assumed equal to 1975 capacity

$= 950 \times 10^3$ tons capacity for 1975

1985 production = 942,000 tons

$$1985 \text{ capacity} = \frac{1985 \text{ production}}{K} = \frac{942 \times 10^3 \text{ tons}}{0.81}$$

$= 1163 \times 10^3$ tons capacity for 1985

$$P_c = \left(\frac{1163}{950}\right)^{1/10} - 1 = 0.020_c$$

PEDCo-ENVIRONMENTAL
SUITE 13 • ATKINSON SQUARE
CINCINNATI, OHIO 45246
513/771-4330

New Source Performance Standards

Project Number 3146-RR

Computation Sheet for Impact Assessment

Calculations Done by DARREL POWELL Date 5-25-76

Source GYPSUM

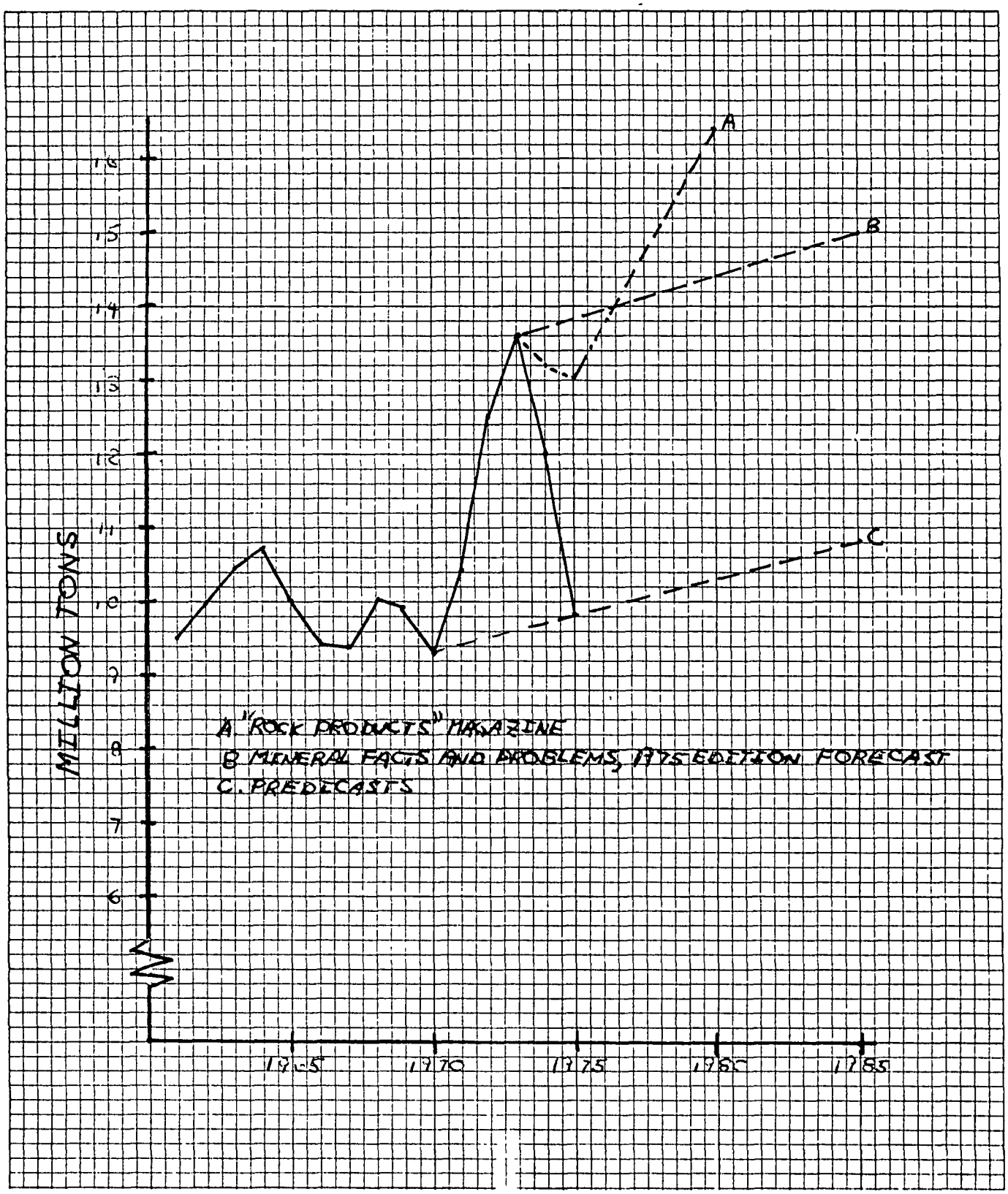

PEDCo-ENVIRONMENTAL
SUITE 13 • ATKINSON SQUARE
CINCINNATI. OHIO 45246
513/771-4330

New Source Performance Standards

Project Number 3146-RR

Computation Sheet for Impact Assessment

Calculations Done by DARREL POWELL Date 5-21-76

Source GYPSUM

1975 output was down from 1974, while the projected number is higher, so 1974 capacity = 1975 capacity

$= 15 \times 10^6$ tons capacity in 1975

$$1985 \text{ capacity} = \frac{1985 \text{ production}}{K} = \frac{15 \times 10^6 \text{ tons production}}{0.80}$$

$= 19 \times 10^6$ tons capacity for 1985

$$P_c = \left(\frac{19}{15}\right)^{1/10} - 1 = 0.024$$

LIGHTWEIGHT AGGREGATES

Perlite

Units of total crude perlite sold and used were used because they were most often cited in the literature for projections.

Two sources, Predicasts and Rock Products predicted output for expanded perlite. Rock Products presented a production estimate of 530,000 tons for 1980[16] and Predicasts gave a consumption figure of 770,000 tons in 1985.[4]

The apparently most reliable figure was that of the Bureau of Mines. A representative there said the probable domestic demand for crude perlite will be 800,000 tons.[17] Production was assumed to be approximately equal to demand. This is a more conservative estimate, as the Predicasts number for expanded perlite alone is nearly as high. On this basis, the Bureau of Mines projection was chosen.

Slag

Growth rates or projections were not available for slag, however the Slag Institute reports that slag production closely parallels steel production.[18] Assuming this relationship, and that slag capacity grows at approximately the same rate as production, the growth rate in the steel industry obtained from the Bureau of Mines[19] was used to calculate a projection for slag capacity.

PEDCo-ENVIRONMENTAL
SUITE 13 • ATKINSON SQUARE
CINCINNATI, OHIO 45246
513/771-4330

New Source Performance Standards

Project Number 3146-RR

Computation Sheet for Impact Assessment

Calculations Done by DARREL POWELL Date 5-25-76

Source PERLITE

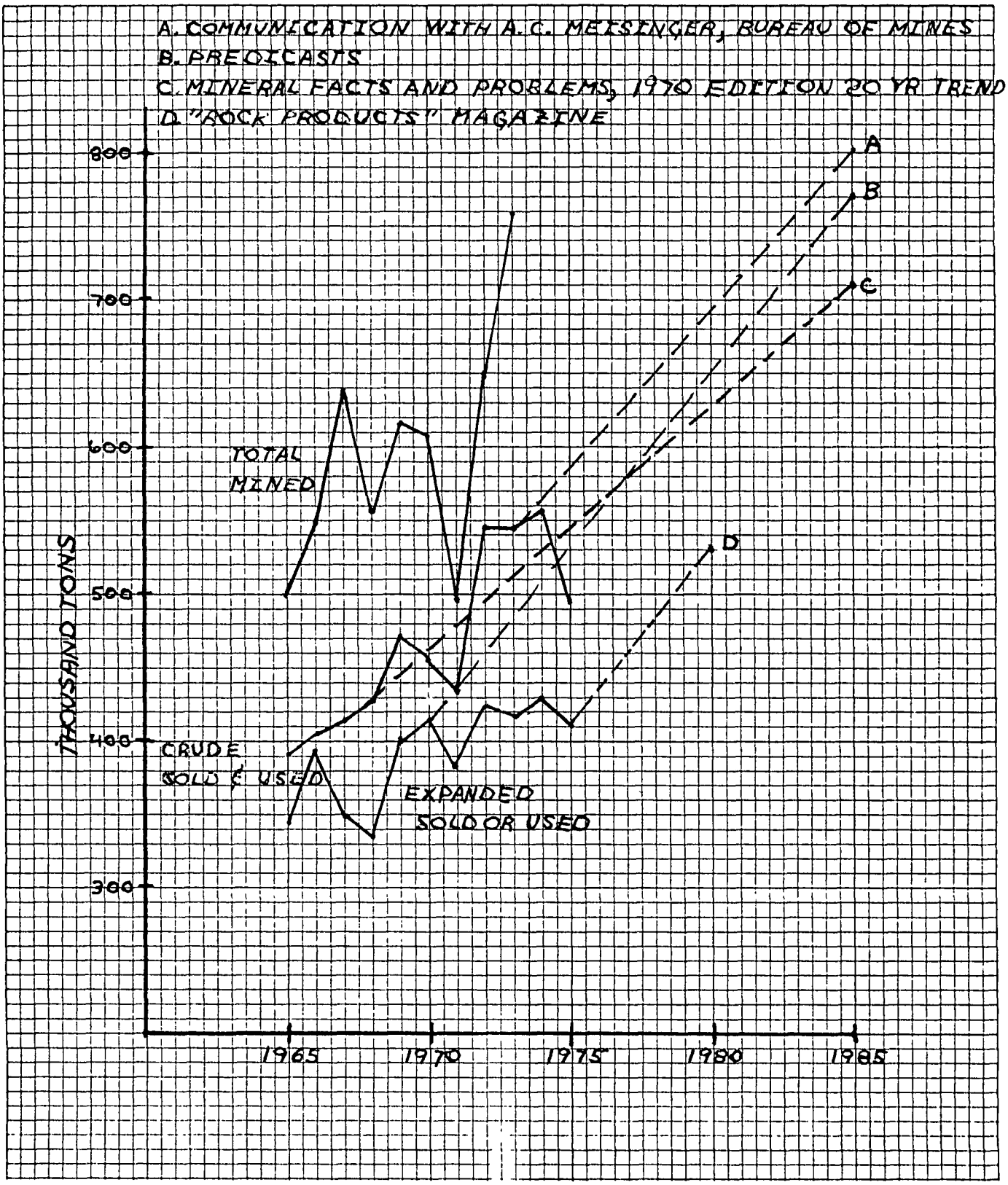

PEDCo-ENVIRONMENTAL
SUITE 13 • ATKINSON SQUARE
CINCINNATI, OHIO 45246
513/771-4330

New Source Performance Standards

Project Number 3146-RR

Computation Sheet for Impact Assessment

Calculations Done by DARREL POWELL Date 5/21/76

Source PERLITE

$$1974 \text{ capacity} = \frac{1974 \text{ production}}{K} = \frac{555 \times 10^3 \text{ tons}}{0.8}$$

$$= 694 \times 10^3 \text{ tons capacity for 1974}$$

1974 capacity assumed = 1975 capacity since there was a decline from 1974 to 1975 in production and the general trend is increasing

$$1985 \text{ capacity} = \frac{1985 \text{ production}}{K} = \frac{800 \times 10^3 \text{ tons}}{0.8}$$

$$= 1000 \times 10^3 \text{ tons capacity for 1985}$$

$$P_c = \left(\frac{1000}{694}\right)^{1/10} - 1 = 0.037_c$$

PEDCo-ENVIRONMENTAL
SUITE 13 • ATKINSON SQUARE
CINCINNATI, OHIO 45246
513/771-4330

New Source Performance Standards

Project Number 3146-RR

Computation Sheet for Impact Assessment

Calculations Done by JOHN ZOLLER Date 6-18-76

Source SLAG

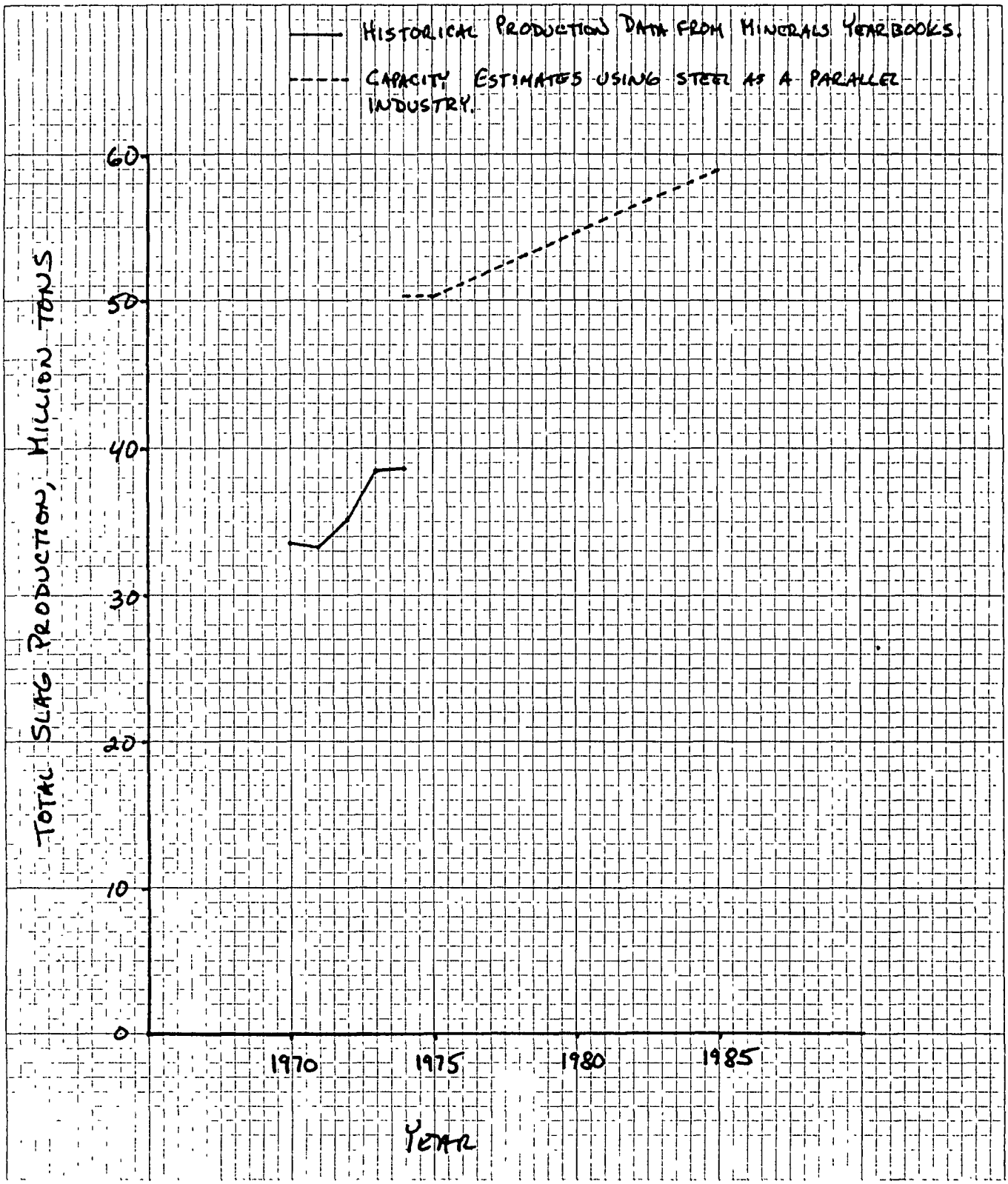

PEDCo-ENVIRONMENTAL
SUITE 13 • ATKINSON SQUARE
CINCINNATI, OHIO 45246
513/771-4330

New Source Performance Standards

Project Number 3146-RR

Computation Sheet for Impact Assessment

Calculations Done by JOHN ZOLLER Date 6-18-76

Source SLAG

$$1974 \text{ CAPACITY} = \frac{1974 \text{ PRODUCTION}}{K} = \frac{38{,}742 \times 10^3 \text{ TONS}}{0.77} =$$

$$= 50{,}314 \times 10^3 \text{ TONS CAPACITY IN } 1974$$

SINCE STEEL PRODUCTION DECREASED FROM 1974 TO 1975, SLAG PRODUCTION PROBABLY DECREASED FROM 1974 TO 1975. THE LONG RANGE TREND IN STEEL PRODUCTION IS INCREASING AT A COMPOUND RATE OF 1.6% PER YEAR. THEREFORE, 1974 CAPACITY WAS ASSUMED TO REMAIN CONSTANT FOR 1975 AND INCREASE FROM THAT POINT.

$$50{,}314 \times 10^3 \times (1.016)^{10} = 58{,}969 \times 10^3 \text{ TONS CAPACITY FOR } 1985$$

Vermiculite

Values for crude vermiculite were used for computations rather than expanded vermiculite data because of the availability of data and the interest in the initial processing of the product. The vermiculite chapter of the 1975 Mineral Facts and Problems forecast 575,000 tons of vermiculite in 1985[20] while Predicasts estimated 354,000 tons in the same year.[4] Rock Products predicted 1980 output for exfoliated vermiculite to be 386,000 tons.[21]

The Bureau of Mines estimate was used because it is in better agreement with historical data.

PUMICE

Volcanic cinder was almost always included with pumice statistics. For 1985, the Bureau of Mines reported a demand of 6,100,000 tons pumice and volcanic cinder[17] and Predicasts estimated 5,910,000 tons.[4] Rock Products reported a figure of 5,200,000 tons[22] in 1980 was consistent with the other estimates.

The Bureau of Mines prediction was considered the most acceptable, but the difference between estimates is quite small. Capacity figures were unavailable because of the confidentiality of the data.

SAND AND GRAVEL

Predicasts reported a 4.1 percent annual growth rate based on 1968 data,[4] while Rock Products stated a 4 percent

PEDCo-ENVIRONMENTAL
SUITE 13 • ATKINSON SQUARE
CINCINNATI, OHIO 45246
513/771-4330

New Source Performance Standards

Project Number 3146-RR

Computation Sheet for Impact Assessment

Calculations Done by DARREL POWELL Date 5-25-76

Source VERMICULITE

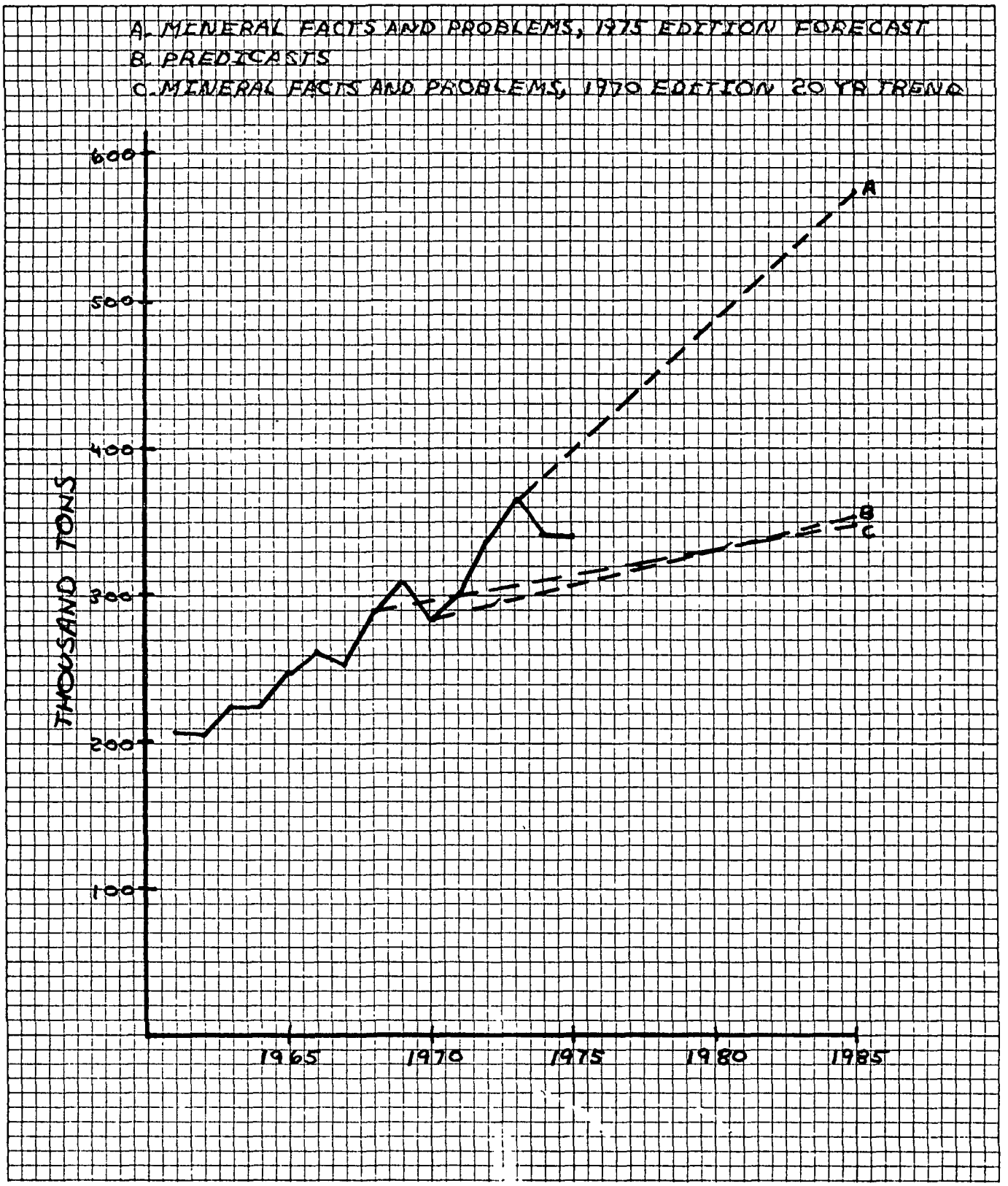

PEDCo-ENVIRONMENTAL
SUITE 13 • ATKINSON SQUARE
CINCINNATI, OHIO 45246
513/771-4330

New Source Performance Standards

Project Number 3146-RR

Computation Sheet for Impact Assessment

Calculations Done by DARREL POWELL Date 5-21-76

Source VERMICULITE

1975 production was down from 1974 production, so 1974 capacity = 1975 capacity = 425×10^3 tons

$$1985 \text{ capacity} = \frac{1985 \text{ production}}{K} = \frac{575 \times 10^3 \text{ tons}}{0.80}$$

$= 719 \times 10^3$ tons capacity for 1985

$$P_c = \left(\frac{719}{425}\right)^{1/10} - 1 = 0.054c$$

PEDCo-ENVIRONMENTAL
SUITE 13 • ATKINSON SQUARE
CINCINNATI, OHIO 45246
513/771-4330

New Source Performance Standards

Project Number 3146-RR

Computation Sheet for Impact Assessment

Calculations Done by DARREL POWELL Date 5-25-76

Source PUMICE, PUMICITE, AND VOLCANIC CINDER

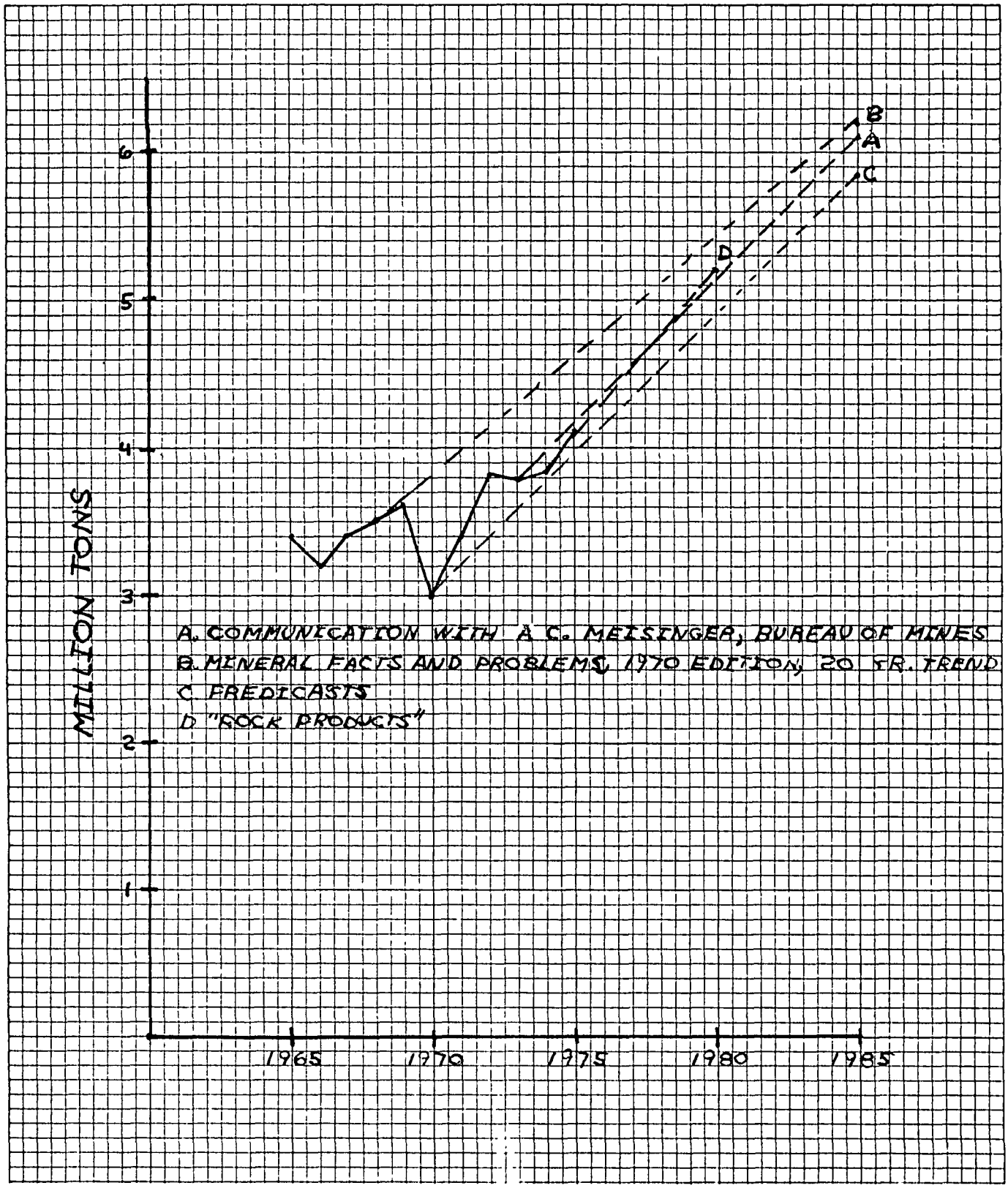

A. COMMUNICATION WITH A C. MEISINGER, BUREAU OF MINES
B. MINERAL FACTS AND PROBLEMS, 1970 EDITION, 20 YR. TREND
C. FREDICASTS
D "ROCK PRODUCTS"

PEDCo-ENVIRONMENTAL
SUITE 13 • ATKINSON SQUARE
CINCINNATI, OHIO 45246
513/771-4330

New Source Performance Standards

Project Number 3146-RR

Computation Sheet for Impact Assessment

Calculations Done by DARREL POWELL Date 5-21-76

Source PUMICE

1975 production was up from 1974 and the trend was up, so:

$$\text{1975 capacity} = \frac{\text{1975 production}}{K} = \frac{4117 \times 10^3 \text{ tons}}{0.8}$$

$= 5146 \times 10^3$ tons capacity for 1975

$$\text{1985 capacity} = \frac{\text{1985 production}}{K} = \frac{6100 \times 10^3 \text{ tons}}{0.8}$$

$= 7625 \times 10^3$ tons capacity for 1985

$$P_c = \left(\frac{7625}{5146}\right)^{1/10} - 1 = 0.040_c$$

PEDCo-ENVIRONMENTAL
SUITE 13 • ATKINSON SQUARE
CINCINNATI, OHIO 45246
513/771-4330

New Source Performance Standards

Project Number 3146-RR

Computation Sheet for Impact Assessment

Calculations Done by DARREL POWELL Date 5-25-76

Source SAND AND GRAVEL

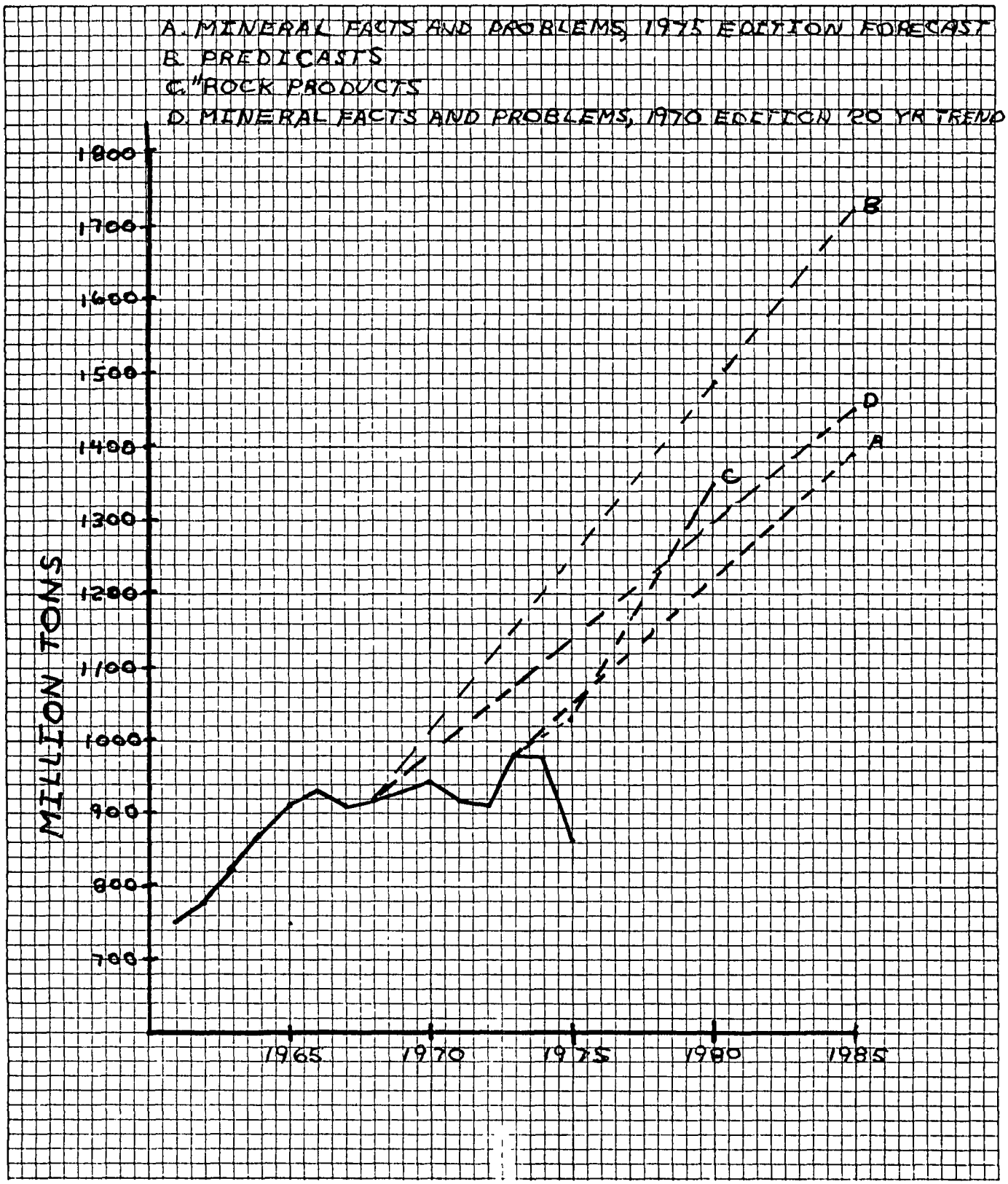

PEDCo-ENVIRONMENTAL
SUITE 13 • ATKINSON SQUARE
CINCINNATI, OHIO 45246
513/771-4330

New Source Performance Standards

Project Number 3146-RR

Computation Sheet for Impact Assessment

Calculations Done by DARREL POWELL Date 6-4-76

Source SAND AND GRAVEL

1975 capacity was given as $1,260 \times 10^6$ tons

1985 production is estimated at 1390×10^6 tons

$$1985 \text{ capacity} = \frac{1985 \text{ production}}{K} = \frac{1390 \times 10^6 \text{ tons}}{0.8}$$

$= 1738 \times 10^6$ tons capacity for 1985.

$$P_c = \left(\frac{1738}{1260}\right)^{1/10} - 1 = 0.033_c$$

growth in demand from 1974.[23] Both of these predictions were optimistic when compared to the Bureau of Mines 1975 Mineral Facts and Problems forecast of 1390 million tons for 1985.[24] The Bureau of Mines data were used rather than the others as it was the most recent and more closely follows historical trends.

TALC, SOAPSTONE, AND PYROPHYLLITE

The 1976 Commodity Data Summaries[6] predicted a 4 percent increase in demand through 1980 while the Mineral Facts and Problems for 1975 reported that 1,700,000 tons of talc-group minerals are estimated to be mined in 1985.[25] Predicasts more conservative production estimate was 1,310,000 tons[4] for 1985. Mineral Facts and Problems information was preferred over an extrapolation of the Commodity Data Summaries or Predicasts projections since it more closely followed historical trends.

PEDCo-ENVIRONMENTAL
SUITE 13 • ATKINSON SQUARE
CINCINNATI. OHIO 45246
513/771-4330

New Source Performance Standards

Project Number 3146-RR

Computation Sheet for Impact Assessment

Calculations Done by DARREL POWELL Date 5-25-76

Source TALC, SOAPSTONE, & PYROPHYLLITE

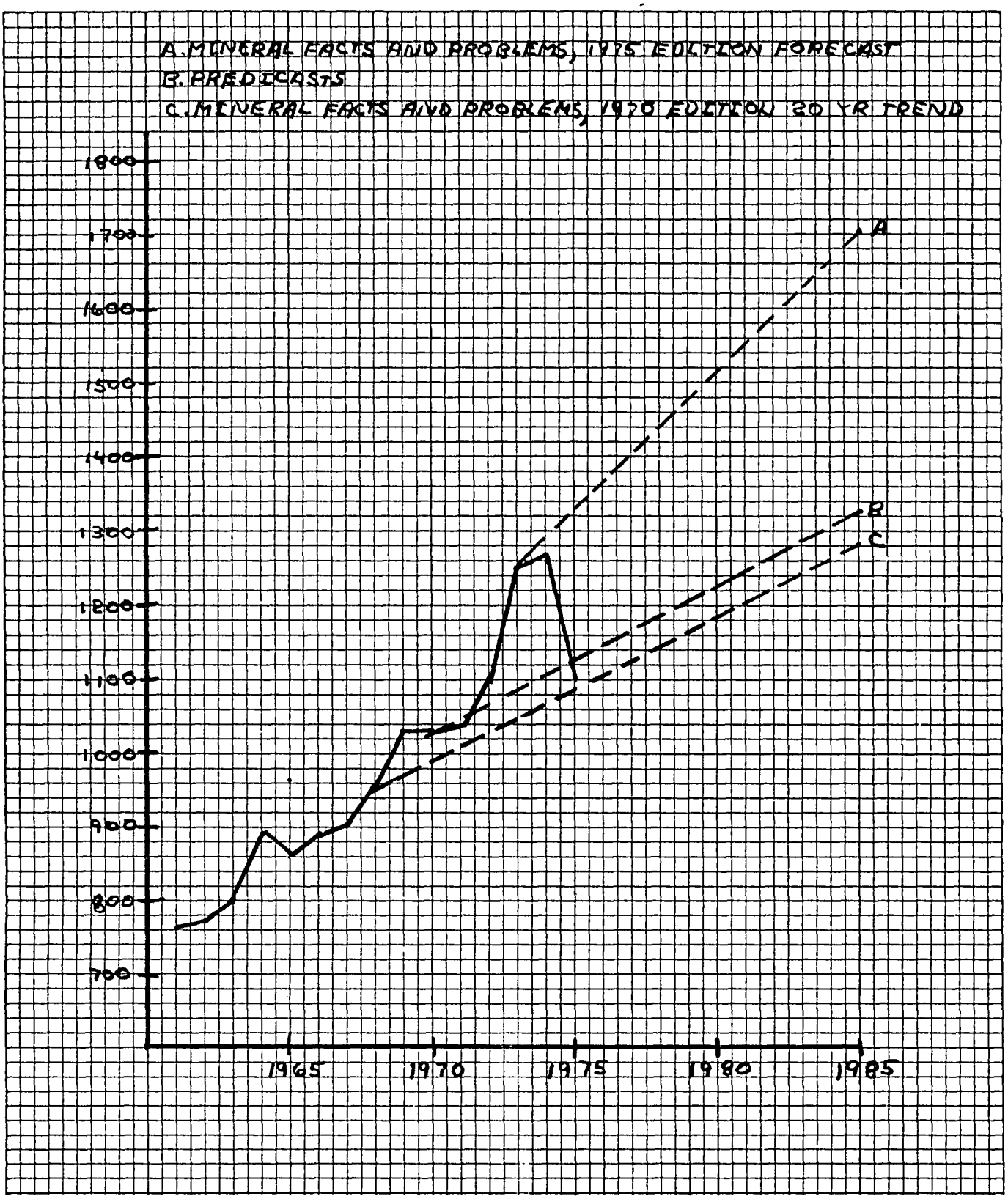

PEDCo-ENVIRONMENTAL
SUITE 13 • ATKINSON SQUARE
CINCINNATI, OHIO 45246
513/771-4330

New Source Performance Standards

Project Number 3146-RR

Computation Sheet for Impact Assessment

Calculations Done by DARREL POWELL Date 5-26-76

Source TALC, SOAPSTONE, & PYROPHYLLITE

Production was down in 1975 while projection is upward, so 74 capacity = 75 capacity = 1280×10^3 tons 1975 capacity.

$$1985 \text{ capacity} = \frac{1985 \text{ production}}{K} = \frac{1700 \times 10^3 \text{ tons produced}}{0.99}$$

$= 1718 \times 10^3$ tons capacity for 1985

$$P_c = \left(\frac{1718}{1280}\right)^{1/10} - 1 = 0.030_c$$

REFERENCES FOR APPENDIX A

1. Personal Communication: Mr. Stan Haines, Bureau of Mines, Washington, D.C., and Darrel Powell, PEDCo-Environmental Specialists, Inc., April 27, 1976.

2. Minerals Yearbook 1969. Washington, D.C., U.S. Department of the Interior, Bureau of Mines. 1971.

3. Mineral Facts and Problems, 1970. Washington, D.C., U.S. Department of the Interior, Bureau of Mines. 1970.

4. Predicasts, 1975 Annual Cumulative Edition. Predicasts, Inc., Cleveland, Ohio, 1976.

5. Personal Communication: Mr. Stan Haines, Bureau of Mines, Washington, D.C., and Darrel Powell, PEDCo-Environmental Specialists, Inc., May 17, 1976.

6. Commodity Data Summaries, 1976. U.S. Department of the Interior, Bureau of Mines. Washington, D.C., 1976.

7. Minerals Yearbook 1968. Washington, D.C., U.S. Department of the Interior, Bureau of Mines. 1970.

8. Minerals Yearbook 1973. Washington, D.C., U.S. Department of the Interior, Bureau of Mines. 1975.

9. Preprint from Mineral Facts and Problems, 1975 Edition, "Boron." U.S. Department of the Interior, Bureau of Mines. Washington, D.C., 1976.

10. Personal Communication: Mr. Sarkis Ampian, Bureau of Mines, Washington, D.C. and Darrel Powell, PEDCo-Environmental Specialists, Inc. April 27, 1976.

11. Survey of Current Business. U.S. Department of Commerce, Social and Economic Statistics Administration, Bureau of Economic Analysis. Volume 54, No. 7, July 1974.

REFERENCES (continued)

12. Preprint from Mineral Facts and Problems, 1975 Edition, "Diatomite." U.S. Department of the Interior, Bureau of Mines. Washington, D.C. 1976.

13. Personal Communication: Mr. Mike Potter, Bureau of Mines, Washington, D.C., and Darrel Powell, PEDCo-Environmental Specialists, Inc., April 28, 1976.

14. "Rock Products," Volume 77: p. 50, December 1974.

15. Preprint from Mineral Facts and Problems, 1975 Edition, "Gypsum." U.S. Department of the Interior, Bureau of Mines. Washington, D.C. 1976.

16. "Rock Products," Volume 77: p. 44, December 1974.

17. Personal Communication: Correspondence from A.C. Meisinger, Bureau of Mines, Washington, D.C., April 29, 1976.

18. Personal Communication: General Eggleston, National Slag Association, Alexandria, Virginia, and Darrel Powell, PEDCo-Environmental Specialists, Inc., May 14, 1976.

19. Personal Communication: Horace T. Reno, Bureau of Mines, Washington, D.C., and Darrel Powell, PEDCo-Environmental Specialists, Inc., May 14, 1976.

20. Preprint from Mineral Facts and Problems, 1975 Edition, "Vermiculite." U.S. Department of the Interior, Bureau of Mines. Washington, D.C., 1976.

21. "Rock Products," Volume 77: p. 45, December, 1974.

22. "Rock Products," Volume 77: p. 54, December, 1974.

23. "Rock Products," Volume 77: p. 48, December, 1974.

24. Preprint from Mineral Facts and Problems, 1975 Edition, "Sand and Gravel." U.S. Department of the Interior, Bureau of Mines. Washington, D.C., 1976.

25. Preprint from Mineral Facts and Problems, 1975 Edition, "Talc, Soapstone, and Pyrophyllite." U.S. Department of the Interior, Bureau of Mines. Washington, D.C., 1976.

APPENDIX B

MODEL PLANT PROCESS WEIGHT DETERMINATION

PEDCo-ENVIRONMENTAL
SUITE 13 • ATKINSON SQUARE
CINCINNATI, OHIO 45246
513/771-4330

New Source Performance Standards

Project Number 3146-RR

Computation Sheet for Impact Assessment

Calculations Done by John Zoller Date 6-18-76

Source Model Plant Process Weight - Barite

MAXIMUM HOURLY CAPACITY, TON/HR	DATA SOURCE
2.5	NEDS
7.5	Engineering/Mining Journal (EMJ)
16.7	NEDS
11.9	Engineering/Mining Journal (EMJ)
3 Lines - 17.5 each	Plant visit, J. Edwinger, EPA
9.16	Industrial Minerals + Rocks, p. 437

"Average" Plant → $\frac{1{,}106{,}000 \text{ TONS PRODUCED/YR}}{37 \text{ PLANTS}} \times \frac{1}{6720 \text{ Hr/yr}} = 4.4 \frac{\text{tons}}{\text{plant-hr}}$

Model Plant → 15 ton/hr

Assume valid for all minerals:

$24 \frac{\text{hr}}{\text{day}} \times 7 \frac{\text{day}}{\text{wk}} \times 50 \frac{\text{wk}}{\text{yr}} \times 0.80 = 6720 \text{ hr/yr}$

where 0.80 is the percent of applied time.

PEDCo-ENVIRONMENTAL
SUITE 13 • ATKINSON SQUARE
CINCINNATI, OHIO 45246
513/771-4330

New Source Performance Standards

Project Number 3146-RR

Computation Sheet for Impact Assessment

Calculations Done by John Zoller Date 6-18-76

Source Model Plant Process Weight - Boron

MAXIMUM HOURLY CAPACITY, TON/HR	DATA SOURCE
420	PLANT VISIT, J. EDDINGER, EPA

NOTE: this plant accounts for nearly all borates produced by dry processing.

Model Plant → 420 ton/hr

PEDCo-ENVIRONMENTAL
SUITE 13 • ATKINSON SQUARE
CINCINNATI, OHIO 45246
513/771-4330

New Source Performance Standards

Project Number 3146-RR

Computation Sheet for Impact Assessment

Calculations Done by John Zoller Date 6-18-76

Source Model Plant Process Weight - Clay

	Maximum Hourly Capacity, Ton/Hr	Data Source
Common Clay	10.0	EMJ
	16.7	EMJ
	29.2	EMJ
	9.5	EMJ
Fullers Earth	50.0	EMJ
Fire Clay	1.3	EMJ
	14.6	EMJ
Ball Clay	10.0	EMJ
	20.8	EMJ
	24.2	EMJ
	18.8	EMJ
Bentonite	25.0	EMJ
	18.8	EMJ
	41.7	EMJ
	25.0	EMJ
	75.0	EMJ
	40.0	EMJ
Kaolin	3.3	EMJ
	8.3	EMJ
	41.7	EMJ
	36.5	EMJ
	17.7	EMJ

PEDCo-ENVIRONMENTAL
SUITE 13 • ATKINSON SQUARE
CINCINNATI, OHIO 45246
513/771-4330

New Source Performance Standards

Project Number 3146-RR

Computation Sheet for Impact Assessment

Calculations Done by John Zoller Date 6-18-76

Source Model Plant Process Weight - Clay (continued)

	Maximum Hourly Capacity, Ton/Hr	Data Source
Kaolin (cont.)	12.5	EMJ
	45.8	EMJ
	58.3	EMJ
	8.3	EMJ
	16.7	EMJ
	83.3	EMJ

"Average" Plant → $\frac{50,900,000 \text{ tons produced/yr}}{1718 \text{ plants}} \times \frac{1}{6720 \text{ hr/yr}} = 4.4 \frac{\text{tons}}{\text{plant-hr}}$

Model Plant → 30 ton/hr

PEDCo-ENVIRONMENTAL
SUITE 13 • ATKINSON SQUARE
CINCINNATI, OHIO 45246
513/771-4330

New Source Performance Standards

Project Number 3146-RR

Computation Sheet for Impact Assessment

Calculations Done by John Zoller Date 6-18-76

Source Model Plant Process Weight - Diatomite

Maximum Hourly Capacity, Ton/Hr	Data Source
66.7	Plant Visit, J. EDDINGER, EPA
10.0	per J. EDDINGER, EPA
10.0	per J. EDDINGER, EPA
20.0	per J. EDDINGER, EPA

"Average" Plant → $\frac{567{,}000 \text{ tons produced/yr}}{17 \text{ plants}} \times \frac{1}{6720 \text{ hr/yr}} = 5.0 \frac{\text{tons}}{\text{plant-hr}}$

Model Plant → 20 ton/hr

PEDCo-ENVIRONMENTAL
SUITE 13 • ATKINSON SQUARE
CINCINNATI, OHIO 45246
513/771-4330

New Source Performance Standards

Project Number 3146-RR

Computation Sheet for Impact Assessment

Calculations Done by JOHN ZOLLER Date 6-18-76

Source MODEL PLANT PROCESS WEIGHT - Feldspar

MAXIMUM HOURLY CAPACITY, TON/HR	DATA SOURCE
20.8	1970 MFP
16.7	NEDS
35.4	NEDS

"Average" Plant → $\frac{685{,}000 \text{ tons produced/yr}}{7 \text{ plants}} \times \frac{1}{6720 \text{ hr/yr}} = 14.6 \frac{\text{tons}}{\text{plant-hr}}$

Model Plant → 20 tons/hr

PEDCo-ENVIRONMENTAL
SUITE 13 • ATKINSON SQUARE
CINCINNATI, OHIO 45246
513/771-4330

New Source Performance Standards

Project Number 3146-RR

Computation Sheet for Impact Assessment

Calculations Done by John Zoller Date 6-18-76

Source Model Plant Process Weight - Gypsum

MAXIMUM HOURLY CAPACITY, TON/HR	DATA SOURCE
20.8	EMJ
8.3	EMJ
22.9	Meeting with F. Rogers, Gypsum Assn.

"Average" Plant → $\frac{12{,}000{,}000 \text{ tons produced/yr}}{75 \text{ plants}} \times \frac{1}{6720 \text{ hr/yr}} = 23.8 \frac{\text{tons}}{\text{plant-hr}}$

Model Plant → 25 ton/hr

PEDCo-ENVIRONMENTAL
SUITE 13 • ATKINSON SQUARE
CINCINNATI, OHIO 45246
513/771-4330

New Source Performance Standards

Project Number 3146-RQ

Computation Sheet for Impact Assessment

Calculations Done by John Zoller Date 6-18-76

Source Model Plant Process Weight - Lightweight Aggregate - Perlite

MAXIMUM HOURLY CAPACITY, TON/HR	DATA SOURCE
55.0	Plant Visit, J. EDDINGER, EPA
16.7	NEDS

"Average" Plant → $\frac{759{,}000 \text{ tons produced/yr}}{12 \text{ plants}} \times \frac{1}{6720 \text{ hr/yr}} = 9.4 \frac{\text{tons}}{\text{plant-hr}}$

Model Plant → 30 ton/hr

PEDCo-ENVIRONMENTAL
SUITE 13 • ATKINSON SQUARE
CINCINNATI, OHIO 45246
513/771-4330

New Source Performance Standards

Project Number 3146-RR

Computation Sheet for Impact Assessment

Calculations Done by John Zoller Date 6-18-76

Source Model Plant Process Weight - Lightweight Aggregate - Slag

Maximum Hourly Capacity, Ton/Hr	Data Source
200	NEDS
600	NEDS
350	NEDS
13	NEDS

Model Plant → 300 ton/hr

PEDCo-ENVIRONMENTAL
SUITE 13 • ATKINSON SQUARE
CINCINNATI, OHIO 45246
513/771-4330

New Source Performance Standards

Project Number 3146-RE

Computation Sheet for Impact Assessment

Calculations Done by John Zoller Date 6-18-76

Source Model Plant Process Weight - Lightweight Aggregate - Vermiculite

MAXIMUM HOURLY CAPACITY, TON/HR	DATA SOURCE
50.0	EMJ
150.0	EMJ

"Average" Plant → $\frac{340\,000 \text{ tons produced/yr}}{2 \text{ plants}} \times \frac{1}{6720 \text{ hr/yr}} = 25.3 \frac{\text{tons}}{\text{plant-hr}}$

PEDCo-ENVIRONMENTAL
SUITE 13 • ATKINSON SQUARE
CINCINNATI, OHIO 45246
513/771-4330

New Source Performance Standards

Project Number 3146-RR

Computation Sheet for Impact Assessment

Calculations Done by John Zoller Date 6-18-76

Source Model Plant Process Weight - Pumice

MAXIMUM HOURLY CAPACITY, TON/HR	DATA SOURCE
33.3	EMJ
5.0	Plant visit, J. EDDINGER, EPA

"Average" Plant → $\frac{4\,100\,000 \text{ tons Product/yr}}{289 \text{ plants}} \times \frac{1}{6720 \text{ hr/yr}} = 2.1 \frac{\text{tons}}{\text{plant-hr}}$

Model Plant → 10 ton/hr

PEDCo-ENVIRONMENTAL
SUITE 13 • ATKINSON SQUARE
CINCINNATI, OHIO 45246
513/771-4330

New Source Performance Standards

Project Number 3146-RR

Computation Sheet for Impact Assessment

Calculations Done by John Zoller Date 6-18-76

Source Model Plant Process Weight - Sand + Gravel

MAXIMUM HOURLY CAPACITY, TON/HR	DATA SOURCE
1000	plant visit, J. Zoller, PEDCo (1,500,000 tons/yr)
375	plant visit, J. Zoller, PEDCo (300,000 tons/yr)

Also:

30% of all plants produce < 200,000 tons/yr → 4,496 plants

30% of all plants produce 200,000 to 500,000 tons/yr → 814 plants

40% of all plants produce >500,000 tons/yr → 371 plants

total plants → 5,681 plants

above are assume to operate 1000 hr/yr

from observation ∴

Model Plant → 100 ton/hr

PEDCo-ENVIRONMENTAL
SUITE 13 • ATKINSON SQUARE
CINCINNATI, OHIO 45246
513/771-4330

New Source Performance Standards

Project Number 3146-RR

Computation Sheet for Impact Assessment

Calculations Done by JOHN ZOLLER Date 6-18-76

Source MODEL PLANT PROCESS WEIGHT - Talc + Soapstone

MAXIMUM HOURLY CAPACITY, TON/HR	DATA SOURCE
11.5	1973 MY
8.3	1973 MY
18.8	1973 MY
2.3	EMJ
4.3	EMJ
8.1	EMJ
16.7	EMJ
12.5	plant visit, J. EDDINGER, EPA

"Average" Plant → $\frac{1100000 \text{ tons produced/yr}}{35 \text{ plants}} \times \frac{1}{6720 \text{ hr/yr}} = 4.7 \frac{\text{ton}}{\text{plant-hr}}$

Model Plant → 10 ton/hr

APPENDIX C

CONTROL DEVICE FLOW RATE REQUIREMENTS

APPENDIX C

CONTROL DEVICE FLOW RATE REQUIREMENTS

Belt Conveyor Transfer

The criteria used to determine the air flow requirements for dust collection from belt conveyor transfer points are:

a) 350 cfm/ft belt width for belt speeds less than 200 ft/min,
b) 500 cfm/ft belt width for belt speeds greater than 200 ft/min.

Belts smaller than 1.5 ft wide are not used in the minerals industry. This size belt (1.5 ft) will accomodate 100 tons/hr at 200 ft/min, unless the material being conveyed has not been through the primary crusher. In the latter event, the air requirements are derived from criterion (b). This air volume exceeds the minimum required to convey dust a distance of 250 ft. in a vacuum system (4.5 scf/lb dust maximum volume needed for pneumatic conveying). Therefore, the air flow requirement for belt transfer points is:

(1.5 ft belt width) (350 cfm/ft belt width) = 525 cfm

Bin Openings

The air flow requirement for dust collection from bin discharge openings is 200 ft/min through openings.

Minimum bin opening (width) = (3) (largest lump size)
= (3) (16 inches) = 48 inches = 4 ft

Bin discharge with feeder opening has

air flow requirement
= (width of bin opening, ft) (1.25) (200 ft/min)
= (4 ft) (1.25) (200 ft/min) = 1000 acfm

where

1.25 is a factor based on engineering judgement to account for the difference in the areas of the bin and feeder openings.

Bin discharge with feeder grizzly (see "Grizzly")

Storage Bin receiving opening has

air flow requirement

= (2)(volume of raw material flow into bin) + (one conveyor transfer air flow requirement)

Assume a mineral density of 80 lb/ft^3 entering storage bin at a maximum rate of 100 tons/hr. Therefore, volume of displaced air equals

$$\left(100 \frac{\text{tons}}{\text{hr}}\right)\left(2000 \frac{\text{lb}}{\text{ton}}\right)\left(\frac{\text{ft}^3}{80\ \text{lb}}\right)\left(\frac{\text{hr}}{60\ \text{min}}\right) = 41.7\ \text{cfm}$$

Air flow requirements due to displacement = (2) (41.7) = 83.4 cfm. This requirement is negligible compared to the conveyor transfer air flow requirement of 525 cfm. Therefore, the air flow requirement for storage bin openings is equivalent to that for conveyor transfers.

Grizzly (and Feeder)

The air flow requirement for dust collection from a grizzly is 200 cfm/ft^2 of screen. Grizzly width = grizzly length = nominal bin opening width = 4 ft.

air flow requirements (same as for shakeouts[1])

= (grizzly area) (200 cfm/ft^2 grizzly area)
= (4 ft) (4 ft) (200 cfm/ft^2 grizzly area)
= 3200 cfm

Vibrating Screen

The air flow requirements for dust collection from a vibrating screen having 1/4 inch perforations (30% open area) are:

a) (200 ft/min thru openings) (0.30) (1 ft^2/1 ft^2) = 60 cfm/ft^2 of screen area,

b) a minimum of 25 cfm/ft^2 of screen area.

The predominant demand is (a) which, based on engineering judgement, will be reduced to 50 cfm/ft^2 of screen area to account for solids.[1]

Screens are sized on the basis of "thru" material (-1/4 inch) present, which is assumed to be a maximum of 60% of the feed material.

Raw feed (tons/hr)	Thru material (tons/hour)	Approximate screen area (ft^2)	Screen size (feet)	Screen area (ft^2)	Flow rate (cfm)
5	3	4.2	2 x 4	8	400
15	9	12.5	3 x 4	12	600
25	15	20.8	3 x 8	24	1200
50	30	41.6	5 x 8	40	2000
100	60	83.3	6 x 14	84	4200

1. Danielson, J.A. (Editor). Air Pollution Engineering Manual. Cincinnati, U.S. Department of Health, Education, and Welfare, 1967. AP-40. 892 p.

AIR FLOW REQUIREMENTS FOR CONTROL DEVICES ON CRUSHERS,

LUMPSIZE 16 x 2 1/2 TO 2 1/2 x 0

	Process Weight, tons/hr														
	5			15			25			50			100		
	Size of feed inlet (inches)	Area of inlet (ft^2)	Flow rate (acfm)	Size of feed inlet (inches)	Area of inlet (ft^2)	Flow rate (acfm)	Size of feed inlet (inches)	Area of inlet (ft^2)	Flow rate (acfm)	Size of feed inlet (inches)	Area of inlet (ft^2)	Flow rate (acfm)	Size of feed inlet (inches)	Area of inlet (ft^2)	Flow rate (acfm)
Jaw[a]	10 x 21	1.5	375	10 x 21	1.5	375	10 x 21	1.5	375	10 x 30	2.1	525	15 x 38	4.0	1000
Gyrotory[a]	13 x 59	5.3	1325	13 x 59	5.3	1325	13 x 59	5.3	1325	13 x 59	5.3	1325	13 x 59	5.3	1325
Single roll[a]	24 x 30	5.0	1250	24 x 30	5.0	1250	24 x 30	5.0	1250	24 x 30	5.0	1250	24 x 30	5.0	1250
Hammermill[b]	8 x 20	1.1	550	8 x 31	1.7	850	8 x 38	2.1	1050	10 x 39	2.7	1350	15 x 68	6.9	3450
Ball/rod mill[c]	5 x 12	4.0	800	8 x 12	10.0	2000	9 x 12	12.75	2550	11 x 14	19.0	3800	12 x 16	22.6	4520

[a] Air flow requirements for jaw, gyrotory, and single roll crushers = (Area of opening) (250 fpm).

[b] Feed to hammermill constitutes 80% (4 x 1/4) of run of mines feed, maximum; i.e. (5 TPH)(.80) = 4 TPH, (15 TPH)(.80) = 12 TPH, etc.

Air flow requirements for Hammermills = (opening) (1000 cfm/ft^2 opening)

where opening = (area of inlet)/2.0 based on engineering judgement.

[c] Feed to rod or ball mill = 1/4 x 0 -100 mesh

Air flow requirements for rod or ball mills = (area of inlet)(200 cfm/ft^2 inlet area).

where area of inlet = ($\pi D^2/4$)(0.2) based on engineering judgement.
Size of feed inlet for ball and rod mills is given as diameter x length in feet rather than inches.

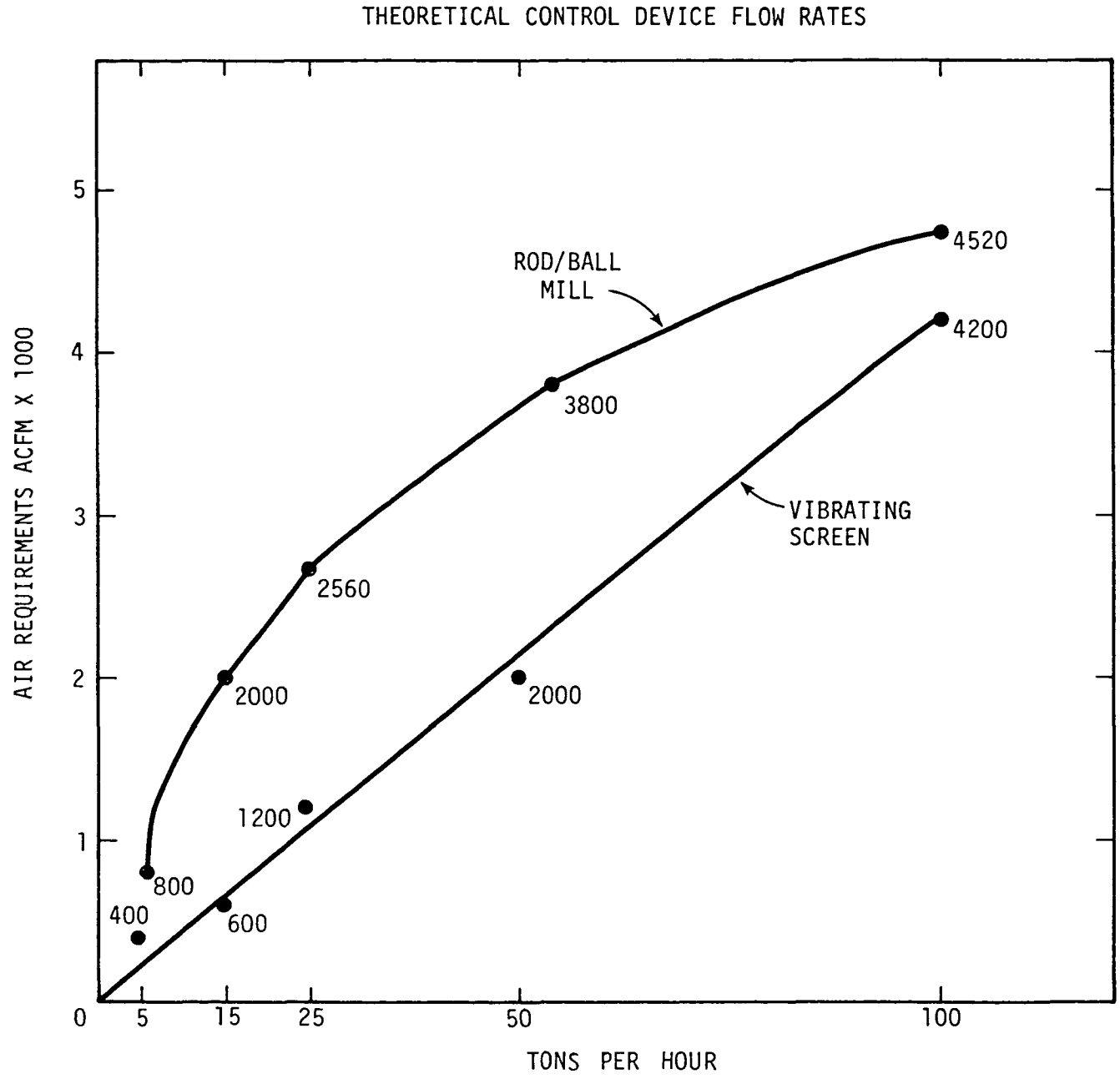
THEORETICAL CONTROL DEVICE FLOW RATES
AIR REQUIREMENTS ACFM X 1000
TONS PER HOUR
ROD/BALL MILL
VIBRATING SCREEN
0
1
2
3
4
5
5
15
25
50
100
4520
4200
3800
2560
2000
2000
1200
800
600
400

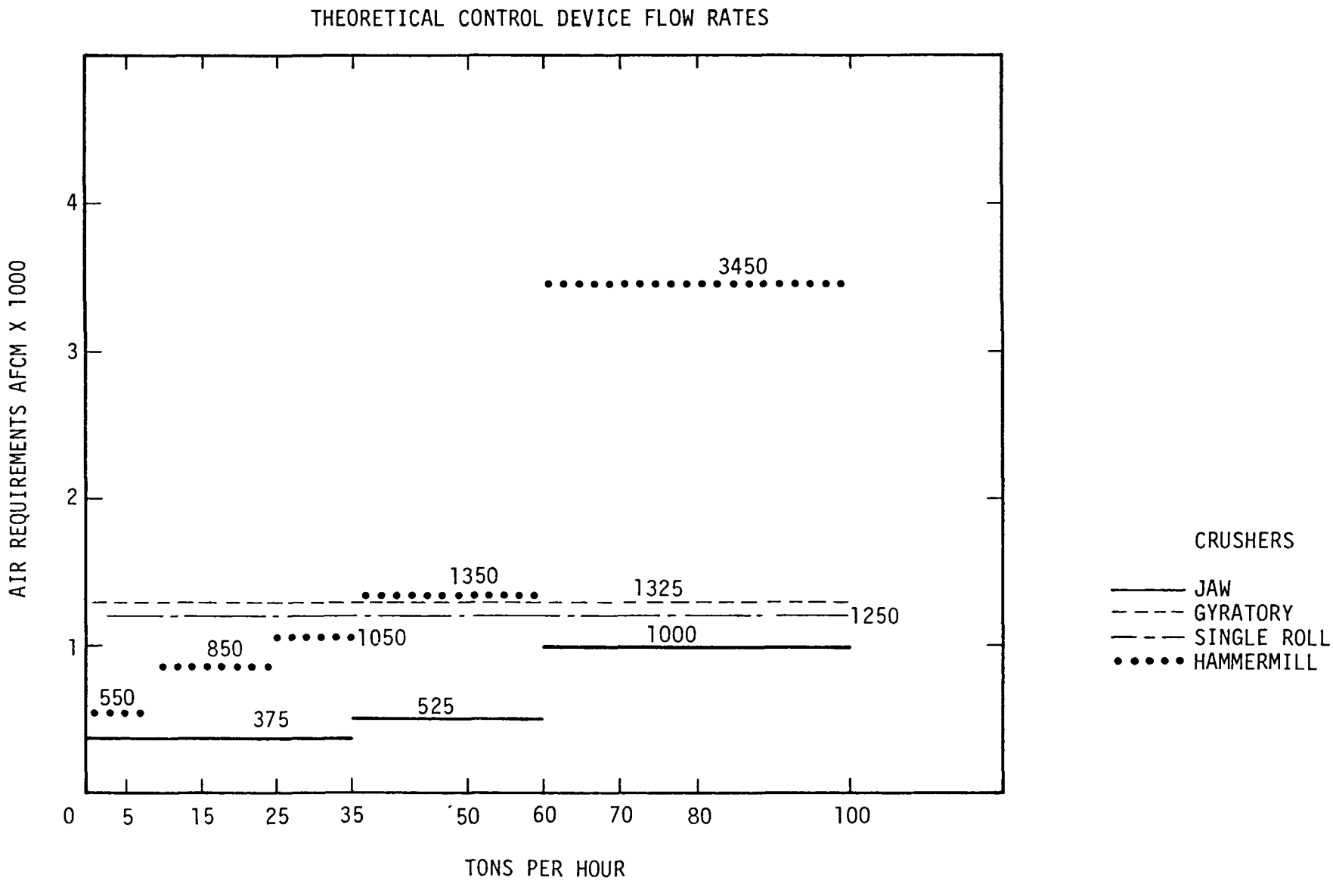
THEORETICAL CONTROL DEVICE FLOW RATES
AIR REQUIREMENTS AFCM X 1000
4
3
2
1
0
5
15
25
35
50
60
70
80
100
TONS PER HOUR
3450
1350
1325
1250
1050
1000
850
550
525
375
CRUSHERS
JAW
GYRATORY
SINGLE ROLL
HAMMERMILL

THEORETICAL CONTROL DEVICE FLOW RATES

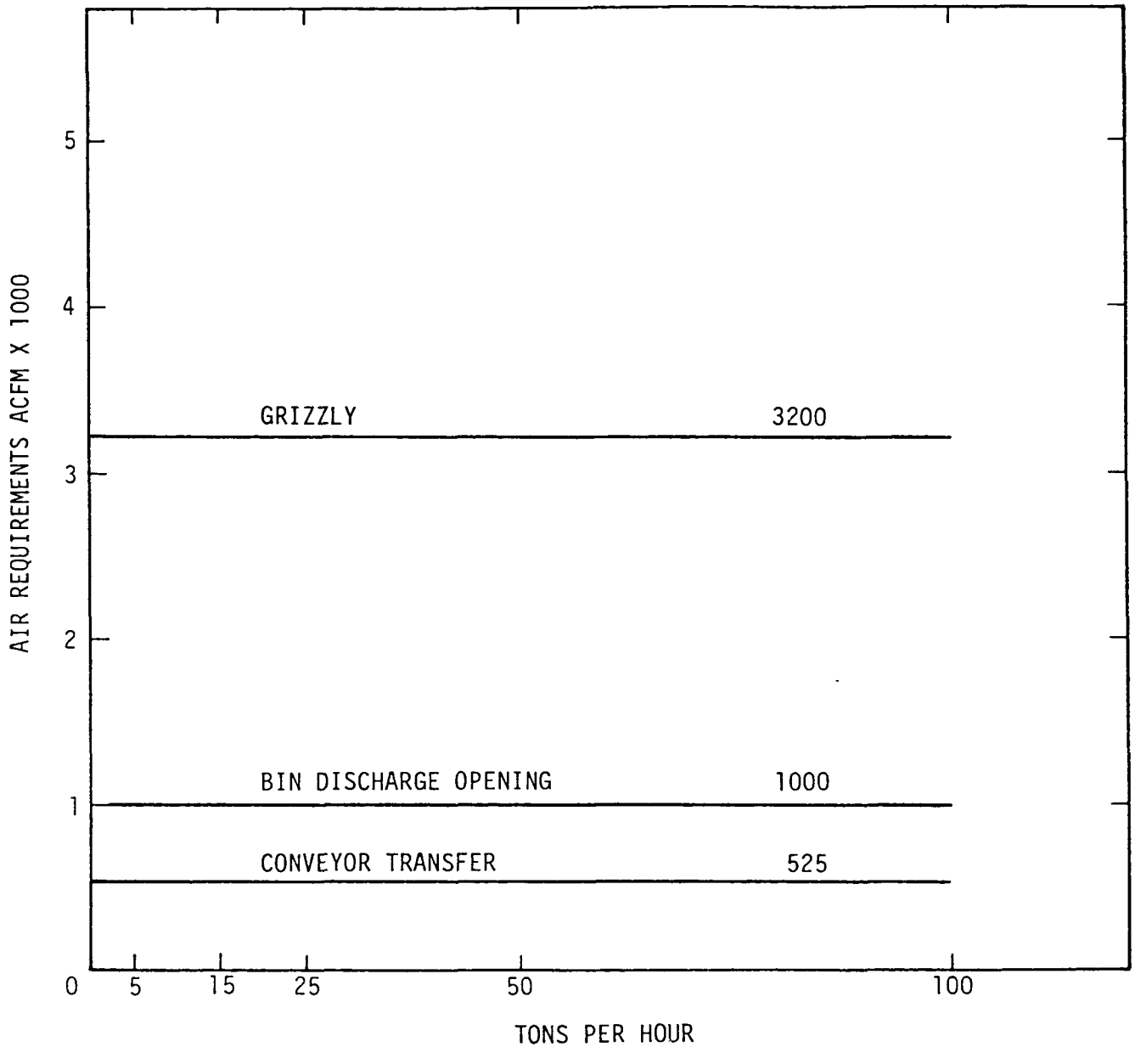

SIZE REDUCTION ASSUMPTIONS FOR FLOW RATE CALCULATIONS

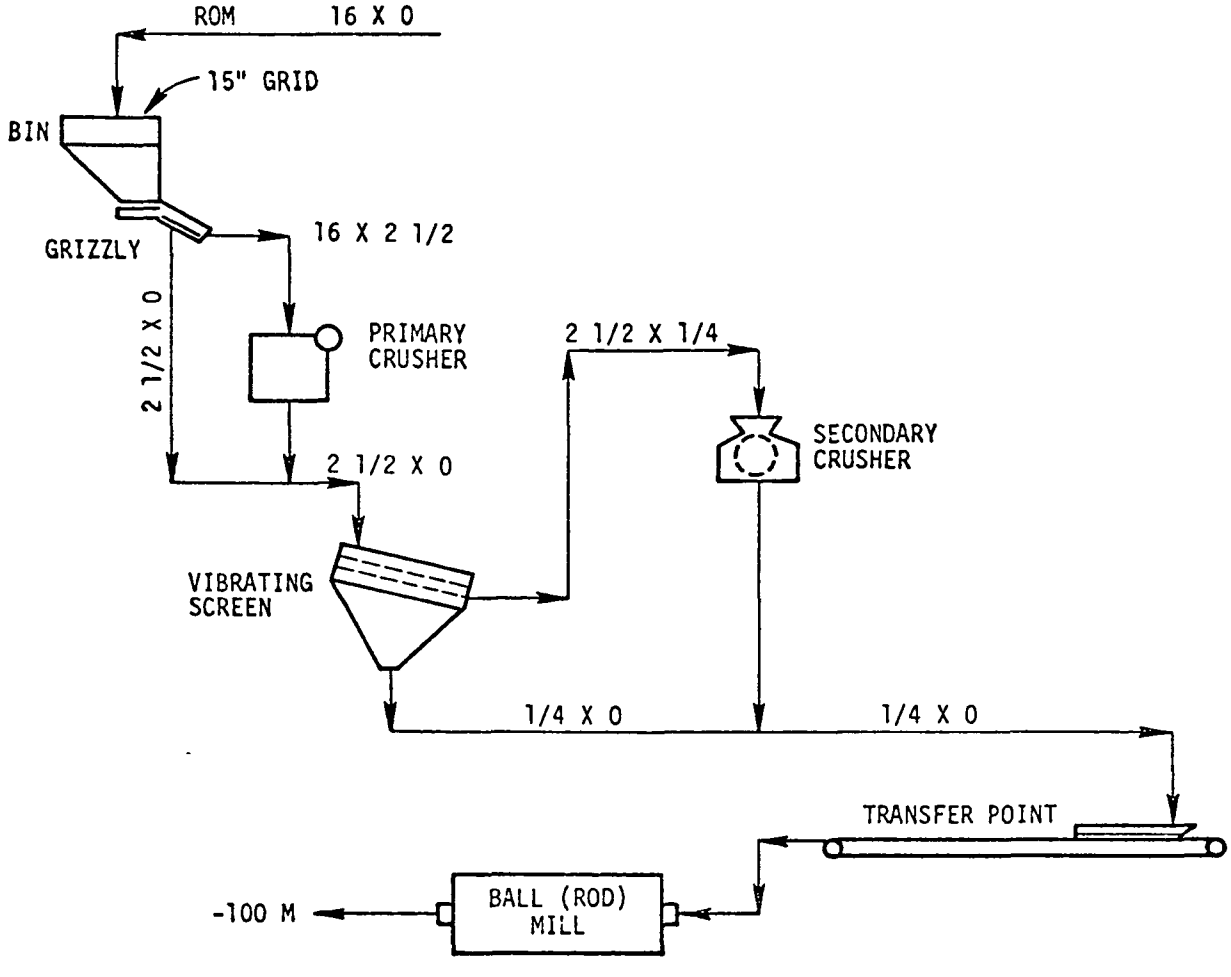

PEDCo-ENVIRONMENTAL
SUITE 13 • ATKINSON SQUARE
CINCINNATI, OHIO 45246
513/771-4330

New Source Performance Standards

Project Number 3146-RR

Computation Sheet for Impact Assessment

Calculations Done by JOHN ZOLLER Date 6-18-76

Source MODEL PLANT FLOW RATE FOR PLANTS > 100 TON/HR

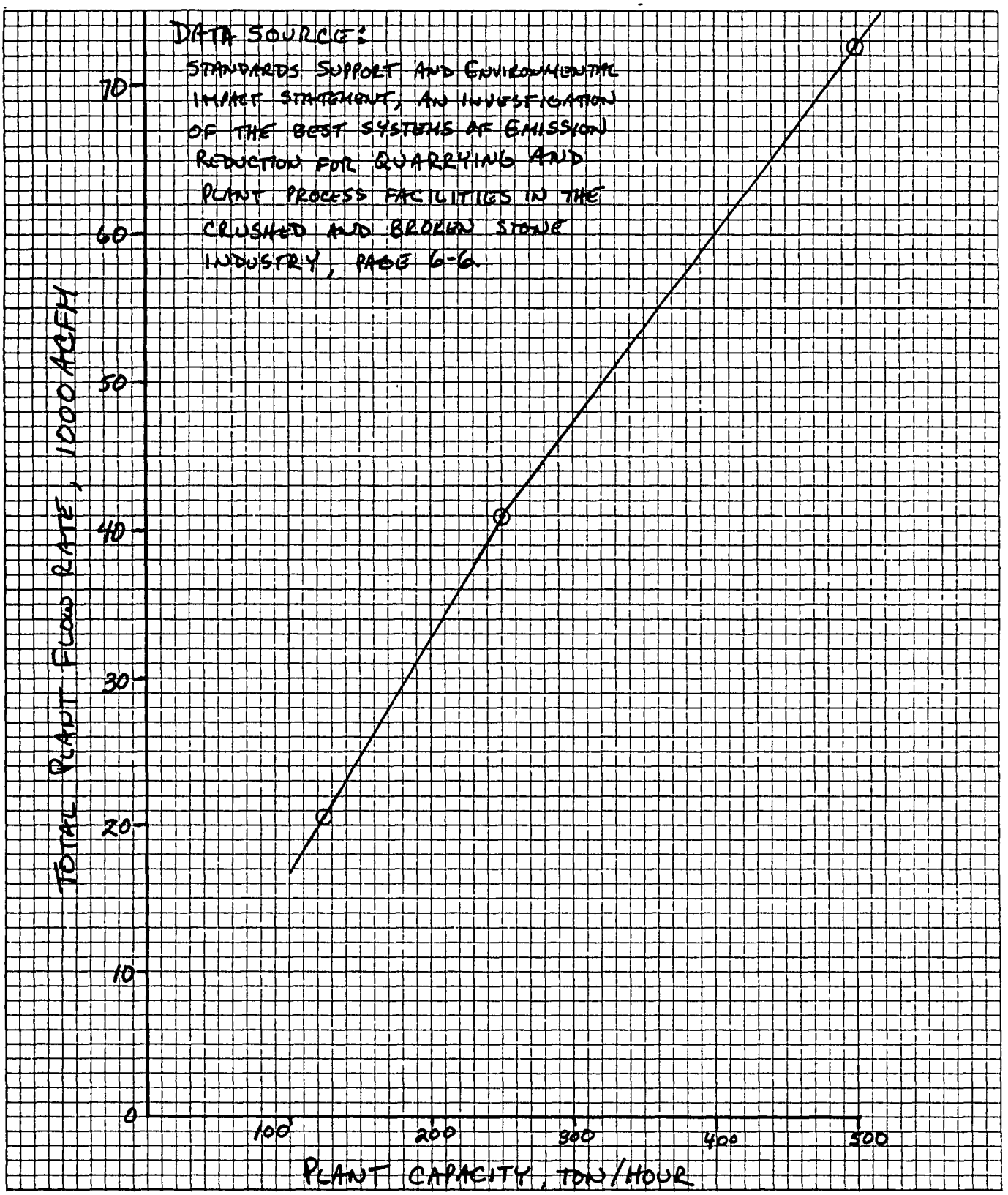

APPENDIX D

CALCULATION OF ALLOWABLE EMISSIONS

UNDER STATE REGULATIONS

SUITE 13 • ATKINSON SQUARE
CINCINNATI OHIO 45246
513/771-4330

New Source Performance Standards

Project Number 3146-RR

Computation Sheet for Impact Assessment

Calculations Done by STEPHEN OLDIGES Date JUNE 16, 1976

Source Barite

STATE	EQUATION	ALLOWABLE (lb/hr)	% PRODUCTION	WEIGHTED EMIS. (lb/hr)
NEVADA	$E=4.1\ P^{0.67}=$	25.2	68.5	17.3
MISSOURI	$E=4.1P^{0.67}=$	25.2	18.4	4.6
ARKANSAS	$E=3.59\ P^{0.62}=$	19.2	2.6	0.5
CALIFORNIA	TABLE 4-3	13.0	2.6	0.3
GEORGIA	$E=4.1\ P^{0.67}=$	25.2	2.6	0.7
IDAHO	$E=4.1\ P^{0.67}$	25.2	2.6	0.7
TENNESSEE	$E=3.59\ P^{0.62}$	19.2	2.6	0.5
			AVERAGE ALLOWABLE EMISSIONS FOR THE INDUSTRY	24.6

(P) MODEL PLANT PROCESS WEIGHT (ton/hr) = 15

1.64 $\frac{lb}{ton}$

PEDCO-ENVIRONMENTAL
SUITE 13 • ATKINSON SQUARE
CINCINNATI, OHIO 45246
513/771-4330

New Source Performance Standards

Project Number 3146-RR

Computation Sheet for Impact Assessment

Calculations Done by Bob Livingston Date JUNE 16, 1976

Source Borates

STATE	EQUATION	ALLOWABLE (lb/hr)	% PRODUCTION	WEIGHTED EMIS. (lb/hr)
CALIFORNIA (KERN CO)	$E = 17.31\ p^{0.16}$	45.50	100	45.50

AVERAGE ALLOWABLE EMISSIONS FOR THE INDUSTRY 45.50

(P) MODEL PLANT PROCESS WEIGHT (ton/hr) = 420 0.108 $\frac{lb}{ton}$

SUITE 13 • ATKINSON SQUARE
CINCINNATI, OHIO 45246
513/771-4330

New Source Performance Standards

Project Number 3146-RR

Computation Sheet for Impact Assessment

Calculations Done by Bob Livingston Date JULY 1, 1976

Source Clay

STATE	EQUATION	ALLOWABLE (lb/hr)	% PRODUCTION	WEIGHTED EMIS. (lb/hr)
GEORGIA	$E = 4.1 p^{0.67}$	40.0	12.6	5.0
TEXAS	$E = 2.54 p^{0.287}$	67.4	8.7	5.9
OHIO	$E = 4.1 p^{0.67}$	40.0	7.1	2.8
NORTH CAROLINA	$E = 4.1 p^{0.67}$	40.0	5.6	2.2
ALABAMA	AVG EQNS. a+b TABLE 4-1.	34.8	4.9	1.7
PENNSYLVANIA	CONCENTRATION REG.	2.7	4.5	0.1
OTHER	$E = 4.1 p^{0.67}$	40.0	56.6	22.6

AVERAGE ALLOWABLE EMISSIONS FOR THE INDUSTRY 40.3

(P) MODEL PLANT PROCESS WEIGHT (ton/hr) = 30

1.34 lb/ton

PEDCo-ENVIRONMENTAL
SUITE 13 • ATKINSON SQUARE
CINCINNATI, OHIO 45246
513/771-4330

New Source Performance Standards

Project Number 3146-RR

Computation Sheet for Impact Assessment

Calculations Done by Bob Livingston Date June 16, 1976

Source Clay

PENNSYLVANIA

IND. PROC. REG. EQN $E = 0.76\ p^{0.42}$

$p = 30$ tons $= 60000$ lb

$E = 77.2$ lb/hr

Conc. Reg 0.02 grains/SCF

MODEL PLANT FLOW RATE ~~16435~~ 15575 ACFM

$$0.02 \times \frac{\cancel{16435}\ 15575}{} \times 60 \times \frac{1}{7000} = \frac{\cancel{2.8}\ 2.7}{} \text{ lb/hr}$$

use more stringent regulation as allowable emissions ~~2.8~~ 2.7

ALABAMA

Has approximately an equal number of Class I and Class 2 counties therefore the regulations used for allowable emissions was an average of the regulations from each type of county.

SUITE 13 • ATKINSON SQUARE
CINCINNATI OHIO 45246
513/771-4330

New Source Performance Standards

Project Number 3146-RR

Computation Sheet for Impact Assessment

Calculations Done by STEPHEN OLDIGES Date JUNE 16, 1976

Source Diatomite

STATE	EQUATION	ALLOWABLE (lb/hr)	% PRODUCTION	WEIGHTED EMIS. (lb/hr)
CALIFORNIA	TABLE 4-3	13.9	20	2.8
KANSAS	$E = 4.1\ P^{0.67}$	30.5	20	6.1
NEVADA	$E = 4.1\ P^{0.67}$	30.5	20	6.1
OREGON	concentration reg.	~~5.3~~ 6.6	20	~~1.1~~ 1.3
WASHINGTON	concentration reg	~~5.3~~ 6.6	20	~~1.1~~ 1.3
			AVERAGE ALLOWABLE EMISSIONS FOR THE INDUSTRY	~~17.2~~ 17.8

(P) MODEL PLANT PROCESS WEIGHT (ton/hr) = 20

0.88

~~0.86~~ lb/ton

PEDCo-ENVIRONMENTAL
SUITE 13 • ATKINSON SQUARE
CINCINNATI, OHIO 45246
513/771-4330

New Source Performance Standards

Project Number 3146-RR

Computation Sheet for Impact Assessment

Calculations Done by Bob Livingston Date June 16, 1976

Source Diatomite

Oregon

IND. PROC. REG. EQN. $E = 55.0\,P^{0.11} - 40.$

$P = 20$

$E = 36.5$ lb/hr

Conc. Reg. 0.1 grains/SCF

MODEL PLANT FLOW RATE ~~6200~~ 7675 ACFM

$0.1 \times \frac{\cancel{6200}\ 7675}{} \times 60 \times \frac{1}{7000} = \cancel{5.3}\ 6.6$ lb/hr

use more stringent regulation as allowable emissions ~~5.3~~ 6.6

WASHINGTON

same concentration reg. as Oregon.

SUITE 13 • ATKINSON SQUARE
CINCINNATI OHIO 45246
513/771-4330

New Source Performance Standards

Project Number 3146-RR

Computation Sheet for Impact Assessment

Calculations Done by STEPHEN OLDIGES Date JUNE 16, 1976

Source Feldspar

STATE	EQUATION	ALLOWABLE (lb/hr)	% PRODUCTION	WEIGHTED EMIS. (lb/hr)
NORTH CAROLINA	$E=4.1\,P^{0.67}$	30.5	50	15.3
CONNECTICUT	$E=3.59\,P^{0.62}$	23.0	10	2.3
GEORGIA	$E=4.1\,P^{0.67}$	30.5	10	3.1
CALIFORNIA	TABLE 4-3	13.9	10	1.4
SOUTH DAKOTA	$E=4.1\,P^{0.67}$	30.5	10	3.1
OTHER	$E=4.1\,P^{0.67}$	30.5	10	3.1
			AVERAGE ALLOWABLE EMISSIONS FOR THE INDUSTRY	28.3

(P) MODEL PLANT PROCESS WEIGHT (ton/hr) = 20

1.42 $\frac{lb}{ton}$

SUITE 13 • ATKINSON SQUARE
CINCINNATI, OHIO 45246
513/771-4330

New Source Performance Standards

Project Number 3146-RR

Computation Sheet for Impact Assessment

Calculations Done by STEPHEN OLDIGES Date JUNE 16, 1976

Source Gypsum

STATE	EQUATION	ALLOWABLE (lb/hr)	% PRODUCTION	WEIGHTED EMIS. (lb/hr)
CALIFORNIA	TABLE 4-3	14.7	14.8	2.2
MICHIGAN	$E=4.1\,P^{0.67}$ =	35.4	12.5	4.4
IOWA	$E=4.1\,P^{0.67}$ =	35.4	12.3	4.4
TEXAS	$E=25.4\,P^{0.287}$	64.0	11.2	7.2
OKLAHOMA	$E=4.1\,P^{0.67}$ =	35.4	10.5	3.7
OTHER	$E=4.1\,P^{0.67}$ =	35.4	38.7	13.7

AVERAGE ALLOWABLE EMISSIONS FOR THE INDUSTRY 35.6

(P) MODEL PLANT PROCESS WEIGHT (ton/hr) = 25 1.42 lb/ton

SUITE 13 • ATKINSON SQUARE
CINCINNATI OHIO 45246
513/771-4330

New Source Performance Standards

Project Number 3146-RR

Computation Sheet for Impact Assessment

Calculations Done by Bob Livingston Date JUNE 16, 1976

Source Perlite

STATE	EQUATION	ALLOWABLE (lb/hr)	% PRODUCTION	WEIGHTED EMIS. (lb/hr)
NEW MEXICO	TABLE 4-5	31.0	85	26.35
ARIZONA	$E = 4.1p^{0.67}$	40.0	3	1.20
CALIFORNIA	TABLE 4-3	15.3	3	0.46
COLORADO	$E = 3.59p^{0.62}$	30.0	3	0.90
IDAHO	$E = 4.1p^{0.67}$	40.0	3	1.20
NEVADA	$E = 4.1p^{0.67}$	40.0	3	1.20

AVERAGE ALLOWABLE EMISSIONS FOR THE INDUSTRY: 31.31

(P) MODEL PLANT PROCESS WEIGHT (ton/hr) = 30

1.04 lb/ton

SUITE 13 • ATKINSON SQUARE
CINCINNATI OHIO 45246
513/771-4330

New Source Performance Standards

Project Number 3146-RR

Computation Sheet for Impact Assessment

Calculations Done by Bob Livingston Date JUNE 16, 1976

Source Slag

STATE	EQUATION	ALLOWABLE (lb/hr)	% PRODUCTION	WEIGHTED EMIS. (lb/hr)
PENNSYLVANIA	Concentration reg.	8.1	23	1.86
OHIO	$E = 55.0 P^{0.11} - 40$	63.0	21	13.23
ILLINOIS	$E = 2.54 P^{0.534}$	53.4	7	3.74
INDIANA	$E = 55.0 P^{0.11} - 40$	63.0	7	4.41
MICHIGAN	$E = 55.0 P^{0.11} - 40$	63.0	7	4.41
OTHER	$E = 55.0 P^{0.11} - 40$	63.0	35	22.05
			AVERAGE ALLOWABLE EMISSIONS FOR THE INDUSTRY	49.70

(P) MODEL PLANT PROCESS WEIGHT (ton/hr) = 300

0.166 $\frac{lb}{ton}$

PEDCo-ENVIRONMENTAL
SUITE 13 • ATKINSON SQUARE
CINCINNATI, OHIO 45246
513/771-4330

New Source Performance Standards

Project Number 3146-RR

Computation Sheet for Impact Assessment

Calculations Done by Bob Livingston Date June 16, 1976

Source Slag

PENNSYLVANIA

IND. PROC. REG. EQN. $E = 0.76\ P^{0.42}$

$P = 300 \text{ tons} = 600{,}000 \text{ lb}$

$E = 203.1 \text{ lb/hr}$

Conc. Reg 0.02 grains/SCF

MODEL PLANT FLOW RATE 47500

$0.02 \times 47500 \times 60 \times \frac{1}{7000} = 8.1 \text{ lb/hr}$

use more stringent of allowable emissions 8.1

SUITE 13 • ATKINSON SQUARE
CINCINNATI, OHIO 45246
513/771-4330

New Source Performance Standards

Project Number 3146-RR

Computation Sheet for Impact Assessment

Calculations Done by Bob Livingston Date JUNE 16, 1976

Source Vermiculite

STATE	EQUATION	ALLOWABLE (lb/hr)	% PRODUCTION	WEIGHTED EMIS. (lb/hr)
MONTANA	$E = 55.0p^{0.11} - 40$	48.43	75	36.33
SOUTH CAROLINA	$E = 55.0p^{0.11} - 40$	48.43	25	12.10

AVERAGE ALLOWABLE EMISSIONS FOR THE INDUSTRY 48.43

(p) MODEL PLANT PROCESS WEIGHT (ton/hr) = 75 0.646 lb/ton

SUITE 13 • ATKINSON SQUARE
CINCINNATI, OHIO 45246
513/771-4330

New Source Performance Standards

Project Number 3146-RR

Computation Sheet for Impact Assessment

Calculations Done by Bob Livingston Date JUNE 16, 1976

Source Pumice

STATE	EQUATION	ALLOWABLE (lb/hr)	% PRODUCTION	WEIGHTED EMIS. (lb/hr)
OREGON	$E = 55.0\ p^{0.11} - 40$	30.9	22	6.80
CALIFORNIA	TABLE 4-3	11.8	22	2.60
ARIZONA	$E = 4.1\ p^{0.67}$	19.2	20	3.84
NEW MEXICO	TABLE 4-5	15.0	10	1.50
HAWAII	$E = 4.1\ p^{0.67}$	19.2	9	1.73
IDAHO	$E = 4.1\ p^{0.67}$	19.2	9	1.73
OTHER	$E = 4.1\ p^{0.67}$	19.2	8	1.54
		AVERAGE ALLOWABLE EMISSIONS FOR THE INDUSTRY		19.74

(p) MODEL PLANT PROCESS WEIGHT (ton/hr) = 10

1.97 lb/ton

PEDCO-ENVIRONMENTAL
SUITE 13 • ATKINSON SQUARE
CINCINNATI OHIO 45246
513/771-4330

New Source Performance Standards

Project Number 3146-RR

Computation Sheet for Impact Assessment

Calculations Done by Bob Livingston Date JUNE 16, 1976

Source Sand + Gravel

STATE	EQUATION	ALLOWABLE (lb/hr)	% PRODUCTION	WEIGHTED EMIS. (lb/hr)
ALASKA	CONCENTRATION REG.	~~10.4~~ 8.0	12	~~1.25~~ 0.96
CALIFORNIA	TABLE 4-3	20.4	11	2.24
MICHIGAN	$E = 55.0\ p^{0.11} - 40$	51.3	6	3.08
ILLINOIS	$E = 2.54\ p^{0.534}$	29.7	5	1.49
TEXAS	$E = 25.4\ p^{0.287}$	95.2	4	3.81
OHIO	$E = 55.0\ p^{0.11} - 40$	51.3	4	2.05
OTHER	$E = 55.0\ p^{0.11} - 40$	51.3	58	29.75

AVERAGE ALLOWABLE EMISSIONS FOR THE INDUSTRY: ~~43.67~~ 43.38

(p) MODEL PLANT PROCESS WEIGHT (ton/hr) = 100

~~0.437~~ 0.434 lb/ton

PEDCo-ENVIRONMENTAL
SUITE 13 • ATKINSON SQUARE
CINCINNATI, OHIO 45246
513/771-4330

New Source Performance Standards

Project Number 3146-RR

Computation Sheet for Impact Assessment

Calculations Done by Bob Livingston Date June 16, 1976

Source Sand + Gravel

ALASKA

Conc. Reg. 0.05 grams/SCF

MODEL PLANT FLOW RATE ~~24350~~ 18600 ACFM

$$0.05 \times \frac{\cancel{24350}\ 18600}{} \times 60 \times \frac{1}{7000} = \cancel{10.4}\ 8.0 \text{ lb/hr}$$

PEDCO-ENVIRONMENTAL
SUITE 13 • ATKINSON SQUARE
CINCINNATI, OHIO 45246
513/771-4330

New Source Performance Standards

Project Number 3146-RR

Computation Sheet for Impact Assessment

Calculations Done by Bob Livingston Date JUNE 16, 1976

Source Talc + Soapstone

STATE	EQUATION	ALLOWABLE (lb/hr)	% PRODUCTION	WEIGHTED EMIS. (lb/hr)
VERMONT	TABLE 4-2	16.2	20	3.24
TEXAS	$E = 3.12\,p^{0.985}$	30.1	19	5.72
CALIFORNIA	TABLE 4-3	11.8	14	1.65
NORTH CAROLINA	$E = 4.1\,p^{0.67}$	19.2	8	1.54
GEORGIA	$E = 4.1\,p^{0.67}$	19.2	3	0.58
OTHER	$E = 4.1\,p^{0.67}$	19.2	36	6.91
			AVERAGE ALLOWABLE EMISSIONS FOR THE INDUSTRY	19.64

(p) MODEL PLANT PROCESS WEIGHT (ton/hr) = 10 — 1.96 $\frac{lb}{ton}$

APPENDIX E

INDUSTRY CAPACITY MODIFICATIONS

PEDCo-ENVIRONMENTAL
SUITE 13 • ATKINSON SQUARE
CINCINNATI, OHIO 45246
513/771-4330

New Source Performance Standards

Project Number 3146-RR

Computation Sheet for Impact Assessment

Calculations Done by JOHN ZOLLER Date 6-18-76

Source BORATES - DRY PROCESSING, PERCENT

THE BORAX RECOVERED FROM SEARLES LAKE, CALIFORNIA IS WET PROCESSED AND HAS LITTLE PARTICULATE EMISSIONS POTENTIAL. THEREFORE, THE MODEL PLANT AND IMPACT OF NSPS WERE CALCULATED FOR THE DRY PROCESSING OF BORATE ORE. THE CAPACITY FROM TABLE 1-1 WAS DIVIDED INTO % WET AND % DRY AS FOLLOWS:

(DATA FROM "INDUSTRIAL MINERALS AND ROCKS", PORT CITY PRESS) PAGE 479

COMPANY	PROCESS	APPROXIMATE CAPACITY, 1000 TONS B_2O_3/YR
U.S. BORAX	DRY	500,000
KERR-McGEE	WET	100,000
STAUFFER	WET	25-30,000
TENNECO	DRY	20-50,000
		680,000

$$\% \text{ DRY PROCESSING} = \frac{550{,}000}{680{,}000} \times 100 = 80\%$$

APPROXIMATE 1975 CAPACITY OF DRY PROCESSING BORATE ORE =

1,294,000 x 0.80 = 1,035,000 TONS BORATE ORE (CAPACITY)

PEDCo-ENVIRONMENTAL
SUITE 13 • ATKINSON SQUARE
CINCINNATI, OHIO 45246
513/771-4330

New Source Performance Standards

Project Number 3146-RR

Computation Sheet for Impact Assessment

Calculations Done by JOHN ZOLLER Date 6-18-76

Source SLAG - PERCENT CRUSHED AND SCREENED

TYPE OF SLAG	1974 PRODUCTION,[a] 1000 TONS	CRUSHED AND SCREENED
IRON-		
AIR COOLED		
SCREENED	25,557	YES
UNSCREENED	669	NO
GRANULATED	2,081	NO
EXPANDED	1,573	YES
STEEL-	8,862	YES
	38,742	

PERCENT OF 1974 PRODUCTION 1975 ~~CAPACITY~~ THAT IS CRUSHED AND SCREENED

$$\frac{35,992,000}{38,742,000} \times 100 = 93\%$$

THIS RELATIONSHIP WAS ASSUMED TO BE THE SAME FOR 1975 AND 1985 CAPACITY.

AMOUNT OF 1975 CAPACITY THAT IS CRUSHED AND SCREENED

50,314,000 TONS x 0.93 = 46,792,000 TONS CAPACITY SCREENED IN 1975.

a) MINERAL INDUSTRY SURVEY "SLAG-IRON AND STEEL IN 1974," U.S. DEPARTMENT OF THE INTERIOR, BUREAU OF MINES, WASHINGTON D.C., 1975.

APPENDIX F

LIST OF CONTACTS

Vendors			
Organization	Contact	Phone	Address
Allis-Chalmers	W. D. Meagher	(414) 734-9831	Box 2219 Appleton, Wisconsin 54911
Denver Equipment Div. Joy Manufacturing Co.	T. A. Gray	(303) 773-1133	Box 22598 Denver, Colorado 80222

Control Agencies Organization	Contact	Phone	Address
Kern County Air Pollution Control District	L. Landis T. Paxton	(805) 861-2111	Box 997 Bakersfield, California 93302
Michigan State Agency	C. G. Oviatt	(517) 373-7573	Air Quality Division Stevens T. Mason Bldg. Lansing, Michigan 48926
Georgia Department of Natural Resources	B. Harris	(404) 656-4713	Environmental Protection Div. Air Protection Branch 270 Washington Street, S.W. Atlanta, Georgia 30334
Nevada Department of Human Resources	H. Ricci	(702) 885-4670	Capital Complex Carson City, Nevada 89710
New Mexico Environmental Improvement Agency		(505) 827-5271	Box 2348 Santa Fe, New Mexico 87503
North Carolina Department of Natural and Economic Resources	T. C. Allen	(919) 829-4740	Box 27687 Raleigh, North Carolina 27611
Ohio Environmental Protection Agency	V. Fisher	(614) 466-7390	361 East Broad Street Columbus, Ohio 43216
Regional Air Pollution Control Agency	D. Redic	(513) 225-4435	451 W. Third Street Dayton, Ohio 45402
Oregon State Agency Department of Environmental Quality	J. Broad	(503) 229-5696	1234 S. W. Morrison Street Portland, Oregon 97205
South Carolina Department of Health and Environmental Control	K. W. Mason	(803) 758-5496	2600 Bull Street Columbia, South Carolina 29201
Texas Air Control Agency	J. Pennington	(512) 451-5711	8520 Shoal Creek Boulevard Austin, Texas 78758

Operating Companies			
Organization	Contact	Phone	Address
Building Materials and Gypsum Div. The Flintkote Company	E. F. Gordon	(702) 875-4111	Star Route 89031 Box 2900 Las Vegas, Nevada 89101
Ohio Gravel Div. Dravo Corporation	E. T. Kerr	(513) 321-2700	Cincinnati, Ohio 45226

Trade Associations			
Organization	Contact	Phone	Address
American Iron and Steel Institute	Mr. Platt	(202) 452-7100	1000 16th Street, N.W. Washington, D.C. 20036
National Slag Association	Mr. Lewis H. K. Eggleston	(703) 549-3111	300 S. Washington Street Alexandria, Virginia 22314
National Sand and Gravel Association	Mr. Davison	(301) 587-1400	900 Spring Street Silver Spring, Maryland 20910
Expanded Shale, Clay and Slate Institute	F. G. Erskine	(202) 783-1669	1041 National Press Building Washington, D.C.
Perlite Institute, Inc.	R. Milanese	(212) 265-2145	45 W. 45th Street New York, New York 10036
Lightweight Aggregate Producers Association	T. R. Berger	(215) 435-9687	546 Hamilton Street Allentown, Pennsylvania 18101
Gypsum Association	F. J. Rogers	(312) 491-1744	Suite 1210 1603 Orrington Ave. Evanston, Illinois 60201
Vermiculite Association	Mr. Regal	(404) 321-7994	52 Executive Park South Atlanta, Georgia 30329
Pit and Quarry Publication	J. G. Kostka	(312) 726-7151	105 Adams Street Chicago, Illinois 60603

Bureau of Mines Minerals	Contact	Phone	Address
Clay	S. Ampian	(202) 634-1180	Washington, D.C.
Boron	K. P. Wang	(202) 634-1177	Washington, D.C.
General	Mr. Josephson	(202) 634-1187	Washington, D.C.
Iron and Steel	H. Reno	(202) 634-1202	Washington, D.C.
Barite	S. Haines	(202) 634-1202	Washington, D.C.
Perlite, Pumice, and Diatomite	A. C. Meisinger	(202) 634-1202	Washington, D.C.
Talc, Soapstone, and Feldspar	M. Potter	(202) 634-1202	Washington, D.C.
Talc	R. Wells	(202) 634-1202	Washington, D.C.
Gypsum	A. Reed	(202) 634-1194	Washington, D.C.
Vermiculite	R. Singleton	(202) 634-1202	Washington, D.C.
General	T. A. Henrie	(202) 634-1305	Washington, D.C.

TECHNICAL REPORT DATA
(Please read Instructions on the reverse before completing)

1 REPORT NO	2	3 RECIPIENT'S ACCESSION NO

4 TITLE AND SUBTITLE	5 REPORT DATE
Background Information for the Non-Metallic Mineral Industry	August 31, 1976
	6 PERFORMING ORGANIZATION CODE
7 AUTHOR(S)	8 PERFORMING ORGANIZATION REPORT NO
Richard W. Gerstle, John M. Zoller and Fred D. Hall	
9 PERFORMING ORGANIZATION NAME AND ADDRESS	10 PROGRAM ELEMENT NO
PEDCo Environmental Specialists Suite 13, Atkinson Square Cincinnati, Ohio 45246	11 CONTRACT/GRANT NO 68-02-1321, T.O. 44
12 SPONSORING AGENCY NAME AND ADDRESS	13 TYPE OF REPORT AND PERIOD COVERED Final
Environmental Protection Agency Division of Stationary Source Enforcement Research Triangle Park, N.C. 27711	14 SPONSORING AGENCY CODE

15 SUPPLEMENTARY NOTES

DSSE project officer for this report is James Eddinger.

16 ABSTRACT

This study presents background information for the development of Federal New Source Performance Standards for processes handling 10 selected non-metallic minerals. The information applies to particulate emissions from mining, sizing, crushing, and handling operations. Processes involving heating are not addressed. Emissions are based on AP-42 emission factors and those for general stone crushing processes. Industry growth projections, plant listings, process descriptions, and control techniques are presented. To determine the potential impact of the proposed New Source Performance Standards on the non-metallic mineral industry, state emission regulations are surveyed and calculations are performed using a mathematical model which expresses the differential in atmospheric emissions that could be expected by 1985 both with and without the standards.

17 KEY WORDS AND DOCUMENT ANALYSIS

a DESCRIPTORS	b IDENTIFIERS/OPEN ENDED TERMS	c COSATI Field/Group
Mines	Mineral Mining	08I
Nonmetalliferous Minerals	Minerals	08G
Air Pollution	Emission Factors	13B
Dust	Particulates	11G
Standards	New Source Performance Standards	14G

18 DISTRIBUTION STATEMENT	19 SECURITY CLASS *(This Report)*	21 NO. OF PAGES
Unlimited	Unclassified	267
	20 SECURITY CLASS *(This page)* Unclassified	22 PRICE

EPA Form 2220-1 (9-73)