DRAFT DEVELOPMENT DOCUMENT

Including the Data Base for

EFFLUENT LIMITATIONS GUIDELINES (BATEA),

NEW SOURCE PERFORMANCE STANDARDS,

and

PRETREATMENT STANDARDS

for the

INORGANIC CHEMICALS MANUFACTURING

POINT SOURCE CATEGORY

Prepared for

Effluent Guidelines Division
Office of Water and Hazardous Materials
U.S. Environmental Protection Agency
Washington, D.C. 20460

Robert B. Schaffer, Director
Effluent Guidelines Division

G. E. Stigall, Acting Branch Chief
Inorganic Chemicals Branch

E. E. Martin
D. Hlustick
Project Officers

CONTRACT NO. 68-01-4492

BY

JACOBS ENGINEERING GROUP INC.
JACOBS ENVIRONMENTAL DIVISION
251 SOUTH LAKE AVENUE
PASADENA, CALIFORNIA 91101

APRIL 1979

DRAFT DEVELOPMENT DOCUMENT

Including the Data Base for

EFFLUENT LIMITATIONS GUIDELINES (BATEA),

NEW SOURCE PERFORMANCE STANDARDS,

and

PRETREATMENT STANDARDS

for the

INORGANIC CHEMICALS MANUFACTURING

POINT SOURCE CATEGORY

Prepared for

Effluent Guidelines Division
Office of Water and Hazardous Materials
U.S. Environmental Protection Agency
Washington, D.C. 20460

Robert B. Schaffer, Director
Effluent Guidelines Division

G. E. Stigall, Acting Branch Chief
Inorganic Chemicals Branch

E. E. Martin
D. Hlustick
Project Officers

CONTRACT NO. 68-01-4492

BY

JACOBS ENGINEERING GROUP INC.
JACOBS ENVIRONMENTAL DIVISION
251 SOUTH LAKE AVENUE
PASADENA, CALIFORNIA 91101

NOTICE

This document is a DRAFT CONTRACTOR'S REPORT. It includes technical information submitted by the Contractor to the United States Environmental Protection Agency (EPA) regarding the subject industry. It is being distributed for review and comment only. The report is not an official EPA publication and it has not been reviewed by the Agency.

The report will be undergoing extensive review by EPA, Federal and State agencies, public interest organizations, and other interest groups and persons during the coming weeks.

The regulations to be published by EPA under Sections 301(d), 304(b), and 306 of the Federal Water Pollution Control Act, as amended, will be based in part, on the report and the comments received on it. EPA will also be considering economic and environmental impact information that is being developed. Upon completion of the review and evaluation of the technical, economic, and environmental information, an EPA report will be issued at the time of proposed rule-making setting forth EPA's preliminary conclusions regarding the subject industry. These proposed rules will include proposed effluent guidelines and standards, standards of performance, and pretreatment standards applicable to the industry. EPA is making this draft contractor's report available to encourage broad, public participation, early in the rule-making process.

The report shall have standing in any EPA proceeding or court proceeding only to the extent that it represents the views of the Contractor who studied the subject industry and prepared the information. It cannot be cited, referenced, or represented in any respect in any such proceedings as a statement of EPA's views regarding the subject industry.

U.S. Environmental Protection Agency
Office of Water and Hazardous Materials
Effluent Guidelines Division
Washington, D.C. 20460

TABLE OF CONTENTS

		Page
	LIST OF FIGURES	xiv
	LIST OF TABLES	xxii
1.0	CONCLUSIONS AND SUMMARY	1
	1.1 PRIORITY POLLUTANTS	1
	1.2 CONTROL AND TREATMENT TECHNOLOGY	1
	1.3 COSTS OF ADDITIONAL IN-PLANT TREATMENT	2
	1.4 SUBCATEGORIZATION	2
	1.5 RESTUDY OF REMANDED REGULATIONS	3
2.0	RECOMMENDATIONS	4
3.0	INTRODUCTION	5
	3.1 AUTHORITY	5
	3.1.1 The Federal Water Pollution Control Act Amendments	5
	3.1.2 Court Remand of Regulations	6
	3.1.3 The Settlement Agreement	8
	3.2 GENERAL APPROACH AND METHODOLOGY	16
	3.2.1 Industry Data Base Development and Subcategorization Review	16
	3.2.2 Screening and Verification Sampling Programs	17
	3.2.3 Engineering Evaluations	17
	3.2.4 Treatment Systems Cost Estimates	17
4.0	SUBCATEGORIZATION REVIEW	18
	4.1 BASIS FOR SUBCATEGORIZATION	18
	4.1.1 Factors Considered	18
	4.1.2 General Conclusions	21
	4.2 SECONDARY SUBCATEGORIZATION	21
	4.2.1 Chlor-Alkali	21
	4.2.2 Titanium Dioxide	22
	4.2.3 Hydrogen Cyanide	23

TABLE OF CONTENTS (continued)

		Page
4.3	INTEGRATION OF SUBCATEGORIES	23
4.3.1	Hydrofluoric Acid and Aluminum Fluoride	23
4.4	SUMMARY	24
5.0	SCREENING AND VERIFICATION SAMPLING PROGRAMS	25
5.1	SCOPE AND METHODOLOGY	25
5.1.1	Selecting Plants and Making Preliminary Contacts	26
5.1.2	Screening and Verification Sampling	27
5.1.3	Analytical Methodology for Priority Pollutants	28
5.1.4	Quality Assurance Provisions	35
5.2	THE BASIS FOR VERIFICATION SAMPLING	36
5.3	THE VERIFICATION PROGRAM	37
6.0	PROCESS AND WASTE TREATMENT INFORMATION DEVELOPMENT AND EVALUATION	38
6.1	INDUSTRY DATA BASE DESCRIPTION	38
6.1.1	Data Acquisition	38
6.2	PROCESS WASTE SOURCES AND CURRENT TREATMENT PRACTICES	41
6.2.1	Data Acquisition	41
6.2.2	Evaluation of Data	41
6.2.3	Model Plant and BPT Treatment System Specification	42
6.2.4	Dissolved Solids in Waste Water Effluents	43
7.0	TREATMENT AND CONTROL ALTERNATIVES FOR ADVANCED LEVEL APPLICATIONS	44
7.1	TREATMENT TECHNOLOGY ASSESSMENT	44
7.1.1	Introduction	44
7.1.2	Hydroxide Precipitation	45
7.1.3	Ferrite Co-precipitation	50
7.1.4	Sulfide Precipitation	50
7.1.5	The Xanthate Process	52
7.1.6	Ion Exchange	54
7.1.7	Reduction Processes	56
7.1.8	Oxidation Processes	57

TABLE OF CONTENTS (continued)

		Page
7.1.9	Membrane Processes	59
7.1.10	Adsorption	62
7.1.11	Fluoride Removal	64
8.0	TREATABILITY ESTIMATES AND LONG TERM DATA ANALYSIS	66
8.1	THE DEVELOPMENT OF TREATABILITY ESTIMATES	66
8.2	THE USE OF HISTORICAL POLLUTANT DATA	80
8.2.1	Determination of Enforcement Guidelines Based Upon Historical Performance	80
8.2.2	Assumptions Concerning 30-Day Average Pollutant Level Measurements	81
8.2.3	Variability Factor for Daily Samples	81
8.2.4	Variability Factor for 30-Day Averages	82
9.0	TREATMENT TECHNOLOGY APPLICATIONS FOR PRIORITY POLLUTANT REMOVAL	84
9.1	SELECTION OF POLLUTANTS TO BE CONTROLLED	84
9.2	APPLICATION OF ADVANCED LEVEL TREATMENT AND CONTROL ALTERNATIVES	84
9.2.1	General Design Objectives	84
9.2.2	Pretreatment Technology	87
9.2.3	New Source Performance Standards	87
9.3	ESTIMATED ACHIEVABLE PERFORMANCE CHARACTERISTICS FOR ADVANCED LEVEL APPLICATIONS	87
9.3.1	Advanced Level Removal of BPT Pollutants	88
9.3.2	Advanced Level Removal of Priority Pollutants	88
10.0	COSTS OF TREATMENT AND CONTROL SYSTEMS	89
10.1	INTRODUCTION	89
10.1.1	Purpose of Cost Data	89
10.1.2	General Approach	90
10.1.3	Cost References and Rationale	90
10.1.4	Definition of Levels of Treatment and Control Cost Development	91
10.1.5	Treatment and Disposal Rationale Applied to Cost Development	91
10.1.6	Expression of Costs	92
10.2	COST ESTIMATES FOR EACH SUBCATEGORY	99

TABLE OF CONTENTS (continued)

		Page
11.0	CHLOR-ALKALI INDUSTRY	100
11.1	ASSESSMENT OF THE WATER POLLUTION POTENTIAL - MERCURY CELL	100
11.1.1	Industry Profile and Analytical Results	100
11.1.2	Process Waste Sources and Waste Water Treatment Data	100
11.2	TECHNOLOGY BASED POLLUTION ABATEMENT	127
11.2.1	Advanced Level Treatment Applications	127
11.2.2	Estimated Performance of BPT Systems	131
11.2.3	Estimated Performance of Advanced Level Systems	135
11.2.4	Cost Estimates	138
11.3	ASSESSMENT OF THE WATER POLLUTION POTENTIAL - DIAPHRAGM CELL	145
11.3.1	Industry Profile and Analytical Results	145
11.3.2	Process Waste Sources	154
11.4	TECHNOLOGY BASED POLLUTION ABATEMENT	174
11.4.1	Advanced Level Treatment Applications	174
11.4.2	Estimated Performance of BPT Systems	179
11.4.3	Estimated Performance of Advanced Level Systems	181
11.4.4	Cost Estimates	184
12.0	HYDROFLUORIC ACID INDUSTRY	194
12.1	ASSESSMENT OF THE WATER POLLUTION POTENTIAL	194
12.1.1	Industry Profile and Analytical Results	194
12.1.2	Process Waste Sources and Waste Water Treatment Data	197
12.2	TECHNOLOGY BASED POLLUTION ABATEMENT	219
12.2.1	Advanced Level Treatment Applications	219
12.2.2	Estimated Performance of BPT Systems	226
12.2.3	Estimated Performance of Advanced Level Systems	233
12.2.4	Cost Estimates	237
13.0	HYDROGEN PEROXIDE INDUSTRY	253
13.1	ASSESSMENT OF THE WATER POLLUTION POTENTIAL	253
13.1.1	Industry Profile and Analytical Results	253

TABLE OF CONTENTS (continued)

		Page
14.0	TITANIUM DIOXIDE INDUSTRY	256
14.1	ASSESSMENT OF THE WATER POLLUTION POTENTIAL OF THE CHLORIDE PROCESS	256
14.1.1	Industry Profile and Analytical Results	256
14.1.2	Process Waste Sources and Waste Water Treatment Data	259
14.2	TECHNOLOGY BASED POLLUTION ABATEMENT	275
14.2.1	Advanced Level Treatment Applications	275
14.2.2	Base Level Performance Characteristics for BPT Pollutant Removal	280
14.2.3	Estimated Performance of Advanced Level Systems	283
14.2.4	Cost Estimates - Chloride Process	286
14.3	ASSESSMENT OF THE WATER POLLUTION POTENTIAL OF THE SULFATE PROCESS	293
14.3.1	Industry Profile and Analytical Results	293
14.3.2	Process Waste Sources and Waste Treatment Data	296
14.4	TECHNOLOGY BASED POLLUTION ABATEMENT	310
14.4.1	Advanced Level Treatment Application	310
14.4.2	Base Level Performance Characteristics for BPT Pollutant Removal	311
14.4.3	Estimated Performance for Advanced Level System	318
14.4.4	Cost Estimates - Sulfate Process	321
15.0	ALUMINUM FLUORIDE INDUSTRY	328
15.1	ASSESSMENT OF THE WATER POLLUTION POTENTIAL	328
15.1.1	Industrial Profile and Analytical Results	328
15.1.2	Process Waste Sources and Waste Water Treatment Data	333
15.2	TECHNOLOGY BASED POLLUTION ABATEMENT	347
15.2.1	Advanced Level Treatment Applications	347
15.2.2	Estimated Performance of BPT Systems	353

TABLE OF CONTENTS (continued)

		Page
	15.2.3 Estimated Performance of Advanced Level Systems	355
	15.2.4 Cost Estimates	359
16.0	CHROME PIGMENTS INDUSTRY	376
	16.1 ASSESSMENT OF THE WATER POLLUTION POTENTIAL	376
	16.1.1 Industry Profile and Analytical Results	376
	16.1.2 Process Waste Sources and Waste Water Treatment Data	380
	16.2 TECHNOLOGY BASED POLLUTION ABATEMENT	400
	16.2.1 Advanced Level Treatment Applications	400
	16.2.2 Estimated Performance of BPT Systems	403
	16.2.3 Estimated Performance of Advanced Level Systems	407
	16.2.4 Cost Estimates	407
17.0	HYDROGEN CYANIDE INDUSTRY	417
	17.1 ASSESSMENT OF THE WATER POLLUTION POTENTIAL OF THE ANDRUSSOW PROCESS	417
	17.1.1 Industry Profile and Analytical Results	417
	17.1.2 Process Waste Sources and Waste Water Treatment Data	422
	17.2 TECHNOLOGY BASED POLLUTION ABATEMENT	434
	17.2.1 Advanced Level Treatment Applications	434
	17.2.2 Estimated Performance of BPT Systems	435
	17.2.3 Estimated Performance of Advanced Level Systems	444
	17.2.4 Cost Estimates	447
18.0	SODIUM DICHROMATE INDUSTRY	454
	18.1 ASSESSMENT OF THE WATER POLLUTION POTENTIAL	454
	18.1.1 Industry Profile and Analytical Results	454
	18.1.2 Process Waste Sources and Waste Water Treatment Data	459
	18.2 TECHNOLOGY BASED POLLUTION ABATEMENT	470
	18.2.1 Advanced Level Treatment Applications	470

TABLE OF CONTENTS (continued)

		Page
	18.2.2 Estimated Performance of BPT Systems	474
	18.2.3 Estimated Performance of Advanced Level Systems	478
	18.2.4 Cost Estimates	478
19.0	CARBON DIOXIDE INDUSTRY	487
	19.1 ASSESSMENT OF THE WATER POLLUTION POTENTIAL	487
	19.1.1 Industry Profile and Analytical Results	487
20.0	CARBON MONOXIDE AND BY-PRODUCT HYDROGEN INDUSTRY	490
	20.1 ASSESSMENT OF THE WATER POLLUTION POTENTIAL	490
	20.1.1 Industry Profile and Analytical Results	490
21.0	COPPER SULFATE INDUSTRY	493
	21.1 ASSESSMENT OF THE WATER POLLUTION POTENTIAL	493
	21.1.1 Industry Profile and Analytical Results	493
	21.1.2 Process Waste Sources and Waste Water Treatment Data	497
	21.2 TECHNOLOGY BASED POLLUTION ABATEMENT	503
	21.2.1 Advanced Level Treatment Applications	503
	21.2.2 Estimated Performance of BPT Systems	507
	21.2.3 Estimated Performance of Advanced Level Systems	509
	21.2.4 Cost Estimates	512
22.0	NICKEL SULFATE INDUSTRY	515
	22.1 ASSESSMENT OF THE WATER POLLUTION POTENTIAL	515
	22.1.1 Industry Profile and Analytical Data	515
	22.1.2 Process Waste Sources and Waste Water Treatment Data	520
	22.2 TECHNOLOGY BASED POLLUTION ABATEMENT	529
	22.2.1 Advanced Treatment Applications	529
	22.2.2 Estimated Performance of BPT Systems	533

TABLE OF CONTENTS (continued)

		Page
	22.2.3 Estimated Performance of Advanced Level Systems	533
	22.2.4 Cost Estimates	536
23.0	SILVER NITRATE INDUSTRY	544
	23.1 ASSESSMENT OF THE WATER POLLUTION POTENTIAL	544
	23.1.1 Industry Profile and Analytical Results	544
24.0	SODIUM BISULFITE INDUSTRY	547
	24.1 ASSESSMENT OF THE WATER POLLUTION POTENTIAL	547
	24.1.1 Industry Profile and Analytical Results	547
	24.1.2 Process Waste Sources and Waste Water Treatment Data	552
	24.2 TECHNOLOGY BASED POLLUTION ABATEMENT	560
	24.2.1 Advanced Level Treatment Applications	560
	24.2.2 Estimated Performance of BPT Systems	565
	24.2.3 Estimated Performance of Advanced Level Systems	567
	24.2.4 Cost Estimates	571
25.0	SODIUM HYDROSULFITE	578
	25.1 ASSESSMENT OF THE WATER POLLUTION POTENTIAL	578
	25.1.1 Industry Profile and Analytical Results	578
	25.1.2 Process Waste Sources and Waste Water Treatment Data	581
	25.2 TECHNOLOGY BASED POLLUTION ABATEMENT	590
	25.2.1 Advanced Level Treatment Applications	590
	25.2.2 Estimated Performance of BPT Systems	595
	25.2.3 Estimated Performance of Advanced Level Systems	598
	25.2.4 Cost Estimates	598
26.0	HYDROCHLORIC ACID INDUSTRY	602
	26.1 ASSESSMENT OF THE WATER POLLUTION POTENTIAL	602
	26.1.1 Industry Profile and Analytical Results	602

TABLE OF CONTENTS (continued)

		Page
27.0	NITRIC ACID INDUSTRY	605
	27.1 ASSESSMENT OF THE WATER POLLUTION POTENTIAL	605
	27.1.1 Industry Profile and Analytical Results	605
28.0	SODIUM CARBONATE INDUSTRY (SOLVAY PROCESS)	608
	28.1 ASSESSMENT OF THE WATER POLLUTION POTENTIAL	608
	28.1.1 Industry Profile and Analytical Results	608
29.0	SODIUM METAL INDUSTRY	611
	29.1 ASSESSMENT OF THE WATER POLLUTION POTENTIAL	611
	29.1.1 Industry Profile and Analytical Results	611
30.0	SODIUM SILICATE INDUSTRY	614
	30.1 ASSESSMENT OF THE WATER POLLUTION POTENTIAL	614
	30.1.1 Industry Profile and Analytical Results	614
31.0	SULFURIC ACID INDUSTRY	617
	31.1 ASSESSMENT OF THE WATER POLLUTION POTENTIAL	617
	31.1.1 Industry Profile and Analytical Results	617
32.0	AMMONIUM CHLORIDE INDUSTRY	620
	32.1 ASSESSMENT OF THE WATER POLLUTION POTENTIAL	620
	32.1.1 Industry Profile and Analytical Results	620
33.0	AMMONIUM HYDROXIDE INDUSTRY	623
	33.1 ASSESSMENT OF THE WATER POLLUTION POTENTIAL	623
	33.1.1 Industry Profile and Analytical Results	623

TABLE OF CONTENTS (continued)

		Page
34.0	BARIUM CARBONATE INDUSTRY	626
	34.1 ASSESSMENT OF THE WATER POLLUTION POTENTIAL	626
	34.1.1 Industry Profile and Analytical Results	626
35.0	BORIC ACID INDUSTRY	629
	35.1 ASSESSMENT OF THE WATER POLLUTION POTENTIAL	629
	35.1.1 Industry Profile and Analytical Results	629
36.0	CALCIUM CARBONATE INDUSTRY	632
	36.1 ASSESSMENT OF THE WATER POLLUTION POTENTIAL	632
	36.1.1 Industry Profile and Analytical Results	632
37.0	CUPROUS OXIDE INDUSTRY	635
	37.1 ASSESSMENT OF THE WATER POLLUTION POTENTIAL	635
	37.1.1 Industry Profile and Analytical Results	635
38.0	MANGANESE SULFATE INDUSTRY	638
	38.1 ASSESSMENT OF THE WATER POLLUTION POTENTIAL	638
	38.1.1 Industry Profile and Analytical Results	638
39.0	STRONG NITRIC ACID INDUSTRY	641
	39.1 ASSESSMENT OF THE WATER POLLUTION POTENTIAL	641
	39.1.1 Industry Profile and Analytical Results	641
40.0	OXYGEN AND NITROGEN INDUSTRY	644
	40.1 ASSESSMENT OF THE WATER POLLUTION POTENTIAL	644
	40.1.1 Industry Profile and Analytical Results	644

TABLE OF CONTENTS (continued)

		Page
41.0	POTASSIUM IODIDE INDUSTRY	647
	41.1 ASSESSMENT OF THE WATER POLLUTION POTENTIAL	647
	41.1.1 Industry Profile and Analytical Results	647
42.0	SODIUM HYDROSULFIDE INDUSTRY	650
	42.1 ASSESSMENT OF THE WATER POLLUTION POTENTIAL	650
	42.1.1 Industry Profile and Analytical Results	650
43.0	SODIUM SILICOFLUORIDE INDUSTRY	653
	43.1 ASSESSMENT OF THE WATER POLLUTION POTENTIAL	653
	43.1.1 Industry Profile and Analytical Results	653
44.0	SODIUM THIOSULFATE INDUSTRY	656
	44.1 ASSESSMENT OF THE WATER POLLUTION POTENTIAL	656
	44.1.1 Industry Profile and Analytical Results	656
45.0	SULFUR DIOXIDE INDUSTRY	659
	45.1 ASSESSMENT OF THE WATER POLLUTION POTENTIAL	659
	45.1.1 Industry Profile and Analytical Results	659
	REFERENCES	662
	BIBLIOGRAPHY	667
	ACKNOWLEDGEMENTS	671
	APPENDIX A	A-1

LIST OF FIGURES

		Page
5-1	Sample flow sheet for metals	30
7-1	Solubility of metal hydroxides and sulfides	47
7-2	Electrodialysis process	61
11-1	General process diagram for production of chlorine/caustic by mercury cells	108
11-2	General process flow diagram at Plant #299 showing the sampling points. Chlorine/Caustic (Mercury Cell) Manufacture	112
11-3	General process flow diagram at Plant #747 showing the sampling points. Chlorine/Caustic (Mercury Cell) Manufacture	115
11-4	General process flow diagram at Plant #167 showing the sampling points. Chlorine/Caustic (Mercury Cell) Manufacture	117
11-5	General process flow diagram at Plant #317 showing the sampling points. Chlorine/Caustic (Mercury Cell) Manufacture	118
11-6	Waste water treatment Level 1 for chlorine-mercury cell subcategory	129
11-7	Waste water treatment Level 2 for chlorine-mercury cell subcategory	130
11-8	Annual treatment cost vs. production for the Chlorine Subcategory (Mercury Cell Process)	142
11-9	Annual unit treatment cost vs. production for the Chlorine Subcategory (Mercury Cell Process)	143
11-10	General process flow diagram for production of chlorine/caustic by diaphragm cells	156
11-11	General process flow diagram at Plant #001 showing the sampling points. Chlorine/Caustic (Diaphragm Cell) Manufacture	159
11-12	General process flow diagram at Plant #261 showing the sampling points. Chlorine/Caustic (Diaphragm Cell) Manufacture	162

LIST OF FIGURES (continued)

		Page
11-13	General process flowsheet at Plant #738 showing the sampling points. Chlorine/Caustic (Diaphragm Cell) Manufacture	164
11-14	General process flow diagram at Plant #738 showing the sampling points. Chlorine/Caustic (Diaphragm Cell) Manufacture	165
11-15	General process flow diagram at Plant #967 showing the sampling points. Chlorine/Caustic (Diaphragm Cell) Manufacture	167
11-16	General process flow diagram at Plant #736 showing the sampling points. Chlorine/Caustic (Diaphragm Cell) Manufacture	168
11-17	Waste water treatment Level 1 for chlorine - diaphragm cell subcategory	176
11-18	Waste water treatment Level 2 for chlorine- diaphragm cell subcategory	177
11-19	Waste water treatment Level 3 for chlorine - diaphragm cell subcategory	178
11-20	Annual treatment cost vs. production for the Chlorine Subcategory (Diaphragm Cell Process)	190
11-21	Annual unit treatment cost vs. production for the Chlorine Subcategory (Diaphragm Cell Process)	191
12-1	General process flow diagram for production of hydrofluoric acid	202
12-2	General process flow diagram at Plant #705 showing the sampling points. Hydrofluoric Acid Manufacture	208
12-3	General process flow diagram at Plant #251 showing the sampling points. Hydrofluoric Acid Manufacture	211
12-4	Production versus waste flow data for HF plants	213
12-5	Waste water treatment Level 1 for hydrofluoric acid subcategory	221
12-6	Waste water treatment Level 2 for hydrofluoric acid subcategory	222
12-7	Waste water treatment Level 3 for hydrofluoric acid subcategory	223

LIST OF FIGURES (continued)

		Page
12-8	Waste water treatment Level 4 for hydrofluoric acid subcategory	224
12-9	Waste water treatment new source performance standard for hydrofluoric acid subcategory	225
12-10	Annual treatment cost vs. production for the Hydrofluoric Acid Subcategory	242
12-11	Annual unit treatment cost vs. production for the Hydrofluoric Acid Subcategory	243
12-12	Annual treatment cost vs. production for the Hydrofluoric Acid Subcategory (NSPS)	250
12-13	Annual unit treatment cost vs. production for the Hydrofluoric Acid Subcategory (NSPS)	251
14-1	General process diagram for production of titanium dioxide (chloride process)	264
14-2	General flow diagram at Plant #559 showing the sampling points. Titanium Dioxide (Chloride Process) Manufacture	267
14-3	General flow diagram at Plant #172 showing the sampling points. Titanium Dioxide (Chloride Process) Manufacture	270
14-4	Waste water treatment Level 1 for titanium dioxide - chloride process	277
14-5	Waste water treatment Level 2 for titanium dioxide - chloride process	278
14-6	Waste water treatment Level 3 for titanium dioxide - chloride process	279
14-7	Annual treatment cost vs. production for the Titanium Dioxide Subcategory, Chloride Process	290
14-8	Annual unit treatment cost vs. production for the Titanium Dioxide Subcategory, Chloride Process	291
14-9	General process flow diagram for production of Titanium Dioxide by sulfate process	299
14-10	General flow diagram at Plant #559 showing the sampling points. Titanium Dioxide (Sulfate Process)	303

LIST OF FIGURES (continued)

	Page
14-1te water treatment Level 1 for titanium dioxide - fate process	312
14-1te water treatment Level 2 for titanium dioxide - fate process	313
14-1ual treatment cost vs. production for the anium Dioxide Subcategory, Sulfate Process	325
14-1ual unit treatment cost vs. production for the anium Dioxide Subcategory, Sulfate Process	326
15-1eral process flow diagram for production of minum fluoride	334
15-2eral process flow diagram at Plant #705 showing sampling points. (Aluminum Fluoride Manufacture)	339
15-3eral process flow diagram at Plant #605 showing sampling points. Aluminum Fluoride Manufacture	341
15-4duction vs. Unit Waste Flow for Aluminum oride Manufacture	343
15-5te water treatment Level 1 for aluminum fluoride category	349
15-6te water treatment Level 2 for aluminum fluoride category	350
15-7te water treatment Level 3 for aluminum fluoride category	351
15-8te water treatment Level 4 for aluminum fluoride category	352
15-1ual treatment cost vs. production for the uminum Fluoride Subcategory	363
15-1ual unit treatment cost vs. production for the uminum Fluoride Subcategory	364
15-2ect of variation of pollutant load on treatment st at level 1 technology	367
15-2ect of variation of pollutant load on treatment st at level 4 technology	368

LIST OF FIGURES (continued)

		Page
15-13	Effect of variation of hydraulic load on treatment cost at level 2 technology	371
15-14	Effect of variation of hydraulic load on treatment cost at level 3 technology	372
15-15	Effect of variation of hydraulic load on treatment cost at level 4 technology	373
16-1	General process diagram for production of anhydrous chrome oxide	383
16-2	General process diagram for production of hydrated chromic oxide	384
16-3	General process diagram for production of chrome yellow	385
16-4	General process diagram for production of molybdate orange	387
16-5	General process diagram for production of chrome green	388
16-6	General process diagram for production of zinc yellow	390
16-7	General process diagram for production of chrome pigment complexes	392
16-8	General waste water treatment process flow diagram at Plant #894 showing the sampling points. (Chrome Pigment Manufacture)	395
16-9	General waste water treatment process flow diagram at Plant #002 showing the sampling points. (Chrome Pigment Manufacture)	397
16-10	Waste water treatment Level 1 for chrome pigments	401
16-11	Waste water treatment Level 2 for chrome pigments	402
16-12	Annual treatment cost vs. production for the Chrome Pigments Subcategory	414
16-13	Annual unit treatment cost vs. production for the Chrome Pigments Subcategory	415

LIST OF FIGURES (continued)

		Page
17-1	General process flow diagram for production of hydrogen cyanide by the Andrussow Process	424
17-2	General waste water treatment process flow diagram at Plant #765 showing the sampling points. (Hydrogen Cyanide Manufacture)	427
17-3	General waste water treatment process flow diagram at Plant #782 showing the sampling points. (Hydrogen Cyanide Manufacture)	430
17-4	Waste water treatment Level 1 for hydrogen cyanide subcategory	436
17-5	Waste water treatment Level 2 for hydrogen cyanide subcategory	437
17-6	Annual treatment cost as a function of production for the Hydrogen Cyanide Subcategory	451
17-7	Annual unit treatment cost as a function of production for the Hydrogen Cyanide Subcategory	452
18-1	General process diagram for production of sodium dichromate	461
18-2	General waste water treatment process flow diagram at Plant #493 showing the sampling points. (Sodium Dichromate Manufacture)	464
18-3	General waste water treatment process flow diagram at Plant #376 showing the sampling points. (Sodium Dichromate Manufacture)	466
18-4	Waste water treatment Level 1 for sodium dichromate subcategory	472
18-5	Waste water treatment Level 2 for sodium dichromate subcategory	473
18-6	Relationship of annual treatment cost to production for the Sodium Dichromate Subcategory	483
18-7	Relationship of annual unit treatment cost to production for the Sodium Dichromate Subcategory	484
21-1	General process flow diagram at Plant #034 showing the sampling points. Copper Sulfate Manufacture	501

LIST OF FIGURES (continued)

		Page
21-2	Waste water treatment Level 1 for copper sulfate subcategory - batch process	505
21-3	Waste water treatment Level 2 for copper sulfate subcategory - batch process	506
22-1	General waste water treatment process flow diagram showing the sampling points. (Nickel Sulfate Manufacture)	523
22-2	General process flow diagram at Plant #572 showing the sampling points. Nickel Sulfate Manufacture	525
22-3	General process flow diagram of Plant #120. Nickel Sulfate Manufacture	526
22-4	General waste water treatment process flow diagram at Plant #120 showing the sampling points. (Nickel Sulfate Manufacture)	527
22-5	Waste water treatment Level 1 for nickel sulfate subcategory - batch process	531
22-6	Waste water treatment Level 2 for nickel sulfate subcategory - batch process	532
22-7	Relationship of annual treatment cost to production for the Nickel Sulfate Subcategory	541
22-8	Relationship of annual unit treatment cost to production for the Nickel Sulfate Subcategory	542
24-1	General process flow diagram at Plant #282 showing the sampling points. Sodium Bisulfite Manufacture	556
24-2	General flow diagram at Plant #586 showing the sampling points. Sodium Bisulfite Manufacture	557
24-3	General process flow diagram at Plant #987 showing the sampling points. Sodium Bisulfite Manufacture	559
24-4	Waste water treatment Level 1 for sodium bisulfite subcategory - batch process	562
24-5	Waste water treatment Level 2 for sodium bisulfite subcategory - batch process	563

LIST OF FIGURES (continued)

		Page
24-6	Waste water treatment Level 3 for sodium bisulfite subcategory	564
24-7	Variation of annual treatment cost with production for the Sodium Bisulfite Subcategory	575
24-8	Variation of annual unit treatment cost with production (Sodium Bisulfite Subcategory)	576
25-1	General process flow diagram at Plant #672 Sodium Hydrosulfite Manufacture	584
25-2	General process flow diagram at Plant #771 showing the sampling points. Sodium Hydrosulfite Manufacture	586
25-3	Waste water treatment level 1 for sodium hydrosulfite	593
25-4	Waste water treatment Level 2 for sodium hydrosulfite	594

LIST OF TABLES

		Page
3-1	Recommended List of Priority Pollutants	8
5-1	Analytical Detection Limits for Metals	33
7-1	Solubility Products of Trace Metals	48
7-2	Comparison of Reverse Osmosis Concepts	63
8-1	Waste Water Treatment Options and Performance Data Summary - Antimony and Arsenic Removal	67
8-2	Waste Water Treatment Options and Performance Data Summary - Beryllium and Cadmium Removal	68
8-3	Waste Water Treatment Options and Performance Data Summary - Copper Removal	69
8-4	Waste Water Treatment Options and Performance Data Summary - Chromium III and Chromium VI Removal	70
8-5	Waste Water Treatment Options and Performance Data Summary - Lead Removal	71
8-6	Waste Water Treatment Options and Performance Data Summary - Mercury II Removal	72
8-7	Waste Water Treatment Options and Performance Data Summary - Nickel Removal	73
8-8	Waste Water Treatment Options and Performance Data Summary - Silver Removal	74
8-9	Waste Water Treatment Options and Performance Data Summary - Selenium and Thallium Removal	75
8-10	Waste Water Treatment Options and Performance Data Summary - Zinc Removal	76
8-11	Estimated Achievable 30-Day Averages for the Applied Technologies	78
9-1	Prioritization of Pollutant Metals Found in Each Subcategory	85
11-1	Subcategory Profile Data Summary - Chlorine Mercury Cell	101
11-2	Existing Regulations - Effluent Limitation Guidelines	102

LIST OF TABLES (continued)

		Page
11-3	Summary of Raw Waste Loadings Found in Screening and Verification Sampling	104
11-4	Priority Pollutant Raw Waste Loads (in kg/kkg of Product)	105
11-5	Tail Gas Scrubber Flow Data for Chlorine/Caustic Subcategory	110
11-6	Flow and Pollutant Concentration Data of the Sampled Waste Streams for Plant #299 Producing Chlorine by Mercury Cells	113
11-7	Flow and Pollutant Concentration Data of the Sampled Waste Streams for Plants #747, #167 and #317 Producing Chlorine by Mercury Cells	116
11-8	Waste Flow Data for Chlorine/Caustic Subcategory Using Mercury Cells	124
11-9	Residual Chlorine Effluent Loadings at Selected Chlor-Alkali Plants	132
11-10	Effluent Loadings from Selected Chlor-Alkali Mercury Cell Plants	133
11-11	Effluent Priority Pollutant Loads following Mercury Treatment	134
11-12	Control Parameter Limitations Subcategory: Chlorine - Mercury Cell	136
11-13	Control Parameter Limitations Subcategory: Chlorine - Mercury Cell	137
11-14	Model Plant Treatment Costs Subcategory: Chlorine Mercury Cell	139
11-15	Model Plant Treatment Costs Subcategory: Chlorine Mercury Cell	140
11-16	Model Plant Treatment Costs Subcategory: Chlorine Mercury Cell	141
11-17	Model Plant Treatment Costs Subcategory: Chlorine Mercury Cell	144
11-18	Subcategory Profile Data Summary Subcategory: Chlorine Diaphragm Cell	146

		Page
11-19	Summary of Raw Waste Loadings Found in Screening and Verification Sampling	148
11-20	Priority Pollutant Raw Waste Loads	149
11-20A	Results of Asbestos Sampling at Diaphragm Cell Plants	150
11-21	Metal Priority Pollutant Raw Waste Loadings Found in Sampling at a Chlorine-Diaphragm Cell Plant with Graphite Anodes	152
11-22	Organic Priority Pollutant Raw Waste Loadings Found in Sampling at a Chlorine - Diaphragm Cell Plant with Graphite Anode	153
11-23	Data of Water Usage for Barometric Condenser in Chlorine/Caustic Plants Using Diaphragm Cells	157
11-24	Flow and Pollutant Concentration Data of the Sampled Waste Streams for Plants #277, #261, and #738 Producing Chlorine/Caustic by Diaphragm Cells	160
11-25	Flow and Pollutant Concentration Data of the Sampled Waste Streams for Plants #967 and #736 Producing Chlorine by Diaphragm Cell	166
11-26	Waste Flow Data for Chlorine/Caustic Subcategory Using Diaphragm Cells	172
11-27	Effluent Loadings from Selected Chlor-Alkali Diaphragm Cell Plants	180
11-28	Priority Pollutant Removal at Lead Treatment Facility Plant #967	182
11-29	Control Parameter Limitations Subcategory: Chlorine - Diaphragm Cell	183
11-30	Control Parameter Limitations Subcategory: Chlorine - Diaphragm Cell	185
11-31	Control Parameter Limitations Subcategory: Chlorine - Diaphragm Cell	186
11-32	Model Plant Treatment Costs Subcategory: Chlorine Diaphragm Cell	187
11-33	Model Plant Treatment Costs Subcategory: Chlorine Diaphragm Cell	188

LIST OF TABLES (continued)

		Page
11-34	Model Plant Treatment Costs Subcategory: Chlorine Diaphragm Cell	189
11-35	Model Plant Treatment Costs Subcategory: Chlorine Diaphragm Cell	192
12-1	Subcategory Profile Data Summary Subcategory: Hydrofluoric Acid	195
12-2	Existing Regulations - Effluent Limitation Guidelines	196
12-3	Summary of Raw Waste Loadings Found in Screening and Verification Sampling	198
12-4	Priority Pollutant Raw Waste Loads	199
12-5	Water Usage in the Hydrofluoric Acid Subcategory	203
12-6	Waste Flow from Hydrofluoric Acid Manufacturing Plants, m^3/kkg of Hydrofluoric Acid	205
12-7	Flow and Pollutant Concentration Data of the Sampled Waste Streams of Plant #705 Producing Hydrofluoric Acid	209
12-8	Flow and Pollutant Concentration Data of the Sampled Waste Streams for Plants #705 and #251 Producing Hydrofluoric Acid	210
12-9	Waste Water Influent Data to Treatment Facility in the Hydrofluoric Acid Subcategory	212
12-10	Summary of Solid Waste Generated from the HF Manufacturing Processes and Treatment Facilities at Plants #705 and #251	215
12-11	Gypsum Solids Production in the Hydrofluoric Acid Subcategory	216
12-12	Summary of Waste Water Control and Treatment Technology Employed at Hydrofluoric Acid Plants	227
12-13	Summary of Effluent Quality Attained and Variability Observed at Four Representative Hydrofluoric Acid Plants	230

LIST OF TABLES (continued)

		Page
12-14	Control Parameter Limitations Subcategory: Hydrofluoric Acid	231
12-15	Priority Pollutant Removal at Hydrofluoric Acid Plants	232
12-16	Control Parameter Limitations Subcategory: Hydrofluoric Acid	234
12-17	Control Parameter Limitations Subcategory: Hydrofluoric Acid	235
12-18	Control Parameter Limitations Subcategory: Hydrofluoric Acid	236
12-19	Control Parameter Limitations Subcategory: Hydrofluoric Acid	238
12-20	Model Plant Treatment Costs Subcategory: Hydrofluoric Acid	239
12-21	Model Plant Treatment Costs Subcategory: Hydrofluoric Acid	240
12-22	Model Plant Treatment Costs Subcategory: Hydrofluoric Acid	241
12-23	Model Plant Treatment Costs Subcategory: Hydrofluoric Acid	245
12-24	Model Plant Treatment Costs Subcategory: Hydrofluoric Acid	246
12-25	Model Plant Treatment Costs Subcategory: Hydrofluoric Acid	247
12-26	Model Plant Treatment Costs Subcategory: Hydrofluoric Acid	248
12-27	Model Plant Treatment Costs Subcategory: Hydrofluoric Acid	252
13-1	Subcategory Profile Data Summary Subcategory: Hydrogen Peroxide	254
13-2	Existing Regulations - Effluent Limitation Guidelines	255

LIST OF TABLES (continued)

		Page
14-1	Subcategory Profile Data Summary Subcategory: Titanium Dioxide Chloride Process	257
14-2	Existing Regulations - Effluent Limitation Guidelines	258
14-3	Summary of Raw Waste Loadings Found in Screening and Verification Sampling	260
14-4	Priority Pollutant Raw Waste Loads	261
14-5	Water Usage in Titanium Dioxide - Chloride Process Subcategory	265
14-6	Flow and Pollutant Concentration Data of the Sampled Waste Streams for Plant #559 Producing Titanium Dioxide (Chloride Process)	268
14-7	Flow and Pollutant Concentration Data of the Sampled Waste Streams for Plant #172 Producing Titanium Dioxide (Chloride Process)	271
14-8	Solid Waste Produced in Titanium Dioxide - Chloride Process Subcategory	273
14-9	Waste Water Flow for Titanium Dioxide - Chloride Process Subcategory	273
14-10	Raw Waste and Treated Effluent Quality at Titanium Dioxide - Chloride Process Plants	281
14-11	Control Parameter Limitations Subcategory: Titanium Dioxide - Chloride Process	282
14-12	Control Parameter Limitations Subcategory: Titanium Dioxide - Chloride Process	284
14-13	Control Parameter Limitations Subcategory: Titanium Dioxide - Chloride Process	285
14-14	Model Plant Treatment Costs Subcategory: Titanium Dioxide - Chloride	287
14-15	Model Plant Treatment Costs Subcategory: Titanium Dioxide - Chloride	288
14-16	Model Plant Treatment Costs Subcategory: Titanium Dioxide - Chloride	289

LIST OF TABLES (continued)

		Page
14-17	Model Plant Treatment Costs Subcategory: Titanium Dioxide - Chloride	292
14-18	Subcategory Profile Data Summary Subcategory: Titanium Dioxide Sulfate Process	293A
14-19	Summary of Raw Waste Loadings Found in Screening and Verification Sampling	294
14-20	Priority Pollutant Raw Waste Loads	295
14-21	Analysis of Ilmenite Ores	297
14-22	Water Usage in Titanium Dioxide - Sulfate Process Subcategory	300
14-23	Flow and Pollutant Concentration Data of the Waste Streams Sampled for Plant #559 Producing Titanium Dioxide (Sulfate Process)	304
14-24	Effluent Flow at Plants #555, #605 and #559 Producing Titanium Dioxide (Sulfate Process)	306
14-25	Raw Waste Characteristics (Industry Data) for Plant #555 (Production of TiO_2 by Sulfate Process)	307
14-26	Summary of Existing Control and Treatment Technology for Sulfate-Process Titanium Dioxide Plants	315
14-27	Summary of Daily Effluent Monitoring Data for Combined Waste Water Treatment Discharge at Sulfate-Process Titanium Dioxide Plant #559	316
14-28	Verification Results Titanium Dioxide Plant #559	317
14-29	Control Parameter Limitations Subcategory: Titanium Dioxide - Sulfate Process	319
14-30	Control Parameter Limitations Subcategory: Titanium Dioxide - Sulfate Process	320
14-31	Model Plant Treatment Costs Subcategory: Titanium Dioxide Sulfate	322
14-32	Model Plant Treatment Costs Subcategory: Titanium Dioxide Sulfate	323

LIST OF TABLES (continued)

		Page
14-33	Model Plant Treatment Costs Subcategory: Titanium Dioxide Sulfate	324
14-34	Model Plant Treatment Costs Subcategory: Titanium Dioxide Sulfate	327
15-1	Subcategory Profile Data Summary Subcategory: Aluminum Fluoride	329
15-2	Existing Regulations - Effluent Limitation Guidelines	330
15-3	Summary of Raw Waste Loadings Found in Screening and Verification Sampling	331
15-4	Priority Pollutant Raw Waste Loads	332
15-5	Water Usage in the Aluminum Fluoride Subcategory	335
15-6	Waste Water Flow at Plants #837, #705 and #605 for Aluminum Fluoride Subcategory	337
15-7	Flow and Pollutant Concentration Data of the Sampled Waste Streams for Plant #705 Producing Aluminum Fluoride	340
15-8	Flow and Pollutant Concentration Data of the Sampled Streams for Plant #605 Producing Aluminum Fluoride	342
15-9	Solids Generated at Plant #705 and #605 Producing Aluminum Fluoride	345
15-10	Control Parameter Limitations Subcategory: Aluminum Fluoride	354
15-11	Control Parameter Limitations Subcategory: Aluminum Fluoride	356
15-12	Control Parameter Limitations Subcategory: Aluminum Fluoride	357
15-13	Control Parameter Limitations Subcategory: Aluminum Fluoride	358
15-14	Model Plant Treatment Costs Subcategory: Aluminum Fluoride	360
15-15	Model Plant Treatment Costs Subcategory: Aluminum Fluoride	361

		Page
15-16	Model Plant Treatment Costs Subcategory: Aluminum Fluoride	362
15-17	Model Plant Treatment Costs Subcategory: Aluminum Fluoride	365
15-18	Model Plant Treatment Costs Subcategory: Aluminum Fluoride	366
15-19	Model Plant Treatment Costs Subcategory: Aluminum Fluoride	369
15-20	Model Plant Treatment Costs Subcategory: Aluminum Fluoride	370
15-21	Model Plant Treatment Costs Subcategory: Aluminum Fluoride	374
16-1	Subcategory Profile Data Summary Subcategory: Chrome Pigments	377
16-2	Existing Regulations - Effluent Limitation Guidelines	378
16-3	Summary of Raw Waste Loadings Found in Screening and Verification Sampling	379
16-4	Priority Pollutant Raw Waste Loads	381
16-5	Water Usage in the Chrome Pigments Subcategory	391
16-6	Aqueous Process Waste Effluents in Chrome Pigments Subcategory	393
16-7	Flow and Pollutant Concentration Data of the Sampled Waste Streams for Plant #894 Producing Chrome Pigments	396
16-8	Flow and Pollutant Concentration Data of the Sampled Waste Streams for Plant #002 Producing Chrome Pigments	396
16-9	Monitoring and Verification Sampling of Chrome Pigments Plant #894	405
16-10	Control Parameter Limitations Subcategory: Chrome Pigments	406

LIST OF TABLES (continued)

		Page
16-11	Control Parameter Limitations Subcategory: Chrome Pigments	408
16-12	Model Plant Treatment Costs Subcategory: Chrome Pigments	409
16-13	Model Plant Treatment Costs Subcategory: Chrome Pigments	410
16-14	Model Plant Treatment Costs Subcategory: Chrome Pigments	411
16-15	Model Plant Treatment Costs Subcategory: Chrome Pigments	412
16-16	Model Plant Treatment Costs Subcategory: Chrome Pigments	416
17-1	Subcategory Profile Data Summary Subcategory: Hydrogen Cyanide	418
17-2	Existing Regulations - Effluent Limitation Guidelines	419
17-3	Summary of Raw Waste Loadings Found in Screening and Verification Sampling	420
17-4	Priority Pollutant Raw Waste Loads	421
17-5	Water Usage in Hydrogen Cyanide - Andrussow Process Subcategory	425
17-6	Flow and Pollutant Concentration Data of the Sampled Waste Streams for Plant #765 Producing Hydrogen Cyanide	428
17-7	Flow and Pollutant Concentration Data of the Sampled Waste Streams for Plant #782 Producing Hydrogen Cyanide	431
17-8	Waste Flow Data for HCN Production by the Andrussow Process	432
17-9	Verification Sampling of Hydrogen Cyanide Plant #782	439
17-10	Verification Sampling of Hydrogen Cyanide Plant #765	440

LIST OF TABLES (continued)

		Page
17-11	Control Parameter Limitations Subcategory: Hydrogen Cyanide	442
17-12	Control Parameter Limitations Subcategory: Hydrogen Cyanide	443
17-13	Control Parameter Limitations Subcategory: Hydrogen Cyanide	445
17-14	Control Parameter Limitations Subcategory: Hydrogen Cyanide	446
17-15	Model Plant Treatment Costs Subcategory: Hydrogen Cyanide	448
17-16	Model Plant Treatment Costs Subcategory: Hydrogen Cyanide	449
17-17	Model Plant Treatment Costs Subcategory: Hydrogen Cyanide	450
17-18	Model Plant Treatment Costs Subcategory: Hydrogen Cyanide	453
18-1	Subcategory Profile Data Summary Subcategory: Sodium Dichromate	455
18-2	Existing Regulations - Effluent Limitation Guidelines	456
18-3	Summary of Raw Waste Loadings Found in Screening and Verification Sampling	457
18-4	Priority Pollutant Raw Waste Loads	458
18-5	Water Usage in Sodium Dichromate Subcategory	462
18-6	Flow and Pollutant Concentration Data of the Sampled Waste Streams for Plant #493 Producing Sodium Dichromate	465
18-7	Flow and Pollutant Concentration Data of the Sampled Waste Streams for Plant #376 Producing Sodium Dichromate	467
18-8	Flow and Pollutant Concentration Data of the Sampled Waste Streams for Plant #398 Producing Sodium Dichromate	468

LIST OF TABLES (continued)

		Page
18-9	Effluent Control and Treatment Practices and Achievements at Sodium Dichromate Plants	475
18-10	Verification Sampling of Sodium Dichromate Plants	476
18-11	Control Parameter Limitations Subcategory: Sodium Dichromate	477
18-12	Control Parameter Limitations Subcategory: Sodium Dichromate	479
18-13	Model Plant Treatment Costs Subcategory: Sodium Dichromate	480
18-14	Model Plant Treatment Costs Subcategory: Sodium Dichromate	481
18-15	Model Plant Treatment Costs Subcategory: Sodium Dichromate	482
18-16	Model Plant Treatment Costs Subcategory: Sodium Dichromate	486
19-1	Subcategory Profile Data Summary Subcategory: Carbon Dioxide	488
19-2	Existing Regulations - Effluent Limitation Guidelines	489
20-1	Subcategory Profile Data Summary Subcategory: Carbon Monoxide and By-Product Hydrogen	491
20-2	Existing Regulations - Effluent Limitation Guidelines	492
21-1	Subcategory Profile Data Summary Subcategory: Copper Sulfate	494
21-2	Existing Regulations - Effluent Limitation Guidelines	495
21-3	Summary of Raw Waste Loadings Found at Copper Sulfate Plant #034	496
21-4	Water Usage in Copper Sulfate Subcategory	498
21-5	Flow and Pollutant Concentration Data of the Sampled Waste Streams for Plant #034 Producing Copper Sulfate	502

LIST OF TABLES (continued)

		Page
21-6	Verification Sampling of Copper Sulfate Plant #034	508
21-7	Control Parameter Limitations Subcategory: Copper Sulfate	510
21-8	Control Parameter Limitations Subcategory: Copper Sulfate	511
21-9	Model Plant Treatment Costs Subcategory: Copper Sulfate	513
21-10	Model Plant Treatment Costs Subcategory: Copper Sulfate	514
22-1	Subcategory Profile Data Summary Subcategory: Nickel Sulfate	516
22-2	Existing Regulations - Effluent Limitation Guidelines	517
22-3	Summary of Raw Waste Loadings Found in Screening and Verification Sampling	518
22-4	Priority Pollutant Raw Waste Loads	519
22-5	Water Usage in the Nickel Sulfate Subcategory	521
22-6	Flow and Pollutant Concentration Data of the Sampled Waste Streams for Plants Producing Nickel Sulfate	524
22-7	Waste Characteristics of Nickel Sulfate Plant #120	534
22-8	Control Parameter Limitations Subcategory: Nickel Sulfate	535
22-9	Control Parameter Limitations Subcategory: Nickel Sulfate	537
22-10	Model Plant Treatment Costs Subcategory: Nickel Sulfate	538
22-11	Model Plant Treatment Costs Subcategory: Nickel Sulfate	539
22-12	Model Plant Treatment Costs Subcategory: Nickel Sulfate	540
22-13	Model Plant Treatment Costs Subcategory: Nickel Sulfate	543

LIST OF TABLES (continued)

		Page
23-1	Subcategory Profile Data Summary Subcategory: Silver Nitrate	545
23-2	Existing Regulations - Effluent Limitation Guidelines	546
24-1	Subcategory Profile Data Summary Subcategory: Sodium Bisulfite	548
24-2	Existing Regulations - Effluent Limitation Guidelines	549
24-3	Summary of Raw Waste Loadings Found in Screening and Verification Sampling	550
24-4	Priority Pollutant Raw Waste Loads	551
24-5	Water Usage in the Sodium Bisulfite Subcategory	553
24-6	Flow and Pollutant Concentration Data of the Sampled Waste Streams for Plant #282 Producing Sodium Bisulfite	555
24-7	Flow and Pollutant Concentration Data of the Sampled Waste Streams for Plant #586 Producing Sodium Bisulfite	555
24-8	Flow and Pollutant Concentration Data of the Sampled Waste Streams for Plant #987 Producing Sodium Bisulfite	558
24-9	Treatment Practices and Verification Sampling at Sodium Bisulfite Plants	566
24-10	Control Parameter Limitations Subcategory: Sodium Bisulfite	568
24-11	Control Parameter Limitations Subcategory: Sodium Bisulfite	569
24-12	Control Parameter Limitations Subcategory: Sodium Bisulfite	570
24-13	Model Plant Treatment Costs Subcategory: Sodium Bisulfite	572
24-14	Model Plant Treatment Costs Subcategory: Sodium Bisulfite	573

LIST OF TABLES (continued)

		Page
24-15	Model Plant Treatment Costs Subcategory: Sodium Bisulfite	574
24-16	Model Plant Treatment Costs Subcategory: Sodium Bisulfite	577
25-1	Subcategory Profile Data Summary Subcategory: Sodium Hydrosulfite (Formate Process)	579
25-2	Existing Regulations - Effluent Limitation Guidelines	580
25-3	Summary of Raw Waste Loadings Found at a Sodium Hydrosulfite Plant (Formate Process)	582
25-4	Flow and Pollutant Concentration Data of the Sampled Waste Streams for Plant #672 Producing Sodium Hydrosulfite	587
25-5	Influent and Effluent Quality and Efficiency for Plant #672 Waste Water Treatment System Found During Screening Sampling	589
25-6	Screening Results from Sodium Hydrosulfite Plant #672	596
25-7	Control Parameter Limitations Subcategory: Sodium Hydrosulfite	597
25-8	Control Parameter Limitations Subcategory: Sodium Hydrosulfite	599
25-9	Model Plant Treatment Costs Subcategory: Sodium Hydrosulfite	600
25-10	Model Plant Treatment Costs Subcategory: Sodium Hydrosulfite	601
26-1	Subcategory Profile Data Summary Subcategory: Hydrochloric Acid	603
26-2	Existing Regulations - Effluent Limitation Guidelines	604
27-1	Subcategory Profile Data Summary Subcategory: Nitric Acid	606
27-2	Existing Regulations - Effluent Limitation Guidelines	607

LIST OF TABLES (continued)

		Page
28-1	Subcategory Profile Data Summary Subcategory: Sodium Carbonate	609
28-2	Existing Regulations - Effluent Limitation Guidelines	610
29-1	Subcategory Profile Data Summary Subcategory: Sodium Metal	612
29-2	Existing Regulations - Effluent Limitation Guidelines	613
30-1	Subcategory Profile Data Summary Subcategory: Sodium Silicate	615
30-2	Existing Regulations - Effluent Limitation Guidelines	616
31-1	Subcategory Profile Data Summary Subcategory: Sulfuric Acid	618
31-2	Existing Regulations - Effluent Limitation Guidelines	619
32-1	Subcategory Profile Data Summary Subcategory: Ammonium Chloride	621
32-2	Existing Regulations - Effluent Limitation Guidelines	622
33-1	Subcategory Profile Data Summary Subcategory: Ammonium Hydroxide	624
33-2	Existing Regulations - Effluent Limitation Guidelines	625
34-1	Subcategory Profile Data Summary Subcategory: Barium Carbonate	627
34-2	Existing Regulations - Effluent Limitation Guidelines	628
35-1	Subcategory Profile Data Summary Subcategory: Boric Acid	630
35-2	Existing Regulations - Effluent Limitation Guidelines	631

LIST OF TABLES (continued)

		Page
36-1	Subcategory Profile Data Summary Subcategory: Calcium Carbonate	633
36-2	Existing Regulations - Effluent Limitation Guidelines	634
37-1	Subcategory Profile Data Summary Subcategory: Cuprous Oxide	636
37-2	Existing Regulations - Effluent Limitation Guidelines	637
38-1	Subcategory Profile Data Summary Subcategory: Manganese Sulfate	639
38-2	Existing Regulations - Effluent Limitation Guidelines	640
39-1	Subcategory Profile Data Summary Subcategory: Strong Nitric Acid	642
39-2	Existing Regulations - Effluent Limitation Guidelines	643
40-1	Subcategory Profile Data Summary Subcategory: Oxygen and Nitrogen	645
40-2	Existing Regulations - Effluent Limitation Guidelines	646
41-1	Subcategory Profile Data Summary Subcategory: Potassium Iodide	648
41-2	Existing Regulations - Effluent Limitation Guidelines	649
42-1	Subcategory Profile Data Summary Subcategory: Sodium Hydrosulfide	651
42-2	Existing Regulations - Effluent Limitation Guidelines	652
43-1	Subcategory Profile Data Summary Subcategory: Sodium Silicofluoride	654
43-2	Existing Regulations - Effluent Limitation Guidelines	655

LIST OF TABLES (continued)

		Page
44-1	Subcategory Profile Data Summary Subcategory: Sodium Thiosulfate	657
44-2	Existing Regulations - Effluent Limitation Guidelines	658
45-1	Subcategory Profile Data Summary Subcategory: Sulfur Dioxide	660
45-2	Existing Regulations - Effluent Limitation Guidelines	661

SECTION 1.0

CONCLUSIONS AND SUMMARY

1.1 PRIORITY POLLUTANTS

This study has shown that certain priority pollutants, particularly the 13 metals, cyanide and asbestos are present in significant amounts in process waste waters generated by plants in 11 of the 35 inorganic chemical product subcategories screened. Very few of the listed organic priority pollutants were found in process waste streams and those that were identified, in most cases, were not present in significant amounts.

The results of the screening sampling program are given in support of 24 candidate subcategory exclusions in accordance with the provisions of Paragraph 8 of the Settlement Agreement in Natural Resources Defense Council, et al. v. Train (June 8, 1976). Those screening results which indicated the presence of priority pollutants in significant amounts were largely confirmed by the results of the verification program. Verification sampling accounted for 50 to 75 percent of the current inorganic chemical production rate in the subcategories covered.

The sources of most of the priority pollutants found in the raw wastes and treated effluents can be traced to specific process related raw materials and chemicals used in the manufacturing operations. In the case of certain pollutants found in widely varying amounts or with erratic frequencies of occurrence, the precise identities of the sources remain unknown at this time, but are suspected to be process-related.

1.2 CONTROL AND TREATMENT TECHNOLOGY

A considerable amount of priority pollutant removal is presently achieved in the industry by the existing control and treatment practices. Additional removal can be accomplished by the application of available and demonstrated technologies which

would add to or modify existing treatment systems. Recovery of the heavy metals for value or reuse in a process does not appear to be an attractive alternative in those industries where the product recovery practices now in effect do not already accomplish this.

The treatment of priority metal-bearing waste streams results in the production of sludges or residues which are potentially hazardous and may require special means for handling and disposal. The massive sludges composed of calcium sulfate with relatively low concentrations of priority metals can safely be handled in on-site disposal areas with proper runoff and leachate control; however, the smaller volume wastes having high concentrations of metals would require storage in a lined pond and/or removal to a safe chemical landfill site.

1.3 COSTS OF ADDITIONAL IN-PLANT TREATMENT

The estimated incremental costs of applying the candidate BAT treatment options represent a relatively small proportion of the investment and operating and maintenance costs already committed to the existing BPT level treatment systems. These costs, however, vary widely from industry to industry and are highly dependent on site-specific factors.

1.4 SUBCATEGORIZATION

A review of the product/process basis for subcategorization of the 15 inorganic chemicals designated for initial study revealed that certain modifications may be appropriate in the interest of developing effective regulations. The priority pollutant problem per se impacts subcategorization directly only in the Chlor-Alkali Industry where the use of graphite anodes contributes to the generation of chlorinated hydrocarbons. In the Titanium Dioxide Industry, major process and raw material differences may justify the creation of a separate segment for the chloride process using ilmenite ore. The rationale is presented for creating a subcategory for the combined production of hydrofluoric acid and aluminum fluoride in view of their similar waste characteristics and the current practice of combined treatment at several plants. Hydrogen cyanide production may be logically subdivided into segments on the basis of the major process differences related to the Andrussow Process and HCN production as a by-product in the manufacture of acrylonitrile.

1.5 RESTUDY OF REMANDED REGULATIONS

In response to the issues raised by the Fourth Circuit, U.S. Court of Appeals in remanding effluent limitations guidelines promulgated for 11 major inorganic chemical products, factors affecting the control and treatment of pollutant discharges in those industries have been studied. It has been concluded that alternative control and treatment technologies to those originally considered for BAT and NSPS may be appropriate and a reunion of the corresponding effluent limitations guidelines and new source performance standards should be considered.

SECTION 2.0

RECOMMENDATIONS

On the basis of the priority pollutant screening and verification results and the evaluation of applicable technologies for discharge control and treatment, it is recommended that effluent limitation guidelines, new source performance standards and pretreatment standards for new and existing sources be proposed for 11 inorganic chemical manufacturing subcategories. These include:

Chlor-alkali
Hydrofluoric Acid
Titanium Dioxide
Aluminum Fluoride
Chrome pigments
Hydrogen Cyanide
Sodium Dichromate
Copper Sulfate
Nickel Sulfate
Sodium Bisulfite
Sodium Hydrosulfite

In addition, it is recommended that alternative effluent limitations guidelines and standards of performance to those which had been promulgated and subsequently remanded for restudy be proposed for seven inorganic chemical subcategories. These are industries in which priority pollutant discharges have not been found in significant quantities, but require appropriate regulations on the discharge of conventional and nonconventional pollutants. The subcategories included are:

Hydrogen Peroxide
Hydrochloric Acid
Nitric Acid
Sodium Carbonate
Sodium Metal
Sodium Silicate
Sulfuric Acid

SECTION 3

INTRODUCTION

3.1 AUTHORITY

3.1.1 The Federal Water Pollution Control Act Amendments

The Federal Water Pollution Control Act (the Act) Amendments of 1972 stated the national goal of attaining by, July 1, 1983, a water quality which provides for the protection and propagation of fish and shellfish, for recreation in or on the water, and the goal of eliminating the discharge of pollutants into navigable waters by 1985.

The Act provides for the achievement of these goals in three steps by requiring the estblishment of technology-based effluent limitations and standards of performance. Section 301 (b) of the Act requires, as the first step attainment by July 1, 1977, of effluent limitations for point sources, other than publicly owned treatment works (POTW), based on the application of the best practicable control technology currently available (BPCTCA, or simply BPT) as defined by the Administrator pursuant to Section 304 (b). As the second step, the Act as amended an 1977 now requires the application of effluent limitations for point sources, other than POTW's, of the best available technology economically achievable (BATEA, or simply BAT) by July 1, 1984, for the control of specific toxic pollutants as identified in accordance with Section 307 (a). The third and final step in achievement of the goal to eliminate all discharge of pollutants into navigable waters by 1985.

The United States Environmental Protection Agency (the Agency) entrusted with the responsibility to carry out the requirements of the Act, initiated an intensive effort to develop the necessary regulatory means which would achieve the stepwise reduction and elimination of pollutant discharge practices in all major U.S. Industries. For the Inorganic Chemicals Manufacturing Point Source Category, the Agency designed a comprehensive, two phase program to identify the control parameters and establish the technological basis for regulations development. Phase I covered 22 Major Inorganic Chemical Products, (1) and the final regulations for these industrial

subcategories were published in the Federal Register on March 12, 1974. The regulations included specific numerical effluent limitations and standards of performance applicable to the three steps of pollutant control for both existing and new sources. Zero-discharge requirements specified for many of the subcategories were to be applied either at the 1977 BPT step or later. Phase II of the Agency's effort resulted in the promulgation of BPT based effluent limitations for an additional group of 27 subcategories referred to as Significant Inorganic Chemical Products (2). The interim final regulations were published on May 22, 1975. Taken together, the two groups of regulations cover 49 inorganic chemical subcategories many of which include more than one specific chemical product. Although some toxic pollutant parameters were covered in cases where a direct relationship to the process was obvious (e.g., mercury and/or lead in the Chlor-alkali Industry), the main thrust of the regulations was the control of the bulk pollutant parameters which accounted, in terms of quantity, for most of the pollution loading of navigable waters attributable to the manufacture of inorganic chemicals.

3.1.2 Court Remand of Regulations

On March 10, 1976, the United States Court of Appeals for the Fourth Circuit decided in E.I. DuPont de Nemours & Company, et al. v. Train No. 74-1261, to set aside and remand for reconsideration a number of general definitions and specific discharge regulations promulgated in 1974. These regulations are all within Title 40, Parts 401 and 415 of the Code of Federal Regulations and are listed below:

General Provisions
- 401.11 (i) - Definition of effluent limitations
- 401.11 (q) - Definition of process waste water
- 401.11 (r) - Definition of process waste water pollutant

Chlor-Alkali
- 415.63 - 1983 step

Hydrochloric Acid
- 415.72 - 1977 step
- 415.73 - 1983 step
- 415.75 - New sources

Hydrofluoric Acid
- 415.82 - 1977 step

415.83 - 1983 step
415.85 - New sources

Hydrogen Peroxide
415.93 - 1983 step
415.95 - New sources

Nitric Acid
415.102 - 1977 step
415.103 - 1983 step
415.105 - New sources

Sodium Carbonate
415.152 - 1977 step
415.153 - 1983 step
415.155 - New sources

Sodium Dichromate
415.173 - 1983 step

Sodium Metal
415.182 - 1977 step
415.183 - 1983 step
415.185 - New sources

Sodium Silicate
415.192 - 1977 step
415.193 - 1983 step
415.195 - New sources

Sulfuric Acid
415.210 - Applicability
415.212 - 1977 step
415.213 - 1983 step
415.215 - New sources

Titanium Dioxide
415.220 - Applicability
415.222 - 1977 step
415.223 - 1983 step
415.225 - New sources

In the majority of cases the main target of the remand was the zero discharge regulations from which the industry petitioners sought relief on grounds of technological infeasibility. During 1975, the Agency funded a special study of the remand issues (3) and was prepared to propose amended regulations. Where appropriate, the results of that study are included in an Addendum to the present report covering those remanded regulations for subcategories which have been excluded from the present study.

Following the court remand of the above indicated Phase I final regulations, the Agency revoked the Phase II interim final and proposed regulations published in May, 1975, for Aluminum Fluoride, Chrome Pigments, Hydrogen Cyanide, and Sodium Silicofluoride. In this instance, the Agency's intent was to reconsider the specific effluent limitations established for these industries (1977 step) in the light of information made available on process differences between plants and additional data on the actual concentrations and treatability of the regulated discharge constituents. The information was presented to the Agency in the form of various documents prepared by members of the industries concerned. These sources are also cited in the appropriate sections of this report.

3.1.3 The Settlement Agreement

Following legal action brought by four environmental groups in Natural Resources Defense Council v. Train, the Agency entered into an agreement dated June 8, 1976. In this Settlement Agreement, the Agency agreed to regulate 65 toxic pollutants under Sections 301, 304, 306 and 307 of the Act in accordance with the schedule and provisions stipulated. The original list of 65 chemicals and classes of chemicals attached to the Settlement Agreement was redefined to cover 129 chemical substances, including specific organic compounds, pesticides and their metabolites, polychlorinated biphenyls (PBC's), cyanide, 13 heavy metals and asbestos. These substances are listed in Table 3-1.

Table 3-1 Recommended List of Priority Pollutants

Compound Name

1. *Acenaphthene
2. *Acrolein
3. *Acrylonitrile
4. *Benzene
5. *Benzidine

6. *Carbon tetrachloride (tetrachloromethane)

*Chlorinated benzenes (other than dichlorobenzenes)

7. *Chlorobenzene
8. 1,2,4-Trichlorobenzene
9. Hexachlorobenzene

*Chlorinated ethanes (including 1,2-dichloroethane, 1,1,1,-trichloroethane and hexachloroethane)

10. 1.2-Dichloroethane
11. 1,1,1-Trichloroethane
12. Hexachloroethane
13. 1,1-Dichloroethane
14. 1,1,2-Trichloroethane
15. 1,1,2,2-Tetrachloroethane
16. Chloroethane

*Chloroalkyl ethers (chloromethyl, chloroethyl and mixed ethers)

17. Bis(chloromethyl) ether
18. Bis(2-chloroethyl) ether
19. 2-Chloroethyl vinyl ether (mixed)

*Chlorinated naphthalene

20. 2-Chloronaphthalene

*Chlorinated phenols (other than those listed elsewhere; includes trichlorophenols and chlorinated cresols)

21. 2,4,6-Trichlorophenol
22. Parachlorometa cresol
23. *Chloroform (trichloromethane)
24. *2-Chlorophenol

*Dichlorobenzenes

25. 1,2-Dichlorobenzene
26. 1,3-Dichlorobenzene
27. 1,4-Dichlorobenzene

*Dichlorobenzidine

28. 3,3'-Dichlorobenzidine

*Dichloroethylenes (1,1-dichloroethylene and 1,2-dichloroethylene)

29. 1,1-Dichloroethylene
30. 1,2-Trans-dichloroethylene
31. *2,4-Dichlorophenol

*Dichloropropane and dichloropropene

32. 1,2-Dichloropropane
33. 1,2-Dichloropropylene (1,3-dichloropropene)
34. *2,4-Dimethylphenol

*Dinitrotoluene

35. 2,4-Dinitrotoluene
36. 2,6-Dinitrotoluene
37. *1,2-Diphenylhydrazine
38. *Ethylbenzene
39. *Fluoranthene

*Haloethers (others than those listed elsewhere)

40. 4-Chlorophenyl phenyl ether
41. 4-Bromophenyl phenyl ether
42. Bis(2-chloroisopropyl) ether
43. Bis(2-chloroethoxy) methane

*Halomethanes (other than those listed elsewhere)

44. Methylene chloride (dichloromethane)
45. Methyl chloride (chloromethane)
46. Methyl bromide (bromomethane)
47. Bromoform (tribromomethane)
48. Dichlorobromomethane
49. Trichlorofluoromethane
50. Dichlorodifluoromethane
51. Chlorodibromomethane
52. *Hexachlorobutadiene
53. *Hexachlorocyclopentadiene
54. *Isophorone
55. *Naphthalene
56. *Nitrobenzene

*Nitrophenols (including 2,4-dinitrophenol and and dinitrocresol)

57. 2-Nitrophenol
58. 4-Nitrophenol
59. 2,4-Dinitrophenol
60. 4,6-Dinitro-o-cresol

*Nitrosamines

61. N-nitrosodimethylamine
62. N-nitrosodiphenylamine
63. N-nitrosodi-n-propylamine
64. *Pentachlorophenol
65. *Phenol

*Phthalate esters

66. Bis(2-ethylhexyl) phthalate
67. Butyl benzyl phthalate
68. Di-n-butyl phthalate
69. Di-n-octyl phthalate
70. Diethyl phthalate
71. Dimethyl phthalate

*Polynuclear aromatic hydrocarbons

72. Benzo(a)anthracene (1,2-benzanthracene)
73. Benzo (a) pyrene (3,4-benzopyrene)
74. 3,4-Benzofluoranthene
75. Benzo(k)fluoranthane (11,12-benzofluoranthene)
76. Crysene
77. Acenaphthylene
78. Anthracene
79. Benzo(ghi)perylene (1,12-benzoperylene)
80. Fluorene
81. Phenanthrene
82. Dibenzo (a,h)anthracene (1,2,5,6-dibenzanthracene)
83. Indeno (1,2,3-cd)pyrene (2,3,-o-phenylenepyrene)
84. Pyrene
85. *Tetrachloroethylene
86. *Toluene
87. *Trichloroethylene
88. *Vinyl chloride (chlorethylene)

*Pesticides and Metabolites

89. *Aldrin
90. *Dieldrin
91. *Chlordane (technical mixture & metabolites)

DDT and metabolites

92. 4,4'-DDT
93. 4,4'-DDE (p,p'-DDX)
94. 4,4'DDD (p,p'-TDE)

*Endosulfan and metabolites

95. A-endosulfan-Alpha
96. B-endosulfan-Beta
97. Endosulfan sulfate

*Endrin and metabolites

98. Endrin
99. Endrin aldehyde

*Heptachlor and metabolites

100. Heptachlor
101. Heptachlor epoxide

*Hexachlorocyclohexane (all isomers)

102. A-BHC-Alpha
103. B-BHC-Beta
104. R-BHC (lindane)-Gamma
105. G-BHC-Delta

*Polychlorinated biphenyls (PCB's)

106. PCB-1242 (Arochlor 1242)
107. PCB-1254 (Arochlor 1254)
108. PCB-1221 (Arochlor 1221)
109. PCB-1232 (Arochlor 1232)
110. PCB-1248 (Arochlor 1248)
111. PCB-1260 (Arochlor 1260)
112. PCB-1016 (Arochlor 1016)
113. *Toxaphene
114. *Antimony (Total)
115. *Arsenic (Total)
116. *Asbestos (Fibrous)
117. *Beryllium (Total)
118. *Cadmium (Total)
119. *Chromium (Total)
120. *Copper (Total)
121. *Cyanide (Total)
122. *Lead (Total)
123. *Mercury (Total)
124. *Nickel (Total)
125. *Selenium (Total)
126. *Silver (Total)
127. *Thallium (total)
128. *Zinc (Total)
129. **2,3,7,8-Tetrachlorodibenzo-p-dioxin (TCDD)

*Specific compounds and chemicals classes as listed in the Consent Decree.

**This compound was specifically listed in the Consent Decree. Because of the extreme toxicity of TCDD, the Agency recommended that laboratories not acquire analytical standards for this

compound.

The Settlement Agreement also identified 21 point source categories and specified the scope of application of effluent limitations, new source performance standards, and pretreatment standards within each category in terms of the Standard Industrial Classification (SIC) code numbers. For the Inorganic Chemicals Manufacturing Point Source Category, the major industries included are:

SIC 2812 - Alkalies and Chlorine
SIC 2813 - Industrial Gases
SIC 2816 - Inorganic Pigments
SIC 2819 - Industrial Inorganic Chemicals, Not Elsewhere Classified

Within these industries, the Agency has identified 63 subcategories listed in Table 3-2 for the initial study of the priority toxic pollutant problem. Most of these subcategories, 49 in all, had already been covered by BPT and BAT discharge regulations promulgated in 1974 and 1975. Those regulations established point of discharge control levels for the conventional parameters such as pH, TSS, TOC, BOD, and oil and grease. In many cases, specific chemical parameters were regulated, particularly As, Cr, Cu, Hg, Ni, Pb, Se, Zn, and cyanide, which are now included in the list of priority toxic pollutants. Other regulated parameters such as Al, Ba, Fe, ammonia, fluoride and sulfide are not presently listed as toxic chemicals but are to be treated as nonconventional pollutants under future discharge limitations and standards of performance.

Nearly half of the initial 63 subcategories have been recommended for exclusion from this study on the basis of specific provisions for such exclusion under Paragraph 8 of the Settlement Agreement. The bases for these exclusions are as follows:

No. 63, Ferrous Sulfate, is already covered by the Titanium Dioxide - Sulfate Process subcategory and does not require separate consideration.

Nos. 60, 61, and 62 have only one plant each (or one plant with a wet process discharge), and represent nonsignificant discharges of toxic pollutants. Nos. 27 and 28 are also single plants, but were covered in screening.

Nos. 36 through 56 have existing BPT regulations requiring zero discharge of process waste water to navigable water and there are no known discharges

to a POTW. Continued enforcement of the existing regulations will provide adequate control of toxic pollutants.

The remaining 35 nonexcluded subcategories (Table 3-2, Nos. 1 through 35) are covered in this report. This group also includes the 11 subcategories whose final regulations were remanded for restudy in E.I. DuPont de Nemours and Company, et. al. v. Train, and the four additional subcategories whose interim final or proposed regulations were revoked and reserved by the Agency.

It was anticipated by the Agency that a substantial number of the 35 industries to be screened would also qualify for exclusion under Paragraph 8 on the basis of the analytical results obtained from the process waste water priority pollutant screening program. A preliminary prioritization indicated that the initial detailed study and regulation development would focus on the first 15 subcategories.

This judgment has been substantially supported by the analytical results of the screening programs and a number of additional exclusions are being recommended for subcategories in which nonsignificant priority pollutant discharges have been determined. A detailed presentation of the analytical results is given under the individual subcategory sections of this report. The additional recommended exclusions include the following:

No.	Subcategory
1.	Hydrogen Peroxide
2.	Carbon Dioxide
3.	Carbon Monoxide/Hydrogen
4.	Hydrochloric Acid
17.	Nitric Acid
19.	Sodium Metal
21.	Sulfuric Acid
22.	Ammonium Chloride
23.	Ammonium Hydroxide
24.	Barium Carbonate
26.	Calcium Carbonate
27.	Copper Oxide (one plant)
28.	Manganese Sulfate (one plant)
29.	Strong Nitric Acid
30.	Oxygen and Nitrogen
31.	Potassium Iodide
32.	Sodium Hydrosulfide
34.	Sodium Thiosulfate

35. Sulfur Dioxide

In addition, Sodium Carbonate (No. 18) and Boric acid (No. 25) are being considered as candidates for exclusion and recommendations will be made following the evaluation of additional process waste sampling results.

The four remaining subcategories will be included for screening under Phase II of the inorganic chemicals study. These are:

13. Silver Nitrate (to be combined with silver bromide, silver chloride, and other inorganic silver compounds)
57. Calcium chloride
58. Sodium Chloride
59. Sodium Sulfite

3.2 GENERAL APPROACH AND METHODOLOGY

Initiating and undertaking a comprehensive study of the priority pollutant problem in the Inorganic Chemicals Industry was necessarily preceded by an intensive evaluation by the Agency of the kinds of data and supporting information that should be assembled as a basis for the development of regulations. All major decisions on the identity of pollutants and the establishment of effluent limitations and standards of performance for each subcategory had to be supportable by documented evidence collected from operating production facilities. Similarly, the necessary information on production rates, processes, raw materials, water use, waste sources, and treatment technologies in practice had to be acquired with sufficient detail and breadth of coverage to permit an analysis of the engineering and economic variables that are characteristic of each subcategory. Priority pollutant control regulations would be based on the application of best available technology for treatment and reliable performance evaluations for the removal of specific waste substances.

The following paragraphs briefly describe the major study tasks and their results as they are presented in this report.

3.2.1 Industry Data Base Development and Subcategorization Review

Information from individual manufacturers and previous study documents were reviewed in detail and an evaluation of the appropriateness of subcategorization was performed. Section 4 presents a discussion of the factors considered in

subcategorization and presents rationale for maintaining the present scheme of subcategorization for the industries studied.

3.2.2 The Screening and Verification Sampling Programs

The collection of detailed analytical data on conventional, nonconventional and priority pollutant concentrations in raw and treated process waste streams was completed in a two-phase sampling program. The first phase, for screening, was designed to provide a representative, one-time 72-hour sampling of a plant in each subcategory in order to determine the presence of priority pollutants and to evaluate their potential environmental significance. The sampling and analytical methodology is described in Section 5, along with the basis for making a decision on the need for verification sampling in each subcategory.

3.2.3 Engineering Evaluations

Section 6 describes the procedures and sources used in developing the industry productions and wastewater generation characteristics that form the basis of the model plant concept. The sources of detailed process and waste treatment information are also presented. Section 7 contains an evaluation of treatment technology presently applied in BPT systems and advanced technologies that may be recommended for BAT and NSPS applications. Section 8 provides estimates of the treatability of selected priority and nonconventional pollutants to be applied in the development of achievable performance characteristics for specific technologies. Section 8 also presents a discussion of the approach taken in the statistical analysis of long term monitoring data. The statistically derived parameters, including variability factors for 24-hour maximum and 30-day averages are presented in Appendix A. Section 9 lays the groundwork for the estimation of pollutant removal performances for each nonexcluded subcategory. The candidate priority pollutants to be controlled in each subcategory are identified on the basis of the screening and verification data and the rationale for the application of advanced level technologies is presented.

3.2.4 Treatment System Cost Estimates

Section 10 presents the general approach to cost estimating, discusses the assumptions made, and gives the detailed cost estimates for alternative levels of treatment and control. For each subcategory verified, the total estimated installed cost of a typical BPT treatment system is developed on the basis of the model plant design specifications and estimated incremental costs are given for each of the advanced level treatment alternatives.

SECTION 4

SUBCATEGORIZATION REVIEW

4.1 BASIS FOR SUBCATEGORIZATION

4.1.1 Factors Considered

The inorganic chemicals industry is very large and diversifed and therefore has been segmented into subcategories for the purpose of establishing effluent guidelines. Factors taken into consideration for subcategorization include: raw materials used, product produced, manufacturing process employed, geographical location, size and age of equipment and facility involved, nonwater quality aspects of waste characteristics, water pollution control technology, treatment costs, energy requirements and solid waste disposal. Following is a discussion of each of the general factors considered for this industry.

Raw Material

Different raw materials are used to manufacture a wide variety of products, and vary from raw brines and ores to pure reagent chemicals. Some proceses use waste or by-product streams from other plants or from other processes within the same plant.

Because of this diversification, raw material characteristics do not generally constitute a logical basis for subcategorization. Variations in raw material quality or purity are not normally sufficient to cause a great difference in waste water treatment needs, except in the case of trace toxic materials which may occur in some sources but not in others.

Dominant Product

Subcategorization by chemical name of the dominant inorganic chemical produced involves the least ambiguity in applying standards to a given point source. This is critical because of the great variety of product mix, manufacturing processes, waste water constituents, and other factors at existing plants. Subcategorization by product becomes less useful as product mix increases in complexity because multi-product waste water also becomes more complex and less susceptible to simple uniform

treatment.

A subcategory established on the basis of product manufactured might have two or more different processes but, in the majority of cases, the characteristic of the waste waters is similar and the same treatment technology can be applied for different process waste waters. If two or more dissimilar processes produce waste water of different quality, and different treatment technologies have to be used, then the subcategory has to be further classified or segmented, for example, the Chlor-alkali Industry.

Manufacturing Process

Typically, inorganic chemicals are manufactured for captive or merchant use in four or more steps starting from raw material to final product. Two or more different products might use the same process but then the raw materials used, process sequence, control, recycle potential, handling, and quality control will vary, producing wastes of different quality. Primary subcategorization, therefore, by process is unlikely to be useful. However, secondary subcategorization by process has been necessary in some cases.

Geographical Location

Inorganic chemical plants exist in all parts of the United States but subcategorization on this basis is not appropriate. Geographical location is important in analyzing the feasibility of various treatment alternatives. Evaporation ponds are functional only in areas where evaporation exceeds rainfall. Ocean dumping and deep well disposal are possible only in certain areas, and must be consistent with local, State and Federal laws. The possibility of ground water contamination may preclude the use of unlined holding and settling ponds in many locations.

Thus the influence of geography, climate, geology, etc. is reflected in waste treatment modifications and is primarily manifest in the cost of treatment. This, of itself, is not a good basis for subcategorization.

Plant Size

Plant size and production capacity were not found to affect the characteristics of the waste produced. Although plant size can affect treatment cost, this variability can be expressed graphically or mathematically without the need for further segmentation of the category.

Plant Age

Plant age is not related to waste water volume and it is not a factor in terms of waste water quality. Because most plants have been enlarged or modified from their original status, plant age is not easily calculated and therefore not a reasonable basis for subcategorization.

Nonwater Quality Characteristics

Airborne emissions from manufacturing operations can be kept within air quality control limits through the use of cyclones, wet scrubbers and other methods. The nature of the air pollution is related to the products(s) manufactured and/or the raw material used. Since both of these elements vary widely within the inorganic chemicals industry, there is no logic in subcategorization on the basis of nonwater quality characteristics.

Treatment Cost

From a technical viewpoint, subcategorization by common technological requirements for treatment processes could provide a logical basis for selecting one or more unit processes to accomplish the same treatment function, regardless of the source. For example, residuals of dissolved heavy metals will respond to lime precipitation and sedimentation at high pH without respect to the specific origin of the metals. This "building block" concept could conceivably result in selecting various combinations of unit processes to meet the treatment requirements. However, if the treatment cost must be expressed in terms of dollars per unit production, this method of subcategorization crosses product lines and interferes with comparison of treatment costs based on the production of a specific chemical. Even if the unit operation is commonly applicable for treating waste flows of different products, the cost of treatment will vary due to variations in quality, loading and flow rates and therefore subcategorization on the basis of treatment cost is not recommended.

Energy Cost

Manufacturing processes in the Inorganic Chemicals Industry typically have large energy requirements. In contrast, waste water treatment processes consume a small fraction of the total energy used. There appears to be no major energy requirements for the waste water treatment facility and subcategorization on the basis of energy cost is not justified.

Solid Waste

Not all inorganic manufacturing processes produce solid wastes. Those that do practice various disposal methods, such as on-site landfills, contract hauling to approved dump sites or incineration. Solid waste disposal becomes very site specific and exhibits a wide range of costs. Due to the lack of uniformity within the industry, solid waste generation and disposal practices are not considered to be a satisfactory basis for subcategorization

4.1.2 General conclusions

If effluent limitations are to be tied to units of production, only one method of primary subcategorization is broadly applicable to the inorganic chemicals point source category; that is, subdivision by dominant product. However, there are two subcategories, chlorine and titanium dioxide, which need further subdivision based on the difference in the quantity and quality of the waste water from the processes.

4.2 SECONDARY SUBCATEGORIZATION

4.2.1 Chlor-Alkali

Mercury and diaphragm cells are the two distinct types of electrolytic cells that are currently used in the production of chlorine and caustic soda. Major process differences between mercury cell and diaphragm cell plants produce corresponding differences in the volume and nature of waste water generated. A principal difference is the presence of mercury as a contaminant in the waste waters from the mercury cell process and asbestos in the diaphragm cell plant wastes. In addition, the total suspended solids (TSS) discharges from the two processes are significantly different. The TSS discharges from diaphragm cell plants are generally larger than from mercury cell plants, due to the higher volumes of contact and noncontact water used. Also, in diaphragm cells a large amount of water is used and an appreciable quantity of waste water is produced in the caustic evaporation process. Such water is not produced in mercury cell plants. The quantity of waste water generated from the diaphragm cell plants is almost double that of the mercury cell plants for the same chlorine production capacity. Based on the quantity and characteristics of the waste water, further subcategorization is justified.

4.2.2 Titanium Dioxide

Two major ores, rutile and ilmenite, are used for the manufacture of titanium dioxide. The ilmenite ore contains 40-70 percent titanium dioxide (TiO_2), up to 35 percent ferrous oxide, and 25 percent ferric oxide. Rutile ore contains 90 percent TiO_2. Two processing techniques, the sulfate process and the chloride process, are used to extract titanium dioxide from the ores.

The sulfate process uses ilmenite ore and sulfuric acid as raw materials. The chloride process uses rutile ores and chlorine. The high grade rutile ore is expensive and its availability is declining. New technological advances in recent years have alleviated the raw material shortage problem. By upgrading the ilmenite ore quality, the chloride process can be used to produce titanium dioxide of high purity. Because of the difference in quality and quantity of waste waters generated from the sulfate and chloride processes using the two different ores, the titanium dioxide industry may be further subdivided into three segments as follows:

a) Sulfate process

b) Chloride process using rutile ore

c) Chloride process using ilmenite ore

The sulfate process generates large amounts of strong and weak sulfuric acid water-borne wastes. Application of pollution control technology to the acid wastes generates about five times as much gypsum as product. The chloride process generates large amounts of dissolved metal chlorides and the treatment technology is expensive. Solid waste from both processes present difficult disposal problems. These solids include ferrous sulfate and a hydrated by-product from the sulfate process and heavy metal sludges from the chloride process. Ilmenite ore has to be upgraded before it is used to extract titanium dioxide by the chloride process, and this beneficiation process step generates additional wastes.

Ilmenite ore is a low-grade ore containing 40-70 percent TiO_2 before the use of chloride process. The beneficiation process creates some additional wastes streams. There is more than one patented beneficiation process and one of the processes claims that no waste water is generated and only a solid waste needs to be treated or disposed of separately. Thus the same treatment technology can be used for both the rutile and upgraded ilmenite ore for the process waste water except the additional treatment of some streams generated from the beneficiation step.

Therefore, further subclassification based on the amount and

characteristics of the waste water appears to be justified, and the three process subdivisions indicated above are appropriate for this purpose.

4.2.3 Hydrogen Cyanide

Hydrogen cyanide is made from two different processes, the Andrussow process and as a by-product of acrylonitrile manufacture. In the Andrussow process, air, ammonia, and natural gas are reacted to produce the dominant product hydrogen cyanide.

Water-borne wastes from the process consist principally of ammonia and sulfates in addition to cyanide and nitriles.

The dominant product in the other process is acrylonitrile. The required treatment technology for the Andrussow process is not applicable to the HCN by-product stream in an acrylonitrile plant since neither solid nor water borne wastes are generated. All tail gas streams are burned to destroy any unrecoverable HCN before venting to the atmosphere. Further subclassification by process seems logical.

4.3 INTEGRATION OF SUBCATEGORIES

4.3.1 Hydrofluoric Acid and Aluminum Fluoride

Aluminum fluoride is predominantly produced by the reaction of hydrated alumina with hydrogen fluoride, although one plant produces aluminum fluoride from fluorosilicic acid, a by-product of phosphoric acid. With one exception, all the aluminum fluoride plants are integrated with hydrogen fluoride (or hydrofluoric acid) production.

The two major uses of hydrogen fluoride are in the fluorocarbon industry and as raw material in the manufacture of aluminum fluoride. A ban on the fluorocarbon propellants has curtailed the use of hydrogen fluoride in that industry and it will be completely stopped in 1978. The selling of hydrogen fluoride in the merchant market will decline in the future and the primary use will be limited to the production of aluminum fluoride and fluorocarbon plastics (e.g., Teflon, Kel-F, etc.) until some other major use is found.

For both products (HF and AlF_3), process waste waters are generated by the various gas scrubbers and by leaks and spills. In both cases, air pollution control scrubber effluents contain mainly fluoride, acidity and sulfate. The fluoride is present as the free ion as well as various complex fluoro anions. Calcium fluoride, generated as a solid waste, is a disposal problem for

both the subcategories because of its moderate toxicity. Only one additional solid waste, gypsum (calcium sulfate), is generated from the hydrogen fluoride manufacture alone, and it can be treated and handled independently.

Combining hydrofluoric acid and aluminum fluoride into a single subcategory does not appear to offer any regulatory advantages when the two products are manufactured at the same plant location. The waste waters associated with the two products are similar and a common treatment facility is normally utilized. However, the combined manufacture of these products does not in itself create a unique or unusual situation, either with regard to the waste water treatement requirements or the compliance with discharge regulations. Although the waste gypsum produced at an HF plant supplies enough calicium for adequate fluoride removal from neutralized scrubber waste waters generated by both HF and AIF3 production, the applied treatment technology is essentially the same as that applied by manufacturers of either product alone. Therefore, the effluent water quality and the mass emission limitations would also be expected to be the same. Further, the opportunities for drip acid recycle (or the hydrolysis of complex fluorides prior to treatment) and scrubber water recycle are a function of plant design and age, rather than product mix.

In view of these considerations, a recommendation for the creation of an HF/AIF3 combined product subcategory is not being made at this time.

4.4 SUMMARY

The recommended subcategorization with process subdivisions include the following:

Subcategory	Process Subdivisions
Chlor-Alkali	Mercury Cell
	Diaphragm Cell
Titanium Dioxide	Sulfate
	Chloride-Rutile
	Chloride-Ilmenite
Hydrogen Cyanide	Andrussow Process
	Acrylonitrile By-Product

SECTION 5

SCREENING AND VERIFICATION SAMPLING PROGRAMS

5.1 SCOPE AND METHODOLOGY

The specific objective of the sampling programs was to establish the extent of the need for regulation of priority pollutant discharges in the inorganic chemicals industry in terms of factual information derived from the chemical analysis and flow measurement of representative process raw waste water streams and treated effluents. Prior to this study, most of the information available on priority pollutants in this industry has been concerned with a relatively small number of known process-related substances contaminating a variety of direct and indirect contact process waters which may be discharged from a production facility. There had been no previous requirement for a comprehensive survey of waste water chemistry addressing the possibility that a large number of other potentially toxic substances could be present, albeit at extremely low concentrations.

The screening phase of the sampling program was designed to ascertain the presence in each subcategory of any of the 129 listed priority pollutants at raw waste concentrations or daily loadings which, if untreated, could be environmentally significiant. Screening is based on the sampling of one or more typical manufacturing operations in each subcategory. Where such pollutant concentrations were found, additional plants were sampled during the verification phase for confirmation and further quantification of data on the particular priority pollutants in question. As a goal, screening and verification sampling, in each subcategory where priority pollutants were found in significant concentrations, would cover a sufficient number of plants to account for 75 percent or more of the current total U.S. Production.

A detailed description of the screening and verification programs is presented in the paragraphs below.

5.1.1 Selecting Plants and Making Preliminary Contacts

In each subcategory, plants were selected for screening on the basis of the following general criteria:

1. Minimal product mix and no organic product lines which could increase the potential for inter-process cross contamination of waste waters.

2. Presence of a physical chemical treatment facility rather than a biological one, or no treatment system. (Biological systems are neither widely used nor generally applicable in the inorganic chemicals industries.)

3. Manufacture of industrial grade products in volume, rather than low volume reagent grade products.

4. Median production capacity within the subcategory.

5. Segregated waste streams to facilitate sampling.

6. NPDES discharges rather than POTW discharges, since treatment for a NPDES discharge is usually more extensive.

7. Geographical clustering of selected plants to facilitate field logistics.

Plants were identified which satisfied as many of the criteria as possible, and preliminary contacts with corporate representatives were made by phone. If requested, a letter was written to describe the objectives of the sampling program and to cite the legal authority of the Agency and its sampling contractor under Section 308 of the Federal Water Pollution Control Act Amendments of 1972. Secrecy agreements, when required, were executed at this time for the protection of any company proprietary information which might be disclosed to the sampling contractor.

Prior to the actual sampling of waste streams, a lead visit to the selected plant was made to gather background information, confirm and update any 308 Questionaire responses, and to obtain additional technical information regarding processes and waste treatment practices. Sampling sites were selected and described

in relation to a detailed waste source inventory and a flow diagram of the process and waste treatment system. Arrangements were made for the subsequent sampling visit and the details of the lead visit and sampling point descriptions were documented in an interim report to the Agency.

5.1.2 Screening and Verification Sampling

Collection of Samples for Screening

In the screening phase of the sampling program, the specific objective was the detection and quantification of water-borne waste constituents included on the list of 129 priority pollutants (Table 3-2). Each sample of an individual raw waste stream, a combined waste stream, or a treated effluent was collected where possible by an automatic, time series, compositor over a single 72-hour sampling period. Where automatic compositing was not possible, grab samples were taken at intervals during the same sampling period and composited manually.

Each sample was divided into several portions and preserved, as required for different types of analysis, in accordance with the procedure established by EPA (4) for the measurement of priority pollutants.

Samples were also taken from the composites, or as individual grabs, for the analysis of the classical (BPT) pollutants.

Collection of Samples for Verification

The objective of verification sampling was to confirm the presence and further quantify the concentrations and waste loadings of the priority pollutants found at significant levels during the screening phase of the program.

The established protocol for verification sampling required the collection of three 24-hour composites at each sampling point. Again, where composites could not be taken with automatic samplers, grab samples were taken periodically over the same time period and composited manually.

Sample Shipping

All samples, individually labeled, were placed in large plastic bags, which were then placed in a waterproof insulated

shipping container. Enough ice was included to maintain a temperature of approximately 4 degrees C. during shipment to the laboratory.

Containers were shipped by the best available route, usually air freight, arriving at the laboratory on the same or the next day.

In order to maintain the chain of custody and to keep track of samples, sampling personnel kept logs of samples taken in ink in page numbered hard-bound books. The data recorded included: date, time, plant code, number, sample type, and sampler. This information was also included on the label of individual samples. Prior to their arrival at the laboratory, a list of samples shipped, including number, type of samples, and analysis to be performed, was sent to each department supervisor to alert them of incoming work.

A master analytical control chart was maintained which included: date sample was received, date due, number and type of each sample, and the analysis required.

At time of analysis, the individual samples were distributed to the analytical chemists along with a list which included: I.D. number of sample, type of sample, analysis required, date samples received, due dates.

Upon completion of analysis, the sample was sent back to the refrigerator and placed in identified bins. All samples were kept in the refrigerator at 4 degrees C. when not being analyzed. A list of completed samples was then sent to the EPA Sample Control Center.

5.1.3 Analytical Methodology for Priority Pollutants

The analytical protocol for the screening and verification of priority pollutants was established by the EPA in April 1977.

The specified analytical methodologies were employed without modification except where noted below in connection with priority metals analysis during verification.

Implementation of the methodology and quality assurance provisions required the establishment of special sample handling and control procedures specifically suited to each type of analysis. These procedures, together with a discussion of the achievable detection limits for each parameter or group of similar parameters are presented in the following paragraphs.

Trace Metal Analysis

Figure 5-1 shows a data flow diagram for metals analysis. A set procedure was followed in the laboratory to generate the analytical values and the quality control data. The data flow diagram shows the actual sequence employed in verification analysis and the following notes, which are keyed to the diagram, provide additional information on the procedures:

(1) Blanks - two for each set of analyses digested.
Duplicates - one every seventh sample.

(2) Quality Control at AA Operator Level:

Blanks - These were run at the beginning and the end of every set analyzed for each metal. Also, air blanks were run on furnace, or heated graphite atomizer, (HGA), after any sample with a large positive value.

Standards - Three different concentrations were run at the beginning and end of every set analyzed for each metal. Standards were also run every tenth sample during the analysis of a set.

Spikes - These were run every seventh sample, and were made by taking a mixture of equal parts of a sample and standard and comparing the resulting absorbance with individual sample and standard absorbances.

Duplicates - For furnace analysis, the sample was run twice when the absorbance was low to identify errors.
The average of the two values was used as the determinate value.

(3) UTD = Unable To Determine due to matrix interferences.

(4) Criteria Employed in Spike Selection:

(a) Samples were chosen to be spiked based upon the following criteria:
- those which were not subject to interference effects.
- those that had a measurable concentration of the metal being determined.
- those whose concentration was in the linear range of the instrument.
- approximately every seventh sample.

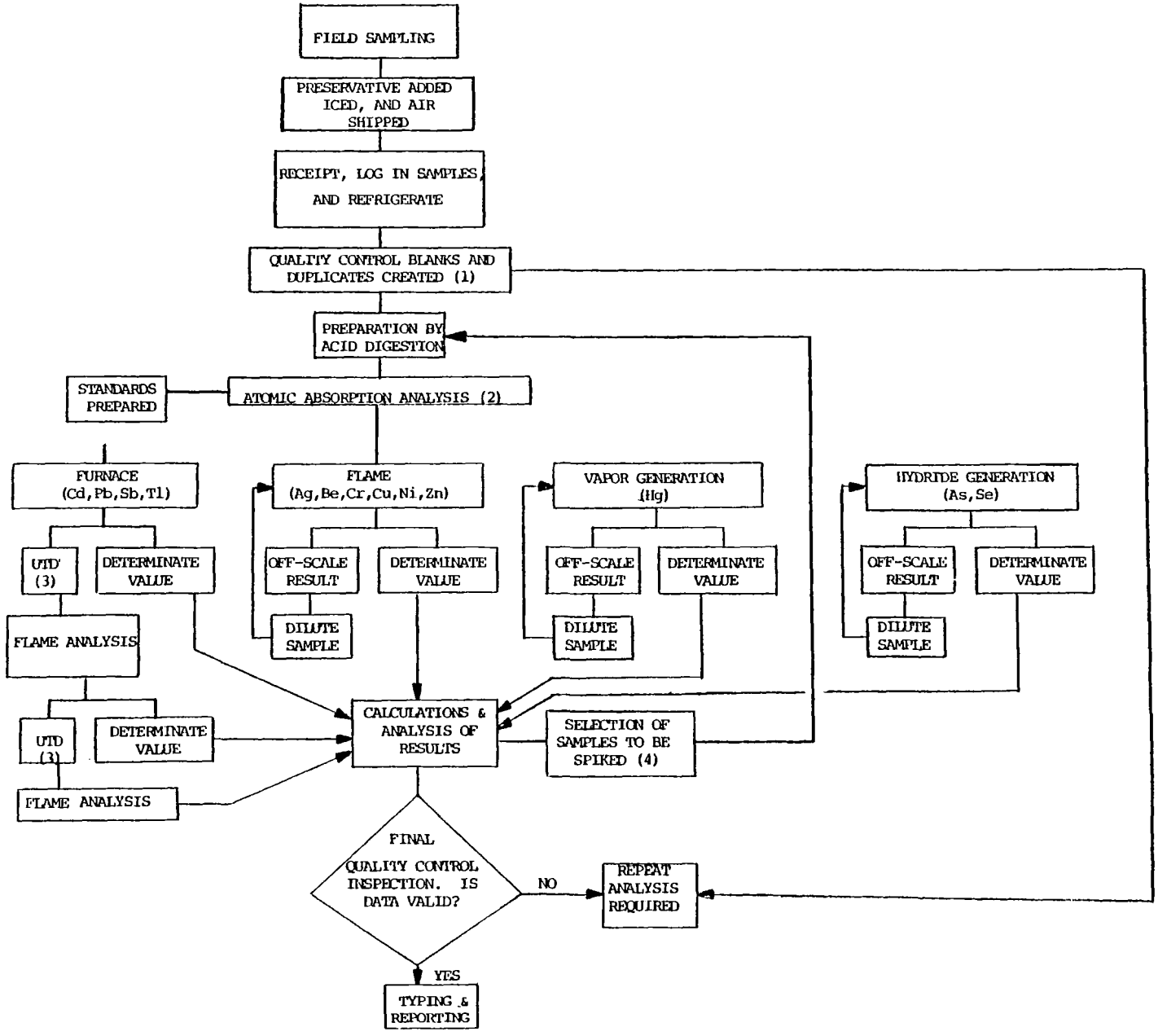

Figure 5-1 . Sample flow sheet for metals.

(b) The level of spike chosen was controlled by the following factors:
- it should be approximately 40-60 percent of the determinate value.
- the determinate value absorbance + spike absorbance must give total absorbance that was within the linear range.

(c) A reagent blank was run with each set of spiked samples prepared.

During the screening phase of the sampling program, the standard protocol followed for metals analysis was:

1. Twelve elements were determined by AA spectrophotometry in the furnace (HGA) mode.

2. If subject to matrix interference (UTD), they were then determined in the flame mode.

3. Mercury was determined by the standard cold vapor method.

Certain changes in analytical protocol were instituted during verification analysis in order to avoid the excessive matrix interference experienced during screening when the heated graphite atomizer (HGA) was the primary method applied to the analysis of 12 of the metals. The modified protocol for metals was:

1. Six elements were determined by flame only, namely, Ag, Be, Cu, Cr, Ni and Zn.
2. Four elements were determined by furnace (HGA), namely, CD, Pb, Tl and Sb. If interference occurred, Cd, Pb, Tl and Sb were determined by flame.
3. Hg was still analyzed by the cold vapor method.

This modification reduced the number of preparations per sample from three to two and achieved adequate detection limits which were still well below the verification criteria levels.

Additional modifications were made during the verification program to improve the reproducibility and detection limits for Hg, As and Se. These were:

1. The cold vapor procedure for Hg was modified to eliminate the pump and allow dilution and rerun from the same sample. This saved time and increased

reproducibility.

2. Selenium and arsenic were determined by hydride generation using sodium borohydride ($NaBH_4$). This greatly minimized problems associated with matrix interference. The method is very reproducible and the detection limits were at levels well below the verification criteria for these two elements.

After the above modifications were adopted, screening samples which originally were unable to be analyzed, or which were recorded at excessively high "less than" values due to the effects of matrix interferences on the achievable detection limits, were rerun. Satisfactory results were then obtained in nearly all cases due to the greatly improved sensitivity and reproducibility.

Table 5-1 presents a summary of the analytical detection limits for each of the 13 priority metals using the original protocol and the two subsequent modifications which were applied.

The detection limits shown reflect the maximum sensitivity that can be consistently obtained in the absence of matrix interferences.

Organic Compound Analysis

The organic priority pollutants were determined by the standard protocol which includes sample preparation, extraction, and analytical methodologies. Extractions were carried out using methylene chloride in the case of the acid and base/neutral organic fractions and with hexane/methylene chloride to obtain the pesticide containing fractions. The acid and base/neutral fractions were reduced in volume and analyzed by gas chromatography-mass spectrometry (GC/MS). The pesticides were analyzed by electron capture gas chromatography followed by GC/MS confirmation of positive results. Volatile organics were analyzed by the purge and trap method of introducing the material into the GC/MS inlet system.

Analysis of Cyanide and Chromium VI

The standard methods for the wet chemical analysis of total cyanide and cyanide amenable to chlorination were utilized. Cyanide analysis is subject to several sources of interference including:

TABLE 5-1 - ANALYTICAL DETECTION LIMITS FOR METALS (assuming no matrix interferences requiring dilution of sample)

Element	Original Screening Protocol (µg/l)		First Modification of Protocol (µg/l)		Second Modification of Protocol (µg/l)	
Antimony, Sb	HGA *	10	HGA	10	HGA	10
Arsenic, As	HGA	3	HGA	3	Hydride	10
Beryllium, Be	HGA	0.2	Flame	15	Flame	15
Cadmium, Cd	HGA	1	HGA	1	HGA	1
Chromium, Cr	HGA	1	Flame	25	Flame	25
Copper, Cu	HGA	1	Flame	20	Flame	20
Lead, Pb	HGA	10	HGA	10	HGA	10
Mercury, Hg	Cold Vapor	0.5	Cold Vapor	0.5	New Cold Vapor	0.5
Nickel, Ni	HGA	1	Flame	25	Flame	25
Selenium, Se	HGA	9	HGA	9	Hydride	10
Silver, Ag	HGA	0.5	Flame	15	Flame	15
Thallium, Tl	HGA	2	HGA	2	HGA	2
Zinc, Zn	HGA	1	Flame	25	Flame	1

*Heated Graphite Atomizer

Metals - The presence of Fe, Cd, Ca, Ni, Ag, and Zn may cause low results due to the formation of stable complexes with cyanide. The iron complexes may form insoluble precipitates which are particularly difficult to break up both at the time of alkaline chlorination of the sampled waste water and during the chemical analysis for cyanide.

Oxidizing agents - The presence of free chlorine in the waste water sample will destroy cyanide and cause low analytical results. The addition of ascorbic acid to destroy chlorine at the time of sampling is intended to mitigate this problem. Other oxidizing agents such as peroxides and chromates may also react with cyanides over a period of time and cause low results.

Sulfides - Sulfide or bisulfide will interfere in the analysis of cyanide by reacting with the colorometric reagents.

The presence of sulfur dioxide or bisulfite in the waste water sample should have no appreciable effect on cyanide results. Detection limits on the order of 1-4 ug/l can be achieved by the analytical method employed, but the results have to be interpreted with regard to the possible interfering components of the sample.

The determination of chromium VI in waste water samples is also subject to a number of interferences which can take effect either during sampling and storage or during analysis.

Acids - Samples taken and held at a very low pH can experience the conversion of other forms of chromium into Cr VI causing a positive interference.

Reducing agents - Samples containing sulfur dioxide, bisulfite, bisulfide, sulfide, ferrous iron, and other reducing agents will result in low values of Cr VI by converting it to Cr III. Under these conditions the chromates originally present would be included in the total chromium determination but the analytical results for hexavalent chromium would be proportionately low.

The detection limits for Cr VI using the diphenylcarbazide colorometric method are on the order of 1-3 ug/l in the absence of substances which interfere with color development.

Asbestos Fiber Analysis

The analysis of selected samples for asbestos fiber (chrysotile) was conducted by the recommended method utilizing transmission election microscopy with selected

area electron diffraction as described by Dr. Charles Anderson (EPA, Athens, Georgia) at the Analytical Protocol Meeting in Denver (November, 1977).

Conventional and Nonconventional Pollutants

All techniques used for the analysis of BPT control parameters (conventional and nonconventional pollutants) were those recommended by the Agency. The list of approved test procedures was published in the Federal Register on October 16, 1973 (38 FR 28758) and may be also found in Title 40 of the Code of Federal Regulations (40 CFR 136).

5.1.4 Quality Assurance Provisions

The Agency and the contractor's analytical laboratories maintain consistently high standards for accuracy and quality control. As an in-house requirement, a minimum of ten percent of all samples are routinely run in duplicate. Quantitation is based on standards that are prepared in the same matrix as the samples. The standards are also checked by participation in the EPA Reference Sample Program that utilizes a double blind technique.

Additionally, outside laboratories are retained for checks on quality by analyzing split samples and running submitted standards. Accuracy is also insured by analysis of a minimum of fifteen percent of all samples with spikes by the method of standard additions. The spikes are added prior to sample preparation and are carried through the entire sample analysis procedure.

The contractor's laboratories have consistently maintained the standards for laboratory certification which are imposed by the State of California. Certification is dependent upon the accurate performance of routine analyses on check samples submitted by the State, as well as on-site inspections by the State of California's Sanitation and Radiation Laboratory, Department of Fish and Game, and the U. S. Environmental Protection Agency, NEIC, Denver, Colorado.

The quality assurance provisions outlined in the EPA Protocol for GC/MS Analysis of Priority Pollutants are rigorously adhered to with one added precaution, namely, the use of internal standards as a means of measuring recovery. Although not required by the protocol for pesticide analysis, this technique is utilized as an in-house quality control requirement to insure the accuracy of results in this analysis.

The high sensitivity of instrumentation used in trace organic chemical analysis dictates that contamination of the

samples from any possible source must be diligently guarded against. Accordingly, only glass sample containers with Teflon-lined lids were used and these were subjected to a three-step cleaning procedure prior to use, even though only new liners and glass containers were used. All glassware used for sample preparation and analysis was subjected to a dual cleaning system.

The sample extraction and preparation rooms were dedicated solely to priority pollutant analysis, and have their own ventilation systems that are isolated from the other sample preparation and receipt areas of the laboratories.

A documented system of existing practices, including calibrations and operational checks is maintained to assure uniformity of performance and to serve as a basis for alteration of standardization intervals. A chemist is assigned full time to maintain this system, assure strict record formating and controls, and to direct the quality control program of the laboratories. The primary vehicle of this system is the quality assurance manual containing the detailed procedures used in sample preparation and analysis, and the complete records of all quality control standards, blanks, spikes and duplicates.

5.2 THE BASIS FOR VERIFICATION SAMPLING

The screening program results were evaluated to identify those priority pollutants that were present at significant concentration or significant daily loadings. Concentrations or loadings which could be reduced by the highest quality treatment systems were considered significant.

1. A subcategory which had a significant raw waste concentration of any priority pollutant(s) would be subject to verification sampling, and BAT-based regulations would likely be proposed by the Agency for the treatment and control of that priority pollutant.

2. A subcategory which had no significant raw waste concentration of any priority pollutant would not be subject to verification sampling and would likely be excluded from regulatory coverage at this time in accordance with the provisions for exclusion under Paragraph 8 of the Settlement Agreement.

In analyzing screening data, only those pollutants attributable to process sources were considered. Pollutants which result from cooling tower operations, corrosion or corrosion control, control of biological growth, or any other operation not directly tied to the production process were not used as a basis for verification.

5.3 THE VERIFICATION PROGRAM

After the decision was made to verify the presence of priority pollutants found in the screening of a subcategory, verification plants were selected. The basis for selection was essentially the same as that used in selecting screening plants.

In some subcategories, plants which had been screened were also sampled again in verification.

The number of plants selected for verification in each subcategory was roughly proportional to the number of existing plants in that subcategory with a maximum of five plants selected. In small subcategories (relatively few production facilities), an effort was made to select a sufficient number of plants to account for the majority of the total U.S. Production. Very small producers were not selected.

The sampling methods and analytical protocol used in verification have been described in Sections 5.1.2 and 5.1.3.

When the verification phase of the program was initiated, an important decision was made with regard to metals analysis. First, in view of the frequent presence of metal contamination in the wastes screened, and the inability in some cases to show a direct relationship between certain metals found and the known process chemicals or the materials of construction, it was decided that all 13 of the priority metals should be determined again during verification, regardless of whether they were found in screening. This was intended to provide a much more complete data base than would be obtained by running verification analyses for only those metals found in screening to exceed the verification criteria levels at the time of sampling.

SECTION 6

PROCESS AND WASTE TREATMENT INFORMATION DEVELOPMENT AND EVALUATION

6.1 INDUSTRY DATA BASE DESCRIPTION

6.1.1 Data Acquisition

Information and data on the inorganic chemicals industry were obtained from a number of sources. These sources included literature reviews, plant visits and data collection, telephone contacts, and industry responses to the Section 308 Questionnaires. The type of material gathered from these sources is briefly discussed below.

Literature Review

A review of the literature has been conducted to identify and collect information related to manufacturing processes, raw materials, water use and wastewater sources, wastewater treatment technology, raw waste characteristics, and economic data. Relevant articles in the form of reports, books, papers, conference presentations and periodicals were identified by computer search and are presented in the reference section of this report. This information was incorporated into a broad-based assessment of process and technology practices aimed at selecting the best available treatment technology and best demonstrated technology for the various industry subcategories. It also provided the background required for evaluating the subcategorization of the industries.

Plant Visits

During the screening and verification phase of this project, much information was gathered from individual plants relating to production capacity, manufacturing processes, waste flows, water reuse, waste water treatment systems and performance, and best management practices (BMP). The lead visits also provided an opportunity to update and clarify some of the information given in the 308 responses.

Telephone and Direct Contact

Numerous contacts were made with knowledgeable persons in both industry and government to gather and exchange information concerning all phases of this study. These sources are cited in the text as personal communications.

308 Questionnaire Responses

The basis for much of the work in this study is the set of responses from industrial inorganic chemical firms to the 308 data requests.

Data from 284 manufacturers' responses were utilized by the project team for the development of appropriate guidelines for the inorganic chemicals subcategory. Industrial firms, through their compliance with the needs of the 308 Questionnaire, provided a valuable industry-wide data base used extensively in this analysis.

Essential data elements from each questionnaire were extracted for the purpose of creating a working data base for this report. Specific elements selected for this smaller, more-manageable data base are given in the outline on the following page.

These data provided the basis for the subcategory review through a profile of each industry. After compilation of the questionnaire data, industry totals for capacity and production (for the respondents) were available. In addition, derivative quantities such as percent utilization, effluent per ton of product, conversion to metric units, were compiled from the data elements listed below:

308 Questionnaire Response Data
Data Elements used in this
Inorganic Chemicals Guidelines Study

Datum Reference	Description	Comments
Manufacturer	Name	Confidential
	Location	
	EPA Region	
Product	Name	
	Subcategory	Inorganic Chemicals
	Number of other Products	
Plant	Capacity	1976
	Production	1976
	Age	1976
Process	Name	
	Volume of Process Effluent	
	Volume of Noncontact Effluent	
Effluent Treatment	Type	
	Permit	
	Major Pollutants	

6.2 PROCESS WASTE SOURCES AND CURRENT TREATMENT PRACTICES

6.2.1 Data Acquisition

The information presented in this section was obtained from a variety of published sources and the available industry responses to the 308 Questionnaires as well as from plant visits and interviews with industry personnel conducted by the Agency and its contractor during the priority pollutant screening and verification program. The results of visits and interviews are documented in field notebooks, interim plant visit reports, and telephone communication records which are part of the permanent project file.

Plant visits were particularly useful for confirming and updating the detailed technical information contained in the 308 Questionnaire responses. The cooperative and helpful attitude on the part of industry greatly facilitated the acquisition of reliable operating data and meaningful sampling results.

6.2.2 Evaluation of Data

Each of the subcategories which were carried through the verification sampling program as the result of the priority pollutant levels found during screening, is the subject of an extensive review and evaluation intended to provide the technical basis for selecting candidate advanced treatment technologies and developing the related base and incremental cost estimations. In the subsections which follow, individual plant descriptions are presented in accordance with the general format for each subcategory:

General Process Description
- Description of process reactions and unit operations.
- Inventory of raw materials used.
- Typical process flow diagram.

Water Use and Waste Source Inventory
- Description of individual plants visited, sampled and plant information from other sources.
- Inventory of water uses for contact and noncontact purposes.
- Inventory of raw process waste water sources and identification of sampling points.
- Process waste water quality and flow data.
- Solid waste generation and disposal.

Control and Treatment Practices
- Description of specific treatment technologies and operating facilities.

Description of the total input to the treatment system including sources attributed to other production operations and noncontact water (e.g., cooling water, etc.).

Evaluation of Production and Waste Flow Data
- Tabular summary of plant-specific data.
- Waste flows per unit of production (unit waste flows) with the range and average values.
- Solid waste quantities.
- Treatment chemical requirements.

Process Modifications and Technology Transfer Options

Best Management Practices (BMP)
- Plant area operations and housekeeping.
- Runoff control.
- Solid waste handling (e.g., fugitive dust and leachate control, etc.).

6.2.3 Model Plant and BPT Treatment System Specification

The model plant concept plays a central role in both the development of alternative treatment system designs for priority pollutant removal and for estimating the related internal costs of such treatment in each subcategory. In order to be representative of a subcategory, each set of model plant specifications was composited from a profile data summary derived from the available information on production and waste flow.

Based on the typically achievable waste flow rate per unit of production, the model plant was used as a starting point for laying out an appropriately designed and sized BPT level waste water treatment system. Certain assumptions had to be made regarding the possible process variations and the specific raw waste sources incorporated into each model and in most cases it was found appropriate to assume that the waste flow per unit of production did not vary over the particular range of production capacities to be covered. Production rates were selected in most subcategories to represent the small, mid-range and large size plants presently in operation. Small subcategories were represented by single mid-range production rates for the model plants. Cost estimates were developed for each set of base level (BPT) and advanced level (BAT/NSPS) treatment system design specifications.

In Sections 11-25, the model plant and BPT level treatment system descriptions and specifications for each subcategory include the following information:

Production rates and mode of operation.
Specific process type and waste sources.
Waste flow per unit of production.
Solid waste generation and handling.
Treatment chemical requirements.

If applicable, the new source model plant is also described and the design specifications given for its waste treatment system.

6.2.4 Dissolved Solids in Waste Water Effluents

Many waste treatment plants discharge final effluent into watercourses which feed fresh water streams used as sources of water supply by downstream agencies or industries. Groundwater aquifers which underlie large portions of the country are tapped to supply fresh water through wells serving public and industrial water needs. In both cases saline wastes discharged into streams or into unlined lagoons can significantly alter the salt content (total dissolved solids) of the fresh water. Although Federal regulations seldom limit the total dissolved solids or the various ions such as chloride, sulfate, bicarbonate, and nitrate, these constituents can be of serious concern to local water users.

To protect the mineral quality of ground and surface waters State and local water pollution control agencies typically establish limits on the discharge of substances which contribute sodium, potassium, hardness, chloride, sulfate, and conductivity, which is a measure of total solids in solution. This restriction can play an important part in choosing chemicals for waste treatment. For example, alkaline precipitation can be accomplished by using lime, which forms an insoluble calcium sludge, or by adding caustic soda, forming a soluble sodium salt.

In choosing an acid for neutralization of alkaline wastes, it is important to weigh the overall effects of chloride (from hydrochloric acid) and sulfate (from sulfuric acid), particularly with respect to irrigational use of the receiving water.

Chemicals used in the model plant processes were selected on the basis of best performance, including consideration of scaling problems, which can be severe when calcium and sulfate are at saturation levels. It may be necessary to alter the nature of chemicals used at a specific plant, in order to meet local water quality requirements.

SECTION 7

TREATMENT AND CONTROL ALTERNATIVES FOR ADVANCED LEVEL APPLICATIONS

7.1 TREATMENT TECHNOLOGY ASSESSMENT

7.1.1 Introduction

In the inorganic chemicals industry, pollution abatement practices vary and a wide range of treatment technologies can be found, ranging from no treatment to the application of highly advanced techonolgies for the removal of specific pollutants.

Until the NRDC Consent Decree, industry attention was primarily directed towards general pollution problems including removal of trace metals, but not towards treatment of over 100 individual specific organic compounds now listed as priority pollutants. Even with the classical (conventional and nonconventional) pollutants, treatment technology has been directed to removal down to the part per million level, whereas now the thrust is towards part per billion level requirements. For both these reasons, suitable BAT technologies are not in place in the inorganic chemicals industry, and it is necessary to look into technologies that have been applied in other industries or developed at the laboratory or pilot plant scale specifically for the removal of these toxic substances from industrial waste water, and determine whether they can be adopted as viable technological options.

A list of candidate technologies was compiled from the literature, in-house expertise, and industry contacts. These were evaluated with respect to:

1. Treatment effectiveness
2. Cost
3. Nonwater pollution environmental effects
4. Applications in the inorganic chemicals industry or on other industrial wastes with similar waste water characteristics.

The anticipation that few of the organic priority pollutants would be found in inorganic chemical wastes was justified by the results of the analytical programs. Only one industrial subcategory, namely, Chlor-Alkali production using graphite anodes had potentially significant levels of organic priority pollutants. As a result, the initial search for candidate BAT technologies became limited to treatment technologies for the thirteen metals, cyanide, and asbestos.

The technologies finally adopted were not new or untried technologies since it was found that most treatment requirements could be met by taking conventional techniques--for example, chemical precipitation--and developing them to a higher degree of engineering and design sophistication, so that optimum removal efficiencies could be achieved.

The following pages describe the theoretical basis for treatment systems adopted for BAT application.

7.1.2 Hydroxide Precipitation

Hydroxide precipitation is the most widely used technology for removing trace metals from waste waters, with lime or caustic soda commonly used to supply the hydroxide ions. Under suitable conditions the metals form insoluble metal hydroxides which can be separated from solution.

The chemistry of the process is not simple, and must be understood for each metal. Many metals are amphoteric, the optimum pH for precipitation varies, and organic complexes can interfere. The simple reaction may be written as:

$$M^{++} + Ca(OH)_2 = M(OH)_2 + Ca^{++} \qquad (1)$$

If the pH is below the optimum for hydroxide precipitation soluble complexes form:

$$M^{++} + OH^- = M(OH)^+ \qquad (2)$$

Since most metals have the capability of coordinating with other ions or molecules, these simple equations assume that the hydroxonium ion is the coordinated species. However, if organic radicals are present, they can form chelates and mask the typical precipitation reactions:

$$M^{++} + OH^- + nR = M + (R)nOH^+ \qquad (3)$$

Such complexes may require unusual treatment to hydrolyze them, and their presence often explains why some treatment practices yield relatively poor results.

Assuming the absence of organic complexing agents, the treatment levels attainable by hydroxide precipitation can be forecast from a knowledge of the pH of the system. Figure 7-1 shows the theoretical solubility of those metals which form insoluble hydroxides, while Table 7-1 shows the solubility product constants. For comparison, the values for sulfides are also given.

It is clear from the range of optimum pH's illustrated that for waste waters containing more than one metal, no single optimum pH exists, and problems arise at the threshold of the alkaline range (circa pH 10) where some metals have least solubility, while others are at the point of redissolving as an anionic species. For successful application as a waste water treatment technology, careful control of pH must be practiced if the best removals are to be achieved.

In practice these problems, the solubility of metallic hydroxides, and the tendency for fine insolubles to remain in suspension, tend to yield effluents which will not meet ug/l standards, and so hydroxide precipitation is often supplemented by the use of coagulating agents to improve solids removal, or sulfide co-precipitation to reduce ultimate solubilities.

In practice the technology uses unit process steps which are simple, well established, and well understood by the industry.

Depending on the quantity of waste flow, the treatment can either be a batch or continuous operation, with batch treatment being favored when waste flows are small. In batch treatment the equipment usually consists of two tanks, each with a capacity to treat the total waste water volume expected during the treatment period. These systems can be economically designed for flows up to 50,000 gallons per day (5).

The treatment tanks serve the multiple functions of equalizing the flow, acting as a reactor and as a settler. During operation the waste water is stirred, and a homogeneous sample is taken and analyzed to determine the chemical dosage requirements. The chemicals are then added, mixed and stirred for about 10 minutes. After the reaction has completed, the solids are allowed to settle for a few hours. The clear liquid is then decanted and discharged. Settled sludge is retained to serve as a seed for crystal growth for the next batch, but must be periodically drawn off and disposed of, usually in a chemical landfill.

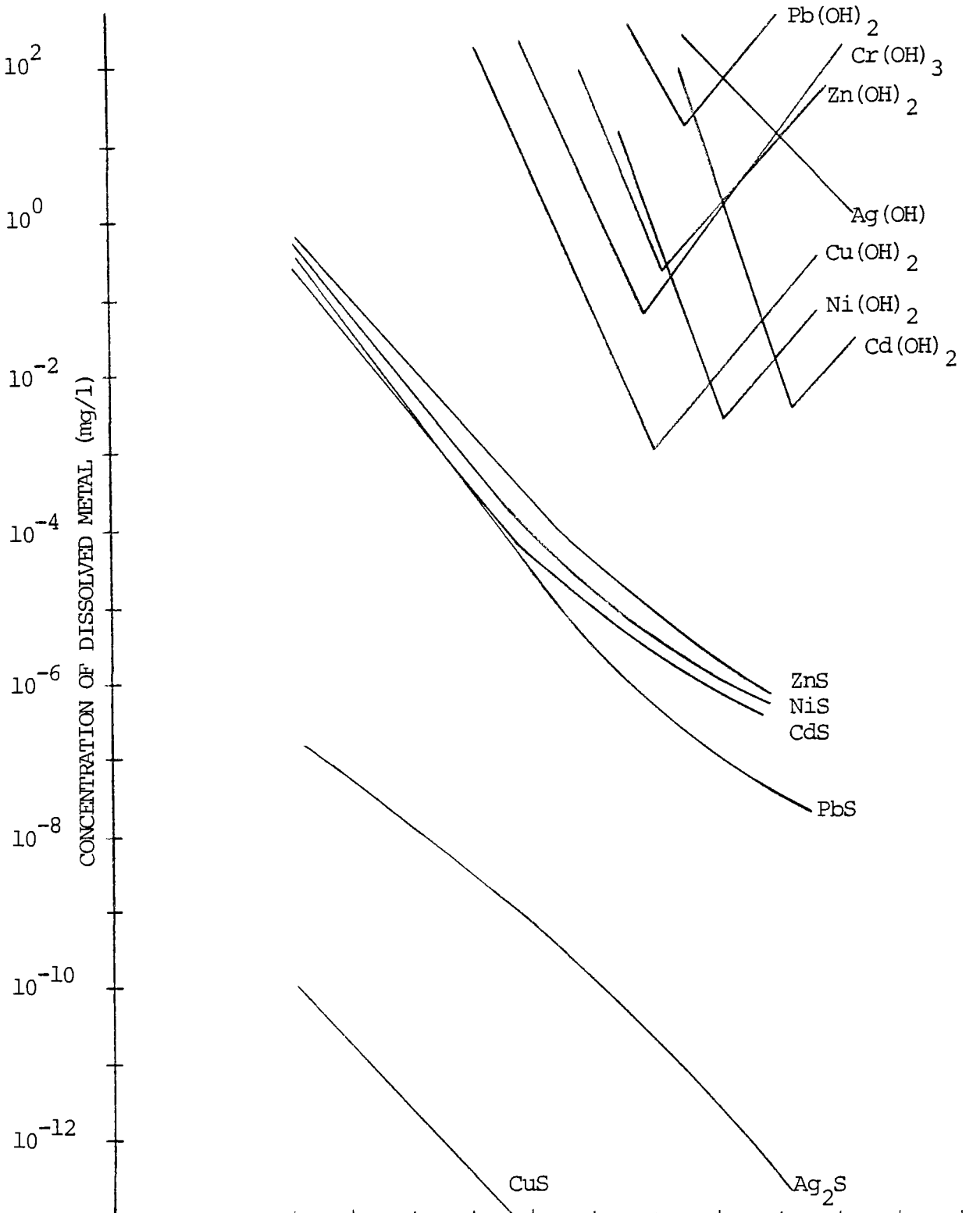

Figure 7-1. Solubility of metal hydroxides and sulfides.

TABLE 7-1 - SOLUBILITY PRODUCTS OF TRACE METALS

Metal	Solubility Product Constant (log K_{sp}) Hydroxide	Sulfide	Ethyl Xanthate
Cadmium, Cd	13.6	26.1	13.6
Copper, Cu	18.6	35.2	-
Ferrous, Fe^{+2}	15.3	16.9	7.1
Lead, Pb	16.1	26.6	16.9
Mercury, Hg	25.4	52.2	37.8
Nickel, Ni	14.8	25.7	11.9
Zinc, Zn	15.7	25.2	8.3
Chromium (IV), Cr^{+6}	8.9	-	-

A typical continuous flow treatment scheme consists of a flash mixer, flocculator, settling unit with sludge storage tank, and in some cases a filtration system.

The ability to separate the solids from the waste water is important. Metallic hydroxides tend to be gelatinous and separate poorly in gravity separators. Finely suspended solids tend to pass out with the effluent and increase the total metal content. Thus, improvements in precipitation applications have been concentrated on fine solids removal, and this is reflected in the addition of various filtration systems and the use of flocculant aids as improved levels of treatment.

Lime is more commonly used than caustic soda as the hydroxide source because it is cheaper. However, if there is sulfate ion present in the waste water, gypsum will be formed:

$$Ca(OH)2 + (SO4)-- = CaSO4 + 2OH- \qquad (4)$$

This increases the sludge produced, may cause scaling problems in pipelines, and may clog a dual media filter. Using caustic soda is more expensive, but it generally eliminates the scaling problem. Total dissolved solids in the form of sodium salts are increased in the caustic treated waste waters. Although low concentrations of sodium are not regarded as polluting, high levels can make drinking water unpalatable, limit the use of water for agriculture, and promote degradation of the structure of arable soils. Thus, where high total dissolved solids are of concern, lime would be the preferred neutralizing agent.

This treatment technology is widely applied in treating industrial waste waters. Industries that are using hydroxide precipitation include:

Inorganic Chemicals
Plating and Metal Finishing
Mining
Textiles
Steel and Iron
Non Ferrous Metal Processing and Electronics

Better than 99 percent removal of trace metals have been reported in the literature with final concentrations in the treated effluents ranging from sub ppm to low ppm (see Tables 8-1 through 8-10).

7.1.3 Ferrite Coprecipitation

An interesting variation on the theme of hydroxide precipitation is a process developed in Japan for the removal of heavy metals from acidic waste water. The process, known as ferrite coprecipitation, has the potential for producing a marketable residual by converting the metal ions in solution into insoluble ferromagnetic oxides or ferrites which can be removed magnetically or by filtration (5). The treatment is applied by adding a ferrous salt to the metal-bearing waste water, then neutralizing and oxidizing the complex heavy metal-ferrous hydroxide precipitate by aeration to form the stable ferrite coprecipitate. Particle sizes are reported to be relatively large and sludges formed can be safely disposed of by landfilling.

Although extensive performance data have not been developed, the information available indicates that very high removal efficiencies can be achieved for most of the common heavy metals, including mercury and hexavalent chromium. The method has not been considered here as an available technology due to the lack of sufficient information on chemical dosing requirements, energy requirements, and performance in situations similar to those found in the inorganic chemicals industry. It will be noted later, in connection with the discussion of waste water treatment in the Titanium Dioxide Subcategory for the sulfate process, that the wastes contain considerable amounts of ferrous iron from the processing of ilmenite ore and the current practice of neutralization and aeration may well involve the same chemistry as the ferrite coprecipitation process.

7.1.4 Sulfide Precipitation

The basic principle of sulfide treatment technology is similar to that of hydroxide precipitation. Sulfide is added to precipitate the metals as metal sulfides and the sludge formed is separated from solution by gravity settling or filtration. Sodium sulfide and sodium bisulfide are the two chemicals commonly used, with the choice between these two precipitation agents being strictly an economic consideration.

Metal sulfides form according to the following equation:

$$M^{++} + Na_2S = MS + 2Na^{+} \qquad (5)$$

Figure 7-1 shows the theoretical solubility product constant of the metals that form insoluble sulfides.

The major problem in applying sulfide precipitation techniques is associated with the toxicity of sulfides. This warrants both care in application and post treatment systems to

remove excess sulfide. Pretreatment involves raising the pH of the waste stream to minimize evolution of hydrogen sulfide gas.

A recently developed and patented process to eliminate the potential hazard of excess sulfide in the effluent and the formation of gaseous hydrogen sulfide uses ferrous sulfide as the sulfide source (6). The fresh ferrous sulfide is prepared by adding sodium sulfide to ferrous sulfate. The ferrous sulfide slurry formed is added to a waste water to supply sufficient sulfide ions to precipitate metal sulfides which have lower solubilities than FeS. Typical reactions are:

$$FeS + Cu^{++} = CuS + Fe^{++} \qquad (6)$$

$$FeS + Ni(OH)_2 = Fe(OH)_2 + NiS \qquad (7)$$

A detention time of 10-15 minutes is sufficient to allow the reaction to go to completion (7). Ferrous sulfide itself is also a relatively insoluble compound. Thus the sulfide ion concentration is limited by its solubility, which amounts to about 0.02 ppb, and the inherent problems associated with conventional sulfide precipitation are minimized (8).

One other advantage of this process is that if chromium (VI) is present, it will also be reduced at a normal operation pH of 8-9 and precipitate as the trivalent hydroxide.

Treatment systems for sulfide precipitation are similar to those used for hydroxide precipitation. A continuous treatment scheme generally consists of a pH adjustment tank, flash mixer, flocculator, settling units with sludge storage, and a dual media filter.

Before the addition of sodium sulfide or bisulfide the pH of the incoming wasteflow is adjusted to pH of 7-8 in the first reaction tank to prevent the formation of obnoxious hydrogen sulfide gas. The chemicals are then added to the flash mixer where they are thoroughly mixed with the waste water.

After the flash mix, the waste water passes through a flocculating basin where the floc agglomerates and settles in the settling unit. The overflow from the settling unit generally passes through a filter to remove any fine precipitates. Any excess sulfide will need to be removed before final discharge. This can be achieved either by aeration or other chemical oxidation techniques.

Sulfide precipitation is being practiced in the inorganic chemicals industry, mining industry, textile industry, and nonferrous metal processing industry. Most of the Chlor-Alkali industry is applying this technology to remove lead or mercury from its waste streams.

Literature citations on the efficiency of sulfide precipitationn (9, 10, 11) indicate that most results are in the sub ppm range, and that sulfide treatment is superior to hydroxide treatment for the removal of several trace metals. A recent report concluded that, with no complexing agents in the waste, the following effluent quality can be achieved (11).

Metals	Concentration
Cadmium	0.01 mg/l
Copper	0.01 "
Zinc	0.01 "
Nickel	0.05 "
Chrome total	0.05 "

Adding ferrous sulfide as a polishing step to remove residual metals appears to be a promising, economical technology. Although there is no full-scale treatment system operating in the inorganic chemicals industry, pilot studies on chrome pigment waste indicate that this process is superior to sulfur dioxide reduction followed by hydroxide precipitation (12).

7.1.5 The Xanthate Process

The use of xanthates for the removal of metals from waste streams appears to be a new, promising technology for treating metal-bearing waste waters. Xanthates contain functional groups capable of forming insoluble complexes with metals, and the sludge so formed can be separated by conventional means.

Xanthates can be generated by mixing starch or cellulose with carbon disulfide in a caustic medium. Three types of xanthates have been proven in bench pilot scale studies to be effective in removing cadmium, chromium (III), copper, iron, lead, mercury, nickel, silver and zinc from industrial waste waters (13-20). These are:

Soluble starch xanthate with a cationic polymer,

Insoluble starch xanthate, and

Fibrous cellulose xanthate

The general removal mechanism is as follows:

$$2[ROCS(=S)Na] + M^{++} = [ROCS(=S)_2M] + 2Na^{+} \quad (8)$$

where R = starch or cellulose

Unlike hydroxide precipitation, this process is reported to be effective in removing metals over a wide pH range of 3 to 11, with an optimum range between 7 and 9.

Brass mill waste waters, lead battery effluent, circuit board rinse waters, electroless copper plating rinse waters, pyrophosphate electroplating rinse waters, and copper etching rinse waters were studied in a pilot plant with insoluble starch xanthate as the complexing agent (20). This pilot study demonstrated that the xanthates can either be added to a reactor to mix with the waste waters or be applied as a precoat on a pressure filter (20). Results of these pilot studies showed that metals were reduced to below 50 ug/l (ppb).

Another study indicated cellulose xanthate is as effective as starch xanthate in removing trace metals. The following table summarizes the result of the study with a cellulose xanthate dosage of 90 mg/l and a contact time of 30 minutes (18-19):

	Concentration, mg/l	
Metals	Influent	Effluent
Cadmium	1.35	0.027
Chromium	0.30	0.022
Copper	1.6	0.06-0.14
Iron	3.1	0.08-0.36
Lead	3.9	0.008-0.021
Nickel	2.4	0.077
Zinc	1.0	0.03-0.04

This study also concluded that cellulose xanthate is superior to starch xanthate in terms of sludge settling characteristics, filterability, and handling.

Xanthate may also be used as a complexing agent to prevent the formation of soluble anions from insoluble amphoteric metal hydroxides.

The xanthate process is a new technology, and the reagent compounds are not available in commercial quantities. More information is needed on how to feed the xanthate in continuous flow operations. Potentially the metals can be recovered by leaching the xanthate complex with nitric acid, but metal recovery has not been demonstrated yet. Sludge disposal problems may arise if the sludge complex is unstable and, if xanthates are to be generated on site, care will be needed in handling the hazardous carbon bisulfide.

7.1.6 Ion Exchange

Ion exchange is a chemical reaction between the ions in solution and the ionic sites on an exchange resin. Many natural solids (e.g., soils, proteins, and zeolites) exhibit such exchange characteristics. However, synthetic resins are the predominant ones used for ion exchange applications in modern industrial technology. These resins contain functional groups that can react with the ions in solution. Depending on these functional groups, the resins can be classified into:

Strongly acidic cation exchanger,
Weakly acidic cation exchanger,
Strongly basic anionic exchanger, and
Weakly basic anionic exchanger.

Cation exchangers are capable of exchanging with cations in solution. Strongly acidic cation exchangers contain functional groups such as sulfonates, (-S03H and -S03Na), while weakly acidic exchangers have functional groups derived from carboxylic acids, (-C00H and -C00Na).

Anionic exchangers are used to exchange with the anions in solution. In general, strongly basic exchangers contain amine functional groups (-R3N0H and -R3NCl), and weakly basic exchangers contain ammonia functional groups (-NH30H and -NH3Cl).

When the functional groups are used up in the reaction, the resins can usually be regenerated. Cationic resins can be regenerated by sodium chloride, hydrochloric acid, sulfuric acid or sodium hydroxide. Anionic resins are regenerated by sodium hydroxide, ammonium hydroxide, sodium carbonate, sodium chloride, or hydrochloric acid.

The exchanger can either be added to the waste waters in batch operations or be packed in a fixed bed or column. Fixed bed is by far the more effective and hence more popular. The operation generally follows a four-step cycle: exchange (service), backwash, regeneration, and rinse.

During the exchange step, the reaction between the ions in solution and the ionic sites in the resin takes place as the waste water passes down the bed. The reaction is generally regarded as a result of electrostatic attraction (20). Therefore, the size of the hydrated ion and the charge on the ion are the determining factors for the exchange reaction. A trivalent ion is attracted more strongly than a divalent ion which is in turn attracted more strongly than a monovalent ion. For ions with the same charge, the smaller hydrated ion is capable of moving closer to the exchange site, and is thus favored.

Many synthetic resins contain functional groups that are selective to certain metals. For example, a resin manufactured by a European company reacts preferentially with HgCl+ ions according to the following equation:

$$2RSH + Hg^{++} = RSHgSR + 2H^{+} \quad (9)$$
$$RSH + HgCl^{+} = RSHgCl + H^{+} \quad (10)$$

The exchange reaction is governed by the law of mass action. During the reaction, the affinity of the resin for the two ions is so great that essentially all the mercury chloride complex formation equalibria are shifted toward the formation of Hg++ and HgCl+ which are rapidly removed. A 5 ppb residual mercury concentration in the effluent is achieved by this process (22).

After all the exchangeable sites in the resin are used up, the bed is backwashed by passing clean water through to loosen up the bed and to remove any fine particulates that are trapped inside the bed.

After the backwash cycle the resins can be regenerated with the appropriate regenerant.

$$RSHgCl + HCl = RSH + HGCl2 \quad (11)$$

One attractive feature of the ion exchange process is that it concentrates the metals in the regeneration step, and thus provides a potential for their recovery. However, if recovery is not feasible, this creates a secondary stream which needs to be treated.

A recent study found that sodium alumino silicates (zeolites) might be a low-cost exchanger that can be discarded after a one-time use (22). This would eliminate the regeneration step. On a batch study with a five-minute contact time, cadmium and mercury were removed to below 10 ppb. Thermodynamic considerations show this exchanger to have a high affinity for cadmium, copper, mercury, nickel, silver, zinc, cesium, and barium.

Ion exchange is a proven technology that can reduce metals down to low concentration levels. However this technology is used only in limited industrial pollution abatement applications because of the high cost associated with the process. Consequently, ion exchange has not been recommended in this report for BAT technology.

7.1.7 Reduction Processes

Many metals can exist in solution in several oxidation states, and it may be necessary to convert from a higher valency state to a lower one in order to apply a given chemical reaction.The classic example is chromium, which as the trivalent chromic ion will precipitate as the hydroxide in alkaline solution, while the hexavalent chromate or dichromate ion will not. The latter needs to be reduced if precipitation is to occur.

Hexavalent chromium (e.g., $CrO4^{=}$ and $Cr2O7^{=}$) is toxic and soluble. The most efficient way of removing this from solution is a two-step process of reduction followed by precipitation.

Chromium (III) is much less toxic than chromium (VI), and forms an insoluble hydroxide which can be removed from solution by settling and filtration.

A number of chemicals are used for the reduction of chromium. Most common are sodium bisulfite, sodium metabisulfite, sulfur dioxide and ferrous salts. The reduction is accomplished readily at low pH with these reagents. Typical reduction reactions are:

$$3SO2 + Cr2O7^{=} + 2H^{+} = 2Cr^{+++} + 3SO4^{=} + H2O \qquad (12)$$

$$3SO3^{=} + Cr2O7^{=} + 8H^{+} = 2Cr^{+++} + 3SO4 = +4H2O \qquad (13)$$

$$6Fe^{++} + Cr2O7^{=} + 14H^{+} = 2Cr^{+++} + 6Fe^{+++} + 7H2O \qquad (14)$$

The reduced chromium and the ferric ions produced in the third equation will exist as the soluble sulfate at acid pH's. If the pH is above 5, the reaction rate is drastically reduced, and although dithionite will effect reduction at neutral pH's, it is very costly and may be contraindicated.

After the reduction step, lime or caustic soda is added to raise the pH to 8.5 - 9.0. Trivalent chromium will be precipitated.

$$Cr^{+++} + 3OH^{-} = Cr(OH)3 \qquad (15)$$

The theorectical solubility limit of chromium hydroxide is above 0.02 mg/l (8). It is reported that applying sulfur dioxide to a pigment waste consistantly reduces Cr(VI) and Cr(T) to 0.5 mg/l and 15 mg/l respectively as 30-day averages (8). By applying ferrous sulfide to a plating waste with an initial Cr(VI) concentration of 128 mg/l and Cr(T) concentration of 153 mg/l, an

effluent quality of less than 0.05 mg/l of either species is achieved (12).

A one-step precipitation-reduction process using sodium bisulfide is used in a dichromate plant to remove chromium from its waste water. An effluent quality with less than 1 microgram per liter Cr(VI), and less than 5 micrograms per liter Cr[T] was reported, (3).

One other common reduction process is the application of sodium borohydride to reduce metals in waste streams. Sodium borohydride is a mild but effective reducing agent (3), and is currently used in some chlor-alkali plants to reduce the soluble mercury ion to metallic mercury which is removed from solution by carbon adsorption:

$$4Hg^{++} + BH_4^- + 8OH^- = 4Hg + B(OH)_4^- + 4H_2O \qquad (16)$$

A mercury level of 0.01 mg/l in the final effluent has been reported, (3).

Sodium borohydride is also reported to be effective in removing silver, mercury, gold, lead, and cadmium (5). However, this technology is only being applied in limited cases, the cost of the chemical being the major drawback. The current cost for sodium borohydride is $16.00 per pound (23).

7.1.8 Oxidation Processes

The oxidation of organic substances is generally carried out by thermal processes such as wet oxidation and incineration, or by biological processes such as the activated sludge process, trickling filters, biodiscs, and aerated lagoons.

Incineration is actually a combination of oxidation and pyrolysis. Both involve chemical changes resulting from heat. Oxidation involves actual reaction with oxygen, while pyrolysis refers to rearrangement or breakdown of molecules. There are five types of incinerators available commercially. These are rotary kiln, multiple hearth, liquid injection, fluidized, bed and pyrolysis, (24). A minimum temperature of 1000 degrees C. and a residence time of two seconds is required for the reaction to proceed. This process has been shown to be successful in reducing pesticides to harmless modecules (25).

Wet oxidation is a process in which an aqueous waste can be oxidized in the liquid phase in a closed, high-temperature, high-pressure vessel. This reduces some of the problems (such as air pollution from exhaust gas), inherent in incineration. Wet oxidation has been used for a variety of wastes including pulping

waste and acrylonitrile liquor (26). A 99.8 + percent reduction of some of the priority toxic pollutants has been reported (27).

Thermal oxidation processes are not expected to have much application in the inorganic chemicals industry, mainly because of the high energy cost required and the low level of organic contamination found in the wastes.

The application of chemical oxidation to industrial wastes is well established for cyanides, sulfite, ammonia, and other harmful species in dilute waste streams (phenols, mercaptans, polysulfides, etc.). Common chemicals used as oxidizing agents included chlorine, hypochlorite, hydrogen peroxide, potassium permanganate, ozone, and chlorine dioxide. Air and oxygen are also used.

The most widely used chemical oxidation technology applicable to the inorganic chemicals industry is the oxidation of cyanide. The oxidation reaction between chlorine and cyanide is believed to proceed as follows:

$$CN^- + Cl_2 = CNCl + Cl^- \quad (17)$$

$$CNCl + 2OH^- = CNO^- + Cl^- + H_2O \quad (18)$$

The formation of cyanogen chloride (CNCl) is essentially instantaneous. The second reaction, the formation of cyanate, is accomplished most rapidly and completely at a pH of 10 or higher, (9, 28). A detention time of 30 minutes to two hours is usually allowed.

The cyanates can be further decomposed into nitrogen and carbon dioxide by excess chlorination or acid hydrolysis:

$$2CNO^- + 4OH^- + 3Cl_2 = 6Cl^- + 2CO_2 + N_2 + 2H_2O \quad (19)$$

$$CNO^- + 2H_2O = CO_2 + NH_3 + OH^- \quad (20)$$

The first reaction can be accomplished in about an hour if the pH is adjusted to 8.0-8.5. Acid hydrolysis usually takes place at pH 2-3 and care must be taken to avoid the liberation of the toxic cyanogen chloride as a gas. Hydrolysis is not usually the chosen option.

Other common chemicals used to oxidize cyanide include sodium hypochlorite, ozone, and hydrogen peroxide. The reaction for sodium hypochlorite is essentially the same as for chlorination. For ozone and hydrogen peroxide, the oxidation step proceeds as follows:

O: CN- = O2 + CNO- (21)

H:+ CN- = CNO- + H20 (22)

THvantage of using these two oxidizing reagents is that no dised solids are added to the waste water. In addition, excess rine is not discharged.

A nted process uses hydrogen peroxide and formaldehyde to decce cyanide at about 120 Deg. F. This has the advantage of precating cadmium and zinc simultaneously (9).

Alne chlorination is currently being practiced in one hydrogeyanide production plant. Laboratory studies in the plant cated that the presence of ammonia in the waste water reduces efficiency of cyanide removal. It is well known that ammoniacts with chlorine to form chloramines:

NH HOCl = NH2Cl + H20 (23)

NH + HOCl = NHCl2 + H20 (24)

NH+ HOCl = NCl3 + H20 (25)

Ifess chlorine is added, chloramines can be converted into nien oxide(s):

2N+ 4HOCl = N20 + 4HCl + 3H20 (26)

Thquation is not exact because the final form of nitrogexide is believed to be a mixture of nitrous oxide, nitrogeoxide and nitric oxide.

Theatment of cyanide by chemical oxidation is currently practicn the following industries:

Innic Chemicals (Hydrogen Cyanide Production)

Mi

Plg

Thee cyanide level after treatment is generally below 0.1 mg/).

7.1.9 Mane Processes

Mene processes have emerged in the last decade as a new promisiechnology for the treatment of saline water and waste

waters. A membrane is a semi-permeable barrier which allows the transport of some molecules (ions) and retains others. The driving force can either be electropotential differences (electrodialysis) or pressure difference (reverse osmosis and ultrafiltration). The major application of these processes has been the desalination of brackish water and sea water. More recently, these have also found application in a number of industries, including:

Mining
Electroplating
Metal Finishing
Printed Circuit Board Manufacturing
Battery Manufacturing
Pulp and Paper
Food Processing

In electrodialysis, an even number of alternating anion and cation selective membranes are placed between two electrodes. When current is applied the anions are attracted to the anode, and cations are attracted to the cathode. In the process of migration, the cations pass through the cation-permeable membrane and are blocked by the anion-permeable membrane. Likewise, the anions pass through the anion-permeable membrane and are blocked by the cation membrane. This results in alternating paths of purified water and concentrated reject (Figure 7-2).

The electrodialysis membranes are made very thin and are assembled in stacks. The flow path is the active portion of the cells. Pretreatment to remove suspended materials is absolutely essential. Other materials in the waste feed that may lead to membrane fouling include high organic content, calcium sulfate, and certain complex ions such as $ZnCl^-$ which can partially convert the anion membrane to the cation form, with significant loss in system performance (28).

As ionic concentration decreases, the electroconductivity of the water also decreases, making it less efficient to remove the remaining salt. Most operations do not produce a product water of less than 500 mg/l total dissolved solids.

Reverse osmosis (RO) and ultrafiltration (UF) are similar in basic concepts. Both are pressure-driven separation processes that employ high-flux semi-permeable membranes operating under dynamic flow conditions (29). In contrast to electrodialysis, these involve the transport of solvent, not solute, across the membrane.

Osmosis is a process in which solvent from a dilute solution is transported spontaneously across a semi-permeable membrane into a concentrated solution. By applying enough pressure to overcome this osmotic pressure, reverse osmosis, i.e., the

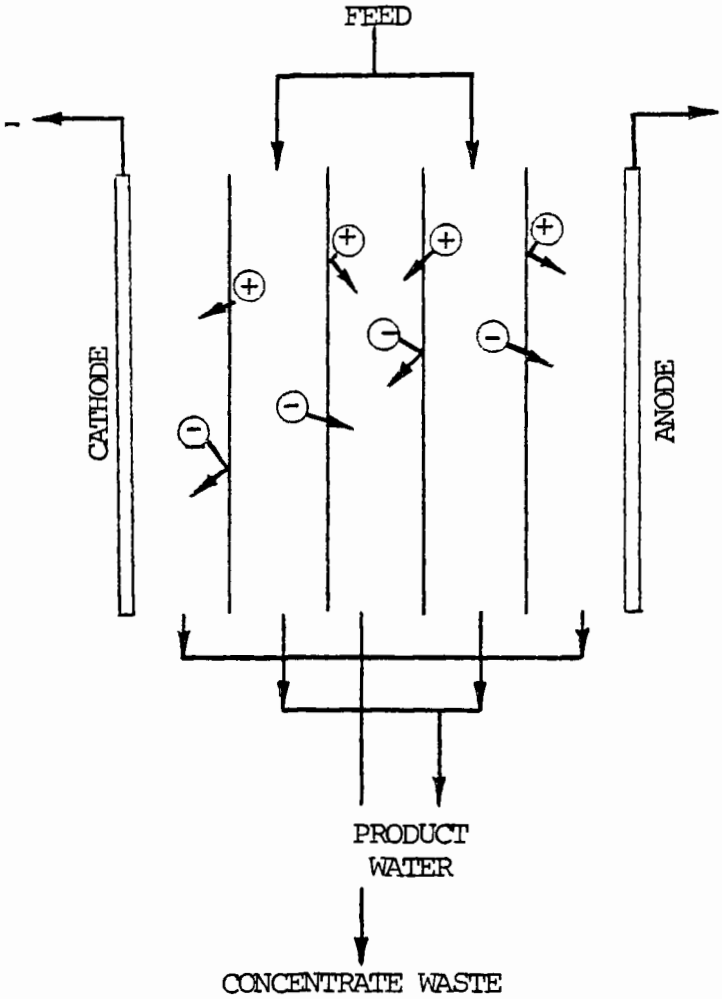

Figure 7-2. Electrodialysis process.

passage of solvent from a concentrated solution to a dilute solution through a semi-permeable membrane, occurs. The operating pressure of reverse osmosis units is usually between 350 and 600 psi. Ultrafiltration usually operates at a much lower pressure (5 to 100 psi). The predominant transport mechanism is selective sieving through pores. The membrane retains high molecular weight dissolved solids such as synthetic resins, colloids, and proteins. The upper and lower molecular weight limit is generally defined as 500,000 and 500 respectively.

Membranes are usually fabricated in flat sheets or tubular forms. The most common material is cellulose acetate but other polymers such as polyamides are also used. There are four basic module designs: plate-and-frame, tubular, spiral-wound, and hollow fiber. Table 7-2 is a comparison between the various reverse osmosis modules. Membrane processes are effective in removing (concentrating) inorganic and organic substances from a wastestream. Usually extensive pretreatment is required among others to reduce the suspended solids and control pH. Even so, there are still uncertainties about the operation efficiency, membrane lifetime, rejection specificity, and other factors. If recovery is not feasible, the concentrated reject must be disposed or treated by other methods. The high operation and capital cost limits the widespread application of these technologies. For these reasons membrane technique is not recommended as a BAT technology for this industry.

7.1.10 Adsorption

Adsorption is a surface phenomenon in which a substance is accumulated on the surface of another substance. Sorption of a solute on a solid surface is widely used in pollution abatement practices. The term "adsorbate" refers to the substance being concentrated, and the term "adsorbent" refers to the material that provides the surface.

Activated carbon is the prevalent adsorbent used. Both inorganic and organic substances are known to be removed effectively by activated carbon. Certain chlor-alkali plants are currently using activated carbon as a polishing step to remove mercury.

Activated carbon is made by charring basic substrates, such as wood, coke, coal, shell, husks, etc., at 600 degrees C. in a controlled atmosphere, where oxygen is kept low by adding carbon dioxide or steam. This process drives out volatiles, leaving a porous carbon lattice in an "activated" state.

Activated carbon can be obtained in powdered and granular form. Powdered carbon is about 50-70 microns in diameter, and 90 percent should pass through a 300-mesh screen.

TABLE 7-2 COMPARISON OF REVERSE OSMOSIS CONCEPTS

	Packing Density (ft^2/ft^3)	Water Flux at 600 psi (gal/ day/ft^2)	Water Output Per Unit Volume (gal/ day/ft^2)	Sodium Chloride Rejection	Parasitic Pressure Losses (psi) Feed Channel	Parasitic Pressure Losses (psi) Product Channel	Useful pH Range	Ease of Cleaning
Plate-and-Frame	150	10	1500	Very good	30	30	2-8	Fair
Large tubes	50	10	500	Very good	50	10	2-8	Very good
Spiral	250	10	2500	Very Good	10	50	2-8	Good to very good
Polyamide hollow fine fibers	5000	1 (400 psi)	5000	Fair	10	50	0-12	Fair
Cellulose acetate hollow fine fibers	2500	3 (250 psi)	7500	Good	10	50	3-7	Fair

Source: Weber, Physicochemical Processes, 1972.

Granular carbon is about 0.1-1 mm in diameter, this is three times more expensive than powdered carbon. The application involves the passage of the waste waters through a contact bed.

When the bed is exhausted, the carbon is either regenerated or sent to landfill. It is economical for large plants to regenerate the carbon. This can be done either by thermal regeneration in a rotary kiln or multihearth incinerator, or by chemical regeneration by using oxidizing agents such as hydrogen peroxide or acids and bases.

The application of carbon adsorption has been mainly in organic waste treatment. Recently, there are studies indicating this is also effective in removing mercury, cadmium, cyanide, chromium, lead, nickel, zinc, arsenic, and copper (30, 31).

An interesting development in carbon technology is its use after the waste water is ozonized. This combination (known as Bacteriologically Activated Carbon or BAC) has proved effective in treating otherwise biologically inactive organic compounds. The process involves chemical modification of the organics by the ozone. Maintenance of an aerobic region on the carbon allows a biologically activated film to develop and the modified organics are further treated by a mixed process of biological oxidation and carbon absorption.

The system has the advantage of being a potential add-on to existing BPT systems, and should be cost effective since it has been found that the carbon only needs regeneration at infrequent intervals.

No industrial applications of this technology are known, although research is under way (32).

Bacteriologically Activated Carbon is a very attractive potential BAT technology for the removal of organic priority pollutants from waste streams, although no application to the industry subcategories studied in this report was found.

7.1.11 Fluoride Removal

The conventional method of treating fluoride-bearing wastes is to precipitate the fluoride as calcium fluoride by the addition of lime. The reaction is:

$$Ca(OH)2 + 2F- = CaF2 + 2OH- \qquad (27)$$

Using this process alone, it is difficult to remove fluoride to below 8 mg/l due to the solubility of calcium fluoride (9, 33). Adding alum with the lime generally improves the removal efficiency. Fluoride ions are removed as follows:

$$Al(OH)_3 + F^- = Al(OH)_2F + OH^- \quad (28)$$

$$Al(OH)_2F + F^- = Al(OH)F_2 + OH^- \quad (29)$$

$$Al(OH)F_2 + F^- = AlF_3 + OH^- \quad (30)$$

Complexed fluorides are also adsorped to some extent on the aluminum hydroxide surface and removed in the coagulation process (33). Large amounts of alum (5000 mg/l) are required to reduce the fluoride concentration to below 1 ppm.

Activated alumina has been shown to be effective in removing fluoride and arsenic in waste water, (34), and from drinking water in municipal water treatment practice (35-38). Typically, the fluoride content of raw water can be reduced from about 8 to 1 ppm (38). Application of activated alumina to high fluoride industrial wastes shows that a low ppm effluent can be achieved (39), although high capital and operation costs generally limit the wide application of this process.

Certain process operations used in the manufacture of inorganic fluoride compounds involve the use of sulfuric acid and starting materials which contain silicate or borate impurities. This may lead to the formation of wastes containing fluorosulfonate, hexafluorosilicate or tetrafluoroborate complex ions. Although tetrafluoroborate is usually a very minor constituent and the hexafluorosilicate is readily hydolyzed in treatment systems, the fluorosulfonate ion is fairly stable and presents a serious problem where low levels of total fluoride are required. The lime precipitation method is not effective in removing the fluorosulfonate and the effectiveness of adsorption techniques is not known.

SECTION 8

TREATABILITY ESTIMATES AND LONG TERM DATA ANALYSIS

8.1 THE DEVELOPMENT OF TREATABILITY ESTIMATES

The review of technological treatment options applicable to the removal of priority pollutants has lead to the conclusion that the particular contaminants found in the raw process waste waters of the subject industries can be effectively controlled by the proper application of fairly well-known and demonstrated techniques. In order to proceed from a general discussion and description of techniques to a detailed evaluation for each subcategory of the levels of removal that can be expected, a summary is now presented of selected treatability data for the 13 priority metals.

The treated waste concentrations and removal efficiencies reported in the literature are assumed to represent the best performance characteristics that can be obtained under the specified operating conditions. The treatment technologies considered can thus be assigned a set of optimum conditions and best performance estimates for removal of the particular priority metals that are amenable to treatment. Taking each metal in turn, Tables 8-1 through 8-10 give the initial and final concentrations, the removal efficiencies, and the pH conditions for different treatment technologies. The best performance estimates for metal removal are derived from the tabulated data and are utilized in turn as the bases for making long-term achievable performance estimates. The sequence of analytical steps is:

1. Review and analyze applicable performance data.

2. Estimate best performance under optimum treatment conditions.

3. Estimate achievable performance under expected industrial operating conditions.

The third step involves the consideration of treatment

TABLE 8-1. WASTE WATER TREATMENT OPTIONS AND PERFORMANCE DATA SUMMARY - ANTIMONY AND ARSENIC REMOVAL

Treatment Technology	Initial Concentration (mg/l)	pH	Removal (%)	Final Concentration (mg/l)	References
Antimony					
Lime/Filter	0.6	11.5	28	0.4	40
Ferric chloride/Filter	0.5	6.2	65	0.2	40
Alum/Filter	0.6	6.4	62	0.2	40
Arsenic					
Lime Softenin	0.2	-	85	0.03	9,10
Sulfide/Filter	-	6-7	-	0.05	9,10
Lime (260 mg/l)/Filter	5.0	10.0	80	1.0	41
Lime (600 mg/l)/Filter	5.0	11.5	72	1.4	41
Ferric sulfate	0.05	5-7.5	90	0.005	42
Ferric sulfate	5.0	6.0	90	0.5	41
Lime/Ferric Chloride/ Filter	3.0	10.3	98	0.05	9,10
Activated alumina (2g/l)	0.4-10	6.8	96-99+	<0.4	43
Activated carbon (3 mg/l)	0.4-10	3.1-3.6	63-97	<4.0	43
Ferric Chloride	0.3	-	98	0.05	9,10
Ferric Chloride	0.6-0.9	-	-	<0.13	9,10

TABLE 8-2. WASTE WATER TREATMENT OPTIONS AND PERFORMANCE DATA SUMMARY - BERYLLIUM AND CADMIUM REMOVAL

Treatment Technology	Initial Concentration (mg/l)	pH	Removal (%)	Final Concentration (mg/l)	References
Beryllium					
Lime/Filter	0.1	11.5	99.4	0.006	40
Cadmium					
Lime (260 mg/l)/Filter	5.0	10.0	95	0.25	41
Lime (600 mg/l)/Filter	5.0	11.5	98	0.10	41
Lime Softening	0.44-1.0	5-6.5	92-98	0.008	8
Lime/Sulfide	0.3-10	8.5-11.3	98+	0.006	44
Ferrous Sulfide (Sulfex)	4.0	8.5-9.0	99+	< 0.01	7, 8, 11, 12
Ferrite coprecipitation/ Filter	240	neutral	99+	0.008	5

TABLE 8-3. WASTE WATER TREATMENT OPTIONS AND PERFORMANCE DATA SUMMARY - COPPER REMOVAL

Treatment Technology	Initial Concentration (mg/l)	pH	Removal (%)	Final Concentration (mg/l)	References
Lime/Filter	3.2	8.5-9.0	98	0.07	8
Lime (260 mg/l)/Filter	5.0	10.0	92	0.4	41
Lime (600 mg/l)/Filter	5.0	11.5	91	0.5	41
Ferric sulfate/Filter	5.0	6.0	95	0.3	41
Lime	10-20	>8.5	90	1-2	9,10
Lime	3.0	9.5	93	0.2	45
Alum	3.0	6.5-7.0	93	0.2	45
Lime/Sulfide	50-130	5.0-6.5	-	<0.5	44
Ferrous sulfide (Sulfex)	3.2	8.5-9.0	99	0.02	8,12
Ferrous sulfide (Sulfex)	4.0	8.5-9.0	99+	0.01	7,8,11
Ferrite coprecipitation/ Filter		-	99+	0.01	5

TABLE 8-4. WASTE WATER TREATMENT OPTIONS AND PERFORMANCE DATA SUMMARY - CHROMIUM III AND CHROMIUM VI REMOVAL

Treatment Technology	Initial Concentration (mg/l)	pH	Removal (%)	Final Concentration (mg/l)	References
Chromium III					
Lime (260 mg/l)/Filter	5.0	10.0	98	0.1	41
Lime (600 mg/l)/Filter	5.0	11.5	98	0.1	41
Reduction/Lime	140 (as Cr VI)	7-8	-	1.0	9,10
Reduction/Lime	1300 (as Cr VI)	7-8	-	0.06 CrIII	3,9,10
Lime Softening	-	10.6-11.3	98+	0.15	46
Lime/Filter	-	7-9	-	0.05	47
Lime	15	9.5	-	0.1	45
Lime	3.2	9.5	-	< 0.1	45
Ferrite coprecipitation/ Filter	10	-	-	< 0.01	5
Ferric sulfate	-	6.5-9.3	98+	-	46
Ferric sulfate/Filter	5.0	-	99	0.05	41
Chromium VI					
Activated carbon (pulverized, Pittsburgh type RC)	10	3.0	85	1.5	48
Same as above	10	2.0	96	0.4	48
Activated carbon (granular)	3	6.0	98	0.05	41
Ferrite coprecipitation	0.5	-	-	not detectable	5
Sulfur dioxide reduction	-	-	-	0.01-0.1	9,10
Bisulfite reduction	-	-	-	0.05-1.0	9,10

TABLE 8-5. WASTE WATER TREATMENT OPTIONS AND PERFORMANCE DATA SUMMARY - LEAD REMOVAL

Treatment Technology	Initial Concen-tration (mg/l)	pH	Removal (%)	Final Concen-tration (mg/l)	References
Lime/filter	189	8.5-9.0	99.9	0.1	5
Lime (260 mg/l)/FIlter	5.0	10.0	98.5	0.075	41
Lime (600 mg/l)/Filter	5.0	11.5	98.0	0.10	41
Ferrous sulfate/Filter	5.0	6.0	98.5	0.075	41
Sodium hydroxide/Filter	1700	10.5	99+	0.60	49
Sodium carbonate/Filter	1260	10.1	99+	0.60	49
Sodium carbonate/Filter	5.0	9.0-9.5	99+	0.01-0.03	9,10
Ferrous sulfide (Sulfex)	189	8.5-9.0	99.9	0.1	8,12
Ferrite coprecipitation/ Filter	475	-	99.9	0.01	5

TABLE 8-6. WASTE WATER TREATMENT OPTIONS AND PERFORMANCE DATA SUMMARY - MERCURY II REMOVAL

Treatment Technology	Initial Concentration (mg/l)	pH	Removal (%)	Final Concentration (mg/l)	References
Sulfide	0.3-50.0	-	-	0.01-0.12	9,10
Sulfide	10.0	10.0	96.4	1.8	50
Sulfide/Filter	16.0	5.5	99	0.04	50
Sulfide/Filter	36.0	4.0	99.8	0.06	50
Sulfide/Filter	0.3-6.0	5.8-8.0	87-99.2	0.01-0.125	50
Ferrite coprecipitation/ Filter	6.0-7.4	-	99.9	0.001-0.005	5
Activated Carbon	0.01-0.05	-	-	<0.0005	9,10
Activated Carbon/Alum	0.02-0.03	-	-	0.009	46
Activated Carbon	0.06-0.09	-	-	0.006	50

TABLE 8-7. WASTE WATER TREATMENT OPTIONS AND PERFORMANCE DATA SUMMARY - NICKEL REMOVAL

Treatment Technology	Initial Concentration (mg/l)	pH	Removal (%)	Final Concentration (mg/l)	References
Lime	75	8.5-9.0	98	1.5	8
Lime (260 mg/l)/Filter	5.0	10.0	94	0.3	41
Lime (600 mg/l)/Filter	5.0	11.5	97	0.15	41
Caustic Soda/Filter	-	11.0	-	0.3	49
Ferrous sulfide (Sulfex)	75	8.5-9.0	99.9	< 0.05	8, 11, 12

TABLE 8-8. WASTE WATER TREATMENT OPTIONS AND PERFORMANCE DATA SUMMARY - SILVER REMOVAL

Treatment Technology	Initial Concentration (mg/l)	pH	Removal (%)	Final Concentration (mg/l)	References
Sodium hydroxide	54	9.0	72	15	13
Ferric sulfate (30 mg/l)	0.15	6-9	72-83	0.03-0.04	46
Lime Softening	0.15	9.0-11.5	80-93	0.01-0.03	46
Chloride precipitation (alkaline chlorination in the presence of cyanide)	105-250	-	97+	1.0-3.5	9,10
Ferric chloride/Filter	0.5	6.2	98.2	0.04	40
Sulfide precipitation	-	5-11	very high	-	9,10

TABLE 8-9. WASTE WATER TREATMENT OPTIONS AND PERFORMANCE DATA SUMMARY - SELENIUM AND THALLIUM REMOVAL

Treatment Technology	Initial Concentration (mg/l)	pH	Removal (%)	Final Concentration (mg/l)	References
Selenium					
Ferric chloride/Filter	0.1	6.2	75	0.03	40
Ferric chloride/Filter	0.05	6.2	80	0.01	40
Alum/Filter	0.5	6.4	48	0.26	40
Ferric sulfate	0.10	5.5	82	0.02	51
Ferric sulfate	0.10	7.0	75	0.03	51
Lime/Filter	0.5	11.5	35	0.3	40
Lime/Filter	0.06	11.5	38	0.04	40
Thallium					
Lime/Filter	0.5	11.5	60	0.2	40
Ferric chloride/Filter	0.6	6.2	30	0.4	40
Alum/Filter	0.6	6.4	31	0.4	40

TABLE 8-10. WASTE WATER TREATMENT OPTIONS AND PERFORMANCE DATA SUMMARY - ZINC REMOVAL

Treatment Technology	Initial Concen-tration (mg/l)	pH	Removal (%)	Final Concen-tration (mg/l)	References
Lime/Filter	3.6	8.5-9.0	93	0.25	8
Lime (260 mg/l)/Filter	5.0	10.0	84	0.8	41
Lime (600 mg/l)/Filter	5.0	11.5	77	1.2	41
Lime/Filter	16	-	-	0.02-0.23	5
Sodium hydroxide	33	9.0	97	1.0	13
Sulfide	42	-	97	1.2	5
Ferrous sulfide (Sulfex)	3.6	8.5-9.0	99+	0.01-0.02	8,11,12
Ferrite coprecipitation	18	-	99+	0.02	5

system variables under full-scale operating conditions in industrial situations where the design objective would be the simultaneous removal of several waste load constituents. Each industry designs for maximum removal and/or recovery of the major process-related waste substances and utilizes an appropriate technology which is both reliable and cost effective. Optimum treatment conditions for the removal of a particular pollutant can rarely be achieved consistently and any given set of conditions will be somewhat less than optimum for most, if not all, of the treatable constituents. In any well-operated production facility the normal variations in product rates, raw material quality, the desired product mix in some cases, and contact water use requirements may cause severe hydraulic and pollutant load input excursions which at best can be moderated by effective equalization in the treatment system. This is considerably less of a problem in batch treatment than with a continuously operating system. The latter requires continuous feedback monitoring for pH control and chemical dosage in order to maintain the effluent quality within acceptable limits for a number of parameters. Under these conditions, the 30-day averages derived from the actual treated effluent monitoring data (NPDES, etc.) would equate to what has been identified in Step 3 above as the estimated 30-day achievable performance using the same general treatment technology.

The estimated long term achievable performance values are presented in Table 8-11.

A statistical evaluation of long-term monitoring data is described below and the results are presented in Appendix A where various derivative quantities such as long term averages and standard deviations are tabulated and the bases for formulating the variability factors applicable to each subcategory are explained in detail.

For each nonexcluded subcategory, a tabular presentation of the logic used to develop effluent limitations is given, based on performance estimates for 30-day average concentrations for specific pollutants. When available, these concentrations are based on industry monitoring data. When long-term data are not available from industry, as is the case with most priority pollutants, achievable concentrations are based on the treatability of these pollutants as discussed in Section 8 and summarized in Table 8-11.

Variability factors applied to these concentrations for the development of monthly average and daily maximum limitations are based on statistical analysis of long-term data as presented below and in Appendix A. In many cases, due to the limited amount of long-term data available, variability factors observed in one subcategory are applied in other subcategories where similar treatment technologies are practiced.

TABLE 8-11. ESTIMATED ACHIEVABLE 30-DAY AVERAGES FOR THE APPLIED TECHNOLOGIES

	Final Concentrations (mg/l)						
	Lime Settling	Lime Filter	Sulfide Filter	Ferrite Coprecip-itation Filter	Soda Ash Settling	Soda Ash Filter	Alum
Antimony, Sb	0.8-1.5	0.4-0.8					
Arsenic V	0.5-1.0	0.1-0.5	0.05-0.1				
Beryllium, Be	0.1-0.5	0.01-0.1					
Cadmium, Cd	0.1-0.5	0.05-0.1	0.01-0.1	<0.05			
Copper, Cu	0.5-1.0	0.1-0.7	0.05-0.5	<0.05			
Chromium III, Cr^{+3}	0.1-0.5	0.05-0.5		<0.05			
Lead, Pb	0.5-1.0	0.1-0.8	0.1-0.4	<0.05	0.4-0.8	0.1-0.6	
Mercury II, Hg			0.01-0.05	<0.01			
Nickel, Ni	0.5-1.0	0.1-0.5	0.1-0.5				
Silver, Ag	0.4-0.8	0.2-0.4	0.05-0.2				
Selenium, Se	0.2-1.0	0.1-0.5					
Thallium, Tl	0.2-1.0	0.1-0.5					0.2-0.5
Zinc, Zn	0.5-1.0	0.4-0.8	0.2-0.5	0.2-0.5			
Fluoride (Free), F	25	15					

TABLE 8-11 continued

	Final Concentrations (mg/l)					
	Ferric Chloride	Activated Carbon	SO_2 Reduction	Bisulfite Reduction	Lime/$FeCl_2$ Filter	Akaline Chlor-ination
Arsenic V, As	0.05-0.5	0.3			0.02-0.1	
Chromium VI, Cr^{+6}		0.1	0.05-0.1	0.05-0.5		
Mercury II, Hg		0.01				
Silver, Ag	0.05-0.1					
Selenium, Se	0.05-0.1					
Thallium, Tl	0.7					
Cyanide (Free), CN_A						0.1-0.5

8.2 THE USE OF HISTORICAL POLLUTANT DATA

8.2.1 Determination of Enforcement Guidelines Based Upon Historical Performance

In cases where there has been long term monitoring of the pollution levels in the effluent stream discharged by a plant, it is possible to assess plant pollution performance through analysis of historical data that has been collected for this purpose. The appropriateness of standards constructed from data collected from a single plant performance is, of course, dependent on the plant's current performance in relation to the performance of other plants in the manufacturing subcategory. As economically feasible alternative waste treatment technologies become available, pollutant discharge guidelines need be reviewed and revised to reflect these advances. Recommendations for using methods presented in this section should, therefore, be construed as useful for "monitoring" situations rather than those which require "normative" ones. These methods serve to insure that proper maintenance of treatment facilities preserves the capability to effectively reduce waste pollutant levels.

Statistical analysis of historical monitoring data is required to assess a plant's ability to discharge within set guidelines. To perform this analysis certain assumptions must be made regarding the nature of applicable statistical or probabilistic models, the constancy of the operation of the treatment facility, and the quality of the monitoring methods. Assumptions made in this report are outlined in the following sections.

Assumptions Concerning Daily Pollutant Level Measurements

In the formulation and calculation of the following performance standards, individual sample measurements of pollutant levels were assumed to follow the lognormal distribution, a well known and generally accepted statistical probability model used in pollution analyses. It follows, then, that the logarithms of these measurements follow a normal probability model. It was also assumed that monitoring at a given plant was conducted responsibly and in such a way that resulting measurements can be considered statistically independent and amenable to standard statistical procedures. A final assumption was that treatment facilities and monitoring techniques had remained substantially constant throughout the monitoring period. Summaries of the data extracted from 308 Questionnaires are presented in the tables Addendum A. In these tables, the minima (min), arithmetic averages (aver), maxima (max), and standard deviations, (st dev), were computed directly from the data using standard statistical formulae. No

logarithmic transformations were necessary to accomplish the calculations. The tables are representative of currently achieved pollutant discharge performance levels in the several plants presented.

8.2.2 Assumptions Concerning 30-Day Average Pollutant Level Measurements.

While individual pollution level measurements should be assumed lognormally distributed, that same assumption is not appropriate when studying 30 day averages. These averages are generally not distributed as lognormal quantities. However, if, averages are taken over a reasonably large number of days, a statistical principle, the "Central Limit Theorem", states that procedures which are appropriate for a normal (not lognormal) probability model should be applied. Therefore, the methods used in computing historical performance characteristics for 30-day averages differ somewhat from those used for daily samples in that the coefficient of variation* as defined below, is the primary determinant of the variability factor for the normal probability model.

[* Coefficient of variation is defined as the ratio of a statistical populations standard deviation to its average value.]

8.2.3 Variability Factor for Daily Samples.

Since 30 day average and daily sample data require different approaches, separate presentation of their methods are given here. Variability factors for daily observations are presented initially. In the analysis of daily data the inherent variability of measured pollutant levels in the effluent stream from inorganic chemical manufacturing processes must be incorporated in calculating upper limits for daily pollutant discharge levels. Even well treated and controlled plants may experience some days when an atypically high level of pollutant discharge is present in their waste stream. Such high variations may be due to a variety of factors, such as short term maladjustments in treatment facilities, variation in flow or pollutant load, or changes in the influent stream. To allow for this variability, performance standards must necessarily be set above the plant's long term average performance and occasional, infrequent excessive discharges permitted. Since pollutant discharge is often expressed in terms of average level, it is convenient to describe standards of performance and allow variability in term of multiples of this average. Such a method of computing standards as functions of multiples of average level performance is explained below. The ratio of the pollutant standard level to the estimated long term average is commonly called the "variability factor". This factor is especially

useful with lognormally distributed pollutant levels because its value depends upon the expected number of excessive discharge periods and upon the day to day variation of the process, but is independent of the long term average, so that variations in average discharge do not affect its value.

For a lognormal population, the relationship between the pollutant standards, P, and the estimated long term average, A, can be shown to be:

$$\ln(P/A) = S(Z-0.5S)$$

where

1) S is the estimated standard deviation of the logarithms of pollutant level measurements. In the calculations which follow, S is computed by the statistical procedure known as the "method of moments". This procedure requires that S be computed as the square root of the natural logarithm of one plus the square of the estimated coefficient of variation.

and

2) Z is a factor derived from the standard normal distribution. Z is chosen to give enforcement limitations which provide a balance between appropriate consideration of day to day variation in a properly operating plant and the necessity to insure that a plant is operating properly. If the Z value is too high, a treatment facility may deteriorate appreciably without triggering an enforcement action. If it is too low, unneeded enforcement actions will occur.
3) "ln" represents the natural logarithm (base e) of a numerical quantity.

The value chosen for Z is very highly dependent on the conditions which trigger an enforcement action and the nature of the surveillance (monitoring) of a plant. If there is daily sampling, and if an enforcement action is triggered by frequent violations, and if "frequent violations" are ". . . those which occur more than once in any four quarters.", then a choice of Z = 2.78 is appropriate. Using the limitations computed for this value of Z, one expects that only one violation will occur among 365 daily measurements, that is, one expects that 364/365ths or 99.73% of a years measurements will not exceed the limitation. An alternative criterion for which one expects that only 1% (5%) of the daily observations of a properly operating plant exceed the limitation would be to choose Z = 2.33 (Z = 1.64).

8.2.4 Variability Factor for 30-Day Averages

Using averages of 30 lognormally distributed measurements to ascertain conformance to effluent limitations introduces

complications in the computation of variability factors. As has been noted before, the statistical distribution of 30 day (or "calendar monthly") averages is the well known normal distribution. The variability factor for this distribution is a different function of the underlying coefficient of variation than previously given for daily maxima.

For the normal distribution appropriate to 30 day averages, the relationship between the discharge standard, P, and the estimated long term average, A, may be demonstrated to be:

$$P/A = 1.00 + Z(CV)$$

where

1) Z is determined in the same manner as for daily data above except that Z values differ because only 11 of 12 measurements in one year must meet standards,

and

2) CV is the estimated coefficient of variation computed from the sample of historical monthly averages; i.e. CV = S/A. In this case A and S are computed directly from the monthly averages. No logarithmic transformations are involved.

The results of computations on historical data under the assumptions outlined above are presented in Appendix A. The variability factors for daily maxima are computed using A = average of daily measurements and, as the method of moments stipulates, S = the square root of the natural logarithm of one plus the square of the estimated coefficient of variation of the untransformed (not logarithmic) daily measurements. The variability factors for monthly averages are computed using A = average monthly average and S = standard deviation of monthly averages (untransformed).

SECTION 9

TREATMENT TECHNOLOGY APPLICATIONS FOR PRIORITY POLLUTANT REMOVAL

9.1 SELECTION OF POLLUTANTS TO BE CONTROLLED

In order to determine which priority pollutants, if any, may require effluent limitations, the pollutants observed in each subcategory were evaluated with regard to their treatability and potential environmental significance on the basis of the raw waste concentrations and mass loadings found during screening and verification.

Group 1 - Those metals which appear at concentration levels that are readily treatable using available technology and which have environmentally significant mass emission rates.

Group 2 - Potentially significant metals observed in the subcategory

Table 9-1 presents the significant priority pollutant metals found in each subcategory, and divides these metals into two groups. In general, those metals occuring in the first group are of prime concern and may require regulation, while those occurring in the second group are of somewhate less concern and are not expected to require regulation.

9.2 APPLICATION OF ADVANCED LEVEL TREATMENT AND CONTROL ALTERNATIVES

9.2.1 General Design Objectives

Beginning with Section 11 of this document, the selection and application of priority pollutant treatment and control technology for model plant systems for each of the subcategories proposed for regulation are described. Level 1 represents existing BPT treatment systems and the advanced levels (Level 2, 3, etc.) are the selected technologies for step-wise improvements in priority pollutant removal over that achieved by the BPT system. Flow diagrams show BPT components as a starting point for advanced level treatment additions and incremental cost estimates.

TABLE 9-1. PRIORITIZATION OF POLLUTANT METALS FOUND IN EACH SUBCATEGORY

SUBCATEGORY	Group 1	Group 2
Chlorine-diaphragm cell	Antimony Arsenic Chromium Copper Lead Nickel	Cadmium Mercury Selenium Thallium Zinc
Chlorine-mercury cell	Arsenic Mercury Thallium Zinc	Antimony Cadmium Chromium Copper Lead Nickel Silver
Hydrofluoric Acid	Arsenic Chromium Copper Lead Mercury Nickel Selenium Zinc	Antimony Cadmium Thallium
Titanium Dioxide - Chloride Process	Chromium Lead Nickel Zinc	
Titanium Dioxide - Sulfate Process	Arsenic Cadmium Chromium Copper Lead Nickel Thallium Zinc	Antimony
Aluminum Fluoride	Copper Selenium	Arsenic Cadmium Chromium Mercury Nickel

TABLE 9-1 - continued

SUBCATEGORY	Group 1	Group 2
Chrome Pigments	Antimony Cadmium Chromium Cyanide Lead Nickel Zinc	
Hydrogen Cyanide	Cyanide	
Sodium Dichromate	Chromium Nickel Zinc	Arsenic Copper Selenium Silver
Copper Sulfate	Arsenic Cadmium Copper Nickel Zinc	Antimony Lead
Nickel Sulfate	Nickel	Cadmium Chromium Copper Lead Mercury Selenium Thallium
Sodium Bisulfite	Zinc	Antimony Cadmium Chromium Copper Lead Mercury Nickel

For both existing and new sources, the advanced level technology options are selected as candidates for BAT with priority pollutant removal as the primary objective. Although the advanced level systems chosen also give improved performance over the Level 1 (BPT) systems for the removal of conventional and nonconventional pollutants, this is regarded as a secondary design objective.

9.2.2 Pretreatment Technology

Since untreated heavy metal ions will usually pass through the treatment provided in a typical POTW, or will be precipitated with the POTW solid residue, pretreatment of wastes containing significant amounts of heavy metals is necessary. As a general rule, alkaline precipitation, followed by settling and removal of the solids, will suffice. In certain subcategories, such as the chlorine industry, specific treatment will be required for highly critical constituents (mercury, lead, chlorinated organics and asbestos). Normally the Level 2 model treatment processes shown in the following subsections will be appropriate for pretreatment prior to discharge to a POTW.

9.2.3 New Source Performance Standards

In only one subcategory, hydrofluoric acid, is a technology proposed for new sources. For the remaining subcategories, the Level 2 model treatment process is considered appropriate technology for new sources.

9.3 ESTIMATED ACHIEVABLE PERFORMANCE CHARACTERISTICS FOR ADVANCED LEVEL APPLICATIONS

Advanced level control and treatment alternatives for reduction of pollutant discharges and their applicability to each subcategory are presented in the sections dealing with individual products. With few exceptions, these alternatives were selected specifically for removal of priority pollutants and were designed for end-of-pipe treatment.

Treatment technologies practiced outside the industry are recommended when appropriate and, in most cases, apply to the removal of priority pollutant metals. The estimated 30-day average treatability levels (Sections 8, Table 8-11), long term data parameters, and the screening and verification results are all utilized in the development of estimated performance characteristics for the recommended treatment applications in each subcategory.

9.3.1 Advanced Level Removal of BPT Pollutants

Performance estimates for these systems, when possible, were based on effluent quality achieved at plants currently practicing thes technologies. However, in most cases, the advanced levels are not currently being practiced within the specific subcategory of concern, and performance information from other appropriate sources is necessarily utilized.

When established waste water treatment practices, such as clarification or filtration, form a part of advanced treatment alternatives, the specified achievable effluent quality has been based on concentrations accepted as achievable through proper design and control. The prime example of this is suspended solids reduction by filtration.

9.3.2 Advanced Level Removal of Priority Pollutants

Performance estimates for priority pollutants were also based, when possible, on effluent quality achieved at plants currently practicing these technologies. However, in most subcategories, priority pollutant analyses are not conducted unless a specific pollutant is regulated and requires monitoring. Where transfer of technology is applied as a treatment alternative, performance estimates for priority pollutant removals were based on the demonstrated performances in other industries while incorporating allowances for specific differences in process waste characteristics and operating conditions. Statistically derived long-term monitoring data parameters were described in Section 8 and are compiled in tabular form in Appendix A. The screening and verification data are used to supplement the available long-term data applied to each subcategory. A judgment is made as to whether the screening and verification data represent a well performing system or one which is not performing at its technological potential. For a well performing system, the data are regarded as representative of 30-day averages and are compared with the estimated treatability ranges from Table 8-11, as well as the 30-day averages developed from the long-term data. In this manner, the performance estimates for each pollutant, at each treatment level for the nonexcluded subcategories, are developed and presented in tabular summaries. By starting with the estimated achievable 30-day averages, the specific variability factor ratio derived for each pollutant is used to estimate the daily maximum values.

The model plant waste flow per unit of production is then taken to calculate the estimated mass emission values of the 30-day average and daily maximum limits for each pollutant to be controlled.

SECTION 10

COSTS OF TREATMENT AND CONTROL SYSTEMS

10.1 INTRODUCTION

10.1.1 Purpose of Cost Data

More complex treatment methods and higher levels of pollutant removal are reflected in increased costs of equipment, energy, labor and chemicals. At some point, the increasing costs of treatment will outweigh the benefits of such treatment. Therefore, it is important that for each subcategory the Agency know the base cost and he incremental costs of each level of treatment which it might prescribe. These "options" of internal costs, which are the industry's annual costs of providing the necessary waste treatment, will result in related increases in product costs, which are termed external costs. Thus annual costs of waste treatment are expressed in terms of dollars per unit of annual production of the principal product.

Because plant visits revealed very few treatment plants serving a single product manufacturing line, it was not feasible to seek actual waste treatment facilities which could serve as real models for estimating purposes. Accordingly, the cost data were taken from similar construction projects by the contractor, and from unit process equipment costs assembled from vendors and other commercial sources. Because the model costs apply to a wide range of climate, material sources and labor conditions they should be considered as preliminary estimates within plus or minus 15 to 25 percent.

Actual costs incurred by individual plants may be more or less than the presented model plant costs. The major causes of variability are:

1. Waste water treatment combined with the treatment of other product effluents.

2. Site dependent conditions, as reflected in piping lengths, climate, land availability, water and power supply and the location of the points of final

discharge and solids disposal.

3. Material (reagent) costs, due to variation in availability and distance from the source.

The construction costs are based on the Engineering News Record Construction Index for July 1978 (ENRCI=2800), and other costs are expressed in mid-1978 dollars.

10.1.2 General Approach

Since few single product waste treatment plants were available for detailed study, the costs presented in this section are based on model plants which closely resemble the types and capacities of waste treatment facilities needed for each separate product subcategory. The model plant selections are based on review of Section 308 Questionnaire responses, plant visits, development documents, contacts with the industries to verify treatment practices and to obtain data on size, waste water flow, and solid waste disposal systems. Thus, each model is synthesized from actual data as a typical plant in its subcategory with a level of waste treatment equivalent to BPT. Variations in treatment plant capacity are accounted for by selecting sets of models which represent the range of existing production plant capacities in the subcategory; large, medium and small. Thus the model plants are not set up as exemplary plants, but as typical plants of adequate design which represent the range of plants and treatment facilities found in the subcategory.

10.1.3 Cost References and Rationale

Cost information contained in this report was obtained directly from industry, engineering firms, equipment suppliers and current experience of the contractor. Whenever possible, costs are based on actual industrial installations or engineering estimates for projected facilities as supplied by industries consulted during the study. In the absence of such information, cost estimates have been developed from either current costs for similar waste treatment installations at plants making other inorganic chemicals or from general cost estimates for specific treatment technologies.

Treatment costs are based on model production plant characteristics which determine the treatment processes selected for each operation. Under set effluent limitations, treatment costs are primarily functions of the pollutant load (i.e., kg/kkg of product), waste water flow rate (i.e., cubic meters/day). Available data indicate that both pollutant loads and flow rates

can vary significantly among plants manufacturing the same product.

10.1.4 Definition of Levels of Treatment and Control Cost Development

For the purpose of establishing the base level treatment costs, each industry is assumed to be practicing Best Practicable Control Technology Currently Available (BPT), which the EPA Effluent Limitations Guidelines required by 1977 for certain pollutants (conventional and nonconventional, as well as some of the priority toxic pollutants) specified for each subcategory. The investment costs and annual costs of such BPT systems are shown in this report as the base level or Level 1. This level of treatment may also provide incidental removal of additional priority toxic pollutants not previously specified in the regulations.

The advanced treatment levels (Level 2, Level 3, etc.) are aimed primarily at reduction of priority toxic pollutants to levels considered acceptable for July 1, 1984, performance, utilizing Best Available Technology Economically Achievable (BAT) at incremental investment and annual costs beyond those shown for Level 1. For example, for Level 3 treatment, the incremental cost as given in the table is directly added to base or 1st Level cost to obtain the total cost of the treatment system. The addition of the Level 2 incremental cost is not required to obtain the Level 3 total. The waste water treatment flow diagram for Levels 2, 3, etc., as given under Section 8 of this report, includes the flow diagram for base or Level 1 of treatment. This is because increment levels of treatment are always added to the 1st level of treatment.

10.1.5 Treatment and Disposal Rationale Applied to Cost Development

The following assumptions are employed in the cost development:

1. All noncontact cooling water is excluded from treatment (and treatment costs) provided that no pollutants are introduced.

2. Water treatment, cooling tower and boiler blowdown discharges are not considered process waste water unless such flows contain significant amounts of pollutants.

3. Sanitary sewage flow is excluded.

4. The plants are assumed to operate 24-hours per day, 350 days

a year, except where noted otherwise.

5. Manufacturing plants are assumed to be single product plants.

6. The inorganic chemical industry has generally found and extensively uses in-plant control techniques such as in-process abatement measures, housekeeping practices, and recycling of process waste waters to recover valuable materials or use these materials as feed for other by-products. Segregation of uncontaminated cooling and other waters prior to treatment and/or disposal, and similar other measures can contribute to waste load reduction. All such costs have not been included in the cost estimates.

7. Excluded from the estimates are any costs associated with permits, reports or hearings required by regulatory agencies.

10.1.6 Expression of Costs

Investment costs for Level 1 treatment systems are expressed in mid-1978 dollars to construct base level facilities for each single product manufacturing subcategory at various production rates.

Similarly, operation, maintenance and amortization of the investment are expressed as base level annual costs for Level 1 and as incremental annual costs for Level 2 and above. Where a single product plant produces more than one waste stream requiring treatment, the respective investment and annual costs are the combined costs of all treatment.

Total annual costs per metric ton of product are shown in the summaries for each product subcategory.

Direct Investment Costs for Land and Facilities

Types of direct investment costs for waste treatment facilities and criteria for estimating major components of the model plants are contained in the following subsections:

Construction costs - Construction costs, including site preparation, grading, enclosures, buildings, foundations, earthwork, roads, paving and concrete.

The costs of constructing lagoons can vary widely, depending on local topographic and soil conditions. The required areas of lagoons and settling ponds and their consequent costs are developed as a function of volume (capacity). It is assumed that reasonably level sites are available, consisting of sandy loam with high clay content and no large rocks or rock formations.

It is assumed that two rectangular lagoons are furnished in parallel, with one common dike to permit alternate dewatering for sludge removal by the clamshell method. Using balanced cuts and fills, earth dikes with 2:1 slopes provide liquid depths from three to five meters. Earth moving costs are significantly affected by site conditions and quantities. To express these variations for a range of sizes at three depths, the cost of clearing, excavation, dewatering, compaction, finish grading, riprap and associated indirect expenses for earthen lagoon were plotted against liquid volume. Piping, valving and dike roads not included are added separately in the cost summaries. Lagoons are unlined unless the contents are highly pollutional or acidic. The liner material employed for impervious lagoons is Hypalon. The installed cost of the liner is $11.00 per square meter ($9.20 per square yard), which includes the trenching and backfilling necessary for anchoring the liner. In some subcategories, in place of Hypalon, clay lining has been used at a cost of $5.40 per square meter ($0.50 per square foot).

Costs of buildings may vary from $25.00 to $45.00 per square foot. For the purpose of this study, building cost is estimated at $377.00 per square meter ($35.00 per square foot).

Concrete construction for miscellaneous work varies from $260.00 to $785.00 per cubic meter ($200.00 to $600.00 per cubic yard). For foundations and flat slabs, concrete has been estimated at $395.00 per cubic meter ($300.00 per cubic yard) in place. Asphalt paving which has been used on lagoon dikes and for miscellaneous roads, is installed at a cost of $9.70 per square meter ($0.90 per square foot). A width of three meters is generally assumed.

Equipment costs - Depending upon the method of treatment, equipment for waste water treatment consists of a combination of items such as pumps, aerators, chemical feed systems, agitators, flocculant feed systems, tanks, clarifiers, thickeners, filters, etc. Cost tables for these items were developed from vendors' quotations on a range of sizes, capacities and motor horsepowers. Except for large size tanks and chemical storage bins, the cost represents packaged, factory-assembled units. Mechanical components are generally skid mounted, prepiped and prewired; and include associated pumps, meters and instrumentation. Critical equipment is assumed to be installed in a weather proof structure. Chemical storage, feeders and feedback equipment include such items as probes, instruments, controls, transmitters, valves, dust filters and accessories. Bulk chemical storage bins are designed to hold a standard bulk truck load, plus five days needs, between ordering and delivery. Critical pumps are furnished in duplicate and when clarifiers are used, the flow is split between two units, permitting one to be bypassed for repairs. Single units are used for small flows, batch treatment and intermittent service.

Installation cost - Installation is defined to include all services, activities, and miscellaneous material necessary to implement the described waste water treatment and control systems, including piping, fittings, and electrical work. Many factors can impact the cost of installing equipment modules. These include wage rates, manpower availability, whether the job is performed by outside contractors or regular employees, new construction versus modification of existing systems, and site-dependent conditions (e.g., the availability of sufficient electrical service). In these estimates, installation costs were chosen for each application, based upon average site conditions and taking into consideration the complexity of the system being installed. An appropriate cost is allowed for interconnecting piping, power circuits and controls.

Monitoring equipment - In this report, it is assumed that monitoring equipment will be installed at the treated effluent discharge point. It will consist of an indicating, integrating and recording type flow meter, pH meter with sensor and recorder, alarms and controls and an automatic sampler.

Land - Land availability and cost of land can vary significantly, depending upon geographical location, degree of urbanization and the nature of adjacent development. Land for waste treatment, and in some cases for inert solids disposal, is assumed to be contiguous with the production plant site and reasonably convenient to a water way which can receive permitted discharges of waste water. Where inert solids are retained at the plant site, enough land is included in the base level model plant investment cost to accept residual solids for a normal operating period of ten years at the same production rate for which the plant is sized.

For the purpose of this report, land for lagoons, treatment facilities and on-site residual waste disposal is valued at $30,000 per hectare ($12,000 per acre).

Investment costs for supporting services - Engineering design and inspection are typical services necessary to bring a project from a concept to an operating system. Such services broadly include laboratory and pilot plant work to establish design parameters, site surveys to fix elevations and plant layout, foundation and ground water investigations, and operating instructions; in addition to design plans, specifications and inspection during construction. These costs, which vary with job conditions, are often estimated as percentages of construction cost, with typical ranges as follows:

Preliminary survey and construction surveying	1 to 2%
Soils and ground water investigation	1 to 2%
Labortory and pilot process work	2 to 4%
Engineering design and specifications	7 to 12%
Inspection during construction	2 to 3%
Operation and maintenance manual	1 to 2%

From these totals of 14 percent to 25 percent, a mid-value of 20 percent of in-place construction (installed equipment and construction) costs has been used in this study to represent the engineering and design costs applied to model plant cost estimates.

The contractor's fee and contingency, usually expressed as a percentage of in-place construction costs, includes such general items as temporary utilities, small tools, dewatering, field office overhead and administrative expense. The contractor is entitled to a reasonable profit on his activities and to the cost of interest on capital tied up during construction. Although not all of the above costs will be incurred on every job, an additional 20 percent of the in-place construction costs has been used to cover related costs broadly described as contractor's fees, incidentals, overhead and contingencies.

Operation and Maintenance Costs

Annual operation and maintenace costs are described and calculated as follows:

Labor and supervision costs - Plant operations are assumed to be conducted 24-hours per day 350 days per year, with attendance for only part of each working day. For batch waste water treatments systems adjustment are made for the number of working days in a year. Personnel costs are based on an hourly rate of $20.00. This includes fringe benefits and an allocated portion of costs for management, administration and supervision.

Personnel are assigned for specific activities as required by the complexity of the system, usually 4 to 12 hours per day.

Energy costs - Energy (electricity) costs are based on the cost of $306.00 per horsepower operating 24 hours per day and 350 days per year. For batch processes, appropriate adjustments are made to suit the production schedule. The cost per horsepower

year is computed as follows:

$$Cy = 1.1\ (0.7457HP \times Hr \times Ckw)/(E \times P) \qquad (1)$$

where

Cy = Cost per year

HP = Total horsepower rating of motor (1 hp = 0.7457 kw)

E = Efficiency factor (0.9)

P = Power factor (1.00)

Hr = Annual operating hours (350 x 24 = 8400)

Ckw = Cost per kilowatt-hour of electricity ($0.040)

Note: The 1.1 factor in equation (1) represents allowance for incidental energy used such as lighting, etc.

It is assumed that no other forms of energy are used in the waste treatment system.

Chemicals - Prices for the chemicals were obtained from vendors and the Chemical Marketing Reporter. Unit costs of common chemicals delivered to the plant site are based on commercial grade of the strengths or active ingredient percentages as follows:

Hydrated Lime (Calcium Hyroxide)	Bulk	$ 80/metric ton
	Bag	$ 85/metric ton
Quick Lime	Bulk	$ 70/metric ton
Ground Limestone		$ 13.20/metric ton
Soda Ash (58% Bulk)		$ 85/metric ton
Caustic Soda (58% NaOH)		$200/metric ton
Sodium Sulfide (60-62%)		$435/metric ton
Sulfuric Acid		$ 75/metric ton
Hydrochloric Acid (32%)		$ 70/metric ton
Aluminum Sulfate (56% Alumina)		$250/metric ton
Flocculant (Polymer)		$2.00/kg

Sulfur Dioxide (Ton Containers)	$335/metric ton
Chlorine (ton Containers)	$220/metric ton
Sodium Bisulfide (72-74%)	$385/metric ton
Ferrous Sulfate	$ 70/metric ton
Diatomaceous Earth	$ 0.30/kg
Activated Carbon	$ 2.00/kg

Maintenance - The annual cost of maintenance is estimated as 10 percent of the investment cost, exluding land.

Taxes and insurance - An annual provision of three percent of the total investment cost has been included for taxes and insurance.

Residual waste disposal - Sludge disposal costs can vary widely. Chief cost determinants include the amount and type of waste, and the choice of either on-site disposal or contract hauling which depends on the size of the disposal operation and transport distances. Off-site hauling and disposal costs are taken as $13.00 per cubic meter ($10.00 per cubic yard) for bulk hauling, with appropriate increases for small quantities in steel containers. For on-site disposal from lagoons, a clamshell at $600.00 and frontend loader at $300.00 per disposal day are used. For very large sludge quantities, lower unit costs have been assumed. The computed sludge quantities are spread on land valued at $12,000 per acre.

Monitoring, analysis and reporting - The manpower requirements covered by the annual labor and supervision costs include those activities associated with the operation and maintenance of monitoring instruments, recorders, and automatic samplers as well as the taking of periodic grab samples. Additional costs for analytical laboratory services have been estimated for each subcategory assuming that sampling takes place three times a week at the point of discharge and that an analytical cost of $20.00 per constituent is incurred. Approximately 10 percent of the total analytical cost has been added for quality control and water supply samples. Unless otherwise stated, continuous discharge is assumed and the analytical costs associated with compliance monitoring at the BPT level are based on the determination of four constituents. At the advanced (BAT) levels, the determination of six constituents is assumed. A reporting cost of $1,500 per year is added for clerical support. Monitoring costs for periodic batch treatments are reduced in proportion to the number of days per year when discharges occur.

Amortization

Annual depreciation and capital costs are computed as follows:

$$CA = B[r(1+r)^n]/[(1+r)^n - 1] \qquad (2)$$

where

CA = Annual cost

B = Initial amount invested excluding cost of land

r = Annual interest rate (assumed 10%)

n = Useful life in years

The multiplier for B in equation (2) is often referred to as the capital recovery factor, and is 0.1627 for the assumed overall useful life of 10 years. No residual or salvage value is assumed.

Items not Included in Cost Estimates

In some subcategories, a portion of the waste water is returned to process from an intermediate treatment step. In these cases, the costs of return piping and pumping are considered as water development and not as waste treatment. Costs for subsequent treatment are based on the remaining flow after diversion of the return-to-process flows.

Although specific plants may encounter extremes of climate, flood hazard and availability of water, the costs of model plants have been estimated for average conditions of temperature, drainage and natural resources. It is assumed that any necessary site drainage, roads, water development, security, environmental studies and permit costs are already included in production facilities costs. Therefore, the model costs are only for facilities, supplies and services directly related to the treatment and disposal of waterborne wastes, including land needed for treatment and on-site sludge disposal. Air pollution control equipment is not included, except for dust collectors associated with treatment, chemical transfer and feeding. Raw wastes from various sources are assumed to be delivered to the treatment facility at sufficient head to fill the influent equalization basin, and final effluent is discharged by gravity. Costs of pumps, pipes lines etc., necessary to deliver raw waste water to the treatment plant or to deliver the treated effluent to the point of discharge are not included in the cost estimates.

Since the treatment models are designed to serve single product manufacturing plants, no emergency holding basins or

internal bypasses are provided. Any such necessary facilities are more appropriately furnished as part of a combined waste treatment system serving several product lines.

10.2 COST ESTIMATES FOR EACH SUBCATEGORY

Estimated costs for the waste water treatment plants for the different annual productions and at various levels of treatment are calculated in terms of total annual costs. The total annual cost is the summation of the annual amortization of the investment costs and the annual operation and maintenance costs.

The types of costs shown for each model plant are:

(a) Investment

(b) Annual operation and maintenance

(c) Annual amortization of investment costs (excluding land)

The total annual costs per metric ton of product have been calculated.

For the purpose of the cost estimate, the first level of treatment represents the base cost of the treatment system (BPT). The other levels (second, third, etc.) represent the incremental cost above the base cost. The actual additional costs a plant would incur in implementing the described treatment processes depend on current treatment practices, and to some extent on the availability of land.

In some cases land for economical on-site sludge disposal for a ten year period has been provided in the BPT model plant costs. Since land cost is not amortized, its value appears in the initial investment cost but not in the total annual costs. Where land is a major factor in the BPT estimated costs, its significance will be mentioned in the separate reviews of each subcategory.

SECTION 11

CHLOR-ALKALI INDUSTRY

11.1 ASSESSMENT OF THE WATER POLLUTION POTENTIAL - MERCURY CELL

11.1.1 Industry Profile and Analytical Results

Chlorine, hydrogen and caustic soda (NaOH) or caustic potash (KOH) are produced together by electrolysis of brine. Chlorine is used in pulp and paper industry, plastics, water treatment, as an input in the manufacture of vinyl chloride, chlorinated ethers, and other inorganic and organic chemicals. About two-thirds of the production is for captive uses.

Chlorine - Mercury Cell Plants

The industrial profile data for this industry is given in Table 11-1, and the existing regulations in Table 11-2.

The priority pollutants found in siginficant concentrations in the raw waste during sampling at Chlorine - Mercury Cell Plants were as follows:

	Maximum Concentration Observed ug/l	
Pollutant	Screening	Verification (5 Plants)
Mercury	150	27600
Copper	350	1480
Chromium	7.7	235
Antimony	<200	950
Arsenic	< 10	400
Cadmium	0.4	787
Lead	1	1900
Nickel	<100	2450
Zinc	230	34830
Thallium	<250	650
Silver	0.6	1455

A summary of daily and unit product raw waste loads for all

TABLE 11-1 - SUBCATEGORY PROFILE DATA SUMMARY

SUBCATEGORY	CHLORINE MERCURY CELL
Total subcategory capacity rate	3,545,000 kkg/year
Total subcategory production rate	2,750,000 kkg/year
Number of plants in this subcategory	32
308 Data on file for	15
With total capacity of	1,280,600 kkg/year
With total production of	1,090,000 kkg/year
Representing capacity	36 percent
Representing production	40 percent
Plant production range:	
Minimum	19,100 kkg/year
Maximum	198,000 kkg/year
Average production	77,900 kkg/year
Median production	70,400 kkg/year
Average capacity utilization	75 percent
Plant age range:	
Minimum	2 years
Maximum	26 years
Wastewater flow range:	
Minimum	4 cubic meters/day
Maximum	2,100 cubic meters/day
Volume per unit product:	
Minimum	< 1 cubic meters/kkg
Maximum	11 cubic meters/kkg

Sources of data are Stanford Research Institute, Directory of Chemical Producers, U.S.A., 1977, U.S. Department of Commerce, Current Industrial Reports, December 1977; Energy and Environmental Analysis, Inc.; Draft Report, "Preliminary Economic Assessment of Effluent Limitations in the Inorganic Chemical Industry."

TABLE 11-2 - EXISTING REGULATIONS - EFFLUENT LIMITATION GUIDELINES

SUBCATEGORY Chlorine and Sodium or Potassium Hydroxide

SUBPART F (40CFR 415.60, 3/12/74)

		STANDARDS					
		BPCTCA		BATEA*		NSPS	
Product Process	Parameters	Max.[1] kg/kkg (mg/l)	Avg.[2] k/kkg (mg/l)	Max. k/kkg (mg/l)	Avg. k/kkg (mg/l)	Max. k/kkg (mg/l)	Avg. k/kkg (mg/l)
Mercury Cell Process	TSS	0.64	0.32	No discharge of pwwp[3]		0.64	0.32
	Hg	0.00028	0.00014	No discharge of pwwp		0.00014	0.00007
Diaphragm Cell Process	TSS	0.64	0.32	No discharge of pwwp		0.64	0.32
	Pb	0.005	0.0025	No discharge of pwwp		0.00008	0.00004

* Section 415.63 was remanded and is presently reserved (41 FR 51601, November 23, 1976).

[1] Max. = Maximum of any one day.

[2] Avg. = Average of daily values for thirty consecutive days shall not exceed.

[3] pwwp = Process wastewater pollutants.

plants sampled can be found in Table 11-3. Individual plant raw waste loads per unit product (units kg/kkg) found in sampling can be found in Table 11-4.

Based on the total annual production of this subcategory and the average waste load generated per unit product, the estimated total priority pollutant raw waste loads generated each year for this subcategory are as follows:

Pollutant	Waste Load (kg/year)
Mercury	44000
Copper	910
Chromium	250
Antimony	1200
Arsenic	830
Cadmium	140
Lead	880
Nickel	720
Zinc	6300
Thallium	830
Silver	610

11.1.2 Process Waste Sources and Waste Water Treatment Data

General Process Description

Currently almost all of the caustic soda and 95 percent of all the chlorine produced in the United States is made by the electrolysis of sodium or potassium chloride. Sodium chloride is obtained by mining underground deposits or from the evaporation of brine or sea water. Two types of cells are used for the production of chlorine and caustic--mercury and diaphragm cells. Mercury cells account for approximately 30 percent of the production while the diaphragm cell accounts for 65 percent. The Downs cell is another electrolytic process for producing chlorine and sodium from fused salt. However, the amount of chlorine produced by this process is relatively small. Since the predominant method of making chlorine and by-product caustic is by the use of mercury and diaphragm cells, this study of the chlor-alkali subcategory is restricted to these two processes. Because of the difference in cell design and the quality and quantity of waste water produced, the chlorine subcategory has been subclassified into two divisions; the mercury cell process and the diaphragm cell process (See Section 4). Both the processes are described later using sodium chloride as the starting material. The same description holds true when potassium chloride is the starting material, but with one difference - the by-product produced in the latter case is

TABLE 11-3. SUMMARY OF RAW WASTE LOADINGS FOUND IN SCREENING AND VERIFICATION SAMPLING

SUBCATEGORY CHLORINE-MERCURY CELL

Pollutant	Loadings						
	kg/day			kg/kkg			No. of Plants Averaged
	Minimum	Average	Maximum	Minimum	Average	Maximum	
Priority							
Antimony, Sb	0.0059	0.15	0.29	0.00001	0.00045	0.00074	3
Arsenic, As	0.00045	0.086	0.27	0.000001	0.0003	0.01	5
Cadmium, Cd	0.00032	0.0091	0.025	0.0000008	0.00005	0.0002	5
Chromium, Cr	0.0014	0.028	0.094	0.000004	0.00009	0.0004	6
Copper, Cu	0.029	0.11	0.020	0.0001	0.00033	0.0006	6
Lead, Pb	0.034	0.068	0.13	0.000089	0.00032	0.0007	5
Mercury, Hg	0.086	2.84	6.71	0.0002	0.016	0.063	6
Nickel, Ni	0.018	0.046	0.072	0.00003	0.00026	0.0007	4
Silver, Ag	0.00036	0.058	0.22	0.00001	0.00022	0.0008	4
Thallium, Tl	0.0027	0.071	0.14	0.00002	0.0003	0.001	4
Zinc, Zn	0.11	0.42	1.10	0.0003	0.0023	0.01	6
Conventional							
TSS	6.76	307	1199	0.018	2.19	10.8	

TABLE 11-4. PRIORITY POLLUTANT RAW WASTE LOADS (in kg/kkg of Product)

SUBCATEGORY	CHLORINE - MERCURY CELL					
POLLUTANT	PLANT *					
	#299	#167	#106	#747	#317	#299
Mercury, Hg	0.0002	0.013	0.006	0.0044	0.063	0.008
Chromium, Cr	0.000004	0.0004	0.00001	0.00004	0.000048	0.00009
Thallium, Tl		0.0001	0.0006		0.00014	0.00029
Arsenic, As		0.001	0.000002	0.000001	0.0003	0.0003
Nickel, Ni		0.0001	0.0002	0.00003	0.0007	
Cadmium, Cd	0.0000008		0.00004	0.00001	0.0002	0.000004
Copper, Cu	0.0005	0.0001	0.0001	0.0002	0.0006	0.00047
Lead, Pb		0.0002	0.0005	0.0001	0.0007	0.000089
Zinc, Zn	0.0003	0.0006	0.001	0.0005	0.010	0.0015
Antimony, Sb			0.0006	0.00001		0.00074
Silver, Ag	0.00001		0.0008	0.00002	0.00005	

*Does not include brine muds except for Plant #317.

caustic potash (KOH) instead of caustic soda (NaOH).

Mercury cell process - In the case of mercury cells, the 26 percent brine is reduced to only 22 percent NaCl for each pass through the mercury cells. The spent brine is acidified with HCl to pH3 and then blown with air or steam for dechlorination. The residual traces of chlorine and chlorate ions are decomposed by treatment with sodium bisulfite, and the brine is saturated by the addition of salt for re-use.

As in the diaphragm cell process, the brine is purified by the addition of caustic soda and sodium hydroxide to eliminate or reduce the calcium, magnesium and iron impurities. The precipitated waste is known as the brine mud and is similar to the one produced from the diaphragm cell except that it contains small amounts of ionic and metallic mercury from the re-cycled brine. The precipitate is removed by filtration or clarification. The final pH of the purified saturated brine solution is adjusted to 3 to 4 by the addition of HCl. It is then fed to the mercury cells.

The mercury cell, in general, consists of two sections; the electrolyzer and the decomposer or denuder. The electrolyzer is an elongated steel trough that is inclined slighty from the horizontal and the mercury flows in a thin layer at the bottom. This forms the cathode of the cell, and the brine flows concurrently on top of the mercury. Parallel graphite or metal anode plates are suspended from the cover of the cell. Electric current flowing through the cell decomposes the brine, liberating chlorine at the anode and sodium metal at the cathode. The metallic sodium forms an amalgam with mercury.

$$2\ NaCl(aq) + Hg = Cl2(aq) + 2\ Na(Hg) \qquad (2)$$

The amalgam from the electrolyzer flows to the denuder. The spent brine is recycled to the brine purification process. In the denuder, the amalgam becomes an anode to a short-circuited iron or graphite cathode. Deionized water is added to the denuder which reacts with the amalgam to form hydrogen and caustic. In modern mercury cells, the denuder or decomposer is a horizontal or vertical laid graphite-packed bed. The water and the amalgam flow countercurrently. The mercury is returned to the electrolyzer. The caustic formed has a concentration of 50 percent NaOH. Some of the impurities present in the caustic are removed or reduced by the addition of certain chemicals, and the caustic is then filtered. It is, in most cases, sent to the storage tank or is evaporated if 73 percent NaOH is the final required concentration. The hydrogen gas is cooled by refrigeration to remove water vapor and mercury. The processing of chlorine gas is similar to the one practiced for diaphragm

cell. Figure 11-1 is a flow diagram of chlorine/caustic production using mercury cells.

Water Use and Waste Source Inventories

Water usage - The water uses common to both mercury and diaphragm cells include noncontact cooling, cell washings, tail gas scrubbing, equipment maintenance and area washdown. Noncontact cooling water is used in cooling brine, caustic, chlorine, rectifiers and compressors. Large amounts of water are also introduced into the process through the salt solution.

One water application unique to the mercury cell process is in the decomposition of mercury-sodium amalgam to form caustic in the denuder. In mercury cell plants, the quantity of water usage was found to range from 7.6 to 204 cubic meters per metric ton of chlorine produced with noncontact cooling comprising approximately 70 percent of the total.

Waste sources - Some of the waste sources produced during the manufacture of chlorine and caustic by diaphragm and mercury cells are similar with the notable exception of the presence of mercury in the waste waters from mercury cells and asbestos fibers in the waste waters from the diaphragm cell plants. Following is a brief description of the common waste water stream, followed by the individual streams specific to mercury and diaphragm cells.

A. Common Wastes (Mercury Cell and Diaphragm Cell)

Brine mud - This is the waste produced during the purification of brine using soda ash and small amounts of caustic soda before it is introduced into the cell for electrolysis. The metals commonly removed during purification are magnesium, calcium, iron and other trace metals such as titanium, molybdenum, chromium, vanadium and tungsten. Calcium and iron are removed as carbonates and magnesium and small amounts of trace metals are removed as hydroxides. Brine mud is the major portion of the waste solids produced from the process. The solids content of the stream varies from 2 to 20 percent and amount in volume to 0.04 to 1.5 cubic meters per ton of chlorine produced. The waste is either sent to a pond or filtered. The overflow from the pond, or the filtrate, is recycled to the process as makeup water for the brine. In the mercury cell process, only 16 percent of the NaCl solution is decomposed in the cell and the unconverted brine is recycled to the purification unit after dechlorination. This recycled brine is contaminated with mercury and, therefore, the resulting brine mud contains small amounts of mercury.

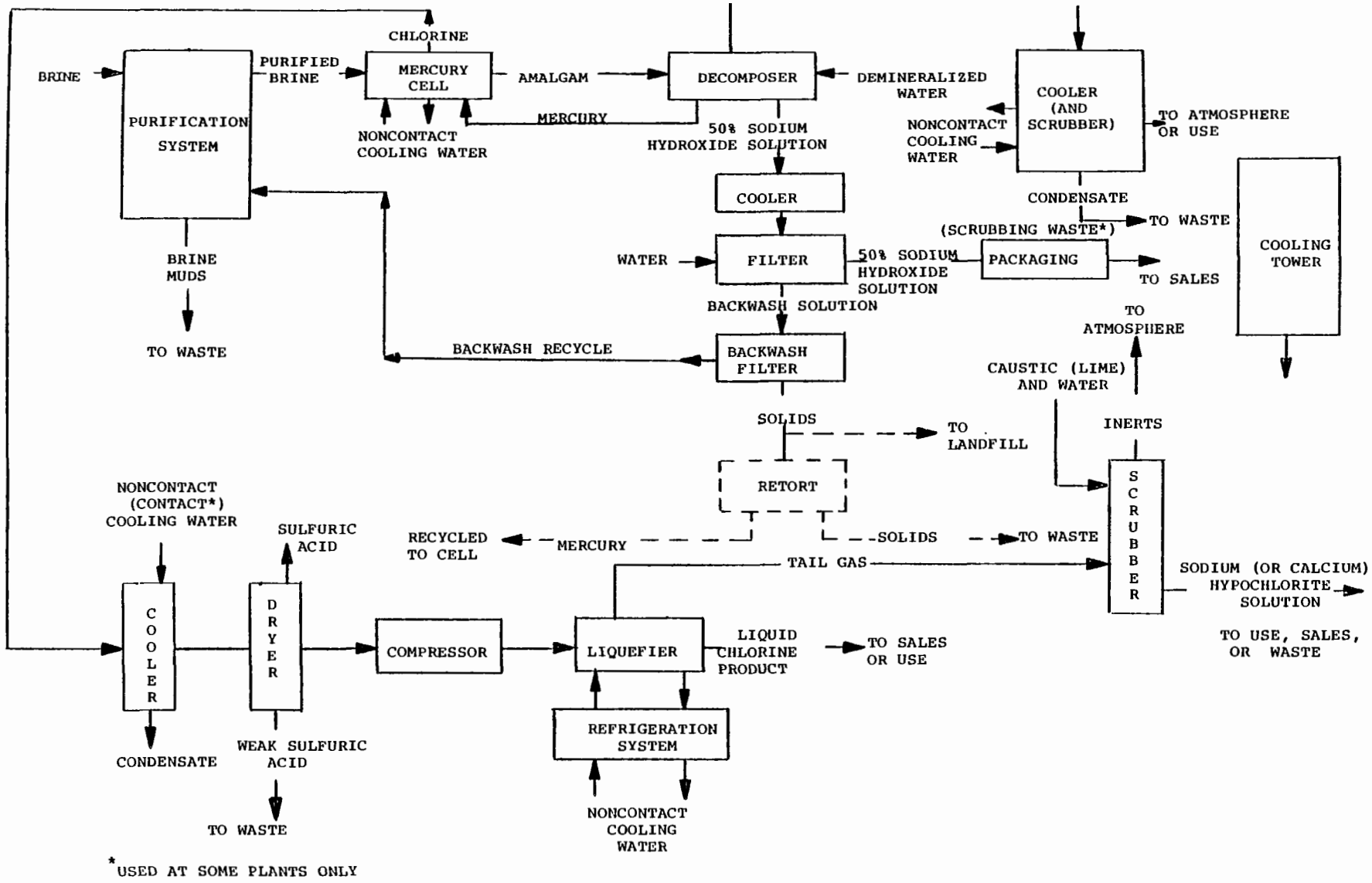

Figure 11-1. General process diagram for production of chlorine/caustic by mercury cells.

Cell Room Wastes - This is another common waste stream produced from both diaphragm and mercury cell but the volume and characteristics are different in each case. The major components of this stream include leaks, spills, and cell wash waters. The amount varies from plant to plant and depends largely on housekeeping practices. The amount of cell room waste generated per metric ton of chlorine, as a general rule, is higher for diaphragm cell plants, and the waste water from the washing and rebuilding of the cathode contains asbestos fibers, dissolved chlorine, and brine solution. Every diaphragm cell is washed at regular intervals with the washing period varying from plant to plant. In mercury cell plants, the cell room wastes contain mercury, dissolved hydrogen, chlorine, and some sodium chloride.

Cell room waste constitutes one of the major streams that has to be treated for mercury. If graphite anodes are used in either the mercury or diaphragm cells, the cell room wastes contain lead and chlorinated organic compounds in addition to the pollutants already mentioned. The majority of plants have converted the cells from graphite anodes to metal anodes and few plants are still operating with graphite anodes.

Chlorine Condensate - Condensation from the cell gas is contaminated with chlorine. At some plants, the condensates are recycled to the process after chlorine recovery. Both contact and noncontact water is used for chlorine cooling and for removal of water vapor and so the amount of waste water varies from plant to plant. When graphite anodes are used, chlorinated hydrocarbons, lead, and other impurities carried with the chlorine condenses in the first-stage cooler. The chlorinated organic compounds that have been detected when graphite anodes are used are: chloroform, methylene chloride, hexachlorobenzene, hexachloroethane and hexachlorobutadiene (3).

Spent Sulfuric Acid - Concentrated sulfuric acid is used to remove the residual water from the Cl_2 gas after the first stage of cooling. In most cases, sulfuric acid is used until a constant concentration of 50-70 percent is reached. The spent acid might contain mercury, asbestos fibers, or chlorinated hydrocarbons (depending on the type of cell) in addition to chlorine. The volume of waste acid is typically of the order of 0.01 cubic meters per metric ton of chlorine.

Tail Gas Scrubber Liquid -The uncondensed chlorine gas from the liquefaction stage, containing some air and other gases, is scrubbed with sodium/calcium hydroxide to form sodium/calcium hypochlorite. When the equipment is purged for maintenance, the "sniff" gas, or tail gas, is absorbed in calcium or sodium hydroxide, producing the corresponding hypochlorites. The amount of tail gas scrubber water varies from 0.04 to 0.58 cubic meters per metric ton of chloride for both diaphragm and mercury cell plants, as shown in Table 11-5.

TABLE 11-5. TAIL GAS SCRUBBER FLOW DATA FOR CHLORINE/CAUSTIC SUBCATEGORY

Plant	Type of Cell Used	Tail Gas Scrubber Flow m^3/kkg of Cl_2
#858	Diaphragm	0.16
#967	Diaphragm	0.28
#967	Diaphragm	0.104
#317	Mercury	0.045
#299	Mercury	0.108
#674	Mercury	0.578

Caustic Filter Washdown - The 50 percent caustic produced from both mercury and diaphragm cells is treated with chemicals and filtered to remove salt and other impurities. The filters are back-washed periodically as needed, the waste water volume is variable, and usually contains small amounts of mercury or asbestos fibers in addition to the salt.

B. Process Specific Wastes

Condenser Drainage - In mercury cells, the hydrogen produced is cooled in surface condensers to remove mercury and water that is carried over with the gas. The waste water is either sent to the waste water treatment facility or sent to the mercury recovery facility. After mercury recovery, the water may be discharged to the treatment facility or returned to the denuder after deionization. Information on the volume of this waste stream is not available.

Control and Treatment Practices

Mercury Cell Plants Visited and Sampled

Plant #299 was visited in the screening and verification phase of the program. The mercury-contaminated waste streams include outlet end-box wash water, spills and cleanup water, brine mud saturator sludge, and pump seals waste water. The combined waste water is sent to settling ponds where the suspended solids are separated. The effluent from the ponds is treated with sodium sulfide and the pH adjusted. The reactor solution is filtered in a filter press and the filtrate passed through activated carbon before discharge. Figure 11-2 gives the general process diagram and shows the streams sampled. Table 11-6 gives the unit flow data and the important pollutant emissions.

Three more plants (#747, #167, and #317) producing chlorine/caustic by mercury cells were visited and waste water sampled in the verification program.

At Plant #747, the brine dechlorination system has been converted from barometric condensers to a steam ejector system. The conversion resulted in increased chlorine recovery and reduced contact waste water. By providing settling and secondary filter facilities, the brine filter backwash has been eliminated. The tail gas scrubber liquid is offered for sale and if not marketed, is decomposed. The mercury bearing waste waters are collected and treated with Na_2S. The reacted solution is filtered and the filtered solids are retorted for mercury recovery. The filtrate is mixed with the other process waste waters and the pH adjusted before discharge. The flow diagram of

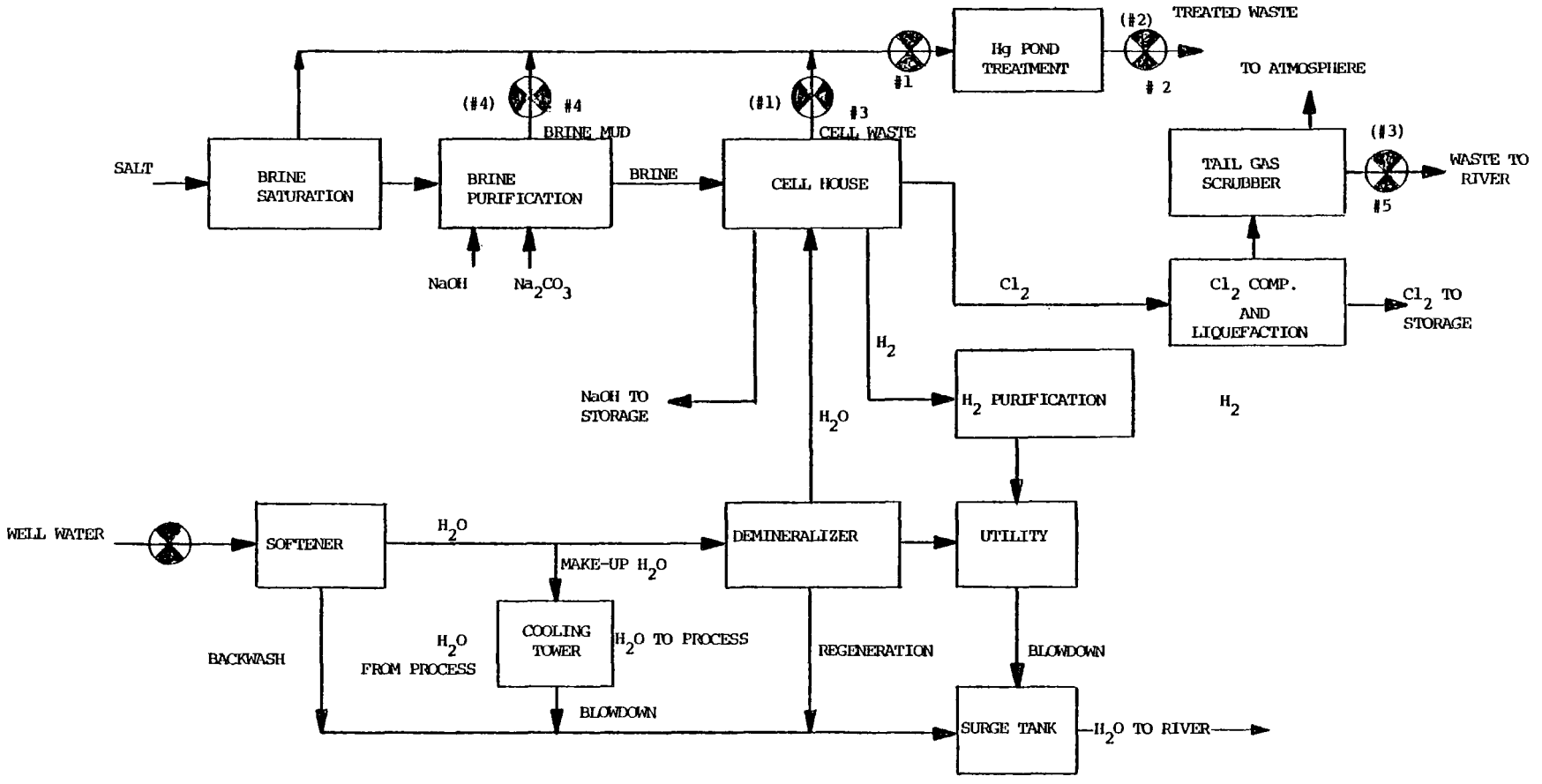

Waste streams sampled.
Numbers in ( ) were sampled in screening, others during verification.

Figure 11-2. General process flow diagram at Plant #299 showing the sampling points.
Chlorine/Caustic (Mercury Cell) Manufacture

TABLE 11-6. FLOW AND POLLUTANT CONCENTRATION DATA OF THE SAMPLED WASTE STREAMS FOR PLANT# 299 PRODUCING CHLORINE BY MERCURY CELLS

Stream No.	Stream Description	Unit Flow m^3/kkg of Cl_2	TSS kg/kkg of Cl_2	Mercury kg/kkg of Cl_2	Lead kg/kkg of Cl_2
1	Cell Waste	1.416	0.016	0.0002	0.000001
2	Mercury Treatment Effluent	1.475	0.007	0.00004	0.000006
3	Tail Gas Scrubber	0.128	NA	NA	<0.000006
4	Brine Mud	NA	NA	NA	NA
Verification Phase					
1	Inlet to Mercury Treatment	1.475	0.276	0.00831	<0.00008
2	Mercury Treatment Effluent	1.475	0.026	0.0003	<0.00007
3	Cell Waste	1.416	0.173	0.0145	0.0002
4	Brine Mud	NA	12874*	0.545*	0.668*
5	Tail Gas Scrubber	0.128	0.022	0.00002	0.00001

NA = Not Available

*mg/l

the manufacturing process, including the waste water treatment facility, is given in Figure 11-3. Table 11-7 gives the flow data for the sampled streams.

At Plant #167, the waste water streams, consisting of filter backwash, cell room wash, rain water runoff, and leaks and spills, are combined and treated for mercury removal. The water is sent to a holding lagoon and the overflow is reduced by reaction with ferrous chloride, which precipitates mercury. The reacted solution is sent to a clarifier and the underflow from the clarifier is disposed of in a landfill. The overflow is filtered and the filtrate is passed through activated carbon and an ion exchange column prior to discharge to a lagoon. The effluent from the lagoon is pH adjusted and discharged. Figure 11-4 shows the simplified process flow diagram for Plant #167, including the sampling locations. Table 11-7 gives the flow data and pollutant emissions for the sampled streams.

At Plant #317, the brine purification mud is mixed with spent sulfuric acid and sodium hypochlorite solution. The treatment removes mercury from the mud and transfers it to the solution. The solution is filtered and the solids landfilled. The filtrate is mixed with other mercury-contaminated waste waters, which includes the brine purge, cell room liquid wastes and plant area wash water. This is then reacted with sodium hydrosulfide to precipitate the mercury as mercury sulfide and then filtered. The solids are sent to a mercury recovery unit and the filtrate is sent to a holding tank. The effluent from the holding tank is mixed with de-ionizer waste and noncontact cooling water before discharge. The process flow diagram showing the waste streams sampled are given in Figure 11-5. Table 11-7 is a summary of flow data and pollutant emissions for the sampled streams.

Treatment Practices-Mercury Cell - Treatment practices at other mercury cell chlorine producing plants not visited and sampled are discussed in the next few pages.

At Plant #261, the cell waste water is filtered and the filter cake and other asbestos solids are disposed of at an off-site landfill after being placed in plastic bags which, in turn, are packed in drums. Brine purificiation muds at this facility are utilized for their alkalinity on-site and then they are settled prior to discharge of the supernatant. Spent sulfuric acid is used for neutralization of the waste waters. Dechlorination of the drying acid by reaction with sodium bisulfite is planned in the near future.

At Plant #589, the waste water going to the mercury treatment system consists of cell room washdown, brine filter backwash, leaks, spills, cleanup water, and hydrogen cooling condensate. The waste waters are reacted with hydrochloric acid

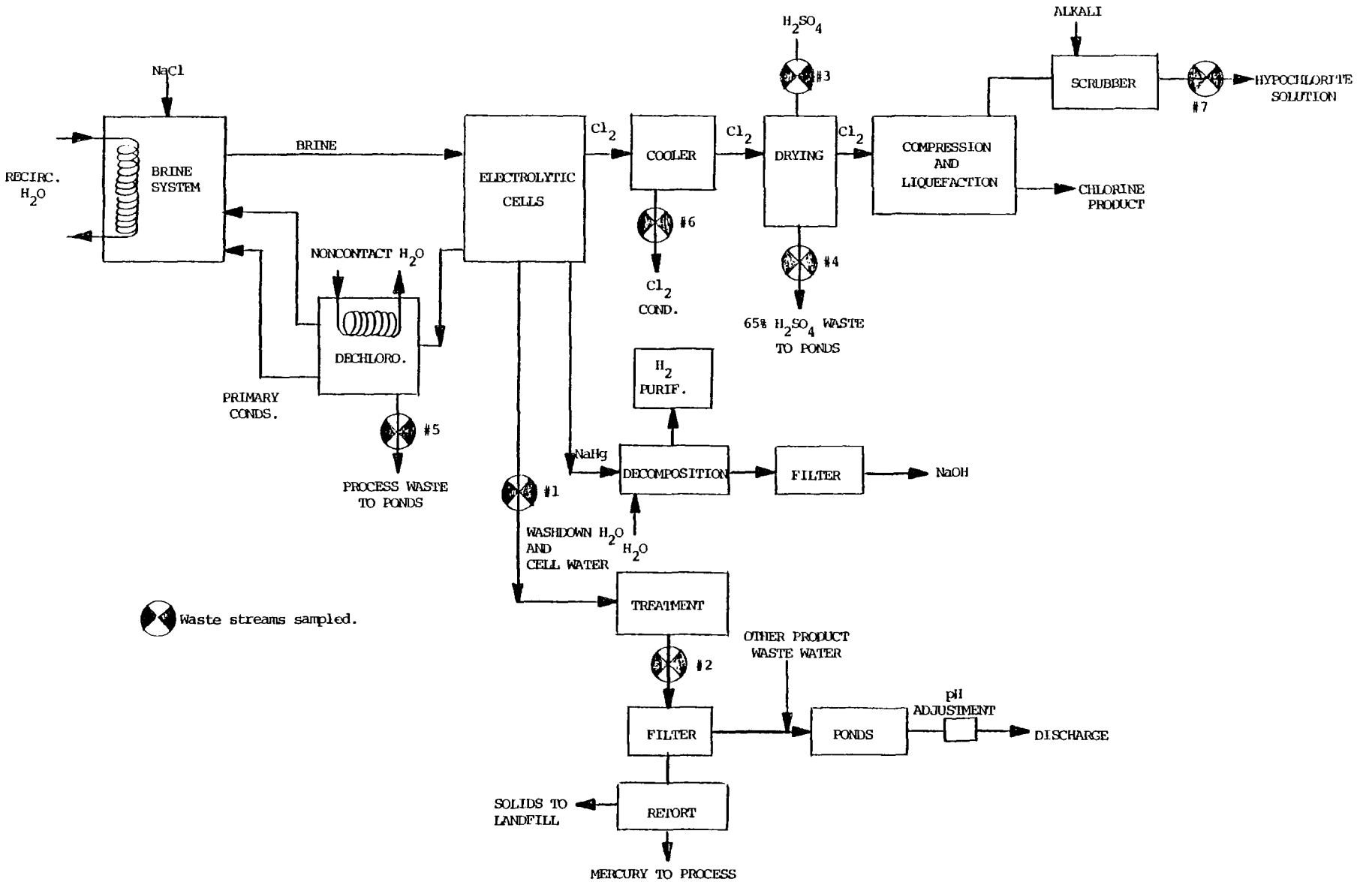

Figure II-3. General process flow diagram at Plant #747 showing the sampling points. Chlorine/Caustic (Mercury Cell) Manufacture

TABLE 11-7. FLOW AND POLLUTANT CONCENTRATION DATA OF THE SAMPLED WASTE STREAMS FOR PLANTS #747, #167 AND #317 PRODUCING CHLORINE BY MERCURY CELLS

Plant	Sampled Stream No.	Stream Description	Flow m^3/kkg of Cl_2	Pb Load kg/kkg of Cl_2	SS Load kg/kkg of Cl_2	Hg Load kg/kkg of Cl_2
#747	1	Cell Waste	0.23	7.3×10^{-5}	0.16	4.3×10^{-3}
	2	Treated Waste	0.23	1.7×10^{-5}	0.014	2.3×10^{-5}
	3	Input Cl_2 Drying Tower	0.15	4.1×10^{-4}	NA	3.5×10^{-6}
	4	Output Cl_2 Drying Tower	0.24	1.4×10^{-5}	NA	7.2×10^{-7}
	5	Dechloro System	0.43	4.3×10^{-6}	0.0037	1.5×10^{-5}
	6	Cl_2 Condensate	0.0067	8.7×10^{-7}	2.7×10^{-5}	1.8×10^{-6}
	7	Tail Gas-Hypo	0.022	3.1×10^{-5}	NA	8.0×10^{-7}
#167	5	All Chlorine Wastes	3.35	2.4×10^{-4}	1.89	1.3×10^{-2}
	6	Cell Wash	0.0093	2.6×10^{-6}	5.7×10^{-4}	6.7×10^{-6}
	7	Brine Process Water	1.78	1.8×10^{-5}	7.1×10^{-3}	9.0×10^{-6}
	8	Treated Chlorine Waste	5.58	6.5×10^{-4}	1.3×10^{-2}	1.8×10^{-3}
	9	Brine Mud	0.67	6.96×10^{-3}	3.99	8.7×10^{-5}
#317	1	Cell Waste	0.29	3.98×10^{-3}	0.013	1.4×10^{-5}
	2	Brine Mud Filtrate	0.54	6.3×10^{-5}	0.28	1.9×10^{-2}
	3	Tank Car Wash	0.11	1.1×10^{-5}	1.98×10^{-3}	3.6×10^{-6}
	4	Collection Tank (H2+3)	0.41	2.8×10^{-2}	8.67	5.6×10^{-4}
	5	Treated Effluent	0.41	6.8×10^{-5}	4.4×10^{-2}	4.3×10^{-5}
	6	Deionizer Effluent	0.29	3.8×10^{-6}	5.2×10^{-3}	2.9×10^{-7}
	7	N-C Cooling Water	135	1.4×10^{-3}	2.16	1.4×10^{-4}
	8	Final Effluent	136	3.2×10^{-3}	2.45	3.6×10^{-4}

NA = Not Analyzed

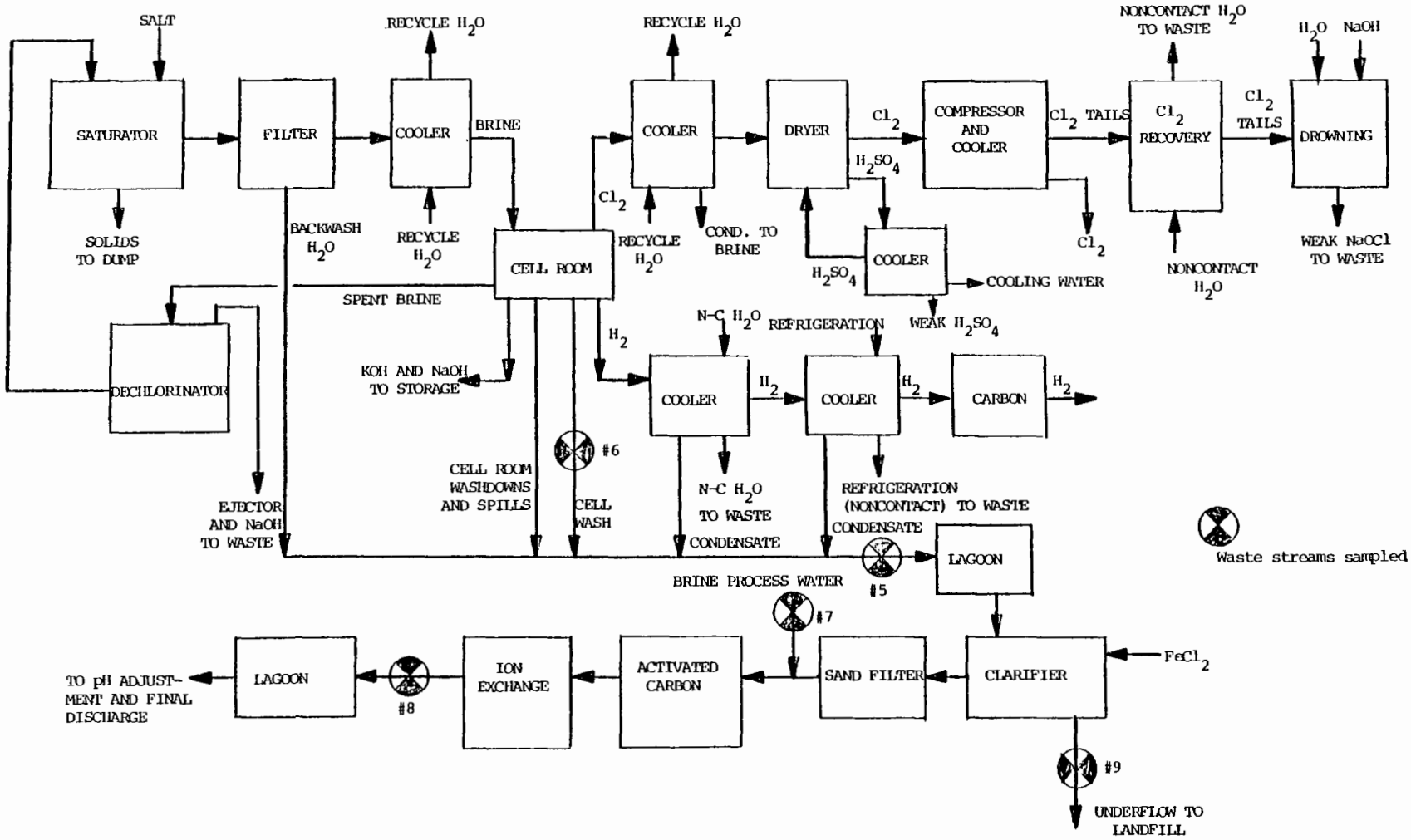

Figure 11-4. General process flow diagram at Plant #167 showing the sampling points. Chlorine/Caustic (Mercury Cell) Manufacture

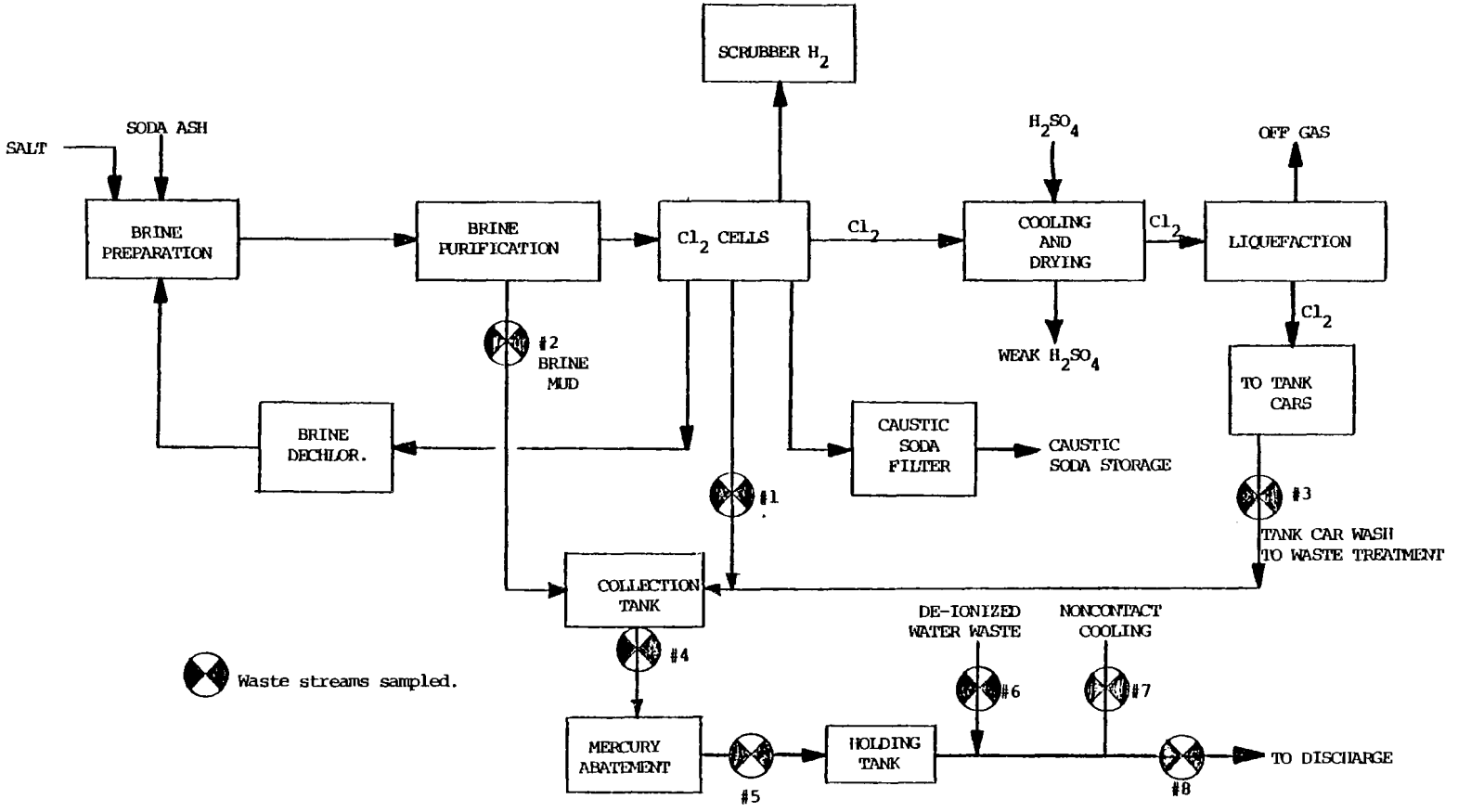

Figure 11-5. General process flow diagram at Plant #317 showing the sampling points.
Chlorine/Caustic (Mercury Cell) Manufacture

and sodium bisulfide and then sent to a settling basin where mercury sulfide precipitates. The overflow is passed through a series of effluent filters before discharge.

At Plant #343, the cell room wash water, brine purification sludge, and chlorine cooling condensate are combined and sent to a pond. The suspended solids settle in the pond and are dredged out once a year. The dredged sludge is "Chem Fixed" and disposed of in an appropriate landfill. The overflow from the pond is reacted with Na2S and the reacted solution is sent to a clarifier. The clarifier underflow, consisting mainly of mercury sulfide, is returned to the pond. The clarifier overflow is discharged.

All contact waste water at Plant #907 is treated for mercury removal in a patented process involving reduction of mercury to the metallic state by use of sodium borohydrate. All contaminated wooden flooring in the cell room has been removed and replaced with fiberglass gratings to reduce the amount of mercury in the effluent treatment system and for better waste control. Molecular sieves have been installed on cell end boxes to reduce the mercury content in the air vented from the cells. The treatment not only cleans the air but is also believed to reduce mercury in the plant area runoff.

In the treatment system, the mercury-contaminated waste water is reacted with sodium borohydride to reduce dissolved mercury to the metallic form. The reacted solution is filtered prior to delivery to one of the banks of three columns packed with anthracite coal. After passing through three absorption columns in series, the treated waste water is delivered to large holding tanks, from which it may be discharged or returned to treatment, depending on its mercury content. Filter cake, resulting from the filtration of the waste prior to the coal absorption step, is retorted for mercury recovery.

Waste solids at this facility, including mercury treatment sludges and brine muds, are deposited in an on-site disposal area. Chlorine discharges are essentially eliminated by three significant practices: the chlorine condensate is collected and returned to the brine system, tail gas scrubbing effluents are used in the manufacture of another product, and spent sulfuric acid from chlorine drying is dechlorinated in an air stripper and shipped off-site for the manufacture of another product. Gases from the air stripper are returned to the chlorine purification header.

At Plant #324, the barometric condenser on the brine dechlorinator was replaced with an indirect cooler, resulting in a reduction of chlorinated waste water. The tail gas scrubber effluent is used for the manufacture of another product, and the brine muds are sent to a pond. Small amounts of mercury, when

detected in the brine mud, are leached with water and treated with other mercury-contaminated waste waters which include the cell room wash water, caustic filter backwash, and brine leaks. The combined waste water is sent to a sump and then mixed with hydrogen processing waste water before introduction into a second sump. The waste water from the second sump is reacted with sulfuric acid, sodium boronydride, and sodium sulfide. The reacted solution is filtered. The filtrate is pH adjusted and the cake slurry is sent to a brine recovery sump. The underflow from the sump is sent to a pond and the overflow recycled to the process.

The mercury-bearing waste waters are combined and sent to the treatment facility. The streams sent to the treatment facility include the caustic filter backwash, cell outlet end-box wash water, spills and cleanup, clarifier sludge, saturation sludge, and pump seals. The waste waters are sent to the settling pond where the suspended solids are removed. The overflow from the pond is reacted with NaHS, pH adjusted, and then filtered. The filtrate passes through an activated carbon column before discharge. The depleted tail gas scrubber liquor is discharged at this plant without treatment.

At Plant #385, the brine mud sludge is sent to a retention pond where it accumulates. All process contact waste water is collected in an unlined pond where it is treated and the treated effluent is used as the scrubber liquid for tail gases. The spent scrubber solution is sent to an adjacent paper plant for use.

At Plant #416, the cell room wastes are used for bleach manufacture. The waste water streams from the chlorine/caustic plant are sent to an adjacent paper company.

At Plant #784, the waste water, consisting of KCl brine filter backwash and area washdown and spills, is sent to a basin. The basin equalizes the flow and the overflow is treated with sulfuric acid prior to reaction with NaHS and clarification. The clarifier overflow passes through an activated carbon filter and to a final tank where it is given pH adjustment before discharge.

The wastes are segregated at Plant #674. A clarification pond is used for waste streams containing suspended solids. The streams going to the pond include brine purification muds and spent chlorinated lime. The mercury-contaminated waste waters, which include the brine saturation waste, brine filter backwash, cell room sumps, and tank car washes, are combined and treated for mercury separately. The combined mercury-laden waste water is sent to a collection pond and the overflow from the pond is pH adjusted before the addition of Na2S. The reacted solution is sent to a another pond and the pond overflow is passed through a carbon absorption column before final discharge. A part of the

treated effluent is re-injected into the brine well.

At Plant #012, the brine treatment area is paved to trap all spills, leaks, and rain runoff from that area. The recovered waste is recycled to the weak brine reservoir. The contaminated waste waters from the plant are re-injected into the brine wells to keep the hydraulic balance and maintain pressure in the salt deposits.

At Plant #106, the tail gases are scrubbed with sodium hydroxide and the sodium hypochlorite solution formed is sold to an adjacent pulp and paper plant. When not marketed, the hypochlorite solution is thermally decomposed by discontinuing the flow of cooling water to the tail gas absorption system. Without cooling, the unit attains the temperature required for decomposition. The brine mud is sent to a hypalon-lined lagoon for sedimentation and the overflow is returned to process. Molecular sieves are used to remove mercury from the hydrogen gas.

Mercury-bearing wastes are segregated from other waste waters and combined for treatment. Mercury-bearing leaks, spills, and precipitation are contained and collected by curbing around the cell room and are pumped to treatment from a common sump. In the treatment system, the pH is initially adjusted using waste sulfuric acid and 20 percent caustic solution as required. Sodium sulfide and filter aid are added and the waste agitated in fiberglass reaction tanks. The effluent from the tanks is filtered and the filter cake is retorted for mercury recovery. The residual waste, after mercury recovery, is placed in a lined solid waste disposal area. The filtrate is sent to the first of the two lined lagoons. Primary pH adjustment is made using waste sulfuric acid and 20 percent caustic before entry into the first lagoon; final pH adjustment is made between the first and the second lagoons.

Tail gas emission control - When chlorine gas produced from the cell is compressed and cooled, chlorine separates as liquid chlorine and noncondensable gases, known as tail or sniff gas containing chlorine vapor, are produced at the discharge end of the condenser. The tail gas is scrubbed to remove the chlorine and the amount escaping in the atmosphere with the tail gas depends on the operating conditions and the removal/recovery method employed. Emissions vary, depending on the plant capacity, presence of inerts in the gas and also on the injection of air into the chlorine condenser to prevent an explosive mixture in the vent gas. The amount of chlorine present in the tail gas is significant and the chlorine has to be removed and treated or recovered before venting into the atmosphere. The common industrial practice is to scrub with caustic soda or lime solution thus producing the corresponding hypochlorite. The hypochlorite is either sold, used on-site, sent to the waste

water treatment plant, or discharged without treatment. Treatment of this waste is a relatively recent practice. Decomposition is a common method of treatment using catalytic, thermal, and chemical methods.

Catalytic decomposition involves the addition of small quantities of cobalt, nickel, and iron chloride to the waste streams, followed by retention in reaction tanks for periods up to several days. Of the two plants employing this technology, one reports zero discharge of chlorine, and the other reports average and maximum chlorine discharge rates of 0.015 and 0.14 kg per metric ton of chlorine produced.

Thermal decomposition takes place when the temperature of the solution containing hypochlorite reaches 175 degrees F. When lime is reacted with chlorine, it results in an exothermic reaction producing heat and calcium hypochlorite. If the hypochlorite solution is not cooled, it results in thermal decomposition. One chlorine/caustic plant is using this treatment method and another is planning to use it. The plant using thermal decomposition reports complete conversion of hypochlorite to chloride.

Chemical decomposition takes place by reacting the hypochlorite solution with a chemical reactant which is usually sodium sulfite or hydrogen peroxide. Chemical decomposition is expensive but complete and rapid.

When chlorine is present in a dissolved form in water, a stripping technique is applied to recover the chlorine. Chlorine condensate streams and spent chlorine-drying acid are most commonly treated by steam or vacuum stripping, with the chlorine frequently returned to the process for purification and recovery as a product. The tail gas is not generally scrubbed with water because water does not effectively remove chlorine and the chlorine concentration in the exhaust will reach 0.1 to 4.5 percent by volume after scrubbing with water. One effective method of chlorine recovery from the tail gas is by the passage of the gas through an absorbing material such as carbon tetrachloride and subsequent recovery of the chlorine. The process is proprietary and little information is available on its design or operation.

Evaluation of Industry Production and Waste Flow Data

Chlorine/caustic manufacture with either mercury or diaphragm cells yields a number of distinct effluent streams which differ appreciably in their volume and chemical composition. Segregation of these waste streams is a primary control practice in the industry, and allows effective treatment at acceptable cost levels.

In the plants producing chlorine via mercury cells, the contact waste waters are segregated into three different streams for effective treatment. One is the brine mud, contains appreciable amounts of suspended solids. The solids are the metal precipitates and other contaminants present in brine and removed during purification of brine. It may contain small amounts of mercury. The second segregated stream is the chlorine-contaminated waste water. It is similar to the one discussed under diaphragm cells. The last segregated stream is the mercury contaminated waste water. It consists of the brine and caustic filter backwash, cell room wastes, hydrogen cooling condensate, etc. Table 11-8 gives the unit flows of the segregated streams for plants whose data is available.

Process Modifications and Technology Transfer Options

Anode Material - In the majority of cases, in both mercury and diaphragm cells, the anodes have been changed from graphite to metal. The use of metal anodes increases the cell current efficiency and eliminates or reduces considerably the chlorinated organic compounds and lead in the waste waters. The metal anodes consist of an expanded titanium metal substrate coated with precious metal and rare earth oxides.

Liquefaction of Chlorine - Utilization of refrigeration and high pressure for chlorine recovery will reduce the chlorine content in the tail gases. This technology is presently being practiced at a number of production facilities.

Best Management Practices

Area runoff - Storm runoff from the plant area for chlorine plants using mercury cells can be collected and sent to the waste water treatment plant.

Mercury emissions - Hydrogen gas produced from the cell can be passed through molecular sieves to remove the mercury escaping with the gas. This will reduce the mercury emissions and reduce atmospheric fallout in the neighborhood of the plant. This in turn will reduce mercury concentrations in storm runoff. Two plants are practicing this control treatment.

Leaks and spills - The brine treatment area and the cell room areas, especially in the mercury cell plants, should be paved with fiberglass gratings, and provision should be made to collect the leaks and spills from the operation.

Mercury contaminated solids - The precipitated mercury waste should be stored in a lined pond or disposed of in a secured landfill. In the mercury cell plant, the brine mud should be

TABLE 11-8. WASTE FLOW DATA FOR CHLORINE/CAUSTIC SUBCATEGORY USING MERCURY CELLS

Stream Description	Plant	Unit Flow m^3/kkg of chlorine
Brine mud	# 589	0.651
	# 674	0.874
Tail gas scrubber (hypochlorite solution)	# 317	0.046
	# 299	0.109
	# 385	3.39
	# 674	0.58
	# 167	2.25
Mercury contaminated waste waters	# 343	1.57
	# 907	0.357
	# 317	0.529

placed in lined pond or disposed of in a secure landfill after filtration. The brine mud contains small amounts of mercury which can leach into the ground water if proper safety precautions are not taken.

Tail gas emissions - The tail gases, after the liquefaction or recovery of chlorine, should be scrubbed with lime or caustic soda to remove residual chlorine from the vented gases. Scrubbing with water is not efficient as shown by the following data:

Type of Control	Chlorine Concentration In Exhaust, Vol. %	Emissions Factor, kg chlorine/kkg Chlorine Liquefied
None	20 to 50	10 to 80
Water Absorber	0.1 to 4.5	0.125 to 5.45
Caustic or Lime Scrubber	0.0001	0.000125

Transportation, handling and abnormal operations - Provisions should be made to remove chlorine from air emissions resulting from abnormal operating conditions such as start up and shut down, or from vents on returned tank cars, and ton containers, cylinders, storage tanks, and process transfer tanks during handling and loading of liquid chlorine.

Model Plant and BPT Treatment System Specifications

Mercury Cell Plants - The recommended BPT treatment for the waste waters from chlorine plants using mercury cells consists of:

A. Filtration of the process waste flow to remove precipitated heavy metals.

B. Lagoon settling of brine mud and long term storage at site.

C. Partial recycle of the brine waste stream to process.

D. Precipitation of mercury as mercury sulfide from the mercury-contaminated waste water streams for recovery or disposal.

Approximately 50 percent of the production data for all the chlorine/caustic plants using mercury cells is available on file. Production ranges from 19,000 to 198,000 kkg of chlorine year. Three model plants with productions of 25,300, 126,000 and 253,000 kkg/yr were selected to represent the subcategory production range. The flow per unit of production is assumed to

be the same for each size of model plant.

A. Waste water flow: For model plants, the contact waste waters from the mercury cell process are segregated into two streams. The brine mud produced during the purification of brine is segregated to remove the suspended solids present in it. The clear liquid, after settling, is recycled to the process. A unit flow of 0.42 m3/kkg of chlorine was taken for the model plant, with a suspended solids content of 10 percent. The other segregated waste water is process waste effluent contaminated with mercury. It includes the brine and caustic filter backwash, cell room waste water, hydrogen cooling condensate and decomposed scrubber waste water. A unit flow of 1.2 m3/kkg of chlorine was taken for the second segregated stream.

B. Chemicals used: Sodium bisulfide was used in an amount equivalent to 0.025 kg/kkg chlorine to precipitate mercury and other metals.

C. Solid waste produced: The brine mud constitutes the major source of solid waste produced from the process/treatment facility. Mercury sulfide and small amounts of other metal sulfide constitute the residual solid waste. The total quantity is 41.7 kg/kkg of chlorine produced.

General assumptions on chlorine bearing wastes - In the selection of model plants, the following assumptions have been made for the chlorine contaminated waste streams. The chlorine condensate waste stream has not been included in the waste streams going to the treatment facility. In the majority of the chlorine/caustic plants, this stream is stripped of chlorine by steam or vacuum and the chlorine is recycled to the purification operation. The waste water is then returned to the process and introduced to the brine purification unit or sent to the treatment unit. The quantity of waste water generated by this operation is small. In some cases the chlorine gas from the cells is contact cooled with water and the scrubbed liquid, after steam stripping, is reused. The stripping operation in the recovery of chlorine is part of the process and, therefore, its cost is not included in the treatment cost. In the case of plants using graphite anodes, the chlorine condensate contains chlorinated organic compounds and some lead in the waste waters. This waste is sealed in drums and disposed of in a secure landfill. At present, very few plants are using graphite anodes and land disposal is a good disposal method.

The spent tail gas scrubber solution, which is mainly calcium/sodium hypochlorite, is assumed to be decomposed before it is discharged. Thermal decomposition can be practical at no additional cost, while another efficient method of decomposition is catalytic decomposition. (Its costs are given separately under Estimated Control and Treatment Costs for this industry and have

not been included in the model plant costs.) The reason for excluding this cost is that in many plants the hypochlorite waste stream is either sold or used on-site. If neither of these two alternatives is available, then it is decomposed and discharged.

The hypochlorite stream is thus not continuously treated at all plants and the choice between handling it as a by-product or a waste is largely dependent on the local market demand.

11.2 TECHNOLOGY BASED POLLUTION ABATEMENT

11.2.1 Advanced Level Treatment Applications

Priority Pollutants to be Controlled

Existing chlorine plants using mercury cells are already controlling mercury in their waste waters in response to current regulations which call for a discharge of less than 0.00014 kg/kkg of product as a 30-day average. Potential candidates for control are the common heavy metals: chromium, nickel, zinc, copper, and antimony, as well as thallium and arsenic, most of which respond to the sulfide process for mercury precipitation.

Inventory of Priority Pollutants Present in Process Operations

In addition to mercury, lead and asbestos, waste waters from the chlorine industry may contain chromium, copper, zinc, thallium, nickel, arsenic, and antimony, some of which undoubtedly represent corrosion products from reaction between chlorine and the plant materials of construction. With the phasing out of graphite anodes, chlorinated organics are not common constituents of mercury cell plant waste waters, although some may originate by the contact of chlorine with rubber linings and F.R.P. components. Traces of certain priority organics were found but none in significant concentrations.

Removal Mechanisms Available

Most of the above listed pollutants, will be essentially removed by sulfide precipitation and filtration. The exceptions are chromium and asbestos. All of the heavy metals can be controlled by alkaline precipitation and filtration, with varying degrees of specific metal removal at a given pH.

Selection of Appropriate Technology

Mercury Cell - BPT (Level 1) - Sulfide precipitation followed by pressure filtration is chosen as the best available technology for separating mercury and other heavy metals (except chromium). Hexavalent chromium will be reduced to its less toxic trivalent form, but may remain in solution, depending on final pH.

Mercury Cell - Level 2 - The filtered Level 1 effluent is passed through a granular activated carbon bed, where residual metal sulfides and any metallic mercury will be adsorbed. This treatment was chosen over ion exchange because at low pollutant levels the carbon bed need not be regenerated but can be replaced with new carbon at approximately one-year intervals. Although ion exchange resins could be similarly replaced, they would not adsorb reduced metallic mercury. There is insufficient performance data to recommend the xanthate process at this time as an alternative to sulfide precipitation.

Flow Diagrams

Treatment process components for the multiple waste streams of the mercury cell process are shown in Figure 11-6 (Level 1) and Figure 11-7 (Level 2).

Description of Each Treatment Level

Equipment functions - In both processes the metal-contaminated wastes are equalized in a surge tank. In the Level 1 mercury process, mercury sulfide precipitate is removed in a conventional plate and frame filter press. At Level 2 the mercury process metal-bearing wastes are passed through a conventional granular activated carbon filter for adsorption of any residual mercury.

Chemicals and handling - In the mercury cell process, sodium bisulfide is used for mercury sulfide precipitation at pH 5 to 7. Care is needed to prevent escape of toxic and obnoxious H_2S fumes at pH levels below 7. At Level 2 no additional chemicals are used since the activated carbon bed is not regenerated but is periodically removed and replaced. The handling of granular carbon may cause temporary dust problems but it causes no special hazards.

Separation and removal of solids - In all processes conventional settling and filtration are used to separate solids.

Because hazardous asbestos, mercury, and toxic metals remain in the solids, all sludge (except brine mud) should be disposed

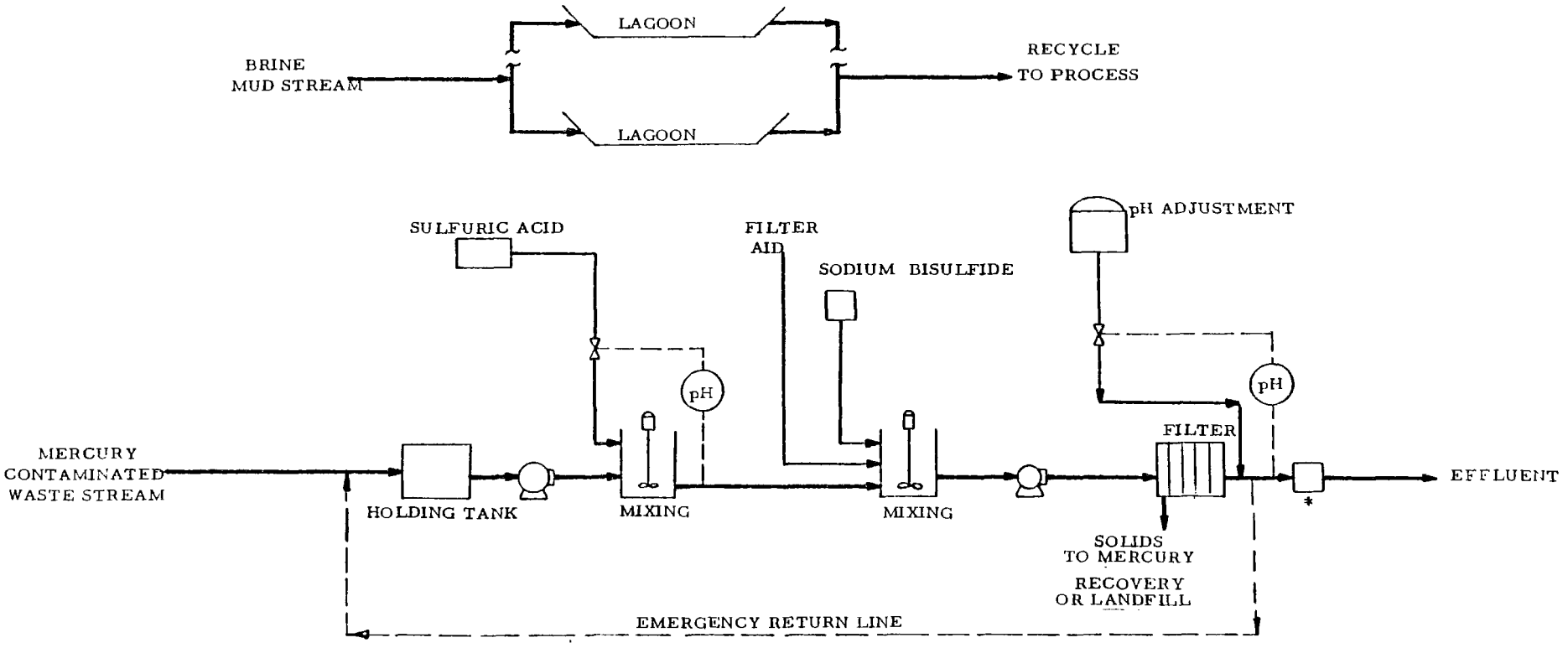

*Includes pH monitoring, flow monitoring and sampler

Figure 11-6 . Waste water treatment Level 1 for chlorine - mercury cell subcategory.

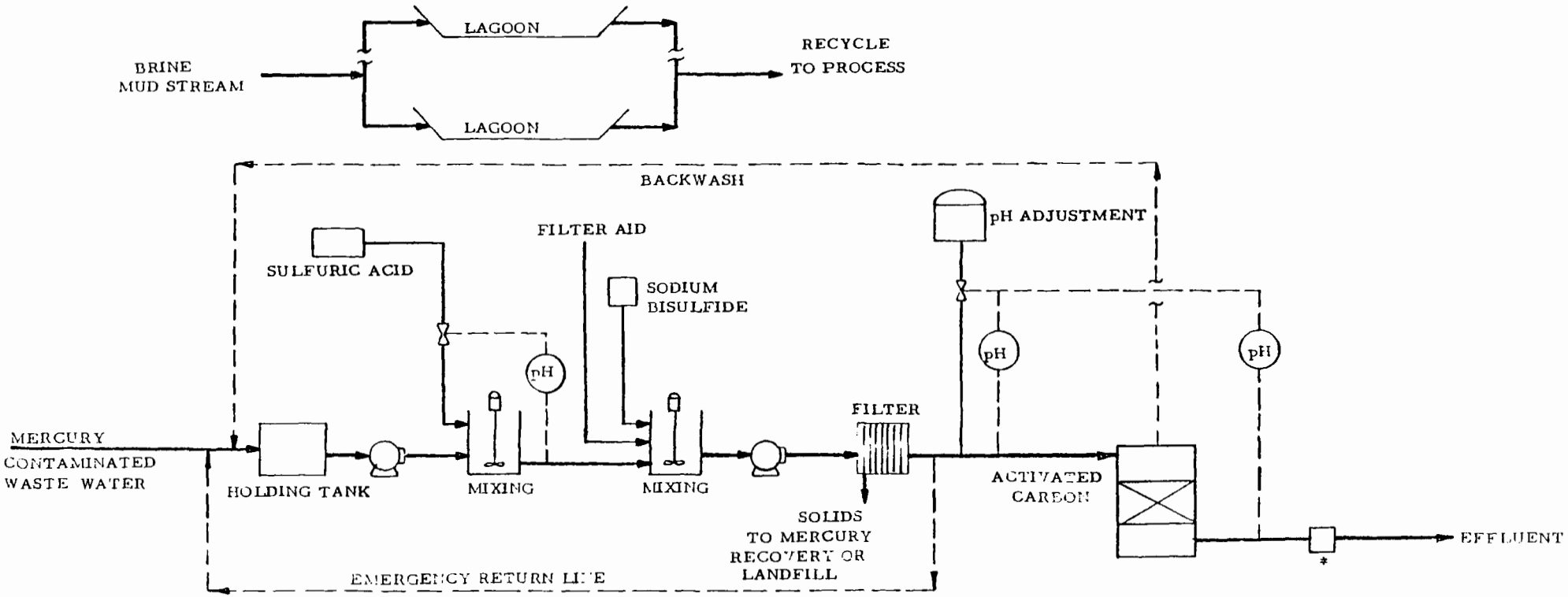

*Includes pH monitoring, flow monitoring and sampler

Figure 11-7 . Waste water treatment Level 2 for chlorine - mercury cell subcategory

of in a safe chemical waste area.

Monitoring requirements - Monitoring of heavy metals including mercury, is done by atomic absorption methods, usually at a qualified commercial laboratory. Simple field tests for heavy metals as a group are available for routine process control.

11.2.2 Estimated Performance of BPT Systems

Waste water control and treatment practices at chlor-alkali plants involve waste segregation since specific pollutants arise in separate waste streams. Examples of these are pollutants common to both mercury cell and diaphragm cell plants, mainly suspended solids and chlorine.

Chlorine, as hypochlorite, primarily arises from alkaline scrubbing of noncondensibles following product recovery. The resultant hypochlorite stream is often used in another process or sold. A few plants now remove the chlorine by thermal or catalytic decomposition or by stripping before discharge, but many plants discharge the waste without treatment. Table 11-9 presents residual chlorine effluent loadings at plants which use, sell, or treat chlorine-bearing waste waters.

Mercury Cell Plants - Because it has been limited in discharge permits for some time, mercury removal technology is employed at almost all mercury cell plants. Most commonly, mercury-contaminated streams are segregated and the mercury is precipitated as the sulfide and removed by settling or filtration. Mercury recovery is practiced at some plants. As shown in Table 11-10, this technology is highly effective in reducing mercury discharges.

BPT technology for waste water treatment and control at mercury cell chlorine plants has been specified and includes containment of mercury-bearing waste waters followed by sulfide precipitation and filtration before discharge.

The pollutants previously regulated at mercury cell chlorine plants are suspended solids and mercury. Priority pollutants other than mercury that were found at significant concentrations in the screening and verification programs were identified as arsenic, thallium, and zinc.

Sulfide precipitation is known to be effective for many trace metals and a discussion of the treatability of priority pollutant metals with sulfide is presented in Section 8. During screening and verification, five plants employing mercury removal systems were sampled. Table 11-11 presents the priority pollutant loads found in the treated effluents at four of these

TABLE 11-9. RESIDUAL CHLORINE EFFLUENT LOADINGS AT SELECTED CHLOR-ALKALI PLANTS *

Plant	Chlorine Waste Load kg/kkg Average	Range
# 207	0.33	1.4 maximum
# 014	0.04	0 to 1.29
# 819	ND	0.016 to 0.14
# 747	0.002	0 to 0.006
# 106	0.001	0 to 0.14
# 589	0.003	0.001 to 0.011
# 747**	0.0025	ND
# 324**	3.72	0.38 to 12.2

*See Reference 3

**From Plant Long Term Monitoring Data

TABLE 11-10. EFFLUENT LOADINGS FROM SELECTED CHLOR-ALKALI MERCURY CELL PLANTS*

Plant	Mercury Waste Load kg/kkg		
	Average	Maximum Daily	Maximum 30-day Average
#343	0.000025	0.00094	0.00029
#907	0.00002	0.00026	0.00003
#898	0.00006	0.0025	0.00043
#195	0.00004	0.00073	0.00015
#106	0.000065	0.00022	0.000096
#747	0.000055	0.00008	0.000067
#589	0.000055	0.00086	0.00049
#299	0.00004	0.00019	0.000056
#747**	0.000055	0.000083	0.000065
#317**	0.000006	0.000048	0.00001
#195**	0.000022	0.00066	0.0001
#324**	0.00086	0.0022	0.0018

*See Reference 3

**From Plant Long Term Monitoring Data

TABLE 11-11. EFFLUENT PRIORITY POLLUTANT LOADS FOLLOWING MERCURY TREATMENT[1] kg/kkg*

POLLUTANT	PLANT			
	#747	#106	#317	# 299
Antimony, Sb	< 0.059	1.6	< 0.10	0.22
Arsenic, As	< 0.002	< 0.015	< 0.008	0.092
Cadmium, Cd	0.03[2]	< 0.039	< 0.01	0.11
Chromium, Cr	< 0.011	< 0.028	< 0.02	0.09
Copper, Cu	< 0.006	0.15	< 0.012	0.055
Lead, Pb	0.016	1.05[2]	0.07	< 0.074
Nickel, Ni	< 0.011	0.40	< 0.028	< 0.074
Silver, Ag	< 0.0035	0.72	< 0.006	0.022
Thallium, Tl	< 0.01	0.71	< 0.1	0.3
Zinc, Zn	< 0.006	< 0.23	0.21	0.15
Flow (m^3/kkg)	0.23	2.8	0.41	1.5

[1]Results of verification sampling 3 days.

[2]Indicates effluent load higher than influent load.

* Note: loads are in g/kkg.

plants.

Base Level Performance Characteristics for BPT Pollutant Removal

Table 11-12 presents effluent quality achievable through implementation of BPT or Level 1 treatment technologies for mercury cell chlorine plants.

Base Level Performance Characteristics for Priority Pollutant Removal

Also presented in Table 11-12 is the estimated achievable effluent qualities for priority pollutants with BPT technology. Not included are estimates for the removal of chlorinated organics. Although only limited data are available, it is not anticipated that chlorinated organics will be reduced significantly with BPT treatment.

Pretreatment Applications

Several chlor-alkali plants presently discharge all or part of their process waste water to POTWs. Pollutants present in chlorine process wastes which require pretreatment include mercury, lead, and chlorine. In addition, some control of pH and suspended solids is required.

On the basis of the effluent quality achievable through the application of BPT technology, as presented above, BPT technology is also recommended for pretreatment.

11.2.3 Estimated Performance of Advanced Level Systems

Advanced Level Performance Estimates for BPT and Priority Pollutant Removal

The advanced treatment performance estimates presented below include estimates for chlorine discharges. Although this parameter was not regulated in previous guidelines, and most chlorine plants reuse or sell their chlorine-laden waste water, the technology for chlorine removal has recently been established for this subcategory and therefore achievable limitations are recommended. Table 11-13 presents estimated achievable effluent quality through implementation of Level 2 advanced technologies.

TABLE 11-12 CONTROL PARAMETER LIMITATIONS
SUBCATEGORY: Chlorine - Mercury Cell
Level of Treatment: 1
Waste Water Flow: 2 m3/kkg

Pollutant	Subcategory Performance (mg/l)	(1) VFR	Quality Limit (mg/l)		Emission Limit (kg/kkg)	
			30 day Aver	24 hr Max	30 day Aver	24 hr Max
BPT Pollutants:						
Total Suspended Solids, TSS	12	2.0	15	30	0.03	0.06
Mercury, Hg	0.02	2.0	0.05	0.10	0.0001	0.0002
Proposed Priority Pollutants:						
Arsenic, AS	0.04 (2)	2.0	0.05	0.10	0.0001	0.0002
Thallium, Tl	0.3 (2)	4.0	0.2	0.8	0.0004	0.0016
Zinc, Zn	0.5 (2)	4.0	0.2	0.8	0.0004	0.0016

(1) - VFR: ratio of the 24 hour variability factor to the 30 day variability factor.

(2) - Verfication Sampling

TABLE 11-13 CONTROL PARAMETER LIMITATIONS
SUBCATEGORY: Chlorine - Mercury Cell
Level of Treatment: 2
Waste Water Flow: 2 m3/kkg

Pollutant	Treatability (mg/l)	(1) VFR	Quality Limit (mg/l)		Emission Limit (kg/kkg)	
			30 day Aver	24 hr Max	30 day Aver	24 hr Max
BPT Pollutants:						
Total Suspended Solids, TSS	15	2.0	15	30	0.03	0.06
Mercury, Hg	0.02	2.0	0.01	0.02	0.00002	0.00004
Total Residual Chlorine, Cl2	0.2	2.0	0.2	0.4	0.0004	0.0008
Proposed Priority Pollutants						
Arsenic, As	0.04	2.0	0.05	0.10	0.0001	0.0002
Thallium, Tl	0.3	4.0	0.2	0.8	0.0004	0.0016
Zinc, Zn	0.5	4.0	0.2	0.8	0.0004	0.0016

(1) - VFR: ratio of the 24 hour variability factor to the 30 day variability factor.

New Source Applications

Examination of the waste water control and treatment alternatives applicable to new chlor-alkali facilities has led to the following conclusions:

All new sources should incorporate metal anodes rather than graphite anodes. All new sources should provide for alternative uses or provide for decomposition of chlorine-bearing wastes.

Mercury cell plants should provide treatment equivalent to BPT.

Response to Remand Issues

Zero-discharge limitations originally proposed for chlor-alkali plants were remanded primarily because no plant was shown to achieve zero discharge. The proposed alternative advanced treatment levels provide for waste water discharge.

11.2.4 Cost Estimates

Discussion

On the basis of the model plant specifications and treatment system design concepts presented earlier, the estimated control costs for three production rates at both mercury cell and diaphragm cell plants are given in Tables 11-14 through 11-16. The costs shown at each level of treatment correspond to the model plant BPT system (Level 1) and one or more alternative BAT systems (Level 2, 3, etc.) which may add to or modify the existing BPT system to meet more stringent priority pollutant removal requirements. The BAT systems also provide a higher effluent water quality with respect to the conventional and nonconventional parameters.

Annual treatment cost as a function of production rate is shown graphically in Figure 11-8. Similarly presented is the relationship of unit cost (treatment cost per metric ton of product) to production rate Figure 11-9. The estimated ranges of total unit costs are shown and Table 11-17 presents a summary of the unit cost distribution between amortization and operation and maintenance components.

Summary

Although chlorine manufacture usually produces three waste streams, only the brine mud and metal or asbestos contaminated

TABLE 11-14 MODEL PLANT TREATMENT COSTS

Subcategory CHLORINE Mercury cell — Type of Regulation BAT

Production 19,100 metric tons per year (21,057 tons per year)
54 metric tons per day (60 tons per day)
Waste water flow 91 cubic meters per day.

	LEVEL OF TREATMENT*	
	FIRST	SECOND
A. INVESTMENT COST		
Construction	$49,100	$500
Equipment in place, including piping, fittings, electrical work and controls.....	68,100	15,000
Monitoring equipment in place.....	9,000	
Engineering design and inspection.....	25,240	3,100
Incidentals, overhead, fees, contingencies...	25,240	3,100
Land.....	21,000	
TOTAL INVESTMENT COST	$197,680	$21,700
B. OPERATION AND MAINTENANCE COST		
Labor and supervision.	$112,000	$14,000
Energy.....	1,250	
Chemicals.....	500	1,400
Maintenance.....	17,668	2,170
Taxes and insurance...	5,930	651
Residual waste disposal.....	4,400	
Monitoring, analysis and reporting.....	15,000	7,500
TOTAL OPERATION AND MAINTENANCE COST	$156,748	$25,721
C. AMORTIZATION OF INVESTMENT COST	$28,745	$3,530
TOTAL ANNUAL COST	$185,493	$29,251

*First level represents the base cost of treatment system. Other levels represent the incremental cost above base cost.

TABLE 11-15 MODEL PLANT TREATMENT COSTS

Subcategory CHLORINE Mercury cell Type of Regulation BAT

Production 95,500 metric tons per year (105,288 tons per year)
272 metric tons per day (300 tons per day)
Waste water flow 455 cubic meters per day.

	LEVEL OF TREATMENT*	
	FIRST	SECOND
A. INVESTMENT COST		
Construction	$134,500	$1,000
Equipment in place, including piping, fittings, electrical work and controls.....	141,300	61,000
Monitoring equipment in place.....	9,000	
Engineering design and inspection.....	56,960	12,400
Incidentals, overhead, fees, contingencies...	56,960	12,400
Land.....	63,000	
TOTAL INVESTMENT COST	$461,720	$86,800
B. OPERATION AND MAINTENANCE COST		
Labor and supervision.	$112,000	$14,000
Energy.....	3,700	
Chemicals.....	2,500	7,000
Maintenance.....	39,872	8,680
Taxes and insurance...	13,851	2,604
Residual waste disposal.....	21,400	
Monitoring, analysis and reporting.....	15,000	7,500
TOTAL OPERATION AND MAINTENANCE COST	$208,323	$39,784
C. AMORTIZATION OF INVESTMENT COST	$64,871	$14,122
TOTAL ANNUAL COST	$273,194	$53,906

*First level represents the base cost of treatment system.
Other levels represent the incremental cost above base cost.

TABLE 11-16 MODEL PLANT TREATMENT COSTS

Subcategory CHLORINE Mercury cell		Type of Regulation BAT
Production	191,000 metric tons per year	(210,577 tons per year)
	545 metric tons per day	(601 tons per day)
Waste water flow	910 cubic meters per day.	

	LEVEL OF TREATMENT*	
	FIRST	SECOND
A. INVESTMENT COST		
Construction	$257,700	$2,000
Equipment in place, including piping, fittings, electrical work and controls.....	213,200	115,000
Monitoring equipment in place.....	9,000	
Engineering design and inspection.....	95,980	23,400
Incidentals, overhead, fees, contingencies...	95,980	23,400
Land.....	123,000	
TOTAL INVESTMENT COST	$794,860	$163,800
B. OPERATION AND MAINTENANCE COST		
Labor and supervision.	$112,000	$14,000
Energy.....	6,400	
Chemicals.....	5,000	14,000
Maintenance.....	67,186	16,380
Taxes and insurance...	23,845	4,914
Residual waste disposal.....	42,600	
Monitoring, analysis and reporting.....	15,000	7,500
TOTAL OPERATION AND MAINTENANCE COST	$272,031	$56,794
C. AMORTIZATION OF INVESTMENT COST	$109,311	$26,650
TOTAL ANNUAL COST	$381,342	$83,444

*First level represents the base cost of treatment system. Other levels represent the incremental cost above base cost.

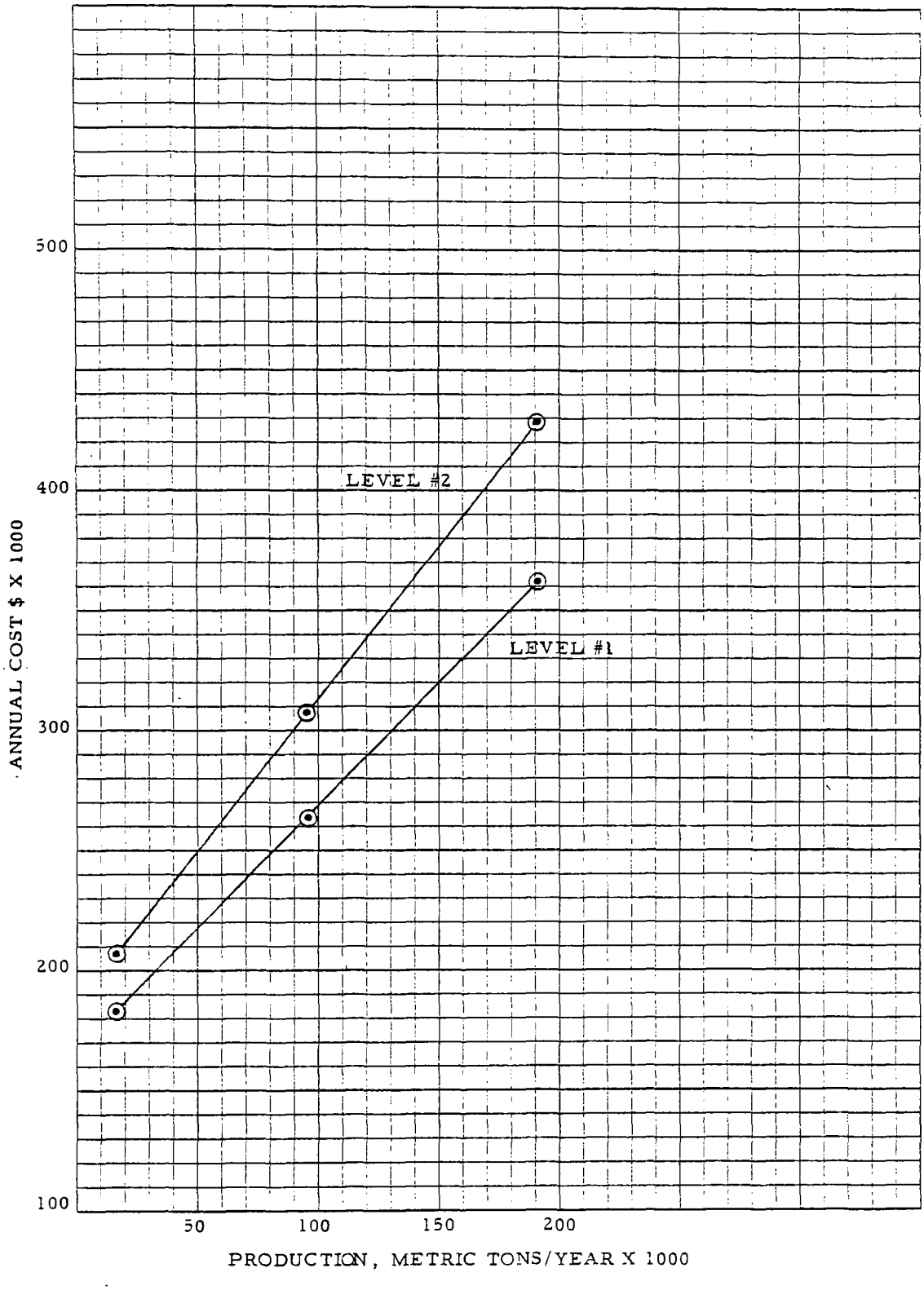

Figure 11-8. Annual treatment cost vs. production for the Chlorine Subcategory (Mercury Cell Process)

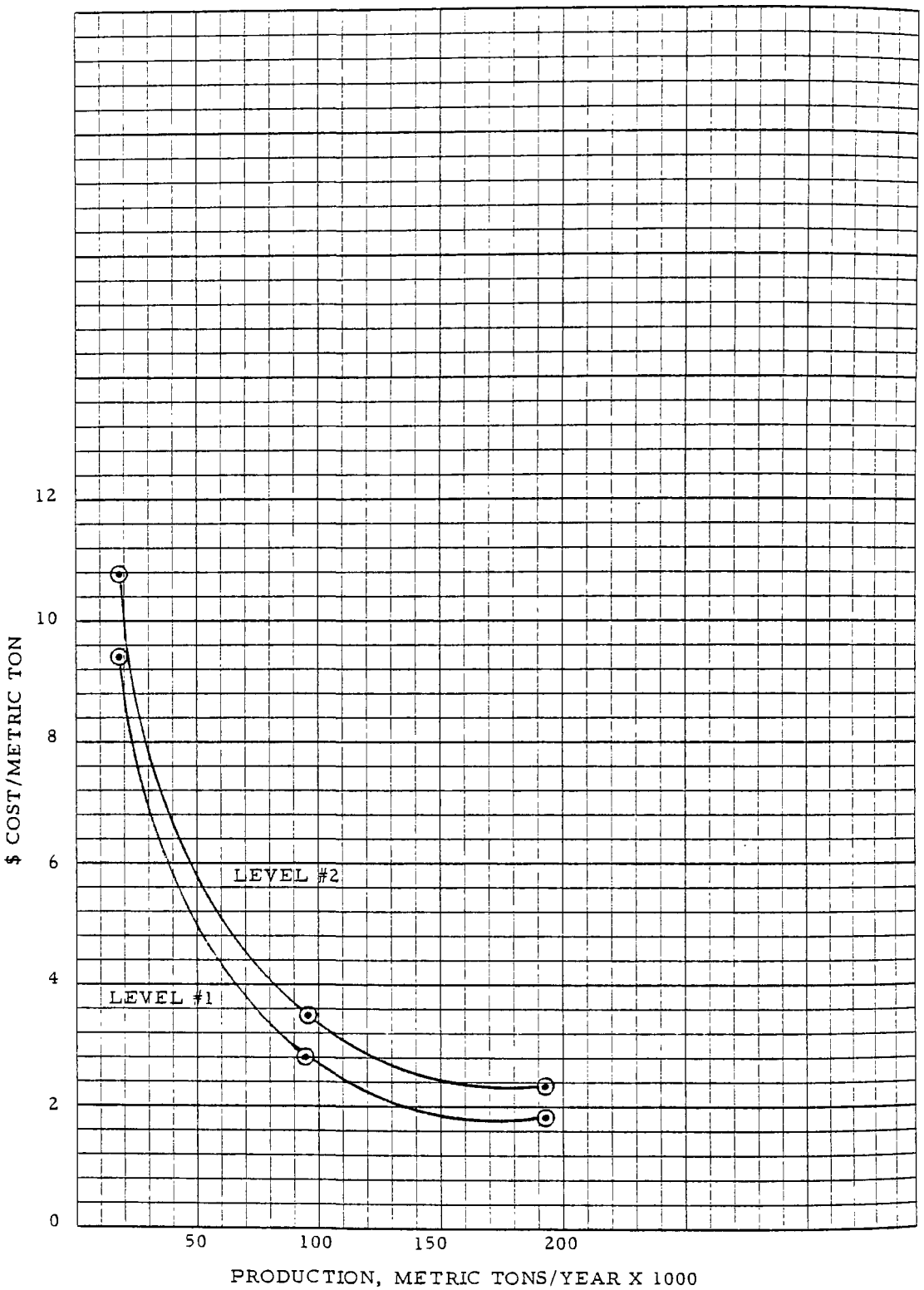

Figure 11-9. Annual unit treatment cost vs. production for the Chlorine Subcategory (Mercury Cell Process)

TABLE 11-17 MODEL PLANT TREATMENT COSTS

Subcategory CHLORINE Mercury cell Type of Regulation BAT

			Annual Treatment Costs ($/kkg)			
			LEVEL OF TREATMENT			
	PRODUCTION (kkg/yr)	FLOW (m3/day)	FIRST $	SECOND $	THIRD $	FOURTH $
Annual Operation and Maintenance	19,100	91	8.21	1.35	Not Applicable	
	95,500	455	2.18	0.42		
	191,000	910	1.42	0.30		
Annual Amortization	19,100	91	1.50	0.18		
	95,500	455	0.68	0.15		
	191,000	910	0.57	0.14		
Total Cost	19,100	91	9.71	1.53		
	95,500	455	2.86	0.56		
	191,000	910	2.00	0.44		

wastes are considered as contributing to waste flows and treatment costs. Tail gas scrubber wastes, typically high in sodium hypochlorite, are usually sold or returned to process, and are therefore excluded from waste flows and waste treatment costs for the model plants. However, for the range of annual production in metric tons from 31,850 to 190,750, the annual cost of decomposition of sodium hypochlorite varies from $1.26 to $4.30 per metric ton of product (3).

The chlorine subcategory is a multi-product industry, since caustic soda is a by-product of chlorine manufacture by either process. In this report investment costs and annual costs are expressed in terms of treatment cost per metric ton of chlorine production, without considering the production or value of the by-product caustic soda.

In this report brine mud is presumed to be left on-site in accordance with current practice at many chlorine plants. For neutralization, it is assumed that waste sulfuric acid is available at the plant at no cost.

Mercury cell base level BPT costs - waste treatment cost summary sheets for three chlorine production rates by the mercury cell process are included as Tables 11-14, 11-15 and 11-16 respectively. Base level costs are shown as the First Level of treatment. The unit costs of BPT treatment per metric ton of chlorine production are shown in Figure 11-19 as the lower curve marked Level 1, Mercury Cell, varying from $1.92 to $9.44 per metric ton.

Mercury cell advanced level costs - waste treatment cost summary Tables 11-14, 11-15 and 11-16 show incremental advanced level costs in the column marked "second". The unit costs of advanced treatment per metric ton of chlorine production, which includes both first and second level costs, are shown by the middle curve (Level 2) of Figure 11-9, varying from $2.25 to $10.84 per metric ton.

11.3 ASSESSMENT OF THE WATER POLLUTION POTENTIAL - DIAPHRAGM CELL

11.3.1 Industry Profile and Analytical Results

Chlorine - Diaphragm Cell Plants (Metal Anode)

The industrial profile data for this industry is given in Table 11-18 and existing regulations in Table 11-2.

The priority pollutants found in the raw waste during sampling at Chlorine-Diaphragm Cell - Metal Anode plants were as

TABLE 11-18 - SUBCATEGORY PROFILE DATA SUMMARY

SUBCATEGORY	CHLORINE DIAPHRAGM CELL
Total subcategory capacity rate	8,272,600 kkg/year
Total subcategory production rate	6,427,000 kkg/year
Number of plants in this subcategory	45
308 Data on file for	19
With total capacity of	6,397,000 kkg/year
With total production of	4,200,000 kkg/year
Representing capacity	77 percent
Representing production	66 percent
Plant production range:	
Minimum	14,700 kkg/year
Maximum	1,500,000 kkg/year
Average production	221,000 kkg/year
Median production	103,000 kkg/year
Average capacity utilization	67 percent
Plant age range:	
Minimum	4 years
Maximum	74 years
Wastewater flow range:	
Minimum	1,100 cubic meters/day
Maximum	7,100 cubic meters/day
Volume per unit product:	
Minimum	1 cubic meters/kkg
Maximum	23 cubic meters/kkg

Sources of data are Stanford Research Institute, Directory of Chemical Producers, U.S.A., 1977, U.S. Department of Commerce, Current Industrial Reports, December 1977; Energy and Environmental Analysis, Inc.; Draft Report, "Preliminary Economic Assessment of Effluent Limitations in the Inorganic Chemical Industry."

follows:

Pollutant	Maximum Concentration Observed ug/l Screening	Verification (4 Plants)
Chromium	940	18750
Copper	525	16650
Lead	255	2000
Nickel	54400	22100
Mercury	9	347
Thallium	14	<2
Antimony	20	43 Found at one plant only
Arsenic	10	660
Cadmium	2	62
Selenium	<9	93
Zinc	24	4290

A summary of daily and unit product raw waste loads for all plants sampled can be found in Table 11-19. Individual plant raw waste loads per unit product found in sampling can be found in Table 11-20. Table 11-20A summarizes asbestos sampling results at three facilities.

Based on the total annual production of this subcategory and the average waste load generated per unit product, the estimated total priority pollutant raw waste loads generated each year for this subcategory are as follows:

Pollutant	Waste load (kg/year)
Chromium	6100
Copper	2600
Lead	270
Nickel	4100
Mercury	8.4
Arsenic	36
Cadmium	21
Selenium	26
Zinc	1500

TABLE 11-19. SUMMARY OF RAW WASTE LOADINGS FOUND IN SCREENING AND VERIFICATION SAMPLING

SUBCATEGORY CHLORINE-DIAPHRAGM CELL WITH METAL ANODES

Pollutant	Loadings						
	kg/day			kg/kkg			No. of Plants
	Minimum	Average	Maximum	Minimum	Average	Maximum	Averaged
Priority							
Arsenic, As	0.000038	0.0021	0.0033	0.00000015	0.0000056	0.000014	5
Cadmium, Cd	0.00034	0.0015	0.0029	0.000001	0.0000033	0-000006	5
Chromium, Cr	0.0036	0.58	2.81	0.000015	0.00095	0.0046	5
Copper, Cu	0.0037	0.12	0.27	0.000011	0.00041	0.0012	5
Lead, Pb	0.00086	0.021	0.064	0.0000037	0.000042	0.000095	5
Nickel, Ni	0.013	0.28	0.88	0.00004	0.00064	0.0014	5
Zinc, An	0.017	0.08	0.17	0.000057	0.00024	0.0007	4
Mercury, Hg	0.00018	0.00053	0.00082	0.0000003	0.0000013	0.0000025	3
Selenium, Se	0.00023	0.0016	0.003	0.000003	0.000004	0.000005	2
Antimony, Sb		0.00064			0.000003		1
Thallium, Tl		0.000045			0.0000002		1
Classical	7.39						
TSS		23.8	53.9	0.026	0.069	0.18	

TABLE 11-20. PRIORITY POLLUTANT RAW WASTE LOADS (in kg/kkg of Product)

SUBCATEGORY	CHLORINE - DIAPHRAGM CELL				
POLLUTANT	PLANT *				
	#014	#261	#736	#738 (old)	#738 (new)
Chromium, Cr	0.000015	0.000073	0.000044	0.0046	0.00004
Copper, Cu	0.000011	0.00064	0.0012	0.00011	0.0001
Lead, Pb	0.000004	0.000077	0.0000037	0.00003	0.000095
Mercury, Hg			0.0000025	0.000001	0.0000003
Nickel, Ni	0.00083	0.00085	0.000056	0.0014	0.00004
Selenium, Se				0.000005	0.000003
Thallium, Tl	0.0000002				
Zinc, Zn		0.000057	0.0007	0.00009	0.0001
Antimony, Sb			0.000003		
Arsenic, As	0.00000015	0.000006	0.000014	0.000004	0.000004
Cadmium, Cd	0.0000014	0.000001	0.000006	0.000004	0.000004

*Does not include brine muds.

TABLE 11-20A. RESULTS OF ASBESTOS SAMPLING AT DIAPHRAGM CELL PLANTS

Plant	Stream	Total Asbestos Fibers (MFL)*	Chrisotile MFL	Amphibole MFL
#261	Supply	8.0	7.5	0.4
	Cell Wash	2.1×10^8	2.1×10^8	0
	Filtered Discharge	1.6×10^3	1.6×10^3	0
	Barometric Condenser	0.4	0.4	0
#736	Supply	0.7	0.7	0
	Cell Wash	2.0×10^7	2.0×10^7	0
	Cell Room Waste	2.9×10^2	2.8×10^2	8
	Barometric Condenser	1.8	0	1.8
	Barometric Condenser	5.3	5.3	0
	Barometric Condenser	1.4×10^2	1.4×10^2	0
#967	Supply	9.7×10^2	9.7×10^2	0
	Cell Waste	2.4×10^4	2.4×10^4	8×10^2
	Pond Effluent	2.4×10^3	2.4×10^3	0
	Caustic Wash	7.8×10^3	7.8×10^3	0
	Brine Filter Backwash	8.0×10^2	6.2×10^2	1.8×10^2
	Cathode Wash Waste	3.2×10^5	3.2×10^5	0
	Condensate & Spent Acid	2.7×10^2	1.8×10^2	8.9×10
	Neutralizer Waste	2.1×10^3	2.1×10^3	0

*Million fibers per liter

Chlorine-Diaphragm Cell Plants (Graphite Anode)

The industrial profile data is included in Table 11-5 and existing regulations in Table 11-2.

The priority pollutants found in significant concentrations in the raw waste during screening at Chlorine-Diaphragm Cell - Graphite Anode Plant #967 were as follows:

Pollutant	Maximum Concentration ug/l
Lead	1,631,000
Antimony	1910
Chromium	300
Zinc	3204
Copper	7450
Mercury	74
Arsenic	680
Cadmium	46
Nickel	640
Organics	
Benzene	15
Carbon Tetrachloride	197
1,2-Dichloroethane	621
Hexachloroethane	90
Chloroform	691
Dichlorobromomethane	309
Bis(2-ethylhexyl) phthalate	120
Tetrachloroethylene	196

A list of daily and unit product raw waste loads for the priority metals found at Plant #967 can be found in Table 11-21.

A list of daily and unit product raw waste loads for the organics found at Plant #967 can be found in Table 11-22.

The major waste stream source of organic priority pollutants was the chlorine header condensate stream. The neutralizer waste stream was the second largest contributor of organics.

All of the organic priority pollutants found greater than 0.45 kg/day were volatile organics. The remaining organics were at nonsignificant levels.

Total priority pollutant waste loads for this subcategory division cannot be calculated at this time because it is not known how many graphite anode plants there are, and the total annual production value is also not available.

TABLE 11-21. METAL PRIORITY POLLUTANT RAW WASTE LOADINGS FOUND IN SAMPLING AT A CHLORINE-DIAPHRAGM CELL PLANT WITH GRAPHITE ANODES

Pollutant	PLANT #967 Loadings kg/day Average	kg/kkg Average
Priority		
Chromium, Cr	0.057	0.00026
Copper, Cu	0.42	0.0019
Cadmium, Cd	0.00091	0.000004
Lead, Pb	60.0	0.273
Mercury, Hg	0.005	0.000022
Nickel, Ni	0.12	0.00054
Zinc, Zn	0.12	0.00054
Antimony, Sb	0.058	0.00026
Arsenic, As	0.60	0.0028

TABLE 11-22. ORGANIC PRIORITY POLLUTANT RAW WASTE LOADINGS FOUND IN SAMPLING AT A CHLORINE - DIAPHRAGM CELL PLANT WITH GRAPHITE ANODE

Pollutant	PLANT #967 Loadings	
	kg/day Average	kg/kkg Average
Benzene	0.00091	0.000004
Carbon Tetrachloride	0.066	0.0003
1,2-Dichloroethane	0.23	0.001
Hexachloroethane	0.03	0.00014
Chloroform	0.24	0.0011
Dichlorobromomethane	0.10	0.00046
Hexachlorobutadiene	0.011	0.00005
Bis(2-ethylhexyl)phthalate	0.0023	0.00001
Tetrachlorothylene	0.10	0.00046

11.3.2 Process Waste Sources

General Process Description

Diaphragm Cell Process - The sodium chloride (NaCl) solution (brine or salt dissolved in water) is purified before it is sent to the diaphragm cell for chlorine, caustic and hydrogen production. This is done by the addition of soda ash (Na_2CO_3) and small amounts of caustic soda until the pH increases to 10 or 11. The calcium and iron present in the brine and trace amounts of other metals are precipitated as hydroxides or carbonates, and the brine is sent to a clarifier for solids separation. The underflow from the clarifier, known as brine mud, is sent to a lagoon or is filtered. The overflow from the clarifier, which is brine, is heated and brought to saturation by the addition of salt recovered from the caustic evaporation. The pH is then lowered to 6 by addition of HCl before introducing it to the diaphragm cell.

The saturated salt solution (26 percent concentration) is electrolyzed in the diaphragm cell to form chlorine, hydrogen, and sodium hydroxide according to the reaction:

$$2NaCl + 2H_2O = Cl_2 + 2NaOH + H_2 \qquad (1)$$

In one pass through the cell, the salt solution is decomposed to approximately half of its original concentration. The diaphragm cell contains a porous asbestos diaphragm separating the anode from the cathode. Chlorine is liberated at the anode and the hydrogen and caustic are produced at the cathode. In the past, the predominant material used for anodes was graphite with lead used to provide an electrical contact and support. The lead is joined to the graphite anode by an organic binder. In recent years, the majority of graphite anodes have been changed to stabilized metal anodes, made of titanium with a platinum or rubidium oxide coating. The advantages of using metal anodes compared to graphite anodes are increased current efficiency, dimensional stability and a lower chlorine overvoltage, as well as a reduction in the quantity of waste water produced. The use of metal anodes also reduces or eliminates the chlorinated organics and lead impurities in the waste waters. The cathodes in the diaphragm cells are usually hollow steel screens with a coating of asbestos deposited on the outside.

The hydrogen from the top of the cathode is cooled to remove water and other impurisies, and it either sold, vented to the atmosphere or burned to produce steam. The caustic leaving the cathode has a concentration of 11-12 percent NaOH. It is

concentrated by multiple effect evaporation to increase the concentration to 50 percent. The vapor evolved from the last effect of the evaporator is air condensed in direct contact with water using barometric condensers, or in surface condensers, using noncontact cooling waters. When barometric condensers are used, the amount of waste water produced by this operation is large. During evaporation, salt crystallizes and is removed from all the evaporators. The concentrated caustic is then settled and filtered to remove the residual salt which is recycled to the brine preparation stage.

The chlorine from the cell is cooled to remove water and other impurities. The condensates are either discharged without treatment or recycled to the brine purifier after steam stripping for chlorine recovery. The chlorine gas, after cooling, is scrubbed with concentrated sulfuric acid to remove water. This is done in a series of towers where the acid flow is counter to that of the chlorine gas. The acid is used until a constant dilution is reached. The spent acid is either regenerated, used on site or is sold. Figure 11-10 is a general flow diagram for the manufacture of chlorine/caustic using diaphragm cells.

Water Use and Waste Source Inventories

In the diaphragm cell, a large quantity of water is used in the barometric condensers if the vapors from the caustic evaporators are contact cooled. Table 11-23 is a summary of the water usage in the barometric condensers for a few plants where data are available. For plants practicing contact cooling through barometric condensers, the average amount of water usage is twice that of the mercury cell plant per metric ton of chlorine produced. The range of water usage in a diaphragm cell is 15 to 492 cubic meters per metric ton of chlorine. Of the total water usage in diaphragm cell plants, approximately 50 percent is used for noncontact cooling. In addition, the amount of water used for cleaning diaphragm cells is higher than that of mercury cells.

Barometric Condenser Water - The waste water specific to the diaphragm cell process is the barometric condenser water. A significant amount of water is used in contact cooling the vapors from the evaporators used to concentrate the caustic. In the mercury cells, the caustic comes out at a concentration of 50 percent and does not require evaporators unless a caustic of high concentration (e.g., 73 percent) is required. The barometric condenser waste water ranges from 89 to 191 cubic meters per metric ton of chlorine. The barometric condenser waste water is either discharged without treatment, or recycled and a bleed is discharged with or without pH adjustment.

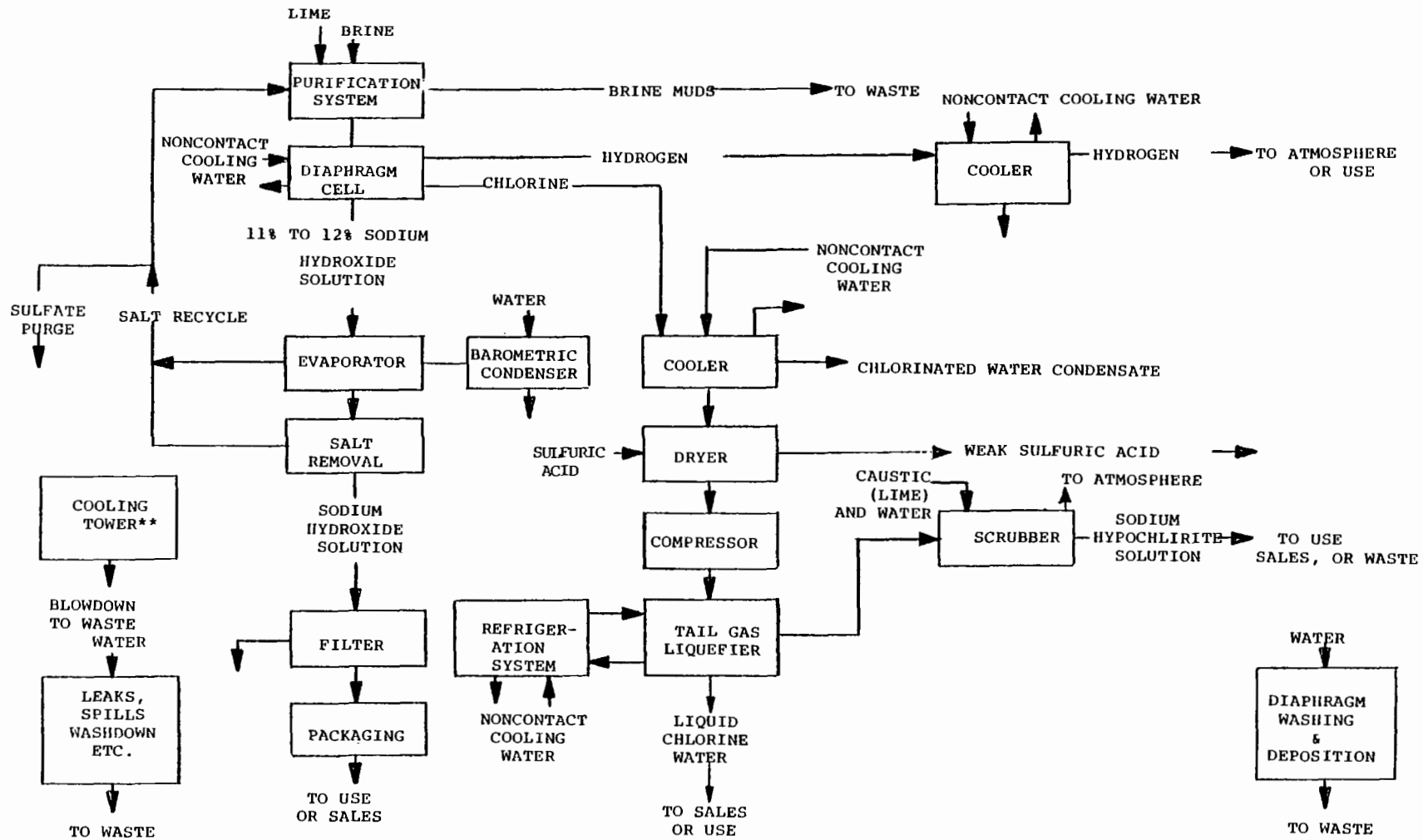

*USED SOME PLANTS ONLY
**DEPENDS UPON PLANT DESIGN

Figure 11-10 General process flow diagram for production of chlorine/caustic by diaphragm cells.

TABLE 11-23. DATA OF WATER USAGE FOR BAROMETRIC CONDENSER IN CHLORINE/ CAUSTIC PLANTS USING DIAPHRAGM CELLS

Plant	Water usage m^3/kkg of Cl_2
#207	115
#858	89
#736	191

Discharges from the barometric condensers contain some salt and caustic as a result of the carryover from the caustic solution. When graphite anodes are used, the barometric condenser waste water contains lead.

Sulfate Purge Waste Water - During concentration of the caustic by evaporation, sodium chloride precipitates out. The salt is removed and is washed with water to remove sodium sulfate. A portion of wash water is recycled and the rest is purged to waste in order to stop the buildup of sulfates. The stream is one of the major sources of waste water from chlorine/caustic plants using diaphragm cells.

Control and Treatment Practices

Diaphragm Cell Plants Visited and Sampled

Waste water streams were sampled and analyzed for priority pollutants in the screening and verification phase of the sampling program. The waste water streams at Plant #014 were sampled during screening, while Plants #261, #738, #967 and #736 were sampled in the verification phase.

At Plant #014, the chlorine condensate is stripped with steam to remove and recover chlorine. The brine precipitates (muds) are land disposed, while the spent sulfuric acid and scrubber solutions are used at an adjacent plant. The condensate from the hydrogen cooler is used as makeup water for a cooling tower system, and the condensate from the evaporative concentration of sodium hydroxide is used to dissolve salt reclaimed from the concentration process. The cell washings are sent to a collection pond where asbestos and other suspended solids are removed. In Figure 11-11 the general process flow sheet is presented. The waste streams sampled and their waste loadings are given in Table 11-24.

At Plant #261, the cathode wash water is passed through a filter and the asbestos is disposed of in a landfill while the filtrate goes to the sewer. The caustic liquor from the cells goes to multiple-effect evaporators. The water vapor from the evaporators is sent to a barometric condenser from which waste water is produced. The caustic and salt are both concentrated further. Figure 11-12 shows the process flow diagram and all sampling points. Table 11-24 gives waste stream flows and loadings.

Plant #738 has two production lines, 738A and 738B, that are almost identical. At the new plant (738B), there is no concentration of the NaOH to 73 percent strength nor is the waste from the chlorine disposal system scrubbed. Also, the inert gases from the liquefaction step are put through the chloride

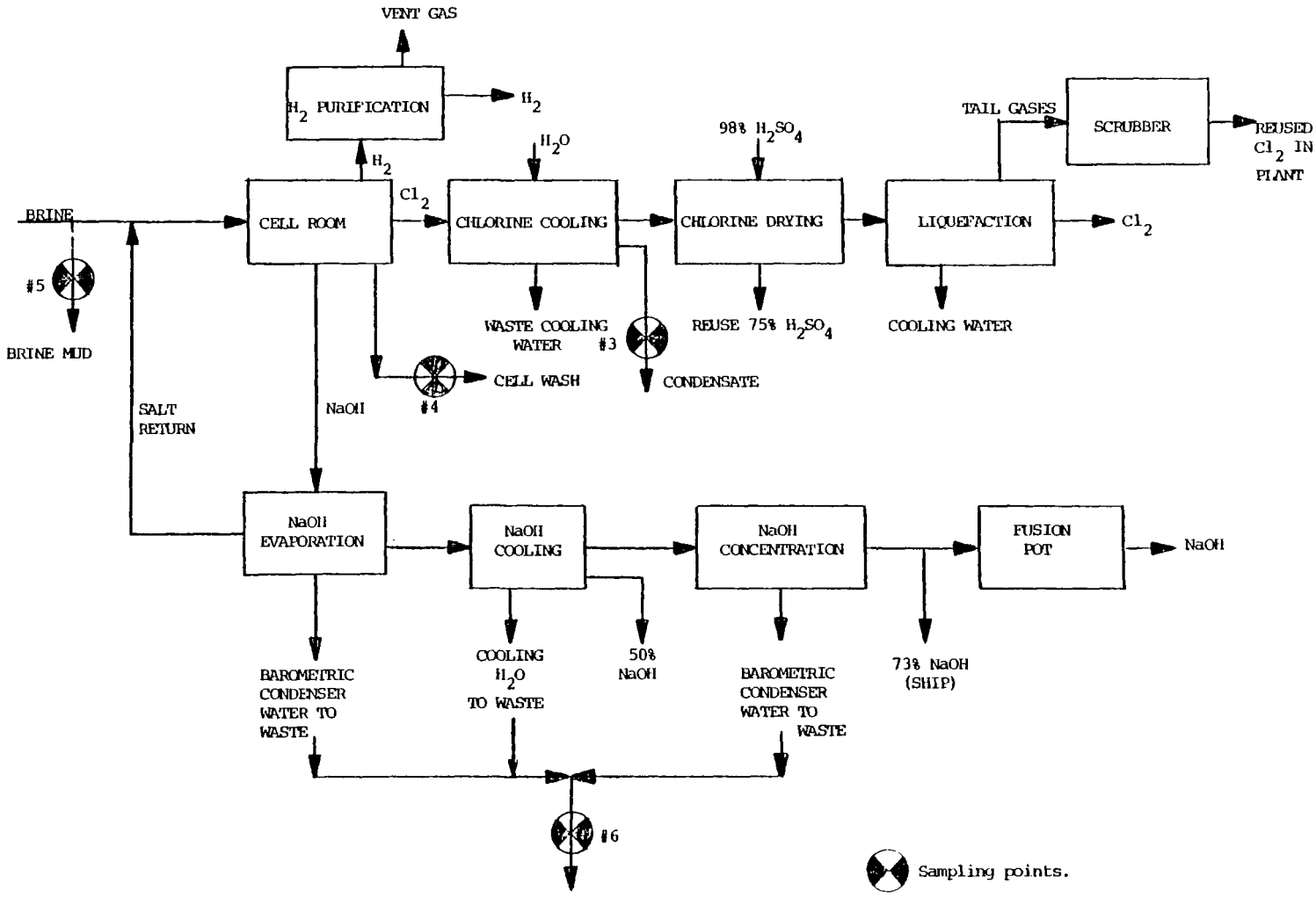

Figure 11-11. General process flow diagram at Plant #001 showing the sampling points. Chlorine/Caustic (Diaphragm Cell) Manufacture

TABLE 11-24 FLOW AND POLLUTANT CONCENTRATION DATA OF THE SAMPLED WASTE STREAMS FOR PLANTS #277, #261, AND #738 PRODUCING CHLORINE/CAUSTIC BY DIAPHRAGM CELLS

Plant	Sampled Stream No.	Stream Description	Flow m^3/kkg of Cl_2	SS Load kg/kkg of Cl_2	Pb Load kg/kkg of Cl_2	Asbestos Load kg/kkg of Cl_2
#277	3	Chlorine Condensate	0.9	1.35×10^{-3}	4.95×10^{-6}	NA
	4	Cell Wash	0.015	0.024	3.9×10^{-6}	NA
	5	Brine Mud	0.018	NA	1.3×10^{-5}	NA
	6	Barometric Condensate	306	3.64	1.5×10^{-3}	NA
#261	1	Brine Mud	0.832	NA	2.88×10^{-4}	0.117
	2	Cell Wash	0.384	0.183	0.100	0.07
	3	Asbestos Filtrate	NA	(9 mg/l)*	(0.075 mg/l)*	(0.14 mg/l)*
	4	Asbestos Filtrate Cake	NA	NA	(42.4 mg/l)*	NA
	5	Barometric Condenser	NA	(6 mg/l)*	(<0.01 mg/l)*	NA
#738	1	Cell Room Waste	0.0682	1.4×10^{-3}	5.25×10^{-6}	NA
	2	Asbestos Wash	0.165	8.4×10^{-3}	5.15×10^{-6}	NA
	3	Scrubber (Hypo)	0.124	3.5×10^{-2}	1.88×10^{-5}	NA
	4	Chlorine Cooling Water (H_2SO_4)	0.478	1.4×10^{-2}	9.9×10^{-6}	NA
	5	Caustic Cooling Tower	249.1	10.48	0.127	NA
#738	6	Cell Room Waste	0.0589	5.3×10^{-3}	1.97×10^{-6}	NA
	7	Asbestos Wash	0.142	9.4×10^{-3}	1.62×10^{-5}	NA
	8	Scrubber (Hypo)	0.107	1×10^{-2}	2.4×10^{-5}	NA
	9	Chlorine Cooling Water (H_2SO_4)	0.413	5.7×10^{-3}	8.04×10^{-5}	NA

TABLE 11-24 continued

Plant	Sampled Stream Stream No.	Description	Flow m^3/kkg of Cl_2	SS Load kg/kkg of Cl_2	Pb Load kg/kkg of Cl_2	Asbestos Load kg/kkg of Cl_2
#738	10	Caustic Cooling Tower	215.1	1.0	$<2.2 \times 10^{-3}$	NA
	11	Chlorate Sump	0.28	0.009	$<2.8 \times 10^{-6}$	NA
	12	Plant Effluent	0.46	0.028	5.3×10^{-5}	NA
	13	Final Effluent (Total)	NA	(64 mg/l)*	(1078 mg/l)*	NA
	14	Brine Mud	NA	(2.70×10^{-5} mg/l)*	(<0.01 mg/l)*	NA

NA = Not Available

* Flow of the sampled stream is not available so the concentration is given in mg/l.

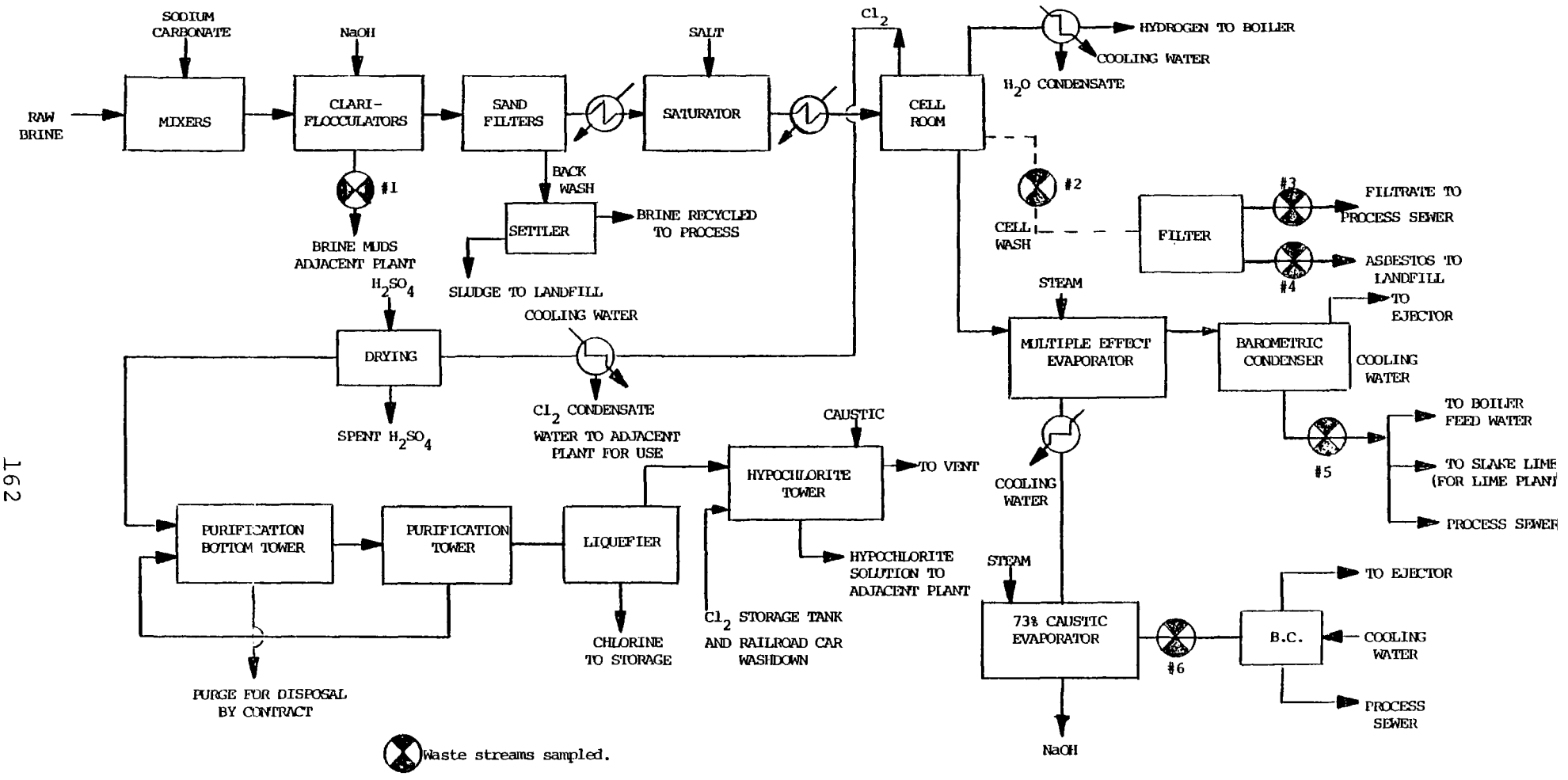

Figure 11-12. General process flow diagram at Plant #261 showing the sampling points. Chlorine/Caustic (Diaphragm Cell) Manufacture

disposal system. Table 11-24 shows the sampled waste streams and their loadings for both plants. The process flow sheets are shown in Figure 11-13 and 11-14.

Plant #967 uses graphite anodes in its diaphragm cells. The cell washings at this plant are sent to an asbestos pond that has a continuous cover of water. Periodically, the settled solids are removed, sealed in drums and disposed of in a landfill. The overflow from the pond is treated with soda ash to precipitate lead, and then with sulfuric acid to bring the pH down to 6-9 range. It is then finally settled. Table 11-25 shows the waste streams sampled and waste loadings for this plant. Figure 11-15 is a general process flow diagram for Plant #967.

Plant #736 has installed de-misters to control the vapors evolved from the last stage of the evaporator during the concentration of caustic. In this treatment, the steam evolved from the concentration of cell liquors passes through metal wool filters to reduce entrained solids. The cell room washings are sent to a settling chamber and the settled asbestos is sent to a landfill. The other waste waters, consisting of caustic evaporator washings and wastes from salt separation, brine purification operations, and caustic filtration backwash waters, are combined and sent to one of two settling ponds. Skimming devices on the settling ponds remove any oil that separates, while the settled solids in the ponds are dredged and disposed of in an abandoned brine well. Figure 11-16 shows the process flow diagram and sampling points. Table 11-25 gives the pollutant loadings of the streams sampled.

Treatment Practices-Diaphragm cell - Waste water treatment practices are available for few plants. Unless otherwise specified, the plants described use metal anodes in their cells.

At Plant #999, the brine mud and other suspended solid streams are collected and filtered in leaf filters. The cake is disposed of in a landfill and the brine filtrate returned to the brine system.

At Plant #326, the waste water from chlorine diaphragm cell plants is combined with other process waste waters. The combined waste water is sent to the first of two settling tanks in series.

In one of the settling tanks, skimmers have been installed to remove oil and the overflow from the second is filtered before discharge.

At Plant #589, the brine mud from the clarifier underflow is sent to a brine mud settling pond. The overflow, which is mostly brine, is returned to the process. The cell room washings are sent to a settling pit and the settled asbestos fibers are removed by the use of a vacuum truck, and disposed of in a

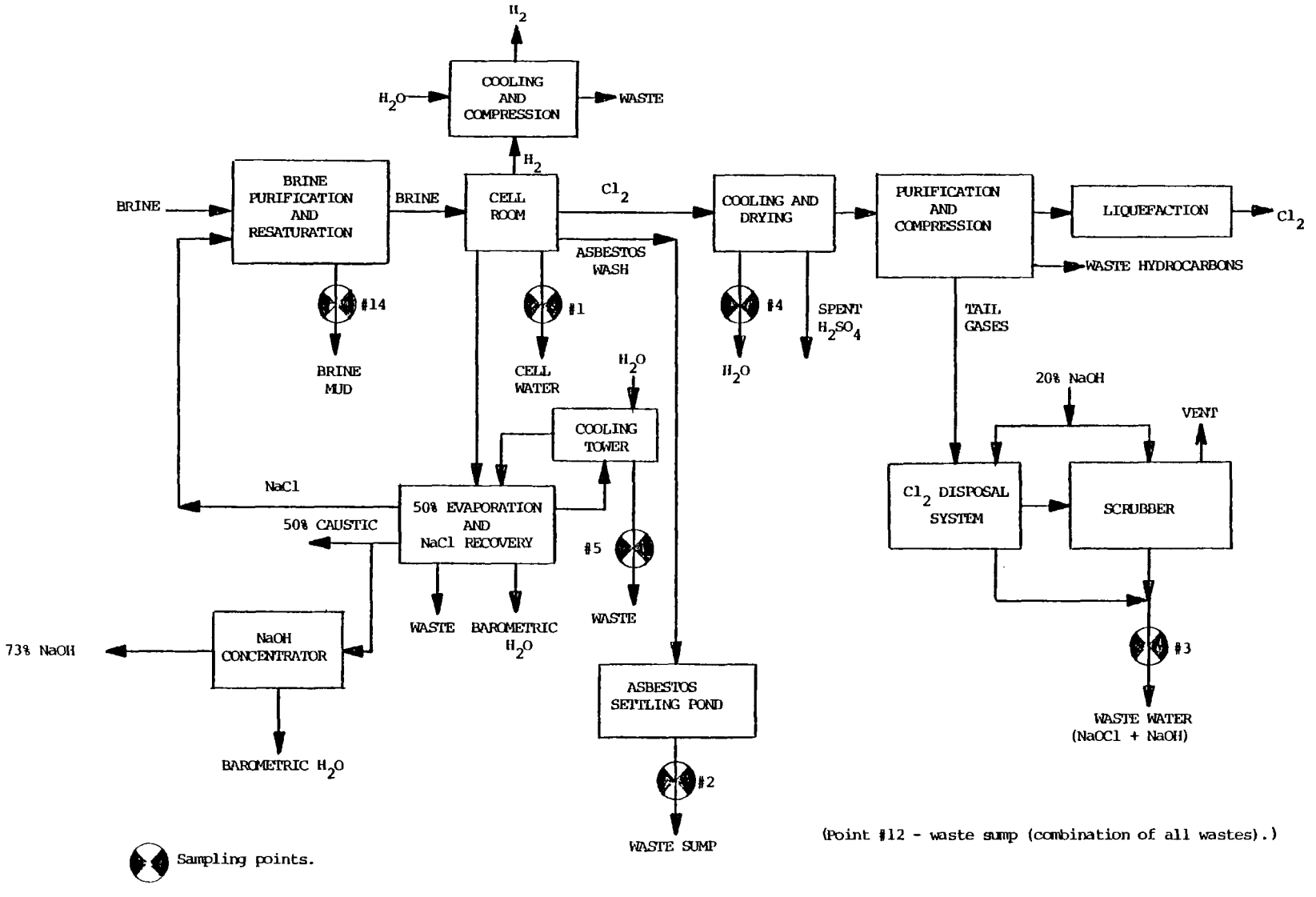

Figure 11-13. General process flowsheet at Plant #738 showing the sampling points.
Chlorine/Caustic (Diaphragm Cell) Manufacture

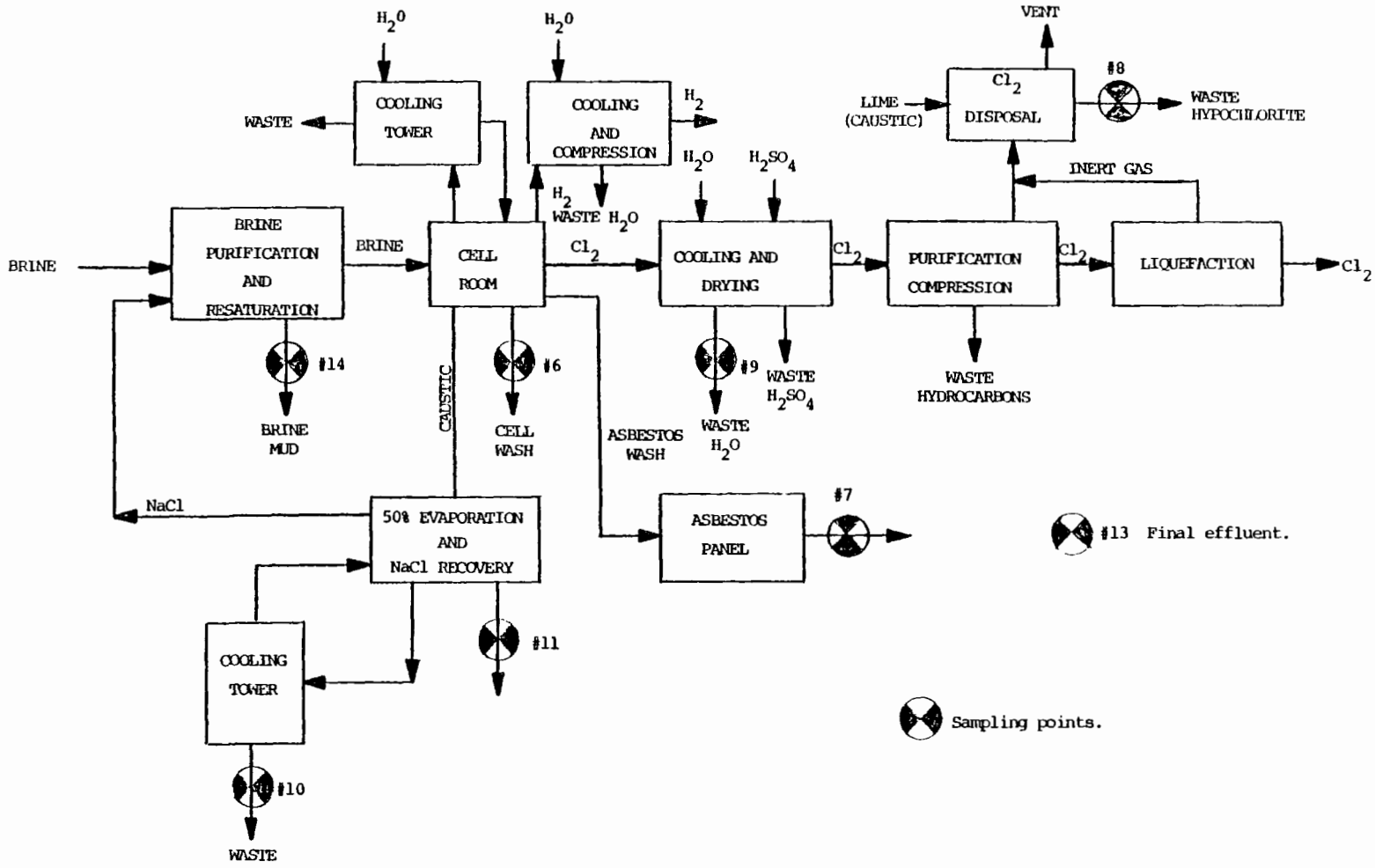

Figure 11-14. General process flow diagram at Plant #738 showing the sampling points.
Chlorine/Caustic (Diaphragm Cell) Manufacture

TABLE 11-25 FLOW AND POLLUTANT CONCENTRATION DATA OF THE SAMPLED WASTE STREAMS FOR PLANTS #967 AND #736 PRODUCING CHLORINE BY DIAPHRAGM CELL

Plant	Sampled Stream No.	Stream Description	Flow m^3/kkg of Cl_2	SS Load kg/kkg of Cl_2	Pb Load kg/kkg of Cl_2	Asbestos Load kg/kkg of Cl_2
#967	1	Cell Building Wastes	0.18	0.187	0.12	7.5×10^{-5}
	2	Lead Pond Effluent	0.55	0.03	0.016	1.56×10^{-5}
	3	Caustic Plant Effluent	5.38	0.841	0.014	7.6×10^{-4}
	4	Brine Filter Back Wash	0.45	5.75	2×10^{-4}	1.8×10^{-6}
	5	Cell Wash	0.18	0.05	8.6×10^{-3}	6.6×10^{-4}
	6	Condensate And Spent H_2SO_4	0.79	0.85	7.3×10^{-4}	9.8×10^{-6}
#736	1	Cell Wash	0.652	0.06	9.1×10^{-7}	NA
	2	Cell Room Drain	0.0163	4.62×10^{-3}	2.75×10^{-6}	0.085×10^{-6}
	3	Brine Mud	1.631	32.621	3.1×10^{-5}	NA
	4	50% Barometric Condenser	NA	(32 mg/l)*	(<0.01 mg/l)*	(1×10^{-4} mg/l)*
	5	70% Barometric Condenser	NA	(20 mg/l)*	(<0.01 mg/l)*	(1×10^{-4} mg/l)*
	6	95% Barometric Condenser	NA	(90 mg/l)*	(0.01 mg/l)*	(4×10^{-11} mg/l)*
	7	Chlorine Condenser	0.163	3.9×10^{-4}	1.63×10^{-6}	NA

* Flow of the sampled stream is not available so the pollutant concentration is given as mg/l.
NA = Not Analyzed.

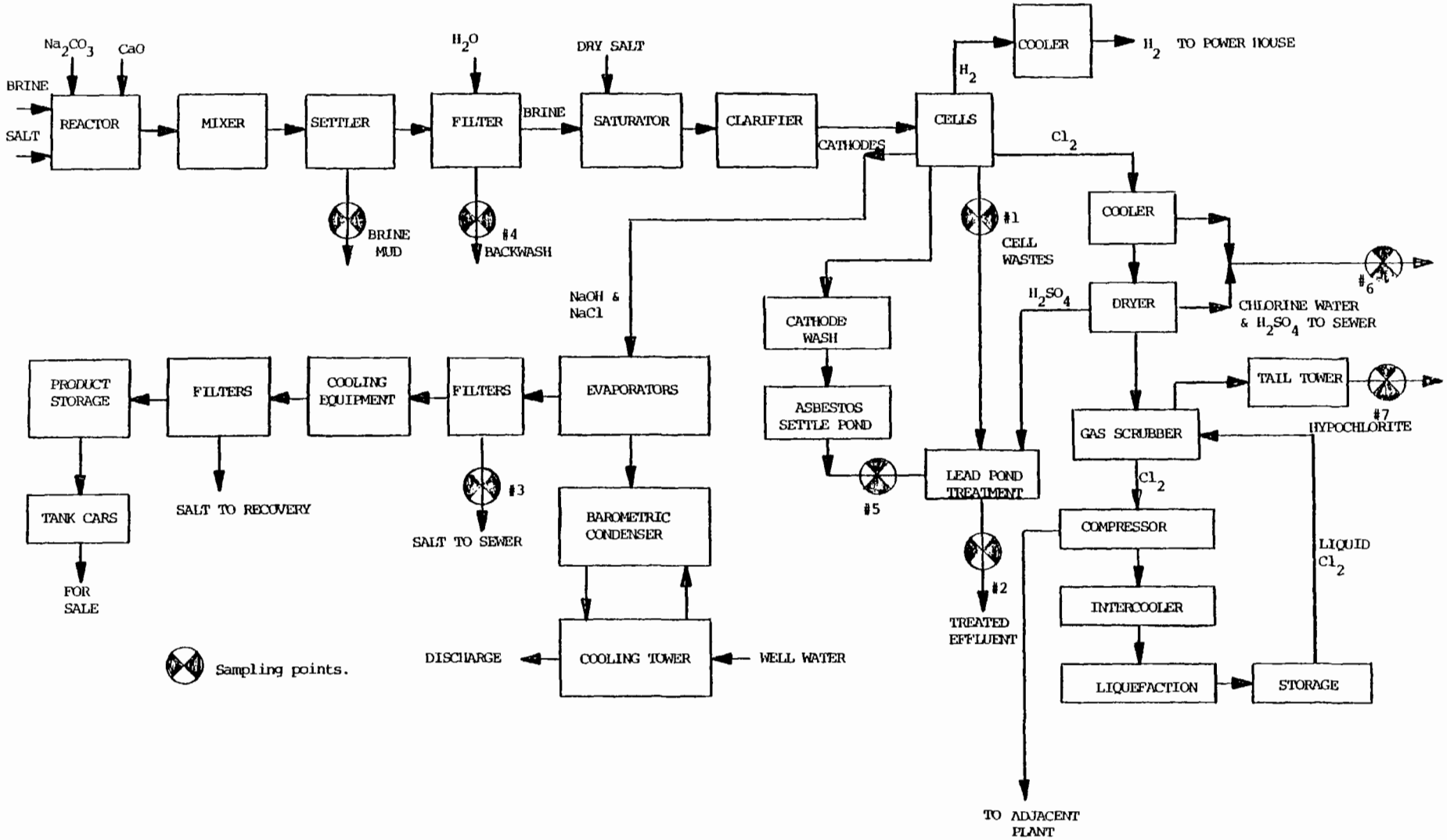

Figure 11-15. General process flow diagram at Plant #967 showing the sampling points.
Chlorine/Caustic (Diaphragm Cell) Manufacture

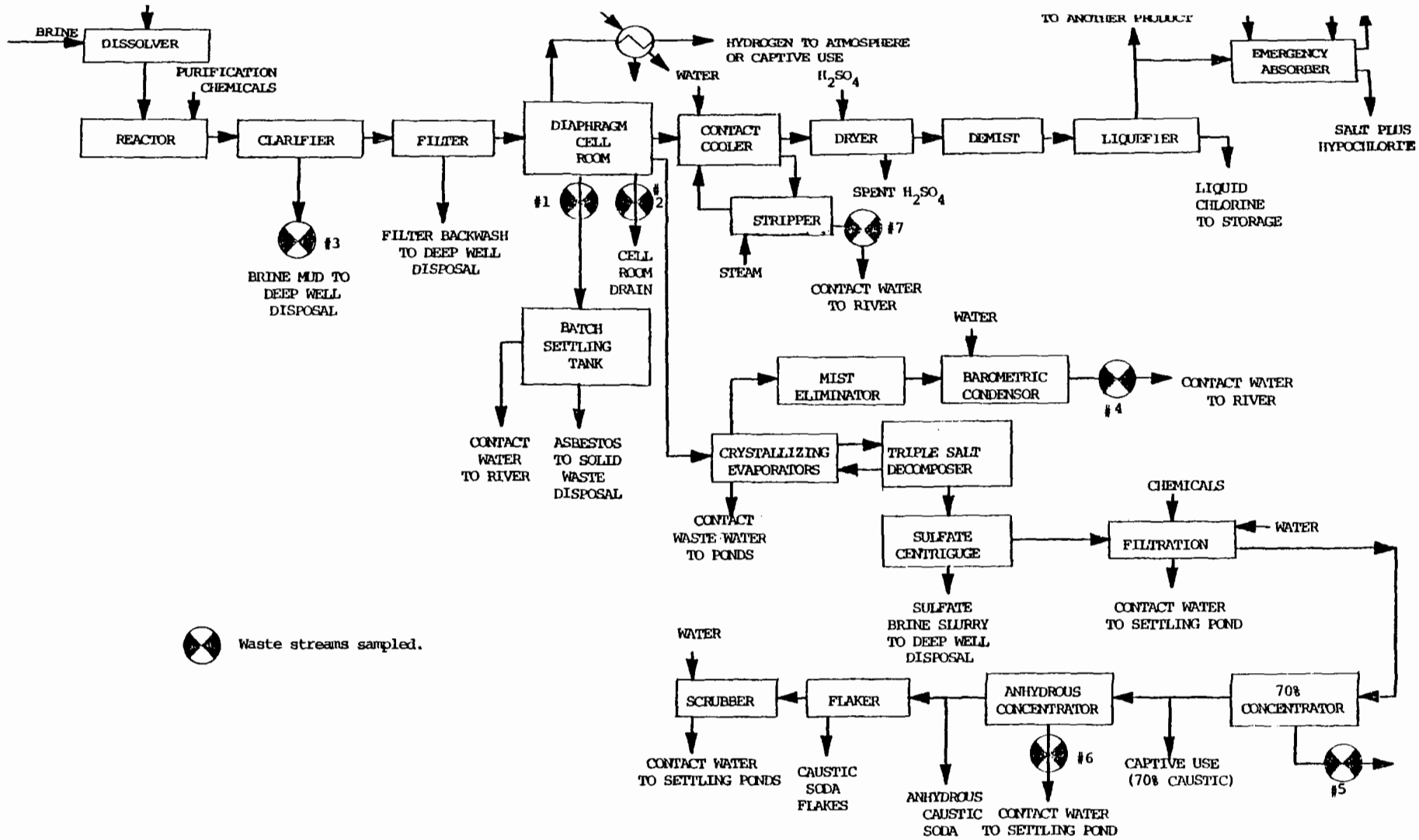

Figure 11-16. General process flow diagram at Plant #736 showing the sampling points.
Chlorine/Caustic (Diaphragm Cell) Manufacture

landfill. The chlorine from the cells is contact cooled with the tail gas scrubber water. The resulting waste water is steam stripped for chlorine recovery before discharge.

At Plant #741, chlorine, caustic soda, and potassium hydroxide are produced using both mercury and diaphragm cells. Mercury-bearing effluent at this facility is treated by sulfide precipitation. Tail gas absorption wastes are treated by catalytic decomposition by a process which consists of scrubbing with caustic soda treating solution and treating the resulting hypochlorite solution with nickel chloride and iron chloride catalysts. Decomposition proceeds relatively slowly. Consumption of iron and nickel chloride is approximately equal and consists of 0.01 kilogram per metric ton of chlorine produced. Wastes are retained in the treatment tanks for approximately three days, after which time no residual chlorine is reported to be present in the discharge (3).

Chlorinated organic hydrocarbons - The use of graphite anodes, in either mercury cell or diaphragm cell plants, results in the generation of a variety of simple chlorinated hydrocarbon compounds as a result of the attack of chlorine on the anodes. These compounds are carried out of the cell with the chlorine and find their way into the various waste streams which originate from the chlorine cooling, drying, compression and liquefaction steps. In cases such as Plant #967 where the end use of the product chlorine is captive involving its direct application to the manufacture of a chlorinated organic product, the bulk of chlorinated organic impurities are not removed from the chlorine. Table 11-22 shows the raw waste loadings of organic compounds found in the chlorine condensate waste stream at Plant #967. In a flow of approximately 320 m3/day, the total organic raw waste load was found to be 0.78 kg/day. The amount of carbon tetrachloride alone was 0.066 kg/day at a concentration of approximately 0.2 mg/l. At Plant #195, where a purified product is required, the chlorinated organics are accumulated in the reboiler of the chlorine tracifier (chlorine scrubber). The tracifier residues are treated batchwise for separation and recovery of the organic phase materials which are sold as feed stock for the manufacture of related products. Prior to discharge, the aqueous phase is vacuum stripped to remove and recycle additional chlorinated organics and chlorine. Normally, one batch of organics is treated per week. After separating each batch of organics and stripping the residual aqueous phase, the quantity of waste water discharged is approximately 5.7 m3/week or 0.8 m3/day. The organic loading in this waste is not known, however, if the assumption is made that the discharge is saturated with CCl_4 (800 mg/l @ 20 degrees C), the waste load would be 0.5 kg/day.

Although the daily mass emissions from the two plants are likely to be similar and both would require additional treatment

to achieve acceptable discharge levels, the wide difference in concentrations of the chlorinated organics as well as the manner in which they are handled, would necessitate the application of an advanced treatment technology specifically suited to each case.

Where the flow is large and the concentrations are low, the application of activated carbon adsorption to the collected organic-bearing waste stream at Plant #967 would be capable of reducing a CCl_4 mass emission from 0.066 kg/day to approximately 0.03 kg/day, assuming a treatability level of 0.10 mg/l.

In the case of Plant #195, where the volume of waste water is small but the concentrations of residual chlorinated organics can be in the order of several hundred ppm, a more appropriate final removal technology would be steam stripping with an overhead return to the process. Assuming a treatability level of 10 mg/l for CCl_4 using this technology, its mass emission could be reduced to approximately 0.01 kg/day.

The additional costs for steam stripping in a plant (such as Plant #195) which already has a vacuum vaporizer, would be under $10,000 for modification of the existing equipment. Steam costs could vary from $1,000 to $5,000 per year. If a vaporizer is not in place, a steam stripper to process 5 to 30 m3/week would cost roughly $50,000 to $100,000, depending on the input concentrations to be handled. The corresponding steam costs would range from $2,000 to $10,000 per year.

The capital costs of an activated carbon adsorption unit for handling the relatively high volume wastes with a low influent organic loading (as found at Plant #967) cannot be reliably estimated in the absence of specific treatability data on the waste streams in question.

A process evaluation should be made to determine the most efficient means of isolating and collecting the organic bearing waste streams prior to treatment.

Alternatively, incineration of the chlorinated organic residuals is an effective means of destroying and disposing of this material provided that adequate measures are taken to control the release of HCl to the atmosphere.

Evaulation of Industry Production and Waste Flow Data

In the diaphragm cell plants, the waste in many plants is segregated into four different streams. The brine mud which contains a large amount of suspended solids is either sent to a lagoon or filtered and the clear liquid recycled for brine recovery. The solids content in the brine mud was found to vary

from 2 to 20 percent. The second segregated waste stream is the chlorine-contaminated waste water. The third segregated waste is the cell wash. It includes the waste water from washing of cells, cathode wash and diaphragm rebuilding areas, and leaks and spills in the chlorine cell room. This stream contains asbestos either in fiber form or stabilized sheets in the waste water. The last segregated waste stream is known as the process waste water. Metals like lead and nickel may be found in small quantities in this stream. It is a combined waste which consists of streams like brine and caustic filter backwash, sulfate purge, etc. A further breakdown of the individual segregated waste streams is not available. In plants using graphite anodes, this waste stream contains a significant amount of lead. Table 11-26 gives the flow of the segregated waste streams for plants whose data are available.

Process Modifications and Technology Transfer Options

Cooling Water - The vapors from the evaporative concentration of caustic soda (in diaphragm cells) are either contact cooled or cooled in surface condensers. Plants practicing contact cooling through barometric condensers generate large amounts of waste water. The barometric condenser water is subject to contamination with caustic and salt. By changing from contact cooling of the vapors to noncontact cooling, the amount of waste water generated can be reduced considerably. If the change is expensive or is not feasible, then de-misters or similar control devices need to be installed to reduce the salt and caustic carryover in the vapors. Similarly, if a plant has a barometric condenser on the brine dechlorinator, it can be replaced with an indirect condenser to achieve a reduction of waste water and recovery of mercury in a mercury cell plant.

Anode Material - In the majority of cases, in both mercury and diaphragm cells, the anodes have been changed from graphite to metal. The use of metal anodes increases the cell current efficiency and eliminates or reduces considerably the chlorinated organic compounds and lead in the waste waters. The metal anodes consist of an expanded titanium metal substrate coated with precious metal and rare earth oxides.

Diaphragm Material - The use of modified diaphragms produces beneficial effects in power consumption and environmental controls. The three modified diaphragms available, polymer modified asbestos, polymer membrane, and ion exchange membrane, are discussed briefly below.

A. Polymer Modified Asbestos: This consists of a polymer-treated asbestos diaphragm baked into place on the cathode. Its usage results in power savings and has a minor environmental benefit, since, at the time of rebuilding of the cathodes, the

TABLE 11-26. WASTE FLOW DATA FOR CHLORINE/CAUSTIC SUBCATEGORY USING DIAPHRAGM CELLS

Stream Description	Plant	Unit Flow m^3/kkg of chlorine
Brine mud	#858	0.417
	#967	0.277
	#736	1.68
Cell wash	#858	0.084
	#736	0.0168
	#589	0.05
Tail gas scrubber effluent (hypochlorite solution)	#858	0.167
	#967	0.29
	#967	0.105

discarded material is produced in stabilized pieces instead of loose asbestos fibers. The disposal is thus safer and easier.

B. Polymer Membrane: This consists of microporous teflon-type polymer, and its operation has been demonstrated successfully in laboratory and pilot plant scale cells. In addition to the benefits of cost savings through energy use reduction and longer life, its use eliminates the handling and disposal problems associated with asbestos.

C. Ion Exchange Membrane: These membranes allow the transfer of positive ions to the cathodes and prevent the transfer of negative ions to the anodes, thus allowing production of a concentrated caustic similar to that produced by mercury cells. The production of salt-free concentrated caustic will reduce the waste water associated with the caustic evaporation process. Dupont's Nafion is the most successful membrane available in the United States, and a pilot plant producing 12 tons per day of chlorine is operating successfully using this membrane. Like the polymer membranes, the problems associated with the handling and disposal of asbestos are eliminated. Use and commercialization of the membrane is anticipated in the near future. The longer life of the membrane will reduce the waste waters associated with the rebuilding operation.

Model Plant and BPT Treatment Systems Specifications

Diaphragm Cell Plants - The specified BPT treatment for the chlorine/caustic plants using diaphragm cells consists of:

A. Asbestos removal (from cell washing) by alum coagulation and settling, followed by filtration and land disposal of the solids.

B. Partial recycle of the brine waste stream to process.

C. Lagoon settling of the brine mud and long-term storage at site.

D. Incidental heavy metal removal resulting from use of soda ash to promote flocculation.

Currently, about 65 percent of the total chlorine produced in the United States is made by diaphragm production. Data is available for 62 percent of the total diaphragm cell chlorine/caustic producers. The production at industrial plants ranges from a minimum of about 15,000 kkg of chlorine/yr to a maximum of 1,500,000 kkg of chlorine/yr. Because of the large number of plants in the subcategory and wide range of production levels, three model plants with production capacities of 19,100, 95,500 and 191,000 kkg of chlorine/yr were selected to represent

the production range of plants for which data is available. The flow per unit of production remains the same for each model.

A. Waste Water Flow: The waste streams are segregated into brine mud, cell wash and process waste. The brine waste is settled in ponds and the overflow is recycled to the process. The unit brine mud flow was taken as 0.42 m3/kkg of chlorine containing 10 percent suspended solids. The cell wash, which includes the wash waters, leaks and spills from the cell rooms, is sent to a holding tank and is mixed with the other process waste water for metal treatment and pH adjustment. The cell wash is segregated because it has asbestos as suspended material in it. The asbestos content was taken as 0.825 kg/kkg in the cell wash. A unit cell wash flow of 0.07 m3/kkg of chlorine was taken for the model plants. The process waste water stream, which includes the brine and caustic filter backwash, sulfate purge liquid, etc., was taken as 0.77 m3/kkg of chlorine produced.

B. Chemicals used: Soda and alum are added for flocculation and metal precipitation (as basic carbonates). The metals treated or removed include nickel, chromium, copper, and lead. The soda ash dosage was assumed to be 100 ppm on the waste flow which is equivalent to 0.084 kg of soda ash/kkg of chlorine.

Alum was assumed to be added in the amount of 0.14 kg/kkg of chlorine product as a flocculating agent.

C. Solid waste: The brine mud constitutes the major source of solid wastes from the process/treatment system. The other source of solid wastes includes the asbestos from the diaphragm cells and the metals precipitated as basic carbonates and hydroxides. The total quantity of solids produced from the model treatment plants is 42.5 kg/kkg of chlorine.

11.4 TECHNOLOGY BASED POLLUTION ABATEMENT

11.4.1 Advanced Level Treatment Applications

Priority Pollutants to be Controlled

Existing regulations on diaphragm cell graphite anode chlorine plants call for lead to be less than 0.0025 kg/kkg as a 30-day average. Other priority pollutants to be controlled include asbestos, trace metals, and chlorinated organics.

Removal Mechanisms Available

Asbestos particles can be trapped in a chemical floc, settled and filtered. Possible alternate metal removal methods include ion exchange and xanthate precipitation. Membrane separation is not a viable alternative.

Selection of Appropriate Technology

Diaphragm Cell - BPT (Level 1) - Chemical coagulation with alum is used to trap and settle suspended asbestos. Other wastes containing toxic metals are then added, and soda ash is used to precipitate the metals as metallic carbonates and hydroxides, followed by settling and sludge separation. This two-stage Level 1 process provides gravity settling of asbestos-containing waste and broadly controls heavy metals.

Diaphragm Cell - Level 2 - Dual media filtration is added to the BPT system.

Diaphragm Cell - Level 3 - A higher degree of metal removal is provide provided by introducing sulfide precipitation ahead of dual media filtration. This process involves only minor equipment and chemical costs to achieve best available heavy metal removal technology at reasonable cost. Ion exchange, xanthate and membrane processes were not chosen for the same reasons given under the mercury cell process.

Flow Diagrams

Flow diagrams for treatment of multiple waste streams from the diaphgram cell process are shown by Figure 11-17 (Level 1), Figure 11-18 (Level 2), and Figure 11-19 (Level 3).

Description of Each Treatment Level

Equipment Function - In the diaphragm cell waste water treatment process conventional alum flocculation, settling, and dual media filtration are used for asbestos separation. Conventional sludge dewatering by filter press is used to dewater the asbestos sludge before hauling, and the dual media filter back wash is returned to the influent surge tank.

Level 2 treatment requires the addition of a reagent mixing tank and chemical solution feeder to introduce ferrous sulfide ahead of the Level 1 multi-media filter. All the equipment is conventional and readily available.

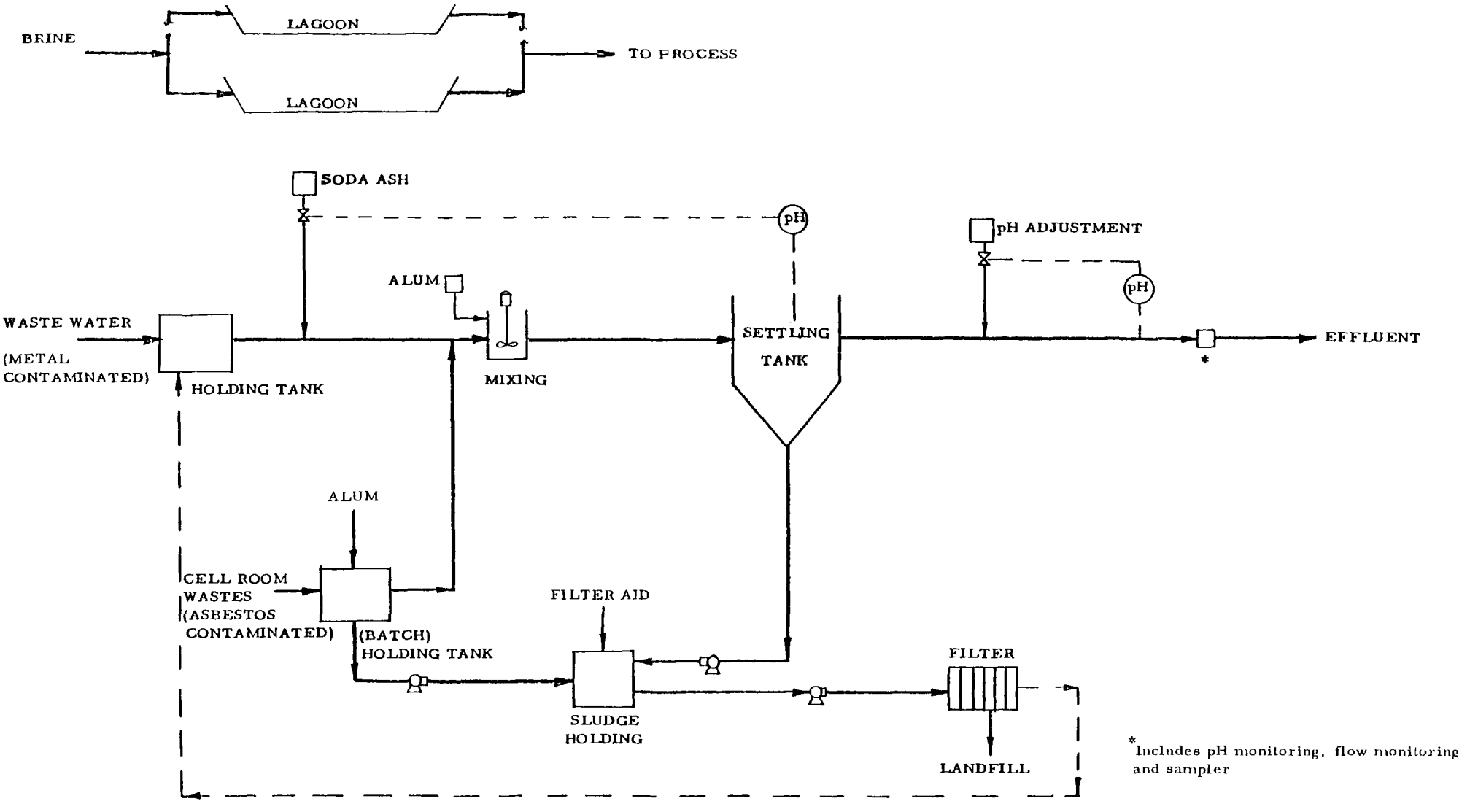

Figure 11-17. Waste water treatment Level 1 for chlorine - diaphragm cell subcategory.

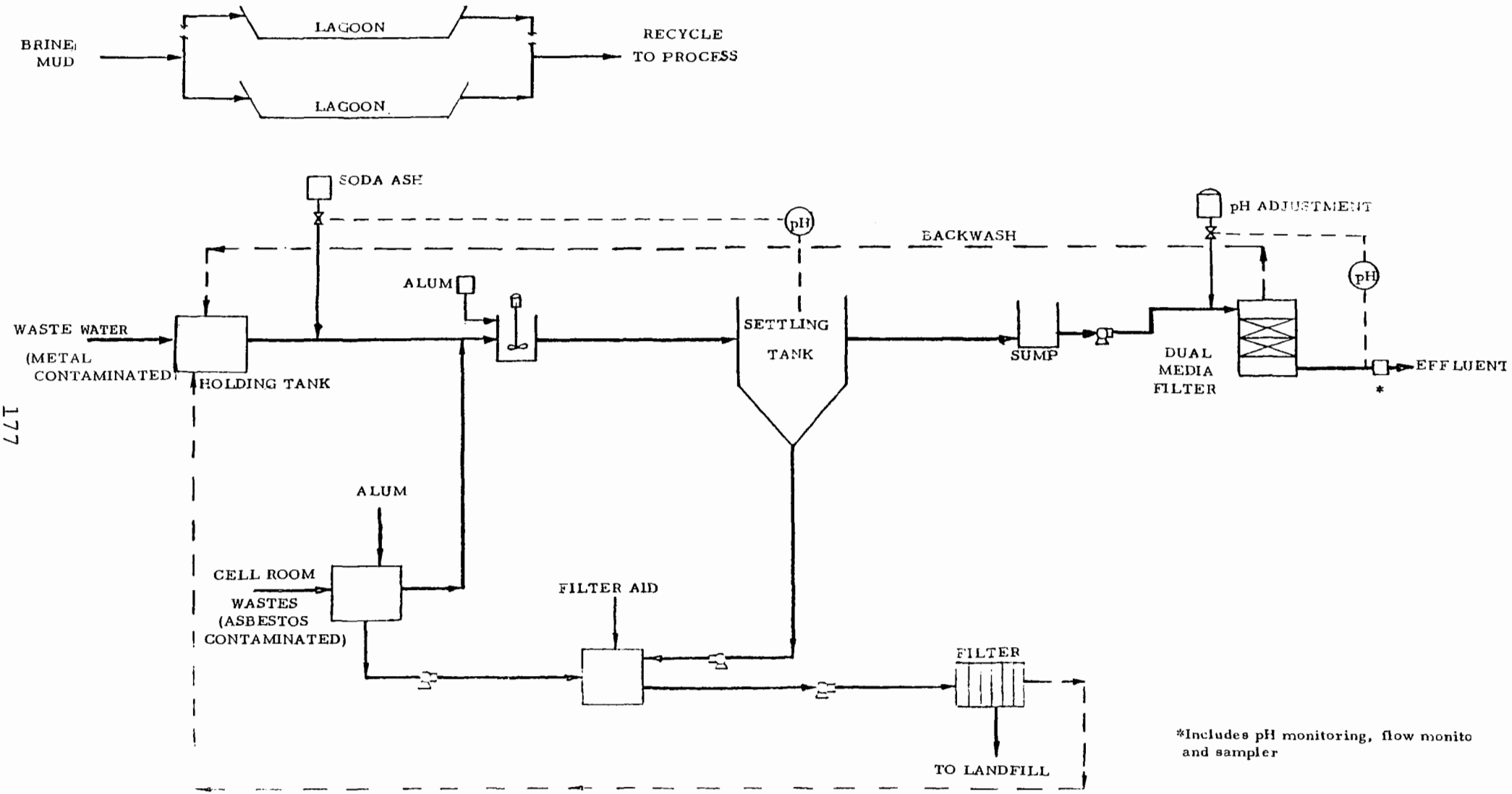

Figure 11-18. Waste water treatment Level 2 for chlorine - diaphragm cell subcategory

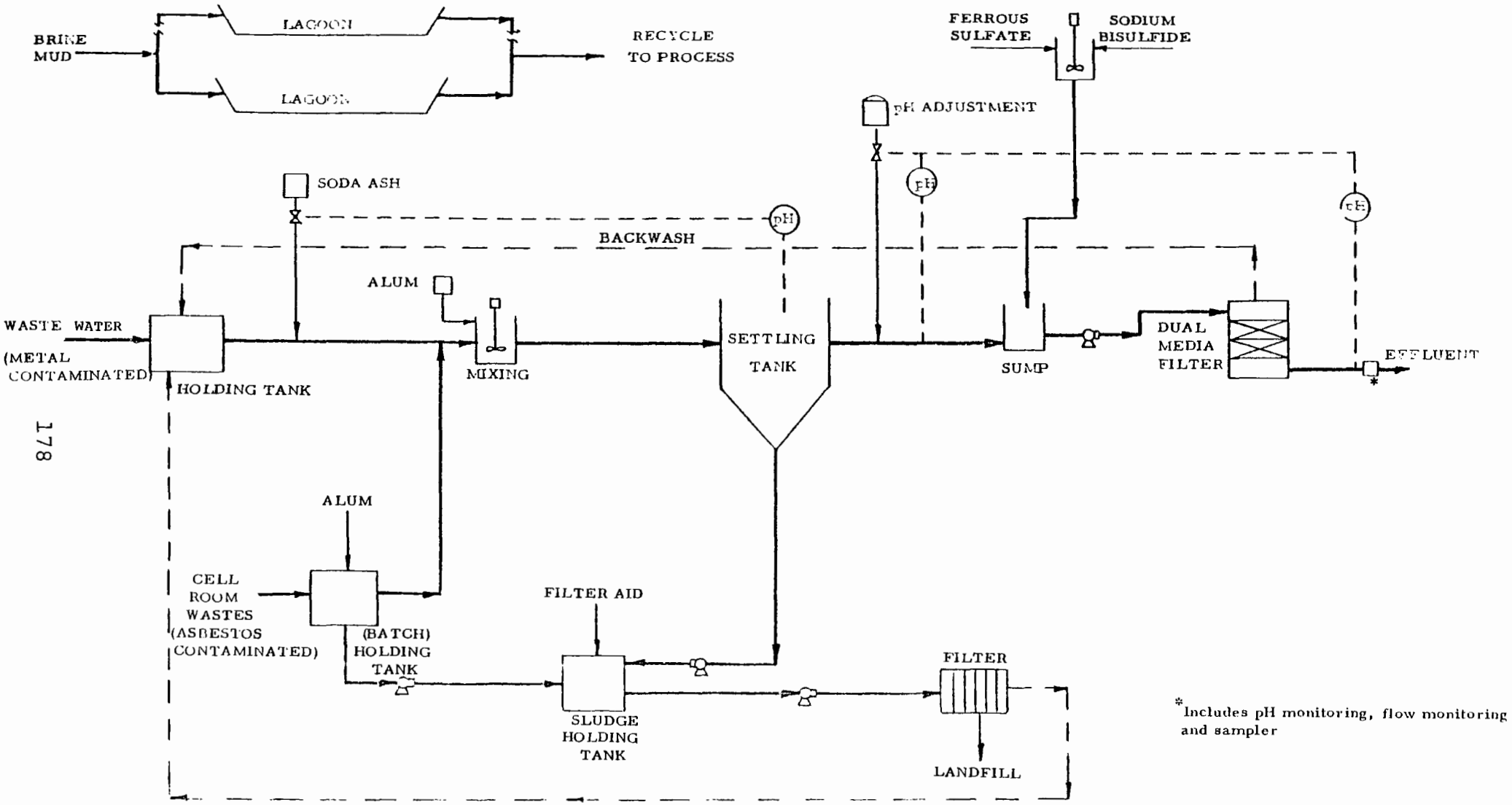

Figure 11-19. Waste water treatment Level 3 for chlorine - diaphragm cell subcategory.

Chemicals and handling - In the diaphragm cell waste water treatment process solutions of aluminum sulfate and sodium carbonate are fed with conventional equipment. Inert filter aid is used in the alum sludge filter process, and there ar no unusual hazards in the Level 1 treatment. At Level 2 the potential hazard in handling sodium sulfide is nullified by reacting it with ferrous sulfate to form ferrous sulfide, which then reacts with other residual heavy metals, leaving only excess ferrous sulfide in solution, which oxidizes to ferric sulfide and precipitates. At the point where sodium sulfide is reacted with ferrous sulfate good ventilation is essential, but with a proper excess of iron there is no subsequent hazard in handling the ferrous sulfide at pH levels involved in the process.

11.4.2 Estimated Performance of BPT Systems

Diaphragm Cell Plants - Asbestos, used as a diaphragm separating the cell anode and cathode, is the major pollutant consistently found in process wastes from diaphragm cell plants. It occurs primarily in wastes resulting from activities such as cell room washdown and cathode repairing. Because of the relatively recent concern about asbestos in waste waters, and because of uncertainties in analytical procedures, asbestos has not been regulated in plant discharges. The only control has been with suspended solids limitations.

Asbestos control is practiced at several plants. Generally, control consists of settling and/or filtering the waste water and disposing of the solids in sealed containers or simply by landfilling.

Lead, used as the electrical contact for graphite anodes, is the major pollutant found in process waste waters from diaphragm cell plants where graphite anodes are used. Conversion to metal anodes has largely eliminated the source of lead in raw wastes. Although not all diaphragm cell plants treat for lead removal, treatment usually consists of sulfide or carbonate precipitation and settling. Table 11-27 shows lead and suspended solids effluent loadings at several diaphragm cell plants. Both graphite and metal anode plants are shown.

BPT technology for waste water treatment and control at diaphragm cell chlorine plants has been specified as asbestos removal from wastes and containment of lead-bearing waste waters followed by carbonate precipitation and settling before discharge.

The pollutants previously regulated at diaphragm cell chlorine plants are suspended solids and lead. Priority pollutants other than lead that were found at significant concentrations in the screening and verification programs were

TABLE 11-27. EFFLUENT LOADINGS FROM SELECTED CHLOR-ALKALI DIAPHRAGM CELL PLANTS *

Plant	Lead Waste Load kg/kkg Average	Maximum
# 589 **	0.002	0.030
# 738 **	0.001	0.015
# 261 **	0.0025	0.019
# 014 **	0.006	-
# 967	0.0085	0.024
# 207	0.021	0.054

Plant	Suspended Solids Waste Load kg/kkg Average	Maximum
# 014 **	2.81	-
# 207	0.30	0.57

* See Reference 3

** Plants using metal anodes.

identified as antimony, arsenic, chromium, copper, and nickel.

Carbonate precipitation is known to be effective for removal of some trace metals. During the sampling programs, only one diaphragm cell plant employing this treatment for lead was visited. Table 11-28 presents the priority pollutant removal efficiencies and effluent loads observed during the sampling of that plant.

Base Level Performance Characteristics for BPT Pollutant Removal

Table 11-29 presents effluent quality achievable through implementation of BPT or Level 1 treatment technologies for and diaphragm cell chlorine plants.

Base Level Performance Characteristics for Priority Pollutant Removal

Also presented in Table 11-29 is the estimated achievable effluent qualities for priority pollutants with BPT technology. Not included are estimates for the removal of chlorinated organics or asbestos. Although only limited data are available, it is not anticipated that chlorinated organics will be reduced significantly with BPT treatment. Due to uncertainties in analytical procedures, achievable asbestos loads using BPT technology are being reserved at this time.

Pretreatment Applications

Several chlor-alkali plants presently discharge all or part of their process waste water to POTWs. Pollutants present in chlorine process wastes which require pretreatment include mercury, lead, and chlorine. In addition, some control of pH and suspended solids is required.

On the basis of the effluent quality achievable through the application of BPT technology, as presented above, BPT technology is also recommended for pretreatment.

11.4.3 Estimated Performance of Advanced Level Systems

Advanced Level Performance Estimates for BPT and Priority Pollutant Removal

The advanced treatment performance estimates presented below include estimates for chlorine discharges. Although this parameter was not regulated in previous guidelines, and most chlorine plants reuse or sell their chlorine-laden waste water, the technology for chlorine removal has recently been established

TABLE 11-28. PRIORITY POLLUTANT REMOVAL AT LEAD TREATMENT FACILITY PLANT# 967

Pollutant Flow = 1.0 m^3/kkg	Pollutant Loads kg/kkg Influent Average	Effluent Average	% Removal
Antimony, Sb	0.00078	0.00005	93.6
Arsenic, As	0.00032	0.00037*	--
Chromium, Cr	0.00016	0.00005	68.7
Copper, Cu	0.0049	0.00003	99.4
Mercury, Hg	0.000026	0.00005*	--
Nickel, Ni	0.00069	< 0.00005	>92.8
Zinc, Zn	0.0016	< 0.0001	>93.8
Lead, Pb	0.733	0.029	96.0
Thallium, Tl	< 0.00004	0.00015*	--

*Effluent is greater than influent.

TABLE 11-29 CONTROL PARAMETER LIMITATIONS
SUBCATEGORY: Chlorine - Diaphragm Cell
Level of Treatment: 1
Waste Water Flow: 12.8 m3/kkg

Pollutant	Subcategory Performance (mg/l)	(1) VFR	Quality Limit (mg/l)		Emission Limit (kg/kkg)	
			30 day Aver	24 hr Max	30 day Aver	24 hr Max
BPT Pollutants:						
Total Suspended Solids, TSS		2.0	37.5	75	0.48	0.96
Lead, Pb		2.0	0.6	1.2	0.008	0.016
Proposed Priority Pollutants						
Antimony, Sb	<0.05(2)	2.0	0.8	1.6	0.01	0.02
Arsenic, As	0.25(2)	2.0	0.5	1.0	0.006	0.012
Chromium, Cr	0.04(2)	2.0	0.1	0.2	0.0013	0.0026
Copper, Cu	0.03(2)	2.0	0.5	1.0	0.006	0.012
Nickel, Ni	0.05(2)	2.0	0.5	1.0	0.006	0.012

(1) - VFR: ratio of the 24 hour variability factor to the 30 day variability factor.
(2) Verification Sampling

for this subcategory and therefore achievable limitations are recommended.

Tables 11-30 and 11-31 present estimated achievable effluent quality through implementation of advanced technologies.

New Source Applications

Examination of the waste water control and treatment alternatives applicable to new chlor-alkali facilities has led to the following conclusions:

All new sources should incorporate metal anodes rather than graphite anodes. All new sources should provide for alternative uses or provide for decomposition of chlorine-bearing wastes.

Diaphragm cell plants should provide treatment equivalent to level 2 technology, providing better control of solids and lead.

Response to Remand Issues

Zero-discharge limitations originally proposed for chlor-alkali plants were remanded primarily because no plant was shown to achieve zero discharge. The proposed alternative advanced treatment levels provide for waste water discharge.

11.4.4 Cost Estimates

Discussion

On the basis of the model plant specifications and treatment system design concepts presented earlier, the estimated control costs for three production rates at diaphragm cell plants are given in Tables 11-32 through 11-34. The costs shown at each level of treatment correspond to the model plant BPT system (Level 1) and one or more alternative BAT systems (Level 2, 3, etc.) which may add to or modify the existing BPT system to meet more stringent priority pollutant removal requirements. The BAT systems also provide a higher effluent water quality with respect to the conventional and nonconventional parameters.

Annual treatment cost as a function of production rate is shown graphically in Figure 11-20. Similarly presented is the relationship of unit cost (treatment cost per metric ton of product) to production rate Figure 11-21. The estimated ranges of total unit costs are shown and Table 11-35 presents a summary of the unit cost distribution between amortization and operation and maintenance components.

TABLE 11-30 CONTROL PARAMETER LIMITATIONS
SUBCATEGORY: Chlorine - Diaphragm Cell
Level of Treatment: 2
Waste Water Flow: 12.8 m3/kkg

Pollutant	Treatability (mg/l)	VFR (1)	Quality Limit (mg/l)		Emission Limit (kg/kkg)	
			30 day Aver	24 hr Max	30 day Aver	24 hr Max
BPT Pollutants:						
Total Suspended Solids, TSS	15	2.0	15	30	0.19	0.38
Lead, Pb	0.3	2.0	0.3	0.6	0.004	0.008
Total Residual Chlorine, Cl2	0.2	2.0	0.2	0.4	0.0026	0.0052
Proposed Priority Pollutants						
Antimony, Sb	0.4	2.0	0.4	0.8	0.005	0.01
Arsenic, As	0.1	2.0	0.1	0.2	0.0013	0.0026
Chromium, Cr	0.05	2.0	0.05	0.1	0.0006	0.0013
Copper, Cu	0.1	2.0	0.1	0.2	0.0013	0.0026
Nickel, Ni	0.1	2.0	0.1	0.2	0.0013	0.0026

1 - VFR: ratio of the 24 hour variability factor to the 30 day variability factor.

TABLE 11-31 CONTROL PARAMETER LIMITATIONS
SUBCATEGORY: Chlorine - Diaphragm Cell
Level of Treatment: 3
Waste Water Flow: 12.8 m3/kkg

Pollutant	Treatability (mg/l)	VFR (1)	Quality Limit (mg/l)		Emission Limit (kg/kkg)	
			30 day Aver	24 hr Max	30 day Aver	24 hr Max
BPT Pollutants:						
Total Suspended Solids, TSS	15	2.0	15	30	0.19	0.38
Lead, Pb	0.2	2.0	0.2	0.4	0.0026	0.0052
Total Residual Chlorine, Cl2	0.2	2.0	0.2	0.4	0.0026	0.0052
Proposed Priority Pollutants						
Antimony, Sb	0.4	2.0	0.4	0.8	0.005	0.01
Arsenic, As	0.05	2.0	0.05	0.1	0.0006	0.0013
Chromium, Cr	0.05	2.0	0.05	0.1	0.0006	0.0013
Copper, Cu	0.05	2.0	0.05	0.1	0.0006	0.0013
Nickel, Ni	0.1	2.0	0.1	0.2	0.0013	0.0026

1 - VFR: ratio of the 24 hour variability factor to the 30 day variability factor.

TABLE 11-32 MODEL PLANT TREATMENT COSTS

Subcategory CHLORINE Diaphragm cell — Type of Regulation BAT

Production 19,100 metric tons per year (21,057 tons per year)
54 metric tons per day (60 tons per day)

Waste water flow 68 cubic meters per day.

	LEVEL OF TREATMENT*		
	FIRST	SECOND	THIRD
A. INVESTMENT COST			
Construction	$57,100	$1,800	$2,250
Equipment in place, including piping, fittings, electrical work and controls.....	106,850	17,900	20,400
Monitoring equipment in place.....	9,000		
Engineering design and inspection.....	34,590	3,940	4,530
Incidentals, overhead, fees, contingencies...	34,590	3,940	4,530
Land.....	21,000		
TOTAL INVESTMENT COST	$263,130	$27,580	$31,710
B. OPERATION AND MAINTENANCE COST			
Labor and supervision.	$112,000	$14,000	$14,000
Energy.....	2,200	300	300
Chemicals.....	1,500		100
Maintenance.....	24,213	2,758	3,171
Taxes and insurance...	7,893	827	951
Residual waste disposal.....	5,800		
Monitoring, analysis and reporting.....	15,000	7,500	7,500
TOTAL OPERATION AND MAINTENANCE COST	$168,606	$25,385	$26,022
C. AMORTIZATION OF INVESTMENT COST	$39,394	$4,487	$5,159
TOTAL ANNUAL COST	$208,000	$29,872	$31,181

*First level represents the base cost of treatment system.
Other levels represent the incremental cost above base cost.

TABLE 11-33 MODEL PLANT TREATMENT COSTS

Subcategory CHLORINE Diaphragm cell Type of Regulation BAT

Production 95,500 metric tons per year (105,288 tons per year)
272 metric tons per day (300 tons per day)
Waste water flow 340 cubic meters per day.

	LEVEL OF TREATMENT*		
	FIRST	SECOND	THIRD
A. INVESTMENT COST			
Construction	$148,100	$2,900	$3,350
Equipment in place, including piping, fittings, electrical work and controls.....	219,700	27,000	29,500
Monitoring equipment in place.....	9,000		9
Engineering design and inspection.....	75,360	5,980	6,571
Incidentals, overhead, fees, contingencies...	75,360	5,980	6,571
Land.....	63,000		
TOTAL INVESTMENT COST	$590,520	$41,860	$46,002
B. OPERATION AND MAINTENANCE COST			
Labor and supervision.	$112,000	$14,000	$14,000
Energy.....	4,900	600	600
Chemicals.....	7,500		500
Maintenance.....	52,752	4,186	4,600
Taxes and insurance...	17,715	1,255	1,380
Residual waste disposal.....	29,000		
Monitoring, analysis and reporting.....	15,000	7,500	7,500
TOTAL OPERATION AND MAINTENANCE COST	$238,867	$27,541	$28,580
C. AMORTIZATION OF INVESTMENT COST	$85,827	$6,810	$7,484
TOTAL ANNUAL COST	$324,694	$34,351	$36,064

*First level represents the base cost of treatment system.
Other levels represent the incremental cost above base cost.

TABLE 11-34 MODEL PLANT TREATMENT COSTS

Subcategory CHLORINE Diaphragm cell — Type of Regulation BAT

Production 191,000 metric tons per year (210,577 tons per year)
545 metric tons per day (601 tons per day)

Waste water flow 680 cubic meters per day.

	LEVEL OF TREATMENT*		
	FIRST	SECOND	THIRD
A. INVESTMENT COST			
Construction	$271,900	$4,800	$5,250
Equipment in place, including piping, fittings, electrical work and controls.....	295,500	43,500	46,000
Monitoring equipment in place.....	9,000		
Engineering design and inspection.....	115,280	9,660	10,250
Incidentals, overhead, fees, contingencies...	115,280	9,660	10,250
Land.....	123,000		
TOTAL INVESTMENT COST	$929,960	$67,620	$71,750
B. OPERATION AND MAINTENANCE COST			
Labor and supervision.	$112,000	$14,000	$14,000
Energy.....	8,000	600	600
Chemicals.....	15,000		1,000
Maintenance.....	80,696	6,762	7,175
Taxes and insurance...	27,898	2,028	2,152
Residual waste disposal.....	58,000		
Monitoring, analysis and reporting.....	15,000	7,500	7,500
TOTAL OPERATION AND MAINTENANCE COST	$316,594	$30,890	$32,427
C. AMORTIZATION OF INVESTMENT COST	$131,292	$11,001	$11,673
TOTAL ANNUAL COST	$447,886	$41,891	$44,100

*First level represents the base cost of treatment system.
Other levels represent the incremental cost above base cost.

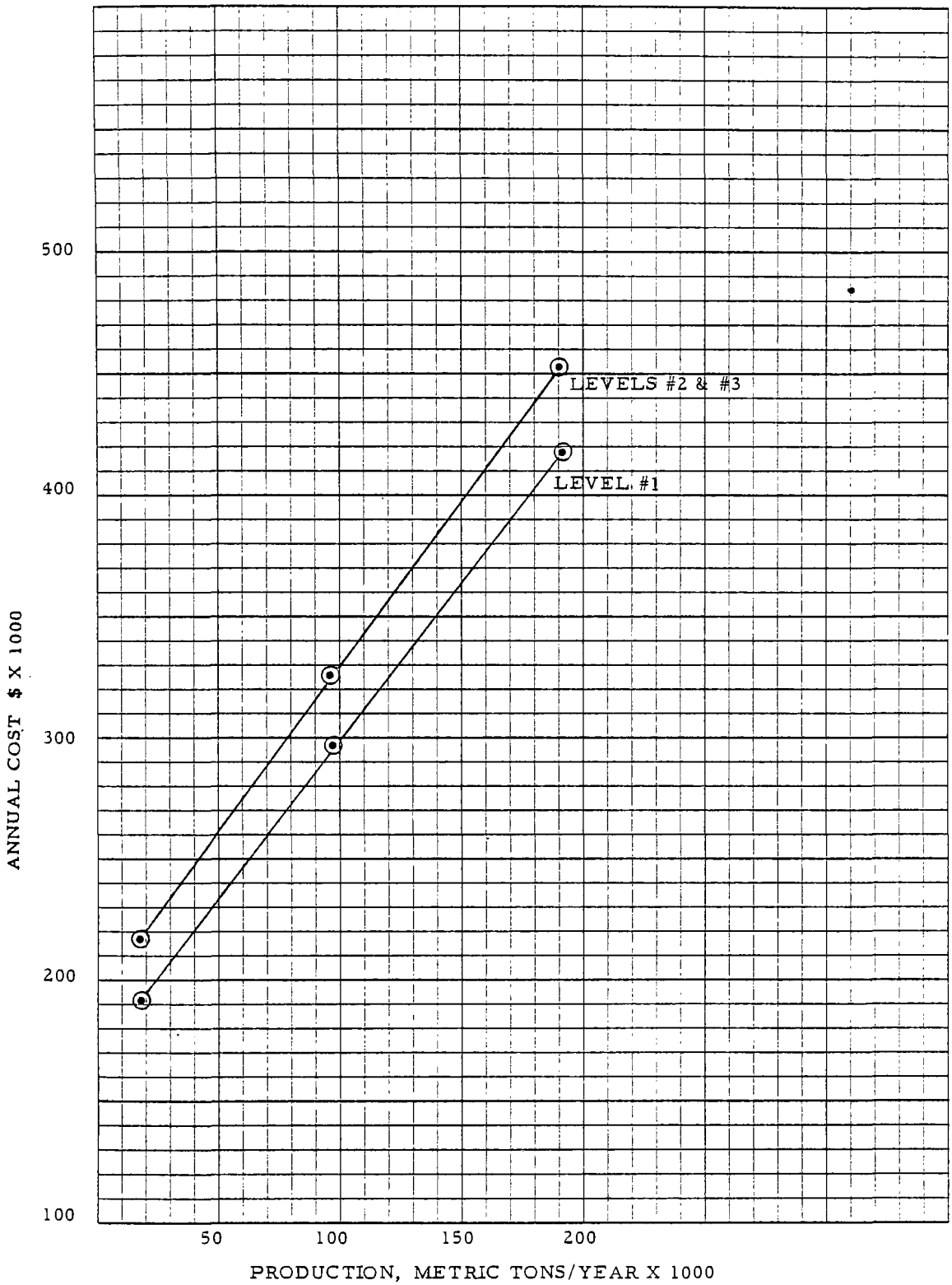

Figure 11-20. Annual treatment cost vs. production for the Chlorine Subcategory (Diaphragm Cell Process)

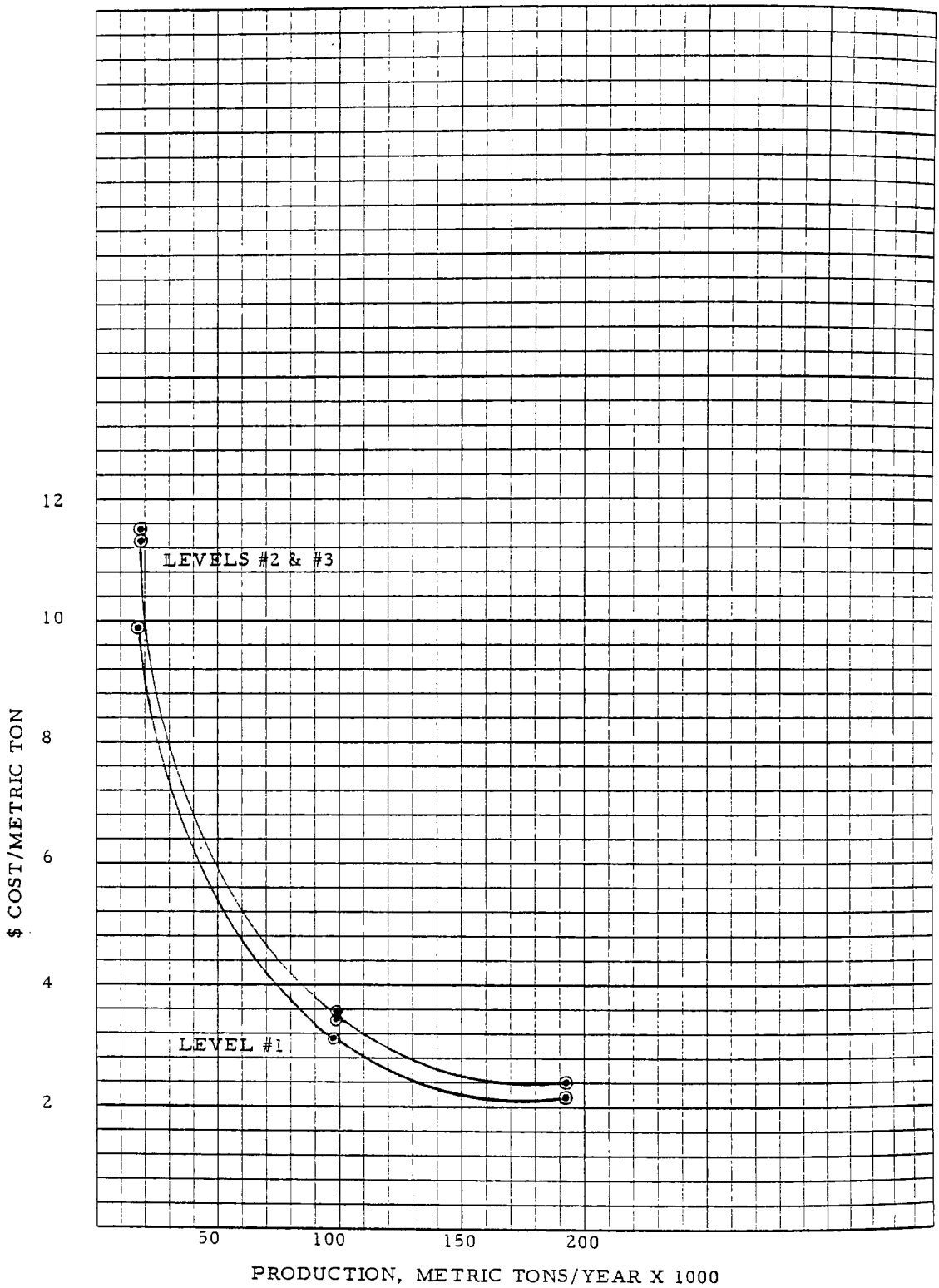

Figure 11-21. Annual unit treatment cost vs. production for the Chlorine Subcategory (Diaphragm Cell Process)

TABLE 11-35 MODEL PLANT TREATMENT COSTS

Subcategory CHLORINE Diaphragm cell Type of Regulation BAT

	PRODUCTION (kkg/yr)	FLOW (m3/day)	Annual Treatment Costs ($/kkg) LEVEL OF TREATMENT FIRST $	SECOND $	THIRD $	FOURTH $
Annual Operation and Maintenance	19,100	68	8.83	1.33	1.36	Not Applicable
	95,500	340	2.50	0.29	0.30	
	191,000	680	1.66	0.16	0.17	
Annual Amortization	19,100	68	2.06	0.23	0.27	
	95,500	340	0.90	0.07	0.08	
	191,000	680	0.69	0.06	0.06	
Total Cost	19,100	68	10.89	1.56	1.63	
	95,500	340	3.40	0.36	0.38	
	191,000	680	2.34	0.22	0.23	

Summary

Although chlorine manufacture usually produces three waste streams, only the brine mud and metal or asbestos contaminated wastes are considered as contributing to waste flows and treatment costs. Tail gas scrubber wastes, typically high in sodium hypochlorite, are usually sold or returned to process, and are therefore excluded from waste flows and waste treatment costs for the model plants. However, for the range of annual production in metric tons from 31,850 to 190,750, the annual cost of decomposition of sodium hypochlorite varies from $1.26 to $4.30 per metric ton of product (3).

The chlorine subcategory is a multi-product industry, since caustic soda is a by-product of chlorine manufacture by either process. In this report investment costs and annual costs are expressed in terms of treatment cost per metric ton of chlorine production, without considering the production or value of the by-product caustic soda.

In this report brine mud is presumed to be left on-site in accordance with current practice at many chlorine plants. For neutralization, it is assumed that waste sulfuric acid is available at the plant at no cost.

Diaphragm cell base level BPT costs - Waste treatment cost summary sheets for three chlorine production rates by the diaphragm cell process are included as Tables 11-32, 11-33 and 11-34 respectively. Base level costs are shown as the First Level of treatment. The unit costs of BPT treatment per metric ton of chlorine production in Figure 11-21 are shown as the upper curve, varying from $2.19 to $9.97 per metric ton.

Diaphragm cell advanced level costs - Waste treatment cost summary Tables 11-32, 11-33, 11-34 show incremental advanced level costs in the column marked "second" and "third". The unit costs per metric ton of chlorine production, at first, second, and third level costs, are shown by the curve (Level 1, 2, and 3 Diaphragm Cell on Figure 11-21).

At the second level, the incremental cost varies from $2.37 to $11.36. There is insignificant difference in cost between second and third levels. Hence, these two levels are represented by the same curve on Figure 11-21.

SECTION 12

HYDROFLUORIC ACID INDUSTRY

12.1 ASSESSMENT OF THE WATER POLLUTION POTENTIAL

12.1.1 Industry Profile and Analytical Results

Hydrofluoric acid (Hydrogen fluoride-HF) is produced both as anhydrous and aqueous products. It is used in the manufacture of fluorocarbons which are used as refrigerating fluids, and plastics, for pressurized packing and as dispersants in aerosol sprays. It is used in the production of aluminum, in the refining and enriching of uranium fuel, pickling of stainless steel, in petroleum alkylation, and for the manufacture of fluoride salts.

The industry data profile is given in Table 12-1, while the existing regulations are given in Table 12-2.

The priority pollutants found at significant concentrations in the raw waste during sampling at hydrofluoric acid Plant #705 were later verified at three other plants. The results were:

Pollutant	Maximum Concentration Observed ug/l Screening	Verification (3 Plants)
Copper	770	595
Lead	5190	199
Selenium	25	234
Zinc	8120	11313
Antimony	70	2805
Arsenic	10	158
Cadmium	2	20
Chromium	73	1180
Mercury	2	43
Nickel	150	2005
Thallium	5.5	63

TABLE 12-1 - SUBCATEGORY PROFILE DATA SUMMARY

SUBCATEGORY	HYDROFLUORIC ACID
Total subcategory capacity rate	363,000 kkg/year
Total subcategory production rate	261,800 kkg/year
Number of plants in this subcategory	14
308 Data on file for	8
With total capacity of	
With total production of	177,000 kkg/year
Representing capacity	
Representing production	68 percent
Plant production range:	
Minimum	7,300 kkg/year
Maximum	62,000 kkg/year
Average production	22,100 kkg/year
Median production	15,800 kkg/year
Average capacity utilization	83 percent
Plant age range:	
Minimum	7 years
Maximum	58 years
Wastewater flow range:	
Minimum	0 cubic meters/day
Maximum	4,700 cubic meters/day
Volume per unit product:	
Minimum	0 cubic meters/kkg
Maximum	86 cubic meters/kkg

Sources of data are Stanford Research Institute, Directory of Chemical Producers, U.S.A., 1977, U.S. Department of Commerce, Current Industrial Reports, December 1977; Energy and Environmental Analysis, Inc.; Draft Report, "Preliminary Economic Assessment of Effluent Limitations in the Inorganic Chemical Industry."

TABLE 12-2 - EXISTING REGULATIONS - EFFLUENT LIMITATION GUIDELINES

SUBCATEGORY Hydrofluoric Acid

SUBPART H (40 CFR 415.80, 3/12/74)

		STANDARDS					
		BPCTCA*		BATEA*		NSPS*	
Product Process	Parameters	Max.[1] kg/kkg (mg/l)	Avg.[2] k/kkg (mg/l)	Max. k/kkg (mg/l)	Avg. k/kkg (mg/l)	Max. k/kkg (mg/l)	Avg. k/kkg (mg/l)
Hydrofluoric Acid	Fluoride	(30)	(15)	No discharge of pwwp[3]		No discharge of pwwp	
	TSS	(50)	(25)	No discharge of pwwp		No discharge of pwwp	

*Sections 415.82, 415.83, and 415.85 were remanded and are presently reserved (41 FR 51601, November 23, 1976).

[1]Max. = Maximum of any one day.

[2]Avg. = Average of daily values for thirty consecutive days shall not exceed.

[3]pwwp = Process wastewater pollutants.

A summary of daily and unit product raw waste loads for all plants sampled can be found in Table 12-3. Individual plant raw waste loads per unit product found in sampling can be found in Table 12-4.

Based on the total annual production of this subcategory and the average waste load generated per unit product, the estimated total priority pollutant raw waste loads generated each year for this subcategory are as follows:

Pollutant	Waste Load (kg/year)
Copper	7300
Lead	2000
Selenium	260
Zinc	11000
Antimony	7900
Arsenic	1500
Cadmium	71
Chromium	6300
Mercury	170
Nickel	113000
Thallium	550

12.1.2 Process Waste Sources and Waste Water Treatment Data

General Process Description

Raw material and process - Hydrogen fluoride is the most important manufactured compound of the fluorine family in volume of production. Fluorspar (mainly CaF_2) and sulfuric acid are the raw materials used for its manufacture. The reaction is given as:

$$CaF_2 + H_2SO_4 + \text{heat} = CaSO_4 + 2HF \qquad (1)$$

Crude fluorspar, as mined, varies in CaF_2 content from 50 to 90 percent. The ore is upgraded by flotation which results in 98 percent calcium fluoride being available for the production of hydrofluoric acid.

The reaction kinetics and the yield of product depends on the purity and fineness of the fluorspar. The concentration of sulfuric acid, the temperature of the reaction, and the ratio of sulfuric acid to fluorspar, are among the important variables. The analysis of the fluorspar (average) is given as:

TABLE 12-3. SUMMARY OF RAW WASTE LOADINGS FOUND IN SCREENING AND VERIFICATION SAMPLING

SUBCATEGORY HYDROFLUORIC ACID

Pollutant	Loadings						
	kg/day			kg/kkg			No. of Plants Averaged
	Minimum	Average	Maximum	Minimum	Average	Maximum	
Priority							
Antimony, Sb	0.015	1.63	6.44	0.0003	0.03	0.12	4
Arsenic, As	0.012	0.46	1.12	0.0003	0.0056	0.012	3
Cadmium, Cd	0.0036	0.011	0.017	0.0001	0.00027	0.00031	3
Chromium, Cr	0.14	1.73	5.49	0.0043	0.024	0.06	4
Copper, Cu	0.60	1.42	2.80	0.015	0.028	0.051	4
Lead, Pb	0.10	1.74	5.62	0.003	0.046	0.165	4
Mercury, Hg	0.0027	0.056	0.20	0.00008	0.00065	0.002	4
Nickel, Ni	0.14	3.90	13.0	0.0004	0.051	0.14	4
Selenium, Se	0.016	0.066	0.12	0.0005	0.001	0.002	3
Thallium, Tl	0.0054	0.084	0.16	0.00016	0.0021	0.003	2
Zinc, Zn	0.49	21.1	72.1	0.014	0.41	1.33	4
Conventional							
TSS	13587	132789	247438	170	2711	5702	
Fluorine, F	497	2971	7891	14.6	45.4	86.9	

TABLE 12-4. PRIORITY POLLUTANT RAW WASTE LOADS (in kg/kkg of Product)

SUBCATEGORY	HYDROFLUORIC ACID			
POLLUTANT	PLANT			
	#705	#705	# 251	# 167
Arsenic, As	0.003		0.012	0.0045
Copper, Cu	0.027	0.018	0.015	0.051
Lead, Pb	0.003	0.0075	0.0098	
Nickel, Ni	0.004	0.032	0.143	0.025
Selenium, Se	0.0005		0.0013	0.0012
Zinc, Zn	0.269	0.014	0.031	1.33
Cadmium, Cd	0.0001	0.0004		0.00031
Chromium, Cr	0.0043	0.018	0.06	0.012
Mercury, Hg	0.00008	0.0004	0.002	0.00011
Antimony, Sb	0.0016	0.0004	0.0003	0.118
Thallium, Tl				0.003

CaF_2	Minimum	97.5-98%
SiO_2	Maximum	1.0%
S	"	0.05%
H_2O	"	0.1%
$CaCO_3$	Principal remainder	

Sulfuric acid with a concentration as low as 93 percent or as high as 99 percent is generally used. Dilute sulfuric acid enhances better mixing and liberation of fluoride but has two disadvantages. The first disadvantage is that the dilute acid is very corrosive and the second disadvantage is that the water present in the acid evaporates and distills off with the hydrogen fluoride gas, thus reducing product concentration. Concentrated sulfuric acid (greater than 98 percent) offsets these disadvantages but creates new problems. The vapor pressure of concentrated sulfuric acid is sufficiently high to cause large amounts of sulfuric acid to be carried away by the hydrofluoric acid. Excess sulfuric acid, when used, will leave with the gypsum as part of the residue.

The reaction between fluorspar and sulfuric acid is endothermic. The reaction time varies and is usually between 20-60 minutes with the temperature of the reaction around 200-250 degrees C.

Hydrogen fluoride generators are, in the majority of cases, externally fired rotary kilns with acid and fluorspar fed continuously (through a screw conveyor) at the forward end and calcium sulfate (gypsum) removed from the other end through an air lock. The product also leaves this end, at the top, as a gas. The theoretical amount of calcium sulfate produced is 3.4 kg/kg of HF produced, but because of the impurities in the fluorspar the actual amount produced is higher and varies from 3.6 to 4.0 kg of crude calcium sulfate per kg of HF produced.

Silica is a highly objectionable contaminant, since each pound consumes 2.0 pounds of fluorspar and 3.3 pounds of sulfuric acid by the following reaction:

$$SiO_2 + 2CaF_2 + 2H_2SO_4 = SiF_4 + 2CaSO_4 + 2H_2O \qquad (2)$$

One manufacturer uses a patented process to supply internal heat to the reactor. The heat is supplied by introducing sulfur trioxide (SO_3) and water (as steam). The exothermic heat liberated by the reaction of SO_3 and water is used for the heat required for HF generation. Thus a part of the sulfuric acid is supplied as SO_3.

The hydrogen fluoride gas leaving the reactor is cooled in a precooler to condense high boiling compounds. The condensables are known as drip acid and largely consist of fluorosulfonic acid (HSO3F) and unreacted sulfuric acid. Nine plants out of a total of eleven return the drip acid to the reactor, while the other two send the drip acid to the waste treatment plant. The HF gas from the precooler is further cooled and condensed in a cooler/refrigeration unit. The uncondensed gas containing the HF is scrubbed with sulfuric acid and refrigerated to recover the product. The scrubbed acid liquor is returned to the kiln, and residual vent gases are further scrubbed with water to remove HF and other fluoride compounds before they are vented to the atmosphere. The scrubber water is sent to the waste water treatment plant. Figure 12-1 is a block flow diagram of the manufacturing process.

The crude hydrofluoric acid is then distilled to remove the residual impurities, and the condensate, which is anhydrous hydrofluoric, is stored in tanks. If aqueous hydrofluoric is desired, this is then diluted with water to form a 70 percent HF solution as the final product.

Water Use and Waste Source Inventory

Water Use - Water is used in hydrofluoric acid production in noncontact cooling, air pollution control, product dilution, seals on pumps and kilns, and for equipment and area washdown. Although noncontact cooling constitutes the major use of water, water is also used, in a majority of cases, in the transport of gypsum as a slurry to the waste water treatment facility. The water for gypsum transport is provided by either recycling the water from the treatment facility or by using once-through cooling water. Table 12-5 summarizes the water usage found in this study.

Waste Sources

A. Gypsum solids: Gypsum solids are generated as a by-product. The amount produced is in the range of 3.6 - 4.0 kg/kg of HF produced. The gypsum also contains small amounts of sulfuric acid, hydrofluoric acid and calcium fluoride. Minor amounts of other impurities present in fluorspar are also removed with the gypsum. In seven out of eleven plants producing hydrofluoric acid, the gypsum is slurried with water and sent to the waste water treatment facility. Three plants transport the gypsum as a dry solid and dispose of it as a solid waste after mixing with lime for neutralization. The disposal method of one plant is not known.

B. Drip acid: This is formed in the first stage of the cooling (i.e., in the precooler) of the gases emitted from the

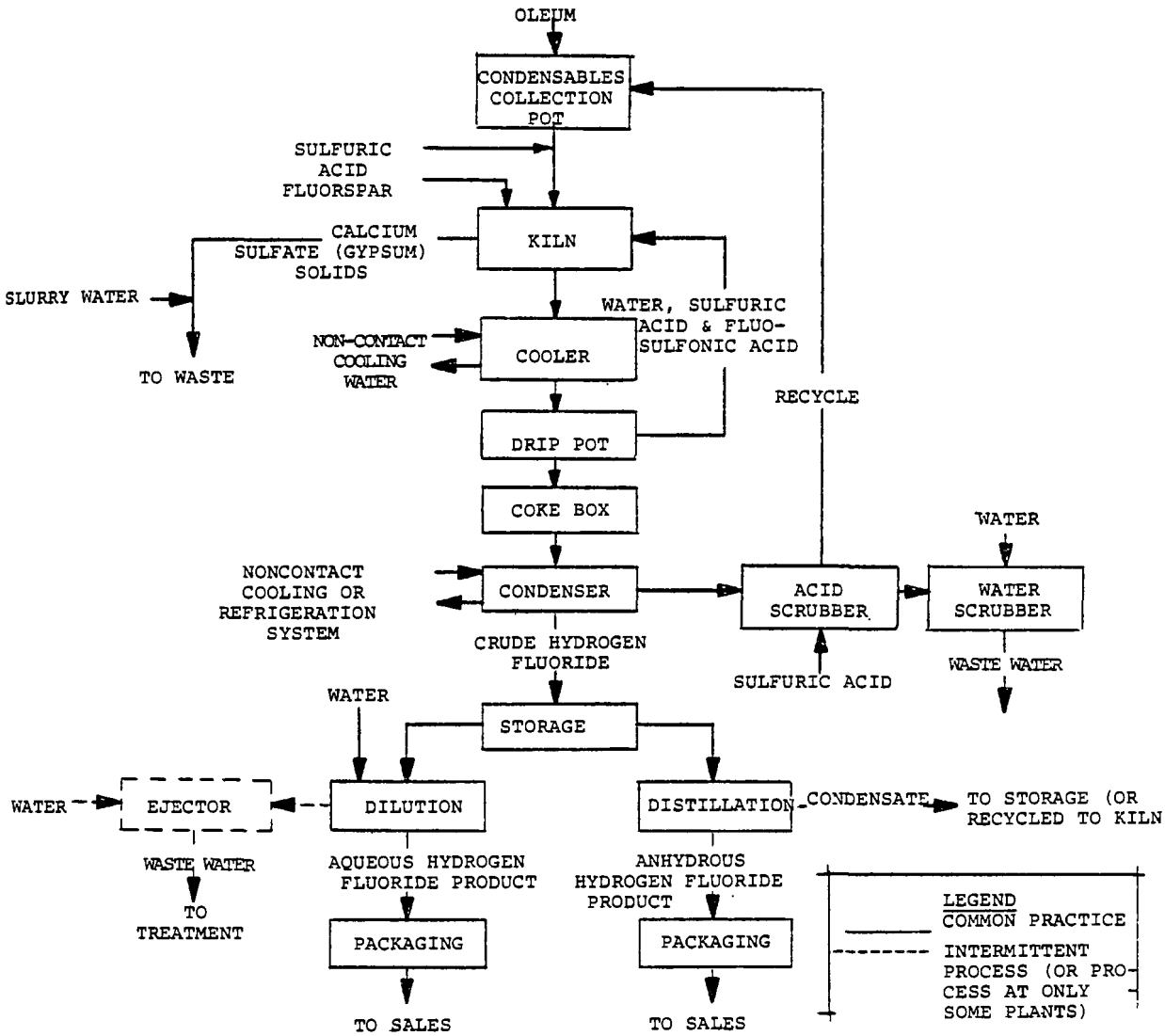

Figure 12-1. General process flow diagram for production of hydrofluoric acid.

TABLE 12-5. WATER USAGE IN THE HYDROFLUORIC ACID SUBCATEGORY

Source	Water Usage at Plant (m^3/kkg of HF)							
	#987	#251	#753	#426	#120	#722	#167	#705
Non-contact Cooling	NA	154	63.5	110	NA	13.6	116.5	30
Gypsum Slurry Transport	64	-	NA	-	NA	22.5	41.6	30
Maintenance, Equipment and Area Washdown	2.4	NA	2.11	NA	0.1	12.2	5.0	16.9
Air Pollution Control	14.4	7.9	4.23	-	0.586	14.45	19.31	11.25

NA = Not Available.

kiln. Drip acid mostly contains high boiling compounds consisting of complex fluorides, especially fluorosulfonic acid, and small amounts of hydrofluoric acid, sulfuric acid, and water. Fluorosulfonic acid is formed by reaction between hydrofluoric acid and strong sulfuric acid. The quantity of drip acid produced is relatively small. Nine out of eleven plants producing HF recycle the drip acid back to the reactor. In most cases, it is mixed with the sulfuric acid feed stream before it enters the kiln where it is hydrolyzed to form sulfuric acid and hydrofluoric acid. The critical factors for hydrolysis are temperature and retention time and enough water is normally present in the kiln for the reaction.

C. Noncontact cooling water: Noncontact cooling water is used for precooling the product gases emitted from the kiln. The possibility of product or other process compounds leaking into it is very small, and this stream is relatively unpolluted. In some plants the cooling water is used to transport the waste gypsum.

D. Scrubber waste water: Scrubber water is another waste water source, and in plants which practice dry disposal of gypsum, scrubber water constitutes the predominant and major source of waste water. It contains fluoride, sulfate, and acidity. The fluoride is present as hydrogen fluoride, silicon tetrafluoride (SiF_4), and hexafluosilicic acid (H_2SiF_6). Silica present in the ore as an impurity reacts with HF forming silicon tetrafluoride as shown in Equation 3.

$$SiO_2 + 4HF = SiF_4 + 2H_2O \quad (3)$$

In the scrubber, a part of the tetrafluoride is converted to hexafluosilicic acid according to Equation 4.

$$SiF_4 + 2HF(aq) = H_2SiF_6\ (aq) \quad (4)$$

The scrubber water consequently needs treatment for fluoride before discharge.

E. Distillation wastes: The distillation waste generally contains HF and water. In some cases the vent gases from the distillation column are scrubbed before they are emitted to the atmosphere, and the resulting scrubber water requires treatment.

The range of waste water quality of the different streams generated from the production of HF is summarized in Table 12-6. The data are taken from the prior development documents, 308 Questionnaire responses, and industry visits.

TABLE 12-6. WASTE FLOW FROM HYDROFLUORIC ACID MANUFACTURING PLANTS, m^3/kkg OF HYDROFLUORIC ACID

Source of Waste water	Plants								
	#251	#987	#753	#426	#120	#722	#167	#705	#837
Gypsum Slurry	64.0	Dry disposal	NA	Dry disposal	Dry disposal	(Total Recycle)	41.6	(Total Recycle)	6.5
Drip Acid	0.049	-	-	-	-	-	-	0.018	-
Scrubber Waste water	14.4	8.3	2.3	-	0.624	(Total Recycle)	40	11.25	1.12
Other	0.53	0.53	8.4	NA	5.55	NA	5.2	22.52	NA

NA = Not Available

Control and Treatment Practices

Plant #705 combines the hydrofluoric acid wastes, including the gypsum slurry, with aluminum fluoride waste. The combined waste water, after neutralization, is sent to settling lagoons before discharge. This plant was visited in both the screening and verification phases of the project and a fuller description of waste treatment practice is given below.

Plant #837 combines the gypsum slurry and plant area hosedown waste water with the equipment washings, leaks, and spills etc. from the aluminum fluoride plant and neutralizes them with lime. The solids are removed in settling ponds before discharge. The waste water from scrubbers of both hydrofluoric acid and aluminum fluoride plants is sent to an adjoining facility for use.

Plant #251 also combines the hydrofluoric acid and aluminum fluoride waste water. The suspended solids in the combined waste water are removed in the gypsum ponds. The overflow from the gypsum ponds is neutralized and the pH adjusted with the waste water from other products which are manufactured on the site. The plant is in the process of installing a new proprietary treatment process to further reduce the fluoride in its waste waters.

Two plants, #120 and #987, dispose of the kiln residue as a solid waste after lime addition. The waste water in both cases is treated with lime and the solids are separated; in one case in a clarifier followed by a filtration, and in the other by lagooning.

At Plant #167, the combined waste water (including the gypsum) is neutralized with lime and then settled in lagoons before discharge.

Plant #722 practices complete recycle. The gypsum slurry, scrubber water, and other waste waters are combined and treated with caustic soda for neutralization. The neutralized solution is settled in lagoons and the overflow is treated with muriatic acid before being recycled to the scrubbers and to the kiln to slurry the gypsum.

Plant #426 disposes of the gypsum solids from the kiln as a solid waste after lime addition. The scrubber water is used to make another product. The noncontact cooling water is neutralized when required with caustic soda and settled before discharge.

Description of Plants Visited and Sampled

Screening - Plant #705 was visited and process waste water samples were collected and analyzed for classical and priority pollutants. The process used at this site is similar to the conventional HF manufacturing process described earlier. The drip acid is sent to the waste water treatment facility and the gypsum produced from the reactor is slurried with water and also sent to the treatment facility. The waste waters from the HF production facility are combined with the aluminum fluoride plant waste waters. The combined raw waste water is treated with lime and sent to settling ponds before discharge. Figure 12-2 shows the general process and the locations of the sampling points. Table 12-7 gives the flow data and the total suspended solids (TSS) and fluoride emissions.

Verification - Plant #705 was repeat sampled in the verification phase and the same streams sampled. The variation in the flow of the streams in the two sampling phases was negligible. Table 12-8 gives the TSS and fluoride load summary of the sampled streams.

One more HF plant (Plant #251) was sampled in the verification phase. The drip acid at this facility is also sent to the waste treatment plant and the hydrofluoric acid waste waters are combined with aluminum fluoride plant waste for treatment. In addition to drip acid, the plant waste water consists of scrubber water, gypsum slurry, and plant area hose down. The treatment consists of gypsum ponds where the suspended solids are removed. The overflow from the last gypsum pond is neutralized and the pH adjusted with wastes from other product lines. Figure 12-3 is a block diagram of the process showing the sampling locations. Table 12-8 gives the summary of the waste flow data and the concentration and loads of the important classical pollutants.

Evaluation of Production and Waste Flow Data

When gypsum solids from the kiln are slurried with water for treatment, the resulting stream constitutes the major source of waste water. When kiln residue is disposed of as a solid waste, scrubber waste water is the major source of waste. Table 12-9 gives the data for the direct and indirect process contact waste water going to treatment facilities. Noncontact cooling water has not been included in the figures given in Table 12-9. Figure 12-4 is a graphical representation of production versus waste water flow going to treatment facility for plants whose waste water includes the gypsum slurry and for those practicing disposal of kiln residue as a solid waste.

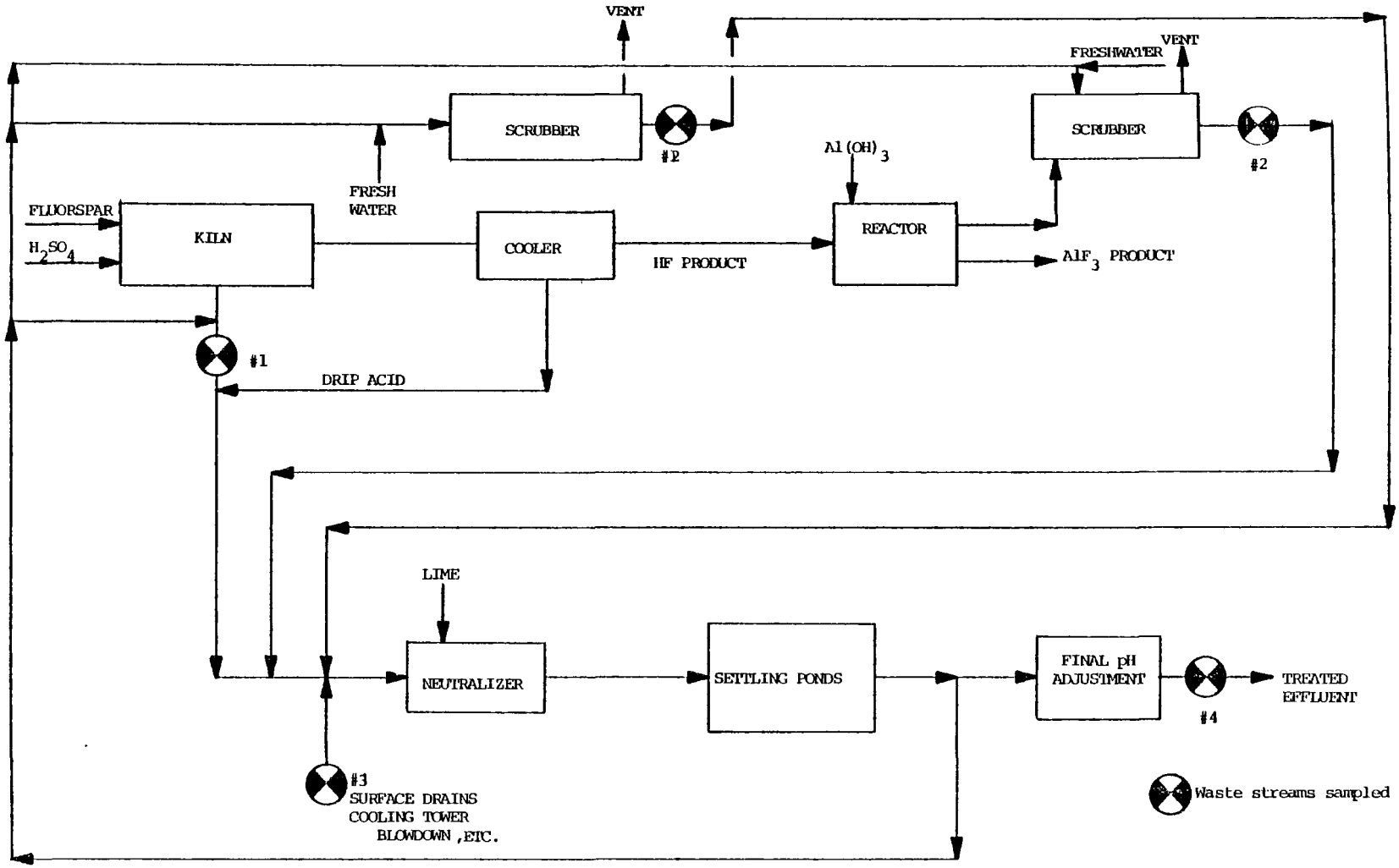

Figure 12-2. General process flow diagram at Plant #705 showing the sampling points.
Hydrofluoric Acid Manufacture

TABLE 12-7 FLOW AND POLLUTANT CONCENTRATION DATA OF THE SAMPLED WASTE STREAMS OF PLANT #705 PRODUCING HYDROFLUORIC ACID

Stream No.	Sampled Stream Description	Unit Flow m^3/kkg of HF	Unit Fluoride kg/kkg of HF	Unit SS kg/kkg of HF
1	Kiln Slurry	26.6	14.63	1360
2	Scrubber Waste Water	10	9.6	0.07
3	Surface Drains Cooling Tower Blowdown	20	6.9	3.92
4	Treated Effluent	23.3	1.58	1.91

TABLE 12-8. FLOW AND POLLUTANT CONCENTRATION DATA OF THE SAMPLED WASTE STREAMS FOR PLANTS #705 AND #251 PRODUCING HYDROFLUORIC ACID

Plant	Stream No.	Sampled Stream Description	Unit Flow m^3/kkg of HF	Unit Fluoride kg/kkg of HF	Unit SS kg/kkg of HF
#705	1	Kiln Slurry	26.6	3.8	4731
	2	Scrubber Waste Water	10	1.52	0.023
	4	Surface Drains Cooling Tower Blowdown	20	3.38	4.02
	5	Treated Effluent	23.3	0.54	0.04
#251	5	AHF Plant Hosedown	1.2	1.9	0.26
	6	SO_2 Scrubber Waste	14.37	0.31	0.1
	2	Gypsum Pond Inlet	82.3	54	1533
	3	Gypsum Pond Outlet	82.3	26.5	0.8

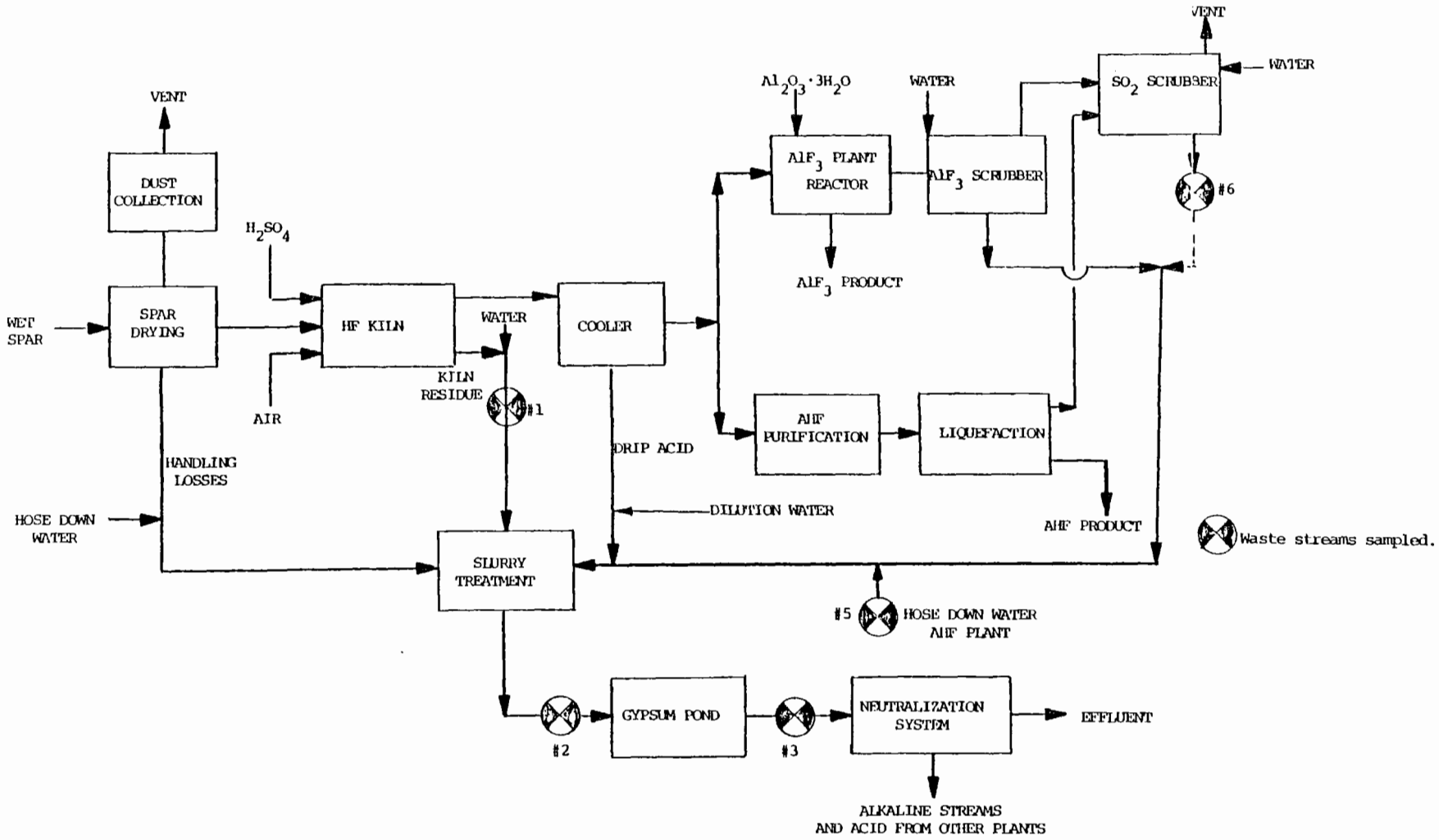

Figure 12-3. General process flow diagram at Plant #251 showing the sampling points.
Hydrofluoric Acid Manufacture

TABLE 12-9. WASTE WATER INFLUENT DATA TO TREATMENT FACILITY IN THE HYDROFLUORIC ACID SUBCATEGORY

Plant	Kiln Residue	Unit Waste Water Influent to Treatment Facility m^3/kkg of HF
#837	A	120.6
#705	A	58.2
#167	A	166.4
#722	A	49.4
#120	D	9.08
#426	D	0
#753	NA	11.1
#987	D	13.61
#251	A	82.4

A = Slurried with water.

D = Dry disposal.

NA = Not Available.

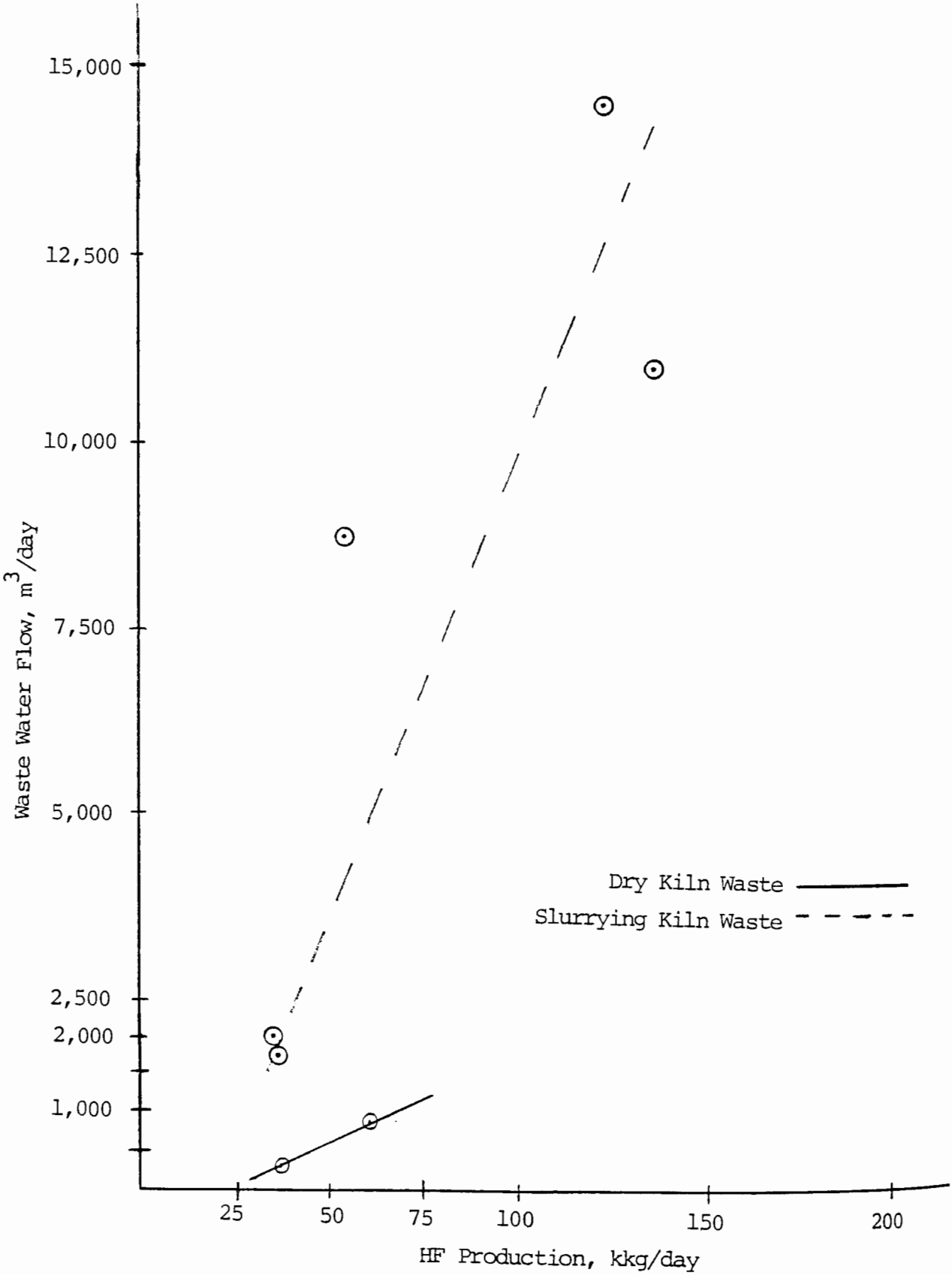

Figure 12-4. Production versus waste flow data for HF plants.

Solid Waste Generation

The total solids generated from the process and the treatment system consist of gypsum ($CaSO_4$) and the fluoride precipitated as calcium fluoride. Table 12-10 gives the amount of suspended solids going to the treatment facility (generated from the process) and the quantity of total suspended solids generated at the waste water treatment plant for the HF plants visited in screening and verification. It can be seen from the data that the gypsum waste is the major source of solids produced and constitutes more than 95 percent of the total solids produced. Table 12-11 gives the amount of gypsum solids produced at different HF manufacturing facilities. It can be seen from the table that the gypsum solids vary from 3.6 to 4.1 kg solids per kg of product.

Process Modifications and Technology Transfer Options

1. Gypsum produced in the kiln can be disposed of as a solid waste instead of being slurried with water and sent to the waste water treatment facility. The solids in this case are stored in piles on the land surface until alternative disposal methods are found or the site abandoned. Although the dry disposal method is labor intensive (involving transporation and landfill operating cost), it has been found to be less expensive due to the reduced initial capital requirement and operating costs relative to the wet slurry method which requires a more extensive system of pipes, pumps and on-site impoundments.

2. The use of soda ash in place of lime for neutralization has some advantages. It eliminates or reduces the problem of scale formation in the pipelines and scrubbers when the treated waste water is recycled. It offers a faster reaction time and better control of pH than lime. Even though the cost of soda ash is higher than lime, soda ash has found to be a less expensive alternative at some plants overall. After the use of soda ash, the treated effluent water can be totally recycled, either to the scrubber or to the kiln for transportation water for the gypsum. Soda ash when added to raw waste water, increases the pH of the stream. As the pH approaches 6, sodium replaces calcium present in the gypsum waste. This frees enough calcium ion to precipitate fluoride as calcium fluoride. Where the scrubber water is the predominant source of waste water, the water has to be first treated with enough lime to precipitate fluoride as calcium fluoride. Soda ash can then be added to the supernatant to precipitate calcium followed by neutralization with HCl to reduce scaling problems.

3. Two out of a total of 11 plants manufacturing hydrofluoric acid send the drip acid to the waste water treatment facility. The rest of the plants recycle it to the reactor.

TABLE 12-10. SUMMARY OF SOLID WASTE GENERATED FROM THE HF MANUFACTURING PROCESSES AND TREATMENT FACILITIES AT PLANTS #705 AND #251

Plant	Gypsum Solids Going To Treatment Facility kg/kkg of HF	Total Solids Produced kg/kkg of HF
#705	3300	3377
#251	1533	1647

TABLE 12-11. GYPSUM SOLIDS PRODUCTION IN THE HYDROFLUORIC ACID SUBCATEGORY

Plant	Unit Kiln Residue Produced kg/kkg of HF	Kiln Residue Disposal/Treatment Method
#837	3.86	A
#705	NA	A
#167	3.93	A
#722	NA	A
#120	NA	D
#426	4	D
#987	4.13	D
#251	4.0	A

A = Slurried with water and sent to wastewater treatment facility.

D = Dry disposal.

NA = Not Available.

When discharged to the waste treatment system, the fluorosulfonic acid does not hydrolyze and leaves with the treated effluent as a complex fluoride in soluble form. The total fluoride concentration of the effluent will be higher for the plants discharging drip acid compared to those which do not, after the same neutralization treatment. The two plants discharging drip acid to waste, looked into the feasibility of returning it to the kiln, but because of the unique design of the kilns, they found it to be economically unattractive. Bench scale studies have shown that the drip acid can be hydrolyzed to free the HF.

$$HSO_3F + H_2O + \text{heat} = H_2SO_4 + HF \qquad (5)$$

The two plants not returning the drip acid to the kiln should be able to hydrolyze the material in a separate unit before commingling it with other wastes, thus avoiding the treatability problem associated with complex fluorides.

Best Management Practices

1. Provision can be made to collect runoff from raw material and product storage, process, and impoundment areas. It should be treated with other process waste at the waste water treatment facility. Leachate and permeate control needs to be practiced on the solid waste stored in many plant premises as gypsum piles. There is a risk that uncontrolled stockpiling may contaminate the local ground water.

2. Ponds designed for solids removal must be deep enough to have a minimum of disturbance from wind and rain. Baffles can be used to reduce the frequency of wind-induced mixing, and episodes of solids being resuspended and passing into the effluent be reduced.

3. Performance evaluation and review of discharge quality has been complicated by problems associated with chemical analysis. Prior to July 1976, the method generally used for the analysis of fluoride in industry was the specific ion electrode or colorimetry. This method did not detect the soluble complex fluoride species present in the waste water. The best method of total fluoride detection (free as well as complex) is distillation followed by analysis using the specific ion electrode. Using the distillation method, the complex fluorides are hydrolyzed and the resulting HF is carried over with the distillate along with any free HF in the sample. Thus, the method of total fluoride analysis used for effluent monitoring is capable of measuring free fluoride and the fluoride present in the form of complex ions which are not removed by lime treatment. Monitoring data on effluent fluoride levels using the revised

method are likely to be higher than the levels previously reported under the same treatment conditions.

Model Plant and BPT Level Treatment System Specifications Process

The proposed BPT model treatment consists of:

A. Slurry transportation of kiln solids to an equalization basin.
B. Application of lime to precipitate CaF_2, followed by lagoon settling.
C. PH adjustment before final discharge.
D. Scrubber, cooling and distillation wastes enter the equalization basin.

It is assumed that drip acid is recycled to the process reactor and does not appear directly in the waste stream.

For new or remodeled production facilities, the NSPS model treatment system is based on hauling dry kiln residue directly to a landfill. Miscellaneous liquid wastes in the NSPS model are subjected to two stage lime-soda ash neutralization/precipitation, followed by filtration and partial recycling of effluent for use in scrubbers.

Waste water flow - The data in Table 12-9 for plants sending the gypsum solids to the treatment facility indicate that the unit flow varies from 49.3 m3/kkg of HF to 166.4 m3/kkg of HF. For the model plants, a constant unit flow of 43 m3/kkg of HF was assumed.

HF production - In the HF subcategory, production ranges from a minimum of 7,300 kkg/year to a maximum of 62,000 kkg/year with a mean of 22,100 kkg/year and a median of 15,800 kkg/year. For waste water treatment cost estimates, three production levels were selected as model plants. These are 19,000 kkg/year, 41,000 kkg/year, and 57,000 kkg/year.

Waste water pollutant load - The amount of kiln residue varies from 3.6 to 4.1 kg/kg of HF produced. The waste water going to treatment model plants is assumed to contain 3.8 kg of solid kiln residue per kg of HF. Fluoride levels in waste water have shown to vary as indicated below:

12.2 TECHNOLOGY BASED POLLUTION ABATEMENT

12.2.1 Advanced Level Treatment Applications

Priority Pollutants to be Controlled

Priority pollutants in raw waste waters and slurries typical of the HF industry include the heavy metals often found as impurities in fluorspar. These metals are zinc, lead, nickel, mercury, chromium, arsenic, copper, and selenium. Raw waste waters from plants practicing dry disposal of kiln wastes may include some of the same heavy metals in scrubber and area washdown wastes, but in considerably smaller amounts, since the spent ore is hauled as a solid waste and bypasses the waste water treatment facilities. Although the fluoro-sulfonate complex is found in HF wastes containing drip acid, organic compounds are not anticipated in waste waters from this industry.

Removal Technologies Available

Although alkaline precipitation, sulfide precipitation, the xanthate process, and ion exchange might be applied to clarified solutions for control of metal ions, only alkaline precipitation can be readily used for slurried kiln wastes from HF production. Sulfide precipitation from cleared solutions will control zinc, lead, nickel, and copper and to a lesser extent, antimony.

Selection of Appropriate Technology

BPT (Level 1) - Neutralization with lime, used widely in the HF industry, is shown as the BPT treatment, principally to control pH and the nonconventional pollutant - fluoride - which is precipitated as calcium fluoride. Sufficient settled effluent is recycled to transport kiln waste to the treatment facility as a slurry, and the remainder is adjusted to a pH between 6 and 9 before discharge.

Level 2 - Treatment is alkaline precipitation, using additional lime and close control of pH in second-stage neutralization, followed by lagoon settling. Sufficient lagoon effluent is recycled to transport kiln waste to the treatment facility as a slurry and the remainder is filtered to remove finely divided metal hydroxides.

Level 3 - It is assumed that 65 percent of the Level 2 effluent is recycled for transporting spent kiln waste to the treatment facility. For the remaining 35 percent, pH adjustment and sulfide precipitation are used ahead of the Level 2 dual

media filter, to react with residual lead, copper, nickel, zinc, and antimony which may not have reached their optimum pH levels for alkaline precipitation.

Level 4 - An alternative for Level 2, Level 4 employs soda ash instead of lime for neutralization, depending on the spent ore to contain enough calcium to precipitate calcium fluoride. Use of soda ash permits increased effluent recycling without scaling problems associated with calcium sulfate. To control salinity and sodium alkalinity a final effluent blowdown of at least 10 percent of the influent rate is maintained. The common heavy metals will be precipitated as carbonates and hydroxides with varying degrees of effectiveness at pH levels attainable with soda ash. The effluent is filtered and adjusted to a pH between 6 and 9 before discharge or process recycling.

New sources - The chosen NSPS treatment is dry handling and off-site chemical landfill for the kiln waste and two-stage alkaline precipitation with clarification and filtration for the liquid process wastes. Heavy metal precipitation with soda ash permits partial recycling for uses other than slurry transport.

Flow Diagrams

Flow sheets for the various levels of treatment are:

Level 1 (BPT)	Figure 12-5
Level 2 (BAT)	Figure 12-6
Level 3 (BAT)	Figure 12-7
Level 4 (BAT)	Figure 12-8
NSPS	Figure 12-9

Equipment functions - Level 1, typical of existing treatment facilities, utilizes very little equipment, but depends on lime neutralization in settling lagoons, with final pH adjustment.

In Level 2, conventional dual media filtration is added to the Level 1 system. In Level 3, standard reagent mixing and solution feeding units are added to the Level 2 system. In Level 4, which is an alternate for Level 2, the same type of chemical feed equipment is used for soda ash as was used for lime in Level 2. Conventional lagoons and dual media filters are used in Level

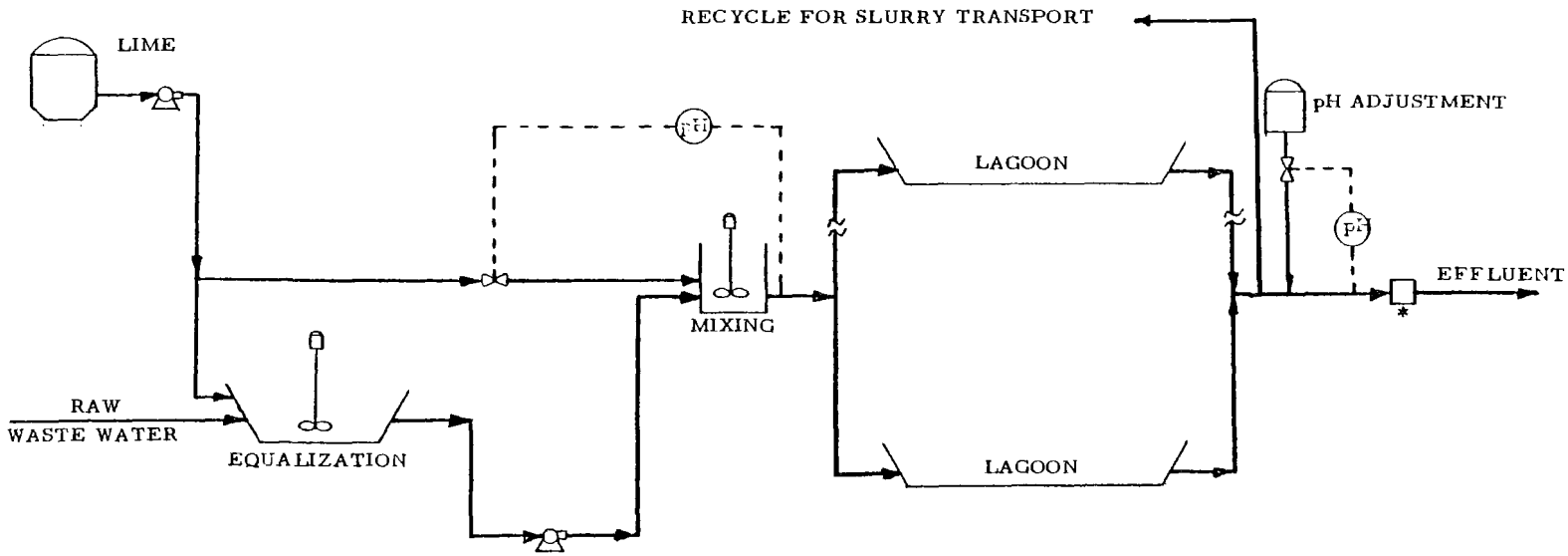

*Includes flow monitoring, pH monitoring and sampler

Figure 12-5. Waste water treatment Level 1 for hydrofluoric acid subcategory.

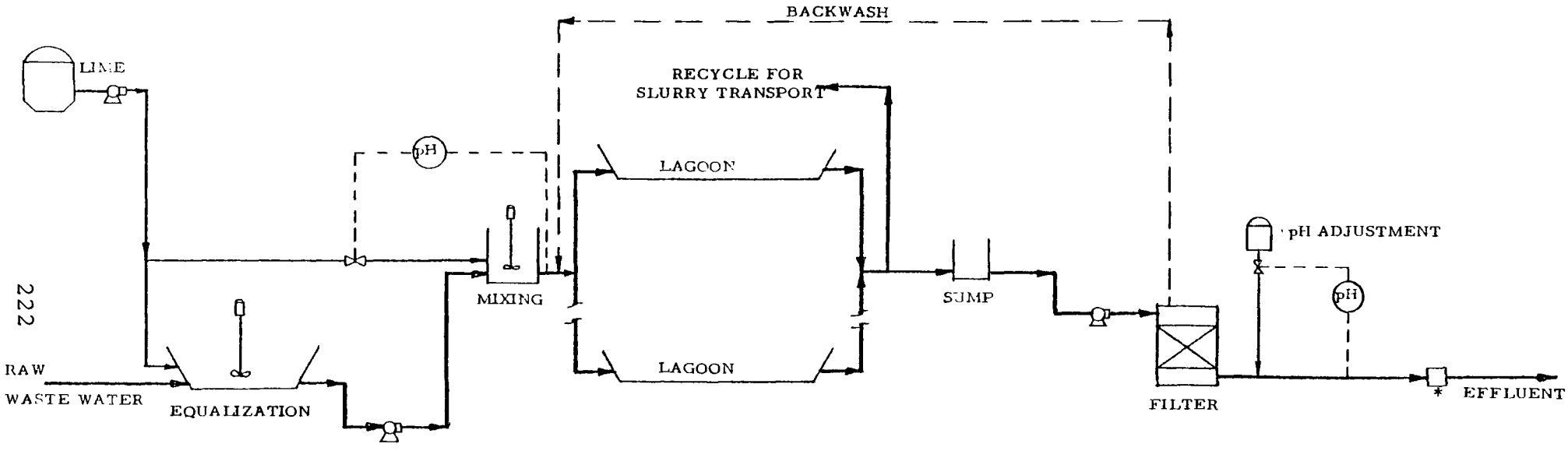

*Includes flow monitoring, pH monitoring and sampler

Figure 12-6. Waste water treatment Level 2 for hydrofluoric acid subcategory.

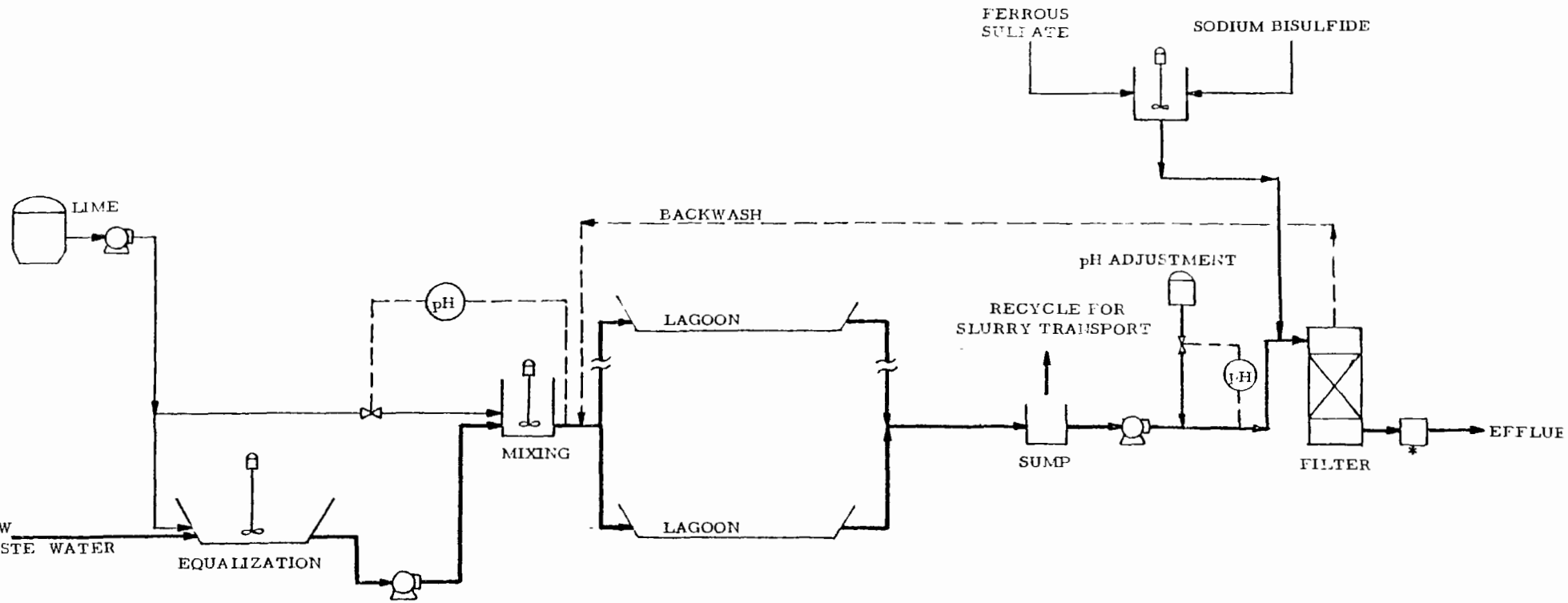

*Includes flow monitoring, pH monitoring and sampler

Figure 12-7. Waste water treatment Level 3 for hydrofluoric acid subcategory.

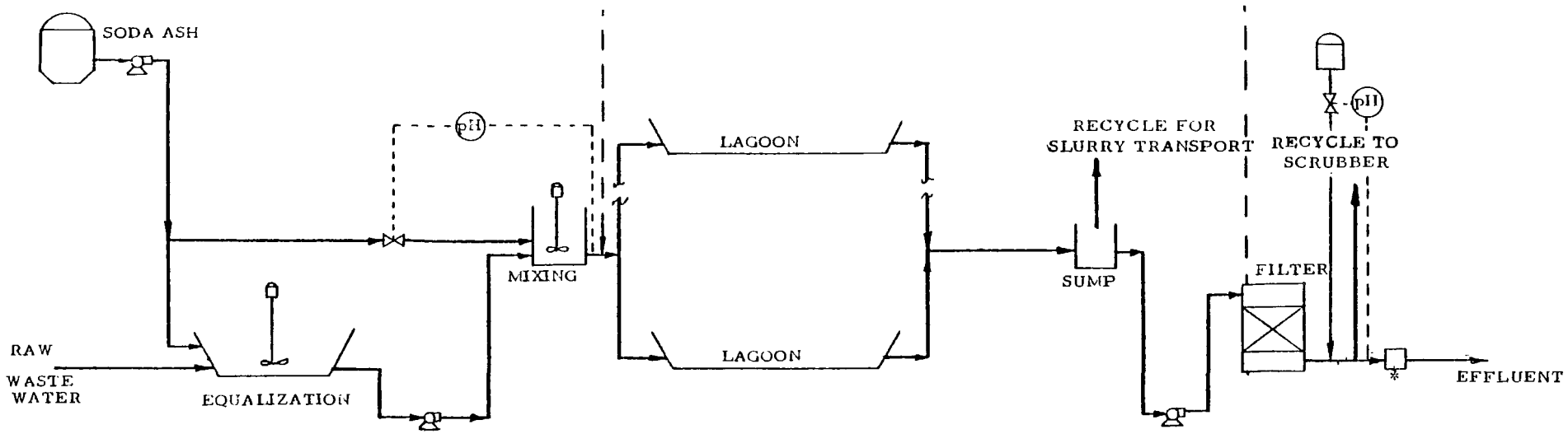

*Includes flow monitoring, pH monitoring and sampler

Figure 12-8. Waste water treatment Level 4 for hydrofluoric acid subcategory.

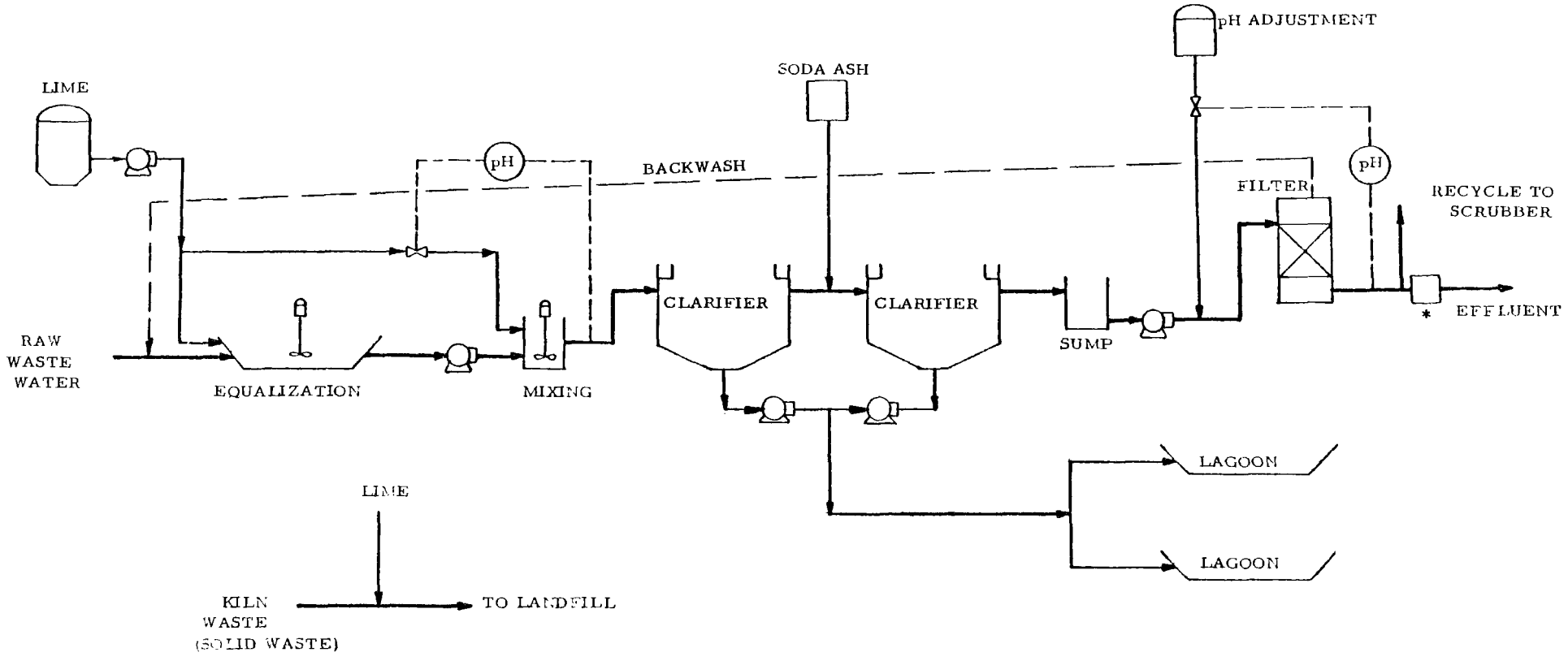

*Includes flow monitoring, pH monitoring and sampler.

Figure 12-9. Waste water treatment new source performance standard for hydrofluoric acid subcategory.

4, but special attention to selection of materials is required because of the high salinity of recycled effluent. In the NSPS model, dry kiln waste disposal is recommended with conventional dry solids handling equipment. Lagoons, clarifiers, and filters are used for scrubber, noncontact cooling, and other miscellaneous liquid wastes. In this case, equipment for storing and handling the dry kiln waste is not considered to be waste water treatment, and the cost is not included in the cost estimates.

Chemical handling - Lime (as CaO) is the major chemical used in Levels 1 and 2, along with minor amounts of hydrochloric acid for final pH adjustment. With normal precautions, these chemicals pose no special hazards. In Level 3, ferrous sulfide is prepared on-site by mixing sodium bisulfide and ferrous sulfate. Although sodium bisulfide can release toxic H_2S at pH levels below 7, the hazard can be mitigated by avoiding acid conditions and by providing adequate ventilation. After mixing its components, the ferrous sulfide solution is stable at the pH levels employed in the process. In Level 4, only the common chemicals sodium carbonate and hydrochloric acid are used, without unusual safety hazards or special handling problems. In the NSPS system only the common chemicals lime, soda ash and hydrochloric acid are used, introducing no special problems of safety or handling.

Separation and removal of solids - Solids are accumulated in unlined settling lagoons. In Level 4, calcium fluoride will still precipitate in the lagoons but the total sludge quantities will be less than in Levels 1, 2, and 3 where lime is used. Solids from Level 4 treatment will be alkaline, very saline, and difficult to consolidate. Dry solids from the NSPS model are not subjected to treatment, except for nominal application of lime before hauling in dry form to an approved chemical landfill.

Monitoring requirements - All levels of treatment except Level 4 require monitoring of the effluent for TSS, pH, and fluoride. Levels 2 and 3 should be monitored in addition for the toxic heavy metals, zinc, lead, copper, chromium, and antimony. At the metal concentrations being considered, these tests will not be field tests made on routine operational samples. To achieve desired accuracy, the sampling should be done by "new condition equipment" and delivered promptly to a qualified laboratory for anaysis by atomic absorption methods.

12.2.2 Estimated Performance of BPT Systems

Control and treatment practices for eleven plants producing hydrofluoric acid are presented in Table 12-12. Also indicated are other product-related waste water sources and pollutant loads discharged.

TABLE 12-12. SUMMARY OF WASTE WATER CONTROL AND TREATMENT TECHNOLOGY EMPLOYED AT HYDROFLUORIC ACID PLANTS *

Plant	Product-Related Waste Water Sources	Control and Treatment Technology Employed	Amount of Treated Waste Water Recycled	Cooler Bottoms (Condensables) Recycled?	Effluent Volume in m^3/metric ton (gal/short ton) of Actual Production	Average Pollutant Wasteload Discharged (kg/metric ton) (lb/1000 lb) Fluoride	TSS
#426	Hydrofluoric acid fluosilicic acids production	Dry residue hauling and dumping; neutralization with caustic of noncontact cooling water and floor drainage	0	Yes	465 (111,397) includes noncontact cooling water	1.2	ND
# 664	Hydrofluoric acid production	Residue slurry, neutralization with sodium carbonate, settling, recycle	94%	Yes	5.78 (1,360)	0.10	0.27
# 167	Hydrofluoric acid, fluorocarbon, Chlorine/sodium hydroxide, and hydrochloric acid production	Residue slurry, lime treatment, settling, recycle	47%	Yes	103 (24,200)	18	0.45
# 120	Hydrofluoric acid production	Planned dry residue handling, lime treatment, clarification	0	Yes	ND	ND	ND
# 967	Hydrofluoric acid, fluorocarbon, and sulfuric acid production	Residue slurry, settling (Recycle and pH polishing facilities under construction.)	Present: 0 Planned: 70% to 75%	Yes	125 (30,000)	Present: 24 Expected with additional facilities 1.8	16 2.1
# 928	Hydrofluoric acid and aluminum fluoride production	Residue slurry, settling, recycle (Flocculation, lime treatment, and clarification facilities under construction.)	83%	Yes	9.44 (2,260)	Present: 1 Expected with additional facilities 0.65	1.7 0.75
# 837	All hydrofluoric acid generated as used captively for aluminum fluoride production	Residue slurry, lime treatment, settling	0	Yes	134 (32,200)	2.3	4.1
# 753	Hydrofluoric acid production	Residue slurry, lime treatment, settling, recycle, pH polishing	65%	Yes	11.0 (2,650)	0.64	0.38
# 251	HF, AlF_3, chlorine/sodium hydroxide, aluminum oxide, and fluorocarbon production	Residue slurry, settling, neutralization	0	1 Kiln: Yes 3 Kilns: No	22.2×10^3 (553×10^4)	46	530
# 705	Hydrofluoric acid and aluminum fluoride production	Residue slurry, lime treatment, settling, recycle, pH polishing	30% to 35%	No	25.9 (6,204)	3.2	0.64
# 722	Hydrofluoric and, in recent past, fluoboric, acid production	Residue slurry, lime treatment, settling, recycle, pH polishing	92% to 100%	Yes	0-10.3 (0-2,460)	0-0.81	0 to 0.54

* See Reference 3

It is clear from the table that a wide variation in effluent quality exists within this subcategory. The factors believed to cause these variations are the following:

Dry Residue Handling

The disposal of kiln waste by dry handling rather than slurrying is practiced currently at two plants. This process eliminates the major source of waste water generated at most plants, greatly reducing the raw waste loads to be treated. The only sources of waste water remaining are from air pollution control and washdown.

Effluent Recycle

Recycle of treated waste water for slurry transport of kiln wastes is commonly practiced to varying degrees and clearly has a major effect on pollutant loads discharged. Although four plants do not practice recycle, it has been demonstrated sufficiently that this practice is both technologically and economically feasible.

Recycle of Condensables

Recycling of drip acid or condensable cooler bottoms reduces the loading of fluoride in the treated effluent since the fluoride species (fluorosulfonic acid) in this material is not removed by conventional lime treatment. Only two plants do not recycle drip acid.

Other Related Products

Most hydrofluoric acid plants also discharge wastes from related products such as aluminum fluoride, fluorocarbons, hexafluorosilicic and tetrafluoroboric acids to treatment. These other product wastes can account for higher raw waste loadings and increase the potential for complex fluorides formation and can also impact treatment efficiency by diluting the raw waste. In addition, commingling of other product wastes will limit the percentage of recycle of the total plant treated effluent.

In addition to the above factors, the design and operation of the treatment facilities affect effluent quality. Solids removal depends on retention time and surge capacity. Precipitation of fluoride requires careful pH control and in areas of heavy rainfall or winds, adequate freeboard or multiple ponds are necessary to limit the discharge of high pollutant loads due to unfavorable climatic conditions.

On the basis of the preceeding discussion, BPT technology for the Hydrofluoric Acid Subcategory is:

1. In-process recycle of condensables (drip acid).

2. Chemical treatment (with lime or soda ash) of the waste waters for precipitation of fluoride.

3. Settling and retention of solids.

4. Recycle of at least 65 percent of treated waste water for kiln waste slurry and transport.

5. pH adjustment of final effluent.

Data from four plants practicing effective effluent control are summarized in Table 12-13.

An alternative to the above is dry handling of kiln residues and lime treatment of scrubber and washdown wastes for precipitation of fluorides.

Base Level Performance Characteristics for BPT Pollutant Removal

Table 12-14 presents effluent quality achievable through the implementation of BPT or Level 1 treatment technology for hydrofluoric acid plants.

Base Level (BPT) Performance Characteristics for Priority Pollutant Removal

Raw waste loadings of priority pollutants observed in significant concentrations at hydrofluoric acid plants were presented.

Two of the plants visited and sampled are practicing BPT technology. Plant #705 was sampled for both screening and verification and Plant #167 was sampled during verification. Although Plant #705 does not recycle drip acid, the performance for priority pollutant removal can be considered BPT.

Table 12-15 indicates the performance characteristics for priority pollutant removal at Plants #705 and #167. It is clear that the effluent concentration in the discharge at Plant #705 is well below the significant level and in many cases are below the predicted treatability concentration with lime treatment. This high performance is likely the result of the fact that many of the metals found in the kiln slurry raw waste were in the ore residue as solids and were simply settled out during treatment.

Table 12-14 also presents the achievable effluent quality for priority pollutants using BPT technology.

TABLE 12-13. SUMMARY OF EFFLUENT QUALITY ATTAINED AND VARIABILITY OBSERVED AT FOUR REPRESENTATIVE HYDROFLUORIC ACID PLANTS

	Treated Waste Load (kg/metric ton) (lb/1000 lb)					
	Daily			Monthly		
Parameter	Average	Standard Deviation	Maximum	Average	Standard Deviation	Maximum
			Plant #664**			
pH*	6.8	1.1	2.9 to 7.7	6.8	0.7	5.0 to 7.5
Fluoride	0.10	0.09	0.34	0.10	0.04	0.16
TSS	0.29	0.16	1.1	0.27	0.18	0.63
Flow in m^3/kkg (gal/short ton)	5.6 (1,340)	3.8 (920)	16 (3,760)	5.6 (1,340)	2.1 (500)	10.5 (2,500)
			Plant #753**			
pH*	ND	ND	ND	ND	ND	ND
Fluoride	0.72	0.27	2.0	0.64	0.15	0.76
TSS	0.38	-	-	ND	ND	ND
Flow in m^3/kkg (gal/short ton)	ND	ND	ND	11 (2,650)	ND	ND
			Plant #722**			
pH*	9.0	2.8	2.8 to 12.2	ND	ND	ND
Fluoride	0.81	0.52	2.6	ND	ND	ND
TSS	0.54	0.37	1.2	ND	ND	ND
Flow in m^3/kkg (gal/short ton)	10.2 (2,450)	5.5 (1,316)	24 (5,760)	ND	ND	ND
			Plant #705**			
Fluoride	ND	ND	ND	0.49	0.22	0.8
TSS	ND	ND	ND	0.84	0.37	1.53
Flow in m^3/kkg (gal/short ton)	ND	ND	ND	26.8 (6,433)	--	139 (33,350)

*Value in pH units.
ND = No data available.
** See Reference 3.

TABLE 12-14 CONTROL PARAMETER LIMITATIONS
SUBCATEGORY: Hydrofluoric Acid
Level of Treatment: 1
Waste Water Flow: 14.7 m3/kkg (65% Recycle)

Pollutant	Subcategory Performance (mg/l)	(1) VFR	Quality Limit (mg/l)		Emission Limit (kg/kkg)	
			30 day Aver	24 hr Max	30 day Aver	24 hr Max
BPT Pollutants:						
Total Suspended Solids, TSS	21	2.0	37.5	75	0.55	1.1
Fluoride, F	35	3.0	37.5	112	0.55	1.6
Proposed Priority Pollutants						
Arsenic, As	0.06	2.0	0.5	1.0	0.0074	0.015
Chromium, Cr	0.05	2.0	0.1	0.2	0.0015	0.003
Copper, Cu	0.06 (2)	2.0	0.5	1.0	0.0074	0.015
Lead, Pb	0.3	2.0	0.5	1.0	0.0074	0.015
Mercury, Hg	0.01 (2)	2.0	0.1	0.2	0.0015	0.003
Nickel, Ni	0.09 (2)	2.0	0.5	1.0	0.0074	0.015
Selenium, Se	0.01 (2)	2.0	0.2	0.4	0.0029	0.0058
Zinc, Zn	0.3	2.0	0.5	1.0	0.0074	0.015

(1) - VFR: ratio of the 24 hour variability factor to the 30 day variability factor.

(2) - Verification Sampling

TABLE 12-15. PRIORITY POLLUTANT REMOVAL AT HYDROFLUORIC ACID PLANTS kg/kkg [1]

	Plant			
	#705		#167	
Pollutant	Influent	Effluent	Influent	Effluent
Antimony, Sb	0.00065	0.00012	0.0058	<0.026*
Arsenic, As	0.0025	< 0.0006	0.019	< 0.003
Cadmium, Cd	0.0006	0.0001	-	< 0.0003
Chromium, Cr	0.024	0.0029	0.060	0.032
Copper, Cu	0.018	0.0012	0 .015	0.010
Lead, Pb	0.0031	0.0014	0 .011	0.0047
Mercury, Hg	0.00036	0.00003	0.0034	< 0.00015
Nickel, Ni	0.035	< 0.0006	0.14	0.077
Selenium, Se	-	0.0003	0.008	0.011*
Thallium, Tl	0.00016	0.00007	-	0.0010
Zinc, Zn	0.015	0.0033	0.031	0.023
Flow (m^3/kkg) [2]	62.1		127	

*Effluent is greater than influent.

[1] Values are for combined wastes from HF and AlF_3

[2] Values are for total raw waste from HF only

Pretreatment Applications

No hydrofluoric acid manufacturing facility presently discnarges to a POTW; consequently, no specific pretreatment technology has been proposed.

Response to Remand Issues

The original BPCTCA limitations for this subcategory required zero pollutant discharge except in the event of excess rainfall. Objections to the zero-discharge limitations concerned the feasibility of using gypsum-saturated water for recycle to air pollution control scrubbers.

The proposed BPT waste water control and treatment technology allows for the discharge of process waste water after appropriate treatment and recycle for kiln waste transport. This technology is widely practiced in the industry and should pose no technical problems. Implementation of BPT at all sites in the industry will achieve the indicated pollutant discharge levels.

12.2.3 Estimated Performance of Advanced Level Systems

Advanced Level Performance Estimates for BPT and Priority Pollutant Removal

Tables 12-16, 12-17 and 12-18 present estimated achievable effluent quality through implementation of advanced technologies.

Pretreatment Applications

No hydrofluoric acid manufacturing facility presently discharges to a POTW.

New Source Performance Application

Examination of raw waste loads indicates that the prime source of pollutants at hydrofluoric acid plants is the kiln waste. Currently, two plants handle their kiln waste as a solid greatly reducing the total raw waste load and subsequent effluent. Based on this and an examination of control and treatment alternatives available to this industry, it has been determined that new hydrofluoric acid facilities should achieve effluent quality at least equivalent to BAT. The recommended treatment technology for new sources as described in Section 8, is dry handling of kiln wastes and chemical treatment, filtration and recycle of other wastes. The use of soda ash for

TABLE 12-16 CONTROL PARAMETER LIMITATIONS
SUBCATEGORY: Hydrofluoric Acid
Level of Treatment: 2
Waste Water Flow: 14.7 m3/kkg (65% Recycle)

Pollutant	Treatability (mg/l)	(1) VFR	Quality Limit (mg/l)		Emission Limit (kg/kkg)	
			30 day Aver	24 hr Max	30 day Aver	24 hr Max
BPT Pollutants:						
Total Suspended Solids, TSS	15	2.0	15	30	0.22	0.44
Fluoride, F	25	3.0	25	75	0.37	1.1
Proposed Priority Pollutants						
Arsenic, As	0.1	2.0	0.1	0.2	0.0015	0.003
Chromium, Cr	0.05	2.0	0.05	0.1	0.0007	0.001
Copper, Cu	0.1	2.0	0.1	0.2	0.0015	0.003
Lead, Pb	0.1	2.0	0.1	0.2	0.0015	0.003
Mercury, Hg	0.05	2.0	0.05	0.1	0.0007	0.0015
Nickel, Ni	0.1	2.0	0.1	0.2	0.0015	0.003
Selenium, Se	0.1	2.0	0.1	0.2	0.0015	0.003
Zinc, Zn	0.4	2.0	0.4	0.8	0.0059	0.012

(1) - VFR: ratio of the 24 hour variability factor to the 30 day variability factor.

TABLE 12-17 CONTROL PARAMETER LIMITATIONS
SUBCATEGORY: Hydrofluoric Acid
Level of Treatment: 3
Waste Water Flow: 14.7 m3/kkg (65% Recycle)

Pollutant	Treatability (mg/l)	VFR (1)	Quality Limit (mg/l)		Emission Limit (kg/kkg)	
			30 day Aver	24 hr Max	30 day Aver	24 hr Max
BPT Pollutants:						
Total Suspended Solids, TSS	15	2.0	15	30	0.22	0.44
Fluoride, F	25	2.0	25	75	0.37	1.1
Proposed Priority Pollutants						
Arsenic, As	0.05	2.0	0.05	0.1	0.0007	0.0015
Chromium, Cr	0.05	2.0	0.05	0.1	0.0007	0.0015
Copper, Cu	0.05	2.0	0.05	0.1	0.0007	0.0015
Lead, Pb	0.1	2.0	0.1	0.2	0.0015	0.003
Mercury, Hg	0.01	2.0	0.01	0.02	0.00015	0.0003
Nickel, Ni	0.1	2.0	0.1	0.2	0.0015	0.003
Selenium, Se	0.1	2.0	0.1	0.2	0.0015	0.003
Zinc, Zn	0.2	2.0	0.2	0.4	0.003	0.006

(1) - VFR: ratio of the 24 hour variability factor to the 30 day variability factor.

TABLE 12-18 CONTROL PARAMETER LIMITATIONS
SUBCATEGORY: Hydrofluoric Acid
Level of Treatment: 4
Waste Water Flow: 4.2 m3/kkg (90% Recycle)

Pollutant	Treatability (mg/l)	VFR (1)	Quality Limit (mg/l)		Emission Limit (kg/kkg)	
			30 day Aver	24 hr Max	30 day Aver	24 hr Max
BPT Pollutants:						
Total Suspended Solids, TSS	15	2.0	15	30	0.063	0.13
Fluoride, F	25	3.0	25	75	0.1	0.32
Proposed Priority Pollutants						
Arsenic, As	0.1	2.0	0.1	0.2	0.0004	0.0008
Chromium, Cr	0.05	2.0	0.05	0.1	0.0002	0.0004
Copper, Cu	0.1	2.0	0.1	0.2	0.0004	0.0008
Lead, Pb	0.1	2.0	0.1	0.2	0.0004	0.0008
Mercury, Hg	0.05	2.0	0.05	0.1	0.0002	0.0004
Nickel, Ni	0.1	2.0	0.1	0.2	0.0004	0.0008
Selenium, Se	0.1	2.0	0.1	0.2	0.0004	0.0008
Zinc, Zn	0.4	2.0	0.4	0.8	0.0017	0.0034

(1) - VFR: ratio of the 24 hour variability factor to the 30 day variability factor.

precipitation of fluorides will allow recycle to air pollution control scrubbers, the second major source of waste water.

Assuming 60 percent recycle, the achievable effluent quality through implementation of this technology is indicated in Table 12-19.

Raw waste priority pollutant metals loadings from sources other than kiln wastes were minimal and only occasionally observed at potentially significant levels. it is assumed that following chemical precipitation for fluoride removal, the effluent loads discharged will be insignificant with regard to these metals.

12.2.4 Cost Estimates

General Discussion

The costs shown at each level of treatment correspond to the model plant BPT system (Level 1) and one or more alternative BAT systems (Level 2, 3, and 4) which may add to or modify the existing BPT system to meet more stringent priority pollutant removal requirements. The BAT system also provides a higher effluent water quality with respect to the conventional and nonconventional parameters.

The estimated costs for three models having different production levels are given in Tables 12-20, 12-21 and 12-22. For these models, both the hydraulic and the pollution loads per unit of production are held constant over the entire range of production. Annual treatment cost as a function of production is shown graphically in Figure 12-10. Similarly, treatment cost per metric ton of product is given in Figure 12-11.

To indicate the effect on costs of an increased pollution load per unit of production for a medium level of production model plant, the pollution load was increased by 100 percent and the hydraulic load was held constant. The cost estimate indicated that the annual unit cost per metric ton of product at first and fourth (incremental) levels of treatment increased approximately 40 percent and 90 percent respectively over the original model unit cost. The increased cost is mostly due to the additional cost of chemicals. Increase of pollutant loading had no effect on the unit cost of treatment at other levels of treatment.

Similarly, for one model plant, the hydraulic load was increased by 100 percent and the pollutant load was held constant. The cost estimate indicated that the annual unit cost per metric ton of product at the second and fourth levels of

TABLE 12-19 CONTROL PARAMETER LIMITATIONS
SUBCATEGORY: Hydrofluoric Acid
Level of Treatment: NSPS
Waste Water Flow: 5.9 m3/kkg

Pollutant	Treatability (mg/l)	VFR (1)	Quality Limit (mg/l)		Emission Limit (kg/kkg)	
			30 day Aver	24 hr Max	30 day Aver	24 hr Max
BPT Pollutants:						
Total Suspended Solids, TSS	15	2.0	15	30	0.088	0.18
Fluoride, F	25	3.0	25	75	0.22	0.66
Proposed Priority Pollutants						
Arsenic, As	0.1	2.0	0.1	0.2	0.0006	0.0012
Chromium, Cr	0.05	2.0	0.05	0.1	0.0003	0.0006
Copper, Cu	0.1	2.0	0.1	0.2	0.0006	0.0012
Lead, Pb	0.1	2.0	0.1	0.2	0.0006	0.0012
Mercury, Hg	0.05	2.0	0.05	0.1	0.0003	0.0006
Nickel, Ni	0.1	2.0	0.1	0.2	0.0006	0.0012
Selenium, Se	0.1	2.0	0.1	0.2	0.0006	0.0012
Zinc, Zn	0.4	2.0	0.4	0.8	0.0024	0.0048

(1) - VFR: ratio of the 24 hour variability factor to the 30 day variability factor.

TABLE 12-20. MODEL PLANT TREATMENT COSTS

Subcategory HYDROFLUORIC ACID — Type of Regulation BAT

Production 19,100 metric tons per year (21,057 tons per year)
54 metric tons per day (60 tons per day)

Waste water flow 5220 cubic meters per day.

	LEVEL OF TREATMENT*			
	FIRST	SECOND	THIRD	FOURTH
A. INVESTMENT COST				
Construction	$877,500	$24,500	$25,000	$24,500
Equipment in place, including piping, fittings, electrical work and controls.....	386,000	89,500	92,000	89,500
Monitoring equipment in place.....	9,000			
Engineering design and inspection.....	254,500	22,800	23,400	22,800
Incidentals, overhead, fees, contingencies...	254,500	22,800	23,400	22,800
Land.....	1,020,000			
TOTAL INVESTMENT COST	$2,801,500	$159,600	$163,800	$159,600
B. OPERATION AND MAINTENANCE COST				
Labor and supervision.	$56,000	$14,000	$14,000	$14,000
Energy.....	15,000	1,500	1,800	1,500
Chemicals.....	534,800		3,400	367,700
Maintenance.....	178,150	15,960	16,380	15,960
Taxes and insurance...	84,045	4,788	4,914	4,788
Residual waste disposal.....	350,000			
Monitoring, analysis and reporting.....	15,000	7,500	7,500	7,500
TOTAL OPERATION AND MAINTENANCE COST	1,232,995	$43,748	$47,994	$411,448
C. AMORTIZATION OF INVESTMENT COST	$289,850	$25,966	$26,650	$25,966
TOTAL ANNUAL COST	$1,522,845	$69,714	$74,644	$437,414

*First level represents the base cost of treatment system.
Other levels represent the incremental cost above base cost.

TABLE 12-21. MODEL PLANT TREATMENT COSTS

Subcategory HYDROFLUORIC ACID — Type of Regulation BAT

Production 38,200 metric tons per year (42,115 tons per year)
109 metric tons per day (120 tons per day)
Waste water flow 10450 cubic meters per day.

	LEVEL OF TREATMENT*			
	FIRST	SECOND	THIRD	FOURTH
A. INVESTMENT COST				
Construction	$1,354,500	$35,000	$35,500	$35,000
Equipment in place, including piping, fittings, electrical work and controls.....	533,500	131,000	137,500	131,000
Monitoring equipment in place.....	9,000			
Engineering design and inspection.....	379,400	33,200	34,600	33,200
Incidentals, overhead, fees, contingencies...	379,400	33,200	34,600	33,200
Land.....	1,944,000			
TOTAL INVESTMENT COST	$4,599,800	$232,400	$242,200	$232,400
B. OPERATION AND MAINTENANCE COST				
Labor and supervision.	$56,000	$14,000	$14,000	$14,000
Energy.....	21,500	3,100	3,400	3,100
Chemicals.....	1,069,600		6,700	735,350
Maintenance.....	265,580	23,240	24,220	23,240
Taxes and insurance...	137,994	6,972	7,266	6,972
Residual waste disposal.....	700,000			
Monitoring, analysis and reporting.....	15,000	7,500	7,500	7,500
TOTAL OPERATION AND MAINTENANCE COST	2,265,674	$54,812	$63,086	$790,162
C. AMORTIZATION OF INVESTMENT COST	$432,098	$37,811	$39,405	$37,811
TOTAL ANNUAL COST	$2,697,772	$92,623	$102,491	$827,973

*First level represents the base cost of treatment system.
Other levels represent the incremental cost above base cost.

TABLE 12-22. MODEL PLANT TREATMENT COSTS

Subcategory HYDROFLUORIC ACID — Type of Regulation BAT

Production 57,300 metric tons per year (63,173 tons per year)
163 metric tons per day (180 tons per day)
Waste water flow 15700 cubic meters per day.

	LEVEL OF TREATMENT*			
	FIRST	SECOND	THIRD	FOURTH
A. INVESTMENT COST				
Construction	$1,755,500	$49,000	$50,000	$49,000
Equipment in place, including piping, fittings, electrical work and controls.....	898,000	203,500	215,500	203,500
Monitoring equipment in place.....	9,000			
Engineering design and inspection.....	532,500	50,500	53,100	50,500
Incidentals, overhead, fees, contingencies...	532,500	50,500	53,100	50,500
Land.....	2,880,000			
TOTAL INVESTMENT COST	$6,607,500	$353,500	$371,700	$353,500
B. OPERATION AND MAINTENANCE COST				
Labor and supervision.	$56,000	$14,000	$14,000	$14,000
Energy.....	30,600	4,600	4,900	4,600
Chemicals.....	1,604,400		10,070	1,103,025
Maintenance.....	372,750	35,350	37,170	35,350
Taxes and insurance...	198,225	10,605	11,151	10,605
Residual waste disposal.....	1,050,000			
Monitoring, analysis and reporting.....	15,000	7,500	7,500	7,500
TOTAL OPERATION AND MAINTENANCE COST	3,326,975	$72,055	$84,791	$1,175,080
C. AMORTIZATION OF INVESTMENT COST	$606,464	$57,514	$60,475	$57,514
TOTAL ANNUAL COST	$3,933,439	$129,569	$145,266	$1,232,594

*First level represents the base cost of treatment system.
Other levels represent the incremental cost above base cost.

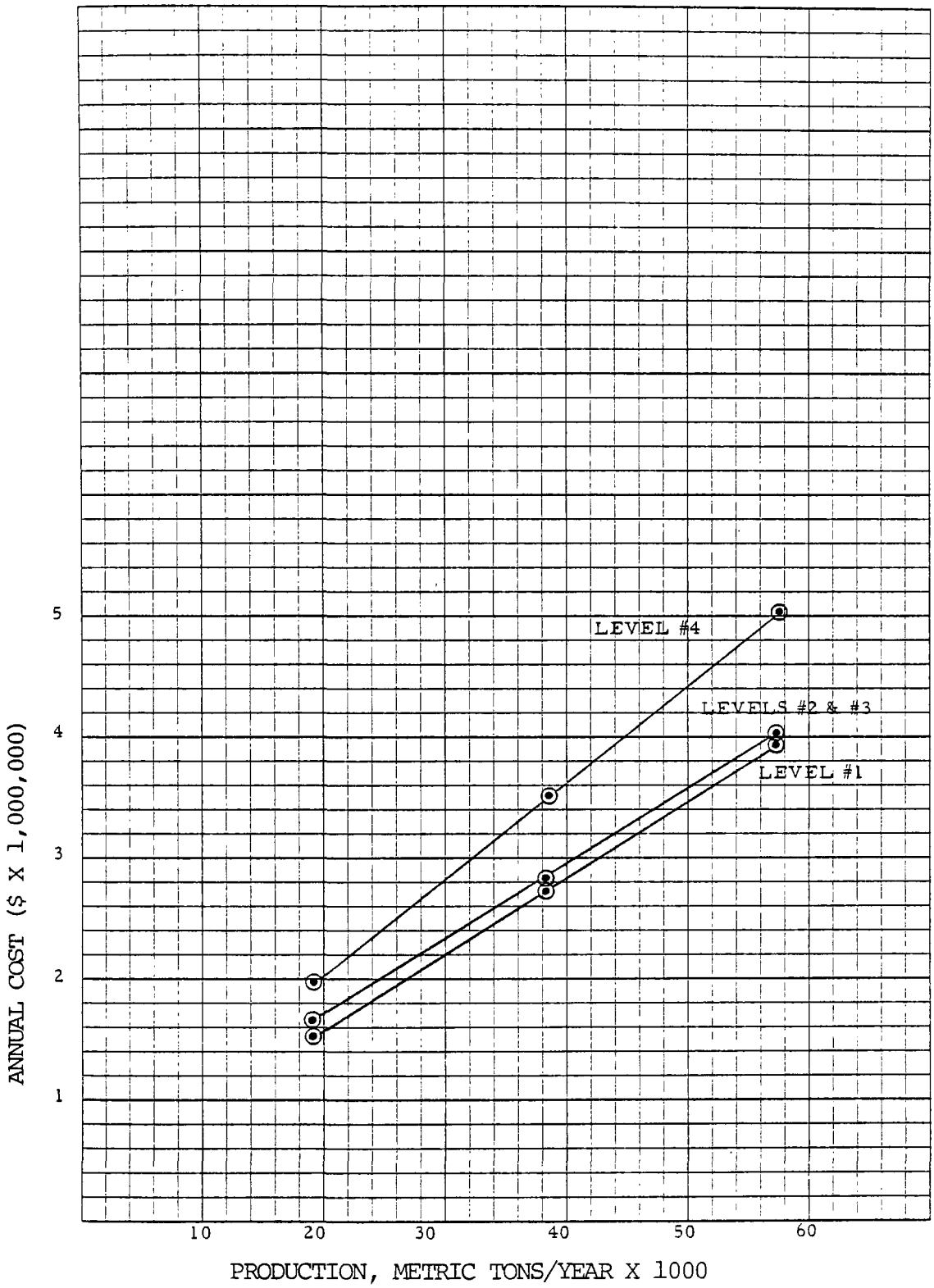

Figure 12-10. Annual treatment cost vs. production for the Hydrofluoric Acid Subcategory

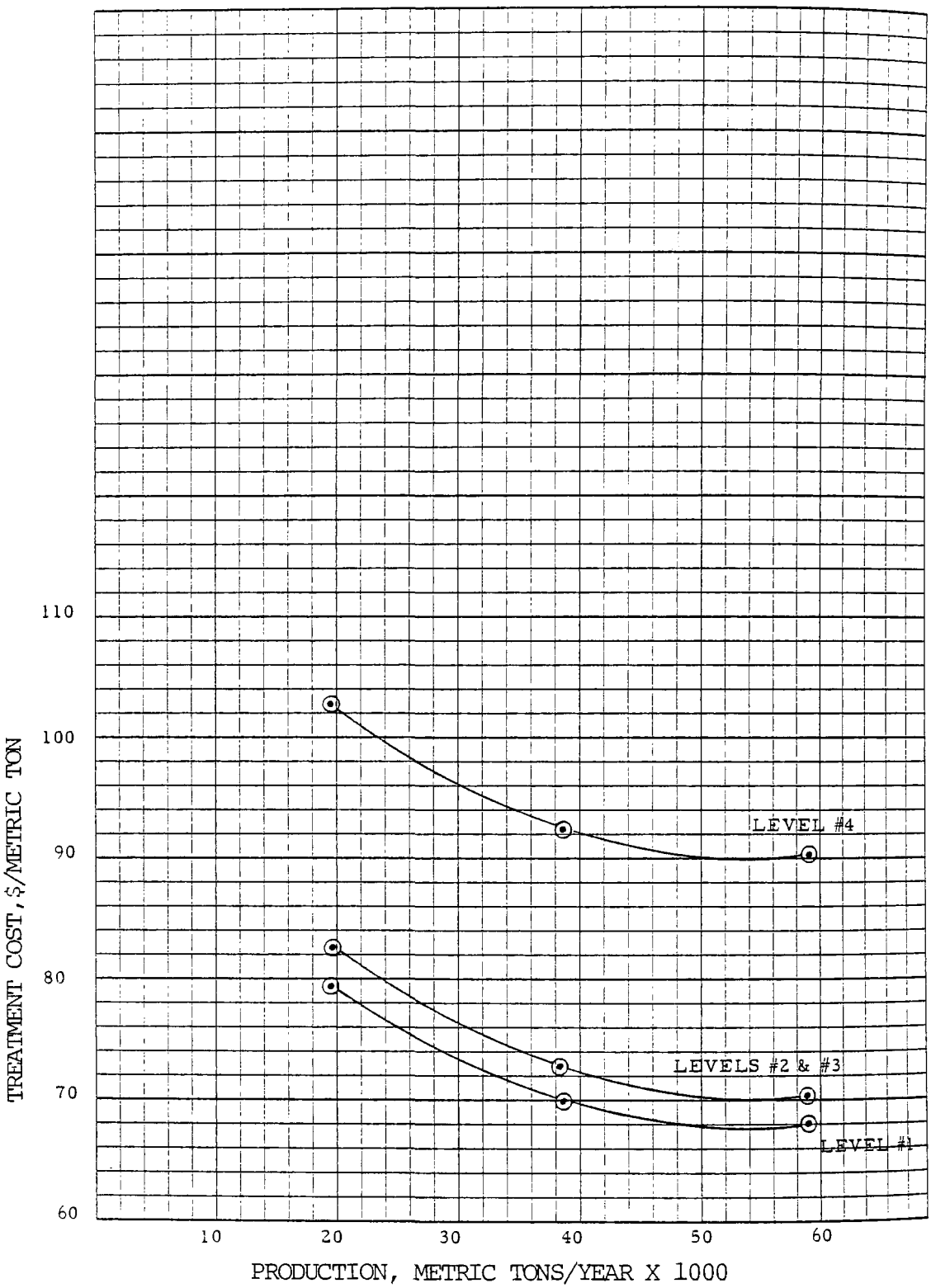

Figure 12-11. Annual unit treatment cost vs. production for the Hydrofluoric Acid Subcategory

treatment increased approximatley 70 percent and 10 percent respectively over the original model unit cost. There was no significant impact on the unit cost at other levels of treatment.

Table 12-23 presents a summary of the unit cost distribution between amortization, operation and maintenance cost components at various production and levels of treatment.

At the second, third and fourth levels of treatment, the cost estimates are based on part of the waste water flow being recirculated and the remaining flow being treated, thus the subsequent treatment units are sized and estimated for lower flows than if recycling were not practiced.

As explained under General Approach in Section 10, the costs of recirculation have been excluded from the cost estimates presented here.

For the model plant, the primary source of waste water is the kiln waste, a slurry formed when water is used to transport the solid residue ($CaSO_4$) after the reaction of fluorspar and sulfuric acid. Other sources of process waste result from air pollution control (scrubbers) and leaks, spills and washdown.

Model Plant Control Costs for Existing Sources

For the model plant control costs at the first level of treatment, the disposal of the sludge is on-site and hence the land requirements are fairly large. Chemicals, sludge hauling and disposal costs have a significant impact on the total annual costs. At the second and third levels of treatment however, amortization, labor and supervision costs constitute a major portion of the additional annual costs.

The fourth level of treatment is designed for recirculation of the major portion of the treated effluent and therefore, soda ash is used for neutralization in place of lime. Due to this change, chemical cost has a significant impact on the additional annual costs.

Model Plant Control Costs for New Sources

The basis of the selection of the model plant representing a new source is described earlier in this section. The estimated costs for three different models, having three different production levels are given in Tables 12-24, 12-25 and 12-26. Both the hydraulic and pollutant loads are directly proportional to the production, i.e., the waste flow per unit of production and the pollutant loading per unit of production are held constant.

TABLE 12-23 MODEL PLANT TREATMENT COSTS

Subcategory HYDROFLUORIC ACID Type of Regulation BAT

	PRODUCTION (kkg/yr)	FLOW (m3/day)	Annual Treatment Costs ($/kkg) LEVEL OF TREATMENT FIRST $	SECOND $	THIRD $	FOURTH $
Annual Operation and Maintenance	19,100	5,220	64.55	2.29	2.51	21.54
	38,200	10,450	59.31	1.43	1.65	20.68
	57,300	15,700	58.06	1.26	1.48	20.51
Annual Amortization	19,100	5,220	15.18	1.36	1.40	1.36
	38,200	10,450	11.31	0.99	1.03	0.99
	57,300	15,700	10.58	1.00	1.06	1.00
Total Cost	19,100	5,220	79.73	3.65	3.91	22.90
	38,200	10,450	70.62	2.42	2.68	21.67
	57,300	15,700	68.65	2.26	2.54	21.51

TABLE 12-24. MODEL PLANT TREATMENT COSTS

Subcategory	HYDROFLUORIC ACID	Type of Regulation	NSPS
Production	19,100 metric tons per year (21,057 tons per year)		
	54 metric tons per day (60 tons per day)		
Waste water flow	680 cubic meters per day.		

	LEVEL OF TREATMENT*
	FIRST
A. INVESTMENT COST	
Construction	$64,000
Equipment in place, including piping, fittings, electrical work and controls.....	327,000
Monitoring equipment in place.....	9,000
Engineering design and inspection.....	80,000
Incidentals, overhead, fees, contingencies...	80,000
Land.....	30,000
TOTAL INVESTMENT COST	$590,000
B. OPERATION AND MAINTENANCE COST	
Labor and supervision.	$56,000
Energy.....	6,100
Chemicals.....	44,000
Maintenance.....	56,000
Taxes and insurance...	17,700
Residual waste disposal.....	742,000
Monitoring, analysis and reporting.....	15,000
TOTAL OPERATION AND MAINTENANCE COST	$936,800
C. AMORTIZATION OF INVESTMENT COST	$91,112
TOTAL ANNUAL COST	$1,027,912

*First level represents the base cost of treatment system. Other levels represent the incremental cost above base cost.

TABLE 12-25. MODEL PLANT TREATMENT COSTS

Subcategory	HYDROFLUORIC ACID	Type of Regulation NSPS
Production	38,200 metric tons per year (42,115 tons per year)	
	109 metric tons per day (120 tons per day)	
Waste water flow	1370 cubic meters per day.	

	LEVEL OF TREATMENT*
	FIRST
A. INVESTMENT COST	
Construction	$94,500
Equipment in place, including piping, fittings, electrical work and controls.....	468,500
Monitoring equipment in place.....	9,000
Engineering design and inspection.....	114,400
Incidentals, overhead, fees, contingencies...	114,400
Land.....	60,000
TOTAL INVESTMENT COST	$860,800
B. OPERATION AND MAINTENANCE COST	
Labor and supervision.	$56,000
Energy.....	8,300
Chemicals.....	88,000
Maintenance.....	80,080
Taxes and insurance...	25,824
Residual waste disposal.....	1,480,000
Monitoring, analysis and reporting.....	15,000
TOTAL OPERATION AND MAINTENANCE COST	$1,753,204
C. AMORTIZATION OF INVESTMENT COST	$130,290
TOTAL ANNUAL COST	$1,883,494

*First level represents the base cost of treatment system. Other levels represent the incremental cost above base cost.

TABLE 12-26. MODEL PLANT TREATMENT COSTS

Subcategory HYDROFLUORIC ACID — Type of Regulation NSPS

Production 57,300 metric tons per year (63,173 tons per year)
163 metric tons per day (180 tons per day)
Waste water flow 2030 cubic meters per day.

	LEVEL OF TREATMENT*
	FIRST
A. INVESTMENT COST	
Construction	$120,700
Equipment in place, including piping, fittings, electrical work and controls.....	601,000
Monitoring equipment in place.....	9,000
Engineering design and inspection.....	146,140
Incidentals, overhead, fees, contingencies...	146,140
Land.....	84,000
TOTAL INVESTMENT COST	$1,106,980
B. OPERATION AND MAINTENANCE COST	
Labor and supervision.	$56,000
Energy.....	12,250
Chemicals.....	132,000
Maintenance.....	102,298
Taxes and insurance...	33,209
Residual waste disposal.....	2,226,000
Monitoring, analysis and reporting.....	15,000
TOTAL OPERATION AND MAINTENANCE COST	$2,576,757
C. AMORTIZATION OF INVESTMENT COST	$166,438
TOTAL ANNUAL COST	$2,743,195

*First level represents the base cost of treatment system.
Other levels represent the incremental cost above base cost.

Annual treatment cost as a function of production is shown graphically in Figure 12-12. Treatment cost per metric ton of product is given in Figure 12-13.

Table 12-27 presents a summary of the unit cost distribution between amortization and operation and maintenance components.

For the model plant, the dry solids generated in the kiln, are nauled to approved chemical dump sites, eliminating kiln waste slurry. The waste water sources are air pollution control (scrubbers), leak, spills and washdowns.

The cost of transporting dry kiln waste sludge to the approved chemical dump site has been included in the cost estimates. The cost of conveying the dry solids from the kiln operation to the trucks (for transporting to the dump site) is not included in the cost estimate. Such costs, which can vary widely with site conditions, are considered to be process costs and not part of treatment. A new plant would undoubtedly be designed for direct loading of dry kiln waste.

Since the sludge disposal is not on site, the land cost has negligible impact on total annual cost. However, the cost of transporting the dry solids to the dump site constitutes about 75 percent of the annual costs.

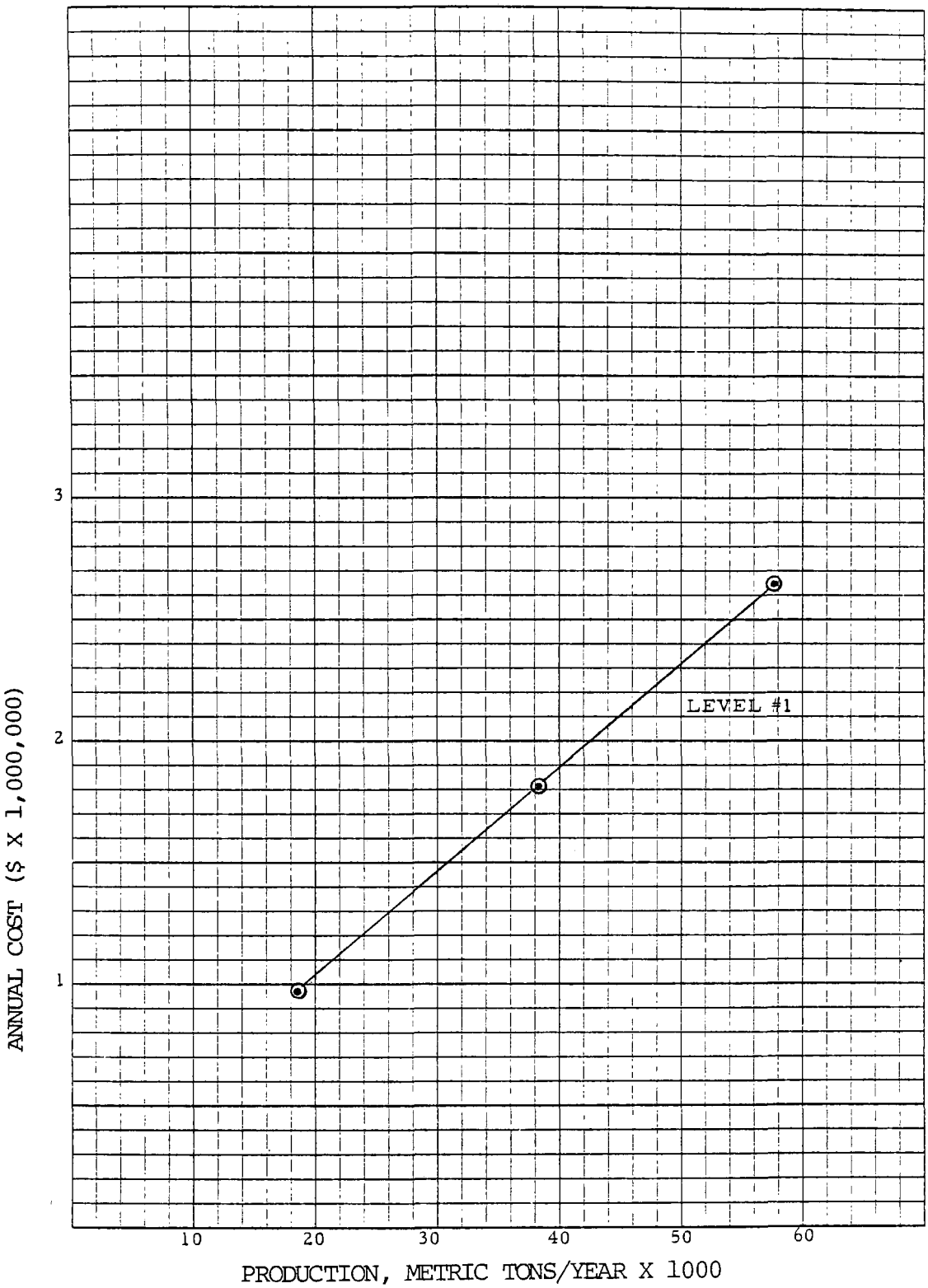

Figure 12-12. Annual treatment cost vs. production for the Hydrofluoric Acid Subcategory (NSPS)

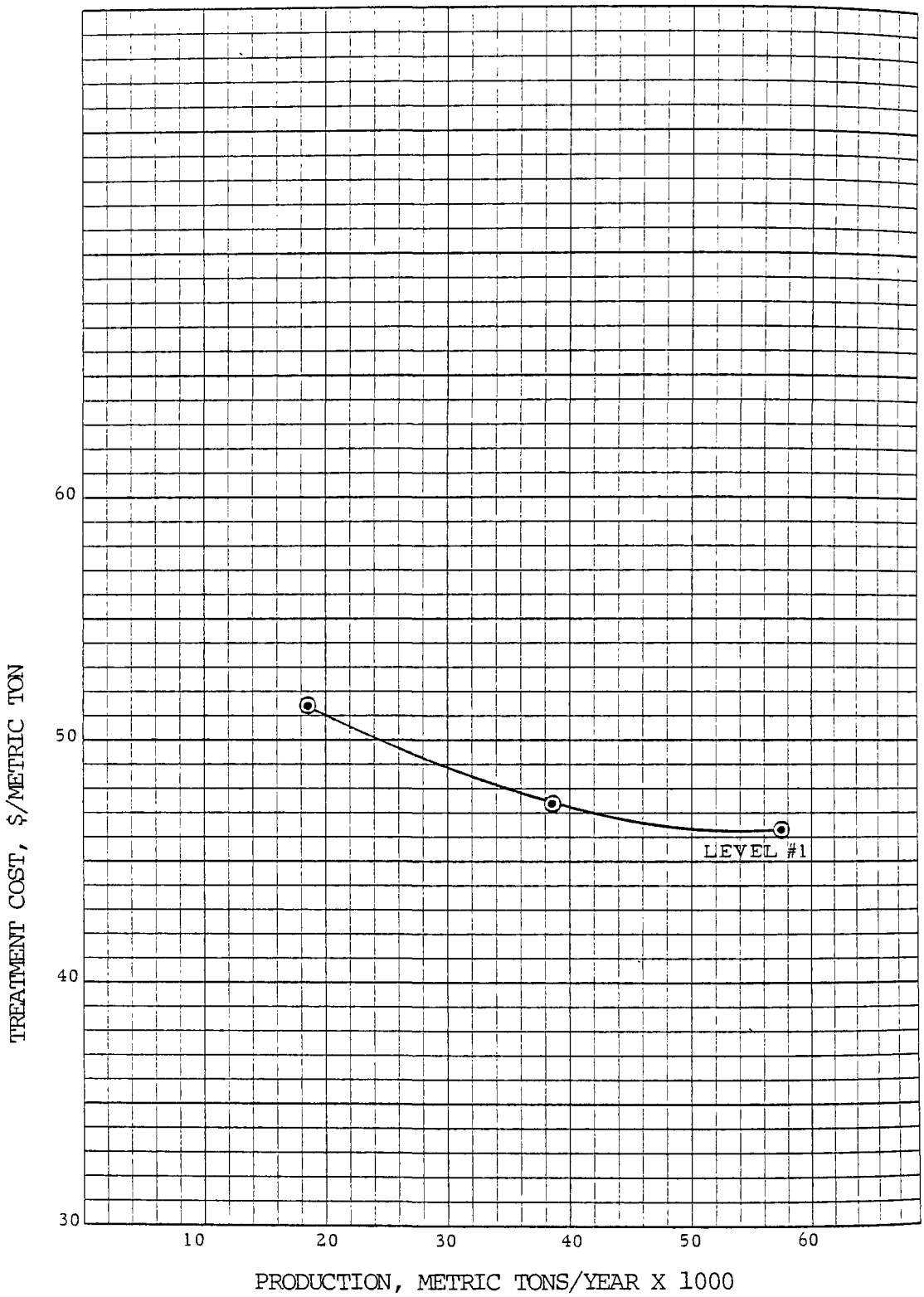

Figure 12-13. Annual unit treatment cost vs. production for the Hydrofluoric Acid Subcategory (NSPS)

TABLE 12-27 MODEL PLANT TREATMENT COSTS

Subcategory HYDROFLUORIC ACID Type of Regulation NSPS

	PRODUCTION (kkg/yr)	FLOW (m3/day)	Annual Treatment Costs ($/kkg) LEVEL OF TREATMENT FIRST $	SECOND $	THIRD $	FOURTH $
Annual Operation and Maintenance	19,100	680	49.05			
	38,200	1,370	45.90			
	57,300	2,030	44.97			
Annual Amortization	19,100	680	4.77			
	38,200	1,370	3.41			
	57,300	2,030	2.90			
Total Cost	19,100	680	53.82			
	38,200	1,370	49.31			
	57,300	2,030	47.87			

SECTION 13

HYDROGEN PEROXIDE INDUSTRY

13.1 ASSESSMENT OF THE WATER POLLUTION POTENTIAL

13.1.1 Industry Profile and Analytical Results

The organic process is the most commonly employed method in the manufacture of Hydrogen Peroxide. Hydrogen Peroxide is used as a bleaching agent in the textile, pulp and paper industries. Other uses include chemical manufacture (e.g. plasticizers and glycerine), waste water treatment, and as a rocket propellant.

The industrial profile data is presented in Table 13-1 and existing regulations in Table 13-2.

The priority pollutants found at significant concentrations in the raw waste at screening plant #765 were:

Pollutant	Concentration (ug/l)
Pentachlorophenol	4850
Phenol	29
Napthalene	11

During verification sampling of the same plant, it was discovered that the presence of organics were due to a weed killer used at the plant site, and were not process related. On the basis of these findings, this subcategory has been recommended for exclusion under Paragraph 8.

TABLE 13-1 - SUBCATEGORY PROFILE DATA SUMMARY

SUBCATEGORY	HYDROGEN PEROXIDE
Total subcategory capacity rate	
Total subcategory production rate	85,700 kkg/year
Number of plants in this subcategory	7
308 Data on file for	3
With total capacity of	102,200 kkg/year
With total production of	57,000 kkg/year
Representing capacity	
Representing production	66 percent
Plant production range:	
Minimum	5,560 kkg/year
Maximum	28,730 kkg/year
Average production	
Median production	
Average capacity utilization	
Plant age range:	
Minimum	15 years
Maximum	27 years
Wastewater flow range:	
Minimum	
Maximum	
Volume per unit product:	
Minimum	
Maximum	

Sources of data are Stanford Research Institute, Directory of Chemical Producers, U.S.A., 1977, U.S. Department of Commerce, Current Industrial Reports, December 1977; Energy and Environmental Analysis, Inc.; Draft Report, "Preliminary Economic Assessment of Effluent Limitations in the Inorganic Chemical Industry."

TABLE 13-2 - EXISTING REGULATIONS - EFFLUENT LIMITATION GUIDELINES

SUBCATEGORY Hydrogen Peroxide

SUBPART I (40CFR 415.90, 3/12/74)

		STANDARDS					
		BPCTCA		BATEA*		NSPS*	
Product Process	Parameters	Max.[1] kg/kkg (mg/l)	Avg.[2] k/kkg (mg/l)	Max. k/kkg (mg/l)	Avg. k/kkg (mg/l)	Max. k/kkg (mg/l)	Avg. k/kkg (mg/l)
Organic Process	TSS	0.8 (50.0)**	0.4 (25.0)	No discharge of pwwp[3]		No discharge of pwwp	
	TOC	0.44 (27.5)	0.22 (13.8)	No discharge of pwwp		No discharge of pwwp	
Electrolytic Process	TSS	0.005	0.0025	No discharge of pwwp		No discharge of pwwp	
	Cyanide (A)	0.0004	0.0002	No discharge of pwwp		No discharge of pwwp	

*Sections 415.93 and 415.95 were remanded and are presently reserved (41 FR 51601, November 23, 1976).

[1]Max. = Maximum of any one day.

[2]Avg. = Average of daily values for thirty consecutive days shall not exceed.

[3]pwwp = Process wastewater pollutants.

**Flow basis 16,000 l/kkg.

SECTION 14

TITANIUM DIOXIDE INDUSTRY

14.1 ASSESSMENT OF THE WATER POLLUTION POTENTIAL OF THE CHLORIDE PROCESS

14.1.1 Industry Profile and Analytical Results

Chloride Process Industry

Titanium dioxide is manufactured by both a chloride process and a sulfate process. TiO2 is a high volume chemical ranking within the first fifty of all U. S. chemical production. Over fifty percent of the titanium dioxide produced is used in paints, varnishes and lacquers. About one third is used in the paper and plastic industries. Other uses are found in ceramics, ink and rubber manufacturing.

The industrial profile data for this subcategory is presented in Table 14-1, while the existing regulations are in Table 14-2.

The raw waste was not sampled during screeing at Titanium Dioxide-Chloride Process Plant #172. No priority pollutants of significance were found in the treated effluent.

Verification sampling was conducted at two plants. Priority pollutants of significance found in the raw waste during verification sampling were:

Pollutant	Maximum Concentration Observed ug/l
Chromium	15200
Lead	5150
Nickel	6320
Zinc	3110

TABLE 14-1 - SUBCATEGORY PROFILE DATA SUMMARY

SUBCATEGORY	TITANIUM DIOXIDE CHLORIDE PROCESS
Total subcategory capacity rate	610,000 kkg/year
Total subcategory production rate	389,000 kkg/year
Number of plants in this subcategory	8
308 Data on file for	5
With total capacity of	184,600 kkg/year
With total production of	142,000 kkg/year
Representing capacity	30 percent
Representing production	37 percent
Plant production range:	
Minimum	16,900 kkg/year
Maximum	45,200 kkg/year
Average production	28,400 kkg/year
Median production	25,600 kkg/year
Average capacity utilization	77 percent
Plant age range:	
Minimum	6 years
Maximum	15 years
Wastewater flow range:	
Minimum	1,140 cubic meters/day
Maximum	4,770 cubic meters/day
Volume per unit product:	
Minimum	14 cubic meters/kkg
Maximum	99 cubic meters/kkg

Sources of data are Stanford Research Institute, Directory of Chemical Producers, U.S.A., 1977, U.S. Department of Commerce, Current Industrial Reports, December 1977; Energy and Environmental Analysis, Inc.; Draft Report, "Preliminary Economic Assessment of Effluent Limitations in the Inorganic Chemical Industry."

TABLE 14-2 - EXISTING REGULATIONS - EFFLUENT LIMITATION GUIDELINES

SUBCATEGORY Titanium Dioxide

SUBPART V (40CFR 415.220, 3/12/74)

		STANDARDS					
		BPCTCA*		BATEA*		NSPS*	
Product Process	Parameters	Max.[1] kg/kkg (mg/l)	Avg.[2] k/kkg (mg/l)	Max. k/kkg (mg/l)	Avg. k/kkg (mg/l)	Max. k/kkg (mg/l)	Avg. k/kkg (mg/l)
Chloride Process	TSS	4.6	2.3	2.6	1.3	2.6	1.3
	Iron	0.72	0.36	0.36	0.18	0.36	0.18
Sulfate Process	TSS	21.0 (100.0)**	10.5 (50.0)	10.6	5.3	10.6	5.3
	Iron	1.7 (8.1)	0.84 (4.0)	0.84	0.42	0.84	0.42

*Sections 415.220, 415.222, 415.223, and 415.225 were remanded and are presently reserved (41 FR 51601, November 23, 1976).

[1]Max. = Maximum of any one day.

[2]Avg. = Average of daily values for thirty consecutive days shall not exceed.

**flow basis 210,000 l/kkg.

A summary of daily and unit product raw waste loads for all plants sampled can be found in Table 14-3. Individual plant raw waste loads per unit product found in sampling can be found in Table 14-4.

Based on the total annual production of this subcategory and the average waste load generated per unit product, the estimated total priority pollutant raw waste loads generated each year for this subcategory are as follows:

Pollutant	Waste Load (kg/year)
Chromium	310,000
Lead	9300
Nickel	9700
Zinc	7400

14.1.2 Process Waste Sources and Waste Water Treatment Data

Chloride Process - General Description

The chloride process uses rutile or upgraded ilmenite ores as raw material, since the process requires relatively pure materials with a high titanium and a low iron content. For ilmenite ores, a beneficiation process removes a part or all of the iron from the low quality titanium ore. Several patented processes exist for the beneficiation and two to three are in current operation on a commercial scale. It has been claimed by the industry that the beneficiation process generates wastes, the volume and chemical characteristics of which are different from the chloride process waste alone, and different treatment technology has to be used for pollutant removal before discharge or disposal. One patented beneficiation process claims that the only waste generated is solid waste which can be disposed of in a landfill, but data on waste quality and quantity are not available for this process. It is therefore assumed that the wastes from the chloride process using beneficiation are different from the process using pure high grade titanium ore. Therefore, the subcategory, titanium dioxide, has been further classified into three separate categories; sulfate process using ilmenite ore, chloride process using rutile or upgraded titanium ore; chloride process using ilmenite ore. This section is restricted to the chloride process using rutile ore.

In the chloride process, the ore and coke are dried and then reacted with chlorine to form titanium tetrachloride. The titanium tetrachloride is then reacted with oxygen or air to form titanium dioxide and chlorine, the latter being recycled to the process. The chemical reaction taking place in the reactor is

TABLE 14-3. SUMMARY OF RAW WASTE LOADINGS FOUND IN SCREENING AND VERIFICATION SAMPLING

SUBCATEGORY TITANIUM DIOXIDE - CHLORIDE PROCESS

Pollutant	Loadings						
	kg/day			kg/kkg			No. of Plants Averaged
	Minimum	Average	Maximum	Minimum	Average	Maximum	
Priority							
Chromium, Cr	1.76	64.4	127	0.024	0.79	1.55	2
Lead, Pb	0.0032	2.0	4.0	0.00004	0.024	0.049	2
Nickel, Ni	0.14	2.04	3.93	0.002	0.025	0.048	2
Zinc, Zn	0.75	1.47	2.19	0.01	0.019	0.027	2
Conventional							
TSS	442	4136	7828	6.06	51.0	95.9	
Iron, Fe	7.57	768	1528	0.10	9.40	18.7	

TABLE 14-4. PRIORITY POLLUTANT RAW WASTE LOADS (in kg/kkg of Product)

SUBCATEGORY	TITANIUM DIOXIDE - CHLORIDE PROCESS	
POLLUTANT	PLANT	
	#559	#120
Chromium, Cr	1.55	0.024
Lead, Pb	0.049	0.00004
Nickel, Ni	0.048	0.002
Zinc, Zn	0.027	0.010

given as:

$$3C + 2TiO_2 + 4Cl_2 = 2\ TiCl_4 + CO_2 + 2CO \qquad (1)$$

The reaction takes place at a temperature of 800 - 1000 degrees C and a fluidized bed reactor is generally used. The product gases leaving the reactor consist of titanium tetrachloride, unreacted chlorine, carbon dioxide, carbon monoxide and minor amounts of heavy metal chlorides. The gases are cooled initially to 250 degrees C to remove the impurities, although in some cases purification is accomplished by washing the gases with liquefied titanium tetrachloride. Iron chloride and small amounts of vanadium, zirconium, and other trace metal chlorides are removed by centrifugation and the liquid recycled to the absorber. Titanium tetrachloride is liquefied from the gases after the first stage of cooling by further cooling to ambient temperature. Copper, hydrogen sulfide and, in some cases, proprietary organic complexing agents are added for purification to the condensed solution. Copper acts as a catalyst to decompose the phosgene formed in the $TiCl_4$ stream. Organic complexing agents aid in separation of the $TiCl_4$ from other chlorides such as cupric chloride and silicon tetrachloride.

The residual uncondensed gases generally consist of hydrochloric acid, chlorine, carbon monoxide, carbon dioxide, nitrogen, and some titanium tetrachloride. They are treated to remove acidic materials before being vented to the atmosphere.

The liquefied titanium tetrachloride contains impurities such as aluminum chloride, silicon tetrachloride, etc., which are removed by distillation. The distillate is the purified titanium tetrachloride and the impurities remain as a residual which becomes waste. The tail gases from the distillation column are scrubbed to remove acidic materials. The titanium tetrachloride product is then reacted with oxygen, as air, forming titanium dioxide and chlorine:

$$TiCl_4 + O_2 = TiO_2 + 2Cl_2 \qquad (2)$$

The rate of reaction is negligible below 600 degrees C but increases rapidly above this temperature, and is generally maintained between 1200 - 1400 degrees C for efficient reaction and conversion. The needed heat is supplied by passing the reactants through heat exchangers, by electric dischargers, or by use of fluidized beds. After the oxidation reaction, the titanium dioxide forms a solid and is separated from the gases either in cyclones, baghouse filters, or Cottrell precipitators. The residual chlorine is refrigerated and liquefied. The tail gases

are scrubbed with caustic soda to remove chlorine before being vented to the atmosphere. When air is used for oxidation, chlorine recovery is achieved by absorption in trichlorethylene, followed by distillation to remove chlorine. The titanium dioxide is then sent to the finishing operation where it is vacuum degassed and then treated with alkali, using a minimum amount of water to remove traces of absorbed chlorine and hydrochloric acid. The pigment is then milled, surface treated for end-use application, dried, and packaged for sale. A generalized process flow diagram, including the waste streams, is shown in Figure 14-1.

Water Use and Waste Source Inventory

Water use - Water is used in noncontact cooling, for scrubbing the tail gases from the purification and oxidation reactor to remove contaminants, and in some cases, in the finishing operation of the product. The total amount of water usage varies from 45.3 to 383 m3/kkg of TiO2 produced, as shown in Table 14-5. It can be seen in the same table that cooling water constitutes the major use of water and varies from 10.7 to 280 m3/kkg of TiO2 produced.

Waste sources -

A. Wastes from cooling chlorinator gas: The waste consists of solid particles of unreacted ore, coke, iron, and small amounts of vanadium, zirconium, chromium, and other heavy metal chlorides. They are either dissolved in water and sent to the waste water treatment facility or disposed of in landfill as a solid waste.

B. Chlorinator process tail gas scrubber waste: The uncondensed gases, after the liquefaction of titanium tetrachloride, are wet scrubbed to remove hydrogen chloride, chlorine, phosgene, and titanium tetrachloride and chlorine in the first stage. In the second stage, they are scrubbed with caustic soda to remove chlorine as hypochlorite.

C. Distillation bottom wastes: These contain copper, sulfide, and organic complexing agents added during purification in addition to aluminum, silicon, and zirconium chlorides. These are removed as waterborne wastes and reaction with water converts silicon and anhydrous aluminum chlorides to their respective oxides.

D. Oxidation tail gas scrubber wastes: The gases from the oxidation unit are cooled by refrigeration to liquefy and recover chlorine. The uncondensed off-gases are scrubbed with water or caustic soda to remove residual chlorine. When caustic soda is used as the scrubbing solution, the resulting solution of sodium

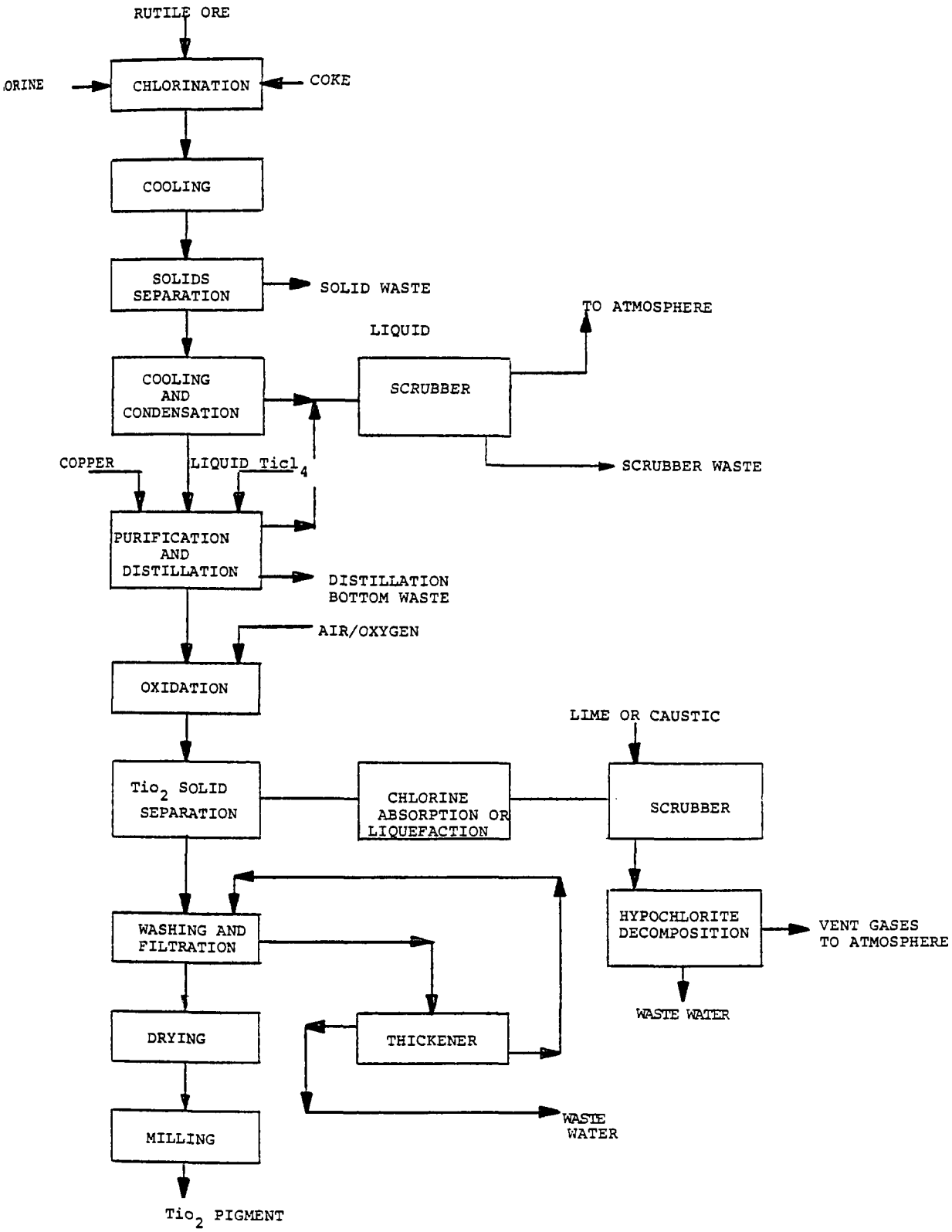

Figure 14-1. General process diagram for production of titanium dioxide (chloride process).

TABLE 14-5. WATER USAGE IN TITANIUM DIOXIDE-CHLORIDE PROCESS SUBCATEGORY

Water Use	Water usage at plants m^3/kkg of TiO_2		
	Plant #102	Plant #172	Plant #199
Non-contact cooling	182	10.66	280
Direct process contact	10.5	15.53	57
Indirect process contact	NA	0.72	22.78
Maintenance, equipment cleaning and work area washdown	6.65	0.52	2.11
Air pollution control	0.25	7.14	6.97
Non-contact ancillary uses	11.60	10.4	9.47
Sanitary & potable water	0.23	0.31	5.09
Total	211.23	45.28	383.42

NA = Not Available

hypochlorite is either sold, decomposed, sent to the waste water treatment facility, or discharged without treatment. The scrubber waste stream also contains titanium dioxide particulates.

E. Finishing operations waste: The liquid wastes from the finishing operation contains titanium dioxide as a suspended solid and dissolved sodium chloride formed by the neutralization of residual HCl with caustic soda.

Control and Treatment Practices

Two plants were visited and their waste waters sampled during the screening and verification programs. Titanium dioxide is manufactured at Plant #559 using the conventional chloride process. The solids, hereinafter called pit solids, (mainly unreacted ore, coke, iron, and trace metal chlorides, including $TiCl_4$), separated from the first stage cooling of the chlorinated gases, are slurried with water and sent to the waste water treatment facility. The waste water from the chloride process is mixed with the other product waste water and treated in combination. A flow diagram of the treatment facility, including the sampling locations, is shown in Figure 14-2. The slurried pit solids and the distillation column bottom residue are sent to a large settling pond where they are mixed with the other process waste water. The overflow from the settling pond is neutralized with ground calcium carbonate in a reactor. The scrubber and other waste water from the chloride process is mixed with other product waste water and combined with the settling pond effluent. The combined solutions are neutralized with lime in a second reactor, and then sent to a settling pond before discharge. Since the chloride process waste waters are mixed with other product waste water prior to treatment, the sampling results represent the total input mixture rather than the TiO_2 process raw wastes alone. Problems were encountered during the sampling of the pit solids and the distillation bottoms. The pipes carrying the wastes from the process discharged at the bottom of the settling pond and it was not possible to take the samples right at the outlet of the pipe. The combined sample of the two streams was taken at the surface of the discharge. It is probable that some solids settled before the stream reached the surface. Table 14-6 gives the waste flows and pollutant loadings for the streams sampled at Plant #559.

The second plant sampled, #172, makes titanium dioxide by the conventional chloride process. The waste water from the process, mainly the scrubber water, is collected in trenches and sent to a central reactor basin. Other discharges, including a part of the total rain runoff, are also collected in ditches and sent to the reactor basin. In the reactor basin sodium hydroxide is used for neutralization, and the resulting effluent is mixed

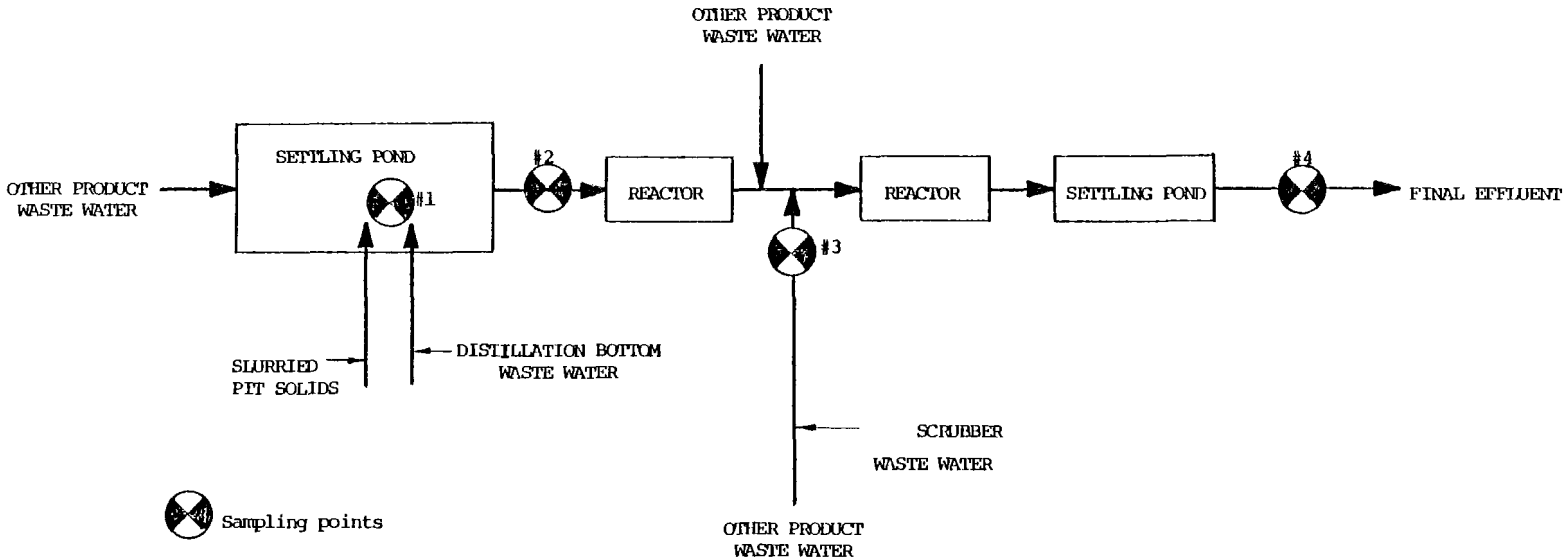

Figure 14-2. General flow diagram at Plant #559 showing the sampling points.
Titanium Dioxide (Chloride Process) Manufacture

TABLE 14-6. FLOW AND POLLUTANT CONCENTRATION DATA OF THE SAMPLED WASTE STREAMS FOR PLANT #559 PRODUCING TITANIUM DIOXIDE (CHLORIDE PROCESS)

Stream No.	Stream Description	Unit Flow m^3/kkg of TiO_2	SS Load kg/kkg of TiO_2	Iron Load kg/kkg of TiO_2	Chromium Load kg/kkg of TiO_2
1	Pit solids and distillation bottom waste	13.86 (1)	95.7	18.7	1.55
2	Settling pond overflow	13.86 (1)	0.22	>18.7 (1),(2)	0.36 (1)
3	TiO_2(Cl_2 process) scrubber and other product waste water	90	28.2 (1)	38.7 (1)	0.0096 (1)
4	Final effluent	104 (1)	2.3 (1)	0.45 (1)	0.0026 (1)

(1) The pollutant load was calculated by apportioning the mass emitted between the two waste streams on the basis of measured flows. This is clearly a very approximate process and the results must be used with caution.

(2) The effluent value is higher than the influent because of the introduction of the other product waste water in the pond contributing to higher load.

with the remaining rain water runoff and sent to the first of two retention basins arranged in series. The overflow from the second retention is pH adjusted with sulfuric acid before discharge. A simplified diagram of the treatment system, including the sampling points, is shown in Figure 14-3. Table 14-7 gives the waste flow and pollutant loadings for the streams sampled.

At Plant #199, all the process waste waters are combined, including storm water and sanitary waste water. The combined waste water is sent to a four-stage neutralization system, and the effluent from each of the four stages of neutralization is sent to a thickener. The thickener overflow is transferred to the first of three of settling ponds, also in series. The underflow from the thickener is heated to improve filtration characteristics and filtered in four rotary drum filters. The thickened solids from the filters are disposed of in a landfill and the filtrate, wash water, and vacuum pump seal water is recycled to the fourth stage of the neutralization train. The overflow from the last settling pond is discharged.

The process waste water streams at Plant #102 are received in two tanks, neutralized with lime, and then sent to a settling basin. The settled solids are retained in the settling lagoons. The plant has future plans for treating boiler blowdown, and cooling tower blowdown, leaks and spills with the process waste water.

At Plant #605, the unreacted ore and coke is disposed of as a solid waste in the pit. The waste water from the process is passed to two tanks for flow equalization, and the water is then reacted with ground limestone slurried in water. The treated solution is centrifugally treated to remove coarse solids which are separated and landfilled. A flocculating agent is added to the centrate and the solution is sent to a clarifier. The clarifier overflow is degassed and the pH adjusted with caustic soda (if required) before discharge.

Plant #172 mixes the process waste waters and the treatment consists of lime neutralization and settling. The influent and effluent from the treatment system was sampled and analyzed.

The distillation bottoms and the unreactd ore and coke are slurried with water at Plant #559 and mixed with the other process waste waters in a settling basin. The overflow from the basin is neutralized with limestone and then mixed with the scrubber waste water and waste waters from other products. The combined waste water is neutralized with lime and sent to a final settling pond, the overflow from which is discharged. The quantity of waste water from the titanium dioxide process, which is treated at the treatment facility, is quite small compared to the amounts from other product processes.

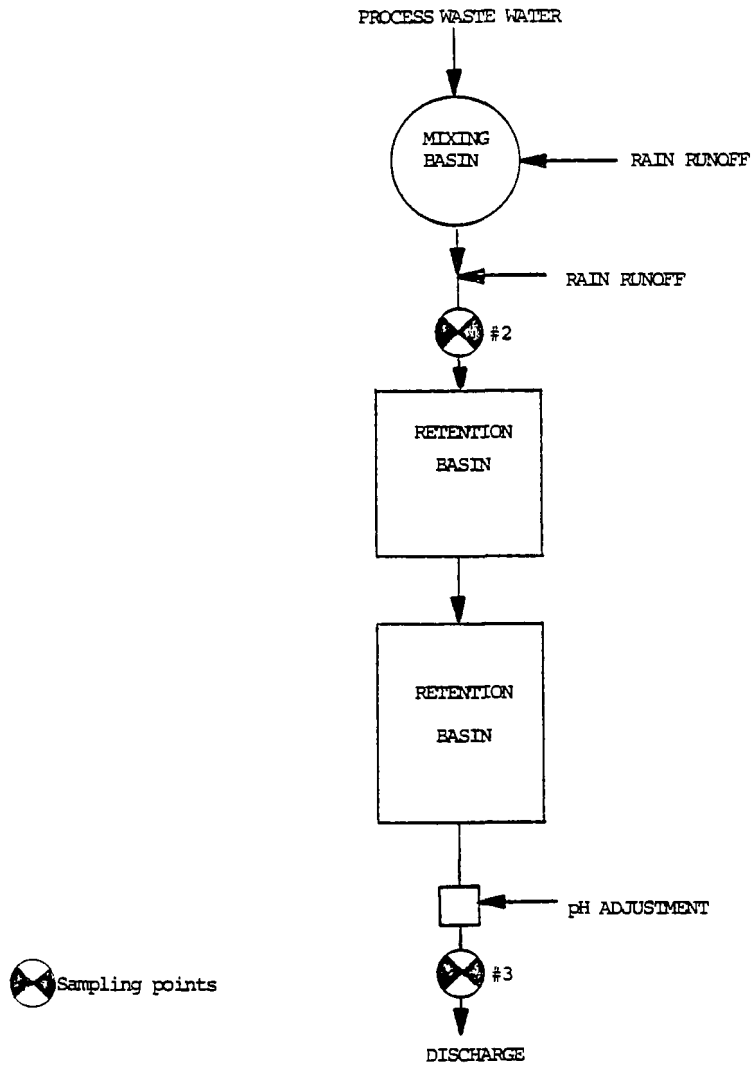

Figure 14-3. General flow diagram at Plant #172 showing the sampling points. Titanium Dioxide (Chloride Process) Manufacture

TABLE 14-7. FLOW AND POLLUTANT CONCENTRATION DATA OF THE SAMPLED WASTE STREAMS FOR PLANT #172 PRODUCING TITANIUM DIOXIDE (CHLORIDE PROCESS)

Parameter	Sampled Stream Description	
	Inlet to waste water treatment pond	Waste water treatment effluent
Stream no.	2	3
Flow, m^3/kkg	35.8	35.8
pH	7.9	7.6
TSS, kg/kkg of TiO_2	7.97	0.238
Zinc, kg/kkg of TiO_2	0.0096	0.003
Chromium, kg/kkg of TiO_2	0.0223	0.0006
Iron, kg/kkg of TiO_2	0.107	0.011
Nickel, kg/kkg of TiO_2	< 0.0008	< 0.00036

Evaluation of Industry, Production and Waste Flow Data

In most cases, the caustic soda or water used to scrub the tail gases is steam stripped before it is sent to the waste water treatment facility. The unreacted ore and coke is either disposed of as solid waste or slurried with water and sent to the treatment facility. The process waste water is combined and treated. The general treatment practice of the industry is lime neutralization and settling. The total solids generated at the treatment facility include the unreacted ore and coke, hydroxides of iron, titanium and other trace metals, and titanium dioxide. The quantity of solids generated and the waste water flows going to the treatment process is available for very few plants, but the data available is given in Tables 14-8 and 14-9.

Process Modification and Technology Transfer Options

1. Research to develop economical techniques to recover the vanadium and other metal values from the solid wastes generated from the process waste treatment system would appear to be a fruitful area of investment.

2. New plants can utilize refrigeration and high pressures for chlorine liquefaction. This would reduce or eliminate the chlorine residual problem in the tail gases. The capital cost to modernize old plants is high, but these plants should have a caustic soda or lime scrubber instead of a water scrubber to remove residual chlorine from the tail gases. Caustic or lime scrubbing removes a significant portion of the chlorine from the tail gases as seen from the analagous data for the chlorine subcategory given in Section 11.

3. When organic complexing agents are used for purification, they are eventually removed with the distillation bottoms. The distillation bottom wastes need to be segregated from the other process waste waters because treatment systems have not been designed for the removal of organic contaminants, and it would be too expensive to modify them. Distillation bottoms can be more efficiently disposed of by landfilling.

Best Management Practices

1. Provision should be made at all plants to collect storm water runoff from the plant site and send it to the treatment facility. Three out of a total of five existing plants are presently treating storm water runoff.

2. Solid wastes generated at the process waste water treatment facility may be contaminated with chromium, zirconium and vanadium. Land disposal of these wastes should be in a

TABLE 14-8. SOLID WASTE PRODUCED IN TITANIUM DIOXIDE-CHLORIDE PROCESS SUBCATEGOR

Plant	Amount of solids produced per unit of production kg/kkg of TiO_2
#102	563.4
#172	43.21
#199	552*

*This value includes the waste from the titanium tetrachloride production which is sold commercially. 62% of the total $TiCl_4$ produced at this plant is used for TiO_2 production and the rest marketed for sale.

TABLE 14-9. WASTE WATER FLOW FOR TITANIUM DIOXIDE-CHLORIDE PROCESS SUBCATEGORY

Plant	Unit waste water flow going to treatment facility m^3/kkg of TiO_2
#102	28.87
#172	35.8
#559	95.66

controlled landfill.

3. Leachate and permeate control is necessary if the solids from the treatment facility are landfilled on-site.

Model Plants and BPT Level Treatment System Specifications

The BPT model treatment selected for the chloride process TiO_2 wastes consists of:

A. Equalization of all liquid wastes in first stage lagoons.
B. Neutralization with lime and settling in second stage lagoons.

Chlorine-bearing tail gases are reacted with caustic soda or caustic potash, and all such chlorinous liquids are considered to be decomposed as part of the production process, with only the chlorine free residual products going to the treatment facility.

The costs of thermal decomposition, which are relatively insignificant, are discussed under the chlorine/caustic subcategory of Section 11. Thermal decomposition consists of cutting off the cooling water source after the exothermic hypochlorite reaction, and addition of small amounts of nickel and ferric chloride as catalysts. The solution is kept in a closed, insulated tank for four to five days for decomposition.

The rationale for selecting the model plants is discussed in the following paragraphs.

Production - Five plants produce titanium dioxide from rutile ore using the chloride process at a total production rate of 142,000 metric tons per year. Production ranges from a minimum of 16,900 kkg/year to a maximum of 45,200 kkg/year with a mean of 28,400 kkg/year and a median of 25,600 kkg/year. For waste water treatment cost estimates, three production levels were selected as model plants. These are 16,900 kkg/yr, 25,500 kkg/yr, and 45,200 kkg/yr. This range of production includes all United States plants.

Waste water flow - As discussed earlier and shown in Table 14-9, the unit acid waste water flow varies from 29 to 96 M^3/kkg of TiO_2 produced. The main reason for variation in the waste water flow is the difference in the chlorine recovery process from the tail gases and the amount of scrubbing liquid used. The waste water from the finishing operation is a significant portion of the total waste water and depends on the type of titanium dioxide end product desired. For model plants, a unit flow of 31 M^3/kkg was used.

Pollutant load - The primary pollutants occurring in the waste water are suspended solids, acidity and chlorides of ferric iron and other trace metals. The suspended solids (TSS) loading as seen in Table 14-8 varies from 43 to 563 kg/kkg of TiO_2, but the low value represents a plant that hauls untreated ore and coke, while the second value is based on unrepresentative sampling. Consequently, a higher suspended solids loading of 800 kg/kkg of TiO_2 is assumed for the model plants.

Treatment Chemicals - At the BPT treatment level, lime is used for neutralization and precipitation. Based on the data available for one plant, the rate of lime addition is assumed to be 337 kg/kkg of TiO_2.

Generation of Solids - Using a unit waste flow of 31 m^3/kg (7,400 gallons per ton of product), the solids generated are those present in the influent (5% by weight = 1.55 kkg/kkg) plus the lime added for neutralization (.337 kg/kkg) or a total of 1.89 kkg solids per kkg of product. Solids are considered to be accumulated in clay lined lagoons, with periodic mechanical removal to on-site storage piles in clay lined areas draining to the lagoons.

14.2 TECHNOLOGY BASED POLLUTION ABATEMENT

14.2.1 Advanced Level Treatment Applications

Control of Significant Observed Priority Pollutants

Pollutants to be controlled are the common heavy metals found in the ore (i.e., chromium, lead, nickel, and zinc). Although coke and certain proprietary organic complexing agents are used in the chloride process, the production of chlorinated organic priority pollutants is insignificant and does not warrant specific treatment.

Not all of the priority pollutants listed above are found in all ores of the same general type, nor are they found in all plants utilizing the same process. However, the chosen technologies at the various levels will be reasonably effective in removing the heavy metal group.

Removal Technologies Available

Alkaline substances and sulfide compounds are used to control the heavy metals by precipitation as metallic hydroxides, carbonates or sulfides. Ion exchange can remove metals from clarified solutions, but is seldom specific enough to remove only

the trace metals, and in solutions saturated with calcium and other metals is not effective. Lime neutralization appears to reduce the level of arsenic in actual plant waste waters, but the reaction of sulfide with arsenic is too slow to be of practical value in waste water treatment. Lime treatment combined with ferric iron (added or already present in the waste stream) may be the most effective means of controlling arsenic.

Selection of Technology to be Applied at Each Level

Chloride process - BPT (Level 1) The chloride process wastes are equalized, neutralized with lime to a pH range of 6 to 9, and settled in lagoons before discharge.

Level 2 - Second-stage lime treatment is added to precipitate metallic hydroxides, which are then filtered before discharge.

Level 3 - Ferrous sulfide treatment is added ahead of the Level 2 filter to precipitate the heavy metals more effectively.

Alkaline precipitation was chosen at Level 2 because it readily supplements existing lime neutralization by the simple addition of filtration and increasing the Level 1 lime dosage. Sulfide precipitation was chosen at Level 3 because it provides a polishing treatment for most residual heavy metals at a nominal incremental cost beyond Level 2 treatment.

Figures 14-4, 14-5, and 14-6 show the model treatment systems adopted for the chloride process.

Equipment functions - Chloride Process - BPT treatment is essentially lagooning with lime neutralization, using no special equipment except a lime feeder and mixer.

In Level 2, second stage lime treatment is followed by gravity clarification and multi-media filtration, with necessary pH controls.

In Level 3, ferrous sulfide is added ahead of the Level 2 filter, to react with residual heavy metals more completely than in the alkaline precipitation step at Level 2.

Chemicals and handling - Chloride Process - Lime and hydrochloric acid are fed with conventional equipment at all levels, and ferrous sulfide is prepared on-site by mixing ferrous sulfate with sodium bisulfide. When normal dust control and good ventilation are used, there should be no adverse effects from handling these chemicals.

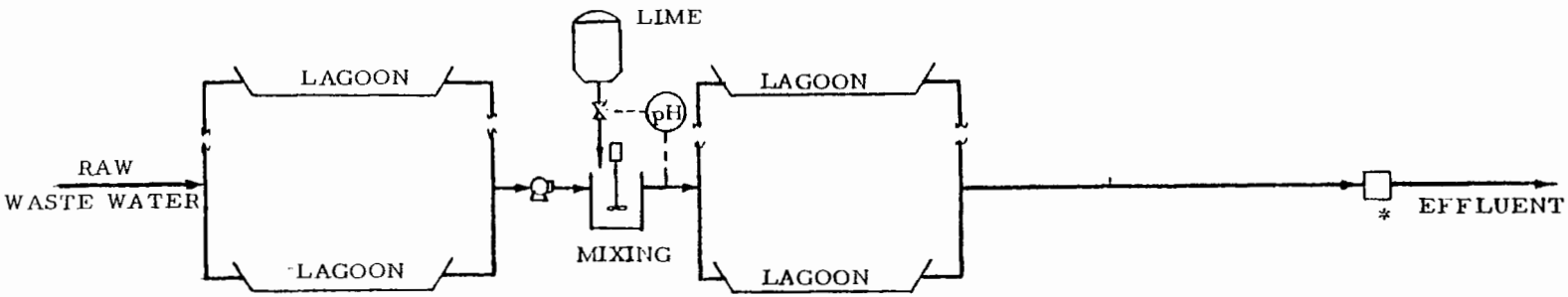

*Includes flow monitoring, pH monitoring and sampler.

Figure 14-4. Waste water treatment Level 1 for titanium dioxide - chloride process.

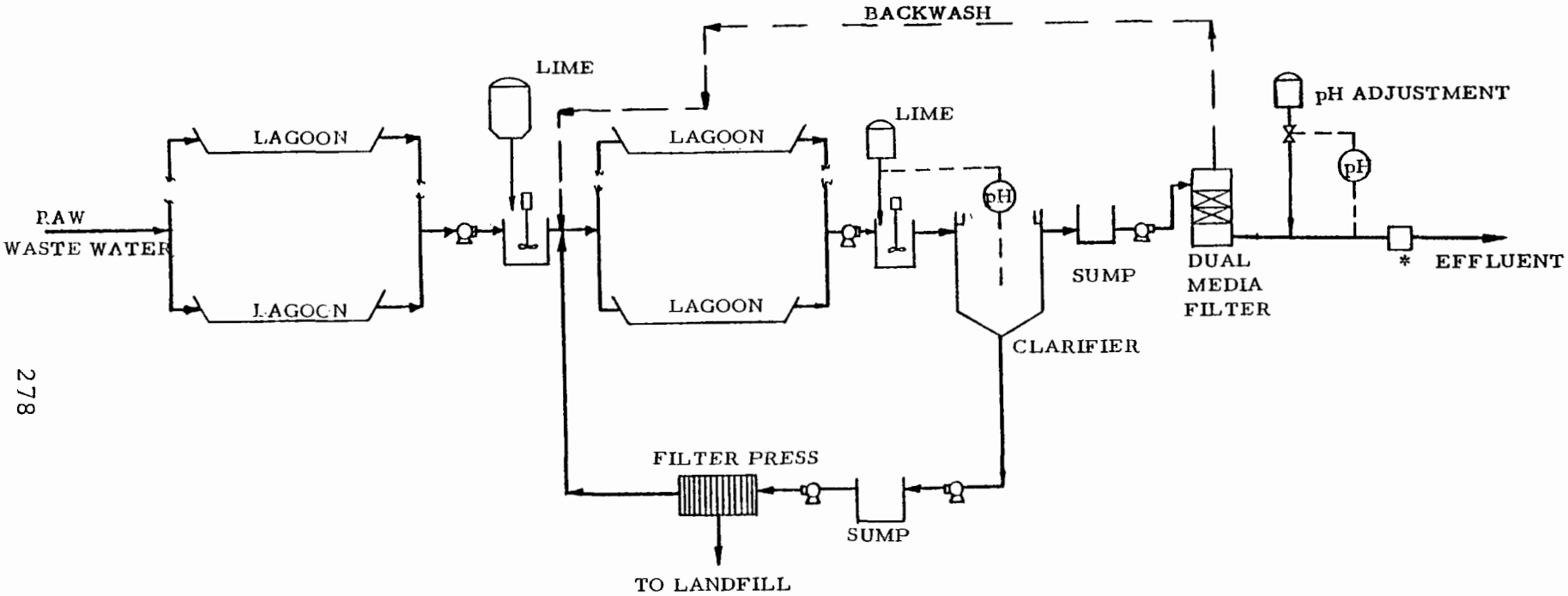

*Includes flow monitoring, pH monitoring and sampler.

Figure 14-5. Waste water treatment Level 2 for titanium dioxide - chloride process.

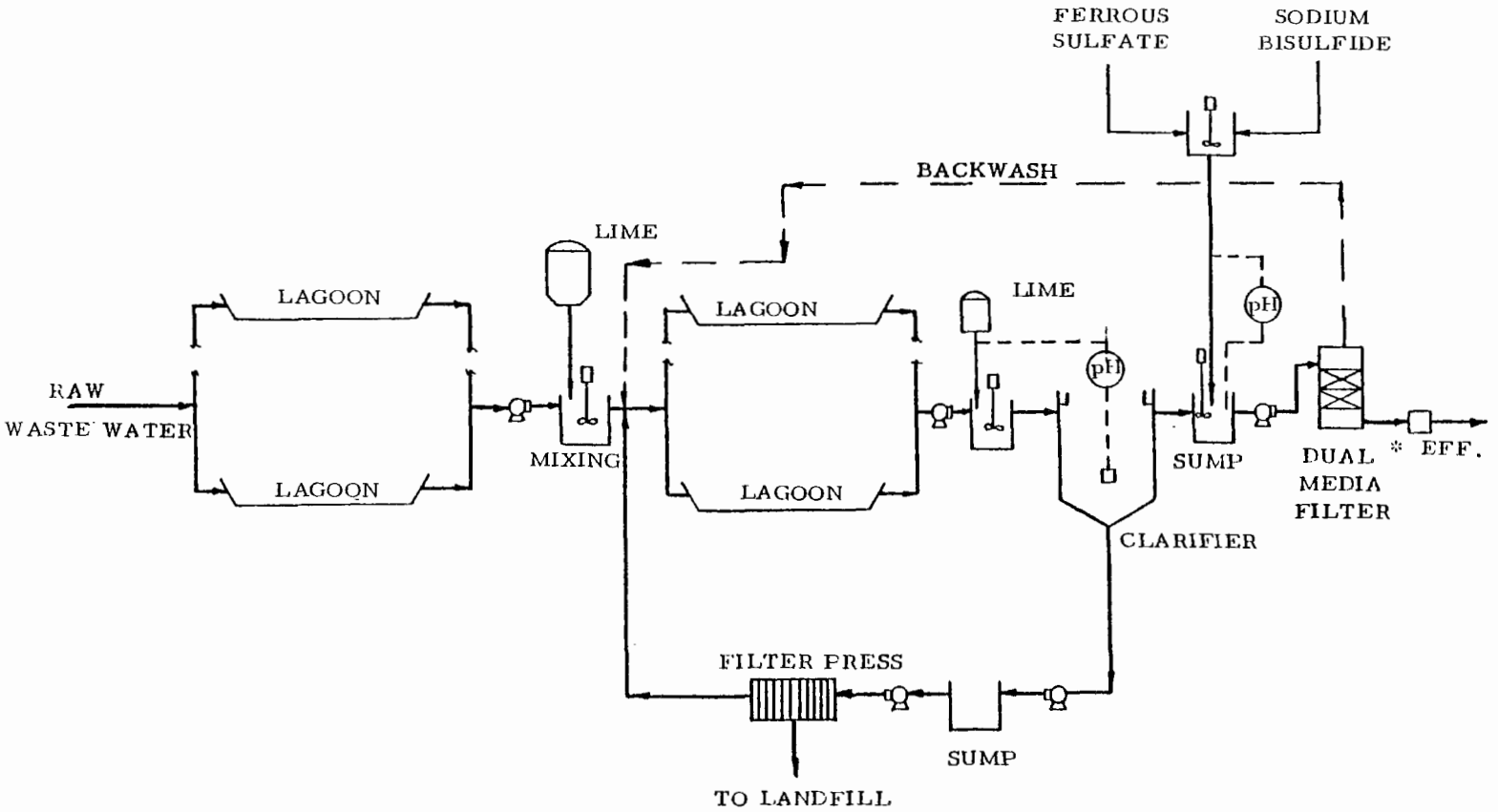

*Includes flow monitoring, pH monitoring and sampler.

Figure 14-6. Waste water treatment Level 3 for titanium dioxide - chloride process.

Separation and removal of solids - Chloride Process - Inert ore fractions and precipitated solids are accumulated in clay-lined lagoons, which are alternately drained. Solids are mechanically removed to self-draining 18 ft. High storage piles on land provided at the site for a 10 year operating period. At Levels 2 and 3, small amounts of heavy metal precipitates in clarifier underflow are filter pressed and hauled to a secure landfill.

Monitoring requirements - Chloride Process - Simple field tests for pH and dissolved sulfide are used for internal process monitoring. It should not be necessary to perform frequent tests for the various heavy metals, except for compliance testing required by agency permits. Samples are usually flow-proportioned 24 hour composites, analyzed by atomic absorption at a commercial laboratory.

14.2.2 Base Level Performance Characteristics for BPT Pollutant Removal

Chloride Process

Waste waters from chloride process titanium dioxide manufacture are similarly treated at all facilities. Treatment typically consists of neutralization, final clarification and ponding. Two plants dispose of unreacted ore and coke residue (pit solids) as solid waste and treat all other wastes with neutralization and settling.

BPT technology has been specified as solids settling followed by neutralization of all wastes and clarification to remove suspended solids.

Treated effluent quality data from Plant #172 and Plant #559 are presented in Table 14-10. Plant #172 disposes of its pit solids as solid waste and hence does not have a raw waste load as great as Plant #559.

Raw waste priority pollutants found in significant concentrations during verification sampling were presented earlier. The following were selected pollutants which might require regulation: chromium, lead, nickel, and zinc. Verification sampling results for Plant #559 and #172 are presented in Table 14-10.

Base Level Performance Characteristics for BPT Pollutant Removal

Table 14-11 presents effluent quality achievable through implementation of BPT or Level 1 treatment technology for

TABLE 14-10. RAW WASTE AND TREATED EFFLUENT QUALITY AT TITANIUM DIOXIDE - CHLORIDE PROCESS PLANTS

Verification Sampling:

Pollutant	Plant #172 Raw Waste kg/kkg	Plant #172 Treated Effluent mg/l	Plant #172 Treated Effluent kg/kkg	Plant #559* Raw Waste kg/kkg	Plant #559* Treated Effluent mg/l
Total Suspended Solids	6.06	6.67	0.245	95.9	23.0
Iron, Fe	0.104	0.327	0.012	18.7	4.4
Chromium, Cr	0.024	0.017	0.00062	1.55	0.025
Lead, Pb	0.00004	<0.0023	<0.000084	0.049	<0.0023
Nickel, Ni	0.002	<0.010	<0.00037	0.048	0.005
Zinc, Zn	0.010	0.090	0.0033	0.027	0.0617
Avg. Flow (m^3/kkg)		35.9		13.9	

Monitoring Data - Plant #172 Treated Effluent

Pollutant (Average)	mg/l	kg/day	kg/kkg
Total Suspended Solids, TSS	3.14	8.34	0.114
Chromium, Cr	0.004	0.013	0.00018
Copper, Cu	0.010	0.027	0.00037
Zinc, Zn	0.012	0.028	0.00038

* Loads in effluent not included because it includes other process wastes.

TABLE 14-11 CONTROL PARAMETER LIMITATIONS
SUBCATEGORY: Titanium Dioxide - Chloride Process
Level of Treatment: 1
Waste Water Flow: 31 m3/kkg

Pollutant	Subcategory Performance (mg/l)	(1) VFR	Quality Limit (mg/l)		Emission Limit (kg/kkg)	
			30 day Aver	24 hr Max	30 day Aver	24 hr Max
BPT Pollutants:						
Total Suspended Solids, TSS	6.2	2.0	37.5	75	1.2	2.4
Iron, Fe	0.3 (2)	3.0	2.0	6.0	0.062	0.19
Proposed Priority Pollutants						
Chromium, Cr	0.01	2.0	0.1	0.2	0.003	0.006
Lead, Pb	<0.004 (2)	2.0	0.5	1.0	0.016	0.031
Nickel, Ni	<0.01 (2)	2.0	0.5	1.0	0.016	0.031
Zinc, Zn	0.02	2.0	0.5	1.0	0.016	0.031

(1) - VFR: ratio of the 24 hour variability factor to the 30 day variability factor.

(2) - Verfication Sampling

titanium dioxide manufacture by the chloride process.

Base Level Performance Characteristics for Priority Pollutant Removal

Also presented in Table 14-11 is the achievable effluent quality through implementation of BPT technology for additional priority pollutants found to be significant in screening and verification of titanium dioxide plants.

Pretreatment Applications

Chloride Process

Presently no chloride process plant is discharging to a POTW, however, BPT technology would be applicable to pretreatment should such a discharge occur in the future.

Response to Remand Issues

Chloride Process

The effluent limitations for titanium dioxide by chloride process were remanded as they applied to a process that combines beneficiation of a low grade ilmenite ore and chlorination. The original guidelines were only applicable to discharges resulting from chloride process wastes, and did not include wastes from beneficiation. Only two plants presently use the cnloride ilmenite process. However, the beneficiation step is integrated with the manufacturing process in such a way at each plant that waste loads cannot be separately measured.

As a result of the remand an additonal subcategory, titanium dioxide by chloride-ilmenite process, has been assigned. However, further studies are necessary before limitations can be developed for this subcategory.

14.2.3 Estimated Performance of Advanced Level Systems

Advanced Level Performance Estimates for BPT and Priority Pollutant Removal

Tables 14-12 and 14-13 present estimated achievable effluent quality through implementation of advanced technologies.

TABLE 14-12 CONTROL PARAMETER LIMITATIONS
SUBCATEGORY: Titanium Dioxide - Chloride Process
Level of Treatment: 2
Waste Water Flow: 31 m3/kkg

Pollutant	Treatability (mg/l)	(1) VFR	Quality Limit (mg/l)		Emission Limit (kg/kkg)	
			30 day Aver	24 hr Max	30 day Aver	24 hr Max
BPT Pollutants:						
Total Suspended Solids, TSS	15	2.0	15	30	0.46	0.93
Iron, Fe	2.0	3.0	2.0	6.0	0.062	0.19
Proposed Priority Pollutants						
Chromium, Cr	0.05	2.0	0.05	0.1	0.0016	0.0031
Lead, Pb	0.1	2.0	0.1	0.2	0.0031	0.0062
Nickel, Ni	0.1	2.0	0.1	0.2	0.0031	0.0062
Zinc, Zn	0.4	2.0	0.4	0.8	0.0012	0.0024

(1) - VFR: ratio of the 24 hour variability factor to the 30 day variability factor.

TABLE 14-13 CONTROL PARAMETER LIMITATIONS
SUBCATEGORY: Titanium Dioxide - Chloride Process
Level of Treatment: 3
Waste Water Flow: 31 m3/kkg

Pollutant	Treatability (mg/l)	(1) VFR	Quality Limit (mg/l) 30 day Aver	Quality Limit (mg/l) 24 hr Max	Emission Limit (kg/kkg) 30 day Aver	Emission Limit (kg/kkg) 24 hr Max
BPT Pollutants:						
Total Suspended Solids, TSS	15	2.0	15	30	0.46	0.93
Iron, Fe	2.0	3.0	2.0	6.0	0.062	0.19
Proposed Priority Pollutants						
Chromium, Cr	0.05	2.0	0.05	0.1	0.0016	0.0031
Lead, Pb	0.1	2.0	0.1	0.2	0.0031	0.0062
Nickel, Ni	0.1	2.0	0.1	0.2	0.0031	0.0062
Zinc, Zn	0.2	2.0	0.2	0.4	0.0062	0.012

(1) - VFR: ratio of the 24 hour variability factor to the 30 day variability factor.

New Source Applications

The control and treatment alternative considered as applicable to new chloride process titanium dioxide facilities is BPT technology. An in-plant control alternative is the disposal of pit solids as solid wastes, as is presently practiced at one plant. This will substantially reduce the raw waste pollutant loads requiring treatment.

14.2.4 Cost Estimates - Chloride Process

Discussion

The costs shown at each level of treatment correspond to the model plant BPT (Level 1) system and one or more alternative BAT systems (Level 2, 3) which may add or modify the existing BPT system to meet more stringent priority pollutant removal requirements. The BAT also furnishes a higher effluent quality with respect to the conventional and nonconventional parameters.

For the chloride process, the cost estimates are developed at 1st, 2nd and 3rd levels of treatment.

Summary

The estimated costs of three models having different production levels are given in Tables 14-14, 14-15 and 14-16. Annual treatment costs as a function of production are shown graphically in Figure 14-7. Similarly, treatment costs per metric ton of product are given in Figure 14-8.

Table 14-17 presents a summary of the unit cost distribution between amortization and the operation and maintenance cost components at various production and levels of treatment.

In model plant costs for existing sources at the base level of treatment, amortization, chemicals and the residual waste disposal costs have a significant impact on the annual costs. At treatment Levels 2 & 3, amortization, chemicals and labor constitute a major portion of the additional annual costs.

TABLE 14-14. MODEL PLANT TREATMENT COSTS

Subcategory TITANIUM DIOXIDE Chloride Type of Regulation BAT

Production 16,900 metric tons per year (18,632 tons per year)
48 metric tons per day (53 tons per day)

Waste water flow 1485 cubic meters per day.

	LEVEL OF TREATMENT*	
	FIRST	SECOND
A. INVESTMENT COST		
Construction	$368,500	$49,000
Equipment in place, including piping, fittings, electrical work and controls.....	209,000	389,000
Monitoring equipment in place.....	9,000	
Engineering design and inspection.....	117,300	87,600
Incidentals, overhead, fees, contingencies...	117,300	87,600
Land.....	192,000	6,000
TOTAL INVESTMENT COST	$1,013,100	$619,200
B. OPERATION AND MAINTENANCE COST		
Labor and supervision.	$56,000	$84,000
Energy.....	3,700	4,300
Chemicals.....	140,000	34,100
Maintenance.....	82,110	61,320
Taxes and insurance...	30,393	18,576
Residual waste disposal.....	108,000	9,000
Monitoring, analysis and reporting.....	15,000	7,500
TOTAL OPERATION AND MAINTENANCE COST	$435,203	$218,796
C. AMORTIZATION OF INVESTMENT COST	$133,592	$99,767
TOTAL ANNUAL COST	$568,795	$318,563

*First level represents the base cost of treatment system. Other levels represent the incremental cost above base cost.

TABLE 14-15. MODEL PLANT TREATMENT COSTS

Subcategory TITANIUM DIOXIDE Chloride Type of Regulation BAT

Production 25,500 metric tons per year (28,113 tons per year)
72 metric tons per day (80 tons per day)
Waste water flow 2240 cubic meters per day.

	LEVEL OF TREATMENT*	
	FIRST	SECOND
A. INVESTMENT COST		
Construction	$525,000	$50,800
Equipment in place, including piping, fittings, electrical work and controls.....	228,000	450,000
Monitoring equipment in place.....	9,000	
Engineering design and inspection.....	152,400	100,160
Incidentals, overhead, fees, contingencies...	152,400	100,160
Land.....	276,000	6,000
TOTAL INVESTMENT COST	$1,342,800	$707,120
B. OPERATION AND MAINTENANCE COST		
Labor and supervision.	$56,000	$84,000
Energy.....	4,000	5,500
Chemicals.....	211,000	51,000
Maintenance.....	106,680	70,112
Taxes and insurance...	40,284	21,213
Residual waste disposal.....	164,000	11,000
Monitoring, analysis and reporting.....	15,000	7,500
TOTAL OPERATION AND MAINTENANCE COST	$596,964	$250,325
C. AMORTIZATION OF INVESTMENT COST	$173,568	$114,072
TOTAL ANNUAL COST	$770,532	$364,397

*First level represents the base cost of treatment system.
Other levels represent the incremental cost above base cost.

TABLE 14-16. MODEL PLANT TREATMENT COSTS

Subcategory TITANIUM DIOXIDE Chloride Type of Regulation BAT

Production 45,200 metric tons per year (49,833 tons per year)
129 metric tons per day (142 tons per day)
Waste water flow 3980 cubic meters per day.

	LEVEL OF TREATMENT*	
	FIRST	SECOND
A. INVESTMENT COST		
Construction	$815,500	$76,800
Equipment in place, including piping, fittings, electrical work and controls.....	283,000	590,000
Monitoring equipment in place.....	9,000	
Engineering design and inspection.....	221,500	133,360
Incidentals, overhead, fees, contingencies...	221,500	133,360
Land.....	504,000	6,000
TOTAL INVESTMENT COST	$2,054,500	$939,520
B. OPERATION AND MAINTENANCE COST		
Labor and supervision.	$56,000	$84,000
Energy.....	4,600	7,650
Chemicals.....	374,000	95,000
Maintenance.....	155,050	93,352
Taxes and insurance...	61,635	28,185
Residual waste disposal.....	294,000	20,000
Monitoring, analysis and reporting.....	15,000	7,500
TOTAL OPERATION AND MAINTENANCE COST	$960,285	$335,687
C. AMORTIZATION OF INVESTMENT COST	$252,266	$151,883
TOTAL ANNUAL COST	$1,212,551	$487,570

*First level represents the base cost of treatment system.
Other levels represent the incremental cost above base cost.

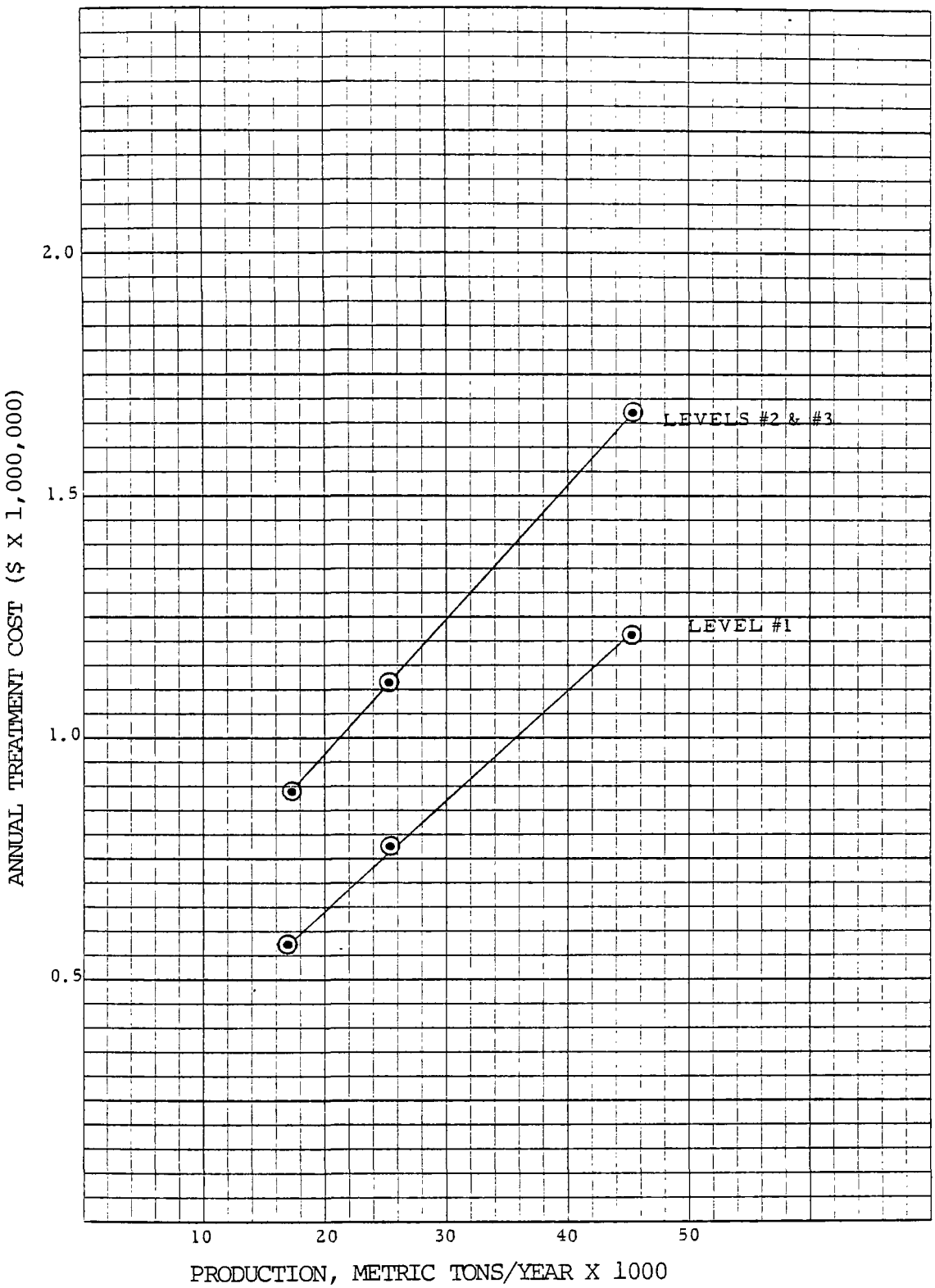

Figure 14-7. Annual treatment cost vs. production for the Titanium Dioxide Subcategory, Chloride Process

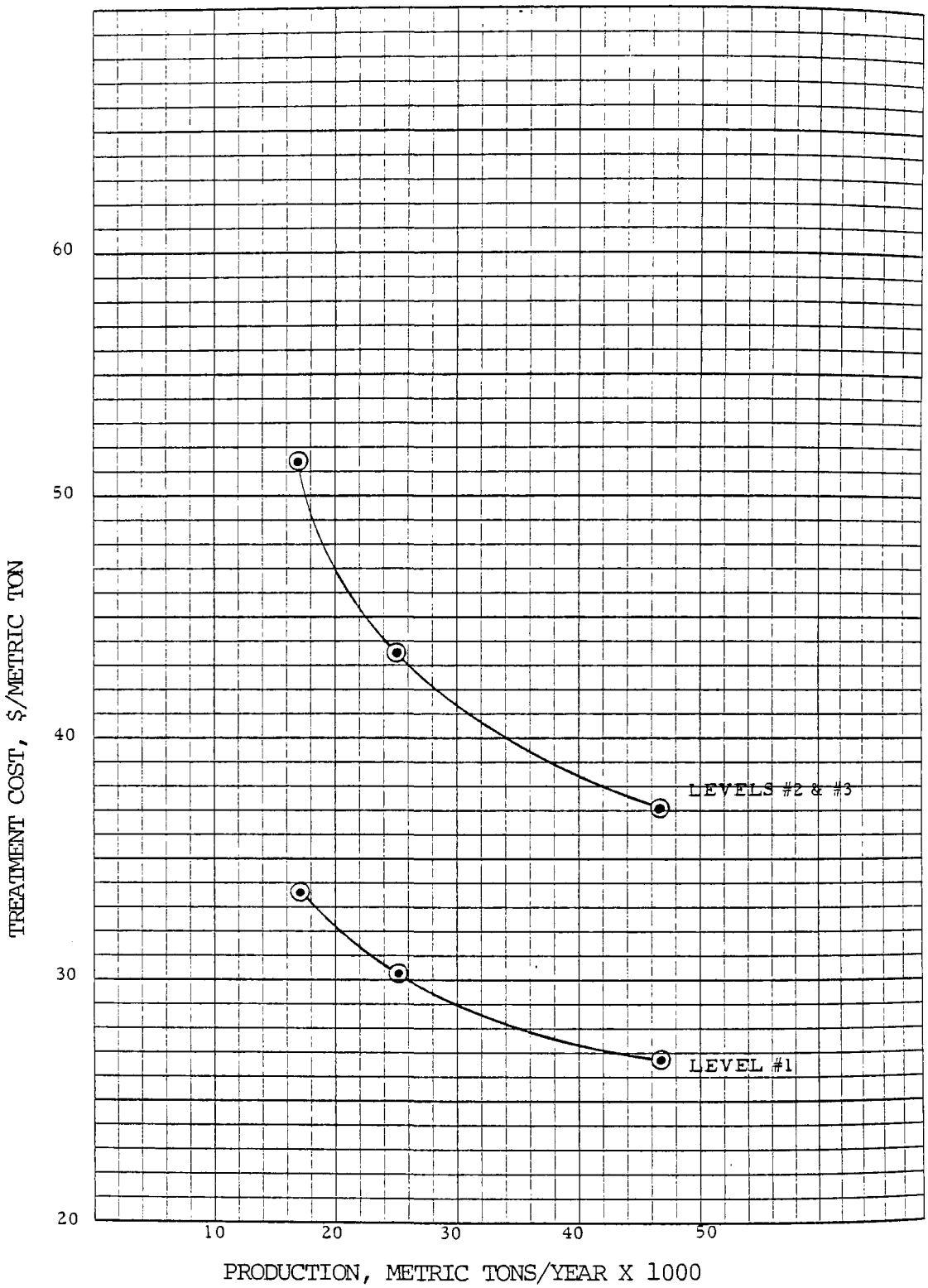

Figure 14-8. Annual unit treatment cost vs. production for the Titanium Dioxide Subcategory, Chloride Process

TABLE 14-17 MODEL PLANT TREATMENT COSTS

Subcategory TITANIUM DIOXIDE Chloride Type of Regulation BAT

	PRODUCTION (kkg/yr)	FLOW (m3/day)	Annual Treatment Costs ($/kkg) LEVEL OF TREATMENT FIRST $	SECOND $	THIRD $	FOURTH $
Annual Operation and Maintenance	16,900	1,485	25.75	12.95	13.27	Not Applicable
	25,500	2,240	23.41	9.82	10.09	
	45,200	3,980	21.25	7.43	7.65	
Annual Amortization	16,900	1,485	7.90	5.90	6.07	
	25,500	2,240	6.81	4.47	4.60	
	45,200	3,980	5.58	3.36	3.47	
Total Cost	16,900	1,485	33.66	18.85	19.33	
	25,500	2,240	30.22	14.29	14.68	
	45,200	3,980	26.83	10.79	11.12	

14.3 ASSESSMENT OF THE WATER POLLUTION POTENTIAL OF THE SULFATE PROCESS

14.3.1 Industry Profile and Analytical Results

Sulfate Process Industry

The industrial profile for this subcategory is given in Table 14-18 and existing regulations in Table 14-2.

The priority pollutants found at significant levels in the raw waste during sampling at Titanium Dioxide - Sulfate Process plants were as follows:

Pollutant	Maximum Concentration Observed (ug/l) Screening	Verification (2 Plants)
Cadmium	338	11.7
Chromium	123,600	30,600
Copper	1475	1,000
Lead	3729	5,193
Nickel	6370	1,295
Zinc	3840	16,610
Phenol	20	No Sample Taken
Silver	64	<15
Antimony	20	1,400
Arsenic	11	340
Thallium	19	41

A summary of daily and unit product raw waste loads for all plants sampled can be found in Table 14-19. Individual plant raw waste loads per unit product found in sampling can be found in Table 14-20.

Based on the total annual production of this subcategory and the average waste load generated per unit product, the estimated total priority pollutant raw waste loads generated each year for this subcategory are as follows:

TAB. - SUBCATEGORY PROFILE DATA SUMMARY

SUB(	TITANIUM DIOXIDE SULFATE PROCESS
Tot:tegory capacity rate	401,000 kkg/year
Tot:tegory production rate	259,000 kkg/year
Num)lants in this subcategory	5
308. file for	5
tal capacity of	320,000 kkg/year
tal production of	246,000 kkg/year
nting capacity	80 percent
nting production	95 percent
roduction range:	
Minimum	31,000 kkg/year
Maximum	74,500 kkg/year
production	49,000 kkg/year
production	43,000 kkg/year
capacity utilization	76 percent
ge range:	
Minimum	23 years
Maximum	54 years
ter flow range:	
Minimum	35,000 cubic meters/day
Maximum	125,000 cubic meters/day
per unit product:	
Minimum	300 cubic meters/kkg
Maximum	780 cubic meters/kkg

Sou:data are Stanford Research Institute, Directory of Chemical Pro(U.S.A., 1977, U.S. Department of Commerce, Current Industrial Repecember 1977; Energy and Environmental Analysis, Inc.; Draft Repreliminary Economic Assessment of Effluent Limitations in the Inochemical Industry."

TABLE 14-19 . SUMMARY OF RAW WASTE LOADINGS FOUND IN SCREENING AND VERIFICATION SAMPLING

SUBCATEGORY TITANIUM DIOXIDE - SULFATE PROCESS

Pollutant	Loadings						
	kg/day			kg/kkg			No. of Plants Averaged
	Minimum	Average	Maximum	Minimum	Average	Maximum	
Priority							
Antimony, Sb	7.66	18.0	28.3	0.08	0.21	0.32	2
Arsenic, As		1.31			0.014		1
Cadmium, Cd	0.091	2.40	6.85	0.0009	0.027	0.078	3
Chromium, Cr	132	200	327	1.36	2.11	3.37	3
Copper, Cu	8.30	11.6	15.1	0.094	0.12	0.16	3
Lead, Pb	3.28	8.56	12.4	0.037	0.089	0.13	3
Nickel, Ni	8.30	11.5	14.7	0.086	0.12	0.15	2
Thallium, Tl		0.76			0.0078		1
Zinc, Zn	53.4	55.3	57.1	0.55	0.57	0.59	2
Organics							
Phenol	0.20				0.002		
Conventional							
TSS		20478			211		
Iron, Fe		58452			602		

TABLE. PRIORITY POLLUTANT RAW WASTE LOADS (in kg/kkg of Product)

SUBCA	TITANIUM DIOXIDE - SULFATE PROCESS		
POLLU		PLANT	
	#559	#559	#555
Cadmi	0.0009	0.003	0.078
Chromr	3.37	1.36	1.61
Coppe	0.118	0.155	0.094
Arsen	0.0135		
Lead,	0.103	0.128	0.037
Nicke	0.151	0.086	
Zinc,	0.55	0.589	
Antimo	0.08		0.322
Pheno.		0.002	
Thalli	0.0078		

Pollutant	Waste Load (kg/year)
Cadmium	7000
Chromium	548000
Copper	31000
Lead	23000
Nickel	31000
Zinc	150000
Antimony	54000

14.3.2 Process Waste Sources and Waste Treatment Data

Sulfate Process - General Description

Among the various titanium ores, ilmenite is available in abundance. Ilmenite is a low-grade titanium ore with a TiO_2 content varying from 45 to 60 percent. Ilmenite ore and slag from iron production generally comprise the raw materials used for the preparation of titanium dioxide by the sulfate process. Large amounts of water and sulfuric acid are used in this process, and the majority of the plants are co-located with sulfuric acid plants. Table 14-21 gives the analysis of various ilmenite ores. The preparation of TiO_2 by the sulfate process utilizes three important steps:

(1) Digestion: $FeO.TiO_2 + 2H_2SO_4 = FeSO_4 + TiO.SO_4 + 2H_2O$

(2) Precipitation: $TiO.SO_4 + 2H_2O = TiO_2.H_2O + H_2SO_4$

(3) Calcination: $TiO_2.H_2O = TiO_2 + H_2O$

The ore is dried, ground and then reacted with sulfuric acid. The reaction takes place at 160 degrees C and the reacted mixture consists of titanyl, ferrous, and ferric sulfates. The total iron in the reacted product is kept in the ferrous state by the addition of scrap iron. After the reduction, the product is dissolved in water and clarified with the aid of flocculating agents to remove insoluble impurities such as silicon, zirconium and unreacted ore. The iron is removed from the clear solution by cooling the solution to 10 degrees C when $FeSO_4.7H_2O$ crystallizes. The ferrous sulfate crystals, commercial copperas, are mechanically separated from the solution by filtration or centrifugation. The concentrated titanyl sulfate solution is diluted with water and heated to form titanium dioxide hydrate which precipitates out. The suspension is filtered and the filtrate, which is known as strong acid, is separated and either discharged or recycled. The $TiO_2.H_2O$ filter residue is slurried with water and conditioning agents are added to control particle

TABLE 14-21 . ANALYSIS OF ILMENITE ORES[1]

Chemical Constituent	UNITED STATES					CANADA		
	Virginia							
	Piney River	Roseland	New York	Florida	California	Ivry	Bourget	Allard
TiO_2	44.3	51.4	44.4	64.1	48.2	42.5	22.4	37.3
FeO	35.9	37.9	36.7	4.7	39.1	39.1	36.9	26.3
Fe_2O_3	13.8	1.6	4.4	25.6	10.4	20.7	31.2	30.0
SiO_2	2.0	4.6	3.2	0.3	1.4	0.88	1.0	
Al_2O_3	1.21	0.55	0.19	1.5	0.2	1.05	6.01	
P_2O_5	1.01	0.17	0.07	0.21			0.93	0.004
ZrO_2	0.55		0.006		0.05			
MgO	0.07	2.35	0.80	0.35	0.6	2.0	1.50	
MnO	0.52	0.70	0.35	1.35	0.1	0.04		0.10
CaO	0.15	0.59	1.0	0.13	0.1	0.1	0.55	
V_2O_5	0.16	0.07	0.24	0.13	0.05	0.36		0.39
Cr_2O_3	0.27		0.001	0.1	0.03	0.15		

[1] Constituents expressed as weight percent.

size, color, dispersibility and photochemical stability. The conditioning agents include potassium, zinc, antimony and calcium compounds, and phosphate salts. The solution is filtered and the filtrate is known as weak acid. Residual acid and iron originally present in the precipitate are removed with the water of hydration by calcination. The resulting TiO_2 pigment is sent to finishing operations, which vary acccording to the end product requirement and application. The wet finishing operations may include some, or all, of the following steps; repulping, milling, surface treatment with proprietary agents in solution, washing, and drying. The alternative dry finishing operations may include one or more milling steps followed by packaging. A simplified block diagram of the sulfate process is shown in Figure 14-9.

Water use and Waste Source Inventory

Water use - Water is used in the preparation of titanium dioxide by the sulfate process for noncontact cooling, air emission control and for process reactions. In the process, water is used to leach the soluble sulfate salts from the reaction mass and to convert the titanyl sulfate to titanium dioxide hydrate. Water is also used to wash the titanium dioxide hydrate precipitate free from residual acid and iron. Water is used for air emission control during the drying of ore, on digester units and for the cleaning of the kiln gases before they are vented to the atmosphere. In the digester unit, water seals are used to maintain a vacuum on the digester units. Large amounts of water are also used in the finishing operations. Table 14-22 is a summary of water usage in the titanium dioxide subcategory using the sulfate process.

Waste sources

A. Digester Sludge: After the digestion of the ore in sulfuric acid, the resulting sulfates are dissolved in water and the insoluble impurities are removed in a clarifier or filter. These include silica, alumina, sulfuric acid and unreacted iron. The quality of this waste varies and depends on the type and quality of ore used. Data on the quantity of this waste indicates that approximately 210 kkg/kkg is produced.

B. Copperas: The recovered ferrous sulfate is marketed or disposed of as a solid waste. The amount of copperas generated is about 950 kg/kkg of TiO_2. The copperas generally contains small amounts of adsorbed sulfuric acid.

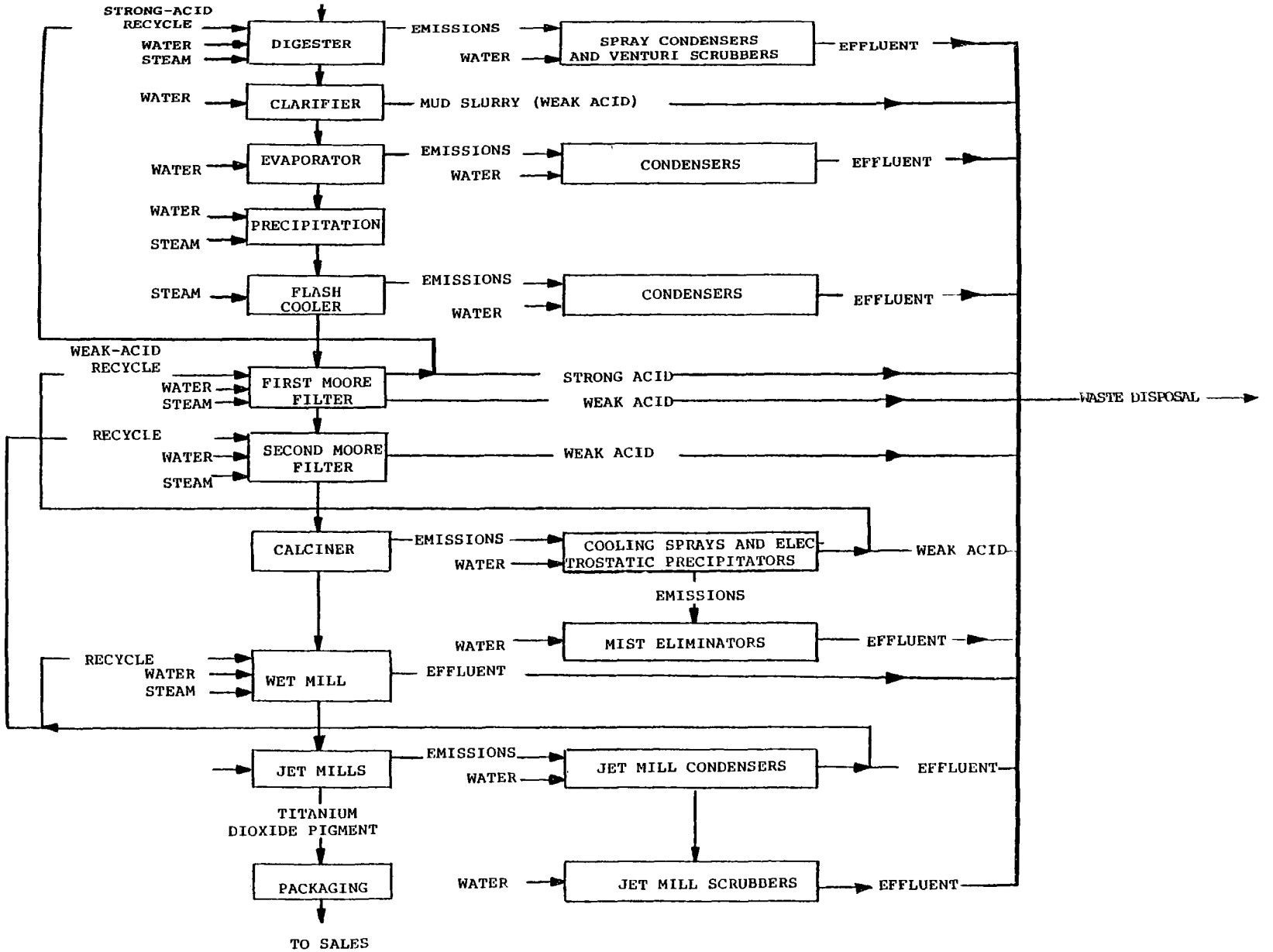

Figure 14-9. General process flow diagram for production of titanium dioxide by sulfate process.

TABLE 14-22. WATER USAGE IN TITANIUM DIOXIDE - SULFATE PROCESS SUBCATEGORY

Uses	Water Usage per Unit of Production m^3/kkg of TiO_2		
	Plant #555	Plant #694	Plant #696
Non-contact cooling	47.8	408	149
Direct process contact	390	588	297
Indirect process contact (pumps, seals, leaks, spills, etc.)	6	1.6	4
Maintenance, equipment cleaning and work area washdown	3	1.8	4
Air pollution control	258	78	81
Non-contact ancillary uses (boilers, utilities, etc.)	36	33	NA

C. Strong Acid Waste: When water is added to titanyl sulfate solution after the removal of copperas, sulfuric acid and the hydrate of titanium dioxide are formed. The acid contained in solution is removed by filtration and the filtrate is known as strong acid solution. The concentration of sulfuric acid varies from 15-30 percent as H_2SO_4. In addition to sulfuric acid, the waste stream contains ferrous sulfate, titania, antimony and other heavy metal salts. A part of the acid is returned to the process and the rest sent to the treatment facility.

D. Weak Acid Waste Stream: The waste generated from washing the titanium dioxide hydrate precipitate is known as weak acid. The concentration of sulfuric acid in this waste varies from two to four percent as H_2SO_4 and contains various impurities, including iron sulfate, titania, antimony and other heavy metal salts. It also includes, in some cases, the conditioning agents added to the precipitate prior to washing, to control and improve the quality of the final product. The weak acid may also include the kiln exhaust gas scrubber waste.

E. Scrubber Wastes: Scrubber waste water results from the scrubbing of vapors emitted during the drying of the ore, during digestion, and during kiln drying. The amount of waste water generated depends on the amount of water used and type of emission controls practiced. The scrubber water contains titanium dioxide particulates, acid mist, sulfur trioxide and sulfur dioxide. Of all the waste produced from titanium dioxide-sulfate process manufacture subcategory, the scrubber waste water constitutes the major portion.

F. Wet Milling Waste: These wastes are generated during wet finishing of the titanium dioxide pigment. Wet milling is used to produce pigment particles of the desired size and surface character and requires steam and water for repulping the pigment. Caustic soda is also used to remove any residual acidity from the titanium dioxide pigment during the finishing operation. The waste water from wet finishing operations, therefore, contains titania, sodium sulfate and other agents added to improve or achieve desired properties in the final product.

Control and Treatment Practices

BPT: The recommended technology for BPT is neutralization of the TiO_2 sulfate process waste waters with lime or caustic soda and removal of suspended solids in settling ponds or clarifier-thickener combinations.

Plant #559 was sampled in the screening and verification

phase. At this plant the strong acid is sent to a lined holding pond for equalization. The effluent from the pond is neutralized with ground calcium carbonate in a reactor; just a sufficient amount is added to raise the pH to a level such that calcium sulfate, but not ferrous hydroxide, is precipitated. The CO_2 formed during the reaction is vented to the atmosphere and the calcium sulfate slurry goes to a clarifier. The underflow from the clarifier is filtered to produce pure gypsum crystals at a concentration of 70-80 percent.

The weak acid is sent to a settling pond, where it is combined with a small quantity of other wastes. The effluent from the weak acid pond is mixed with the calcium sulfate clarifier overflow and neutralized with ground calcium carbonate in a three-stage reactor. Pebble and slaked lime are also added to raise the pH and precipitate more calcium sulfate. Air is also introduced to convert the ferrous iron to ferric. The effluent from the reactor goes to another clarifier, and the clarifier underflow is filtered to concentrate the solids to 70 percent. The overflow from the second clarifier is mixed with the other process waste waters. These include the scrubber, finishing and cooling waste waters. The combined water is neutralized with slaked lime before it is sent to a final settling pond, the effluent from which is discharged. Figure 14-10 gives the flow diagram of the treatment process and shows the sampling locations for both screening and verification. Table 14-23 gives the flow data for the waste streams and significant pollutant emissions.

At Plant #555, all the process effluent goes to a settling basin, the effluent from which is discharged. The solids are dredged and accumulated on the plant property. Future plans are to dispose of the solids in an approved landfill.

At Plant #694, the clarification sludge which contains the unreacted ore is sent to waste disposal. The weak acid effluent from the plant is neutralized with slaked lime and the grit is settled out for landfill disposal. After the separation of grit, the aqueous stream is discharged to a municipal treatment system. The other wastes, together with runoff from the plant site, are collected and sent to a lagoon for solids removal, and the overflow discharges to a river.

At Plant #696, the raw wastes are sent to thickeners to remove the suspended solids and the overflow is discharged. Depending on the titanium content, the underflow from the thickeners is either recycled or disposed of in a landfill.

At Plant #605, the process raw waste streams are combined and sent to a reactor for neutralization with a water slurry of finely ground calcium carbonate. The effluent from the reactor is hydrocycloned into three fractions. The first fraction, which is

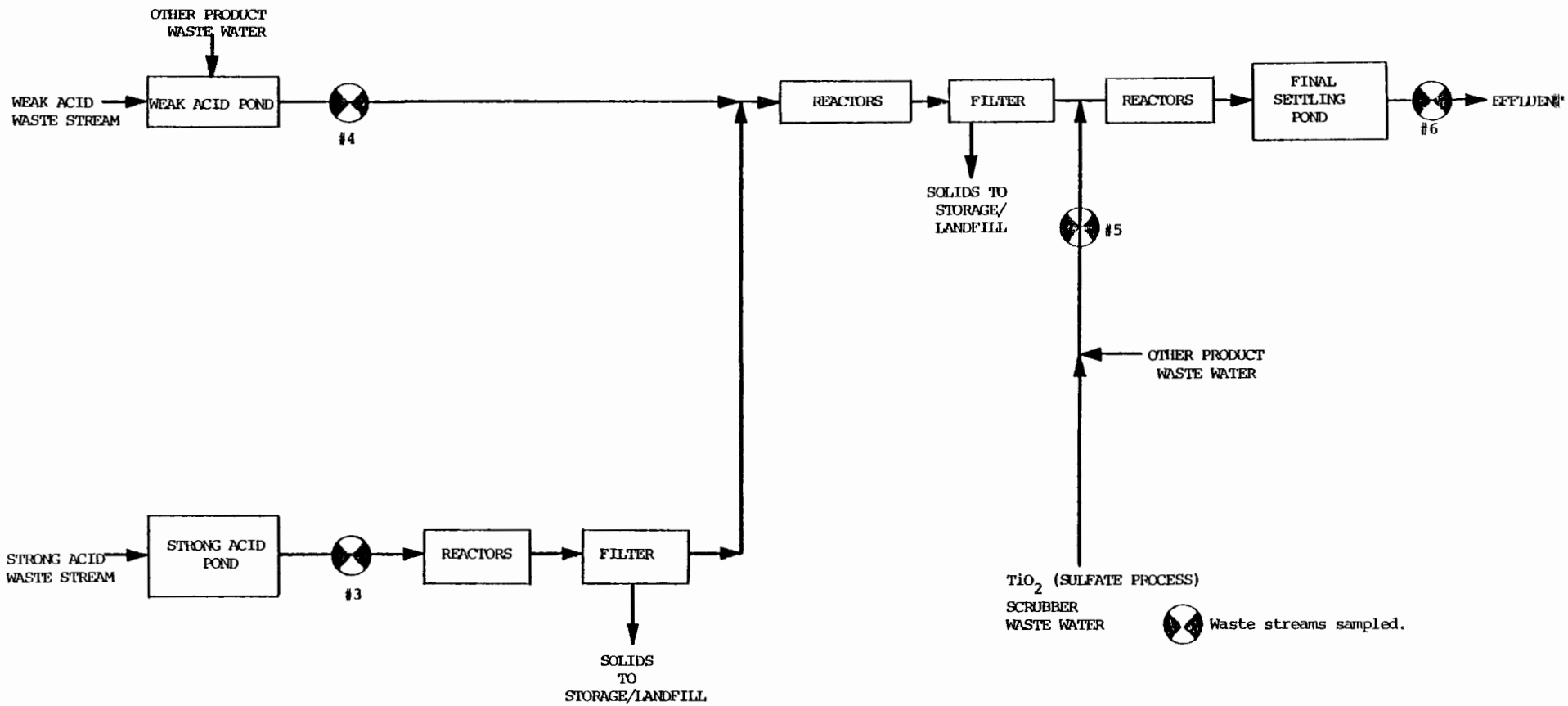

Figure 14-10. General flow diagram at Plant #559 showing the sampling points. Titanium Dioxide (Sulfate Process)

TABLE 14-23. FLOW AND POLLUTANT CONCENTRATION DATA OF THE WASTE STREAMS SAMPLED FOR PLANT #559 PRODUCING TITANIUM DIOXIDE (SULFATE PROCESS)

Stream No.	Sampled Stream Description	Unit Flow m^3/kkg of TiO_2	SS Load kg/kkg of TiO_2	Iron Load kg/kkg of TiO_2	Chromium Load kg/kkg of TiO_2
4	Weak Acid Pond Overflow	107	1.75 (1)	305 (1)	2.81 (1)
3	Strong Acid Pond Overflow	9.7	1.94	87.6	0.18
5	Scrubber and other Product Waste Water	583	183 (1)	83.6 (1)	0.062 (1)
6	Final Treatment Effluent	700 (1),(2)	16.1	3.08	0.017

(1) = The pollutant load was calculated by multiplying the flow contributed by the sulfate process stream times the concentration of pollutant. Pollutant Load = (total stream flow)x(fraction contributed by sulfate process waste) x stream pollutant concentrated.

(2) = While calculating the unit flow the contributions to the treatment process from precipitation, the water in the treatment chemicals, losses from evaporation and from solids leaving the process have not been considered.

the coarse gypsum slurry, is separated from the reactor effluent at a concentration of 85-90 percent, and placed in a self-draining dewatering system. The "dry" solids are finally trucked to a landfill. The second fraction separated in the hydrocyclone is a fine gypsum slurry which is recycled to the neutralization reactor. The residual gel slurry forms the third fraction, and this is sent to a thickener after CO_2 degassing. A flocculating agent is added to the flow to the thickener to promote solids separation and thickening. The underflow from the thickener is centrifuged and the solids landfilled. The filtrate from the centrifuge is recycled to the thickener, and the thickener overflow is discharged.

Evaluation of Industry Production and Waste Flow Data

The volume and characteristics of waste water streams from different sulfate process titanium dioxide plants do not differ greatly. Some variations, however, are noted as a result of differences in ore qualities, in location and in process details. The majority of the dissolved pollutants in waste water from this segment of the TiO_2 industry consist of acidity and iron. Segregation of the waste water is important for control and treatment practices and aids in developing economically feasible treatment systems. Generally, weak and strong acid stream are segregated from each other as well as from the less contaminated waste waters which include contact cooling, scrubbing and some finishing operation wastes. The unit flows for the segregated raw waste streams at different facilities are shown in Table 14-24. Waste characteristics for Plant #555 are given in Table 14-25.

Process Modifications and Technology Transfer Options

Specific process modifications cannot be made at present. However, several areas for further research suggest themselves. They are:

1. One of the waterborne wastes, the strong sulfuric acid produced from the TiO_2 sulfate process, has a sulfuric acid concentration that varies from 15-30 percent as H_2SO_4. Currently, only a small portion of it is recycled. Research is needed to find cost-effective ways to concentrate the acid to 90 percent and to eliminate the impurities (especially iron) so that it can be reused in the digester. This will eliminate much of the alkali requirements for neutralization and relieve disposal problems associated with solid waste gypsum.

2. Economical methods need to be developed for the recovery of iron oxide, aluminum and vanadium from the waste to the extent

TABLE 14-24. EFFLUENT FLOW AT PLANTS #555, #605 AND #559 PRODUCING TITANIUM DIOXIDE (SULFATE PROCESS)

Waste Stream	Flow in m^3/metric ton of TiO_2 at plant		
	Plant #555	Plant #605	Plant #559
Strong Acid	8.49	7.8	7.4
Weak Acid	78.2	93	85
Other process waste water	362	597	NA

NA = Not Available

TABLE 14- 25. RAW WASTE CHARACTERISTICS (INDUSTRY DATA) FOR PLANT #555 (PRODUCTION OF TiO_2 BY SULFATE PROCESS)

Waste Source	Unit Flow m^3/kkg of TiO_2	pH*	Pollutant Waste Loads, kg/kkg of TiO_2				
			Acidity (as H_2SO_4)	NH_3 (as N)	Fe	TSS	TDS
Digestion	115	3.0	20.8	-	0.042	9.3	35.7
Clarification	3.58	2.5	26.7	-	8.42	175	40.8
Evaporation	113	4.0	18.7	-	1.14	3.2	20.2
Cooling	20	6.1	2.49	-	0.099	0.46	3.09
Strong Acid from first Moore Filtration	8.49	<0.5	2.360	-	139	0.959	2.815
Weak Acid from first Moore Filtration	12.2	2.0	88.3	-	3.8	0.23	98.8
Weak Acid from second Moore Filtration	10.4	1.7	148	-	0.29	0.13	151
Weak Acid from first stage Calcination	12.0	2.0	20.8	-	0.22	2.0	7.50
Weak Acid from second stage Calcination	40.0	2.2	19.2	-	0.64	4.92	33.1
Calcination Mist Eliminators	38.7	3.0	7.50	-	0.02	0.21	27.9
Wet Milling Washing and Drying	11.1	8.0	-	8.6	0.01	2.13	11.0
Jet-Mill Condenser	27.0	6.5	-	-	0.01	1.1	2.7
Jet Mill Scrubbers	18.0	7.4	-	-	0.13	1.7	3.58
Boiler and Water Plants	16.6	9.0	-	-	-.66	5.25	8.92

*Value in pH units.

that markets are available for these materials.

3. If markets could be developed for the sale of ferrous sulfate (copperas), solid waste disposal problems would be reduced. Currently, a portion is sold and the rest disposed of as a solid waste.

Best Management Practices

1. Storm water runoff from the plant site and surrounding areas can be collected and sent to the treatment facility.

Model Plant and BPT Level Treatment System Specifications

Model plants were selected to provide the basis for cost estimates. The rationale used for their selection is given below.

Production - Five plants produce titanium dioxide by the sulfate process at a total production rate of 246,000 metric tons per year. Production ranges from a minimum of 31,000 kkg/yr to a maximum of 74,500 kkg/yr with a mean of 49,000 kkg/yr and a median of 43,000 kkg/yr. For treatment cost estimates, three production levels were selected. These were 31,800 kkg/yr, 47,700 kkg/yr and 74,500 kkg/yr.

Waste water flows - Waste water is typically segregated into three main streams; strong acid,, weak acid and other waste water. The unit flow data for strong acid ranges from 7.5 to 8.5 m3/kkg of Ti02. For the model plants a unit flow of 7.5 m3/kkg was used. Unit flows for the weak acid stream range from 79 to 92 m3/kkg. For the model plants, a unit flow rate of 88 m3/kkg of Ti02 was used. The third segregated stream includes contact cooling water (used for barometric condensors, etc.), scrubber waste and finishing operation waste water. The unit flow for this stream varies from plant to plant and depends largely on the type and quality of the Ti02 pigment end product desired. For model plants, a unit flow of 304 m3/kkg of Ti02 was used.

Pollutant load - As stated before, the principal pollutants occur in the strong and weak acid streams and include high acidity (sulfuric acid), suspended solids, iron and other heavy metal sulfates. The other waste waters contain titanium dioxide and small amounts of other heavy metals as suspended solids. Iron concentrations vary depending on the grade of ilmenite ore used. Data available for Plant #559 shows iron emissions ranging from 135 to 300 kg/kkg of Ti02 in the waste streams. For the model plants, a total iron loading of 300 kg/kkg was used with the assumption that two-thirds was suspended ferric hydroxide and

one-third (100 kg/kkg of TiO_2) was soluble ferrous iron. The unit sulfate and suspended solid loadings for the different waste water streams for the model plant were:

Stream	Sulfate Loading kg/kkg of TiO_2	TSS Loading kg/kkg of TiO_2
Weak Acid	2,300	300
Strong Acid	1,800	3
Other Waste Water	Negligible	25

Chemicals Used: In the model BPT system, powdered limestone is used for first stage neutralization of mixed strong and weak acids, at the unit rate of 3,000 kg/kkg of TiO_2. Pebble lime (CaO) is used for second stage neutralization of the mixed acid streams and for final neutralization of the total combined flow, including the other miscellaneous wastes. The unit application of CaO for all purposes is .235 kg/kkg of TiO_2. In Level 2 (BAT), soda ash is added to 45% of the "other waste" flow at an approximate dosage of 130 ug/l, to permit partial recycle for miscellaneous purposes.

Solids Produced: Although some existing plants have attempted to produce two grades of saleable gypsum from the strong and weak acid streams, at present there is not a sufficient market for gypsum to justify byproduct gypsum recovery in the model plants. The solids produced from the treatment facility consist of gypsum, iron oxide, and the original suspended solids introduced in the influent. The total solids produced in the model plant are assumed to be 5,500 kg/kkg of TiO_2.

Additional solids generated in the soda ash treatment of "other wastes" at Level 2 are only a few hundred pounds per day, and are considered a negligible increase in total solids production. These additional solids are periodically transferred from the recycle polishing ponds to the main treatment system just ahead of the aeration step. In this way, the additional quantity of priority metals will be subjected to the ferric iron flocculation, lime treatment and settling sequence in the BPT system.

14.4 TECHNOLOGY BASED POLLUTION ABATEMENT

14.4.1 Advanced Level Treatment Applications

Selection of Technology to be Applied

Sulfate process - BPT - Two levels of treatment are shown for the sulfate process model, utilizing calcium carbonate neutralization for the blended strong and weak acid streams. The priority pollutants are precipitated and together along with gypsum are separated in first-stage thickeners. Aeration then oxidizes any ferrous iron present and removes CO_2 before mixing with miscellaneous plant wastes containing minor amounts of heavy metal priority pollutants. The combined stream is then given lime treatment to pH 9 and settled in polishing lagoons before discharge. This three-step system is patterned after existing systems which separate the acid streams from miscellaneous wastes in order to make possible the recovery of pure and impure gypsum from the relatively consistent acid streams. Alkaline precipitation of heavy metals, and significant removal of arsenic occur during the last two stages of lime neutralization, and settling of precipitated priority pollutants occurs in the final polishing lagoons. Because waste flow rates are unusually high in the sulfate process, long-term lagoon settling is more cost effective than dual media filtration. The mechanical aeration step used for oxidizing ferrous iron may contribute an important mechanism for the simultaneous removal of other heavy metals present very similar to the ferrite coprecipitation method described in the Treatment Technology Assessment section.

Although the Model Plant does not include equipment for gypsum recovery, it is based on separation of waste streams, making pure or impure gypsum recovery possible by intercepting thickener underflow(s). Recovery of gypsum as a saleable by-product is not possible since no market exists.

Level 2 - Level 2 for the sulfate process employs the described BPT treatment for strong acid, weak acid and 55% of the "other wastes". The remaining other wastes receive soda ash treatment and settling, to permit recycling a nonscaling effluent for scrubbers and miscellaneous uses. Heavy metal pollutants in the separated recycle stream are settled as carbonates and periodically removed to a secure landfill.

Equipment functions - Treatment of waste water from the sulfate process involves the mechanized handling of large quantities of chemicals and reaction products, primarily gypsum.

The BPT model includes rail car deliveries of ground limestone and lime, bucket elevators, storage bins, multiple

feeders, mechanical feeders, mechanical aerators and two-stage thickening for removal of pure and iron-bearing gypsum from the treated acid waste streams. Calcium saturated thickener overflow and miscellaneous other waters are subjected to alkaline precipitation and settled in a one-day polishing pond. In Level 2, to reduce the mass discharge of heavy metals, only 55% of the BPT "other waste" flow joins the treated acid waste stream, for BPT treatment as described above. However, the remaining 45% of "other wastes" is given separate treatment with soda ash settled in a lagoon, for recycle to miscellaneous scrubber and noncontact cooling purposes. Treatment of the strong and weak acid streams, including oxidation and settling of ferrous iron, remains the same as in the BPT model.

Chemicals and handling - Sulfate Process - First stage neutralization employs ground limestone, while lime is used for second stage and final alkaline precipitation. Oxygen is supplied from atmospheric ai, and polymer is added to assist in the second stage settling of iron hydroxide. Aside from the bulk handling of large amounts of these common chemicals, there are no special hazards involved in their use.

Separation and removal of solids - Large quantities of thickener underflow are pumped to spreading areas for consolidation of the solids, which are later pushed into 18 foot high piles on land provided for 10 years of operation. Solids from occasional draining of the polishing lagoon and the Level 2 recycling lagoon are returned to the aeration step of the waste acid streams, after which they will be settled out in the second stage thickener, being handled as part of the thickener underflow. Although no dewatering equipment is provided, the first and second stage thickeners can be sources of pure and impure gypsum for future by-product recovery.

Monitoring requirements - The same monitoring requirements apply as for the chloride process, with the addition of the internal process needed to monitor the scaling tendency and total dissolved solids in the recycled "other wastes", in order to keep the recycle stream at a suitable level of mineral content.

Figures 14-11 and 14-12 show the model treatment systems chosen for this subcategory.

14.4.2 Base Level Performance Characteristics for BPT Pollutant Removal

The production of titanium dioxide by the sulfate process generates extremely large waste loads of sulfuric acid and ferrous sulfate, as well as considerable quantities of suspended solids. Effective control and treatment of these wastes--comprised of segregation of the most highly contaminated

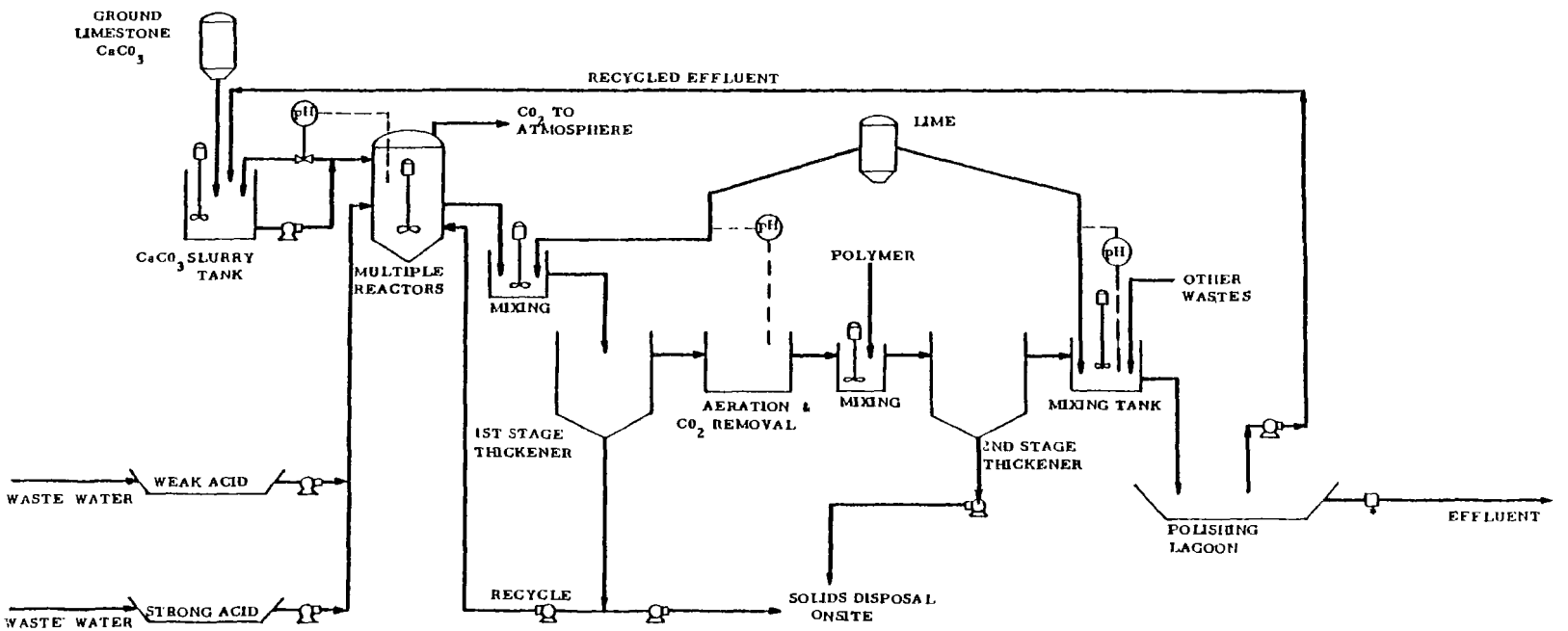

*Includes flow monitoring, pH monitoring and sampler

Figure 14-11. Waste water treatment Level 1 for titanium dioxide - sulfate process.

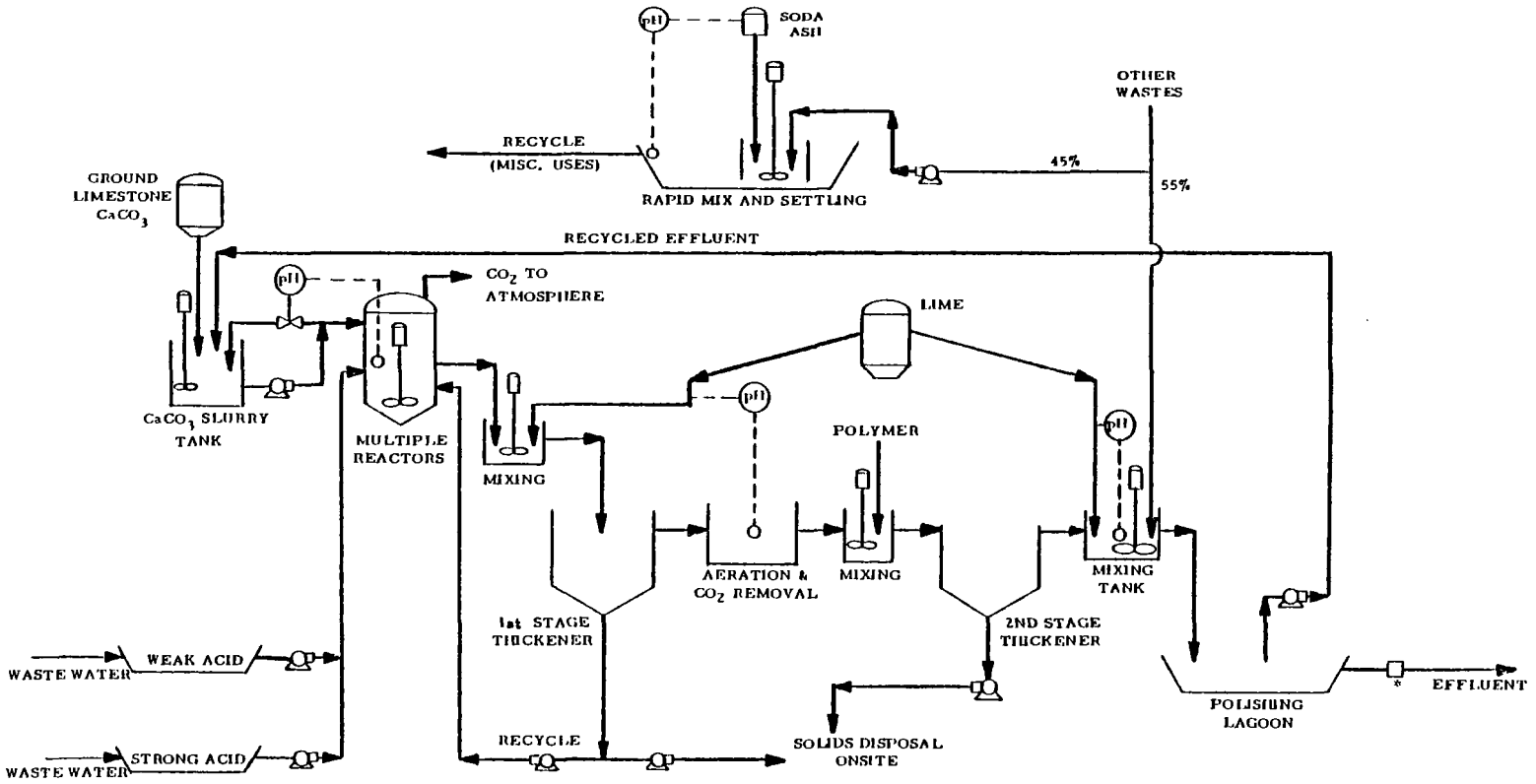

*Includes flow monitoring, pH monitoring and sampler

Figure 14-12. Waste water treatment Level 2 for titanium dioxide - sulfate process.

effluents, neutralization, aeration to oxidize ferrous iron, and removal of the resulting precipitates--is presently practiced at only one of the five existing plants and is being implemented at another.

Waste water control treatment practices at three sulfate-process titanium dioxide plants are summarized in Table 14-26. Of the two direct discharging facilities, only Plant #559 currently provides effective treatment for all process waste streams.

At Plant #605, implementation of treatment equivalent to that provided at Plant #559 is in progress, but presently only neutralization and solids removal is practiced. Consequently, effluent loadings of iron at that facility are very high.

Effluent quality monitoring data from plant #559 are summarized in Table 14-27. Verification sampling results for this plant are presented in Table 14-28.

Raw waste priority pollutants found in significant concentrations at Plant #559 which might require regulation, include arsenic, cadmium, chromium, copper, nickel, thallium, and zinc.

BPT technology for sulfate process titanium dioxide wastes has been identified as multiple stage neutralization of acid wastes with limestone and lime, aeration for removal of ferrous iron, and settling. On site disposal of gypsum sludges generated in treatment is included.

Chloride-Ilmenite process

Two plants currently use the chloride ilmenite process for manufacture of titanium dioxide. Plant #550, sampled in screening, disposes of its most contaminated acid waste by deep-well injection and treats the remaining wastes by neutralization and settling. Results of analyses indicated that treatment influent and effluent waste loads resembled those observed at other chloride process plants, while the acidic ferric chloride waste contained waste loads similar to those encountered at sulfate process plants. Unfortunately, during the sampling program, the ore being used at the plant was closer to the richer rutile ore and could not be considered a true ilmenite. Conclusions could therefore not be drawn on the basis of this sampling as to the character of chloride ilmenite waste loads. Company personnel indicated that such variation in ore quality is likely for some time in the future.

It can be suggested that until further studies are conducted and decisions are made as to the continued use of deep well

TABLE 14-26. SUMMARY OF EXISTING CONTROL AND TREATMENT TECHNOLOGY FOR SULFATE-PROCESS TITANIUM DIOXIDE PLANTS

Plant	Process Wastestreams	Control and Treatment Technology	Discharge Status
#559	Strong and Weak Acids; Contact Cooling: Noncontact Cooling	Waste acids are neutralized, settled (in stages) and aerated for iron removal. Cooling water is mixed with neutralized acid for final neutralization and settling before discharge.	Direct
#605	Strong and Weak Acids; Contact Cooling	Currently, waste acids are adjusted to pH 4 and settled, but a system using aeration and further neutralization with settling is under construction. Contact cooling water is neutralized for discharge.	Direct
#694	Weak Acid	Weak acid waste water is adjusted to a pH of greater than and discharged to sanitary sewer.	POTW

TABLE 14-27 SUMMARY OF DAILY EFFLUENT MONITORING DATA FOR COMBINED WASTE WATER TREATMENT DISCHARGE AT SULFATE-PROCESS TITANIUM DIOXIDE PLANT #559

Parameter	Concentration (mg/l) Min	Avg	Max	St. Dev.	Waste Load (kg/kkg) (lbs/1000 lbs) Min	Avg	Max
Chromium, Cr	0.01	0.021	0.119	0.027	0.00049	0.0014	0.0045
Cadmium, Cd	0.001	0.009	0.02	0.004	0.00004	0.00062	0.0012
Iron,Fe (Total)	0.4	3.25	19.1	4.6	0.29	2.14	12.99
Iron,Fe (Dissolved)	0.08	0.279	4.98	0.562	0.04	0.194	4.0
Lead,Pb	0.002	0.017	0.05	0.013	0.00008	0.0012	0.003
Nickel,Ni	0.01	0.029	0.08	0.02	0.00057	0.0019	0.0046
Zinc,Zn	0.01	0.027	0.3	0.057	0.00049	0.0019	0.022
Total Suspended Solids, TSS		35.8		61.3		23.9	

TABLE 14-28. VERIFICATION RESULTS TITANIUM DIOXIDE PLANT #559

Pollutant	Raw Waste kg/kkg Avg.	Raw Waste kg/kkg Max.	Treated Effluent mg/l Avg.	Treated Effluent mg/l Max.	Treated Effluent kg/kkg Avg.
Total Suspended Solids (TSS)	310	330	23	38	19.5
Total Iron, Fe	670	770	4.4	7.9	3.7
Antimony, Sb	-	-	<0.015	<0.015	<0.01
Arsenic, As	0.015	0.020	<0.010	<0.010	<0.008
Cadmium , Cd	0.008	0.001	0.0001	0.0002	0.0001
Chromium, Cr	5.0	5.6	0.025	0.030	0.02
Copper, Cu	0.13	0.14	<0.005	<0.005	<0.004
Lead, Pb	0.16	0.17	0.002	0.003	0.002
NIckel, Ni	0.19	0.22	<0.005	<0.005	0.004
Thallium, Tl	0.004	0.008	<0.005	<0.005	0.002
Zinc, Zn	0.72	0.76	0.061	0.065	0.05
Flow (m^3/kkg)	616*				

*Includes cooling water and a small part of chloride process waste.

injection for disposal of this acidic wastes, discharge limitations be either reserved or set similar to those limitations for the sulfate process.

Base Level Performance Characteristics for BPT and Priority Pollutant Removal

Table 14-29 presents effluent quality achievable through the implementation of BPT or Level 1 treatment technology for titanium dioxide manufacture by the sulfate process.

Pretreatment Applications

Presently one sulfate process titanium dioxide plant discharges a portion of its waste water to a POTW. However, due to the large volumes of waste water, the highly acidic nature of the raw wastes, and the great amounts of solids generated in neutralizing the wastes, it is unlikely that there will be further POTW discharge of wastes from titanium dioxide sulfate process plants. If they need to be regulated, BPT standards should be applied.

Responses to Remand Issues

Effluent limitations originally promulgated as BPCTCA for sulfate process titanium dioxide plants were remanded on the grounds that an inadequate technical basis was provided for the regulations, and that the technology was neither explicitly identified nor in use within the industry. Treatment technologies have now been clearly identified and demonstrated. Achievable levels of pollution control have primarily been derived from results presently achieved in the industry.

Treatment cost estimates and energy requirements were also challenged. Cost estimates for the selected technology have been developed, including the costs of solid waste disposal and all energy required for waste treatment.

14.4.3 Estimated Performance for Advanced Level System

Table 14-30 presents estimated achievable effluent quality through implementation of the recommended advanced technology of recycle.

TABLE 14-29 CONTROL PARAMETER LIMITATIONS
SUBCATEGORY: Titanium Dioxide - Sulfate Process
Level of Treatment: 1
Waste Water Flow: 700 m3/kkg

Pollutant	Subcategory Performance (mg/l)	(1) VFR	Quality Limit (mg/l)		Emission Limit (kg/kkg)	
			30 day Aver	24 hr Max	30 day Aver	24 hr Max
BPT Pollutants:						
Total Suspended Solids, TSS	86	2.0	37.5	75	26	52
Iron, Fe	4.6	3.0	5.0	15	3.5	10.5
Proposed Priority Pollutants						
Arsenic, As	0.01(2)	2.0	0.5	1.0	0.35	0.7
Cadmium, Cd	0.01	2.0	0.1	0.2	0.07	0.14
Chromium, Cr	0.04	2.0	0.1	0.2	0.07	0.14
Copper, Cu	0.01(2)	2.0	0.5	1.0	0.35	0.7
Lead, Pb	0.03	2.0	0.5	1.0	0.35	0.7
Nickel, Ni	0.05	2.0	0.5	1.0	0.35	0.7
Thallium, Tl	<0.005(2)	2.0	0.2	0.4	0.14	0.28
Zinc, Zn	0.06	2.0	0.5	1.0	0.35	0.7

(1) - VFR: ratio of the 24 hour variability factor to the 30 day variability factor.

(2) Verification sampling

TABLE 14-30 CONTROL PARAMETER LIMITATIONS
SUBCATEGORY: Titanium Dioxide - Sulfate Process
Level of Treatment: 2
Waste Water Flow: 430 m3/kkg

Pollutant	Treatability (mg/l)	(1) VFR	Quality Limit (mg/l)		Emission Limit (kg/kkg)	
			30 day Aver	24 hr Max	30 day Aver	24 hr Max
BPT Pollutants:						
Total Suspended Solids, TSS	37.5	2.0	37.5	75	16	32
Iron, Fe	5.0	3.0	5.0	15	2.2	6.4
Proposed Priority Pollutants						
Arsenic, As	0.5	2.0	0.5	1.0	0.22	0.43
Cadmium, Cd	0.1	2.0	0.1	0.2	0.043	0.086
Chromium, Cr	0.1	2.0	0.1	0.2	0.043	0.086
Copper, Cu	0.5	2.0	0.5	1.0	0.22	0.43
Lead, Pb	0.5	2.0	0.5	1.0	0.22	0.43
Nickel, Ni	0.5	2.0	0.5	1.0	0.22	0.43
Thallium, Tl	0.2	2.0	0.2	0.4	0.086	0.17
Zinc, Zn	0.5	2.0	0.5	1.0	0.22	0.43

(1) - VFR: ratio of the 24 hour variability factor to the 30 day variability factor.

14.4.4 Cost Estimates - Sulfate Process

Model Plant Costs

The estimated costs for three models having different production levels are given in Tables 14-31, 14-32, and 14-33. Annual treatment costs as a function of production are shown graphically in Figure 14-13. Similarly, treatment cost per metric ton of product is given in Figure 14-14.

Table 14-34 presents a summary of the unit cost distribution between amortization and operation and maintenance cost components at different productions and at the BPT and BAT (2nd) level of treatment.

For existing sources at the first level of treatment, the disposal of sludge is on-site, hence land requirements are fairly large. Amortization, chemicals, labor, residual waste disposal costs have significant impact on the annual costs. The treatment Level 2 amortization, chemicals and labor constitute a major portion of the additional costs.

TABLE 14-31. MODEL PLANT TREATMENT COSTS

Subcategory TITANIUM DIOXIDE Sulfate Type of Regulation BAT

Production 31,800 metric tons per year (35,059 tons per year)
90 metric tons per day (100 tons per day)

Waste water flow 61600 cubic meters per day.

	LEVEL OF TREATMENT*	
	FIRST	SECOND
A. INVESTMENT COST		
Construction	$701,200	$117,500
Equipment in place, including piping, fittings, electrical work and controls.....	2,328,400	233,000
Monitoring equipment in place.....	9,000	
Engineering design and inspection.....	607,720	70,100
Incidentals, overhead, fees, contingencies...	607,720	70,100
Land.....	1,272,000	12,000
TOTAL INVESTMENT COST	$5,526,040	$502,700
B. OPERATION AND MAINTENANCE COST		
Labor and supervision.	$504,000	$56,000
Energy.....	96,000	9,000
Chemicals.....	1,589,000	176,000
Maintenance.....	425,404	49,070
Taxes and insurance...	165,781	15,081
Residual waste disposal.....	210,000	
Monitoring, analysis and reporting.....	15,000	7,500
TOTAL OPERATION AND MAINTENANCE COST	$3,005,185	$312,651
C. AMORTIZATION OF INVESTMENT COST	$692,132	$79,836
TOTAL ANNUAL COST	$3,697,317	$392,487

*First level represents the base cost of treatment system. Other levels represent the incremental cost above base cost.

TABLE 14-32. MODEL PLANT TREATMENT COSTS

Subcategory TITANIUM DIOXIDE Sulfate Type of Regulation BAT

Production 47,700 metric tons per year (52,589 tons per year)
136 metric tons per day (150 tons per day)
Waste water flow 92600 cubic meters per day.

	LEVEL OF TREATMENT*	
	FIRST	SECOND
A. INVESTMENT COST		
Construction	$958,700	$161,000
Equipment in place, including piping, fittings, electrical work and controls.....	2,980,200	278,000
Monitoring equipment in place.....	9,000	
Engineering design and inspection.....	789,580	87,800
Incidentals, overhead, fees, contingencies...	789,580	87,800
Land.....	1,920,000	18,000
TOTAL INVESTMENT COST	$7,447,060	$632,600
B. OPERATION AND MAINTENANCE COST		
Labor and supervision.	$672,000	$56,000
Energy.....	138,000	12,000
Chemicals.....	2,384,000	265,000
Maintenance.....	552,706	61,460
Taxes and insurance...	223,411	18,978
Residual waste disposal.....	315,000	
Monitoring, analysis and reporting.....	15,000	7,500
TOTAL OPERATION AND MAINTENANCE COST	$4,300,117	$420,938
C. AMORTIZATION OF INVESTMENT COST	$899,252	$99,995
TOTAL ANNUAL COST	$5,199,369	$520,933

*First level represents the base cost of treatment system.
Other levels represent the incremental cost above base cost.

TABLE 14-33. MODEL PLANT TREATMENT COSTS

Subcategory TITANIUM DIOXIDE Sulfate Type of Regulation BAT

Production 74,500 metric tons per year (82,136 tons per year)
212 metric tons per day (234 tons per day)
Waste water flow 144000 cubic meters per day.

	LEVEL OF TREATMENT*	
	FIRST	SECOND
A. INVESTMENT COST		
Construction	$1,293,500	$208,000
Equipment in place, including piping, fittings, electrical work and controls.....	3,914,500	322,000
Monitoring equipment in place.....	9,000	
Engineering design and inspection.....	1,043,400	106,000
Incidentals, overhead, fees, contingencies...	1,043,400	106,000
Land.....	2,940,000	24,000
TOTAL INVESTMENT COST	$10,243,800	$766,000
B. OPERATION AND MAINTENANCE COST		
Labor and supervision.	$672,000	$56,000
Energy.....	199,000	18,000
Chemicals.....	3,719,000	412,000
Maintenance.....	730,380	74,200
Taxes and insurance...	307,314	22,980
Residual waste disposal.....	420,000	
Monitoring, analysis and reporting.....	15,000	7,500
TOTAL OPERATION AND MAINTENANCE COST	$6,062,694	$590,680
C. AMORTIZATION OF INVESTMENT COST	$1,188,328	$120,723
TOTAL ANNUAL COST	$7,251,022	$711,403

*First level represents the base cost of treatment system. Other levels represent the incremental cost above base cost.

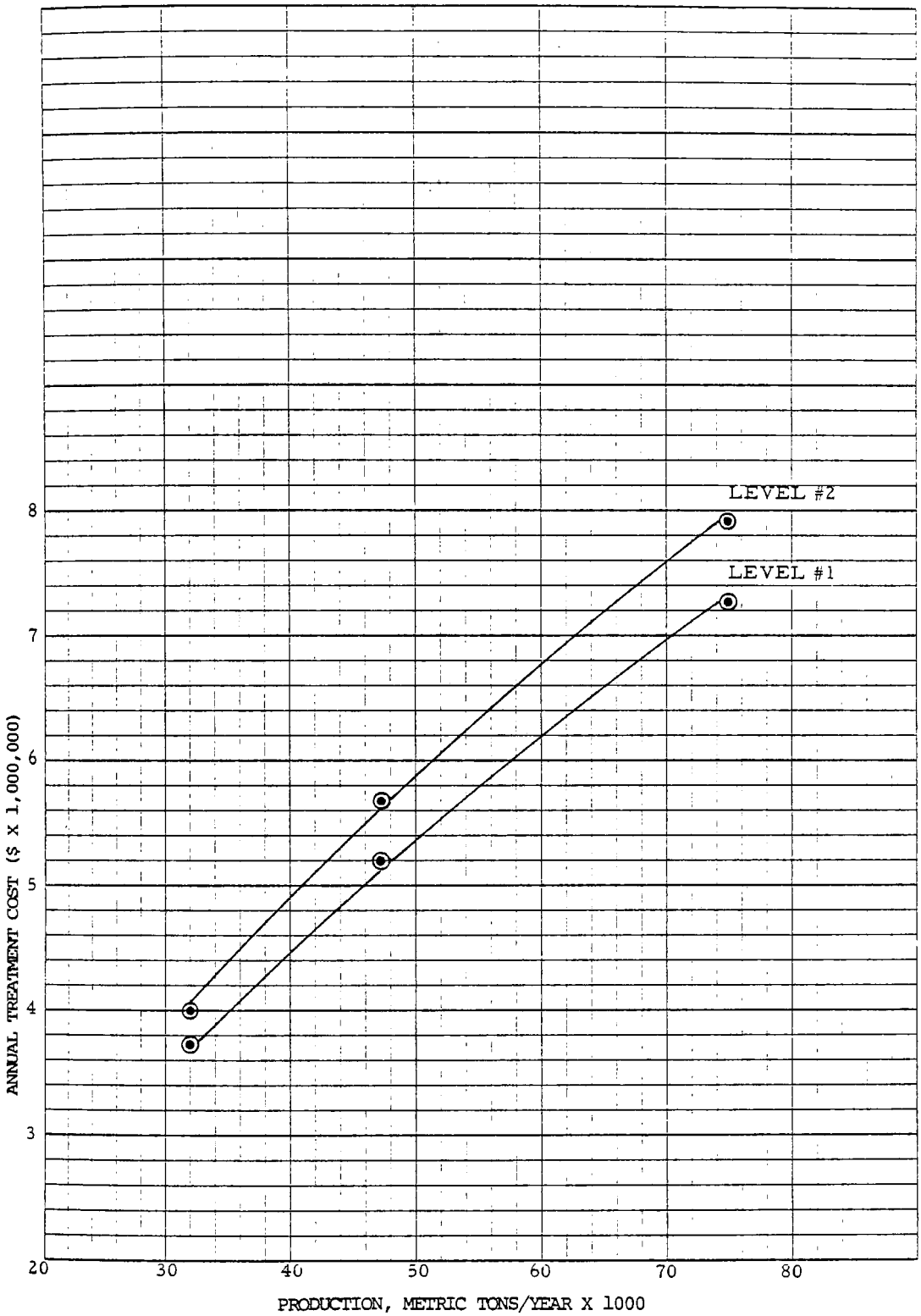

Figure 14-13. Annual treatment cost vs. production for the Titanium Dioxide Subcategory, Sulfate Process

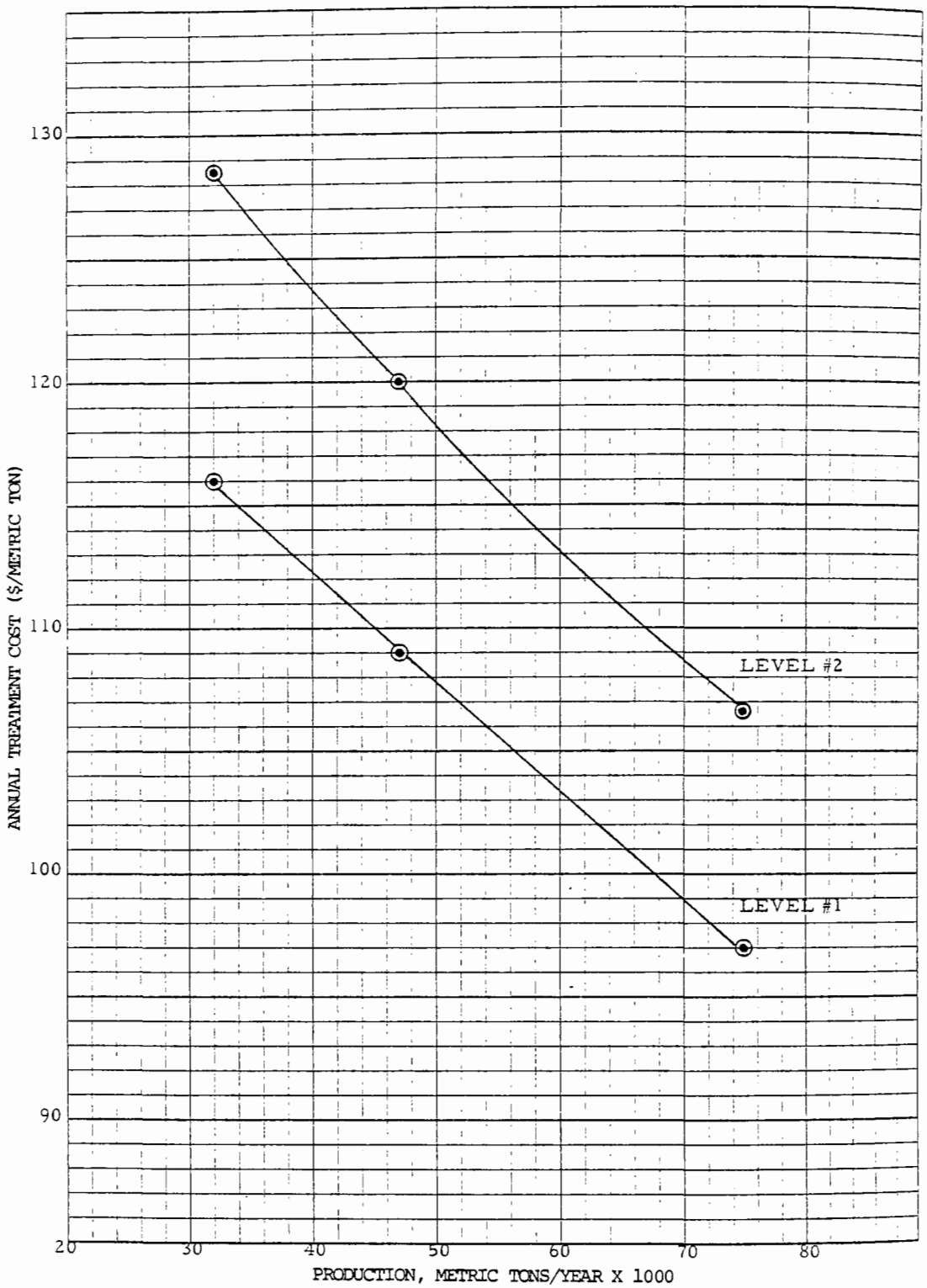

Figure 14-14. Annual unit treatment cost vs. production for the Titanium Dioxide Subcategory, Sulfate Process

TABLE 14-34 MODEL PLANT TREATMENT COSTS

Subcategory TITANIUM DIOXIDE Sulfate Type of Regulation BAT

	PRODUCTION (kkg/yr)	FLOW (m3/day)	Annual Treatment Costs ($/kkg) LEVEL OF TREATMENT FIRST $	SECOND $	THIRD $	FOURTH $
Annual Operation and Maintenance	31,800	61,600	94.50	9.83	Not Applicable	
	47,700	92,600	90.15	8.82		
	74,500	144,000	81.38	7.93		
Annual Amortization	31,800	61,600	21.77	2.51		
	47,700	92,600	18.85	2.10		
	74,500	144,000	15.95	1.62		
Total Cost	31,800	61,600	116.27	12.34		
	47,700	92,600	109.00	10.92		
	74,500	144,000	97.33	9.55		

SECTION 15

ALUMINUM FLUORIDE INDUSTRY

15.1 ASSESSMENT OF THE WATER POLLUTION POTENTIAL

15.1.1 Industrial Profile and Analytical Results

Aluminum fluoride is used as a raw material in the production of cryolite (sodium fluoroaluminate), which in turn is used in the production of aluminum. Aluminum fluoride is used also as a metallurgical flux (for welding rod coatings), as a ceramic flux (for glazes and enamels), and as a brazing flux (for aluminum fabrication).

The industry profile data for this subcategory is given in Table 15-1, while the existing regulations are given in Table 15-2.

Priority pollutants found at significant levels in the raw waste during sampling at Aluminum Fluoride plants were as follows:

Pollutant	Maximum Concentration Observed (ug/l) Screening	Verification (2 Plants)
Arsenic	200	475
Selenium	110	97
Chromium	77	1135
Copper	120	235
Cadmium	0.85	33
Mercury	2	11
Nickel	150	285

A summary of daily and unit product raw waste loads for all plants sampled can be found in Table 15-3. Individual plant raw waste loads per unit product found in sampling can be found in Table 15-4.

Based on the total annual production of this subcategory and the average waste load generated per unit product, the estimated total priority pollutant raw waste loads generated each year for this subcategory are as follows:

TABLE 15-1 - SUBCATEGORY PROFILE DATA SUMMARY

SUBCATEGORY	ALUMINUM FLUORIDE
Total subcategory capacity rate	
Total subcategory production rate	
Number of plants in this subcategory	7
308 Data on file for	6
With total capacity of	204,800 kkg/year
With total production of	143,400 kkg/year
Representing capacity	
Representing production	
Plant production range:	
Minimum	38 kkg/year
Maximum	45,600 kkg/year
Average production	24,300 kkg/year
Median production	35,500 kkg/year
Average capacity utilization	69 percent
Plant age range:	
Minimum	5 years
Maximum	21 years
Wastewater flow range:	
Minimum	539 cubic meters/day
Maximum	2,200 cubic meters/day
Volume per unit product:	
Minimum	12 cubic meters/kkg
Maximum	22 cubic meters/kkg

Sources of data are Stanford Research Institute, Directory of Chemical Producers, U.S.A., 1977, U.S. Department of Commerce, Current Industrial Reports, December 1977; Energy and Environmental Analysis, Inc.; Draft Report, "Preliminary Economic Assessment of Effluent Limitations in the Inorganic Chemical Industry."

TABLE - EXISTING REGULATIONS - EFFLUENT LIMITATION GUIDELINES

SUBCAT Aluminum Fluoride

SUBPAR W (40CFR 415.230, 5/22/75)

		STANDARDS					
		BPCTCA*		BATEA		NSPS	
Produ Proce	Para-meters	Max.[1] kg/kkg (mg/l)	Avg.[2] k/kkg (mg/l)	Max. k/kkg (mg/l)	Avg. k/kkg (mg/l)	Max. k/kkg (mg/l)	Avg. k/kkg (mg/l)
AlF_3	Fluoride	0.68 (40.0)**	0.34 (20.0)				
	TSS	0.86 (50.6)	0.43 (25.3)				
	Aluminum	0.34 (20.0)	0.17 (10.0)				

*Sectl5.230, 415.231, and 415.232 were revoked by the Agency (41 01, November 23, 1976).

[1]Maxximum of any one day.

[2]Avgerage of daily values for thirty consecutive days shall not exceed.

**flcs 17,000 l/kkg.

TABLE 15-3. SUMMARY OF RAW WASTE LOADINGS FOUND IN SCREENING AND VERIFICATION SAMPLING

SUBCATEGORY ALUMINUM FLUORIDE

Pollutant	Loadings						
	kg/day			kg/kkg			No. of Plants Averaged
	Minimum	Average	Maximum	Minimum	Average	Maximum	
Priority							
Arsenic, As	0.071	0.078	0.086	0.0007	0.0016	0.002	3
Cadmium, Cd		0.010			0.0002		1
Chromium, Cr	0.072	0.16	0.25	0.0016	0.0035	0.0054	2
Copper, Cu	0.02	0.16	0.33	0.0002	0.0033	0.0071	3
Nickel, Ni	0.025	0.13	0.26	0.00025	0.003	0.0056	3
Mercury, Hg	0.0013	0.0041	0.0095	0.000027	0.00005	0.00009	3
Selenium, Se	0.051	0.11	0.17	0.001	0.0015	0.002	2
Conventional							
TSS	751	2921	5510	16.3	53.7		
Fluorine, F	493	727	986	9.71	11.9		
Aluminum, Al	98.4	220	352	0.97	4.40		

TABLE 15-4. PRIORITY POLLUTANT RAW WASTE LOADS (in kg/kkg of Product)

SUBCATEGORY	ALUMINUM FLUORIDE		
POLLUTANT	PLANT		
	#705	#705	#251
Arsenic, As	0.002	0.002	0.0007
Selenium, Se	0.001		0.002
Chromium, Cr	0.0016	0.0054	
Copper, Cu	0.0027	0.0071	0.0002
Lead, Pb	0.0004	0.001	0.00014
Mercury, Hg	0.000036	0.000027	0.00009
Nickel, Ni	0.003	0.0056	0.00025
Zinc, Zn	0.008	0.0047	0.00046
		0.0002	

Pollutant	Waste Load (kg/year)
Arsenic	190
Selenium	180
Chromium	420
Copper	400
Mercury	6
Nickel	360

15.1.2 Process Waste Sources and Waste Water Treatment Data

General Process Description

Raw material and process - In the dry process for the manufacture of aluminum fluoride, partially dehydrated alumina hydrate is reacted with hydrofluoric acid gas. The reaction is given as:

$$Al_2O_3 + 6HF = 2AlF_3 + 3H_2O \quad (1)$$

The product, aluminum fluoride, is formed as a solid, and is cooled with non-contact cooling water before being sent for milling and shipping. The gases from the reactor are scrubbed with water to remove unreacted hydrofluoric acid before being vented to the atmosphere. A simplified flow diagram of the process is shown in Figure 15-1.

Water uses - Water is used in noncontact cooling of the product, for seals on vacuum pumps and for scrubbing the reacted gases before being vented to the atmosphere. Water is also used for leak and spill cleanup and equipment washdown. Table 15-5 gives a summary of water usage in the aluminum fluoride industry.

Sources of waste water

A. Noncontact cooling water - Noncontact cooling water is used to cool the product coming out of the reactor. In some cases it is recirculated and the blowdown treated separately from other process contact wastewater or discharged without treatment. The water can be monitored for fluoride and if process contamination occurs it can be diverted to the waste water treatment facility for fluoride removal.

B. Floor and equipment washings - The quantity and quality of waste water generated from those operations is variable and depends largely on the housekeeping practices at the individual plants.

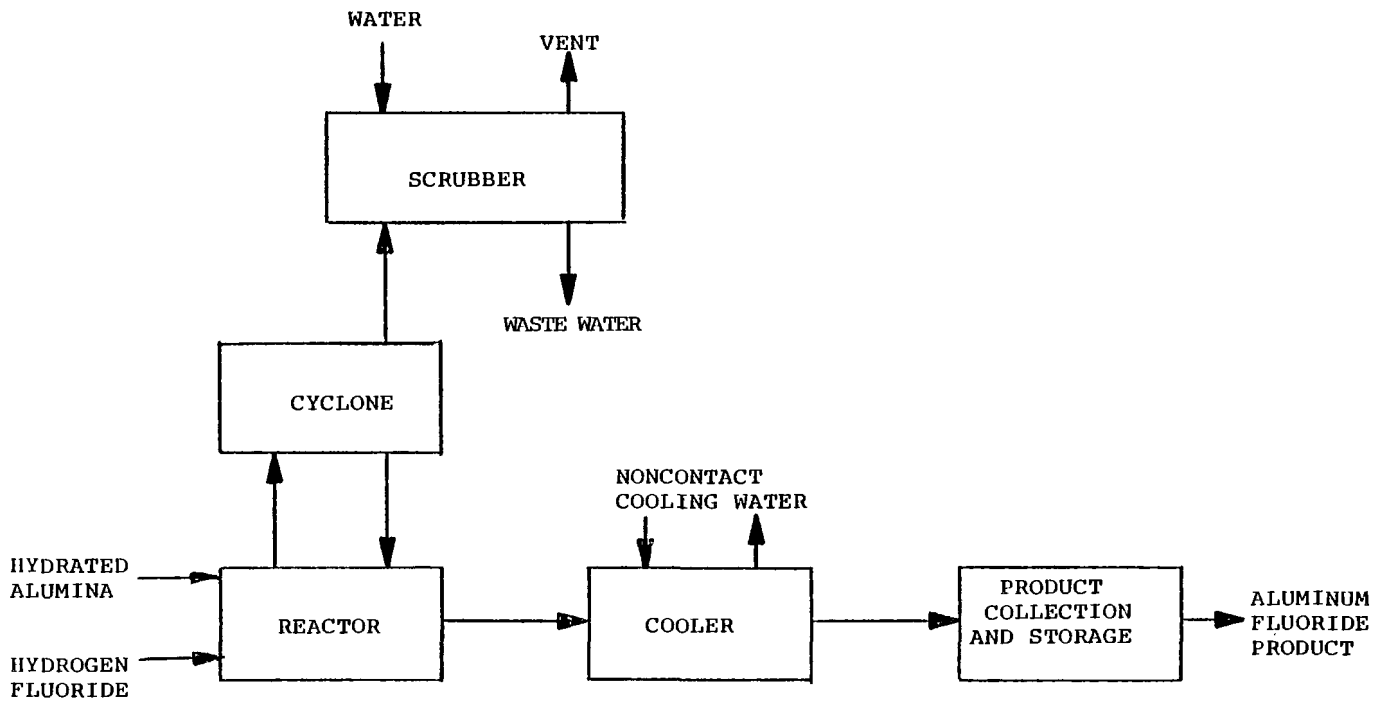

Figure 15-1. General process flow diagram for production of aluminum fluoride.

TABLE 15-5. WATER USAGE IN THE ALUMINUM FLUORIDE SUBCATEGORY

Source	Water use per unit of production m^3/kkg of AlF_3			
	Plant # 837	Plant # 705	Plant # 188	Plant # 605
Non-contact cooling	14.45	NA	6.95	NA
Indirect process contact (pumps, seals, leaks, spills)	12.21	1.15	NA	NA
Maintenance, e.g. cleaning and work area washdown	1.13	2.4	NA	1.60
Scrubber		9.52	3.46	19.95

NA = Not Available.

C. Scrubber waste water - This is the major source of waste water requiring treatment before being discharged or recycled back to the scrubber. It is contaminated with hydrofluoric acid, aluminum fluoride and aluminum oxide, and, in some cases, the presence of sulfuric acid and silicotetrafluoride has been detected. These originate as impurities in the hydrofluoric acid used in the process. Table 15-6 gives the range of waste water flows at different facilities.

Treatment System Description

The Best Practicable Technology - BPT consists of neutralization with lime to precipitate fluoride as calcium fluoride, followed by settling to remove suspended and precipitated solids.

Treatment practices - Plant #705 practices lime neutralization and settling of the waste waters. Since aluminum fluoride production is integrated with hydrofluoric acid production, the waste waters from the two processes are combined before treatment. The plant does not treat noncontact cooling water.

At Plant #837 the tail gases are scrubbed with soda ash solution, and the resulting solution is sent to an adjacent facility for use. The water from the wet scrubbers on the hydrated alumina dryers are also sent to an adjacent facility for use. The waste waters from area washdown are combined with other product wastewater, treated with hydrated lime and sent to a settling lagoon before being discharged.

Plant #188 produces aluminum fluoride in small quantities and in batches. The waste water from the batch operation is first sent to a collection pond. It then goes to a second pond where lime and alum are added and finally, to a third pond where the pH is adjusted by recarbonation.

Plant #605 mixes the aluminum fluoride waste with hydrofluoric acid plant waste. The combined waste water is sent to gypsum ponds for suspended solids removal. The supernatant is treated with an effluent stream from another plant product for pH control and neutralization. Because of the presence of complex fluorides (from the HF process) in the waste waters, the plant is planning in the near future to use a new proprietary process to further reduce fluoride levels in the final effluent.

Description of Plants Visited and Sampled

Screening - Plant #705 was visited in the screening phase of the program. Both hydrofluoric acid and aluminum fluoride are

TABLE 15-6. WASTE WATER FLOW AT PLANTS #837, #705 AND #605 FOR ALUMINUM FLUORIDE SUBCATEGORY

Source	Flow rate per unit of production m^3/kkg of AlF_3		
	Plant #837	Plant #705	Plant #605
Scrubber water	3.44	9.1	19.95
Maintenance equipment cleaning and work area washdown	1.13	2.39	1.61
Other (Storm water)	7.55	NA	NA

NA = Not Available.

produced at this facility by the general processes described earlier. The waste water from the hydrofluoric acid and aluminum fluoride plants are mixed and sent to the treatment facility. At the treatment facility the combined wastewater is neutralized with lime and sent to a series of settling ponds. The effluent from the last pond is given a final pH adjustment before a portion of it is discharged and the rest recycled to the process. Figure 15-2 shows a simplified block diagram of the process including the waste water treatment facility and sampling locations. Table 15-7 presents a summary of flow data of the sampled streams, and the emissions data for important classical pollutant parameters.

Plant #705 was visited again and the same streams sampled in the screening phase were sampled and analyzed in the verification phase. The variations in individual stream flows were small during the two phases of sampling. Table 15-7 summarizes the flow data and important classical pollutant emissions. A second plant (Plant #605) was visited and sampled in the verification phase. Simplified flow diagrams of the aluminum fluoride manufacturing plant and the waste water treatment facility showing the sampling locations are given in Figure 15-3. Table 15-8 gives the flow of the waste streams and the emissions of classical pollutants. The aluminum fluoride and hydrofluoric acid waste streams are combined and sent to a gypsum pond for suspended solids removal. The overflow from the pond is mixed with alkaline or acid streams from other plants for neutralization and pH adjustment before discharge.

Evaluation of Industry Production and Wastewater Flow Data

Figure 15-4 shows the relationship between production and waste water flow data. The data are taken from 308 Questionnaires, plant visits and development documents. Different wastes from the aluminum fluoride process are intermixed before treatment. As mentioned earlier, scrubber water constitutes the major source of the waste water stream in the aluminum fluoride subcategory. If the production of aluminum fluoride is integrated with hydrofluoric acid, then the waste waters from both plants are combined and treated.

Solid Waste Generation

In aluminum fluoride production, hydrofluoric gas and solids, such as aluminum trihydrate and aluminum fluoride, escape with the vent gases. During scrubbing the solids are suspended in the scrubber water, while hydrofluoric acid gas is dissolved. In the waste water treatment facility the wastewater is neutralized with lime and the calcium fluoride formed precipitates out and settles with the other suspended solids. In

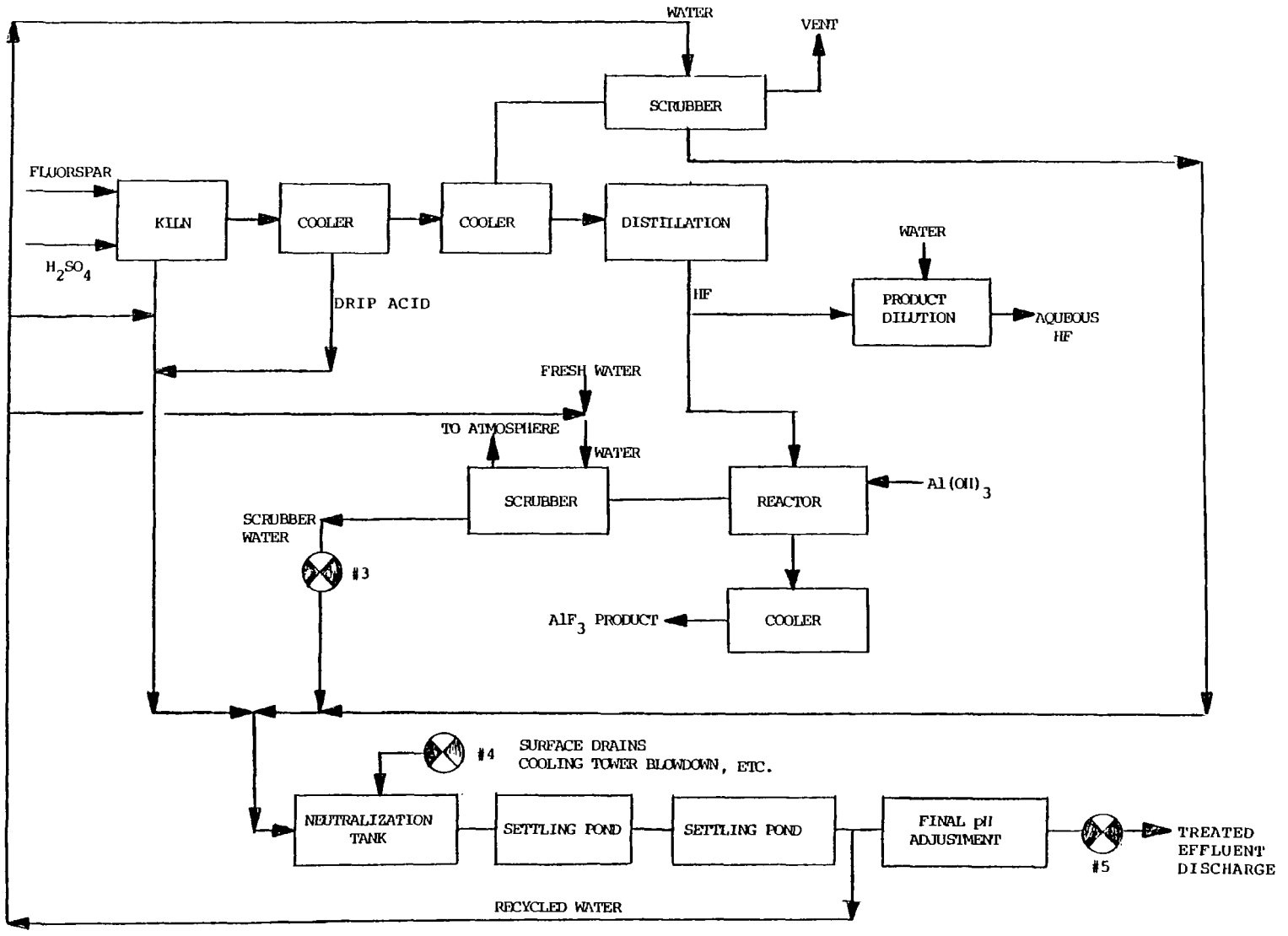

Figure 15-2. General process flow diagram at Plant #705 showing the sampling points. (Aluminum Fluoride Manufacture)

TABLE 15-7. FLOW AND POLLUTANT CONCENTRATION DATA OF THE SAMPLED WASTE STREAMS FOR PLANT #705 PRODUCING ALUMINUM FLUORIDE

Sampling Phase	Sampled Stream No.	Sampled Stream Description	Unit Flow	Unit SS Load kg/kkg of AlF_3	Unit Fluoride kg/kkg of AlF_3	Unit Aluminum kg/kkg of AlF_3
Screening	3	AlF_3 scrubber	8.9	117	4.67	6.94
	4*	Surface drains, cooling tower, blowdown, etc.	17.8	3.5	6.14	0.76
	5	Treated waste	24	1.98	1.63	0.168
Verification	3	AlF_3 scrubber	8.9	12.8	12.32	4.08
	4*	Surface drains, cooling tower, blowdown, etc.	17.8	3.57	3.01	0.475
	5	Treated waste	24	0.048	0.55	0.012

*This waste is contributed by both the HF and AlF_3 plants.

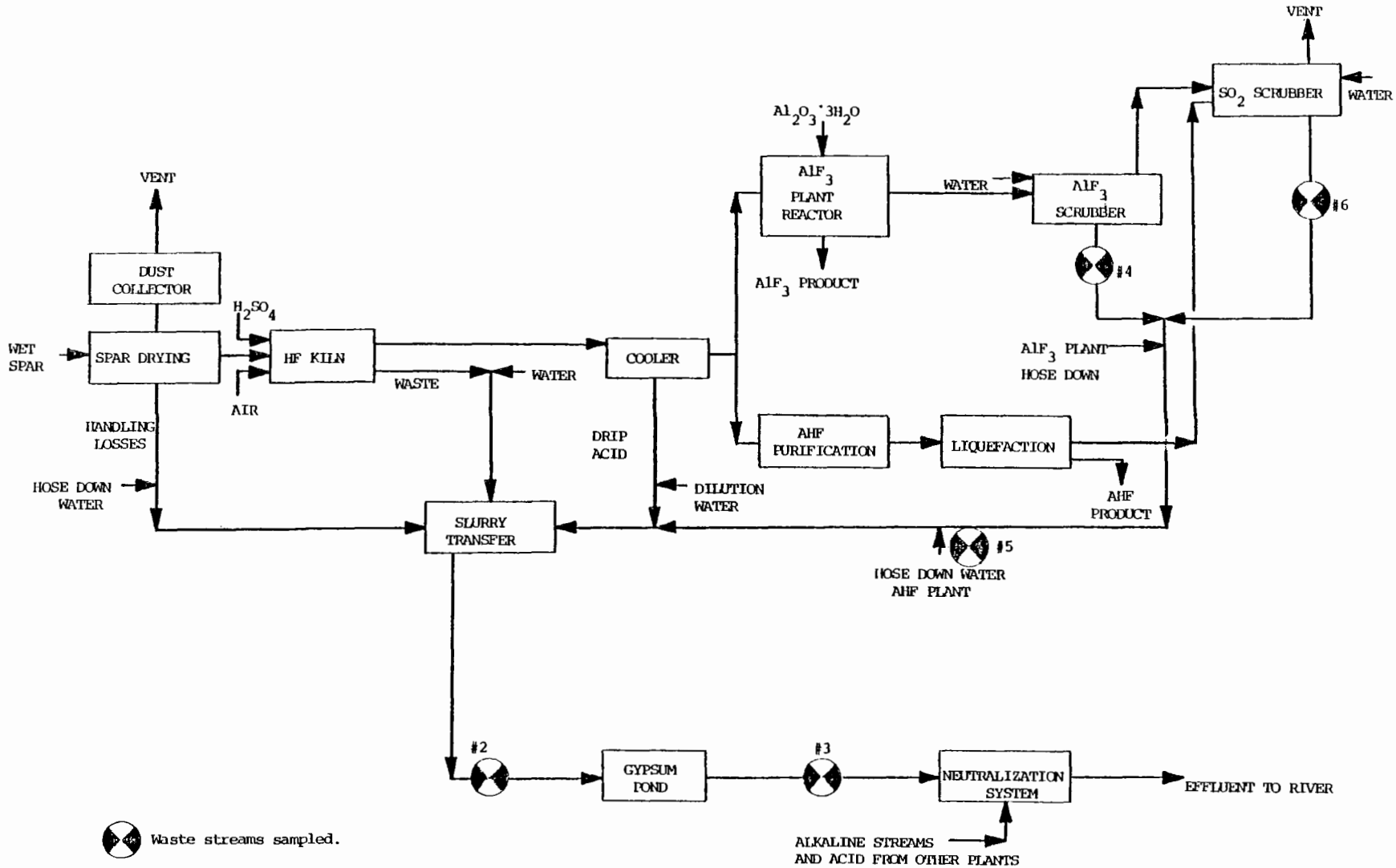

Figure 15-3. General process flow diagram at Plant #605 showing the sampling points. Aluminum Fluoride Manufacture

TABLE 15-8. FLOW AND POLLUTANT CONCENTRATION DATA OF THE SAMPLED STREAMS FOR PLANT #605 PRODUCING ALUMINUM FLUORIDE

Stream No.	Sampled Stream Description	Unit Flow m^3/kkg of AlF_3	Unit Fluoride Load kg/kkg of AlF_3	Unit SS Load kg/kkg of AlF_3
4	AlF_3 Scrubber Water	11.86	5.53	14.7
6	SO_2 Scrubber Water	12.2	19.3	2.6
2	Gypsum Pond Influent	24.86	16.35	NA
3	Gypsum Pond Effluent	24.8	8.00	0.232

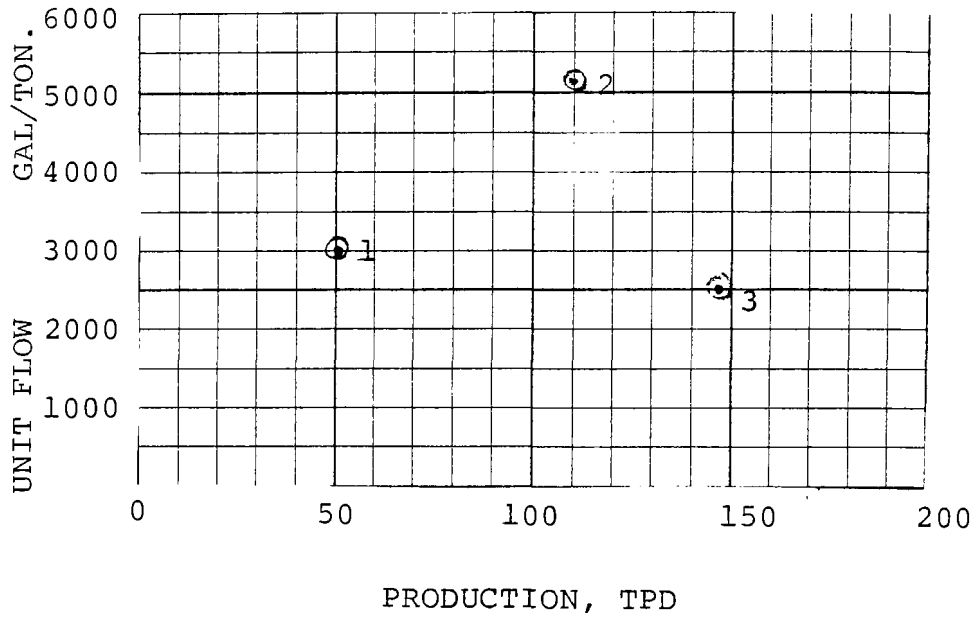

1 - Plant #705

2 - Plant #251

3 - Plant #837 *

* See Reference 2.

Figure 15-4. Production vs. Unit Waste Flow for Aluminum Fluoride Manufacture.

the majority of cases, the solids are retained in the lagoon for periods up to ten years. Table 15-9 gives a summary of the amounts of solids generated at two aluminum fluoride plants.

Process Modifications and Technology Transfer Options

1) Total recycle of waste water to the scrubbers is feasible if final neutralization is with soda ash. The calcium in the waste is precipitated as calcium carbonate and scaling problems in pipes and scrubbers are reduced.

2) Passage of the vent gases from the reactor through a cyclone prior to scrubbing with water will remove the aluminum oxide and aluminum fluoride particulates. The collected material in the cyclone can be recycled to the reactor. The installation of a cyclone will result in material recovery and will also reduce the suspended solids load going to the waste water treatment facility.

Best Management Practices

1) Rainfall runoff in plant areas and treatment facilities and other places susceptible to fluoride contamination can be collected and sent to the waste water treatment facility.

2) If solid wastes containing fluoride are stored on land, studies should be conducted to ascertain the risk of contaminating ground water. Where necessary, provisions can be made for collection and treatment of leachate, permeate, and runoff.

3) Settling ponds in the waste water treatment facility should be deep enough (or provided with baffles) to eliminate or reduce the stirring effect of winds and rainfall. This will reduce the incidence of weather-related plant upsets, and suspended solids limitations will be more consistently met.

Model Plant and BPT Treatment System Specifications

Waste water flow - The range of waste water data on file shows flow variations from 11.5 m3/kkg of AlF3 to 21.5 m3/kkg of AlF3 (see Table 15-6). Based on these values, a unit flow of 15.2 m3/kkg of AlF3 was taken as the average for the waste water treatment model plant for cost estimation.

Production - Six plants manufacture aluminum fluoride at a total production rate of 120,000 kkg/yr. Individual plant production rates range from a minimum of 38 kkg/yr to a maximum of 45600 kkg/yr with a mean of 24,300 and a median of 35,500

TABLE 15-9. SOLIDS GENERATED AT PLANT #705 AND #605 PRODUCING ALUMINUM FLUORIDE

Plant	Total Solids Generated kg/kkg of AlF_3
#705	54
#605	69

kkg/yr. For waste water treatment cost estimates, three production levels were selected as model plants. These three models reflect the production levels of the plants for which data is on file (excluding a small batch operation plant) and are 17,500 kkg/yr, 39,200 kkg/yr and 50,400 kkg/yr.

Pollutant loadings - Observed pollutant loadings varied from 14 to 27 kg/kkg of AlF3 for suspended solids and from 5.4 to 39.5 kg/kkg of AlF3 for fluoride. The data sources are as follows:

Source of Data	TSS kg/kkg-AlF3	F kg/kkg-AlF3
EPA Document 1974[Ref]	16-20	15-20
Screening and Verification Phase - Plant Data	14-27	5.4-39.5

For model plants pollutant loadings of 20 kg of suspended solids and 18 kg of fluoride per kkg of AlF3 were used to establish treatment requirements.

Treatment chemicals - Lime (CaO powder form) is added to precipitate fluoride and to raise the pH to the range six to nine. For each of the model plants, lime is added as 25 percent in excess over the stoichiometric requirements for fluoride precipitation. For advanced treatment, ferrous sulfide is added to give a concentration of 10 ppm. This acts as a polishing step to remove additional trace metals from the effluent. For a more advanced level of treatment, soda ash is added in addition to lime (CaO). The soda ash dosage was assumed to be 770 kg/kkg.

Variation in flow and pollution loading - To indicate the effect on costs of higher and lower pollutant loadings, cost estimates were developed for one model plant (35,600 kkg-AlF3/yr) at 27 kg of SS/ kkg-AlF3 and 30 kg fluoride/kkg-AlF3 and 14 kg fluoride/kkg-AlF3. The waste water flow for these additional estimates was maintained the same as in the original mode (i.e., 15 m3/kkg-AlF3). Unit flows were also varied to monitor the sensitivity of cost to plant size. In this case, the pollutant loads were assumed to be the same as in the original model. The range of flows used were 10.1 m3/kkg to 22.8 m3/kkg.

Generation of Solids - From the pollutant loadings and treatment chemicals above, the waste treatment residue consists of 20 kg/kkg of suspended solids plus 46.2 kg/kkg from added chemicals. Thus, the total solids generated are 66.2 kg/kkg of product. After mechanical removal to self draining piles at site, the combined fluoride (AsCaF2) is reasonably stable at the reaction pH reached during lime treatment.

15.2 TECHNOLOGY BASED POLLUTION ABATEMENT

15.2.1 Advanced Level Treatment Applications

Control of Significant Observed Priority Pollutants

The priority pollutants found in actual plant waste waters include copper, arsenic, chromium, and selenium. In the case of selenium, it is apparent that the source was largely the raw water supply and is therefore not regarded as a process related pollutant, but the control of selenium in the treated effluent may be required.

Copper and chromium may be present as trace impurities in the hydrofluoric acid used to react with bauxite to form aluminum fluoride. Arsenic may originate as an impurity in the bauxite ore. Waste treatment processes should be designed to control fluoride, copper, arsenic, and chromium.

Removal Technologies Available

Copper and chromium can be precipitated as hydroxides at alkaline pH levels, and in clarified solutions they may be exchanged for hydrogen or sodium ions by ion exchange. Copper and chromium at low levels may also be controlled by xanthate precipitation, although the process is not widely used. Sulfide precipitation will reduce copper to very low levels but will not control chromium or arsenic. Although the mechanism is not clear, arsenic levels appear to be reduced in the lime neutralization process followed at most plants, perhaps by entrapment or adsorption of the oxide during the precipitation of calcium fluoride. A combination of lime and ferric sulfate coagulation is probably the most effective practical method for reducing arsenic concentrations.

Selection of Appropriate Technology

BPT (Level 1) - Lime is widely used in the industry to remove the primary nonconventional pollutant as calcium fluoride. Because lime neutralization to pH 10 results in significant incidental removal of copper, chromium, and arsenic, alkaline precipitation was chosen as BPT (Level 1) technology.

Level 2 - Improved removal of the suspended precipitate is achieved by dual media filtration.

Level 3 - Sulfide precipitation is used to attain a higher level of copper removal.

Level 4 - The technology is similar to Level 2, except that soda ash is substituted for part of the lime treatment, permitting partial recycling of effluent.

Flow Diagrams

The facilities to achieve each level of treatment are shown schematically in the following diagrams:

Level 1	Figure 15-5
Level 2	Figure 15-6
Level 3	Figure 15-7
Level 4	Figure 15-8

Equipment functions Level 1 - This consists of flow equalization with first stage lime application followed by second stage lime application and lagoon settling. The final pH is adjusted with hydrochloric acid to the 6-9 range before discharge through an effluent monitoring system.

Level 2 - Dual media filtration is added to provide better control of suspended solids, including heavy metal hydroxides, which are returned to the lagoons as filter backwash.

Level 3 - Ferrous sulfide is prepared on site from ferrous sulfate and sodium bisulfide and is added ahead of the dual media filter shown in Level 2, to reduce heavy metals (except chromium) to lower levels by sulfide precipitation.

Level 4 - A modification of Level 2 which allows partial recycling of final effluent by substituting soda ash for part of the lime treatment, and settling the resulting calcium carbonate in a clarifier before filtration. This step reduces the calcium saturation and permits recycling of effluent without serious scaling problems. Although a small blowdown of effluent is maintained for control of salinity the total mass discharge of priority pollutants is less than that achieved in Level 2 due to the lower effluent flow rate.

Chemicals and handling - In BPT (Level 1) and in Level 2, two-stage neutralization is accomplished with lime alone, using conventional handling equipment to deliver milk of lime to two points of application. In Level 3, a mixture of ferrous sulfate and sodium bisulfide is prepared in a well-ventilated space and applied with a conventional solution feeder to the inlet of the Level 2 dual media filter. With adequate ventilation and proper pH control in this chemical preparation, there are no unusual problems in chemical handling. In Level 4, soda ash is used to

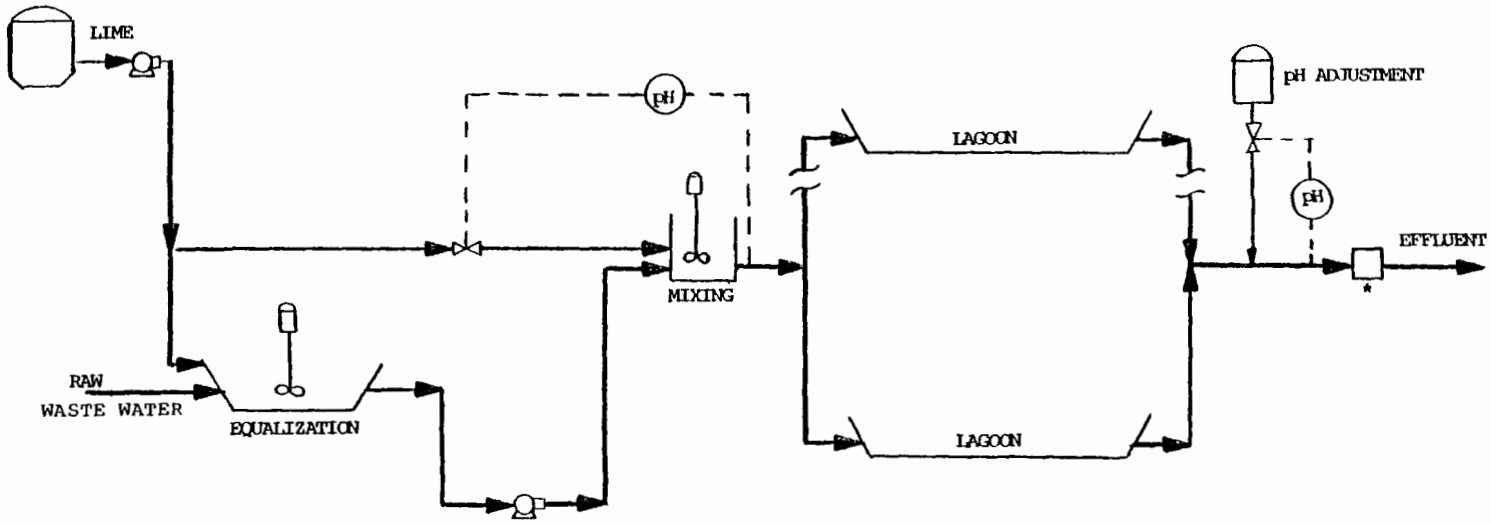

*Includes flow monitoring, pH monitoring and sampler.

Figure I-5-5. Waste water treatment Level 1 for aluminum fluoride subcategory.

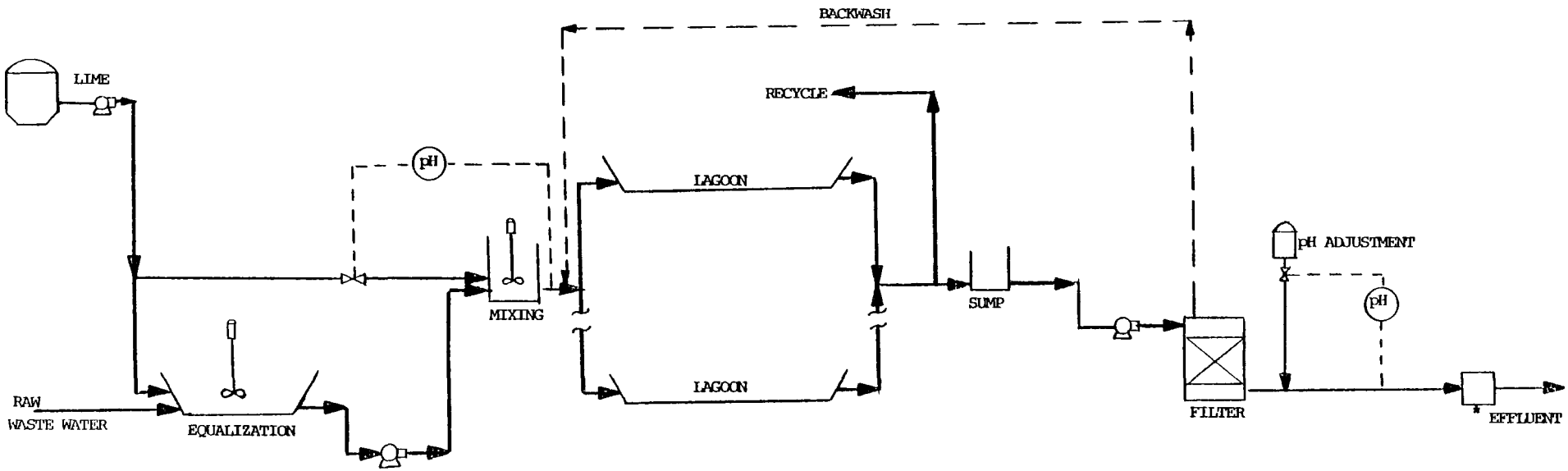

*Includes flow monitoring, pH monitoring and sampler.

Figure 15-6. Waste water treatment Level 2 for aluminum fluoride subcategory.

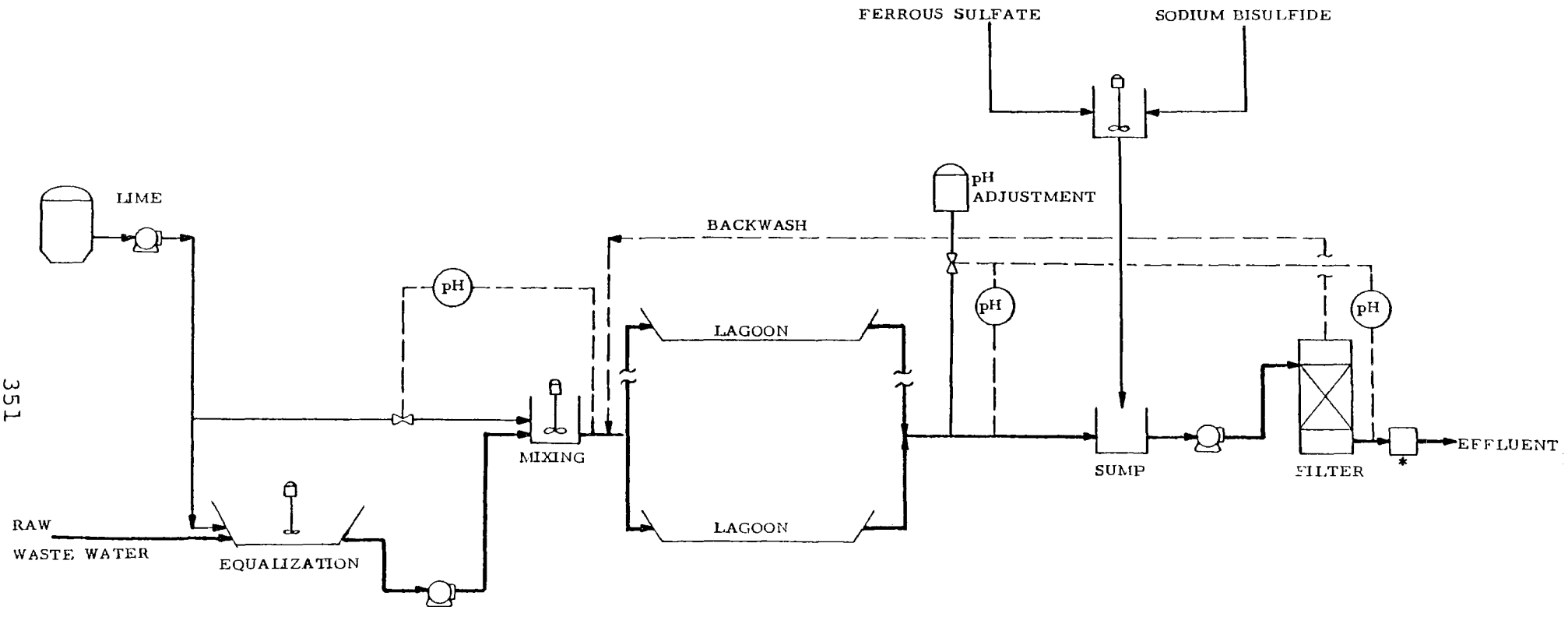

*Includes flow monitoring, pH monitoring and sampler

Figure 15-7. Waste water treatment Level 3 for aluminum fluoride subcategory.

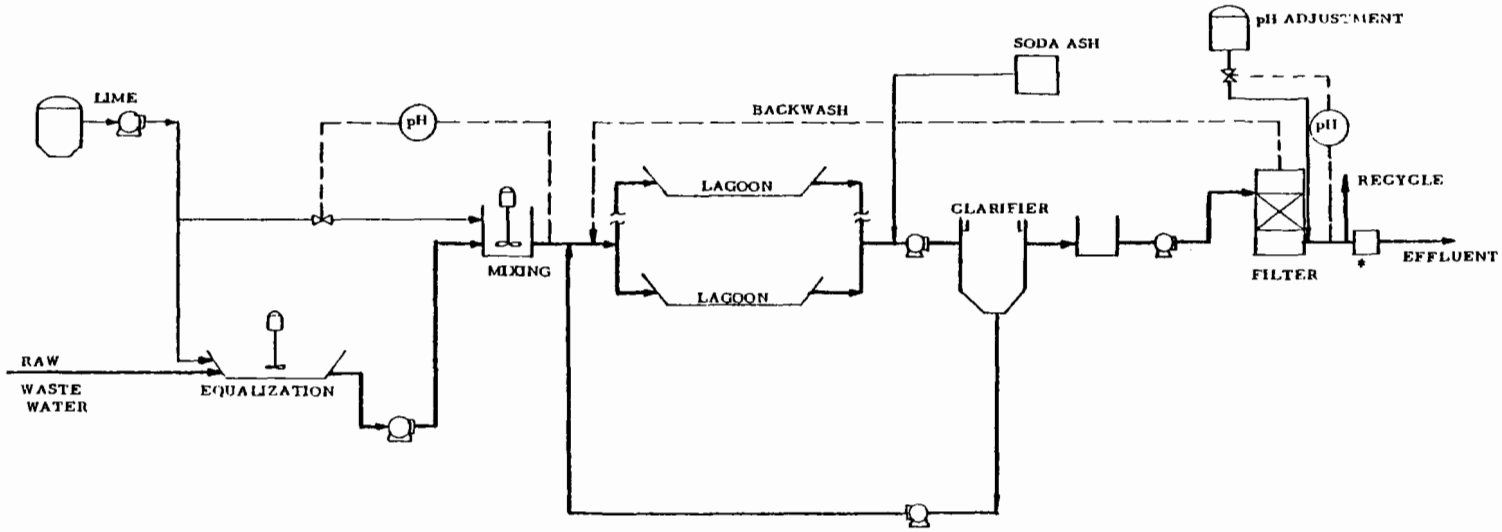

*Includes flow monitoring, pH monitoring and sampler

Figure 15-8. Wastewater treatment Level 4 for aluminum fluoride subcategory

furnish part of the alkalinity, employing conventional dry chemical feeding equipment for this non-hazardous chemical.

Separation and removal of solids - At all levels of treatment the precipitated solids are removed mechanically from the lagoons at regular intervals and are piled in self-draining areas near the lagoons, on land provided for a ten-year operating period. Fluoride and priority pollutants are in the insoluble or adsorbed form and do not constitute a hazard to the local environment when left at the plant site under controlled conditions, i.e., with leachate and permeate control.

Monitoring requirements - Control of fluoride and priority pollutants in the treatment process can be reasonably assured by pH and fluoride ion field testing equipment. At advanced levels very low values of toxic metals and arsenic are best detected by atomic absorption methods, normally performed in commercial laboratories on carefully collected and composited samples.

15.2.2 Estimated Performance of BPT Systems

Raw waste pollutant loads found in the aluminum fluoride subcategory were presented earlier. The major pollutants previously regulated are suspended solids, fluoride and aluminum.

The priority pollutants that were found in quantities that might require control and regulation are selenium and copper.

BPT has been identified as lime precipitation of fluorides followed by settling to remove suspended solids.

Base Level Performance Characteristics for BPT Pollutant Removal

The three major manufacturers of aluminum fluoride also produce hydrofluoric acid at the same facility. Two of the plants treat both sources of waste water together; the third uses the aluminum fluoride wastes in other proceses. Consequently, no data are available for the separate treatment of aluminum fluoride waste water. However, it can be assumed that the effluent quality achievable will be at least equivalent to that of the hydrofluoric acid subcategory since BPT technology is the same for the two subcategories.

Table 15-10 presents effluent quality achievable through the implementation of BPT or Level 1 technology for aluminum fluoride plants.

TABLE 15-10 CONTROL PARAMETER LIMITATIONS
SUBCATEGORY: Aluminum Fluoride
Level of Treatment: 1
Waste Water Flow: 15.2 m3/kkg

Pollutant	Subcategory Performance (mg/l)	(1) VFR	Quality Limit (mg/l) 30 day Aver	Quality Limit (mg/l) 24 hr Max	Emission Limit (kg/kkg) 30 day Aver	Emission Limit (kg/kkg) 24 hr Max
BPT Pollutants:						
Total Suspended Solids, TSS	- (2)	2.0	37.5	75	0.57	1.1
Aluminum, Al	- (2)	3.0	4.0	12	0.06	0.18
Fluoride, F	- (2)	3.0	37.5	112	0.57	1.7
Proposed Priority Pollutants						
Copper, Cu	- (2)	2.0	0.5	1.0	0.008	0.015
Selenium, Se	- (2)	2.0	0.2	0.4	0.003	0.006

(1) - VFR: ratio of the 24 hour variability factor to the 30 day variability factor.

(2) - Specific plant performance data is available only for the combined treatment of HF and AlF3 process wastes.

Base Level (BPT) Performance Characteristics for Priority Pollutant Removal

Pretreatment Applications

No aluminum fluoride manufacturing facilities are known to discharge to a POTW. BPT technology will be applicable, however, should such a discharge occur in the future.

Response to Remand Issues

Industry's arguments regarding the regulation of hydrofluoric acid and aluminum fluoride waste discharges have primarily centered on the treatability of fluorides. Complex fluorides not amenable to treatment do occur in hydrofluoric acid drip acid waste. However, no complex fluorides are known to occur in aluminum fluoride waste waters.

Industry also recommended that the two subcategories be combined or that a third subcategory be established for facilities where hydrofluoric acid and aluminum fluoride are both manufactured. This subject is discussed in Section 4 dealing with subcategorizations.

15.2.3 Estimated Performance of Advanced Level Systems

Advanced Level Performance Estimates for BPT and Priority Pollutant Removal

Implementation of advanced level treatment alternatives are estimates to achieve the effluent quality presented in Table 15-11, 15-12, and 15-13.

New Source Applications

Examination of waste water control and treatment alternatives applicable to new facilities for the production of aluminum fluoride has led to the conclusion that the technology applicable to NSPS is 80 percent recycle of treated waste waters to air pollution control scrubbers, identified as Level 4. This technology exists in the Hydrofluoric Acid Subcategory.

TABLE 15-11 CONTROL PARAMETER LIMITATIONS
SUBCATEGORY: Aluminum Fluoride
Level of Treatment: 2
Waste Water Flow: 15.2 m3/kkg

Pollutant	Treatability (mg/l)	(1) VFR	Quality Limit (mg/l)		Emission Limit (kg/kkg)	
			30 day Aver	24 hr Max	30 day Aver	24 hr Max
BPT Pollutants:						
Total Suspended Solids, TSS	15	2.0	15	30	0.23	0.46
Aluminum, Al	4.0	3.0	4.0	12	0.06	0.18
Fluoride, F	25	3.0	25	75	0.38	1.1
Proposed Priority Pollutants						
Copper, Cu	0.1	2.0	0.1	0.2	0.0015	0.003
Selenium, Se	0.1	2.0	0.1	0.2	0.0015	0.003

(1) - VFR: ratio of the 24 hour variability factor to the 30 day variability factor.

TABLE 15-12 CONTROL PARAMETER LIMITATIONS
SUBCATEGORY: Aluminum Fluoride
Level of Treatment: 3
Waste Water Flow: 15.2 m3/kkg

Pollutant	Treatability (mg/l)	(1) VFR	Quality Limit (mg/l)		Emission Limit (kg/kkg)	
			30 day Aver	24 hr Max	30 day Aver	24 hr Max
BPT Pollutants:						
Total Suspended Solids, TSS	15	2.0	15	30	0.23	0.46
Aluminum, Al	4.0	3.0	4.0	12	0.06	0.18
Fluoride, F	25	3.0	25	75	0.38	1.1
Proposed Priority Pollutants						
Copper, Cu	0.05	2.0	0.05	0.1	0.0008	0.0015
Selenium, Se	0.1	2.0	0.1	0.2	0.0015	0.003

(1) - VFR: ratio of the 24 hour variability factor to the 30 day variability factor.

TABLE 15-13 CONTROL PARAMETER LIMITATIONS
SUBCATEGORY: Aluminum Fluoride
Level of Treatment: 4
Waste Water Flow: 3 m3/kkg (80% Recycle)

Pollutant	Treatability (mg/l)	(1) VFR	Quality Limit (mg/l)		Emission Limit (kg/kkg)	
			30 day Aver	24 hr Max	30 day Aver	24 hr Max
BPT Pollutants:						
Total Suspended Solids, TSS	15	2.0	15	30	0.045	0.09
Aluminum, Al	4.0	3.0	4.0	12	0.012	0.036
Fluoride, F	25	3.0	25	75	0.075	0.15
Proposed Priority Pollutants						
Copper, Cu	0.1	2.0	0.1	0.2	0.0003	0.0006
Selenium, Se	0.1	2.0	0.1	0.2	0.0003	0.0006

(1) - VFR: ratio of the 24 hour variability factor to the 30 day variability factor.

15.2.4 Cost Estimates

General Discussion

The estimated costs for models having three different production and four levels of treatment are given in Tables 15-14, 15-15 and 15-16. For these models, both the hydraulic and pollution loads per unit of production are held constant over the entire range of production. Annual treatment cost as a function of production is shown graphically in Figure 15-9. Similarly, treatment cost per metric ton of product is given in Figure 15-10.

To indicate the effects on cost of varying the pollutant load per unit of product, cost estimates were developed for one medium size production model plant at higher solids and pollutant (fluoride) loadings. For these models the hydraulic load per unit of production was held constant. The cost estimates for these models are given in Tables 15-17 and 15-18. The effects on costs of varying the unit pollutant load are shown graphically in Figures 15-11 and 15-12 at Levels 1 and 4. Variation of pollutant loads has a significant impact on Level 1, but had no effect on the incremental costs of treatment at levels 2 and 3 which are not shown.

To judge the effects on cost of varying the hydraulic load per unit of production, cost estimates were developed for one medium size production model plant at a higher and a lower hydraulic loadings. The pollutant load per unit of production was held constant for these models. Tables 15-19 and 15-20 show the cost estimates. At treatment Levels 2, 3 and 4 the effects on costs of varying the per unit hydraulic load are shown graphically in Figures 15-13, 15-14, and 15-15. Hydraulic load variation had no significant effect on the costs of treatment at Level 1. Table 15-21 presents a summary of the unit cost distribution between amortization and the operation and maintenance cost components at various production and levels of treatment. The effects on cost due to variations in unit pollutant and hydraulic loads are also shown in Table 15-21.

Summary

At the first level of treatment, chemicals, labor, and amortization have significant impact on the annual costs. At second, third and fourth levels of treatment, the operation and maintenance cost comprises of approximately two-thirds of the additional annual costs, and the remaining one-third is due to amortization.

TABLE 15-14 MODEL PLANT TREATMENT COSTS

Subcategory ALUMINUM FLUORIDE — Type of Regulation BAT

Production 15,900 metric tons per year (17,529 tons per year)
45 metric tons per day (50 tons per day)

Waste water flow 690 cubic meters per day.

	LEVEL OF TREATMENT*			
	FIRST	SECOND	THIRD	FOURTH
A. INVESTMENT COST				
Construction	$39,800	$10,000	$14,000	$20,500
Equipment in place, including piping, fittings, electrical work and controls.....	192,000	68,000	74,000	172,000
Monitoring equipment in place.....	9,000			
Engineering design and inspection.....	48,160	15,600	17,600	38,500
Incidentals, overhead, fees, contingencies...	48,160	15,600	17,600	38,500
Land.....	24,000			
TOTAL INVESTMENT COST	$361,120	$109,200	$123,200	$269,500
B. OPERATION AND MAINTENANCE COST				
Labor and supervision.	$56,000	$14,000	$14,000	$14,000
Energy.....	3,400	600	900	2,500
Chemicals.....	35,000		800	9,800
Maintenance.....	33,712	10,920	12,320	26,950
Taxes and insurance...	10,833	3,276	3,696	8,085
Residual waste disposal.....	5,400			
Monitoring, analysis and reporting.....	15,000	7,500	7,500	7,500
TOTAL OPERATION AND MAINTENANCE COST	$159,345	$36,296	$39,216	$68,835
C. AMORTIZATION OF INVESTMENT COST	$54,849	$17,766	$20,044	$43,847
TOTAL ANNUAL COST	$214,194	$54,062	$59,260	$112,682

*First level represents the base cost of treatment system.
Other levels represent the incremental cost above base cost.

TABLE 15-15. MODEL PLANT TREATMENT COSTS

Subcategory ALUMINUM FLUORIDE — Type of Regulation BAT

Production 35,600 metric tons per year (39,249 tons per year)
101 metric tons per day (112 tons per day)
Waste water flow 1550 cubic meters per day.

	LEVEL OF TREATMENT*			
	FIRST	SECOND	THIRD	FOURTH
A. INVESTMENT COST				
Construction	$63,600	$15,000	$19,000	$34,000
Equipment in place, including piping, fittings, electrical work and controls.....	238,000	84,000	90,500	259,000
Monitoring equipment in place.....	9,000			
Engineering design and inspection.....	62,120	19,800	21,900	58,600
Incidentals, overhead, fees, contingencies...	62,120	19,800	21,900	58,600
Land.....	42,000			
TOTAL INVESTMENT COST	$476,840	$138,600	$153,300	$410,200
B. OPERATION AND MAINTENANCE COST				
Labor and supervision.	$56,000	$14,000	$14,000	$14,000
Energy.....	5,500	900	1,300	3,100
Chemicals.....	80,000		1,800	18,800
Maintenance.....	43,484	13,860	15,330	41,020
Taxes and insurance...	14,305	4,158	4,599	12,306
Residual waste disposal.....	12,500			
Monitoring, analysis and reporting.....	15,000	7,500	7,500	7,500
TOTAL OPERATION AND MAINTENANCE COST	$226,789	$40,418	$44,529	$96,726
C. AMORTIZATION OF INVESTMENT COST	$70,748	$22,550	$24,941	$66,739
TOTAL ANNUAL COST	$297,537	$62,968	$69,470	$163,465

*First level represents the base cost of treatment system.
Other levels represent the incremental cost above base cost.

TABLE 15-16. MODEL PLANT TREATMENT COSTS

Subcategory ALUMINUM FLUORIDE — Type of Regulation BAT

Production 45,800 metric tons per year (50,494 tons per year)
130 metric tons per day (144 tons per day)
Waste water flow 1990 cubic meters per day.

	LEVEL OF TREATMENT*			
	FIRST	SECOND	THIRD	FOURTH
A. INVESTMENT COST				
Construction	$76,500	$20,500	$24,500	$43,000
Equipment in place, including piping, fittings, electrical work and controls.....	281,000	110,000	116,500	317,000
Monitoring equipment in place.....	9,000			
Engineering design and inspection.....	73,300	26,100	28,200	72,000
Incidentals, overhead, fees, contingencies...	73,300	26,100	28,200	72,000
Land.....	60,000			
TOTAL INVESTMENT COST	$573,100	$182,700	$197,400	$504,000
B. OPERATION AND MAINTENANCE COST				
Labor and supervision.	$56,000	$14,000	$14,000	$14,000
Energy.....	7,400	1,500	1,900	4,300
Chemicals.....	100,000		2,400	26,400
Maintenance.....	51,310	18,270	19,740	50,400
Taxes and insurance...	17,193	5,481	5,922	15,120
Residual waste disposal.....	16,000			
Monitoring, analysis and reporting.....	15,000	7,500	7,500	7,500
TOTAL OPERATION AND MAINTENANCE COST	$262,903	$46,751	$51,462	$117,720
C. AMORTIZATION OF INVESTMENT COST	$83,481	$29,725	$32,116	$82,000
TOTAL ANNUAL COST	$346,384	$76,476	$83,578	$199,720

*First level represents the base cost of treatment system.
Other levels represent the incremental cost above base cost.

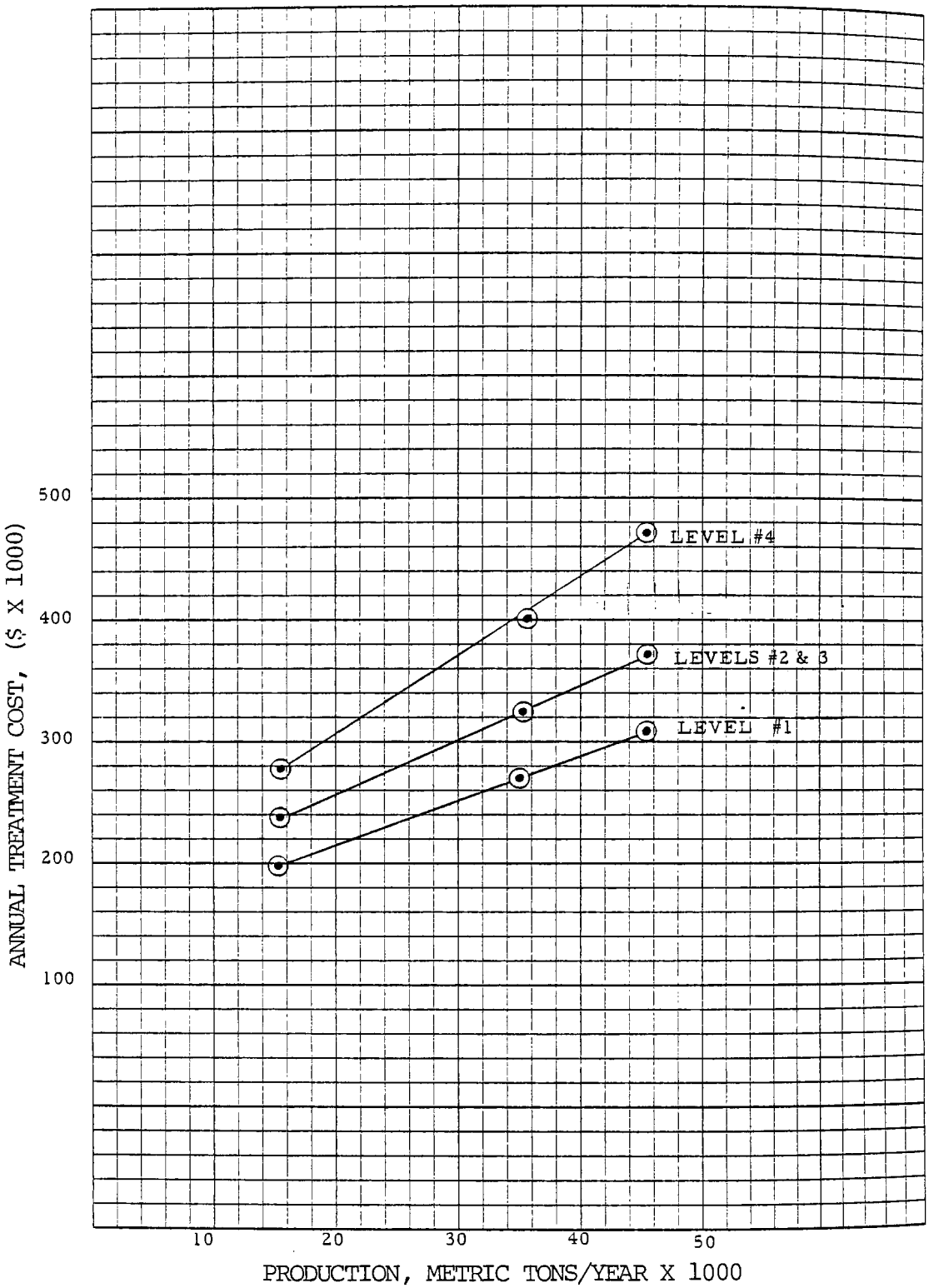

Figure 15-9. Annual treatment cost vs. production for the Aluminum Fluoride Subcategory

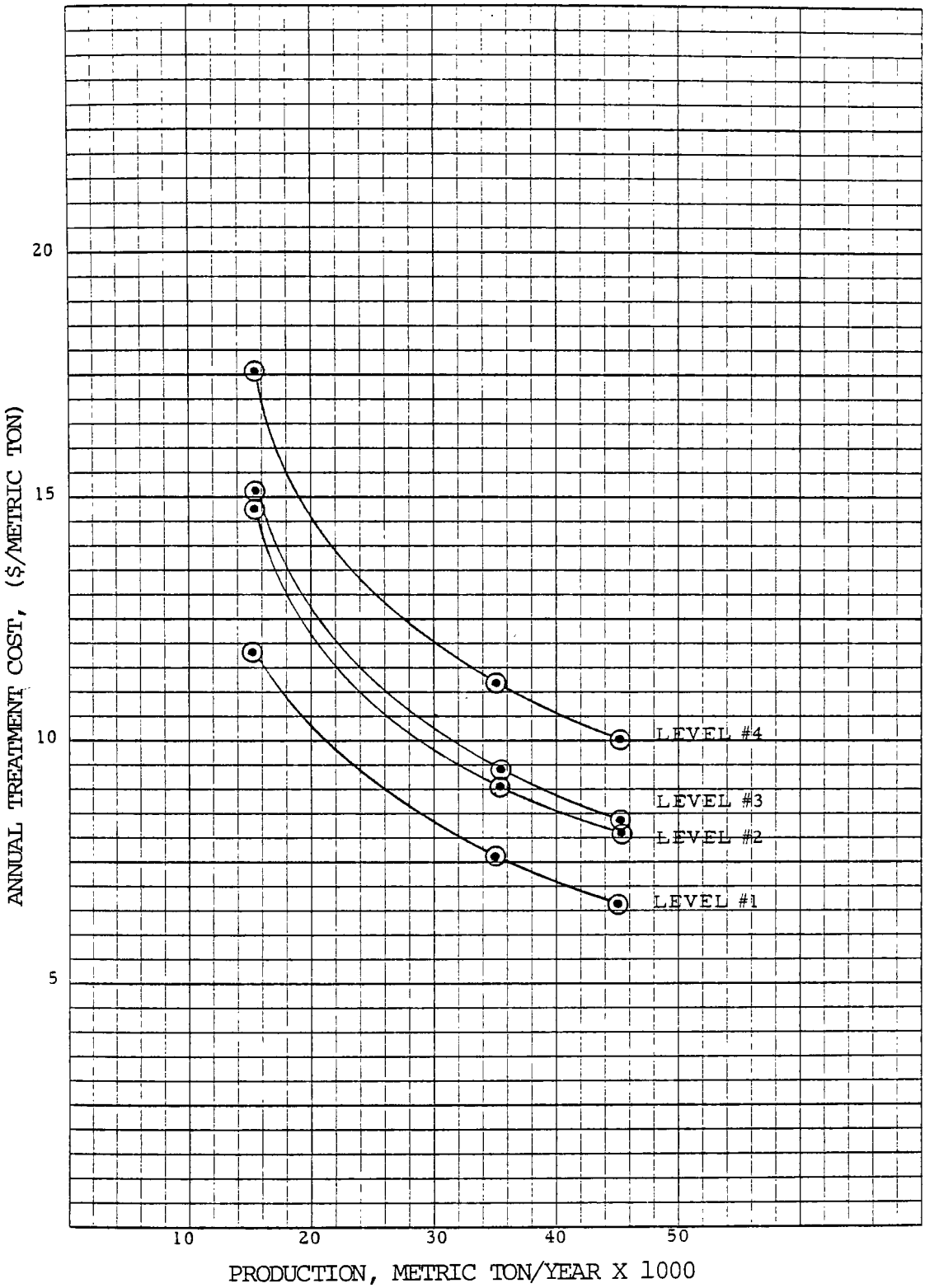

Figure 15-10. Annual unit treatment cost vs. production for the Aluminum Fluoride Subcategory

TABLE 15-17. MODEL PLANT TREATMENT COSTS

Subcategory ALUMINUM FLUORIDE — Type of Regulation BAT

Production 35,600 metric tons per year (39,249 tons per year)
101 metric tons per day (112 tons per day)
Waste water flow 1550 cubic meters per day.

	LEVEL OF TREATMENT*			
	FIRST	SECOND	THIRD	FOURTH
A. INVESTMENT COST				
Construction	$82,000	$15,000	$19,000	$34,500
Equipment in place, including piping, fittings, electrical work and controls.....	241,000	84,000	90,500	270,000
Monitoring equipment in place.....	9,000			
Engineering design and inspection.....	66,400	19,800	21,900	60,900
Incidentals, overhead, fees, contingencies...	66,400	19,800	21,900	60,900
Land.....	66,000			
TOTAL INVESTMENT COST	$530,800	$138,600	$153,300	$426,300
B. OPERATION AND MAINTENANCE COST				
Labor and supervision.	$56,000	$14,000	$14,000	$14,000
Energy.....	5,500	900	1,300	3,100
Chemicals.....	130,000		1,800	31,500
Maintenance.....	46,480	13,860	15,330	42,630
Taxes and insurance...	15,924	4,158	4,599	12,789
Residual waste disposal.....	19,000			
Monitoring, analysis and reporting.....	15,000	7,500	7,500	7,500
TOTAL OPERATION AND MAINTENANCE COST	$287,904	$40,418	$44,529	$111,519
C. AMORTIZATION OF INVESTMENT COST	$75,622	$22,550	$24,941	$69,359
TOTAL ANNUAL COST	$363,526	$62,968	$69,470	$180,878

*First level represents the base cost of treatment system.
Other levels represent the incremental cost above base cost.

TABLE 15-18. MODEL PLANT TREATMENT COSTS

Subcategory ALUMINUM FLUORIDE — Type of Regulation BAT

Production 35,600 metric tons per year (39,249 tons per year)
101 metric tons per day (112 tons per day)
Waste water flow 1550 cubic meters per day.

	LEVEL OF TREATMENT*			
	FIRST	SECOND	THIRD	FOURTH
A. INVESTMENT COST				
Construction	$56,900	$15,000	$19,000	$34,000
Equipment in place, including piping, fittings, electrical work and controls.....	221,000	84,000	90,500	259,000
Monitoring equipment in place.....	9,000			
Engineering design and inspection.....	57,380	19,800	21,900	58,600
Incidentals, overhead, fees, contingencies...	57,380	19,800	21,900	58,600
Land.....	30,000			
TOTAL INVESTMENT COST	$431,660	$138,600	$153,300	$410,200
B. OPERATION AND MAINTENANCE COST				
Labor and supervision.	$56,000	$14,000	$14,000	$14,000
Energy.....	5,500	900	1,300	3,100
Chemicals.....	60,000		1,800	14,610
Maintenance.....	40,166	13,860	15,330	41,020
Taxes and insurance...	12,949	4,158	4,599	12,306
Residual waste disposal.....	9,000			
Monitoring, analysis and reporting.....	15,000	7,500	7,500	7,500
TOTAL OPERATION AND MAINTENANCE COST	$198,615	$40,418	$44,529	$92,536
C. AMORTIZATION OF INVESTMENT COST	$65,350	$22,550	$24,941	$66,739
TOTAL ANNUAL COST	$263,965	$62,968	$69,470	$159,275

*First level represents the base cost of treatment system.
Other levels represent the incremental cost above base cost.

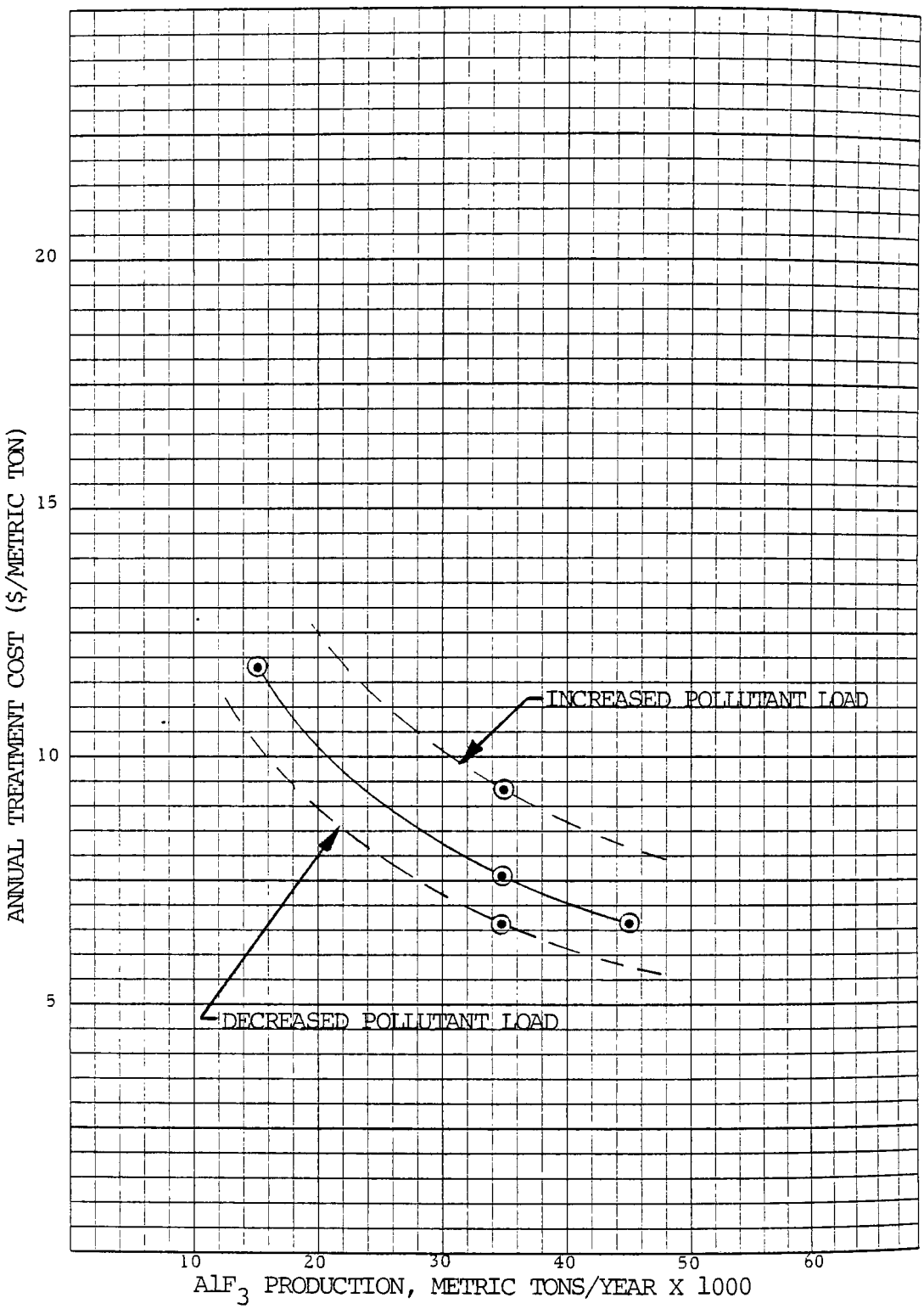

Figure 15-11. Effect of variation of pollutant load on treatment cost at level 1 technology

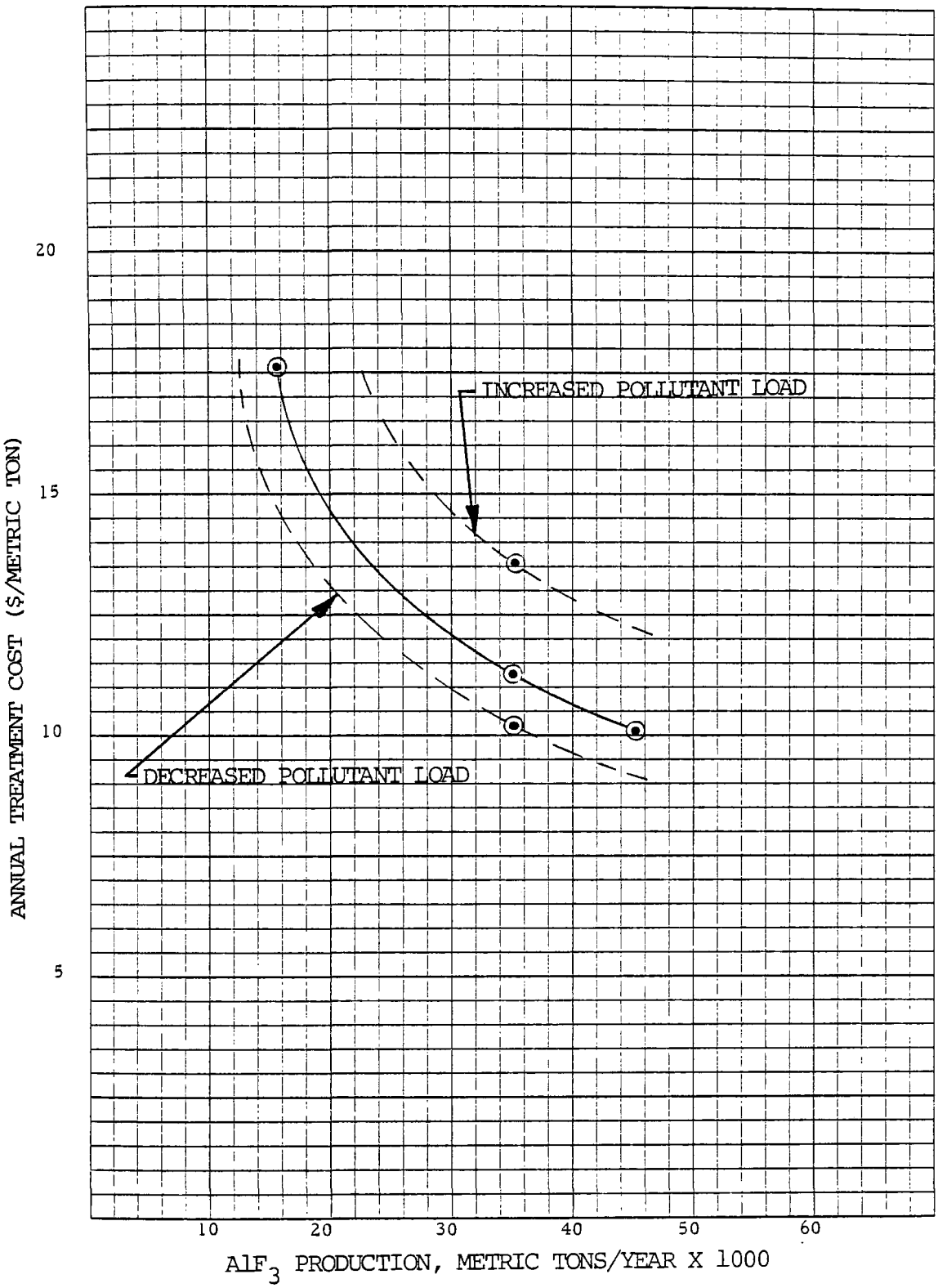

Figure 15-12. Effect of variation of pollutant load on treatment cost at level 4 technology

TABLE 15-19. MODEL PLANT TREATMENT COSTS

Subcategory ALUMINUM FLUORIDE — Type of Regulation BAT

Production 35,600 metric tons per year (39,249 tons per year)
101 metric tons per day (112 tons per day)

Waste water flow 2203 cubic meters per day.

	LEVEL OF TREATMENT*			
	FIRST	SECOND	THIRD	FOURTH
A. INVESTMENT COST				
Construction	$66,100	$21,000	$25,000	$43,500
Equipment in place, including piping, fittings, electrical work and controls.....	256,000	117,600	124,000	321,000
Monitoring equipment in place.....	9,000			
Engineering design and inspection.....	66,220	27,720	29,800	72,900
Incidentals, overhead, fees, contingencies...	66,220	27,720	29,800	72,900
Land.....	42,000			
TOTAL INVESTMENT COST	$505,540	$194,040	$208,600	$510,300
B. OPERATION AND MAINTENANCE COST				
Labor and supervision.	$56,000	$14,000	$14,000	$14,000
Energy.....	7,400	1,500	1,900	4,700
Chemicals.....	80,000		1,800	18,800
Maintenance.....	46,354	19,404	20,860	51,030
Taxes and insurance...	15,166	5,821	6,258	15,309
Residual waste disposal.....	12,500			
Monitoring, analysis and reporting.....	15,000	7,500	7,500	7,500
TOTAL OPERATION AND MAINTENANCE COST	$232,420	$48,225	$52,318	$111,339
C. AMORTIZATION OF INVESTMENT COST	$75,417	$31,570	$33,939	$83,025
TOTAL ANNUAL COST	$307,837	$79,795	$86,257	$194,364

*First level represents the base cost of treatment system.
Other levels represent the incremental cost above base cost.

TABLE 15-20. MODEL PLANT TREATMENT COSTS

Subcategory ALUMINUM FLUORIDE — Type of Regulation BAT

Production 35,600 metric tons per year (39,249 tons per year)
101 metric tons per day (112 tons per day)
Waste water flow 1064 cubic meters per day.

	LEVEL OF TREATMENT*			
	FIRST	SECOND	THIRD	FOURTH
A. INVESTMENT COST				
Construction	$63,600	$14,500	$18,500	$30,000
Equipment in place, including piping, fittings, electrical work and controls.....	237,000	70,300	76,000	206,000
Monitoring equipment in place.....	9,000			
Engineering design and inspection.....	61,920	16,960	18,900	47,200
Incidentals, overhead, fees, contingencies...	61,920	16,960	18,900	47,200
Land.....	42,000			
TOTAL INVESTMENT COST	$475,440	$118,720	$132,300	$330,400
B. OPERATION AND MAINTENANCE COST				
Labor and supervision.	$56,000	$14,000	$14,000	$14,000
Energy.....	5,500	600	900	2,500
Chemicals.....	80,000		1,800	18,800
Maintenance.....	43,344	11,872	13,230	33,040
Taxes and insurance...	14,263	3,561	3,969	9,912
Residual waste disposal.....	12,500			
Monitoring, analysis and reporting.....	15,000	7,500	7,500	7,500
TOTAL OPERATION AND MAINTENANCE COST	$226,607	$37,533	$41,399	$85,752
C. AMORTIZATION OF INVESTMENT COST	$70,520	$19,315	$21,525	$53,756
TOTAL ANNUAL COST	$297,127	$56,848	$62,924	$139,508

*First level represents the base cost of treatment system.
Other levels represent the incremental cost above base cost.

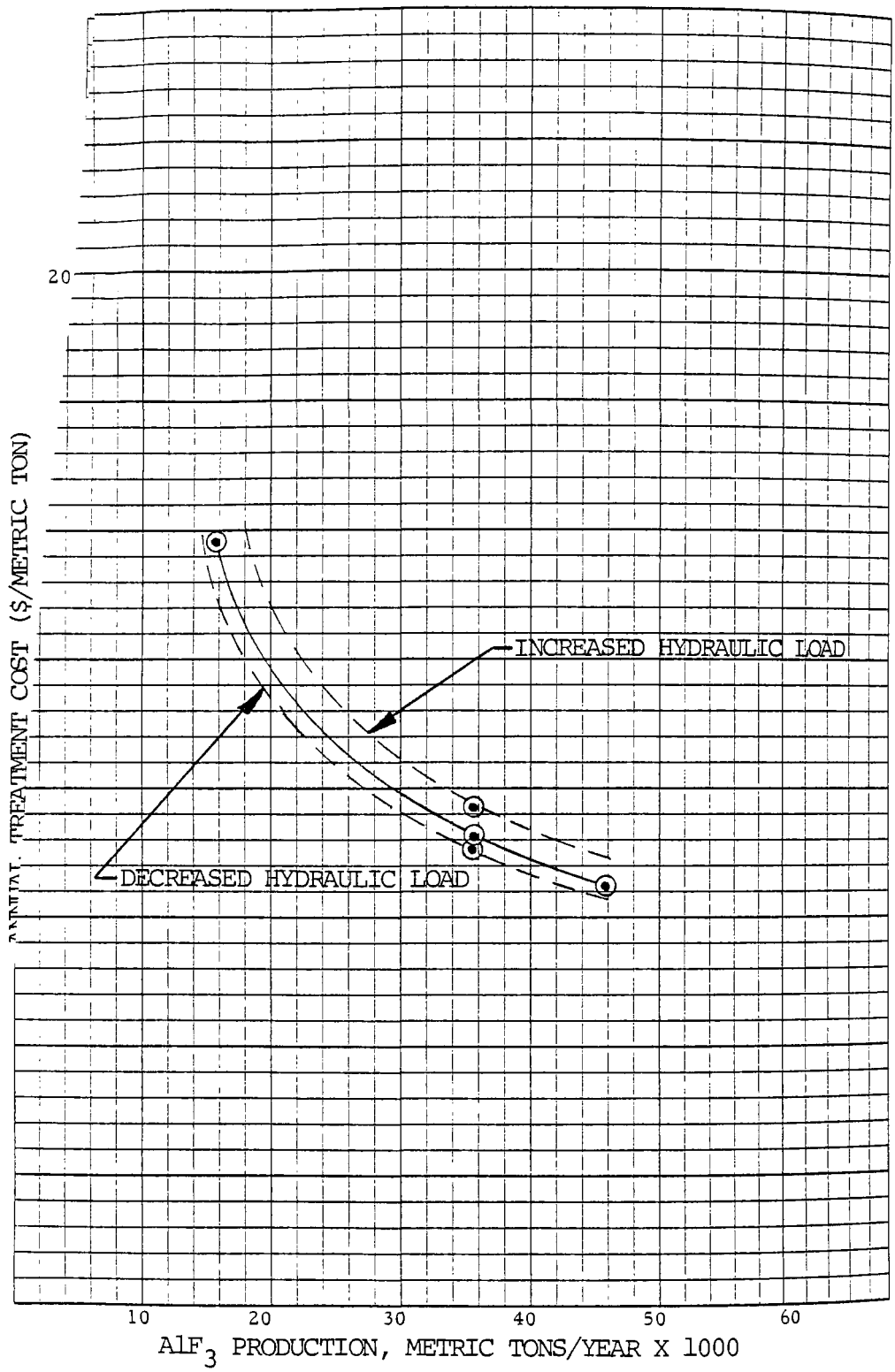

Figure 15-13. Effect of variation of hydraulic load on treatment cost at level 2 technology

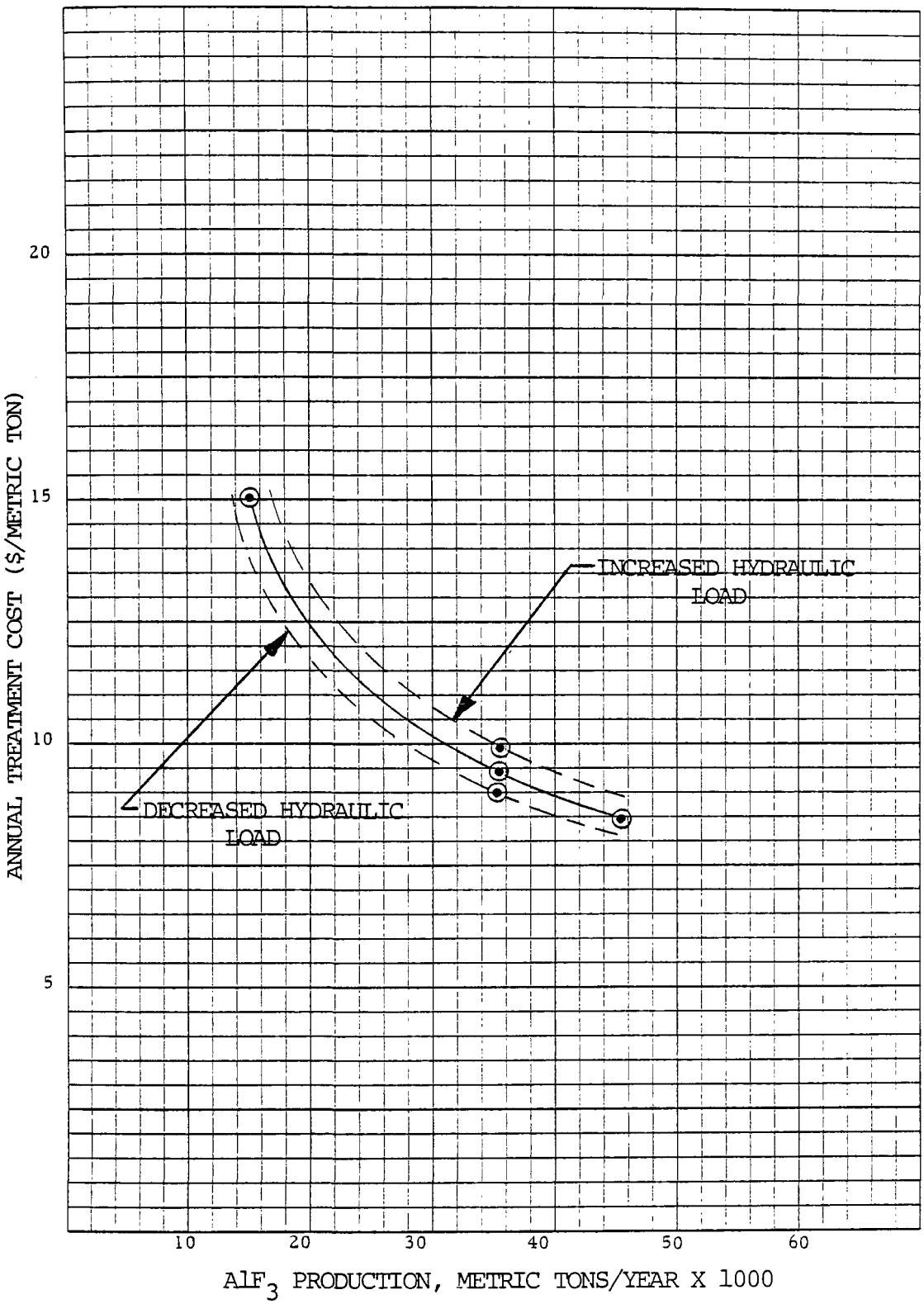

Figure 15-14. Effect of variation of hydraulic load on treatment cost at level 3 technology

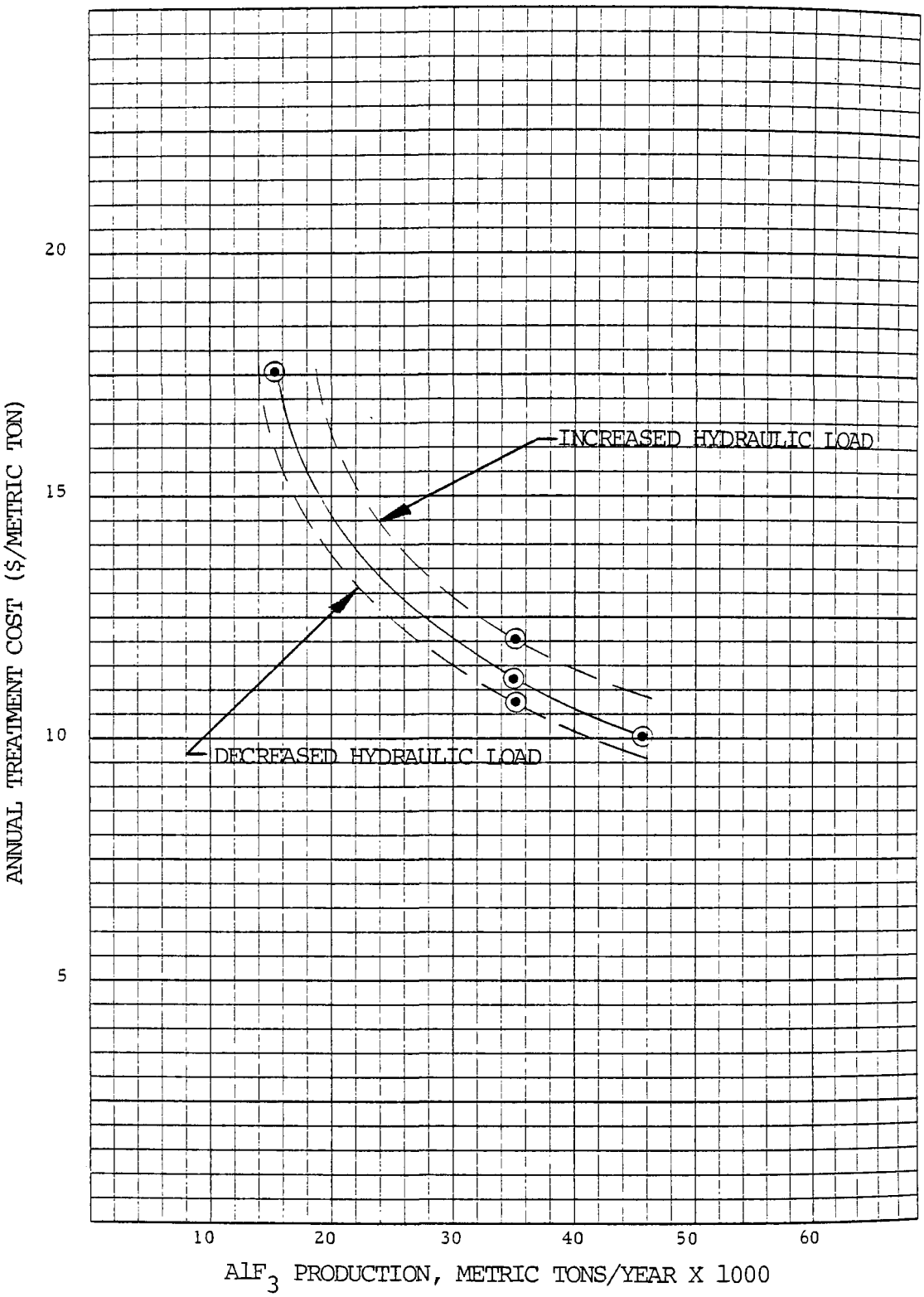

Figure 15-15. Effect of variation of hydraulic load on treatment cost at level 4 technology

TABLE 15-21 MODEL PLANT TREATMENT COSTS

Subcategory ALUMINUM FLUORIDE Type of Regulation BAT

	PRODUCTION (kkg/yr)	FLOW (m3/day)	Annual Treatment Costs/Metric ton of Product — LEVEL OF TREATMENT: FIRST $	SECOND $	THIRD $	FOURTH $
Annual Operation and Maintenance	15,900	690	10.02	2.28	2.47	4.33
	35,600	1,550	6.37	1.14	1.25	2.72
	45,800	1,990	5.74	1.02	1.12	2.57
	a 35,600	1,550	8.09	1.14	1.25	3.13
	b 35,600	1,550	5.58	1.14	1.25	2.60
	c 35,600	2,203	6.53	1.35	1.47	3.13
	d 35,600	1,064	6.37	1.05	1.16	2.41
Annual Amortization	15,900	690	3.45	1.12	1.26	2.76
	35,600	1,550	1.99	0.63	0.70	1.87
	45,800	1,990	1.82	0.65	0.70	1.79
	a 35,600	1,550	2.12	0.63	0.70	1.95
	b 35,600	1,550	1.84	0.63	0.70	1.87
	c 35,600	2,203	2.12	0.89	0.95	2.33
	d 35,600	1,064	1.98	0.54	0.60	1.51
Total Cost	15,900	690	13.47	3.40	3.73	7.09
	35,600	1,550	8.36	1.77	1.95	4.59
	45,800	1,990	7.56	1.67	1.82	4.36
	a 35,600	1,550	10.21	1.77	1.95	5.08
	b 35,600	1,550	7.41	1.77	1.95	4.47
	c 35,600	2,203	8.65	2.24	2.42	5.46
	d 35,600	1,064	8.35	1.60	1.77	3.92

a Increased pollutant load
b Decreased pollutant load
c Increased hydraulic load
d Decreased hydraulic load

Effects on annual costs due to higher and lower pollutant loads per unit of product for a medium level of production model plant were studied. At high pollutant loading, the annual cost at the first and fourth levels of treatment increased approximately by 25 and 35 percent respectively over the base case cost. At the second and third levels of treatment, annual costs per unit of product are the same as for the original model.

At lower pollutant loading, annual cost at first level of treatment decreased by 15 percent below the base case cost. At other levels, annual costs per unit of product are the same as for the original model.

Effects of annual costs due to higher and lower hydraulic load per unit of product for a medium level of production model indicated that at first level of treatment variation of hydraulic loads had an insignificant impact on annual cost compared to the original model annual cost.

In the second, third and fourth levels of treatment, at a higher hydraulic load, additional annual costs per unit of production increased by 24, 21, and 18 percent respectively over the original model costs.

At a lower hydraulic load, additional annual costs per unit of production decreased by 10 percent at second and third levels, and by 16 percent at the fourth level, compared to the original model cost.

SECTION 16

CHROME PIGMENTS INDUSTRY

16.1 ASSESSMENT OF THE WATER POLLUTION POTENTIAL

16.1.1 Industry Profile and Analytical Results

Chrome pigments are mostly sold in the merchant market, and consequently captive use is very low. They are extensively used in paints, printing ink, floor covering products and paper. They are also used in ceramics, cement, and asphalt roofing.

The industrial profile data for this subcategory is given in Table 16-1, while the existing regulations are in 16-2.

The priority pollutants found at significant concentrations in the raw waste during sampling at chrome pigments plants (209) were as follows:

	Maximum Concentration (ug/l)	
Pollutant	Screening	Verification (2 Plants)
Cadmium	79	1,250
Cyanide	360	8,200
Chromium	55000	349,000
Copper	7500	4,700
Lead	36000	69,000
Zinc	4100	273,000
Antimony	7700	1,475
Selenium	<10	28
Silver	7	20
Nickel	160	740
Phenol*	73	
Bis (2 ethylhexyl) Phthalate*	<0.1	

* from organic pigment process

A summary of daily and unit product raw waste loads for all plants sampled can be found in Table 16-3. Individual plant raw waste loads per unit product found in sampling can be found in

TABLE 16-1 - SUBCATEGORY PROFILE DATA SUMMARY

SUBCATEGORY	CHROME PIGMENTS
Total subcategory capacity rate	63,000 kkg/year
Total subcategory production rate	64,500 kkg/year
Number of plants in this subcategory	11
308 Data on file for	4
With total capacity of	
With total production of	19,660 kkg/year
Representing capacity	
Representing production	30 percent
Plant production range:	
Minimum	3,500 kkg/year
Maximum	8,800 kkg/year
Average production	6,300 kkg/year
Median production	6,400 kkg/year
Average capacity utilization	78 percent
Plant age range:	
Minimum	38 years
Maximum	60 years
Wastewater flow range:	
Minimum	360 cubic meters/day
Maximum	800 cubic meters/day
Volume per unit product:	
Minimum	32 cubic meters/kkg
Maximum	60 cubic meters/kkg

Sources of data are Stanford Research Institute, Directory of Chemical Producers, U.S.A., 1977, U.S. Department of Commerce, Current Industrial Reports, December 1977; Energy and Environmental Analysis, Inc.; Draft Report, "Preliminary Economic Assessment of Effluent Limitations in the Inorganic Chemical Industry."

TABLE 16-2 - EXISTING REGULATIONS - EFFLUENT LIMITATION GUIDELINES

SUBCATEGORY Chrome Pigments

SUBPART AH (40CFR 415.340, 5/22/75)

		STANDARDS					
		BPCTCA *		BATEA		NSPS	
Product Process	Para-meters	Max.[1] kg/kkg (mg/l)	Avg.[2] k/kkg (mg/l)	Max. k/kkg (mg/l)	Avg. k/kkg (mg/l)	Max. k/kkg (mg/l)	Avg. k/kkg (mg/l)
Chrome Pigment	TSS	5.1 (76.1)*	1.7 (25.4)				
	Cr (T)	0.10 (1.5)	0.034 (0.5)				
	Cr^{+6}	0.010 (0.2)	0.0034 (0.1)				
	Pb	0.42 (6.3)	0.14 (2.1)				
	Zn	0.72 (10.8)	0.27 (4.0)				
	CN	0.010 (1.5)	0.0034 (0.5)				
	CN (A)	0.10 (0.2)	0.034 (0.1)				
	Fe	0.72 (10.8)	0.27 (4.0)				

*Sections 415.340, 415.341, and 415.342 were revoked by the Agency (41 FR 51601, November 23, 1976).

[1]Max. = Maximum of any one day.

[2]Avg. = Average of daily values for thirty consecutive days shall not exceed.

* flow basis 67,000 l/kkg.

TABLE 16-3. SUMMARY OF RAW WASTE LOADINGS FOUND IN SCREENING AND VERIFICATION SAMPLING

SUBCATEGORY CHROME PIGMENTS

Pollutant	Loadings						
	kg/day			kg/kkg			No. of Plants Averaged
	Minimum	Average	Maximum	Minimum	Average	Maximum	
Priority							
Antimony, Sb	5.90	51.7	98.0	0.14	0.87	1.61	2
Cadmium, Cd	0.87	5.44	10.0	0.02	0.16	0.09	2
Chromium, Cr	698	1016	1333	11.5	21.5	30.8	2
Copper, Cu	6.08	50.8	95.2	0.14	0.86	1.58	2
Lead, Pb	237	347	458	5.46	6.49	7.62	2
Nickel, Ni	1.38	1.71	2.03	0.032	0.0325	0.033	2
Zinc, Zn	52.2	381	712	0.86	8.63	16.4	2
Cyanide, CN	3.11	24.4	45.8	0.072	0.41	0.75	2
Organics							
Phenols		0.93			0.015		
Phenolics		8.80			0.14		
Conventional							
TSS		3049			70.4		
Iron, Fe		7.03			0.16		

Table 16-4.

Based on the total annual production and the average waste load generated per unit product, the estimated total priority pollutant raw waste loads generated each year for this subcategory are as follows:

Pollutant	Waste Load (kg/year)
Cadimum	10000
Chromium	1400000
Copper	55000
Lead	420000
Zinc	560000
Antimony	56000
Nickel	2100
Cyanide	26000

16.1.2 Process Waste Sources and Waste Water Treatment Data

General Process Description

Chrome pigments are a family of inorganic compounds containing chromium, lead, iron, molybdenum, and zinc used for pigments. They include chrome yellow, chrome orange, molybdate chrome orange, anhydrous and hydrous chromium oxide, zinc yellow and iron blues. At some plants the compounds are made in the same facility either simultaneously or sequentially depending on sales and market requirements. The general manufacturing process for each of the compounds is given below.

Chromium oxide - This pigment consists of two compounds, anhydrous and hydrated chrome oxide (Guigets Green). The amount of the anhydrous salt oxide produced is approximately ten times the amount of hydrated chromic produced. It is offered in a narrow range of shades from light yellowish to dark bluish green.

Anhydrous oxide is almost pure chromium oxide and the commercial grade consists of a minimum of 98.5 percent Cr203. It is prepared by calcination of sodium dichromate with sulfur or carbon according to the reactions given below:

$$Na_2Cr_2O_7 + S = Cr_2O_3 + Na_2SO_4 \qquad (1)$$

$$Na_2Cr_2O_7 + 2C = Cr_2O_3 + Na_2CO_3 + CO \qquad (2)$$

The use of sulfur as the reducing agent eliminates CO2, CO

TABLE 16-4. PRIORITY POLLUTANT RAW WASTE LOADS (in kg/kkg of Product)

SUBCATEGORY	CHROME PIGMENTS	
POLLUTANT	PLANT	
	#894	#002
Cyanide, Cn	0.754	0.072
Chromium, Cr	11.5	0.020
Cadmium, Cd	0.165	30.8
Copper, Cu	1.58	0.140
Lead, Pb	7.52	5.46
Zinc, An	0.855	16.4
Antimony, Sb	1.612	0.136
Nickel, Ni	0.0334	0.032
Phenols	0.0152	No data
Phenolics	0.1448	No data

and SO_2 emissions but increases the sulfate raw waste. In the manufacturing process using sulfur, the raw materials consisting of sodium dichromate and sulfur are mixed with water and the resultant solution is fed to a kiln. The material is heated and the reacted materials from the kiln are slurried with water, filtered, washed, dried, ground, screened, and packaged. The effluent gases from the kiln containing sulfur dioxide and sulfur trioxide are wet scrubbed before venting to the atmosphere.

A general process flow diagram of the preparation of anhydrous chrome oxide is given in Figure 16-1.

Hydrated chromium oxide, $Cr_2O_3\ 2H_2O$ or $Cr_2O(OH)_4$, also known as chromium hydrate and Guignets Green, is a brilliant bluish green. It is made by reacting sodium dichromate with boric acid as follows:

$$2Na_2Cr_2O_7 + 8H_3BO_3 = 2Cr_2O_3.2H_2O + 2Na_2B_4O_7 + 8H_2O + 3O_2 \quad (3)$$

The raw materials are blended in a mixer and then heated in an oven at about 550 degrees C. The reacted material is slurried with water and filtered. The filtered solids are washed with water, dried, ground, screened, and packaged. The filtrate and the wash water are treated with sulfuric acid to recover boric acid according to the reaction given below:

$$Na_2B_4O_7 + H_2SO_4 + 5H_2O = 4H_3BO_3 + Na_2SO_4 \quad (4)$$

A waste stream containing some boric acid and sodium sulfate leaves the boric acid unit. Figure 16-2 is a generalized flow diagram of the process.

<u>Chrome yellow and chrome orange</u> - Chrome yellow is one of the more important synthetic pigments. The chrome yellows cover the range of hues from light greenish yellow to reddish medium yellow and consist mainly of lead chromate. They are made by reacting sodium dichromate, caustic soda, and lead nitrate. The reactions are given as:

$$2HNO_3 + PbO = Pb(NO_3)_2 + H_2O \quad (5)$$

$$Na_2Cr_2O_7 + 2NaOH + 2Pb(NO_3)_2 = 2PbCrO_4 + 4NaNO_3 + H_2O \quad (6)$$

Lead chromate is formed as a precipitate during the reaction. It is filtered and treated with chemicals for development of desired specific pigment properties, dried, milled, and packaged. The filtrate from the filtration operation is sent to the waste water treatment facility. A flow diagram of the chrome yellow manufacturing process is shown in Figure 16-3.

<u>Molybdenum orange</u> - Molybdenum orange is made by the coprecipitation of lead chromate ($PbCrO_4$) and lead molybdate

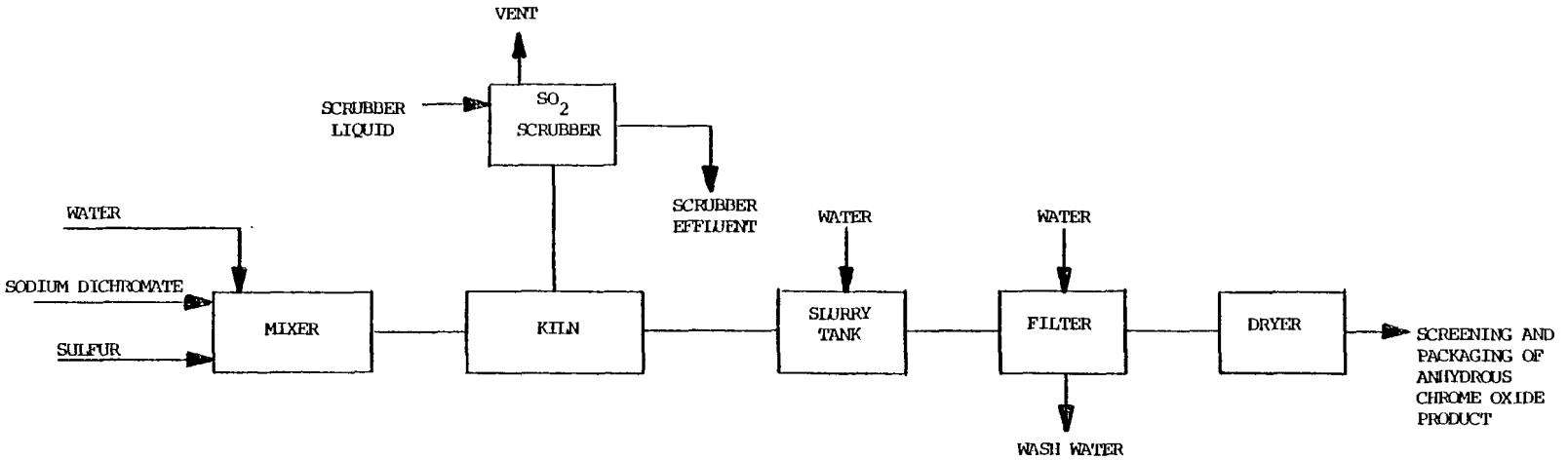

Figure 16-1. General process diagram for production of anhydrous chrome oxide.

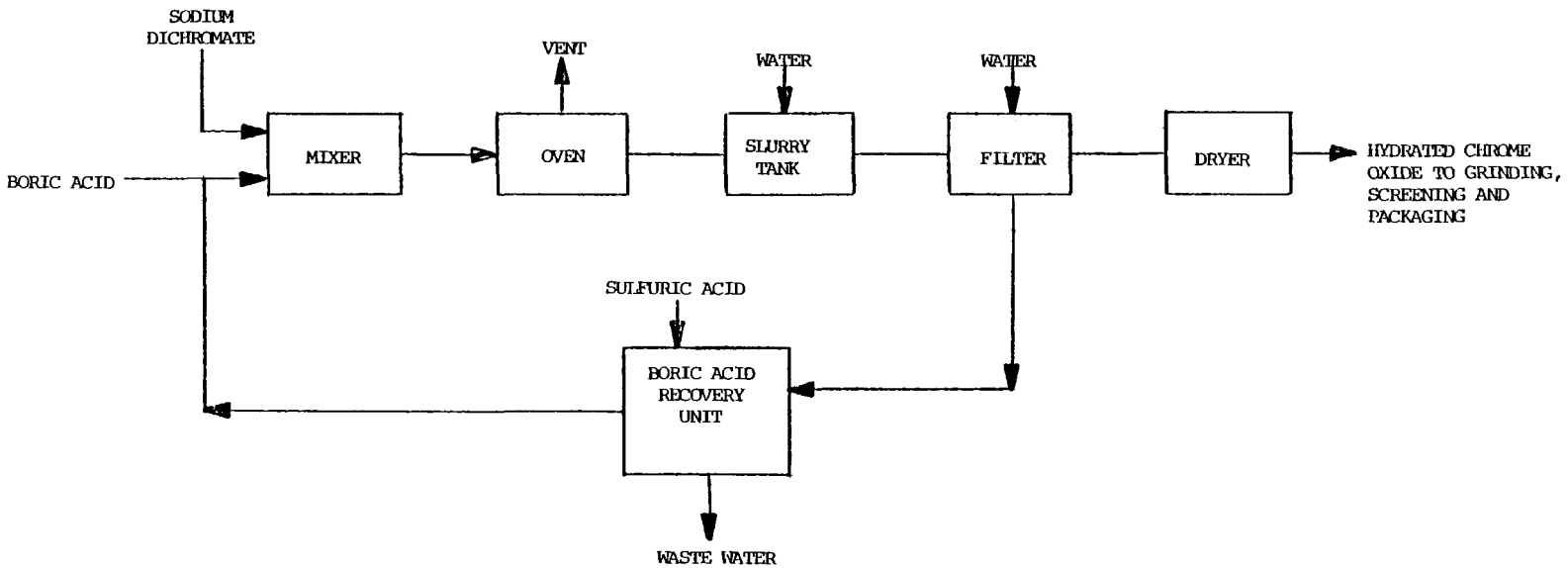

Figure 16-2. General process diagram for production of hydrated chromic oxide.

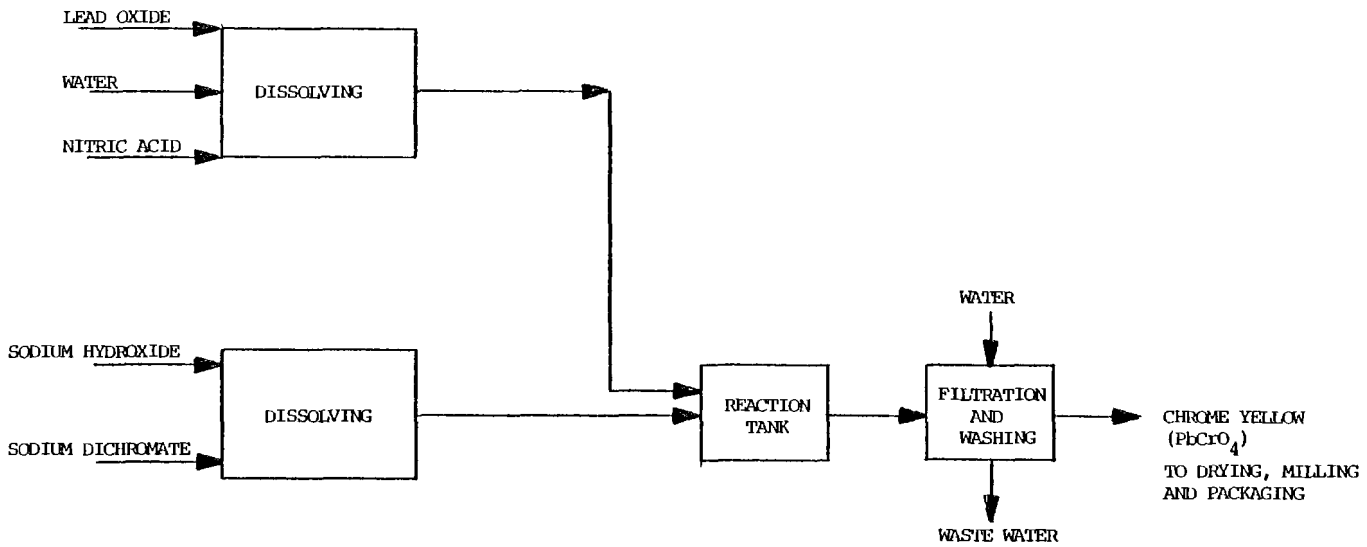

Figure 16-3. General process diagram for production of chrome yellow.

($PbMoO_4$). The resulting pigments are more brilliant than chrome oranges.

The process consists of dissolving molybdic oxide in aqueous sodium hydroxide and adding sodium chromate. The solution is mixed and reacted with a solution of lead nitrate. The precipitate from the reaction is filtered, washed, dried, milled and packaged. The filtrate, is sent to the treatment facility. The reactions can be given as follows:

$$MoO_3 + 2NaOH = Na_2MoO_4 + H_2O \quad (7)$$

$$PbO + 2HNO_3 = Pb(NO_3)_2 + H_2O \quad (8)$$

$$Na_2MoO_4 + Pb(NO_3)_2 = PbMoO_4 + 2\ NaNO_3 \quad (9)$$

$$Na_2CrO_4 + Pb(NO_3)_2 = PbCrO_4 + 2NaNO_3 \quad (10)$$

$$PbMoO_4 + PbCrO_4 = PbCrO_4.PbMoO_4 \quad (11)$$

A simplified flow diagram for the manufacture of molybdenum orange is given in Figure 16-4.

Chrome green - Chrome greens are a coprecipitate of chrome yellow and iron blues. They include a wide variety of hues from very light to very dark green. Iron blues are manufactured by reaction of aqueous solution of iron sulfate and ammonium sulfate with sodium hexacyanoferrate. The precipitate formed is separated and oxidized with sodium chlorate or sodium chromate to form iron blues ($Fe(NH_4)[Fe(CN)_6]$. Chrome green is produced by mechanically mixing chrome yellow and iron blue pigments in water. The coprecipitate formation of chrome green is given by:

$$PbCrO_4 + Fe(NH_4)[Fe(CN)_6] = PbCrO_4Fe(NH_4)[Fe(CN)_6] \quad (12)$$

Figure 16-5 gives a process flow diagram for the manufacture of chrome green.

Zinc yellow - Zinc yellow, also called zinc chromate, is a greenish yellow pigment. It is a complex compound of zinc, potassium, and chromium which has the approximate composition $4ZnO.K_2O.4CrO_3.3H_2O$. It is made by the reaction of zinc oxide, hydrochloric acid, sodium dichromate, and potassium chloride. Zinc yellow is formed as a precipitate and is filtered, washed, dried, milled, and packaged for sale. The reactions are given as:

$$2KCl + 2HCl + 2Na_2Cr_2O_7.H_2O = K_2Cr_4O_{13} + 4NaCl + 3H_2O \quad (13)$$

$$4ZnO + K_2Cr_4O_{13} + 3H_2O = 4ZnO.K_2O.4CrO_3.3H_2O \quad (14)$$

A general flow diagram of the manufacturing process is given

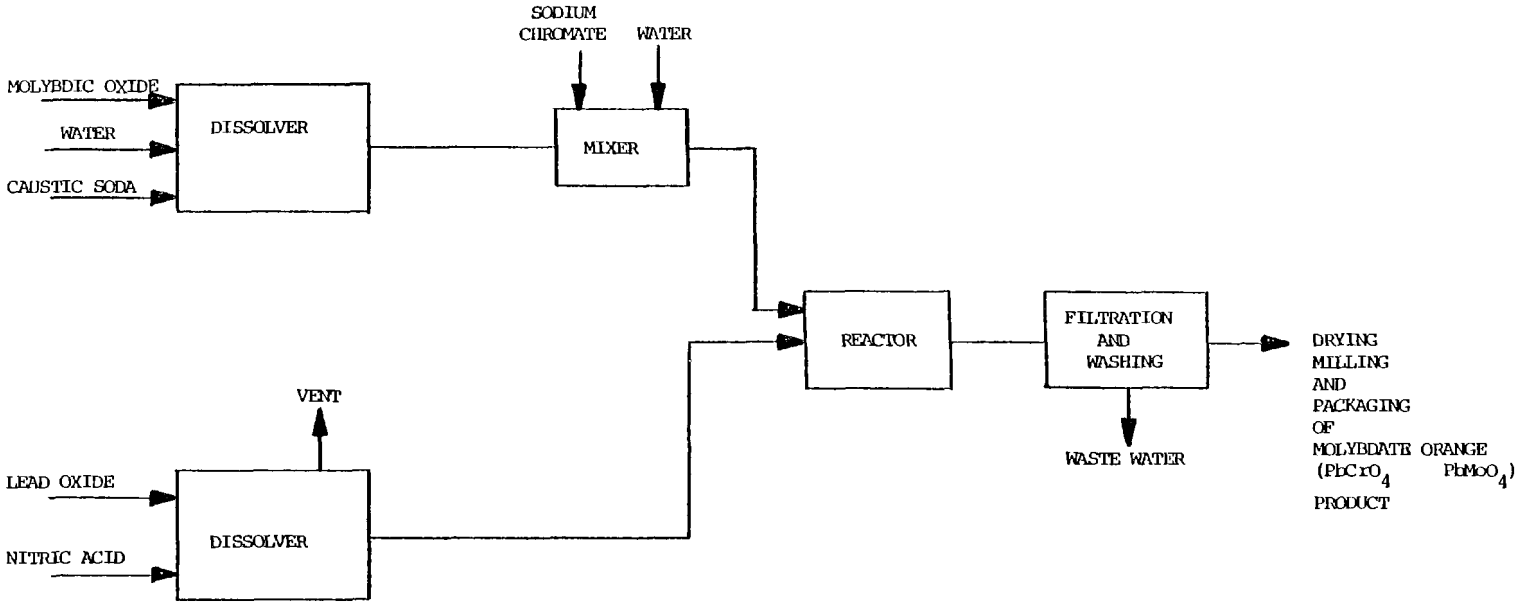

Figure 16-4. General process diagram for production of molybdate orange.

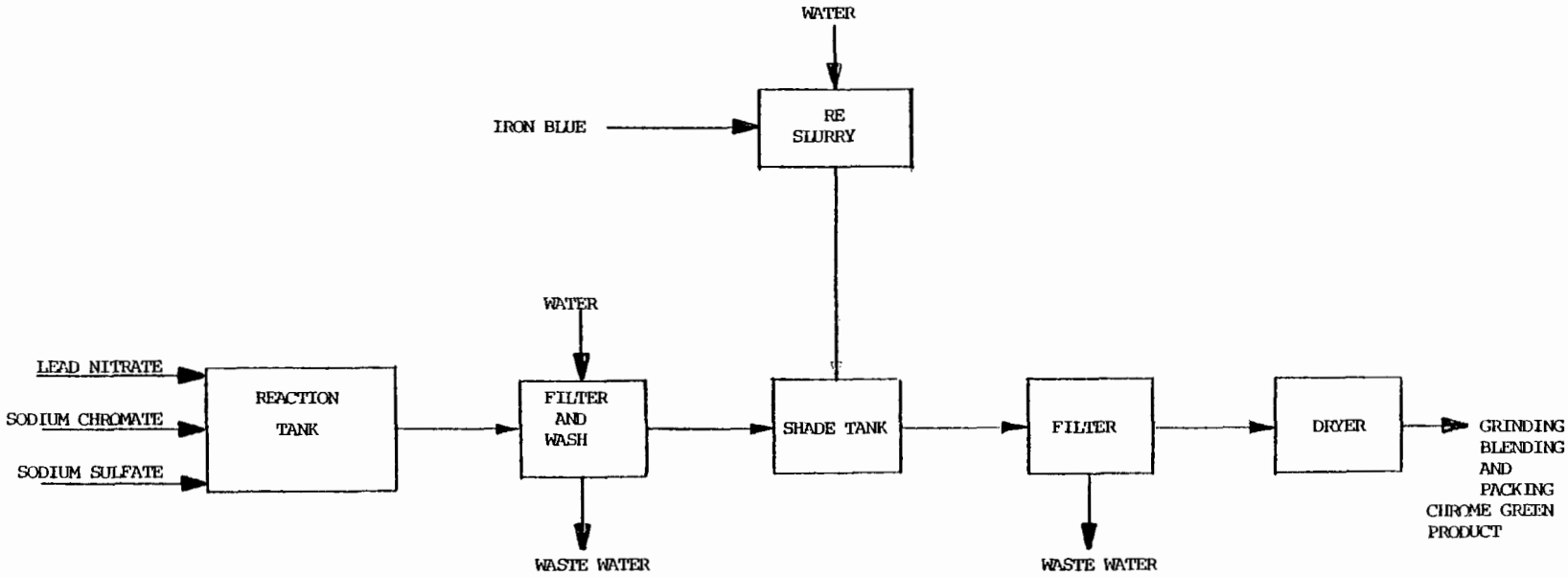

Figure 16-5. General process diagram for production of chrome green.

in Figure 16-6.

Water Use and Waste Source Inventories

Water uses - In the chrome pigment industry water is used for noncontact cooling, washing the precipitated product, and as boiler feed for steam generation. In some cases water is introduced into the reactor along with the raw materials.

In anhydrous and hydrated chrome oxide manufacture, water is used for slurrying of the reaction product and in scrubbing the reactor vent gases. Table 16-5 is a summary of water usage at different pigment plants in the chrome pigments subcategory.

WaSte sources - some plants produce different pigment products sequentially in the same process. At a few plants the different pigment products are manufactured concurrently and the waste waters combined and treated at a single facility. A generalized flow diagram applicable to all chrome pigment plants is given in Figure 16-7. The waste water sources are similar for all pigment products except that at chrome oxide plants an additional scrubber waste is generated. Table 16-6 gives the waste water flow data summary for several plants. The quantity of waste water and the pollutants vary for the different pigment products since the pollutants are dependent on the raw materials used. All the waste waters generated in the chrome pigments subcategory contain dissolved chromium and pigment particulates.

Additional pollutants that can be present are given below for each major pigment group.

Chrome yellow and chrome orange: The raw waste waters contain sodium acetate, sodium chloride, sodium nitrate, sodium sulfate, and lead salts.

Chromic oxide: The aqueous process effluent contains sodium sulfate. If boric acid is used in the preparation of hydrated chromic oxide then the waste water will contain sodium borate and boric acid.

Chrome yellow and chrome orange: Additional pollutants present in the raw waste water from chrome yellow and chrome orange manufacture include sodium acetate, sodium chloride, sodium nitrate, sodium sulfate and lead salts.

Molybdenum orange: Process waste effluents from the manufacture of molybdenum orange contain sodium chloride, sodium nitrate, sodium sulfate, chromium hydroxide, lead salts and silica.

Chrome green: The raw waste water contains sodium nitrate.

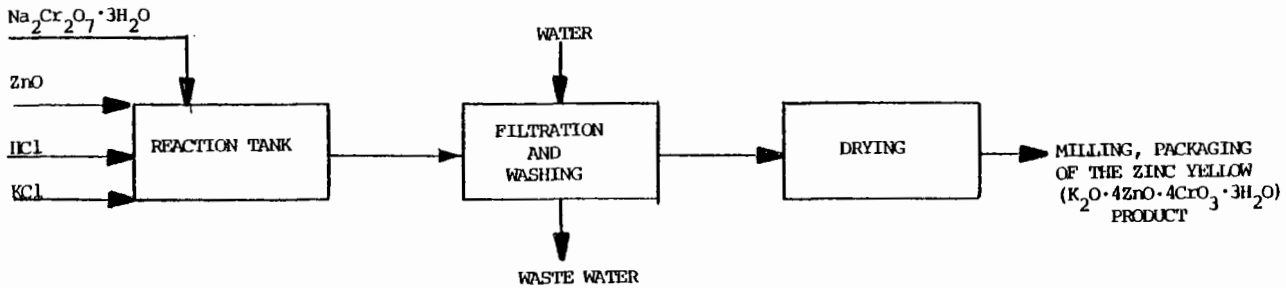

Figure 16-6. General process diagram for production of zinc yellow.

TABLE 16-5. WATER USAGE IN THE CHROME PIGMENTS SUBCATEGORY

Pigment	Plant	Water Usage, m^3/kkg of Product		
		Non-Contact Cooling	Consumed in Product	Boiler Feed
Chrome Yellow and Chrome Orange	#409	6.6	1.8	11
	#894	-	3.3	NA
	#002	3.1	1.0	NA
Molybdate Chrome Orange	#002	5.0	1.3	NA
	#409	0	8.4	3.5
	#894	0	3.5	NA
Zinc Yellow	#002	0	1.0	NA
	#409	6.3	0.8	4.2
Chrome Oxide	#257	0.35	4.2	1.7
	#894	4.7	2.0	NA

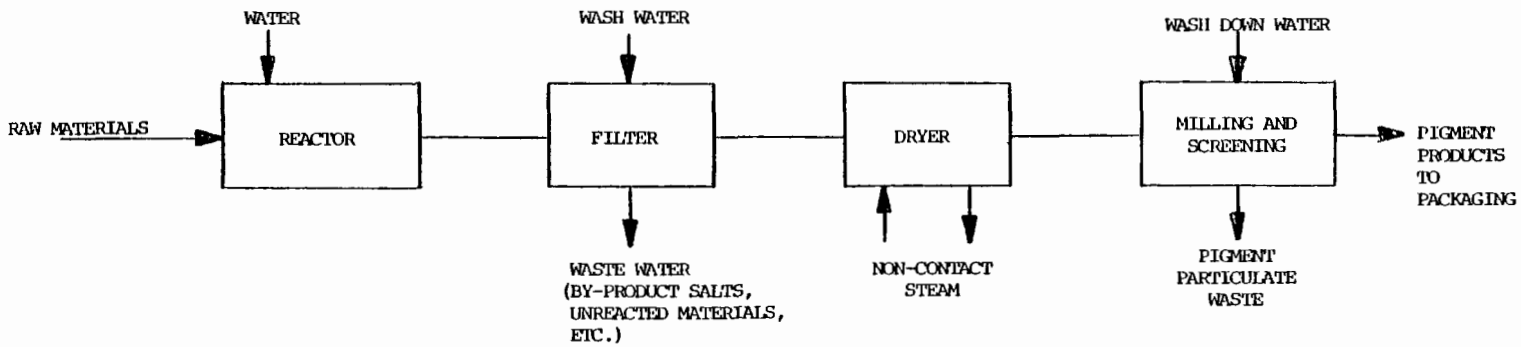

Figure 16-7. General process diagram for production of chrome pigment complexes.

TABLE 16-6. AQUEOUS PROCESS WASTE EFFLUENTS IN CHROME PIGMENTS SUBCATEGORY

Pigment	Plant	Process Waste Water, m^3/kkg of Product
Chrome Yellow and Chrome Orange	# 409	44
	# 894	120
	# 002	35
Molybdate Chrome Orange	# 002	31
	# 409	40
	# 894	110
Zinc Yellow	# 002	20
	# 409	19
Chrome Green	# 894	48
Chrome Oxide	# 257	29
	# 894	31

If iron blue is manufactured on site as part of the process for chrome green manufacture, the waste water also contains sodium chloride, ammonium sulfate, ferrous sulfate, sulfuric acid and iron blue pigment particulates.

Zinc yellow: The raw wastes contain hydrochloric acid, sodium chloride, potassium chloride, and soluble zinc salts.

As previously discussed, various plants make several chrome pigments sequentially or concurrently. Thus the unit hydraulic load going to the treatment facility will be an average of all the waste loads from the different processes. The raw waste from a complex plant may contain nearly all of the following substances: sodium acetate, sodium chloride, sodium nitrate, sodium sulfate, potassium chloride; lead, iron, and zinc salts, soluble chromium and pigment particulates.

Control and Treatment Practices

Plant #894 was visited during the screening phase of the program. This plant produces over 100 products including organic pigments such as copper phthalocyanine, and all the wastes are combined and treated together. Treatment consists of chromium VI reduction, equalization and neutralization, followed by clarification and filtration. Sulfur dioxide is added to reduce the hexavalent chromium to the trivalent state at a low pH prior to hydroxide precipitation. The backwash from the sand filters is recycled to the equalization tank, while the sludge from the clarifiers is passed through filter presses and then hauled to a landfill. The landfill has a bottom of two clay layers with gravel in between to allow the collection of leachate drainage. Any water from the sludge is trapped in the gravel layer, and is pumped out and returned to the plant for retreatment.

Figure 16-8 shows the treatment system flow diagram with the sampling points indicated. Table 16-7 gives waste flows and pollutant loadings.

Plant #002 was visited during the verification phase of the program. Normally this plant has a product mix of over 100 pigments most of which are produced in batch processes. At the time of sampling, zinc chromate was being produced by the continuous production unit. During an eight week cycle the continuous unit produces zinc chromate for one week and lead chromate for seven weeks. All process contact wastes are treated continuously. The waste is pumped to a treatment tank where SO_2 is added to convert hexavalent chromium to the trivalent state. The pH is adjusted to 8.5 and then the waste is passed through precoated filters followed by discharge to the sewer. Figure 16-9 shows the treatment flow diagram and sampling points. Table 16-8 shows the waste flows and pollutant loadings. At sample

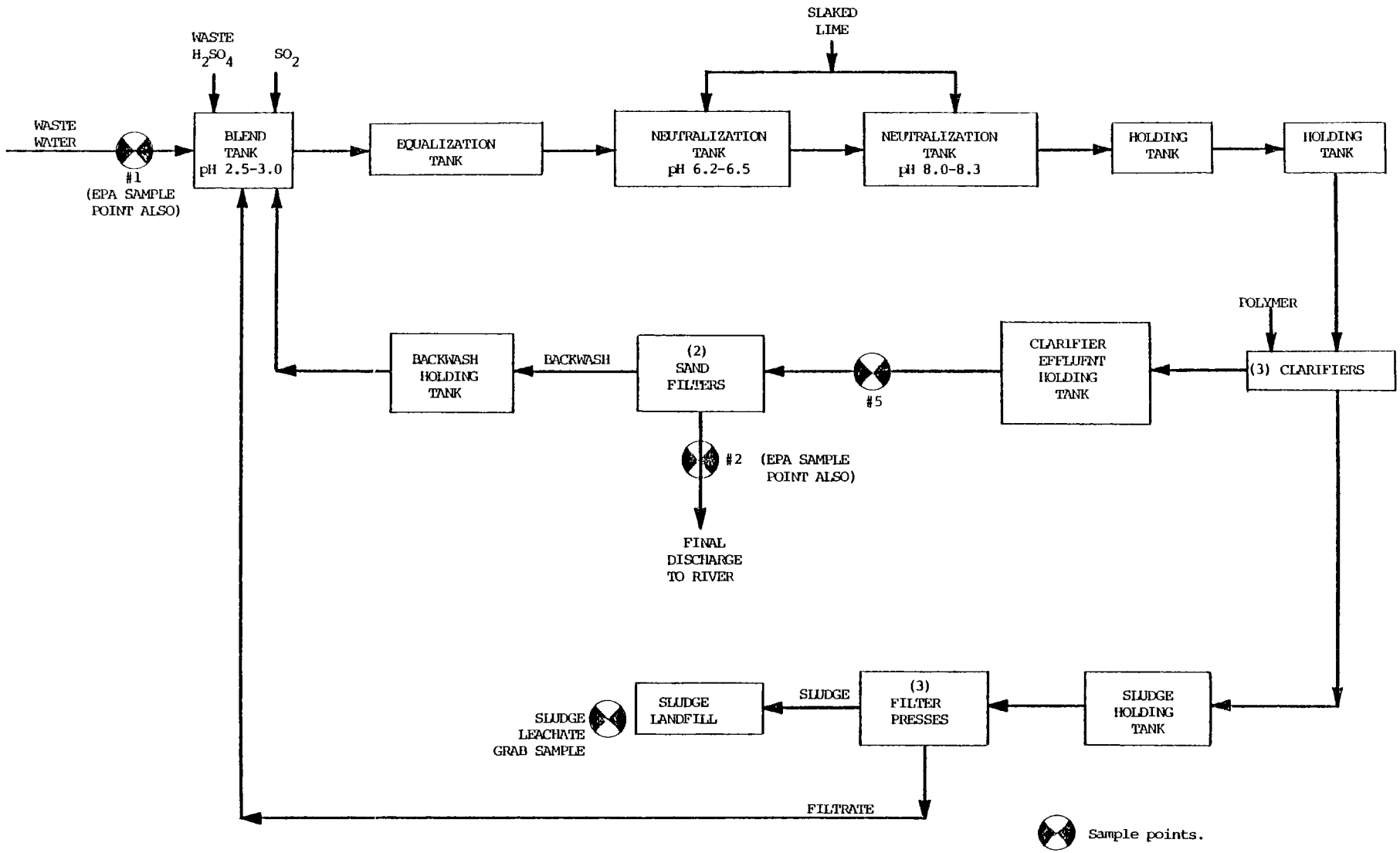

Figure 16-8. General waste water treatment process flow diagram at Plant #894 showing the sampling points. (Chrome Pigment Manufacture)

TABLE 16-7. FLOW AND POLLUTANT CONCENTRATION DATA OF THE SAMPLED WASTE STREAMS FOR PLANT #894 PRODUCING CHROME PIGMENTS

Stream	Flow m^3/kkg	TSS kg/kkg	Cr kg/kkg	Fe kg/kkg	Pb kg/kkg	Cu kg/kkg
Treatment Influent	100	78.1	7.93	4.9	1.52	0.356
Treatment Effluent	100	0.393	0.032	0.03	0.011	0.004
Leachate	NA	NA	0.258	0.39	0.164	0.008
Sand Filter Feed	100	1.1	0.060	0.10	0.068	0.0005

TABLE 16-8. FLOW AND POLLUTANT CONCENTRATION DATA OF THE SAMPLED WASTE STREAMS FOR PLANT #002 PRODUCING CHROME PIGMENTS

Stream	Flow m^3/kkg	TSS kg/kkg	Cr kg/kkg	Zn kg/kkg	Pb kg/kkg
Untreated Waste	85.6	59.8	26.25	4.64	13.94
Unfiltered Treated Waste	85.6	N.A.	11.14	0.128	10.02
Filtered Treated Waste	85.6	82.94	29.90	4.25	14.31

N.A. = Not Analyzed

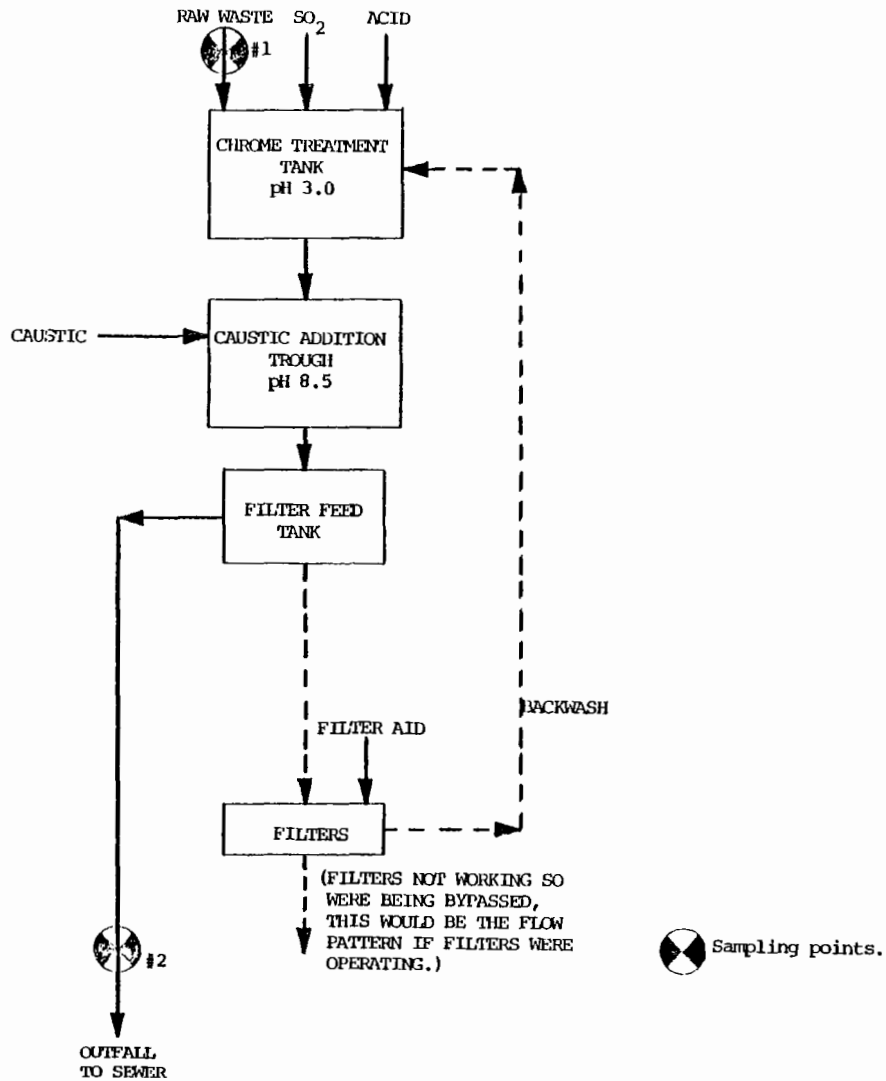

Figure 16-9. General waste water treatment process flow diagram at Plant #002 showing the sampling points. (Chrome Pigment Manufacture)

point #2, half the sample was filtered through a glass fiber filter on a Buechner funnel to simulate the filtration process which was being bypassed at the time of sampling. Analyses were carried out done on the filtered and unfiltered samples in order to make possible a comparison of the total and dissolved concentrations.

At Plant #464, the chrome pigment process wastes are sent to a settling basin and an discharged to a sewer.

Plant #502 discharges its wastes directly to the sewer.

At Plant #409, the waste waters from the zinc yellow process plant are collected and passed through two ion exchange columns to recover chromate values which are returned to the process. The effluent from the ion-exchanger is treated with soda ash to precipitate zinc salts as zinc carbonate, which is filtered to recover zinc carbonate.

At one plant the waste waters from the zinc yellow process are acidified to dissolve the hexavalent chromium and then treated with sulfur dioxide to reduce the hexavalent chromium to the trivalent state. The solution is then reacted with caustic soda for metal precipitation. The reacted solution is filtered and the filtrate is discharged (52).

At another chrome pigment manufacturing complex, plant waste waters are collected and treated with sulfur dioxide in acid solution followed by lime addition in two stages to give a pH in the range 7.5-8.5. The metals are precipitated by the treatment. The slurry is further treated with sodium sulfide for additional precipitation of metals. The reacted solution is flocculated and sent to a clarifier. The overflow from the clarifier is passed through mixed media filters before discharge. The clarifier underflow is filtered in a plate and frame filtration unit and the solids are land filled. The filtrate is returned to the clarifier (52).

Best Management Practices and Technology Transfer Options

1. All storm water and surface area runoff from the plant site can be collected and sent to the treatment facility.

2. If the solids from the treatment plant are disposed of on-site provision should be made to control leachates and permeates. It is possible to monitor the metal concentrations and when concentrations approach predetermined limits, the leachate can be pumped back to the treatment system for further treatment.

Model Plant and BPT Level Treatment System Specifications

The BPT treatment system for chrome pigment wastes consists of:

A. Acifidification in a recirculated holding tank.

B. Reduction with sulfur dioxide to convert hexavalent chromium to its trivalent state.

C. Addition of caustic soda to precipitate chromium and other heavy metals.

D. Polymer-assisted clarification to settle metallic hydroxides.

E. Filtration to remove fine suspended matter.

Production in the industry ranges from 3500 kkg/yr to 20,000 kkg/yr. For the model plant four production rates were chosen: 1,500, 4,000, 6,000 and 18,000 kkg/yr. These cover the entire range of production rates. Most plants produce many chrome pigment products on a continuous basis so the operational mode selected was continuous and assumed to run 350 days per year. Chrome pigments are usually produced in integrated facilities with the necessary flexibility to shift from one product or combination of products to another. The model plant was selected to reflect this type of complexity. The observed waste flows varied from 19 m3/kkg to 150 m3/kkg. The value of 105 m3/kkg was selected as the model plant waste flow.

Pollutant loads - For the model plants, the loadings are based on screening and verification plant data as well as loadings presented in previous EPA documents. The loadings used for the model plant were 8.5 kg chromates as chromium per kkg of product and 50 kg suspended solids per kkg of product.

Chemicals required - The calculated quantity of caustic soda required to raise the pH to 8.5 is 400 mg/l. The unit caustic soda requirement 45 kg/kkg of product. Sulfuric acid and sulfur dioxide are used at 67.5 and 40.75 kg per kg of chrome pigment respectively.

Generation of Solids Sludge solids are composed of suspended solids (given above as 50 kg/kkg) and the solids generated as reaction products. Considering chromium hydroxide as the major insoluble reaction product, the unit quantity is 17 kg/kkg of product. The total solids to be hauled to a secure landfill is 67 kg/kkg of product.

16.2 TECHNOLOGY BASED POLLUTION ABATEMENT

16.2.1 Advanced Level Treatment Applications

Priority Pollutants to be Controlled

The priority pollutants found in significant amounts are the heavy metals contained in the chromium ore, including chromium, antimony, copper, cadmium, nickel, lead, and zinc. In some raw wastes, ferro- and ferricyanide are found, presumably from metal complexing steps in the ore processing and the manufacture of iron blues. These complex cyanides may pass through the model treatment processes and could slowly revert to simple cyanide ions.

Removal Technologies Available

All of the common heavy metals (except hexavalent chromium) found in chrome pigment wastes will be precipitated by alkaline substances such as lime or caustic soda, although the optimum pH may differ for each metal. Reaction with sulfide compounds such as sodium bisulfide will precipitate the same metals, except in a less pH-dependent manner and, with the exception of chromium, to lower concentrations. Chromium in its hexavalent form can be reduced to its trivalent form and then precipitated as chromium hydroxide at a pH above 10.

Technology to be Applied at Each Level

BPT (Level 1) - Incoming wastes are acidified and reduced prior to alkaline precipitation. Settling and filtration are used to remove suspended solids.

Level 2 - For better separation of the trace metals, sulfide precipitation is incorporated ahead of the BPT dual media filter.

Flow Diagrams

Level 1 Figure 16-10

Level 2 Figure 16-11

Equipment Functions - In both levels, the incoming wastes are acidified in a holding tank and then treated with sulfur dioxide solution in a reactor to convert hexavalent chromium to trivalent chromium. Caustic soda is added as a precipitant and

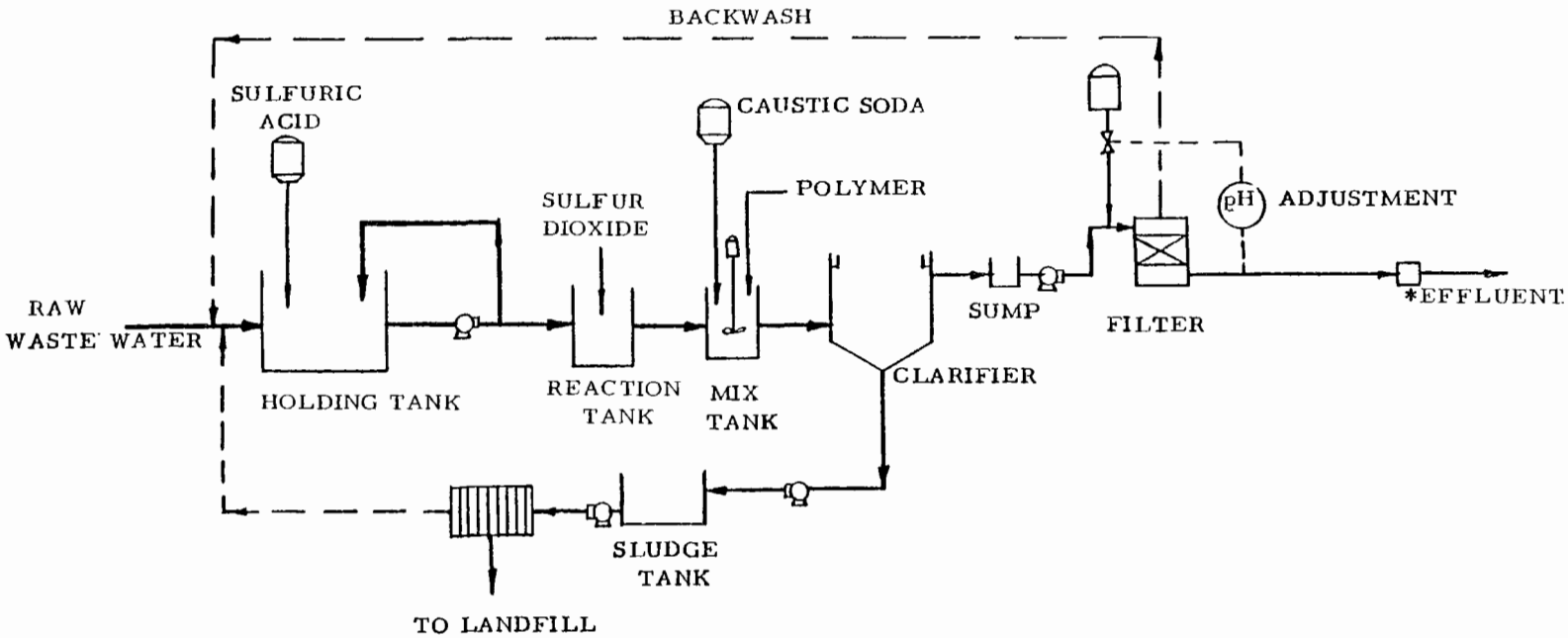

*Includes flow monitoring, pH monitoring and sampler.

Figure 16-10. Waste water treatment Level 1 for chrome pigments.

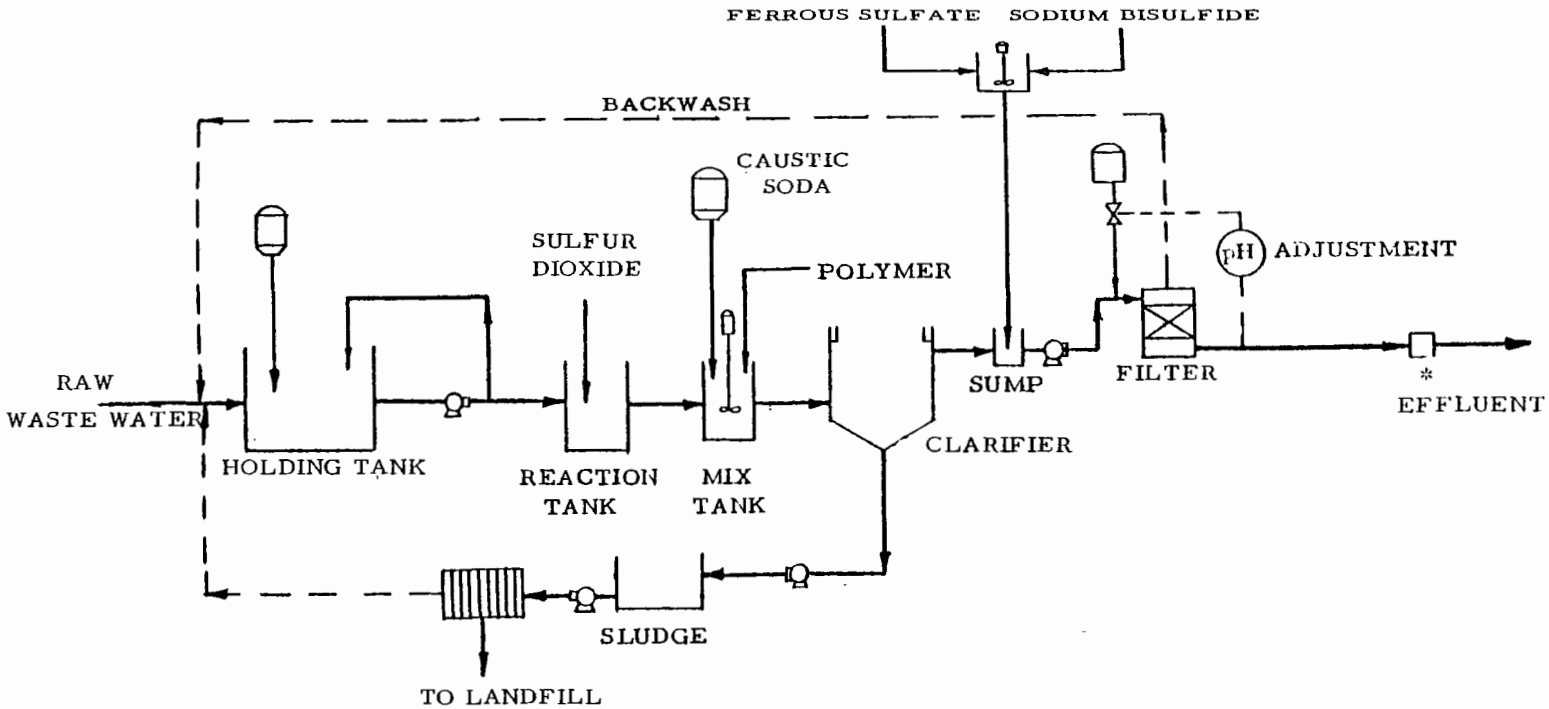

*Includes flow monitoring, pH monitoring and sampler.

Figure 16-11. Waste water treatment Level 2 for chrome pigments.

polymer is added to help settle the heavy metal hydroxides in a clarifier. The settled effluent is then filtered in a dual media filter and discharged after pH adjustment to the range 6 to 9. In Level 2, ferrous sulfide is added ahead of the dual media filter, for more effective precipitation of all the residual heavy metals, including antimony. As in Level 1, the filter effluent is adjusted to a pH between 6 and 9 before discharge.

Chemicals and Handling - Sulfuric acid and caustic soda solutions are common industrial chemicals which are readily handled with conventional liquid feeding equipment. Sulfur dioxide is received as a compressed gas which is dissolved in water by a modified gas chlorinator and fed to the reactor to maintain consistent reducing conditions. Polymer is fed by a standard package of holding tank, mixer and feeder. With normal precautions, there are no unusual hazards in handling chemicals for treatment of chrome pigment wastes.

Separation and Disposal of Solids - Solids from the clarifier, including recirculated filter backwash solids, are dewatered in a filter press and hauled to a chemical landfill. Sludge filtrate is returned to the influent holding tank.

Monitoring Requirements - Internal process monitoring consists of maintaining proper pH levels in the holding tank and final effluent, using conventional field equipment. A reducing environment is maintained in the reactor, using an oxidation-reduction potential instrument and/or the analysis for excess SO_2. Periodic effluent analyses for chromium and the trace heavy metals should be made on composite samples by atomic absorption methods, for official reporting purposes. Sulfide monitoring is unnecessary because dissolved sulfides should not exist in the presence of excess ferrous iron and oxygen.

16.2.2 Estimated Performance of BPT Systems

Pollutants previously regulated in this subcategory include suspended solids, hexavalent chromium, total chromium, lead, and zinc. Where iron blues are manufactured, iron, total cyanide and oxidizable cyanide are regulated. Raw waste priority pollutants found in significant concentrations during screening and verification sampling were presented earlier. Selected pollutants which may require regulation in addition to those listed above include antimony, cadmium, copper and nickel.

Waste water treatment at chrome pigment facilities ranges from simple settling and discharge to chemical reduction, precipitation and filtration. One facility uses ion exchange for treating wastes from a single product.

At Plant #894, a complex facility also producing organic pigments, treatment consists of equalization, reduction of hexavalent chromium, lime addition to precipitate metals, sedimentation, biological oxidation and filtration prior to discharge. Table 16-9 presents effluent monitoring and verification sampling results from this plant.

At Plant #002, another complex facility, waste water treatment consists of reduction of hexavalent chromium, neutralization with caustic, and filtration prior to discharge to a POTW. During verification sampling, the treatment system was not operating efficiently so analytical results were inconclusive.

BPT technology has been specified in Section 8 as reduction of hexavalent chromium, hydroxide precipitation of metals, clarification, and filtration for suspended solids removal. Important to treatment efficiency is sufficient equalization capacity to control waste variations and surges.

Base Level Performance Characteristics for BPT Pollutant Removal

Based on data presented in Table 16-9 and on the discussion of the reduction of hexavalent chromium with sulfur dioxide and other metals with hydroxide precipitation, achievable treated effluent quality with implementation of BPT technology is presented in Table 16-10.

Base Level Performance Characteristics for Priority Pollutant Removal

Additional priority pollutant metals found in chrome pigments raw waste were antimony, cadmium, copper and nickel. Based on verification sampling results shown in Table 16-9 and on the hydroxide treatability discussion in Section 8, implementation of BPT technology will achieve the treated effluent quality presented in Table 16-10.

Pretreatment Applications

Several chrome pigment plants discharge waste water to POTWs and removal of incompatible heavy metal pollutants is necessary.

BPT technology for pretreatment of chrome pigments waste waters is recommended.

TABLE 16-9. MONITORING AND VERIFICATION SAMPLING OF CHROME PIGMENTS PLANT #894

Verification Sampling:

Pollutant	Influent		Effluent	
	mg/l	kg/kkg	mg/l	kg/kkg
Avg Flow (m^3/kkg)	153			
Total Suspended Solids, TSS	780	78	3.9	0.39
Chromium, Cr	78	7.8	0.32	0.032
Chromium VI, Cr^{+6}	<0.01	<0.001	<0.03	<0.003
Iron, Fe	49	4.9	0.30	0.03
Lead, Pb	15.2	1.52	0.11	0.011
Zinc, Zn	4.2	0.42	0.058	0.0058
Cyanide, CN	5.1	0.51	<0.066	<0.0066
Cyanide (Free), CN_A	<0.94	<0.094	<0.011	<0.0011
Antimony, Sb	0.74	0.074	0.30	0.030
Cadmium, Cd	0.90	0.090	0.0084	0.00084
Copper, Cu	3.56	0.36	0.04	0.004
Nickel, Ni	0.017	0.0017	<0.024	<0.0024

Monitoring Data - Treated Effluent

	Avg	30 day Avg	Waste Load (Avg)
	Concentration mg/l		kg/kkg
Total Suspended Solids, TSS	11.2	23.5	1.92
Chromium VI, Cr^{+6}	0.11	0.3	0.018
Chromium, Cr	0.44	0.73	0.074
Copper, Cu	0.13	0.25	0.023
Lead, Pb	0.41	0.87	0.069
Zinc, Zn	0.044	0.075	0.0072
Cyanide (Free), CN_A	< 0.012	0.044	0.0019
Cyanide (Total), CN	0.12	0.31	0.019
Arsenic	0.08	0.16	0.0125
Cadmium	0.08	0.12	0.013
Mercury	< 0.001	0.0017	0.00007

TABLE 16-10 CONTROL PARAMETER LIMITATIONS
SUBCATEGORY: Chrome Pigments
Level of Treatment: 1
Waste Water Flow: 100 m3/kkg

Pollutant	Subcategory Performance (mg/l)	(1) VFR	Quality Limit (mg/l)		Emission Limit (kg/kkg)	
			30 day Aver	24 hr Max	30 day Aver	24 hr Max
BPT Pollutants:						
Total Suspended Solids, TSS	22	2.0	15	30	1.5	3.0
Total Chromium, Cr	0.73	3.0	1.0	3.0	0.1	0.3
Hexavalent Chromium, Cr+6	0.30	3.0	0.2	0.6	0.02	0.06
Iron, Fe	0.3 (2)	2.0	1.0	2.0	0.1	0.2
Lead, Pb	0.87	2.0	0.8	1.6	0.08	0.16
Zinc, Zn	0.07	2.0	0.4	0.8	0.04	0.08
Cyanide, CN	0.31	4.0	0.5	2.0	0.05	0.2
Oxidizable Cyanide, CN(A)	0.04	4.0	0.05	0.2	0.005	0.02
Proposed Priority Pollutants						
Copper, Cu	0.25	2.0	0.3	0.6	0.03	0.06
Nickel, Ni	0.05 (2)	2.0	0.1	0.2	0.01	0.02

(1) - VFR: ratio of the 24 hour variability factor to the 30 day variability factor.

(2) - Verification Sampling

Response to Remand Issues

Major remand issues of BPT limitations in this subcategory were the following:

1. The accuracy and reliablity of the analytical method for hexavalent chromium in chrome pigments waste waters and the possible deletion of hexavalent chromium in favor of total chromium as a control parameter. Industry has shown that certain waste constituents can cause a reducing environment which interferes in the analysis of hexavalent chromiun leading to low results. Industry has recommended an alternative analytical technique which has yet to be accepted. The questions regarding the present analytical method need to be resolved. However, the high toxicity of hexavalent chromium necessitates the regulation and control of this pollutant.

2. The treatability of particular pollutants found in the raw waste loads, including the achievable levels with mixed effluent streams. Industry has questioned the transfer of technology from the electroplating industry. The achievable effluent quality presented above is based on available data on the treatability of mixed wastes and takes into account the variability of wastes encountered in this subcategory.

16.2.3 Estimated Performance of Advanced Level Systems

Advanced Level Performance Estimates for BPT and Priority Pollutant Removal

Table 16-11 presents estimates achievable effluent quality through implementation of this advanced technology.

New Source Applications

Following examination of treatment technologies applicable to new chrome pigment facilities, it has been determined that effluent quality achievable through the implementation of the above advanced technology is appropriate for NSPS.

16.2.4 Cost Estimates

Discussion

Cost estimates for models having four different production rates and two levels of treatment are presented in Tables 16-12, 16-13, 16-14, and 16-15. Annual treatment cost as a function of

TABLE 16-11 CONTROL PARAMETER LIMITATIONS
SUBCATEGORY: Chrome Pigments
Level of Treatment: 2
Waste Water Flow: 100 m3/kkg

Pollutant	Treatability (mg/l)	VFR (1)	Quality Limit (mg/l)		Emission Limit (kg/kkg)	
			30 day Aver	24 hr Max	30 day Aver	24 hr Max
BPT Pollutants:						
Total Suspended Solids, TSS	15	2.0	15	30	1.5	3.0
Total Chromium, Cr	0.05	3.0	1.0	3.0	0.1	0.3
Hexavalent Chromium, Cr+6	0.2	3.0	0.2	0.6	0.02	0.06
Iron, Fe	1.0	2.0	1.0	2.0	0.1	0.2
Lead, Pb	0.1	2.0	0.1	0.2	0.01	0.02
Zinc, Zn	0.2	2.0	0.2	0.4	0.02	0.04
Cyanide, CN	0.5	4.0	0.5	2.0	0.05	0.2
Oxidizable Cyanide, CN(A)	0.05	4.0	0.05	0.2	0.005	0.02
Proposed Priority Pollutants						
Copper, Cu	0.05	2.0	0.05	0.1	0.005	0.01
Nickel, Ni	0.1	2.0	0.1	0.2	0.01	0.02

(1) - VFR: ratio of the 24 hour variability factor to the 30 day variability factor.

TABLE 16-12 MODEL PLANT TREATMENT COSTS

Subcategory	CHROME PIGMENTS	Type of Regulation BAT
Production	1,500 metric tons per year (1,653 tons per year) 4 metric tons per day (4 tons per day)	
Waste water flow	454 cubic meters per day.	

	LEVEL OF TREATMENT*	
	FIRST	SECOND
A. INVESTMENT COST		
Construction	$36,800	$500
Equipment in place, including piping, fittings, electrical work and controls.....	280,650	6,000
Monitoring equipment in place.....	9,000	
Engineering design and inspection.....	65,290	1,300
Incidentals, overhead, fees, contingencies...	65,290	1,300
Land.....	6,000	
TOTAL INVESTMENT COST	$463,030	$9,100
B. OPERATION AND MAINTENANCE COST		
Labor and supervision.	$112,000	$14,000
Energy.....	7,350	300
Chemicals.....	53,000	2,200
Maintenance.....	45,703	910
Taxes and insurance...	13,890	273
Residual waste disposal.....	5,000	
Monitoring, analysis and reporting.....	15,000	7,500
TOTAL OPERATION AND MAINTENANCE COST	$251,943	$25,183
C. AMORTIZATION OF INVESTMENT COST	$74,358	$1,480
TOTAL ANNUAL COST	$326,301	$26,663

*First level represents the base cost of treatment system. Other levels represent the incremental cost above base cost.

TABLE 16-13 MODEL PLANT TREATMENT COSTS

Subcategory CHROME PIGMENTS — Type of Regulation BAT

Production 4,000 metric tons per year (4,410 tons per year)
11 metric tons per day (12 tons per day)

Waste water flow 1219 cubic meters per day.

	LEVEL OF TREATMENT*	
	FIRST	SECOND
A. INVESTMENT COST		
Construction	$53,900	$1,000
Equipment in place, including piping, fittings, electrical work and controls.....	510,000	10,000
Monitoring equipment in place.....	9,000	
Engineering design and inspection.....	114,580	2,200
Incidentals, overhead, fees, contingencies...	114,580	2,200
Land.....	12,000	
TOTAL INVESTMENT COST	$814,060	$15,400
B. OPERATION AND MAINTENANCE COST		
Labor and supervision.	$112,000	$14,000
Energy.....	15,000	300
Chemicals.....	141,300	5,900
Maintenance.....	80,206	1,540
Taxes and insurance...	24,421	462
Residual waste disposal.....	15,000	
Monitoring, analysis and reporting.....	15,000	7,500
TOTAL OPERATION AND MAINTENANCE COST	$402,927	$29,702
C. AMORTIZATION OF INVESTMENT COST	$130,495	$2,505
TOTAL ANNUAL COST	$533,422	$32,207

*First level represents the base cost of treatment system. Other levels represent the incremental cost above base cost.

TABLE 16-14 MODEL PLANT TREATMENT COSTS

Subcategory CHROME PIGMENTS		Type of Regulation BAT
Production	6,000 metric tons per year (	6,615 tons per year)
	17 metric tons per day (	18 tons per day)
Waste water flow	1820 cubic meters per day.	

	LEVEL OF TREATMENT*	
	FIRST	SECOND
A. INVESTMENT COST		
Construction	$71,400	$1,000
Equipment in place, including piping, fittings, electrical work and controls.....	667,000	14,000
Monitoring equipment in place.....	9,000	
Engineering design and inspection.....	149,480	3,000
Incidentals, overhead, fees, contingencies...	149,480	3,000
Land.....	12,000	
TOTAL INVESTMENT COST	$1,058,360	$21,000
B. OPERATION AND MAINTENANCE COST		
Labor and supervision.	$112,000	$14,000
Energy.....	20,200	300
Chemicals.....	211,500	8,800
Maintenance.....	104,636	2,100
Taxes and insurance...	31,750	630
Residual waste disposal.....	20,000	
Monitoring, analysis and reporting.....	15,000	7,500
TOTAL OPERATION AND MAINTENANCE COST	$515,086	$33,330
C. AMORTIZATION OF INVESTMENT COST	$170,242	$3,416
TOTAL ANNUAL COST	$685,328	$36,746

*First level represents the base cost of treatment system. Other levels represent the incremental cost above base cost.

TABLE 16-15 MODEL PLANT TREATMENT COSTS

Subcategory CHROME PIGMENTS Type of Regulation BAT

Production 18,000 metric tons per year (19,845 tons per year)
51 metric tons per day (56 tons per day)
Waste water flow 5460 cubic meters per day.

	LEVEL OF TREATMENT*	
	FIRST	SECOND
A. INVESTMENT COST		
Construction	$205,500	$2,000
Equipment in place, including piping, fittings, electrical work and controls.....	1,495,500	30,000
Monitoring equipment in place.....	9,000	
Engineering design and inspection.....	342,000	6,400
Incidentals, overhead, fees, contingencies...	342,000	6,400
Land.....	18,000	
TOTAL INVESTMENT COST	$2,412,000	$44,800
B. OPERATION AND MAINTENANCE COST		
Labor and supervision.	$112,000	$14,000
Energy.....	28,000	600
Chemicals.....	635,000	26,400
Maintenance.....	239,400	4,480
Taxes and insurance...	72,360	1,344
Residual waste disposal.....	60,000	
Monitoring, analysis and reporting.....	15,000	7,500
TOTAL OPERATION AND MAINTENANCE COST	$1,161,760	$54,324
C. AMORTIZATION OF INVESTMENT COST	$389,503	$7,288
TOTAL ANNUAL COST	$1,551,263	$61,612

*First level represents the base cost of treatment system.
Other levels represent the incremental cost above base cost.

production is shown graphically in Figure 16-12. Treatment cost per metric ton of product is given in Figure 16-13.

Table 16-16 shows a summary of the unit cost distribution between amortization and the operation and maintenance cost components at various production rates and levels of treatment.

Summary

Cost estimates for first level of treatment indicate that amortization, chemicals, and labor have a significant impact on the total annual costs.

At the second level of treatment, additional labor and and monitoring costs have significant impact on the annual costs.

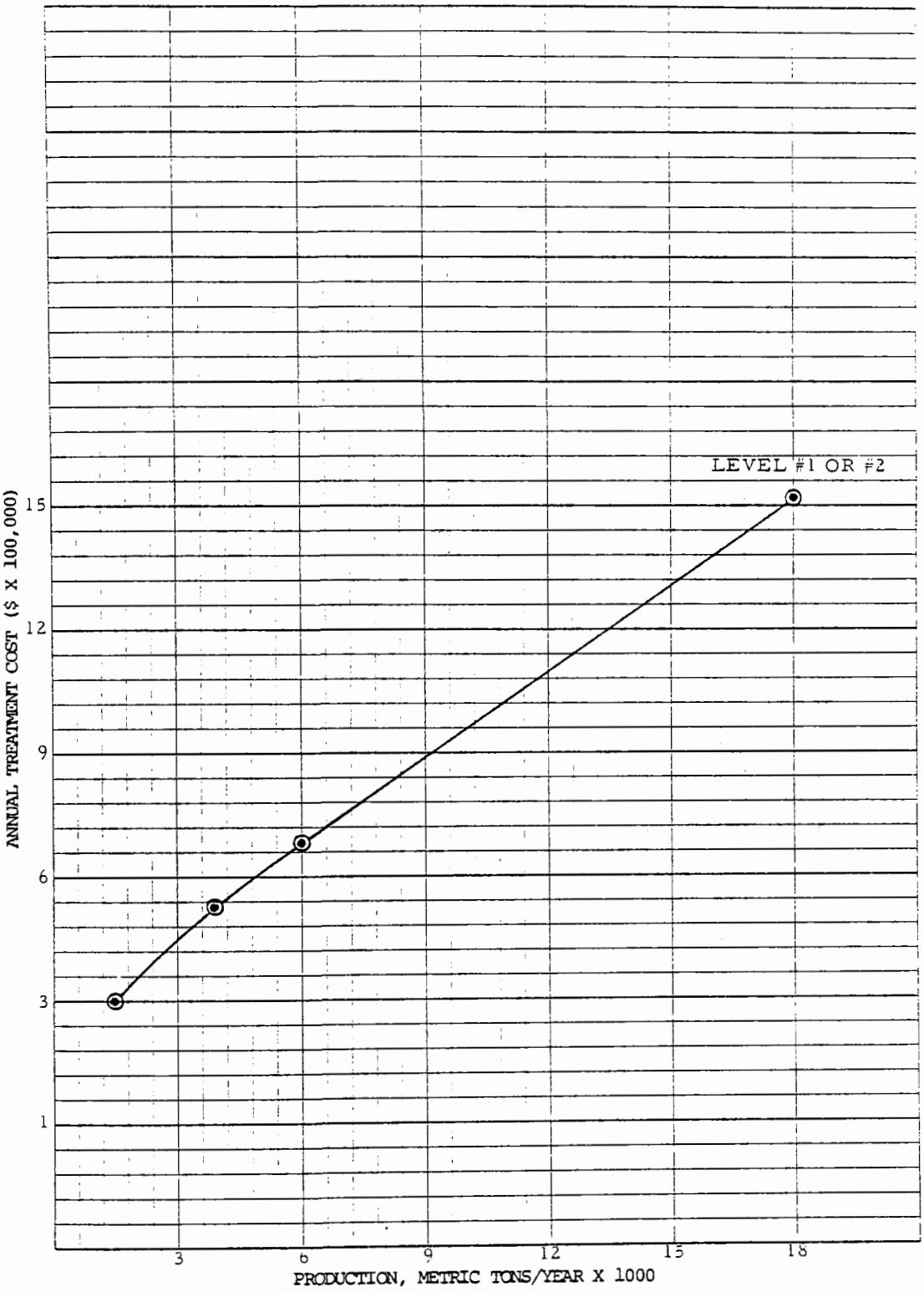

Figure 16-12. Annual treatment cost vs. production for the Chrome Pigments Subcategory

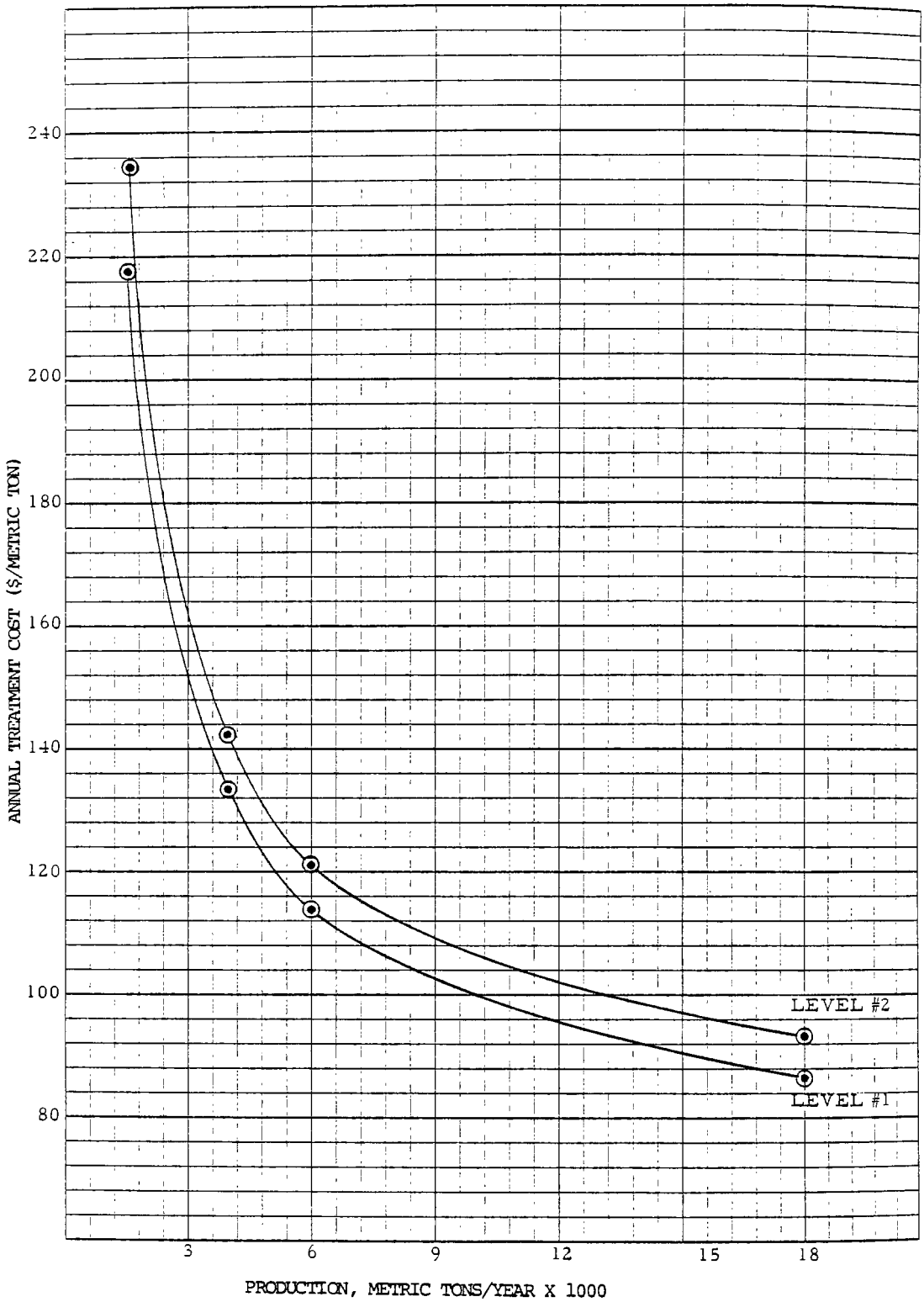

Figure 16-13. Annual unit treatment cost vs. production for the Chrome Pigments Subcategory

TABLE 16-16 MODEL PLANT TREATMENT COSTS

Subcategory CHROME PIGMENTS Type of Regulation BAT

	PRODUCTION (kkg/yr)	FLOW (m3/day)	Annual Treatment Costs ($/kkg) LEVEL OF TREATMENT FIRST $	SECOND $	THIRD $	FOURTH $
Annual Operation and Maintenance	1,500	454	167.96	16.79	Not Applicable	
	4,000	1,219	100.73	7.43		
	6,000	1,820	85.85	5.56		
	18,000	5,460	64.54	3.02		
Annual Amortization	1,500	454	49.57	0.99		
	4,000	1,219	32.62	0.63		
	6,000	1,820	28.37	0.57		
	18,000	5,460	21.64	0.40		
Total Cost	1,500	454	217.53	17.78		
	4,000	1,219	133.36	8.05		
	6,000	1,820	114.22	6.12		
	18,000	5,460	86.18	3.42		

SECTION 17

HYDROGEN CYANIDE INDUSTRY

17.1 ASSESSMENT OF THE WATER POLLUTION POTENTIAL OF THE ANDRUSSOW PROCESS

17.1.1 Industry Profile and Analytical Results

Over 50 percent of the Hydrogen Cyanide manufactured is produced by the Andrussow process, while about 40 percent is a by-product from acrylonitrile manufacture. A major portion of the production is used in the manufacture of methyl methacrylate for lucite, plexiglas molding and extrusion powders, and surface coating resins. It is also used as a fumigant for orchards and tree crops.

The industrial data profile for this industry is given in Table 17-1, while the existing regulations are given in Table 17-2.

Priority pollutants found at significant levels in raw wastes during sampling at Andrussow Process plants were as follows:

Pollutant	Maximum Concentrations (ug/l) Screening*	Verification (2 Plants)
Cyanide	166	186
Thallium	25	No sample taken

*Includes other cyanide process wastes

The thallium detected is believed to be not related to the HCN process, but rather to metal cyanide processes at the same plant.

A summary of daily and unit product raw waste loads for all plants sampled can be found in Table 17-3. Individual plant raw waste loads per unit product found in sampling can be found in Table 17-4.

Based on the total annual production of this subcategory and the average waste load generated per unit product, the estimated total priority pollutant raw waste loads generated each year for this subcategory are as follows:

TABLE 17-1 - SUBCATEGORY PROFILE DATA SUMMARY

SUBCATEGORY	HYDROGEN CYANIDE
Total subcategory capacity rate	289,000 kkg/year
Total subcategory production rate	165,500 kkg/year
Number of plants in this subcategory	11
308 Data on file for	3
With total capacity of	218,000 kkg/year
With total production of	136,000 kkg/year
Representing capacity	75 percent
Representing production	82 percent
Plant production range:	
Minimum	8,500 kkg/year
Maximum	64,600 kkg/year
Average production	57,800 kkg/year
Median production	57,800 kkg/year
Average capacity utilization	65 percent
Plant age range:	
Minimum	3 years
Maximum	9 years
Wastewater flow range:	
Minimum	1,150 cubic meters/day
Maximum	7,310 cubic meters/day
Volume per unit product:	
Minimum	6 cubic meters/kkg
Maximum	50 cubic meters/kkg

Sources of data are Stanford Research Institute, Directory of Chemical Producers, U.S.A., 1977, U.S. Department of Commerce, Current Industrial Reports, December 1977; Energy and Environmental Analysis, Inc.; Draft Report, "Preliminary Economic Assessment of Effluent Limitations in the Inorganic Chemical Industry."

TABLE 17-2 - EXISTING REGULATIONS - EFFLUENT LIMITATION GUIDELINES

SUBCATEGORY Hydrogen Cyanide

SUBPART AP (40CFR 415.420, 5/22/75)

		STANDARDS					
		BPCTCA*		BATEA		NSPS	
Product Process	Parameters	Max.[1] kg/kkg (mg/l)	Avg.[2] k/kkg (mg/l)	Max. k/kkg (mg/l)	Avg. k/kkg (mg/l)	Max. k/kkg (mg/l)	Avg. k/kkg (mg/l)
Andrussow Process	TSS	2.4 (48.0)**	1.2 (24.0)				
	CN	0.05 (1.0)	0.025 (0.5)				
	CN(A)	0.005 (0.1)	0.0025 (0.05)				
	BOD_5	3.6 (72.0)	1.8 (36.0)				
	NH_3-N	0.36 (7.2)	0.18 (3.6)				

*Sections 415.420, 415.421, and 415.422 were revoked by the Agency (41 FR 10681, February 23, 1977).

[1]Max. = Maximum of any one day.

[2]Avg. = Average of daily values for thirty consecutive days shall not exceed.

**flow basis 50,000 l/kkg.

TABLE 17-3. SUMMARY OF RAW WASTE LOADINGS FOUND IN SCREENING AND VERIFICATION SAMPLING

SUBCATEGORY HYDROGEN CYANIDE

Pollutant	Loadings kg/day Minimum	kg/day Average	kg/day Maximum	kg/kkg Minimum	kg/kkg Average	kg/kkg Maximum	No. of Plants Averaged
Priority							
Total Cyanide, CN_T	173	205	237	0.81	1.20	1.60	2
Free Cyanide, CN_A	106	113	120	0.49	0.65	0.81	2
Conventional							
TSS	152	383	614	1.02	1.94	2.87	
NH_3-N	3881	5793	7705	26.2	31.1	36.0	
BOD_5	24.5	4323	8621	0.16	20.2	40.3	

TABLE 17-4. PRIORITY POLLUTANT RAW WASTE LOADS (in kg/kkg of Product)

SUBCATEGORY	HYDROGEN CYANIDE		
POLLUTANT	PLANT		
	#765	# 782	#765
Total Cyanide, CN_T	5.9	0.808	1.6
Free Cyanide, CN_A	NA	0.49	0.807
Thallium, Tl	0.0014		

NA = Not Available

Pollutant	Waste Load (kg/year)
Cyanide (Total)	200000
Cyanide (Free)	110000

17.1.2 Process Waste Sources and Waste Water Treatment Data

General Process Description

The hydrogen cyanide subcategory in this study is confined to the Andrussow process, in which air, ammonia and methane are reacted to produce hydrogen cyanide.

The raw materials are reacted at elevated temperatures (900-1000 Degrees C) over a platinum catalyst. The reaction is given as:

$$2CH_4 + 2NH_3 + 3O_2 = 2HCN + 6H_2O \quad (1)$$

The source of methane is natural gas containing 50 to 100 volume percent methane. In addition to hydrogen cyanide, the reacted gases contain ammonia, nitrogen, carbon monoxide, carbon dioxide, hydrogen and small amounts of oxygen, as well as traces of organic nitriles formed from nonmethane components of natural gas. The reactor gases are cooled and then scrubbed in one of two processes which are used to remove the unreacted ammonia. In one patented process the gases are scrubbed with phosphate liquor and the resulting solution is decomposed and the phosphate solution is recirculated. The recovered ammonia is recycled to the reactor. In the second process sulfuric acid is used to absorb ammonia from the reactor gases. At one plant the resulting ammonium sulfate solution is used for the manufacture of another product.

The hydrogen cyanide is removed from the ammonia scrubber effluent gases by absorbtion in cold water, and the waste gases are vented to the atmosphere. The absorbed solution containing hydrogen cyanide, water, and other contaminants is distilled to produce HCN gas of over 99 percent purity.

The water produced during the initial reaction (Equation 1) of the formation of hydrogen cyanide is purged with the distillation bottom stream and is either recycled to the absorber or discharged to the treatment facility. In order to be recycled, the absorber water bottoms have to be cooled by refrigeration prior to reuse in the HCN absorber unit. At plant locations where cold water is readily available in large quantity, it can be used on a once-through basis with a

significant savings in energy costs. Figure 17-1 presents a general block diagram for the manufacture of hydrogen cyanide by the Andrussow process.

Water Use and Waste Source Inventories

Water usage - Water is used in noncontact cooling in the absorber, pump seal quenches, flare stack flushes, for washdown and cleanup of tank cars, and for washing equipment and cleaning up leaks and spills. Table 17-5 gives the detailed water consumption at one plant and also the total consumption at two plants. The difference in water usage at these two plants is pronounced due to the use of refrigeration at one plant, and once-through cooling water at the other.

Waste sources - The following are the sources of waste water produced from the manufacture of hydrogen cyanide by the Andrussow process.

A. Distillation bottoms: The waste water contains ammonia, hydrogen cyanide and small amounts of organic nitriles. The water consists of the water produced by the reaction plus scrubber water used for the absorption of HCN. The absorption water distillation bottoms are either recycled to the ammonia absorber or discharged to the treatment facility. Even if the distillation bottom stream is recycled to the absorber, a portion of it is discharged to stop the build up of impurities.

B. Scrubber streams: If the scrubber liquid is recycled, a portion of it has to be purged to control the accumulation of impurities. The bleed contains the acid used for scrubbing and minor amounts of organic nitriles. The scrubber solution can also be used for the manufacture of other products in which case nothing is discharged from the scrubber operation.

C. Other waste water: This includes leaks and spills, equipment and tank car washings, noncontact cooling water blowdown and rainfall runoff. The tank cars are washed out with dilute acid or alkali to remove any contaminants present, which, if allowed to remain in the tank car, can polymerize the hydrogen cyanide causing safety hazards due to possible explosion during shipment. The noncontact cooling water may be contaminated with the product as a result of leaks. The recirculated cooling water is monitored for cyanide and the cooling tower blowdown is discharged to the waste water treatment facility. During shut down, the equipment is drained to avoid freeze-up and the resulting waste water is discharged to the treatment facility.

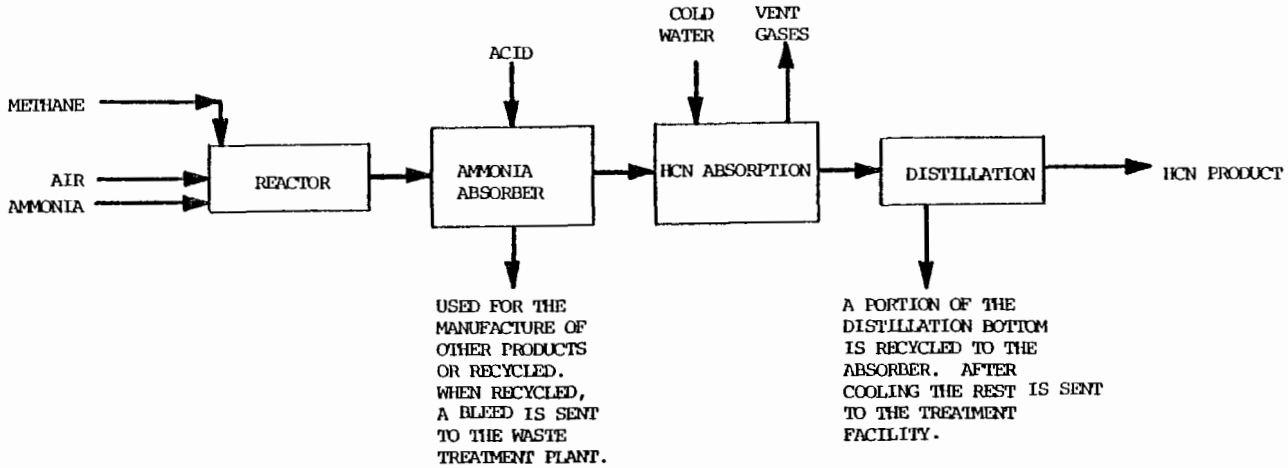

Figure 17-1. General process flow diagram for production of hydrogen cyanide by the Andrussow Process.

TABLE 17-5. WATER USAGE IN HYDROGEN CYANIDE - ANDRUSSOW PROCESS SUBCATEGORY

Plant	Water Usage, m^3/kkg of HCN	
	Total Consumption	Non-contact Cooling
#782 (1)	29.5	18.93
#765	58.3	8

(1) Detail water usage (m^3/kkg) at Plant #782 is:

Non-contact cooling	=	18.9
Direct process contact	=	7.45
Indirect process contact (pumps, seals, leaks, spills, etc.)	=	0.71
Maintenance, e.g. cleaning and work area washdown	=	0.313
Non-contact ancillary uses (boilers, utilities, etc.)	=	0.67
Exported steam	=	1.44

Control and Treatment Practices

Plant #765 was visited and the waste water sampled during the screening phase of the program. The combined wastes consist of distillation bottoms, ammonia recovery purge liquor, tank car washings, leaks, spills and equipment clean out, purge from the noncontact cooling water system and stormwater water runoff. These combined wastes are commingled with the other cyanide production waste waters and sent to the alkaline chlorination treatment facility. This consists of a trench, where the pH is adjusted to 10 with dilute caustic, followed by two ponds. Sodium hypochlorite is added at the pond inlets. The effluents from the ponds are discharged to a third pond where sufficient chlorine and caustic are added to reach the required effluent quality; namely, an oxidizable free cyanide residual of 0.1 ppm and a residual chlorine of about 15-20 ppm. The third pond is operated on a continuous flow mode and is baffled to control circulation. Agitation is provided in the flow channel, and the outlet is equipped with a control device to stop the flow when the effluent cyanide concentration exceeds the desired level. Figure 17-2 is a flow diagram of the treatment process indicating the sampling locations used during the screening program. Table 17-6 gives the flow and pollutant data for the sampled streams. A comparison of the raw and treated effluent data in the table indicates that the plant achieves a cyanide reduction of 99 percent.

Studies indicate that the presence of ammonia tends to decrease the effectiveness of cyanide destruction by alkaline chlorination by competing for the chlorine. Plants having good ammonia recovery systems are able to mitigate this type of interference, and improve performance. A major concern with alkaline chlorination of hydrogen cyanide waste is the possibility that chlorinated organics might be produced. At this plant extensive sampling and analysis of the treated effluent showed the absence of chlorinated organics above the detection limit of 50 ppb.

The second hydrogen cyanide plant sampled in the verification phase was Plant #782. The process waste water from the hydrogen cyanide plant is combined with other production waste waters and sent to a complex biological treatment system. A part of the commingled waste water is sent to an ammonia stripper from which the aqueous effluent is mixed with the rest of the waste water and sent to the treatment facility. The primary treatment facility consists of oil skimmers, grit removal and pH adjustment. The effluent from the primary treatment goes through an API separator and into an aerated lagoon. The effluent from the lagoon is flocculated and sent to a clarifier. The overflow from the clarifier is sent to a final settling basin before discharge. The surface drainage from the hydrogen cyanide and other process areas is collected separately. This is treated

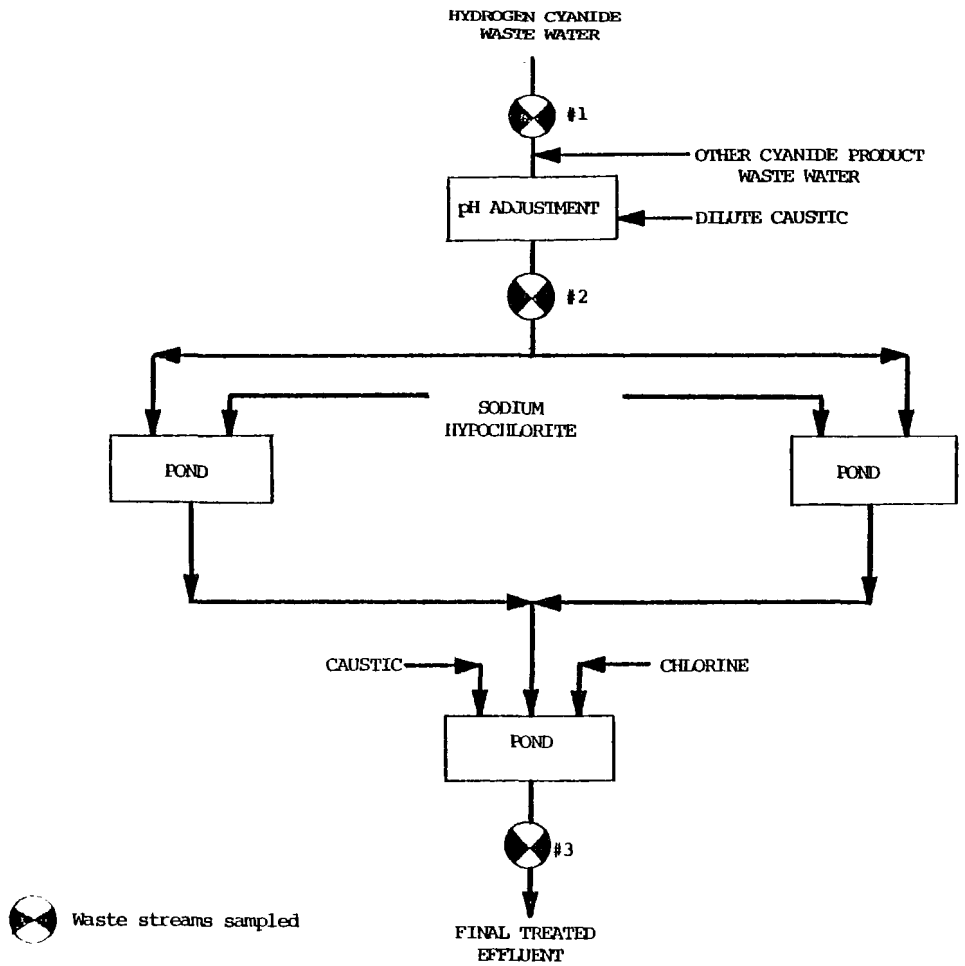

Figure 17-2. General waste water treatment process flow diagram at Plant #765 showing the sampling points. (Hydrogen Cyanide Manufacture)

TABLE 17-6. FLOW AND POLLUTANT CONCENTRATION DATA OF THE SAMPLED WASTE STREAMS FOR PLANT #765 PRODUCING HYDROGEN CYANIDE

Stream Description	Unit Flow m^3/kkg of HCN	SS Load kg/kkg of HCN	NH_3-N Load kg/kkg of HCN	CN Load kg/kkg of HCN
Raw HCN waste	57	1.08	27.2	0.82
Influent to the pond[1]	57[1]	55.8[2]	11.07[2]	0.388[2]
Treated effluent from the final pond	57[2],[3]	1.9[2]	7.05[2]	<0.000114[2]

(1) The stream is a commingled waste water. The flow given is the amount contributed by the HCN process.

(2) The pollutant load was calculated by apportioning the mass emitted between the two waste streams on the basis of measured flows. This is clearly a very approximate process and the results must be used with caution.

(3) The addition or loss of water from rainfall, addition of chemicals and evaporation has not been estimated.

chemically and passed through a trickling filter from which a portion of the effluent is sent to the aerated lagoon and the rest sent to the clarifier influent.

A general flow diagram of the treatment process including the streams sampled is shown in Figure 17-3. Table 17-7 gives the flow data and concentrations of the important pollutants. Because of the intermixing of the various product waste waters unit pollution loads are uncertain and are not given. The total waste water generated from HCN manufacture and the amount going to the treatment facility was verified during the plant visit and was confirmed in the 308 Questionnaire response provided by the industry. Based on that flow and the concentrations determined by analysis, the raw waste load is:

	Flow m3/kkg	CN(T) kg/kkg of HCN	NH3-N, kg/kkg of HCN	TSS, kg/kkg of HCN
Effluent from Combined Plant Waste Treatment	9.9	0.02	0.05	0.74

The load values assigned to the HCN process were estimated by proportioning the total loads in relation to the respective flow rates. The result is, therefore, approximate and must be used with caution. In calculating the pollutant loads, the loss or gain of water to the treatment system due to factors such as evaporation, loss through filtered solids, precipitation and the water introduced by treatment chemicals, has been neglected.

The final concentrations of cyanide and ammonia in the treated effluent shown in Table 17-7 indicate that the treatment system is efficient in the removal of these pollutants with cyanide destruction exceeding 99 percent.

The quantity of waste water produced and treated at two plants producing hydrogen cyanide by the Andrussow process is given in Table 17-8. The large variation in flow is due to the fact that at Plant #765 the water used to absorb the hydrogen cyanide from the reactor gases is not recycled. As discussed earlier, that plant is situated in a location where sufficient cold water is available for once-through use. Since the cold water is readily available at a low cost, the water used for absorption is discharged. It is reported that a similar plant practicing recycling, in the absence of available cold water, can achieve a total waste effluent of 7.1 m3/kkg of HCN.

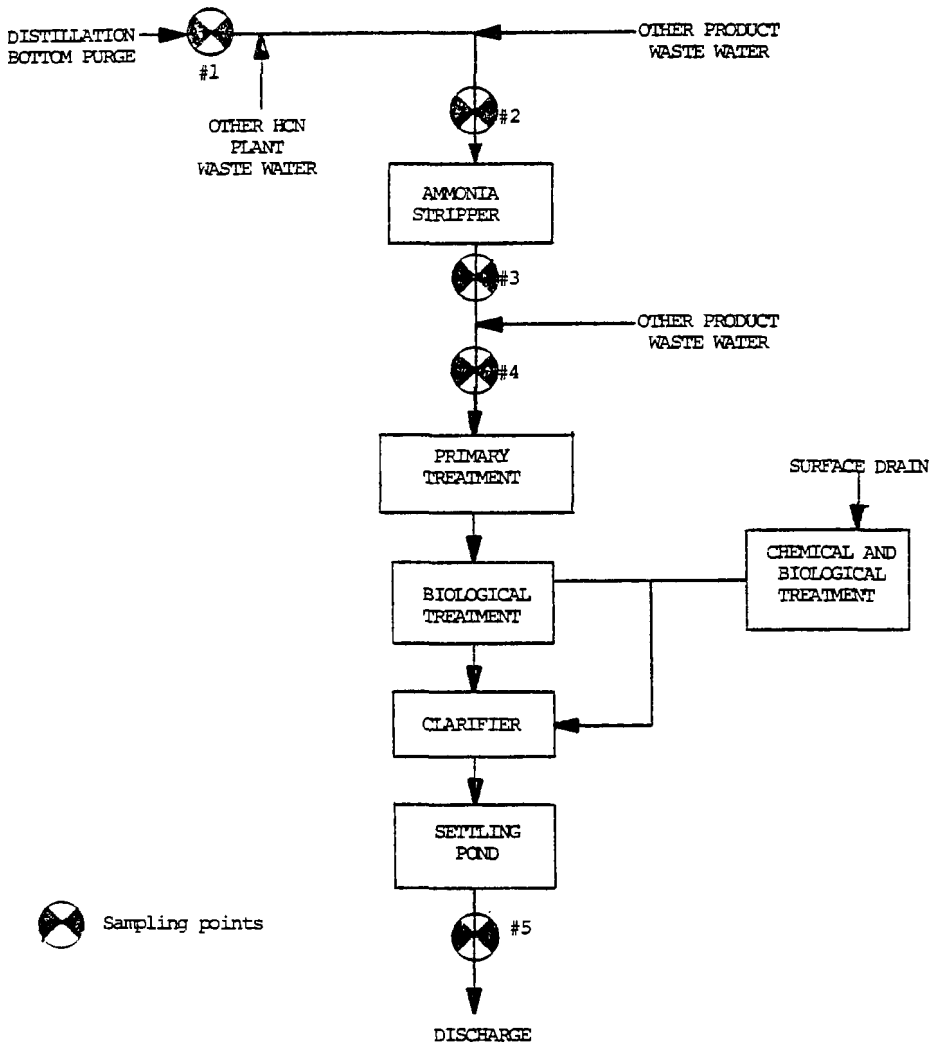

Figure 17-3. General waste water treatment process flow diagram at Plant #782 showing the sampling points. (Hydrogen Cyanide Manufacture)

TABLE 17-7. FLOW AND POLLUTANT CONCENTRATION DATA OF THE SAMPLED WASTE STREAMS FOR PLANT #782 PRODUCING HYDROGEN CYANIDE.

Stream No.	Waste Stream Description	Flow m^3/day	CN_T mg/l	NH_3-N mg/l	TSS mg/l
1	Distillation bottom purge	11.34	70	887	24
2	Ammonia stripper influent	1143	167	410	76
3	Ammonia stripper effluent	1143	51.3	41	162
4	Influent to primary treatment facility	5564	31	1381	110
5	Final treated effluent	NA	2.2	5.16	74.3

NA = Not Available.

TABLE 17-8. WASTE FLOW DATA FOR HCN PRODUCTION BY THE ANDRUSSOW PROCESS

Plant	Total waste going to the treatment facility (m^3/kkg)
#765	57
#782	9.9*

* The breakdown and flow of the different waste streams comprising the total is given below:

Source	Unit Flow m^3/kkg
Recovery and purification	6.3
Pump seal quenches	0.58
Flare stack flushes	0.09
Sample hoods	0.02
NH_3 stripper caustic	0.24
Steam condensate from NH_3 stripper	0.90
Freeze protection	0.06
Washdowns and cleanup	0.25
Boiler blowdown and condensate	1.48

Model Plant and BPT Treatment System Specifications

Production - Eight plants produce hydrogen cyanide by the Andrussow process at a total production rate of 165,000 kkg/yr. Production and waste water flow data are on file for two plants which produce a total of 116,000 kkg/yr or 70 percent of the total United States production. (This is approximately 80 percent of the United States production by the Andrussow Process). For waste water treatment cost estimates, three production levels were selected for the model plant. These are 31,800, 50,900, and 63,600 kkg/yr.

Waste water flow - Unit waste water flows for the two plants are 50 m3/kkg and 10 m3/kkg. The difference results from the two plants having different absorption water discharge practices (see earlier discussion). If recycling of absorber water were practiced at the first plant, the unit flow would be 7 m3/kkg of HCN. For model plants, treatment levels were based on this unit flow rate of 7 m3/kkg. However, because the conversion to a recycle system for this plant would be very energy intensive, an additional model may have to be developed for treatment costs using the larger flow rate.

Pollutant loading - The three major pollutants in this subcategory are cyanide, ammonia, and chlorine. Screening results indicated a cyanide loading of 1.4 kg per kkg of HCN. This loading is in agreement with a previous document [Ref. 2] and is used for the models. Screening results also indicated an ammonia loading of 1.8 kg per kkg of product following ammonia recovery. Chlorine has been reported at levels of 15 mg/l and higher in the effluents from alkaline chlorination.

Treatment technology - Alkaline chlorination was selected and used for the treatment of hydrogen cyanide waste water. The formation of chlorinated organics by the usage of this technology has not been confirmed. Cyanide complexed by metals such as copper, zinc and cadmium would also be effectively destroyed by alkaline chlorination.

Chemicals used - At the BPT level of treatment, alkaline chlorination requires 10 kg of chlorine and 10 kg of lime per kkg of HCN.

Solids Generated - Little, if any, solids are produced in the HCN treatment process.

17.2 TECHNOLOGY BASED POLLUTION ABATEMENT

17.2.1 Advanced Level Treatment Applications

Control of Significant Observed Priority Pollutants

The only priority pollutant found during field sampling was cyanide, both oxidizable and in the form of metallic complexes such as ferro- and ferricynides. Ammonia, which is present as a nonconventional pollutant, will exert a demand for chlorine used to oxidize cyanide. This pollutant should be removed by steam stripping.

Removal Technologies Available

Cyanide is decomposed readily by oxidation at high pH levels, forming cyanate as an intermediate product. Further decomposition into carbon dioxide and nitrogen is possible with complete oxidation. Alkaline chlorination is widely used in the electroplating industry to break down metallic cyanide complexes. Although other oxidation agents such as hydrogen peroxide might be used, their operating costs are generally not favorable. If ammonia is present, it increases the cost of chlorination since it, too, reacts. If ammonia is not to be controlled, ozonation may prove to be a more cost effective oxidant.

Due to excess chlorine usage, the discharge from cyanide destruction is high in chlorine and dechlorination will generally be needed. (In contrast, this is not usually a problem in the electroplating industry since there are longer retention periods and the wastes are more dilute.) Dechlorination can be accomplished by the use of an aeration basin or the addition of SO_2. The use of ozonation would negate the need for dechlorination.

Selection of Appropriate Technology

BPT (Level 1) - Two-stage alkaline chlorination followed by pH adjustment was chosen, in accordance with prevailing practice in the industry.

Level 2 - Using the same equipment as in Level 1, excess chlorine is added to insure complete destruction of cyanide and residual chloramines. The second-stage effluent is then dechlorinated.

Florams

el 1 Figure 17-4

el 2 Figure 17-5

pment Functions - In Level 1, the raw waste water is recin a holding tank equipped with an external pump and rection system. Caustic soda and chlorine are added and the contents mixed by means of the recirculation pump. Fol this first stage alkaline chlorination, the waste water is r chlorinated in a second tank which is equipped with aut pH control. The final effluent is neutralized to pH 6-9e discharge. In Level 2, using the same equipment as in Lev the chlorine feed to the second stage alkaline chlion system is increased. To remove excess chlorine befelease, sulfur dioxide is fed by a modified gas chlor, with oxidation-reduction potential control. As in Levthe effluent is then adjusted to pH 6 to 9 before dis.

icals and Handling - Caustic soda solution, chlorine, sulxide, and sulfuric acid are used in the waste treatment pro Caustic soda and sulfuric acid are common industrial che which pose no special hazards when handled by comal corrosion-resistant feeding equipment. Chlorine and sulxide are received in one-ton containers as compressed gasand are fed as water solutions by vacuum-controlled equ designed for the specific chemical. No unusual chefeeding or handling problems are anticipated, provided prens are taken to prevent gas leaks and to guard against cor attack.

ration and Removal of Solids - Since few solids are proin the treatment process, there is no significant sludge disproblem.

toring Requirements - Internal process monitoring is domely with automatic sensing and control equipment for regg pH and chlorine/sulfur dioxide residuals. Field tests foride and/or chlorine in the effluent should be made reg by the operator, and 24-hour composite effluent samples sho collected and analyzed for cyanide as required in local or permits.

17.stimated Performance of BPT Systems

najor differences in raw waste and treated effluent quafound at plants producing hydrogen cyanide by the And process are due to the following:

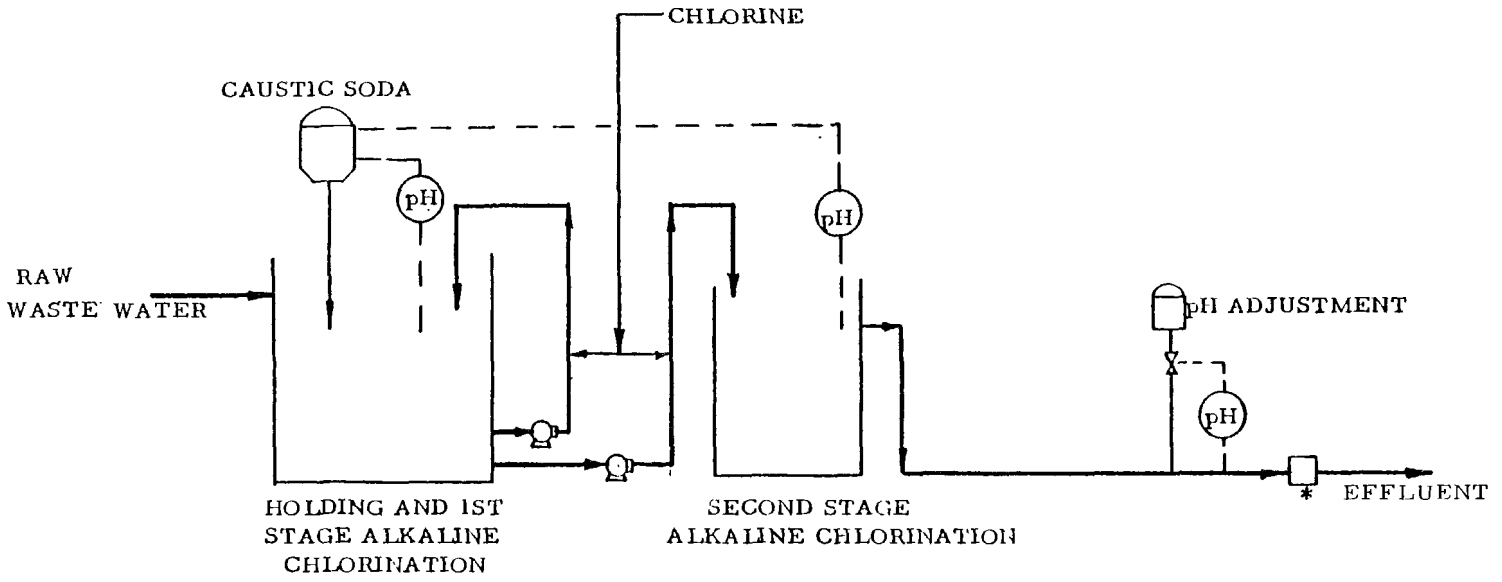

*Includes flow monitoring, pH monitoring and sampler.

Figure 17-4. Waste water treatment Level 1 for hydrogen cyanide subcategory.

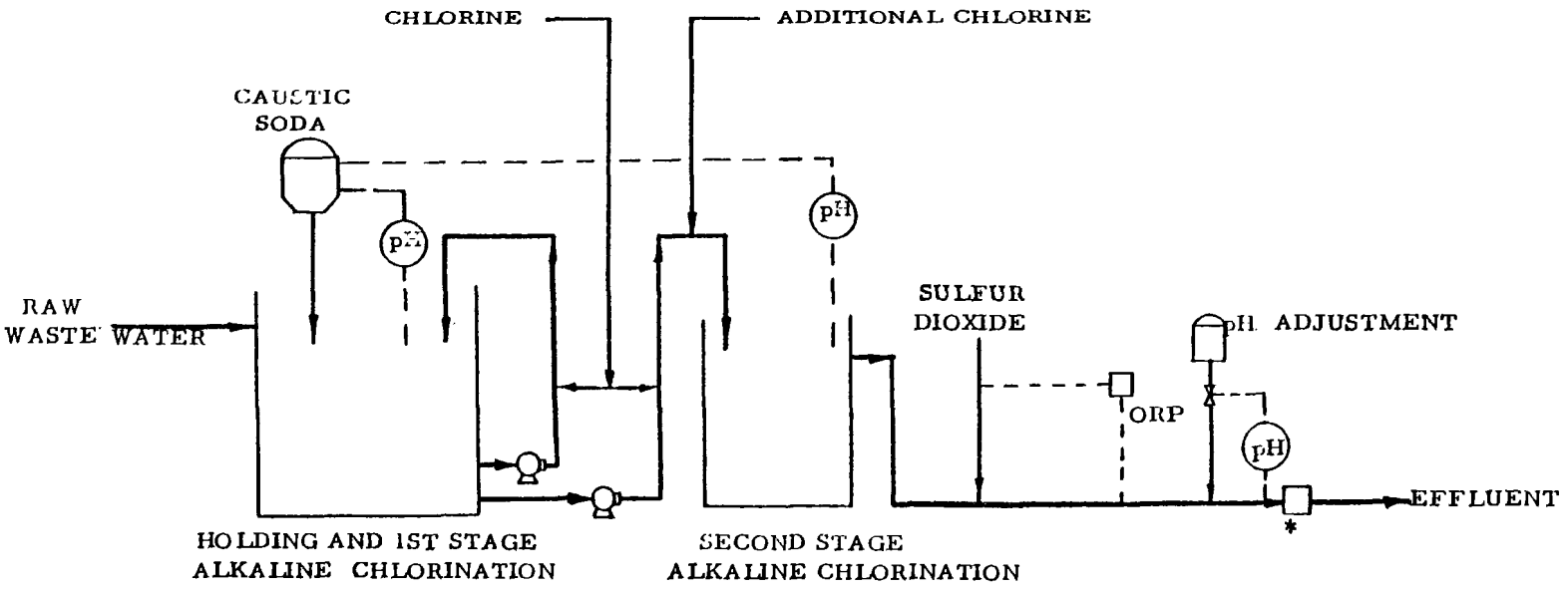

*Includes flow monitoring, pH monitoring and sampler.

ORP = Oxidation Reduction Potential Control

Figure 17-5. Waste water treatment Level 2 for hydrogen cyanide subcategory.

Cooling water recycle - In geographical locations where a supply of cool water is available, such as at Plant #765, recycle of the cyanide recovery absorption waste water is not practical because of the intense energy requirement for refrigeration of the stream prior to recycle. This once-through contact water is then treated and discharged.

In locations where a constant supply of cool water is not available, as at Plant #782, absorption water is refrigerated and recycled. Recycle of this stream, which is contaminated from contact with hydrogen cyanide and ammonia, substantially reduces the waste water volume requiring treatment.

These two different practices in handling process waste water account for the six-fold variation in unit waste water flow observed in this subcategory.

Treatment Practices - Alkaline chlorination is considered the most effective treatment for removal of oxidizable or free cyanide. However, there is concern regarding the formation of chlorinated organic compounds when organic material is prevalent in the raw waste water.

At Plant #765, raw wastes result from the manufacture of inorganic cyanide products. Alkaline chlorination is practiced and is effective in removing oxidizable cyanide, but is limited to some extent by the presence of ammonia. Iron cyanide complexes, less toxic than free or oxidizable cyanides, are not reduced as effectively.

At Plant #782, raw wastes include wastes from the manufacture of organic cyanide products. A biological treatment system is in place to reduce organic and cyanide wastes. Although effluent pollutant concentrations are higher at this plant, discharge loads per unit of production are lower due to the lower waste water flow.

Table 17-9 and 17-10 present verification sampling data from Plants #782 and #765.

Pollutant Parameters - Analytical procedures for both oxidizable and total cyanide are questionable as to their accuracies at the low levels of concentration necessary for compliance monitoring. A new method for analyzing oxidizable or free cyanide has been recommended by industry but has not yet been adopted.

The use of BOD as a pollutant parameter has been questioned at plants not using biological treatment because the test requires an acclimated seed culture and is highly sensitive to cyanide and ammonia concentrations.

TABLE 17-9. VERIFICATION SAMPLING OF HYDROGEN CYANIDE PLANT #782

VERIFICATION: (Flow = 6.25 m^3/kkg)

Pollutant	Influent mg/l	Influent kg/kkg	Effluent Quality mg/l
Total Suspended Solids, TSS	110	2.87	74
Cyanide (Total), CN_T	31	0.808	2.2
Cyanide (Free), CN_A	19.0	0.495	1.73
BOD	1549	40.34	376
Ammonia, NH_3	1381	36.05	5.04

Daily Monitoring Data - Treated Effluent

Parameter	Concentration (mg/l) Min	Avg	Max	St.Dev.	Waste Load (kg/kkg) Min	Avg	Max
Biochemical Oxygen Demand, BOD	9.0	39.7	125	25.7	0.041	2.38	10.2
Oxidizable Cyanide CN_A	0.021	0.112	0.18	0.056	0.0014	0.0072	0.013
Total Cyanide, CN_T	0.38	2.33	8.83	1.07	0.0025	0.14	1.0
Ammonia, NH_3	2.0	27.1	281	27.4	0.023	1.7	24.1
Total Suspended Solids, TSS	5.0	103	585	84.1	0.0088	6.5	50.6

TABLE 17-10. VERIFICATION SAMPLING OF HYDROGEN CYANIDE PLANT #765

VERIFICATION (Flow = 57 m^3/kkg)

Pollutant	Influent mg/l	Influent kg/kkg	Effluent Quality mg/l
Total Suspended Solids TSS*	71	6.52	19
Cyanide (Total), CN_T	28.4	2.61	<0.0026
Cyanide (Free), CN_A	6.81	0.626	<0.002
BOD	6.3	0.580	<33
Ammonia, NH_3	194	17.8	124

* Average for 2 days only.

Monitoring Data - Treated Effluent [1]

Parameter	Concentration (mg/l) Min	Avg	Max	St.Dev.	Waste Load (kg/kkg) Min	Avg	Max
Total Cyanide, CN_T	0.78	3.8	9.2	2.56	0.039	0.192	0.46
Oxidizable Cyanide, CN_A	0.01	0.2	3.27	.319	0.0005	0.01	0.16
Ammonia Nitrogen, NH_3-N	3.86	72	204	46.2	0.193	3.63	10.2
Chemical Oxygen Demand, COD	54.2	320	904	175.4	2.71	15.9	45.2
Total Organic Carbon, TOC	15.7	166	512	140	0.78	8.3	25.6
Total Suspended Solids, TSS	5.0	35	267	55	0.25	1.75	13.4

[1] Results of a 28-day comprehensive test.

BPT technology has been specified as alkaline chlorination of hydrogen cyanide waste waters. Where biological treatment is applied to the combined process wastes, however, chlorination is not due to the possibility of chlorinated organics formation.

Base Level Performance Characteristics for BPT Pollutant Removal

The treated effluent quality achievable through implementation of BPT technology, presented in Tables 17-11 and 17-12, is based primarily on the quality presently achieved at Plant #765 currently practicing this technology. The two sets of limitations reflect the two unit flow rates that exist in the industry.

Ammonia limitations are based on a presumed influent concentration of 40 mg/l wich can be achieved with stripping. Oxidizable cyanide limitations include a variability allowances to account for the precision of the analytical methods as well as plant variations.

Base Level Performance Characteristics for Priority Pollutant Removal

No priority pollutants, other than cyanide attributable to hydrogen cyanide production, were found to be of significance.

Pretreatment Applications

BPT technology is applicable for pretreatment of hydrogen cyanide wastes. Plant #765 is presently discharging to a POTW.

Pollutants such as BOD, TSS and pH are compatible with municipal treatment systems, and cyanides at low levels are easily biodegradable. Many states allow pretreatment to 2 mg/l oxidizable cyanide and 10 mg/l total cyanide.

Response to Remand Issues

The following major issues, comprising industry's comments on the original effluent limitations, were reviewed and addressed:

1. The accuracy and reliability of analytical methods for measuring cyanide from hydrogen cyanide production. At the present time, a more reliable method for analysis recommended by industry is under review. The achievable discharge quality now recommended as BPT reflects concentrations of cyanide that can be reliably and accurately analyzed.

TABLE 17-11 CONTROL PARAMETER LIMITATIONS
SUBCATEGORY: Hydrogen Cyanide
Level of Treatment: 1
Waste Water Flow: 50 m3/kkg

Pollutant	Subcategory Performance (2) (mg/l)	(1) VFR	Quality Limit (mg/l)		Emission Limit (kg/kkg)	
			30 day Aver	24 hr Max	30 day Aver	24 hr Max
BPT Pollutants:						
Total Suspended Solids, TSS	35	2.0	37.5	75	1.9	3.8
Ammonia, NH3	72	3.0	24	72	1.2	3.6
Biochemical Oxygen Demand, BOD	-	2.0	30	60	1.5	3.0
Cyanide, CN	3.8	2.0	5.0	10	0.25	0.5
Oxidizable Cyanide, CN(A)	0.2	3.0	0.5	1.5	0.025	0.075

(1) - VFR: ratio of the 24 hour variability factor to the 30 day variability factor.

(2) - Average Values

TABLE 17-12 CONTROL PARAMETER LIMITATIONS
SUBCATEGORY: Hydrogen Cyanide
Level of Treatment: 1
Waste Water Flow: 8.9 m3/kkg

Pollutant	Subcategory Performance (2) (mg/l)	(1) VFR	Quality Limit (mg/l) 30 day Aver	Quality Limit (mg/l) 24 hr Max	Emission Limit (kg/kkg) 30 day Aver	Emission Limit (kg/kkg) 24 hr Max
BPT Pollutants:						
Total Suspended Solids, TSS	35	2.0	37.5	75	0.33	0.67
Ammonia, NH3	72	3.0	24	72	0.21	0.43
Biochemical Oxygen Demand, BOD	-	2.0	30	60	0.27	0.54
Cyanide, CN	3.8	2.0	5.0	10	0.044	0.089
Oxidizable Cyanide, CN(A)	0.2	3.0	0.5	1.5	0.004	0.009

(1) - VFR: ratio of the 24 hour variability factor to the 30 day variability factor.

(2) - Average Values

2. Process differences in the production of hydrogen cyanide, particularly the different processes used to separate ammonia and cyanide. Although the two major production facilities use different processes for ammonia and cyanide separation, raw waste loads of ammonia and cyanide resulting from these processes do not differ significantly.

3. The effect of geographic location of hydrogen cyanide plants as it relates to cooling water practices. The practice of not recycling contact absorption water when a supply of cool water is available has been discussed. Recycling at such locations would be extremely energy intensive. Achievable effluent quality with BPT technology has been established with consideration of the increased volume of waste water when recycle is not practical.

4. The feasibility and cost-benefit of a 6 - 9 pH requirement for plants utilizing alkaline chlorination waste treatment. Costs of neutralization following alkaline chlorination are included in the cost tables.

5. Contaminated nonprocess wastes such as tank car washwater and maintenance washdowns. All waste water sources were addressed in the discussion of water use and waste water sources. These sources and their flows were used for the development of model plant unit waste flows.

6. Deletion from this subcategory of hydrogen cyanide produced as a by-product of acrylonitrile production. Only the Andrussow process for hydrogen cyanide production is addressed.

17.2.3 Estimated Performance of Advanced Level Systems

Identification of Control and Treatment Alternatives Applied to the Model Plant

Pollutants of major concern in this industry are cyanide and ammonia. The advanced level technology presented in Section 7 allows for further removal of ammonia and free cyanide by break-point chlorination. This technology is not applicable to plants where the potential for the formation of chlorinated organics exists.

Advanced Level Performance Estimates for BPT and Priority Pollutant Removal

Table 17-13 and 17-14 present estimated achievable effluent quality through the implementation of this advanced technology.

TABLE 17-13 CONTROL PARAMETER LIMITATIONS
SUBCATEGORY: Hydrogen Cyanide
Level of Treatment: 2
Waste Water Flow: 50 m3/kkg

Pollutant	Treatability (mg/l)	(1) VFR	Quality Limit (mg/l)		Emission Limit (kg/kkg)	
			30 day Aver	24 hr Max	30 day Aver	24 hr Max
BPT Pollutants:						
Total Suspended Solids, TSS	25	2.0	37.5	75	1.9	3.8
Ammonia, NH3	5.0	3.0	5.0	15	0.25	0.75
Biochemical Oxygen Demand, BOD	30	2.0	30	60	1.5	3.0
Cyanide, CN	5.0	2.0	5.0	10	0.25	0.5
Oxidizable Cyanide, CN(A)	0.2	3.0	0.2	0.6	0.01	0.03
Total Residual Chlorine, Cl	0.2	2.0	0.2	0.4	0.01	0.02

(1) - VFR: ratio of the 24 hour variability factor to the 30 day variability factor.

TABLE 17-14 CONTROL PARAMETER LIMITATIONS
SUBCATEGORY: Hydrogen Cyanide
Level of Treatment: 2
Waste Water Flow: 8.9 m3/kkg

Pollutant	Treatability (mg/l)	(1) VFR	Quality Limit (mg/l)		Emission Limit (kg/kkg)	
			30 day Aver	24 hr Max	30 day Aver	24 hr Max
BPT Pollutants:						
Total Suspended Solids, TSS	25	2.0	37.5	75	0.33	0.67
Ammonia, NH3	5.0	3.0	5.0	15	0.044	0.014
Biochemical Oxygen Demand, BOD	30	2.0	30	60	0.27	0.53
Cyanide, CN	5.0	2.0	5.0	10	0.044	0.14
Oxidizable Cyanide, CN(A)	0.2	3.0	0.2	0.6	0.0018	0.005
Total Residual Chlorine, Cl2	0.2	2.0	0.2	0.4	0.0018	0.0036

(1) - VFR: ratio of the 24 hour variability factor to the 30 day variability factor.

New Source Performance Standards

Examination of current control and treatment practices has led to the conclusion that NSPS for new hydrogen cyanide plants should be equivalent to BPT treatment technology with appropriate recycle of absorption water to minimize process waste volumes.

17.2.4 Cost Estimates

Discussion

The cost estimates for three models at different production and levels of treatment are presented in Tables 17-15, 17-16 and 17-17. Annual treatment costs as a function of production is shown graphically in Figure 17-6. Treatment cost per metric ton of product is shown in Figure 17-7.

Table 17-18 gives a summary of the unit cost distribution between amortization and operation and maintenance cost components at various production and levels of treatment.

Summary

Cost estimates developed for the first level of treatment indicate that chemical cost has the most significant impact on the total annual costs. At the second level of treatment, additional chemical cost is the single most important factor in the annual costs.

TABLE 17-15. MODEL PLANT TREATMENT COSTS

Subcategory HYDROGEN CYANIDE — Type of Regulation BAT

Production 31,800 metric tons per year (35,059 tons per year)
90 metric tons per day (100 tons per day)
Waste water flow 640 cubic meters per day.

	LEVEL OF TREATMENT*	
	FIRST	SECOND
A. INVESTMENT COST		
Construction	$15,750	$5,100
Equipment in place, including piping, fittings, electrical work and controls.....	150,700	41,500
Monitoring equipment in place.....	9,000	
Engineering design and inspection.....	35,090	9,320
Incidentals, overhead, fees, contingencies...	35,090	9,320
Land.....	1,200	
TOTAL INVESTMENT COST	$246,830	$65,240
B. OPERATION AND MAINTENANCE COST		
Labor and supervision.	$84,000	
Energy.....	2,750	1,900
Chemicals.....	199,000	116,000
Maintenance.....	24,563	6,524
Taxes and insurance...	7,404	1,957
Residual waste disposal.....		
Monitoring, analysis and reporting.....	15,000	7,500
TOTAL OPERATION AND MAINTENANCE COST	$332,717	$133,881
C. AMORTIZATION OF INVESTMENT COST	$39,964	$10,614
TOTAL ANNUAL COST	$372,681	$144,495

*First level represents the base cost of treatment system. Other levels represent the incremental cost above base cost.

TABLE 17-16. MODEL PLANT TREATMENT COSTS

Subcategory HYDROGEN CYANIDE — Type of Regulation BAT

Production 50,900 metric tons per year (56,117 tons per year)
145 metric tons per day (160 tons per day)

Waste water flow 1020 cubic meters per day.

	LEVEL OF TREATMENT*	
	FIRST	SECOND
A. INVESTMENT COST		
Construction	$19,250	$5,500
Equipment in place, including piping, fittings, electrical work and controls.....	224,750	46,500
Monitoring equipment in place.....	9,000	
Engineering design and inspection.....	50,600	10,400
Incidentals, overhead, fees, contingencies...	50,600	10,400
Land.....	1,200	
TOTAL INVESTMENT COST	$355,400	$72,800
B. OPERATION AND MAINTENANCE COST		
Labor and supervision.	$84,000	
Energy.....	3,000	2,600
Chemicals.....	318,000	186,000
Maintenance.....	35,420	7,280
Taxes and insurance...	10,662	2,184
Residual waste disposal.....		
Monitoring, analysis and reporting.....	15,000	7,500
TOTAL OPERATION AND MAINTENANCE COST	$466,082	$205,564
C. AMORTIZATION OF INVESTMENT COST	$57,628	$11,844
TOTAL ANNUAL COST	$523,710	$217,408

*First level represents the base cost of treatment system. Other levels represent the incremental cost above base cost.

TABLE 17-17. MODEL PLANT TREATMENT COSTS

Subcategory HYDROGEN CYANIDE — Type of Regulation BAT

Production 63,600 metric tons per year (70,119 tons per year)
181 metric tons per day (200 tons per day)
Waste water flow 1280 cubic meters per day.

	LEVEL OF TREATMENT*	
	FIRST	SECOND
A. INVESTMENT COST		
Construction	$24,250	$5,700
Equipment in place, including piping, fittings, electrical work and controls.....	266,000	52,500
Monitoring equipment in place.....	9,000	
Engineering design and inspection.....	59,850	11,640
Incidentals, overhead, fees, contingencies...	59,850	11,640
Land.....	1,200	
TOTAL INVESTMENT COST	$420,150	$81,480
B. OPERATION AND MAINTENANCE COST		
Labor and supervision.	$84,000	
Energy.....	3,700	3,400
Chemicals.....	399,000	232,000
Maintenance.....	41,895	8,148
Taxes and insurance...	12,604	2,444
Residual waste disposal.....		
Monitoring, analysis and reporting.....	15,000	7,500
TOTAL OPERATION AND MAINTENANCE COST	$556,199	$253,492
C. AMORTIZATION OF INVESTMENT COST	$68,163	$13,256
TOTAL ANNUAL COST	$624,362	$266,748

*First level represents the base cost of treatment system. Other levels represent the incremental cost above base cost.

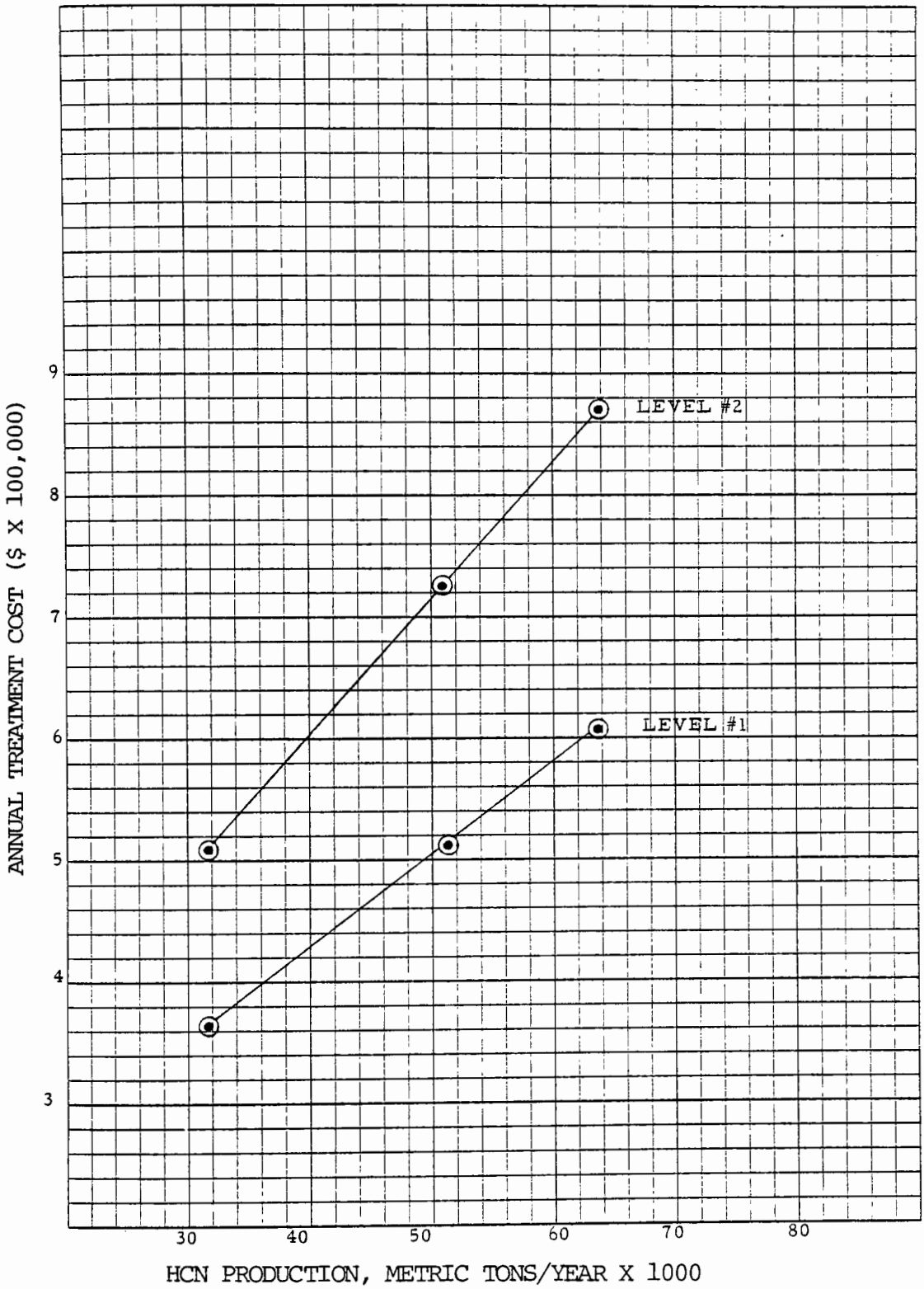

Figure 17-6. Annual treatment cost as a function of production for the Hydrogen Cyanide Subcategory

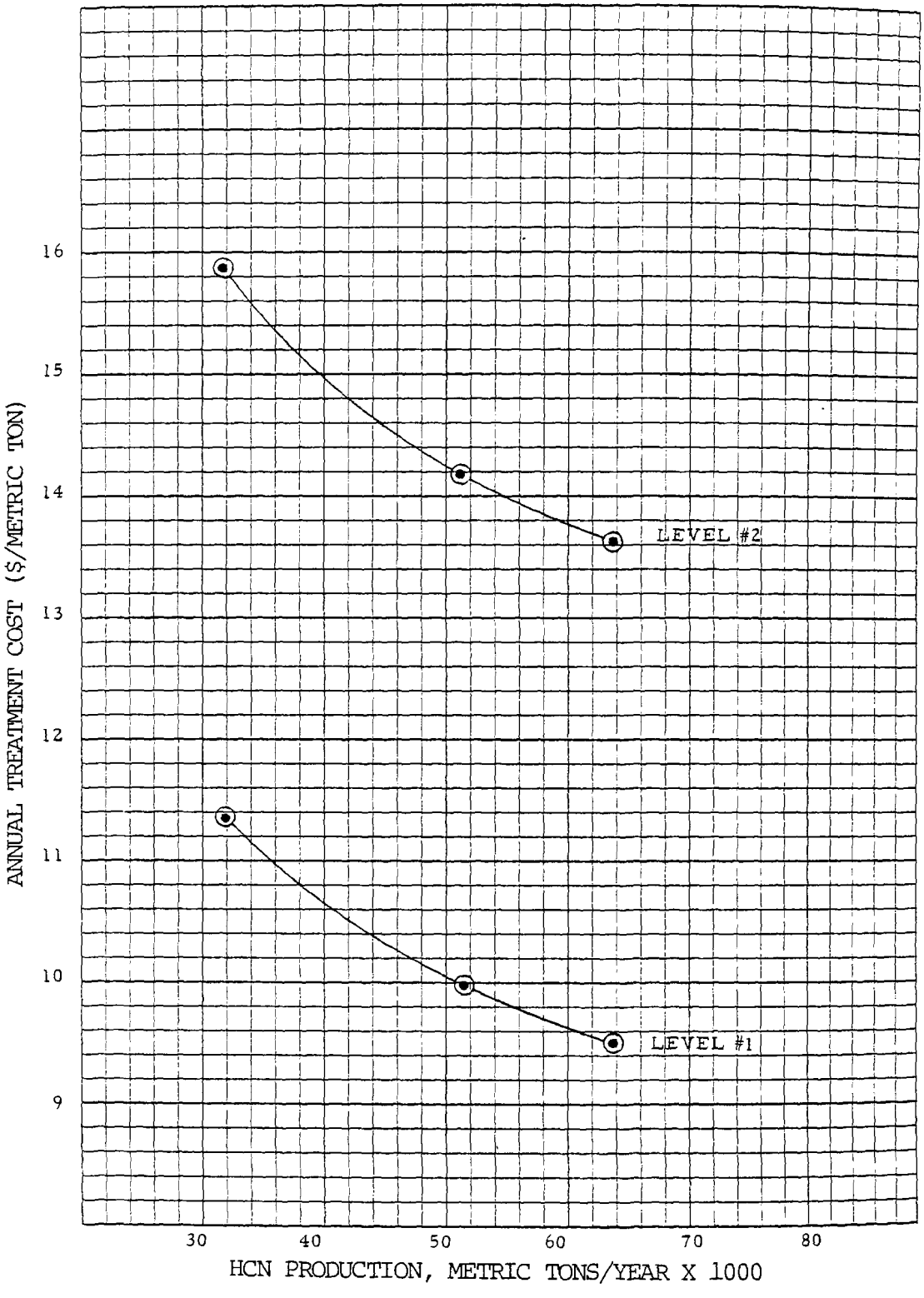

Figure 17-7. Annual unit treatment cost as a function of production for the Hydrogen Cyanide Subcategory

TABLE 17-18 MODEL PLANT TREATMENT COSTS

Subcategory HYDROGEN CYANIDE Type of Regulation BAT

			Annual Treatment Costs ($/kkg)			
			LEVEL OF TREATMENT			
	PRODUCTION (kkg/yr)	FLOW (m3/day)	FIRST $	SECOND $	THIRD $	FOURTH $
Annual Operation and Maintenance	31,800	640	10.46	4.21	Not Applicable	
	50,900	1,020	9.16	4.04		
	63,600	1,280	8.75	3.99		
Annual Amortization	31,800	640	1.26	0.33		
	50,900	1,020	1.13	0.23		
	63,600	1,280	1.07	0.21		
Total Cost	31,800	640	11.72	4.54		
	50,900	1,020	10.29	4.27		
	63,600	1,280	9.82	4.19		

SECTION 18

SODIUM DICHROMATE INDUSTRY

18.1 ASSESSMENT OF THE WATER POLLUTION POTENTIAL

18.1.1 Industry Profile and Analytical Results

Most of the sodium dichromate produced is used in the chromic acid and pigment industries. It is used for leather tanning, and metal treatment as well as a corrosion inhibitor.

The industry profile data for this subcategory is given in Table 18-1, and the summary of existing regulations is given in Table 18-2.

Priority pollutants found in significant levels in the raw waste during sampling were as follows:

Pollutant	Maximum Concentration Observed (ug/l) Screening	Verification (2 Plants)
Chromium	252,070	312,000
Nickel	12,500	1,260
Zinc	544	1,230
Copper	35	240
Silver	<.05	228*
Selenium	<5	22*

* Found at one plant only
** Non contact cooling water at one plant only

A summary of daily and unit product raw waste loads for all plants sampled can be found in Table 18-3. Individual plant raw waste loads per unit product found in sampling can be found in Table 18-4.

Based on the total annual production of this subcategory and the average waste load generated per unit product, the estimated total pollutant raw waste loads generated each year for this subcategory are as follows:

TABLE 18-1 - SUBCATEGORY PROFILE DATA SUMMARY

SUBCATEGORY	SODIUM DICHROMATE
Total subcategory capacity rate	140,000 kkg/year
Total subcategory production rate	136,500 kkg/year
Number of plants in this subcategory	5
308 Data on file for	3
With total capacity of	
With total production of	112,000 kkg/year
Representing capacity	
Representing production	82 percent
Plant production range:	
Minimum	20,700 kkg/year
Maximum	66,800 kkg/year
Average production	37,300 kkg/year
Median production	24,800 kkg/year
Average capacity utilization	77 percent
Plant age range:	
Minimum	7 years
Maximum	28 years
Wastewater flow range:	
Minimum	455 cubic meters/day
Maximum	720 cubic meters/day
Volume per unit product:	
Minimum	4 cubic meters/kkg
Maximum	8 cubic meters/kkg

Sources of data are Stanford Research Institute, Directory of Chemical Producers, U.S.A., 1977, U.S. Department of Commerce, Current Industrial Reports, December 1977; Energy and Environmental Analysis, Inc.; Draft Report, "Preliminary Economic Assessment of Effluent Limitations in the Inorganic Chemical Industry."

TABLE 18-2 - EXISTING REGULATIONS - EFFLUENT LIMITATION GUIDELINES

SUBCATEGORY Sodium Dichromate

SUBPART Q (40CFR 415.170, 3/12/74)

		STANDARDS					
		BPCTCA		BATEA*		NSPS	
Product Process	Parameters	Max.[1] kg/kkg (mg/l)	Avg.[2] k/kkg (mg/l)	Max. k/kkg (mg/l)	Avg. k/kkg (mg/l)	Max. k/kkg (mg/l)	Avg. k/kkg (mg/l)
$Na_2Cr_2O_7$	TSS	0.44	0.22	No discharge of pwwp[3]		0.30	0.15
	Cr^{+6}	0.009	0.0005	No discharge of pwwp		0.009	0.0005
	Cr(T)	0.0088	0.0044	No discharge of pwwp		0.0088	0.0044

* Section 415.173 was remanded and is presently reserved (41 FR 51601, November 23, 1976).

[1] Max. = Maximum of any one day.

[2] Avg. = Average of daily values for thirty consecutive days shall not exceed.

[3] pwwp = Process wastewater pollutants.

TABLE 18-3. SUMMARY OF RAW WASTE LOADINGS FOUND IN SCREENING AND VERIFICATION SAMPLING

SUBCATEGORY SODIUM DICHROMATE

Pollutant	Loadings						
	kg/day			kg/kkg			No. of Plants Averaged
	Minimum	Average	Maximum	Minimum	Average	Maximum	
Priority							
Chromium, Cr	82.1	132	181	0.95	1.17	1.39	2
Copper, Cu	0.0091	0.32	0.92	0.00005	0.0046	0.013	3
Nickel, Ni	0.27	4.26	8.98	0.006	0.034	0.049	3
Silver, Ag		0.058			0.0009		1
Zinc, Zn	0.067	0.22	3.91	0.0009	0.002	0.003	3
Selenium, Se		0.23			0.003		1
Arsenic, As		0.005			0.00008		1
Conventional							
TSS	26603	131066	235646	140	2068	3997	
Hex. Chromium, Cr^{+6}	27.5	1212	3105	0.466	15.7	43.9	

TABLE 18-4. PRIORITY POLLUTANT RAW WASTE LOADS (in kg/kkg of Product)

SUBCATEGORY	SODIUM DICHROMATE		
POLLUTANT	PLANT		
	#493	#398	#376
Chromium, Cr	0.95		1.39
Copper, Cu	0.00005	0.013	0.0008
Lead, Pb		0.00014	0.0002
Nickel, Ni	0.047	0.049	0.006
Zinc, Zn	0.002	0.0009	0.003
Silver, Ag			0.00099
Selenium, Se		0.003	
Arsenic, As			0.0008

Pollutant	Waste Load (kg/year)
Chromium	160000
Nickel	4600
Zinc	270
Copper	630
TSS	280,000,000
Cr+6	2,100,000

18.1.2 Process Waste Sources and Waste Water Treatment Data

General Process Description

The starting materials for the preparation of sodium dichromate are chromite ore, limestone and soda ash. When the above materials are reacted, sodium chromate is formed which is reacted with sulfuric acid to produce sodium dichromate. The reactions are given as:

$$4FeCr_2O_4 + 8Na_2CO_3 + 7O_2 = 8Na_2CrO_4 + 2Fe_2O_3 + 8CO_2 \quad (1)$$

$$2Na_2CrO_4 + H_2SO_4 = Na_2Cr_2O_7 + H_2O + Na_2SO_4 \quad (2)$$

Chromite ore is a chromium iron oxide containing ferrous chromite ($FeCr_2O_4$ or $FeOCr_2O_3$). Small amounts of aluminum, silica and magnesia are present. For the preparation of sodium chromate and finally, sodium dichromate, high grade chromite ores are used containing approximately 50 percent Cr_2O_3. These ores are imported from South Africa.

At the plant site, the ore is ground to a fine powder, mixed with soda ash and calcined in rotary kilns at 1100 to 1150 degrees C. The reacted product is leached with hot water in a leachate tank. The thickener underflow is filtered and the filtrate recycled to the leachate tank or thickener. The solid filter cake is dried in rotary kilns. The aluminum present in the thickener overflow is hydrolyzed and removed from the chromate solution as precipitated aluminum hydrate in slurry form. The solution is centrifuged and the centrate is evaporated, to give a concentrated solution of sodium chromate, which is reacted with sulfuric acid to give sodium dichromate and sodium sulfate. Sodium sulfate crystallizes as anhydrous sodium sulfate from the boiling solution, and the crystals are removed by filtration. The filtrate is concentrated in multiple effect evaporators. The residual sodium sulfates separate out as solids from each of the evaporators while the hot concentrated solution of sodium dichromate from the last effect of the evaporator is

fed to a water-cooled crystallizer. Sodium dichromate crystallizes out and is centrifuged. The centrate, or mother liquor, is returned to the evaporator. The sodium dichromate crystals separated in the centrifuge are dried in a rotary drum dryer and then packaged for sale or stored for use. Figure 18-1 presents a generalized flow diagram for the production of sodium dichromate.

Water Use and Waste Source Inventories

Water Use - Water is used for noncontact cooling, in leaching, for scrubbing vent gases and for process steam for heating. Water use information provided in 308 Questionnaires is given in Table 18-5. It is possible that the figures given in the 308 Questionnaires may be the amount going to each unit operation and not the amount added as makeup water. The quantities seem unusually high for an industry practicing extensive recycling of water, as this one does.

Waste Sources -

A. Spent ore: The unreacted ore is removed from the process as a sludge. The solids contain chromium and other impurities originally present in the ore. The waste is disposed as a solid waste in a landfill or is slurried with water and sent to the treatment facility.

B. Noncontact cooling water and cooling tower blowdown: The noncontact cooling water is either used on a once-through basis and discharged or is recycled and the blowdown discharged to the treatment facility. In addition to dissolved sulfate and chloride, it may contain chromates.

C. Boiler blowdown: The steam used for heating is recovered as condensate, while the boiler blowdown is discharged to the treatment facility. It may become contaminated with chromium escaping from the process area and hence should be sent to the waste water treatment facility for treatment.

The majority of aqueous streams resulting from the manufacture of sodium dichromate are recycled. Streams recycled include condensates from product evaporation and drying; product recovery filtrates; air pollution control scrubber effluents from product drying, leaching and roasting kilns; filter wash waters; and equipment and process area washdowns. At two plants the waste water, consisting of boiler and noncontact cooling tower, is used to slurry the spent ore residue to the waste water treatment facility. At one plant, the only waste water resulting from process operations is the noncontact cooling water, which is used on a once-through basis.

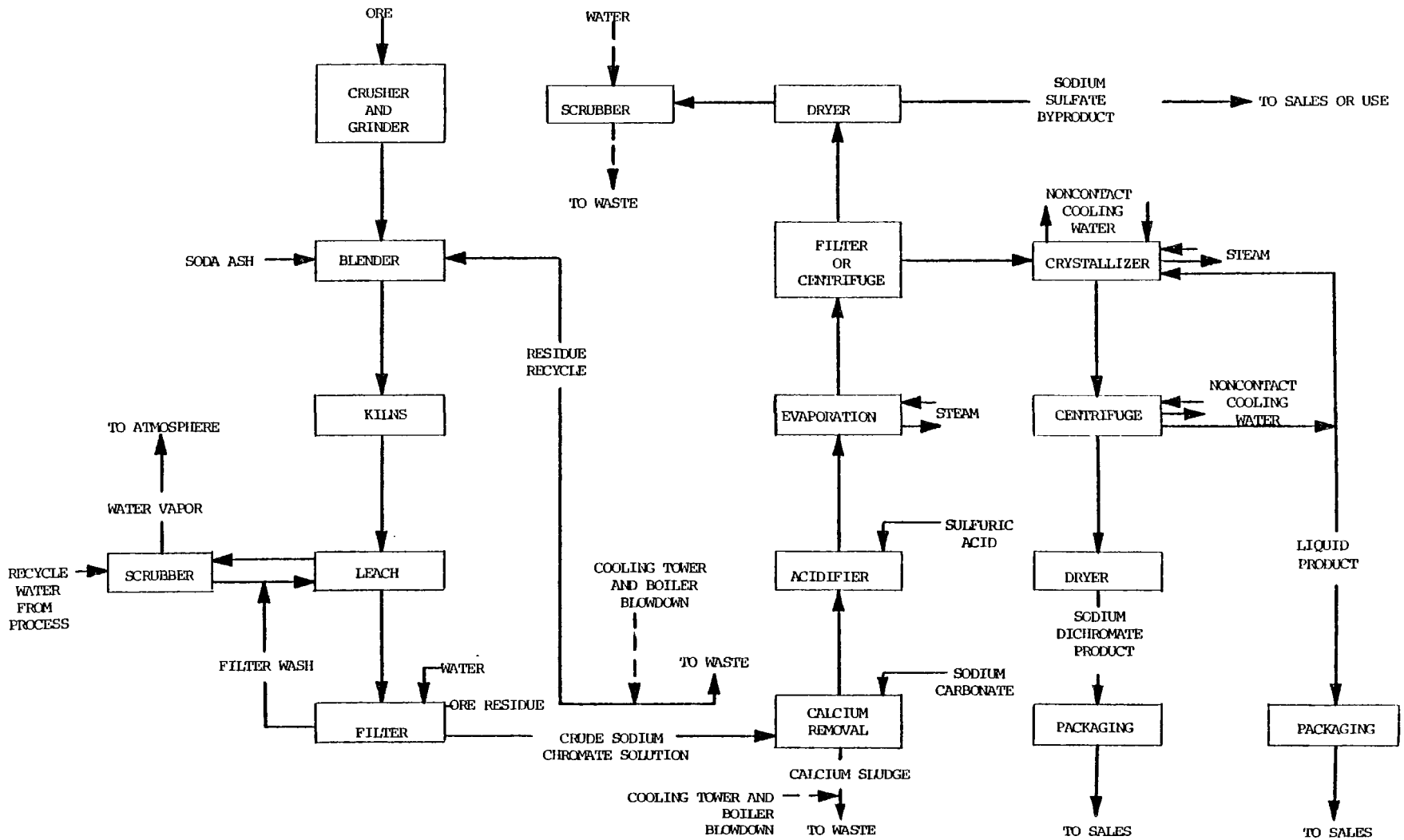

Figure 18-1. General process diagram for production of sodium dichromate.

TABLE 18-5. WATER USAGE IN SODIUM DICHROMATE SUBCATEGORY

Source	Water usage at plants m^3/kkg of $Na_2Cr_2O_7$		
	Plant #398	Plant #376	Plant #493
Non-contact cooling	255	11.39	5.7
Direct process contact	5.7	NA	2.85
Indirect process contact (pumps, seals, leaks and spills)	0.9	NA	0.2
Maintenance, e.g. cleaning and work area washdown	0.5	NA	0.2
Air pollution control	2.5	NA	1.0
Non-contact ancillary uses	0.5	NA	3.12

NA = Not Available

Control and Treatment Practices

Three sodium dichromate plants were visited and the waste water streams sampled. Plant #493 was sampled in the screening phase and Plants #376 and #398 were sampled in the verification phase.

At Plant #493, the waste water going to the treatment facility includes the boiler and cooling tower blowdown and a small volume of effluent from a scrubber on a by-product sodium sulfate operation. The total waste includes the spent ore residue, which is also sent to the treatment facility. At the treatment facility, the alkaline waste waters are reacted with imported acidic industrial waste at an elevated temperature in a reactor. The chromium is precipitated during the reaction. The reacted waste is sent to clarifiers via holding tanks. In the clarifiers, large quantities of water are used to wash the precipitated solids in a counter-current fashion. The final clarifier overflow, which is the treated effluent, is filtered and discharged and the clarifier underflow is disposed of in a quarry. Figure 18-2 is a block diagram of the treatment process and indicates which streams were sampled. Table 18-6 gives the flow data and pollutant emissions of the streams sampled.

At Plant #376, sodium sulfide is used for simultaneous chromate reduction and precipitation. The waste waters at this plant are segregated into two streams. One stream consists of the cooling tower and boiler blowdown and is used for slurrying the spent ore residue to the treatment facility. The second waste stream consists of stormwater runoff from both the solids disposal areas and the production areas. The first waste water stream is mixed with sodium sulfide during transporation and sent to a diked containment and settling pond system. The sulfide reduces the hexavalent chromium to trivalent chromium, which in turn is precipitated as chromium hydroxide. The solids are settled in the pond, and the overflow from the ponds is mixed with the second waste stream and reacted with sufficient alkaline sodium sulfide to reduce the chromate and precipitate chromium hydroxide. The reacted solution is sent to a settling pond where the precipitated and other suspended solids are settled and the overflow discharged. A simplified flow diagram of the waste water treatment process is given in Figure 18-3. Table 18-7 gives the flow data and pollutant emissions for the streams sampled.

At Plant #398, the only effluent produced is the noncontact cooling water. The noncontact cooling water is used on a once-through basis and is discharged without treatment through two out-falls. The solid waste residuals from the leaching process are trucked to a state-licensed hazardous waste landfill area. The amount of solid waste residue disposed of is approximately 290 kg/kkg of product. Table 18-8 gives the unit flow data and

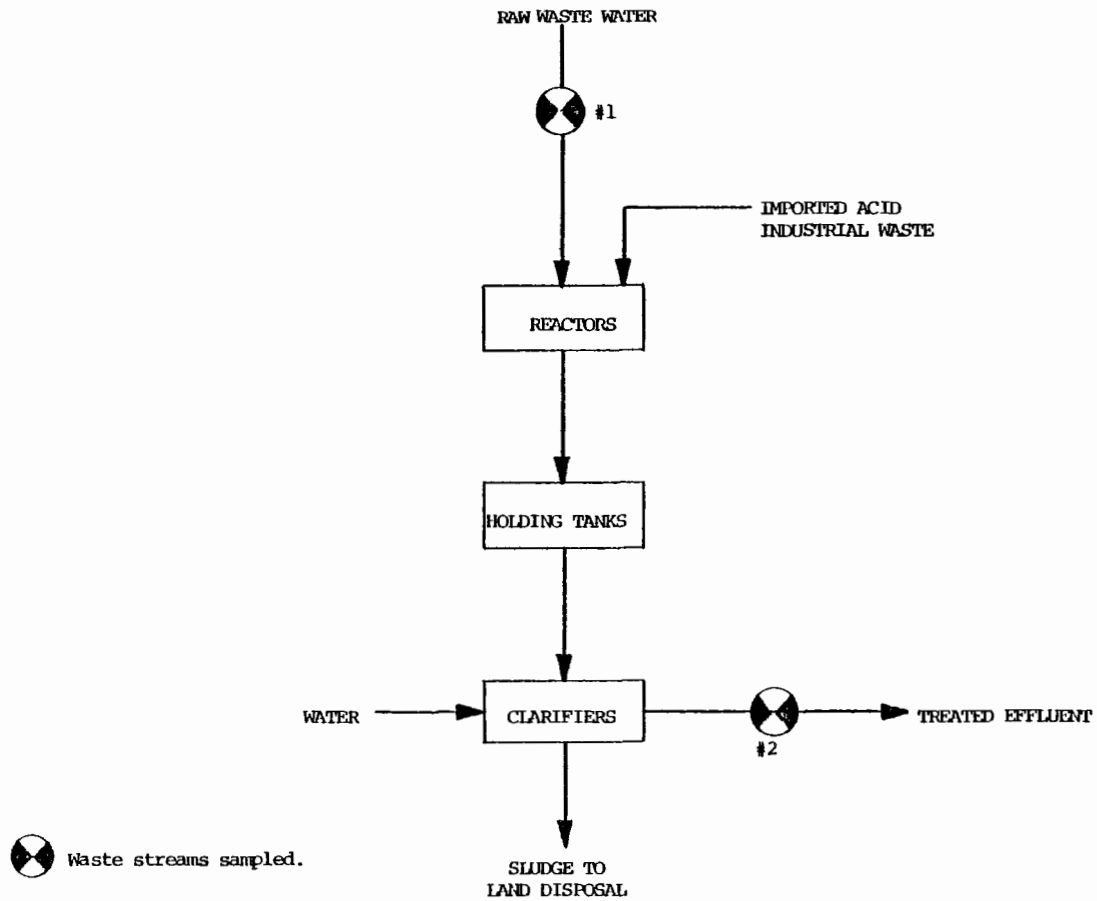

Figure 18-2. General waste water treatment process flow diagram at Plant #493 showing the sampling points. (Sodium Dichromate Manufacture)

TABLE 18-6. FLOW AND POLLUTANT CONCENTRATION DATA OF THE SAMPLED WASTE STREAMS FOR PLANT #493 PRODUCING SODIUM DICHROMATE

Stream No.	Waste Stream Description	Unit Flow m^3/kkg of $Na_2Cr_2O_7$	TSS Load kg/kkg of $Na_2Cr_2O_7$	Cr^{+6} Load kg/kkg of $Na_2Cr_2O_7$	Chromium Load kg/kkg of $Na_2Cr_2O_7$
1	Raw Waste Water	4.95	183	3.5	1.25
2	Treated Effluent	28.91	0.018	0.00004	0.022
3	Residue Slurry	2.13	185	0.0004	3.93

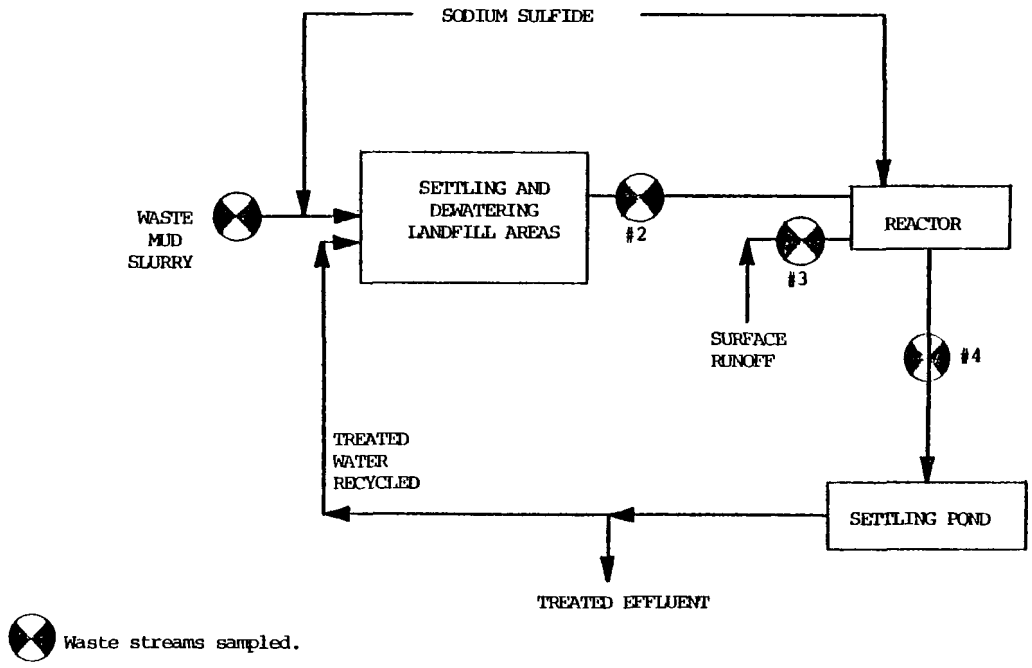

Figure 18-3. General waste water treatment process flow diagram at Plant #376 showing the sampling points. (Sodium Dichromate Manufacture)

TABLE 18-7. FLOW AND POLLUTANT CONCENTRATION DATA OF THE SAMPLED WASTE STREAMS FOR PLANT #376 PRODUCING SODIUM DICHROMATE

Stream No.	Waste Stream	Unit Flow m^3/kkg of $Na_2Cr_2O_7$	TSS Load kg/kkg of $Na_2Cr_2O_7$	Cr^{+6} Load kg/kkg of $Na_2Cr_2O_7$	Chromium Load kg/kkg of $Na_2Cr_2O_7$
1	Mud Slurry Waste	7.68	3988	0.407	1.041
2	Primary Pond Effluent	7.68	0.591	-	0.808
3	Surface Runoff	4.16	0.621	0.057	0.55
4	Effluent	4.16	7.942	-	0.77

TABLE 18-8. FLOW AND POLLUTANT CONCENTRATION DATA OF THE SAMPLED WASTE STREAMS FOR PLANT #398 PRODUCING SODIUM DICHROMATE

Stream No.	Waste Stream Description	Unit Flow m^3/kkg of $Na_2Cr_2O_7$	TSS Load kg/kkg of $Na_2Cr_2O_7$	Cr^{+6} Load kg/kkg of $Na_2Cr_2O_7$	Chromium Load kg/kkg of $Na_2Cr_2O_7$
1	Non-contact cooling water	71	-	6.72	0.013
2	Non-contact cooling water	206	-	14.28	0.018

pollutant emissions for the process effluent.

Model Plant and BPT Treatment System Specifications

Model plant specifications were selected for the purpose of cost estimation. The rationale for the selection of model plant characteristics is as follows:

Production - Five industrial plants produce sodium dichromate at a total production rate of approximately 140,000 kkg/year. Production and waste water flow data, from which model plant characteristics are derived, are on file for three plants which produce a total of 112,000 kkg/year; that is approximately 80 percent of the United States production. For waste water treatment cost estimates, three production levels were selected. These are 20,000 kkg/year, 50,000 kkg/year and 70,000 kkg/year.

Waste Water Flow - Unit waste flows for the two plants treating their waste waters are approximately 5 and 12m3/kkg of product. For the model plant, 7m3/kkg of sodium dichromate was used as the waste water flow.

Pollutant Loading - For the model plant, it is assumed that the spent ore residues are slurried and transported to the treatment facility, since this is the prevalent practice at two plants. The spent ore waste-generated residue at Plant #969 is 290 kg/kkg of Na2Cr2O7. The hexavalent chromium loading in the waste water varies from 0.5 to 14 kg/kkg of Na2Cr2O7. Pollutant loadings used for the model plants are suspended solids (spent ore residue) at 290 kg/kkg Na2Cr2O7 produced, and hexavalent chromium at 5 kg/kkg.

Chemicals required - To reduce Cr+6 to Cr+3, a sodium bisulfide dosage of 168 mg/l is needed, but to allow for reaction with other metals, a model dosage of 200 mg/l was used. This is equivalent to 1.4 kg/kkg of product in a unit flow of 7m3/kkg. To raise the pH to 9.5, 100 mg/l of lime is needed, equivalent to 0.7 kg/kkg of product. For final neutralization, HCl is used in the amount of 10% of the lime dosage.

Solids generated - Total dry solids produced are 0.36 kg/kkg of sodium dichromate.

18.2 TECHNOLOGY BASED POLLUTION ABATEMENT

18.2.1 Advanced Level Treatment Applications

Control of Significant Observed Priority Pollutants

Priority pollutants found in significant amounts are the primary pollutant, hexavalent chromium, and the common heavy metals often present as impurities in the chromium ore, notably zinc and nickel. In controlling these metals by the processes chosen for the treatment models, incidental removal of other trace heavy metals will also be achieved.

Removal Technologies Available

Alkaline precipitation or reaction with sulfide will separate nickel and zinc from solution. Hexavalent chromium must be reduced to its trivalent form before it can be precipitated by alkaline substances. Although ion exchange or xanthates can remove metals from clarified solutions they are inappropriate for treating raw waste slurries from this industry.

Technologies to be Applied at Each Level

BPT (Level 1) - The system utilizes sodium bisulfide added to the raw wastes to reduce hexavalent chromium to its trivalent form and to partially precipitate some of the metals as metallic sulfides, along with inert ore solids in a first-stage lagoon. The lagoon effluent is then subjected to alkaline precipitation of trivalent chromium, followed by solids separation in a clarifier and by pH adjustment of the overflow before discharge.

Level 2 - Dual-media filtration is added to achieve a higher level of suspended solids removal, including metallic hydroxides and sulfides which may have passed through the clarifier. The effluent is adjusted to a pH range of 6 to 9 as in Level 1. These technologies are uniquely appropriate for wastes of the sodium dichromate industry because the sodim bisulfide pretreatment performs the dual function of converting hexavalent chromium to a potentially settleable form, as well as reacting with other heavy metals to form insoluble metallic sulfides.

Flow diagrams

Level 1	Figure 18-4
Level 2	Figure 18-5

Equipment Functions - The raw waste flows into an equalizing lagoon where the influent flows are measured by a magnetic flow meter which controls application of sodium bisulfide solution into the influent pipeline. Hexavalent chromium is converted to the less toxic trivalent form and together with trace metal sulfides and inert solids passes to the first-stage lagoon. A second application of sodium bisulfide is made in the lagoon outflow, and lime is added to precipitate trivalent chromium and residual trace metals prior to clarification. In Level 1 the clarifier effluent is adjusted to pH 6 to 9 and released. In the Level 2 system a dual media filter is added to remove additional suspended material from the overflow. Clarifier underflow and filter backwash are returned to the equalizing lagoon influent, to be settled in the lagoon.

Chemicals and Handling - Sodium bisulfide, lime, and hydrochloric acid are used in the treatment process. The first application of sodium bisulfide is made into the influent pipeline in proportion to flow, minimizing the release of hydrogen sulfide at times when the influent pH may be low. The second application of sodium bisulfide is also into a closed pipeline to ensure adequate mixing with the settled lagoon effluent. Lime slurry is fed through conventional equipment ahead of the clarifier. Hydrochloric acid is used (instead of sulfuric acid) to minimize the formation of gypsum scale which could result from heavy use of lime followed by sulfuric acid. There do not appear to be unusual hazards involved in the handling of chemicals for the proposed treatment.

Separation and Disposal of Solids - As a basis for estimating model plant costs, influent suspended solids, metallic hydroxide and sulfide precipitates, and filter backwash are returned to or left in the influent lagoons(s). As each lagoon becomes filled with solids it is replaced by another, on a ten-year cycle. Liquid is decanted from each filled lagoon and the solid material needs to be disposed of in either an on-site or an off-site chemical landfill.

Monitoring Requirements - Internal process monitoring should include routine testing to maintain reducing conditions and a pH above 7 in the influent lagoons, and simple field determination of pH, to assure that the optimum level is reached for precipitation of chromic hydroxide. Routine testing of the effluent should also be performed at the site to show that hexavalent chromium is being consistently reduced to trivalent

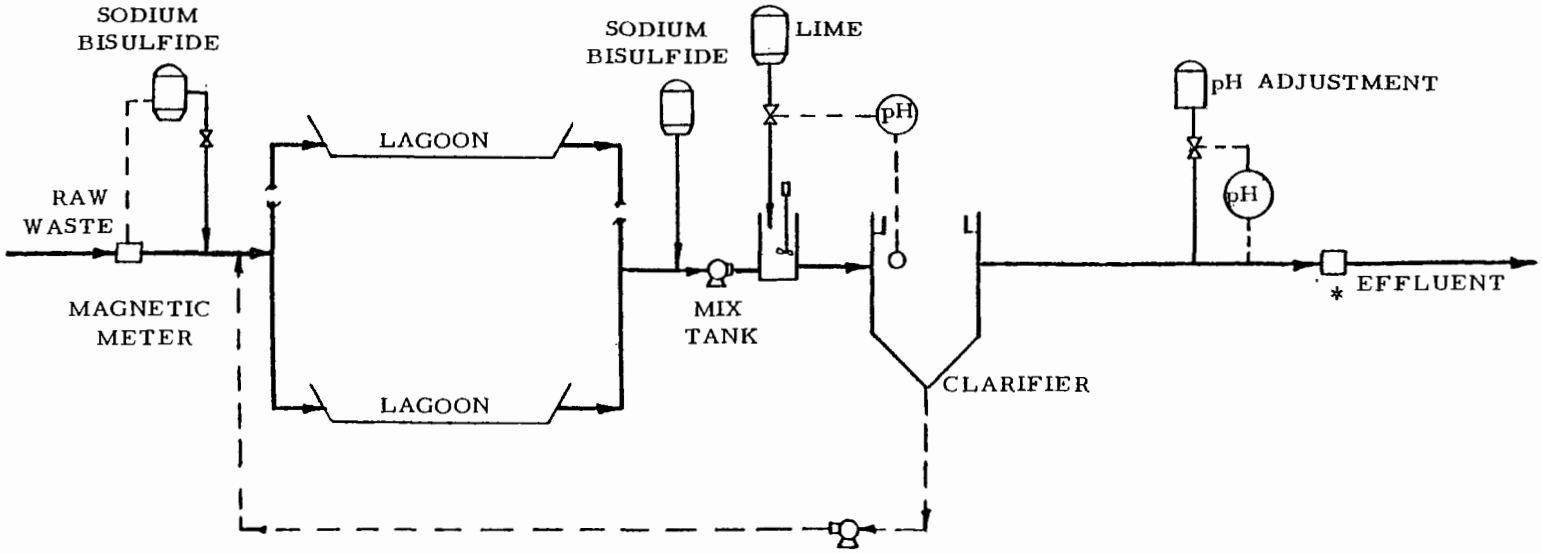

*Includes flow monitoring, pH monitoring and sampler.

Figure 18-4. Waste water treatment Level 1 for sodium dichromate subcategory.

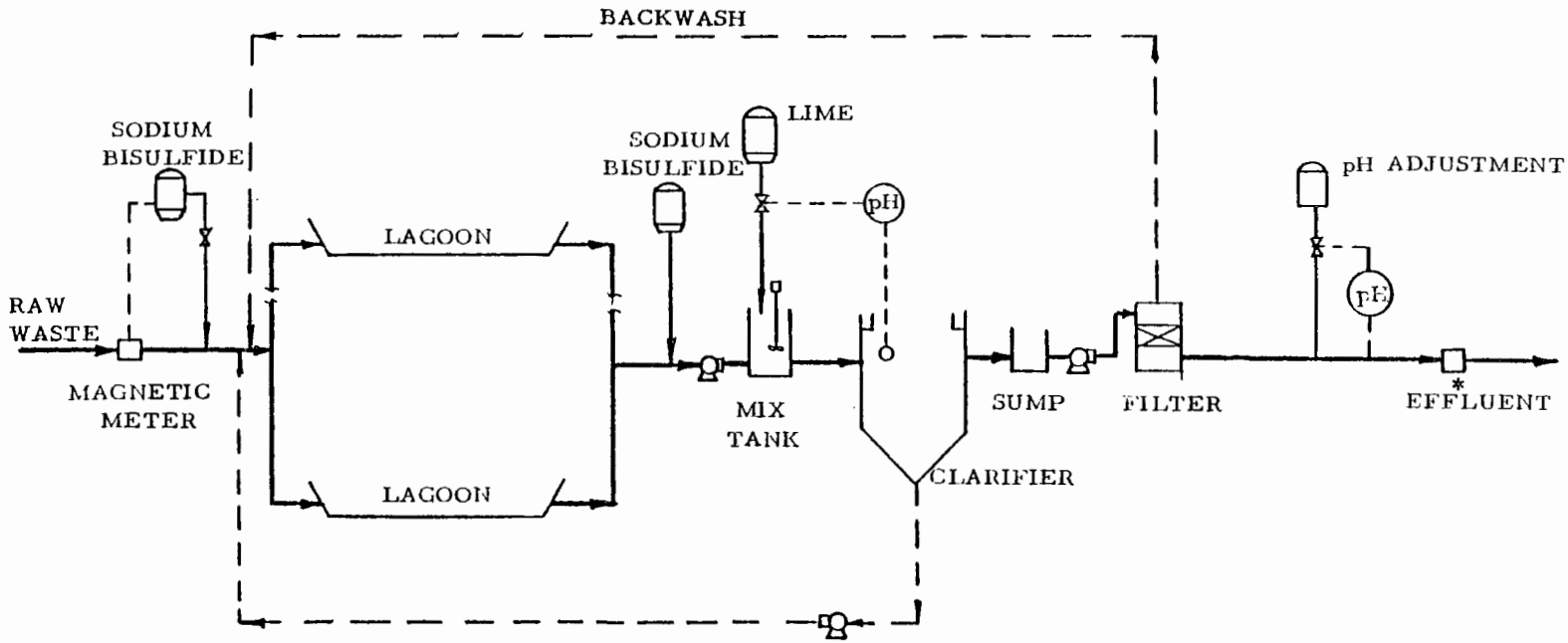

*Includes flow monitoring, pH monitoring and sampler.

Figure 18-5. Waste water treatment Level 2 for sodium dichromate subcategory.

chromium and that total chromium in the final effluent does not exceed the allowable limit. Periodic composite effluent samples should be analyzed for total chromium by the atomic absorption method, for official reporting purposes.

18.2.2 Estimated Performance of BPT Systems

Extensive recycle and reuse of process contact waste water limit effluent generation at sodium dichromate plants. At two facilities, cooling water blowdown streams are used to slurry spent ore residues and the resultant waste stream is treated for the removal of chromium prior to discharge. At the remaining plant, ore residues are removed as a solid waste and only once through noncontact cooling water is discharged.

Table 18-9 summarizes effluent control and treatment technologies at each plant and indicates the characteristics of the resulting effluents. It can be noted that the cooling water at plant #398 is contaminated with chromium. Low concentrations and high discharge volume account for the high chromium effluent loads.

Raw waste priority pollutants found in excess of cutoff limits at these three facilities were presented in Section 6. By use of the compressed scale method for selecting pollutants which might require regulation, chromium, nickel and zinc were identified. Table 18-10 presents priority pollutant effluent loads found during sampling at two of the three facilities.

BPT technology has been specified as reduction of hexavalent chromium, and hydroxide precipitation of chromium with final settling to remove suspended solids.

Base Level Performance Characteristics for BPT Pollutant Removal

Pollutant reductions achievable by application of BPT or Level 1 technology are presented in Table 18-11.

Base Level Performance Characteristics for Priority Pollutant Removal

Table 18-11 also presents effluent quality achievable through the application of BPT or Level 1 technology for the reduction of priority pollutants.

Pretreatment Applications

No sodium dichromate plant presently discharges waste to a

TABLE 18-9. EFFLUENT CONTROL AND TREATMENT PRACTICES AND ACHIEVEMENTS AT SODIUM DICHROMATE PLANTS*

Plant	Control and Treatment Practice	pH	Effluent Waste Load kg/kkg Cr_T Avg.	Cr_T Max.	Cr^{+6} Avg.	Cr^{+6} Max.	TSS Avg.	TSS Max.
#398	Once through cooling water, disposal of ore residue as solid, no treatment of cooling water discharge	6.6 to 8.5			0.0079	0.034		
#493	Recirculate cooling water, slurry ore residue, treat all wastes with pickle liquor, counter-current solids wash, clarify and filter effluent	6.3 to 8.3	0.00038	0.0049		0.00018	0.1	0.3
#376	Recirculate cooling water, slurry or residue, treat all wastewater with sodium sulfide, remove solids in settling ponds		0.00058	0.0017		0.00058	0.047	0.69

* See Reference 3.

TABLE 18-10. VERIFICATION SAMPLING OF SODIUM DICHROMATE PLANTS

Pollutant	Plant #398* Treated Effluent kg/kkg	Plant #493 Raw Waste kg/kkg	Plant #493 Treated Effluent mg/l	Plant #493 Treated Effluent kg/kkg
Total Suspended Solids, TSS	2.05	140	2	0.0075
Chromium VI, Cr^{+6}	43.9	2.64	0.004	0.000016
Chromium, Cr	**	0.95	2.5	0.0094
Nickel, Ni	0.049	0.047	0.090	0.00034
Zinc, Zn	0.0009	0.002	0.110	0.00041
Copper, Cu	0.013	0.00005	0.016	0.00006
Flow (m^3/kkg)	584	3.8		

* No treatment, only cooling water outfalls.

** Less than supply water of 0.495 mg/l.

TABLE 18-11 CONTROL PARAMETER LIMITATIONS
SUBCATEGORY: Sodium Dichromate
Level of Treatment: 1
Waste Water Flow: 7 m3/kkg

Pollutant	Subcategory Performance (mg/l)	(1) VFR	Quality Limit (mg/l)		Emission Limit (kg/kkg)	
			30 day Aver	24 hr Max	30 day Aver	24 hr Max
BPT Pollutants:						
Total Suspended Solids, TSS	12	2.0	35	70	0.26	0.52
Total Chromium, Cr	0.05	2.0	0.5	1.0	0.0035	0.007
Hexavalent Chromium, Cr+6	0.01 (2)	2.0	0.1	0.2	0.0008	0.0016
Proposed Priority Pollutants						
Nickel, Ni	0.2 (2)	2.0	0.5	1.0	0.0035	0.007
Zinc, Zn	0.1 (2)	2.0	0.5	1.0	0.0035	0.007

(1) - VFR: ratio of the 24 hour variability factor to the 30 day variability factor.

(2) - Verification Sampling

POTW. Future discharges can readily be treated to BPT levels and this standard should be adopted for pre-treatment requirements.

18.2.3 Estimated Performance of Advanced Level Systems

Advanced Level Performance Estimates for BPT and Priority Pollutant Removal

Necessary to the achievement of good effluent quality after precipitation of heavy metals, is the control of suspended solids. In the Sodium Dichromate Subcategory, it can be assumed that chromium is a significant constituent in the suspended solids discharged. For this reason, only one advanced treatment alternative, addition of a filtration unit for solids control, has been recommended.

Table 18-12 presents the estimated achievable effluent quality through the implementation of this advanced technology.

New Source Applications

Examination of current control and treatment practices in this subcategory has led to the conclusion that NSPS for sodium dichromate plants should represent the application of the advanced recycle technology currently practiced at one facility.

Response to Remand Issues

The zero discharge requirement originally promulgated as BAT for sodium dichromate production was remanded on the basis of inadequate technical and economic justification for the evaporative technology required to eliminate discharge. A control and treatment alternative, which allows waste water discharge, has been identified and the performance levels achievable have been demonstrated at one facility.

18.2.4 Cost Estimates

Discussion

The cost estimates of three models having different production levels are presented in Tables 18-13, 18-14, and 18-15. Annual treatment costs as a function of production are shown graphically in Figure 18-6. Treatment cost per metric ton of product is shown in Figure 18-7.

TABLE 18-12 CONTROL PARAMETER LIMITATIONS
SUBCATEGORY: Sodium Dichromate
Level of Treatment: 2
Waste Water Flow: 7 m3/kkg

Pollutant	Treatability (mg/l)	(1) VFR	Quality Limit (mg/l)		Emission Limit (kg/kkg)	
			30 day Aver	24 hr Max	30 day Aver	24 hr Max
BPT Pollutants:						
Total Suspended Solids, TSS	15	2.0	15	30	0.10	0.21
Total Chromium, Cr	0.3	2.0	0.2	0.4	0.0014	0.0028
Hexavalent Chromium, Cr+6	0.1	2.0	0.1	0.2	0.0008	0.0016
Proposed Priority Pollutants						
Nickel, Ni	0.1	2.0	0.1	0.2	0.0007	0.0014
Zinc, Zn	0.4	2.0	0.4	0.8	0.003	0.006

(1) - VFR: ratio of the 24 hour variability factor to the 30 day variability factor.

TABLE 18-13. MODEL PLANT TREATMENT COSTS

Subcategory	SODIUM DICHROMATE	Type of Regulation BAT
Production	20,000 metric tons per year (22,050 tons per year) 57 metric tons per day (63 tons per day)	
Waste water flow	400 cubic meters per day.	

	LEVEL OF TREATMENT*	
	FIRST	SECOND
A. INVESTMENT COST		
Construction	$615,250	$4,700
Equipment in place, including piping, fittings, electrical work and controls.....	168,500	33,200
Monitoring equipment in place.....	9,000	
Engineering design and inspection.....	158,550	7,580
Incidentals, overhead, fees, contingencies...	158,550	7,580
Land.....	156,000	
TOTAL INVESTMENT COST	$1,265,850	$53,060
B. OPERATION AND MAINTENANCE COST		
Labor and supervision.	$56,000	$14,000
Energy.....	2,500	600
Chemicals.....	17,000	
Maintenance.....	110,985	5,306
Taxes and insurance...	37,975	1,591
Residual waste disposal.....		
Monitoring, analysis and reporting.....	15,000	7,500
TOTAL OPERATION AND MAINTENANCE COST	$239,460	$28,997
C. AMORTIZATION OF INVESTMENT COST	$180,572	$8,632
TOTAL ANNUAL COST	$420,032	$37,629

*First level represents the base cost of treatment system. Other levels represent the incremental cost above base cost.

TABLE 18-14. MODEL PLANT TREATMENT COSTS

Subcategory SODIUM DICHROMATE — Type of Regulation BAT

Production 50,000 metric tons per year (55,125 tons per year)
142 metric tons per day (157 tons per day)
Waste water flow 1000 cubic meters per day.

	LEVEL OF TREATMENT*	
	FIRST	SECOND
A. INVESTMENT COST		
Construction	$1,375,800	$8,600
Equipment in place, including piping, fittings, electrical work and controls.....	302,500	80,500
Monitoring equipment in place.....	7,000	
Engineering design and inspection.....	337,060	17,820
Incidentals, overhead, fees, contingencies...	337,060	17,820
Land.....	252,000	
TOTAL INVESTMENT COST	$2,611,420	$124,740
B. OPERATION AND MAINTENANCE COST		
Labor and supervision.	$56,000	$14,000
Energy.....	2,800	1,000
Chemicals.....	42,000	
Maintenance.....	235,942	12,474
Taxes and insurance...	78,342	3,742
Residual waste disposal.....		
Monitoring, analysis and reporting.....	15,000	7,500
TOTAL OPERATION AND MAINTENANCE COST	$430,084	$38,716
C. AMORTIZATION OF INVESTMENT COST	$383,877	$20,295
TOTAL ANNUAL COST	$813,961	$59,011

*First level represents the base cost of treatment system. Other levels represent the incremental cost above base cost.

TABLE 18-15. MODEL PLANT TREATMENT COSTS

Subcategory SODIUM DICHROMATE — Type of Regulation BAT

Production 70,000 metric tons per year (77,175 tons per year)
200 metric tons per day (220 tons per day)

Waste water flow 1400 cubic meters per day.

	LEVEL OF TREATMENT*	
	FIRST	SECOND
A. INVESTMENT COST		
Construction	$1,742,950	$12,200
Equipment in place, including piping, fittings, electrical work and controls.....	390,500	91,500
Monitoring equipment in place.....	9,000	
Engineering design and inspection.....	428,490	20,740
Incidentals, overhead, fees, contingencies...	428,490	20,740
Land.....	324,000	
TOTAL INVESTMENT COST	$3,323,430	$145,180
B. OPERATION AND MAINTENANCE COST		
Labor and supervision.	$56,000	$14,000
Energy.....	2,800	1,000
Chemicals.....	58,000	
Maintenance.....	299,943	14,518
Taxes and insurance...	99,702	4,355
Residual waste disposal.....		
Monitoring, analysis and reporting.....	15,000	7,500
TOTAL OPERATION AND MAINTENANCE COST	$531,445	$41,373
C. AMORTIZATION OF INVESTMENT COST	$488,007	$23,620
TOTAL ANNUAL COST	$1,019,452	$64,993

*First level represents the base cost of treatment system. Other levels represent the incremental cost above base cost.

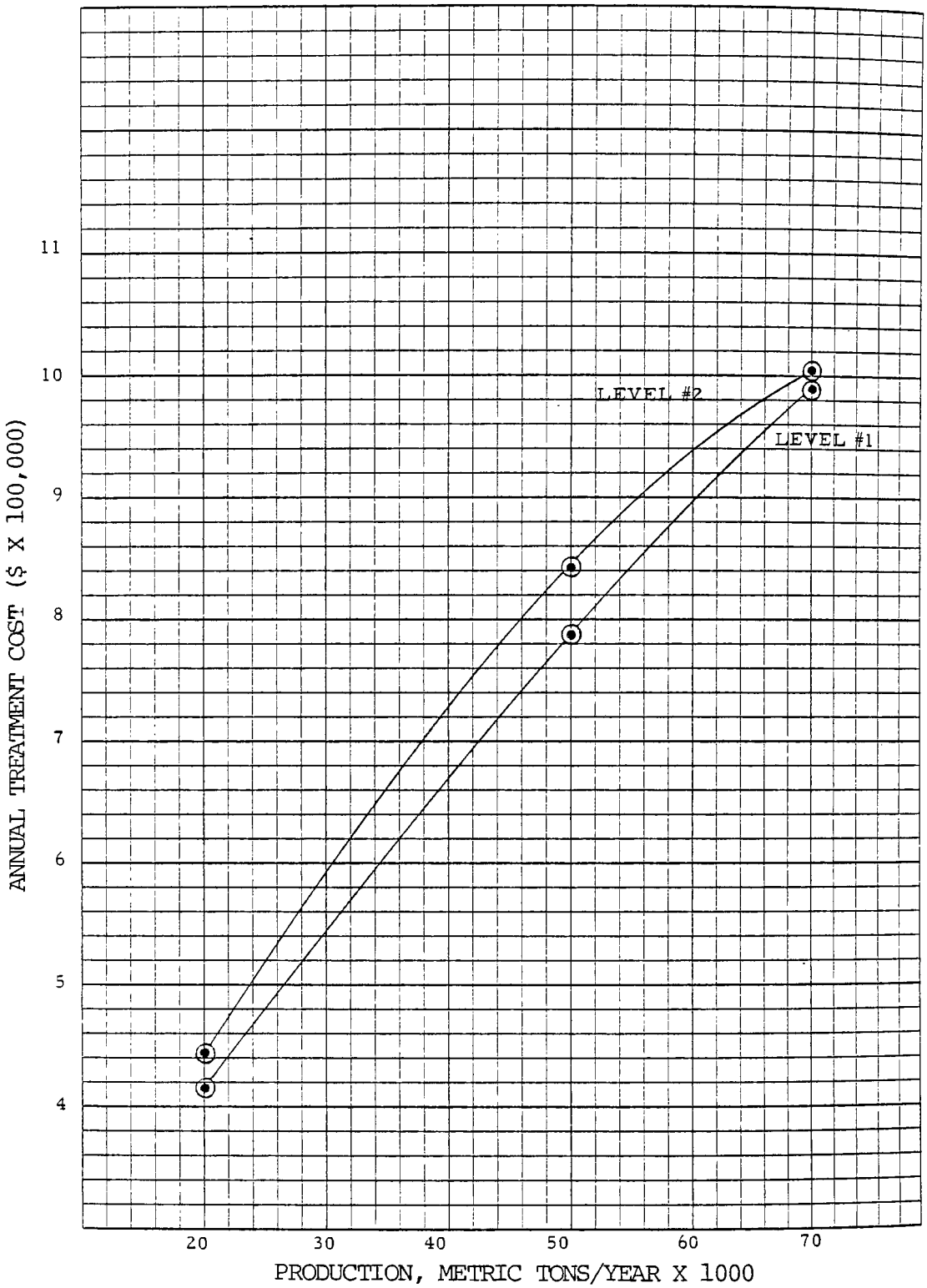

Figure 18-6. Relationship of annual treatment cost to production for the Sodium Dichromate Subcategory

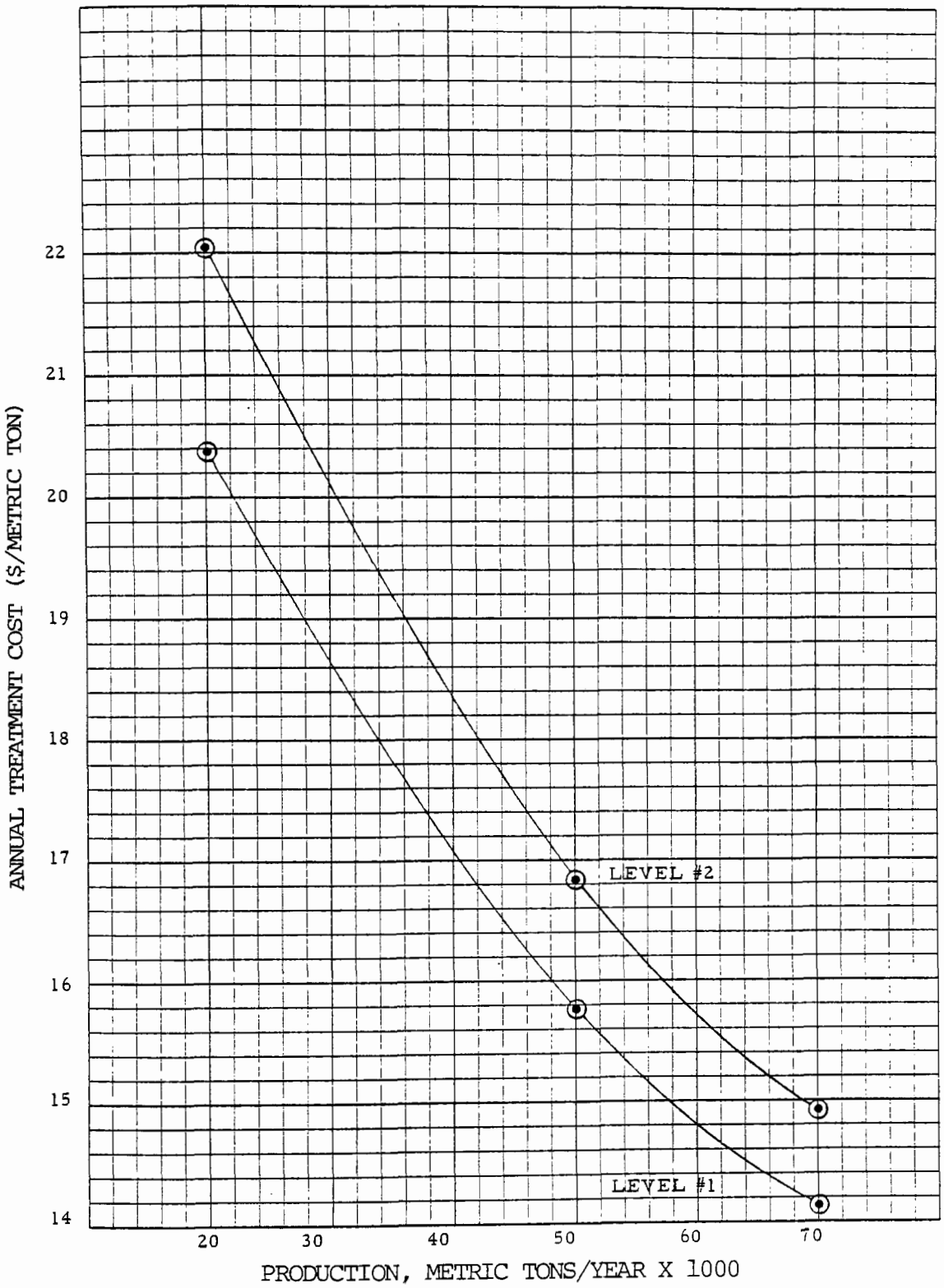

Figure 18-7. Relationship of annual unit treatment cost to production for the Sodium Dichromate Subcategory

Table 18-16 gives a summary of the unit cost distribution between amortization and the operation and maintenance cost components at various production and levels of treatment.

Summary

At the first level of treatment, investment costs are high because sludge lagoons costs are provided for a ten year period. Therefore, amortization is the major portion of the total annual costs. In place of annual cost for the residual waste (sludge) disposal, a large investment in land is shown. At the second level of treatment, labor and amortization have significant impact on the additional annual costs.

TABLE 18-16 MODEL PLANT TREATMENT COSTS

Subcategory SODIUM DICHROMATE Type of Regulation BAT

			Annual Treatment Costs ($/kkg)			
			LEVEL OF TREATMENT			
	PRODUCTION (kkg/yr)	FLOW (m3/day)	FIRST $	SECOND $	THIRD $	FOURTH $
Annual Operation and Maintenance	20,000	400	11.97	1.45	Not Applicable	
	50,000	1,000	8.60	0.77		
	70,000	1,400	7.59	0.59		
Annual Amortization	20,000	400	9.03	0.43		
	50,000	1,000	7.68	0.41		
	70,000	1,400	6.97	0.34		
Total Cost	20,000	400	21.00	1.88		
	50,000	1,000	16.28	1.18		
	70,000	1,400	14.56	0.93		

SECTION 19

CARBON DIOXIDE INDUSTRY

19.1 ASSESSMENT OF THE WATER POLLUTION POTENTIAL

19.1.1 Industry Profile and Analytical Results

Carbon dioxide is produced in gaseous, liquid or solid form.

A major portion of the production is used captively for the production of urea and for the secondary recovery of oil and natural gas. It is also used for refrigeration, in the food industry, for the carbonation of beverages, in fire extinguishing equipment, and oil well stimulation.

The industrial data profile for this subcategory is given in Table 19-1, while existing regulations are summarized in Table 19-2.

The only priority pollutant found at a significant concentration in the raw waste during screening at Plant #241 was:

Pollutant	Concentration (ug/l)
Zinc	910

When the data was reviewed with plant personnel, it was discovered that the high zinc level was due to zinc corrosion inhibitors and were not process related. Therefore, this subcategory has been recommended as an exclusion candidate under Paragraph 8.

TABLE 19-1. - SUBCATEGORY PROFILE DATA SUMMARY

SUBCATEGORY	CARBON DIOXIDE
Total subcategory capacity rate	12,194,000 kkg/year
Total subcategory production rate	1,819,000 kkg/year
Number of plants in this subcategory	105
308 Data on file for	12
With total capacity of	713,947 kkg/year
With total production of	558,667 kkg/year
Representing capacity	59 percent
Representing production	31 percent
Plant production range:	
Minimum	1,600 kkg/year
Maximum	155,000 kkg/year
Average production	
Median production	
Average capacity utilization	
Plant age range:	
Minimum	6 years
Maximum	50 years
Wastewater flow range:	
Minimum	
Maximum	
Volume per unit product:	
Minimum	
Maximum	

Sources of data are Stanford Research Institute, Directory of Chemical Producers, U.S.A., 1977, U.S. Department of Commerce, Current Industrial Reports, December 1977; Energy and Environmental Analysis, Inc.; Draft Report, "Preliminary Economic Assessment of Effluent Limitations in the Inorganic Chemical Industry."

TABLE 19-2 - EXISTING REGULATIONS - EFFLUENT LIMITATION GUIDELINES

SUBCATEGORY Carbon Dioxide

SUBPART AF (40CFR 415.320, 5/22/75)

		STANDARDS					
		BPCTCA		BATEA		NSPS	
Product Process	Parameters	Max.[1] kg/kkg (mg/l)	Avg.[2] k/kkg (mg/l)	Max. k/kkg (mg/l)	Avg. k/kkg (mg/l)	Max. k/kkg (mg/l)	Avg. k/kkg (mg/l)
CO_2	Reserved	Reserved		Reserved		Reserved	

[1]Max. = Maximum of any one day.

[2]Avg. = Average of daily values for thirty consecutive days shall not exceed.

SECTION 20

CARBON MONOXIDE AND BY-PRODUCT HYDROGEN INDUSTRY

20.1 ASSESSMENT OF THE WATER POLLUTION POTENTIAL

20.1.1 Industry Profile and Analytical Results

In the production of hydrogen by refining natural gas, carbon monoxide is also produced. Carbon monoxide is recovered from several gas sources including partial combustion of oil or natural gas, coke oven gas, blast furnace gas, water gas, and methane reformer gas.

Carbon monoxide and by-product hydrogen form the building blocks for other chemicals such as ammonia and methanol. The major use of carbon monoxide is for the manufacture of methanol.

It is also used as a gaseous fuel for reducing oxides for special steels, and nickel refining. Carbon monoxide is used in the manufacture of ammonia, acetic acid, and zinc white pigments.

The industrial profile data for this subcategory is given in Table 20-1, while existing regulations are summarized in Table 20-2.

Priority pollutants found at significant levels in the raw waste during screening at Plant #981 were:

Pollutant	Concentration (ug/l)
Chromium	2590
Zinc	820
Silver	1.4
Mercury	1.2

The only pollutants of significance in terms of waste loads, in the carbon monoxide subcategory are chrome and zinc. However, this is the result of the use additives in cooling water to inhibit corrosion, and is not process related. Therefore this subcategory has been recommended as a Paragraph 8 exclusion candidate.

TABLE 20-1 - SUBCATEGORY PROFILE DATA SUMMARY

SUBCATEGORY	CARBON MONOXIDE AND BY-PRODUCT HYDROGEN
Total subcategory capacity rate	
Total subcategory production rate	277,200 kkg/year
Number of plants in this subcategory	5
308 Data on file for	5
With total capacity of	
With total production of	112,400 kkg/year
Representing capacity	
Representing production	40 percent
Plant production range:	
Minimum	47 kkg/year
Maximum	63,000 kkg/year
Average production	
Median production	
Average capacity utilization	
Plant age range:	
Minimum	8 years
Maximum	19 years
Wastewater flow range:	
Minimum	
Maximum	
Volume per unit product:	
Minimum	
Maximum	

Sources of data are Stanford Research Institute, Directory of Chemical Producers, U.S.A., 1977, U.S. Department of Commerce, Current Industrial Reports, December 1977; Energy and Environmental Analysis, Inc.; Draft Report, "Preliminary Economic Assessment of Effluent Limitations in the Inorganic Chemical Industry."

TABLE 20-2 - EXISTING REGULATIONS - EFFLUENT LIMITATION GUIDELINES

SUBCATEGORY Carbon Monoxide and By-Product Hydrogen

SUBPART AG (40CFR 415.330, 5/22/75)

		STANDARDS					
		BPCTCA		BATEA		NSPS	
Product Process	Parameters	Max.[1] kg/kkg (mg/l)	Avg.[2] k/kkg (mg/l)	Max. k/kkg (mg/l)	Avg. k/kkg (mg/l)	Max. k/kkg (mg/l)	Avg. k/kkg (mg/l)
CO and H_2	COD	0.5 (81.3)*	0.25 (40.7)				
	TSS	0.12 (19.5)	0.06 (9.8)				

[1]Max. = Maximum of any one day.

[2]Avg. = Average of daily values for thirty consecutive days shall not exceed.

*flow basis 6150 l/kkg.

SECTION 21

COPPER SULFATE INDUSTRY

21.1 ASSESSMENT OF THE WATER POLLUTION POTENTIAL

21.1.1 Industry Profile and Analytical Results

Most of the copper sulfate produced is sold in the merchant market, consequently captive use is very small. Copper sulfate is used in agriculture as an insecticide and algicide, and as an addition to copper-deficient soils. It is also used in electroplating and in petroleum refining, and as a preservative for wood.

The industrial profile data for this subcategory is given in Table 21-1, while existing regulations are summarized in Table 21-2.

Priority pollutants found at significant concentrations in the raw waste during screening at Plant #034 were as follows:

Pollutant	Concentration (ug/l)
Antimony	307
Arsenic	3500
Cadmium	870
Copper	1,850,000
Lead	175
Nickel	112000
Zinc	11000
1,1,1-trichloroethane	244

A large portion of the raw waste water at this plant consists of ground water which seeps and collects in the basement, along with leaks and washdown water from the process. The ground water is contaminated from the surrounding area which is heavily industrialized. The trichloroethane is presumed to be external contamination.

A summary of daily and unit product raw waste loads for the plant sampled can be found in Table 21-3. No verification

TABLE 21-1 - SUBCATEGORY PROFILE DATA SUMMARY

SUBCATEGORY	COPPER SULFATE
Total subcategory capacity rate	
Total subcategory production rate	37,000 kkg/year
Number of plants in this subcategory	18
308 Data on file for	10
With total capacity of	32,218 kkg/year
With total production of	28,960 kkg/year
Representing capacity	
Representing production	78 percent
Plant production range:	
Minimum	45 kkg/year
Maximum	9,100 kkg/year
Average production	2,020 kkg/year
Median production	510 kkg/year
Average capacity utilization	50 percent
Plant age range:	
Minimum	3 years
Maximum	52 years
Wastewater flow range:	
Minimum	0 cubic meters/day
Maximum	28 cubic meters/day
Volume per unit product:	
Minimum	<0.1 cubic meter/kkg
Maximum	2.1 cubic meter/kkg

Sources of data are Stanford Research Institute, Directory of Chemical Producers, U.S.A., 1977, U.S. Department of Commerce, Current Industrial Reports, December 1977; Energy and Environmental Analysis, Inc.; Draft Report, "Preliminary Economic Assessment of Effluent Limitations in the Inorganic Chemical Industry."

TABLE 21-2 - EXISTING REGULATIONS - EFFLUENT LIMITATION GUIDELINES

SUBCATEGORY Copper Sulfate

SUBPART AJ (40CFR 415.360, 5/22/75)

		STANDARDS					
		BPCTCA		BATEA		NSPS	
Product Process	Parameters	Max.[1] kg/kkg (mg/l)	Avg.[2] k/kkg (mg/l)	Max. k/kkg (mg/l)	Avg. k/kkg (mg/l)	Max. k/kkg (mg/l)	Avg. k/kkg (mg/l)
Pure Raw Materials Process	Cu	0.0006	0.0002				
Recovery Process	TSS	0.069 (74.2)*	0.023 (24.7)				
	Cu	0.003 (3.2)	0.001 (1.1)				
	Ni	0.006 (6.5)	0.002 (2.2)				
	Se	0.0015 (1.6)	0.0005 (0.5)				

[1]Max. = Maximum of any one day.

[2]Avg. = Average of daily values for thirty consecutive days shall not exceed.

*flow basis 930 l/kkg.

TABLE 21-3. SUMMARY OF RAW WASTE LOADINGS FOUND AT COPPER SULFATE PLANT #03

Pollutant	Loadings kg/day Average	Loadings kg/kkg Average
Priority		
Antimony, Sb	0.014	0.00069
Arsenic, As	0.16	0.0078
Cadmium, Cd	0.039	0.0019
Copper, Cu	83.9	4.11
Lead, Pb	0.0079	0.00039
Nickel, Ni	5.08	0.25
Zinc, Zn	0.50	0.024
Conventional		
TSS	1.78	0.087

sampling was performed in this subcategory because no additional plants with single product waste streams could be identified.

Based on the total annual production rate of this subcategory and the average waste load generated per unit product, the estimated total pollutant raw waste loads generated each year for this subcategory are as follows:

Pollutant	Waste Load (kg/year)
Antimony	25.5
Arsenic	287
Cadmium	70
Copper	152,070
Lead	14.5
Nickel	9,250
Zinc	888

21.1.2 Process Waste Sources and Waste Water Treatment Data

General Process Description

Raw material and process - Copper sulfate is produced by reacting copper shot (blister copper) with sulfuric acid, air, and water. The general reaction is:

$$Cu + 1/2\ O2 + H2S04 = CuS04 + H20 \quad (1)$$

Some plants do not start with copper metal but use a waste stream from copper refineries which consists of copper, sulfuric acid, and a small amount of nickel. The solution needs to be strengthened by the addition of more copper but the same general equation applies.

The resulting copper sulfate solution is either sold or fed to crystallizers producing copper sulfate crystals. These are centrifuged, dried, screened, and then packaged dry for sale.

Water Use and Waste Source Inventories

Water uses - Water is used in the process as a reaction component which becomes a part of the dry product as its water of crystallization. Water is also used for noncontact cooling, pump seals, and washdowns. Table 21-4 gives a summary of plant water usages.

TABLE 21-4 - WATER USAGE IN COPPER SULFATE SUBCATEGORY

Plant	Process Contact m^3/kkg	Noncontact Cooling m^3/kkg	Pump, seals, washdown leaks, etc...m^3/kkg
# 284	1.210	0	0.346
# 313	24.76	37.29	0.278
# 069	4.35	138.4	4.96
# 571	0.150	0	0.033
# 885	2.11	0	Nil
# 458	3.59	0	Nil
# 100	1.28	0	Nil
# 969	1.28	0	Nil
# 050	1.28	0	Nil

Waste Sources

A. Noncontact cooling water is used in the crystallizers and constitutes one of the main wastes. This waste is treated before final discharge.

B. Washdowns, spills, and leaks are sources of contact waste water, but the flows are relatively small and intermittant, and do not represent a major waste source.

C. A few plants use evaporators, and steam condensate is an additional noncontact waste formed in the process.

D. Solid waste is produced by some plants. The copper metal used in the process contains copper sulfides, which are filtered out of the liquor and disposed of in a landfill.

Plants that produce copper sulfate in the liquid form have no contact waste streams from the process. The copper metal, acid, and water are reacted together to form the copper sulfate solution product with no generation of liquid wastes.

Control and Treatment Practices

Treatment practices - Plant #034 uses lime neutralization followed by filtration. The filtrate is discharged to a sewer and the filter cake is hauled to a landfill.

Plant #284 practices lime neutralization with aeration and clarification.

Plant #069 has neutralization and equalization treatment before the waste is discharged to a sewer.

Plant #313 uses lime precipitation at pH 10 followed by gravity separation and centrifugation to thicken the sludge. The waste is then neutralized to pH 6.5-7.5 and discharged. Plants #100, #969, #050, #458, #885 and #571 have no treatment.

Description of Plants Visited and Sampled

Plant #034 was the only plant visited and sampled. This was done during screening and no verification sampling was conducted for this subcategory.

The waste from the plant drains into a sump from which it is pumped to two neutralization tanks where lime is added. The waste is then run through a filter press and the filter residue is hauled to a landfill disposal site. The filtrate is mixed

with noncontact cooling water and steam condensate in a collection tank. The wastes are then passed through a cloth filter for final polishing and discharged to a sewer. Figure 21-1 shows the process flow and sampling points for this plant. Table 21-5 gives the waste flows and classical pollutant emissions.

Evaluation of Production and Waste Water Flow Data

Table 21-5 shows that the treatment efficiency for copper removal is above 99.5 percent at Plant #034. All other copper sulfate plants treat their wastes with other process wastes or they have no wastes. This plant was the only plant visited for those reasons.

Process Modifications and Technology Transfer Options

Mechanical scrapers should be installed on filters in plants using impure raw materials. This would eliminate the need for backwashing so no waste water would be produced. Solids wastes would still have to be disposed. Installation of these scrapers would constitute a small capital cost.

Best Management Practices

The best technology available for the treatment of copper sulfate waste, where pure copper is used as the raw material, is total recycle of process waste. This would require floor dikes, plumbing and sumps, and mother liquor recycle pumping and piping.

The best technology for waste treatment where copper sulfate is prepared from copper refinery by-product is collection of waste mother liquor and process spills, washdowns, etc., followed by lime precipitation of metal ions with settling of suspended solids and filtration. This would require installing dykes, sewers, a treatment tank, a settling tank, filter presses, and associated piping and pumping (2).

Model Plant and BPT Level Treatment System Specifications

Production - Copper sulfate production ranges from 18900 kkg/yr to 189000 kkg/yr in plants for which 308 Questionnairies were available. The average of the ten plants is 73710 kkg/yr. The operational mode for all these plants is assumed to be batch and to run 250 days per year.

Waste water flow - The waste water flow used for the model plant was 0.9 m3/kkg of copper sulfate. Plant #748 has a waste

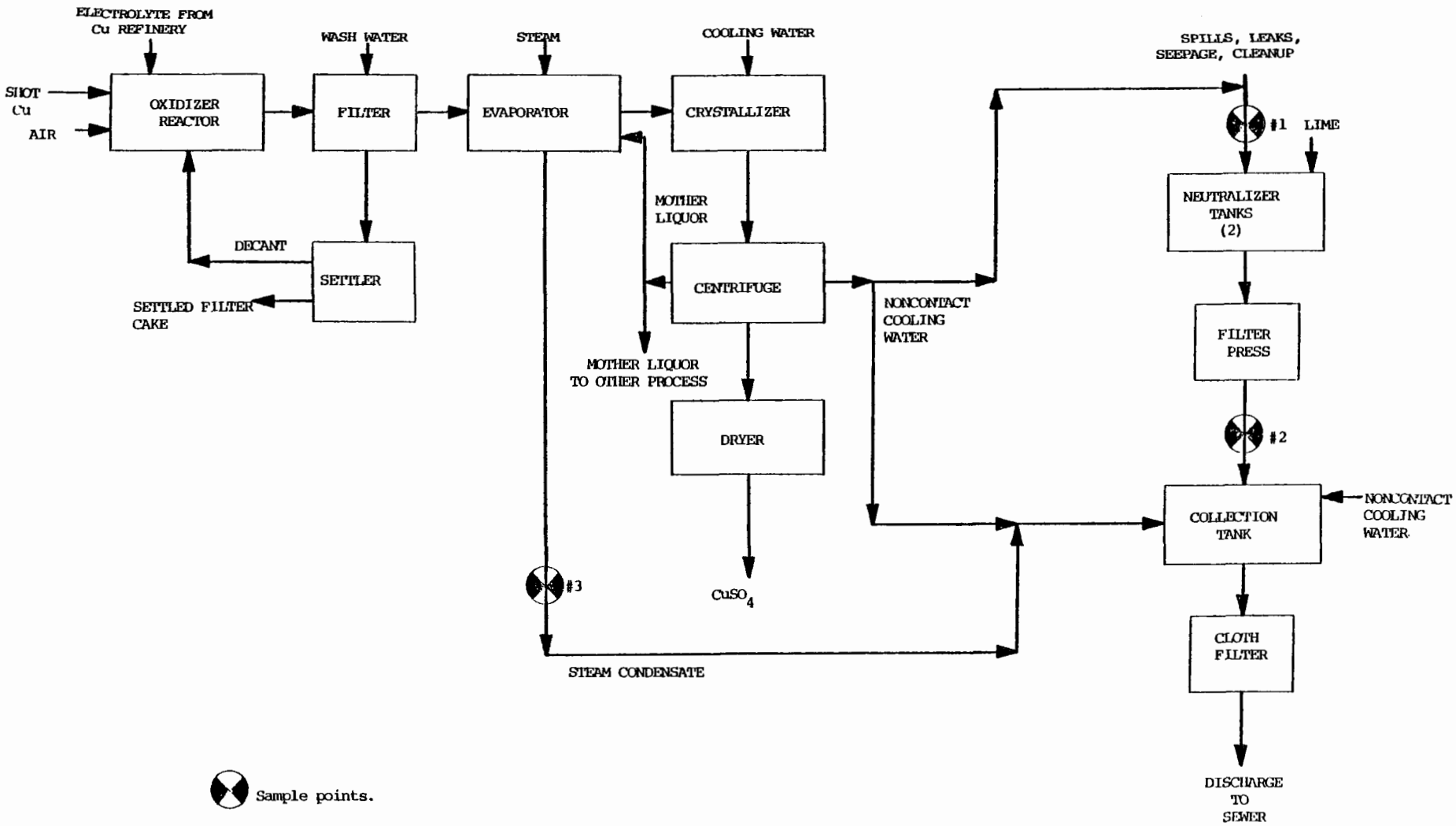

Figure 21-1. General process flow diagram at Plant #034 showing the sampling points. Copper Sulfate Manufacture

TABLE 21-5. FLOW AND POLLUTANT CONCENTRATION DATA OF THE SAMPLED WASTE STREAMS FOR PLANT #034 PRODUCING COPPER SULFATE

Waste Stream Description	Flow m^3/kkg	TSS kg/kkg	Phenol kg/kkg	Cu kg/kkg	Ni kg/kkg
$CuSO_4$ waste*	2.23	0.0862	0.00004	4.11	0.248
Effluent from lime treatment	2.23	0.0769	0.000027	0.0101	-
Steam Condensate	0.371	0.00133	-	0.00167	-

* Infiltration of ground water into the collection sump was suspected at the time of sampling.

flow of 0.52 m3/kkg of copper sulfate. All the other plants combine their wastes with other process wastes or purify the $CuSO_4$ to reagent grade which produces more waste.

Solid wastes - Copper sulfide from filtration is the only solid waste that requires disposal. This waste must be disposed of in a chemical landfill since the solids may contain other contaminants or become oxidized and commence to migrate into the soil or ground water.

Slimes from the mother liquor and copper sulfate solid wastes are all recycled or sent to another facility for precious metal recovery.

Treatment chemicals - Caustic soda is required to precipitate metals and for pH adjustment, usually at pH to 9-10.

For model plants, the assumed caustic soda dosage was 0.33 kg/kkg of copper sulfate, calculated as 350 mg/l in a unit waste flow of .52 m3/kkg of product.

Solids generated - Based on sludge production of 5 lbs/day for 250 days/yr in the model plant, the annual solids production is 340 kg, equivalent to unit solids generation of 0.0046 kg/kkg of product.

21.2 TECHNOLOGY BASED POLLUTION ABATEMENT

21.2.1 Advanced Level Treatment Applications

Priority Pollutants to be Controlled

The priority pollutants found in actual plant waste waters are closely related to the purity of the copper and acid sources. The heavy metals, cadmium, nickel and zinc, which were found during field sampling, may originate as trace impurities in copper scrap. Arsenic was found at one plant in waste water containing floor washings and infiltrated groundwater. A possible source of arsenic, and other copper ore trace metals, is the use of sulfuric acid made from sulfur dioxide produced in the roasting of copper sulfide ore. In any event it appears that copper, arsenic, cadmium, nickel and zinc are typical pollutants encountered in copper sulfate waste waters. Assuming that the material sources may at some time include impure acid, copper scrap and spent electrolyte solutions, the priority pollutants to be controlled are copper, zinc, nickel cadmium and arsenic.

Removal Technologies Available

Copper, nickel, cadmium and zinc can be separated from solution by alkaline precipitation at pH values from 7.2 (copper) to 9.7 (cadmium). Alternatively, sulfide precipitation can be used. These metals can also be removed from clarified solutions by ion exchange, but the metal ions remain on the exchange resins or in the regenerant solutions possibly creating additional disposal problems. Removal of trace metal concentrations by the xanthate process, although possible, has not been widely used. Some reduction of arsenic concentrations at high pH levels has been reported, although the removal mechanism is not clear. More effective arsenic removal would require the addition of ferric chloride during alkaline or sulfide precipitation of the process wastes.

Technology to be Applied at Each Level

BPT Model (Level 1) - Alkaline precipitation using caustic soda in a batch process was chosen as the most effective technology for removal of heavy metals and arsenic. To suit a 40-hour, five-day production schedule the wastes are received in daily batches, and are raised to pH 10, mixed, and settled. At the end of the work week, the batch is filtered and the pH adjusted to between 6 and 9.

Level 2 - Ferrous sulfide is added in the reaction vessel following alkaline precipitation, to increase the precipitation of trace metals.

Flow Diagrams

Level 1 Figure 21-2

Level 2 Figure 21-3

Equipment Functions - At both levels the models are designed for batch operation. Each day's wastes are transferred from holding sumps to a reaction vessel for storage. At the end of a work week the BPT treatment of the accumulated waste consists of adding caustic soda to pH 10, mixing, and applying filter aid while filtering in a filter press. After pH adjustment to the 6 to 9 range, the filter effluent is discharged. In the Level 2 model the equipment remains the same but precipitation is carried out in two steps. Metallic hydroxides are allowed to form and settle in the bottom of the reaction vessel. Then ferrous sulfide is added to the reactor and mixed, to react with residual metals. Following completion of sulfide precipitation, filter

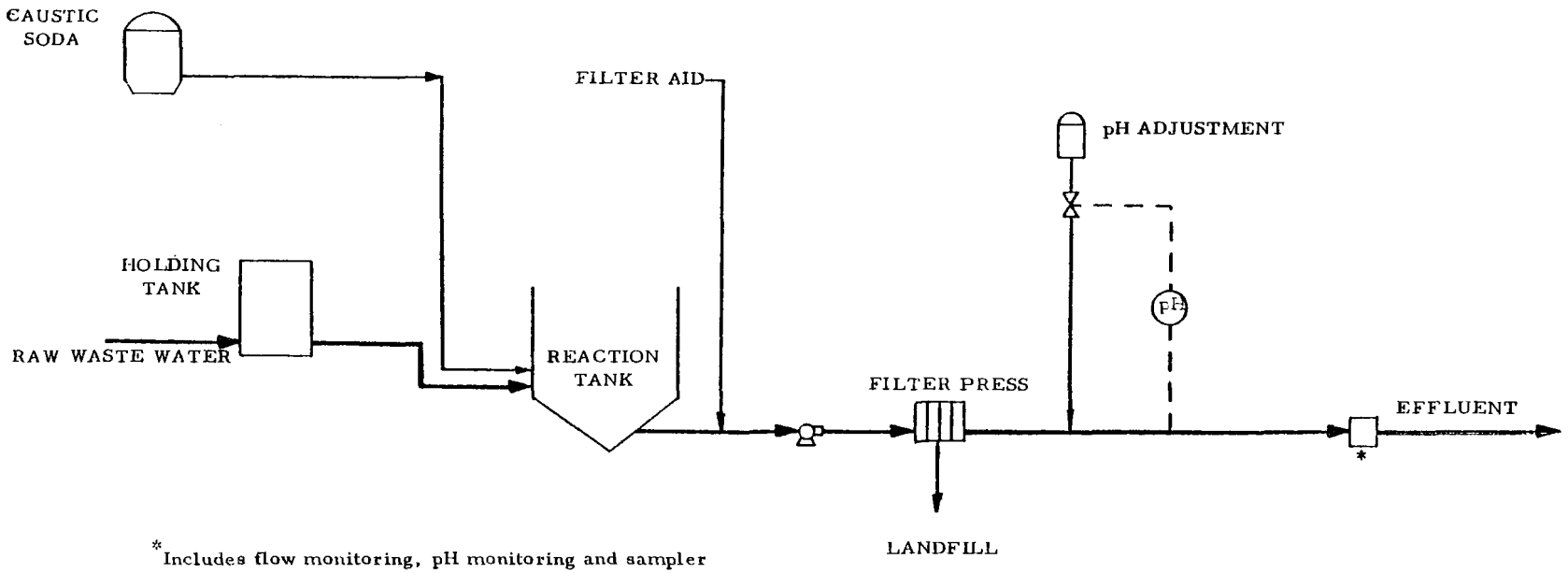

Figure 21-2. Waste water treatment Level 1 for copper sulfate subcategory - batch process.

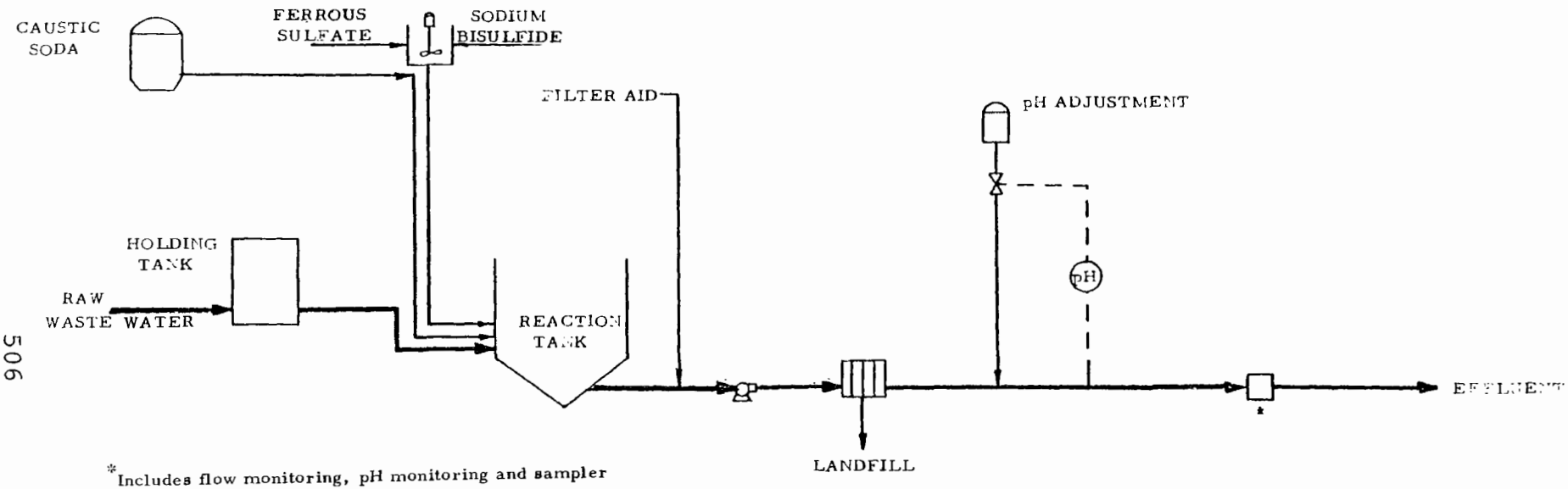

Figure 21-3. Waste water treatment Level 2 for copper sulfate subcategory - batch process.

aid is added while the mixture is being filtered through a filter press. As in Level 1, the pH is adjusted and the filter effluent is discharged until the weekly batch is exhausted.

Chemicals and Handling - Caustic soda solution is added manually to each batch until the proper pH level is reached. In Level 2, batches of ferrous sulfide are prepared by mixing ferrous sulfate and sodium bisulfide in a well-ventilated area. Inert filter aid is applied as a filter precoat and is added continuously during the filtering process. With normal precautions there are no special chemical handling problems in the treatment of copper sulfate wastes.

Separation and Removal of Solids - All solids in both levels are collected as filter cake in the filter press. taken out of service and cleaned. At both levels the dewatered cake containing metallic hydroxides, metallic sulfides, and spent filter aid is hauled to an off-site chemical landfill.

Monitoring Requirements - Alkaline precipitation of the heavy metals is assured by bringing the reaction vessel contents to the proper pH, as determined by the operator, using field pH equipment. Periodic specific analyses of the final effluent for priority pollutants for reporting purposes can be made by atomic absorption methods through a commercial laboratory.

21.2.2 Estimated Performance of BPT Systems

Copper sulfate can be manufactured using pure copper as the raw material or an impure copper raw material. Waste loads emanating from the two sources differ greatly in that total recycle of process wastes can be accomplished at plants using a pure copper source, while at plants using an impure raw material, waste streams need to be removed to some extent to avoid build-up of contaminants in the process.

Based on the process technology of total recycle at plants using a pure raw material, it has been determined that the degree of waste control attainable is no discharge of process wastes.

BPT technology for copper sulfate plants utilizing an impure raw material has been identified as hydroxide treatment to precipitate metals followed by settling and filtration to remove suspended solids. Table 21-6 presents raw wastes and treated effluent quality results from sampling of Plant #034 where treatment consists of lime precipitation and solids removal with a filter press.

TABLE 21-6. VERIFICATION SAMPLING OF COPPER SULFATE PLANT #034

Pollutant	Flow = 2.23 m^3/kkg Raw Waste mg/l	kg/kkg	Treated Effluent * mg/l	kg/kkg
Total Suspended Solids (TSS)	39.2	0.087	35.0	0.078
Copper, Cu	1850	4.1	4.65	0.010
Nickel, Ni	112	0.248	0.240	0.0005
Antimony, Sb	0.33	0.0007	0.036	0.000079
Arsenic, As	3.50	0.0078	< 0.020	0.000044
Cadmium, Cd	0.870	0.0019	0.001	0.000002
Chromium, Cr	0.142	0.00038	0.005	0.00001
Lead, Pb	0.180	0.00039	0.005	0.00001
Selenium, Se	< 0.011	0.000024	0.100	0.00022
Zinc, Zn	11.1	0.025	0.016	0.000035

*Before combining with non-contact cooling and steam condensate streams.

Monitoring Data - Treated Effluent Flow = 3.7 m^3/kkg

	Avg. mg/l	30 day Avg. mg/l	Avg. kg/kkg
Total Suspended Solids, TSS	26	62.4	0.096
Copper, Cu	4.3	6.9	0.016
Nickel, Ni	0.34	0.75	0.0013
Zinc, Zn	0.12	0.29	0.00044
Arsenic, As	0.012	0.041	0.000044
Selenium, Se	0.007	0.043	0.00003

Base Level Performance Characteristics for BPT Pollutant Removal

Based on effluent quality achieved at Plant #034, implementation of BPT technology at copper sulfate plants using an impure raw material will achieve the effluent quality presented in Table 21-7.

Previous regulations included selenium limitations, however, selenium was not found to be a significant pollutant in raw wastes at Plant #034.

Base Level Performance Characteristics for Priority Pollutant Removal

Raw waste priority pollutants found in significant amounts during sampling of Plant #034 were presented above. The additional pollutants which might require regulation were identified as arsenic, cadmium and zinc.

Table 21-7 also presents achievable effluent quality through implementation of BPT technology for these pollutants.

Pretreatment Applications

No copper sulfate plant presently discharges waste to a POTW, however, Plant #034 does plan to discharge to a municipal facility in the future. The toxicity of copper is a concern as it can have a detrimental effect on POTW biota and also can accumulate in municipal sludges. The volume of waste produced by a copper sulfate plant is small enough so that total copper loads discharged following effective BPT treatment can be accepted by large POTW's. However, for general application, pretreatment will require careful waste water volume control.

21.2.3 Estimated Performance of Advanced Level Systems

Advanced Level Performance Estimates for BPT and Priority Pollutants Removal

Only one advanced treatment alternative has been identified for the Copper Sulfate Subcategory. Addition of sulfide before filtration for further removal of copper and other heavy metals is proposed.

Table 21-8 presents estimates achievable effluent quality through implementation of this advanced technology.

TABLE 21-7 CONTROL PARAMETER LIMITATIONS
SUBCATEGORY: Copper Sulfate
Level of Treatment: 3
Waste Water Flow: 0.9 m3/kkg

Pollu	Subcategory Performance (mg/l)	(1) VFR	Quality Limit (mg/l) 30 day Aver	Quality Limit (mg/l) 24 hr Max	Emission Limit (kg/kkg) 30 day Aver	Emission Limit (kg/kkg) 24 hr Max
BPT Pants:						
Totalended Solids	62	2.0	15	30	0.014	0.027
Coppe	6.9	2.0	2.5	5.0	0.0022	0.0045
Nicke	0.7	2.0	0.5	1.0	0.00045	0.0009
Selerse	0.04	2.0	0.1	0.2	0.0001	0.0002
Propriority Pollu						
Arsers	0.04	2.0	0.1	0.2	0.00009	0.00018
Cadmi (2)	0.001	2.0	0.05	0.1	0.00004	0.00009
Zinc	0.3	2.0	0.4	0.8	0.00036	0.00072

(1) R: ratio of the 24 hour variability factor to the 30 day variability factor.

(2) rification Sampling

TABLE 21-8 CONTROL PARAMETER LIMITATIONS
SUBCATEGORY: Copper Sulfate
Level of Treatment: 2
Waste Water Flow: 0.9 m3/kkg

Pollutant	Treatability (mg/l)	VFR (1)	Quality Limit (mg/l)		Emission Limit (kg/kkg)	
			30 day Aver	24 hr Max	30 day Aver	24 hr Max
BPT Pollutants:						
Total Suspended Solids, TSS	15	2.0	15	30	0.014	0.027
Copper, Cu	0.5	2.0	1.0	2.0	0.0009	0.0018
Nickel, Ni	0.2	2.0	0.2	0.4	0.0002	0.0004
Selenium, Se	0.1	2.0	0.1	0.2	0.0001	0.0002
Proposed Priority Pollutants						
Arsenic, As	0.05	2.0	0.05	0.1	0.00004	0.00009
Cadmium, Cd	0.01	2.0	0.01	0.02	0.00001	0.00002
Zinc, Zn	0.2	2.0	0.2	0.4	0.0002	0.0004

(1) - VFR: ratio of the 24 hour variability factor to the 30 day variability factor.

Pretreatment Applications

Only one copper sulfate plant is planning to discharge waste to a POTW following pretreatment. Should further metals removal be required due to the sensitivity of a particular POTW, the application of this advanced technology would then be appropriate.

New Source Application

After examination of the effectiveness of the two treatment technologies applicable to copper sulfate wastes, it has been determined that BPT technology in conjunction with careful waste water volume control in the design and operation of a new copper sulfate facility should achieve effluent quality equivalent to that quality estimated for the advanced technology.

21.2.4 Cost Estimates

Discussion

The cost estimate of one model plant having two levels of treatment and the same level of production at both the levels is presented in Table 21-9. Table 21-10 gives a summary of the unit cost distribution between amortization and operation and maintenance cost components at two levels of treatment.

Summary

Cost estimates developed for the first level of treatment indicate that amortization and labor constitute a major portion of the annual costs. At the second level of treatment there is insignificant change in the annual costs.

TABLE 21-9. MODEL PLANT TREATMENT COSTS

Subcategory	COPPER SULFATE	Type of Regulation BAT
Production	2,045 metric tons per year (2,254 tons per year) 5 metric tons per day (6 tons per day)	
Waste water flow	8 cubic meters per day.	

	LEVEL OF TREATMENT*	
	FIRST	SECOND
A. INVESTMENT COST		
Construction	$9,200	$200
Equipment in place, including piping, fittings, electrical work and controls.....	53,000	1,000
Monitoring equipment in place.....	9,000	
Engineering design and inspection.....	14,240	240
Incidentals, overhead, fees, contingencies...	14,240	240
Land.....	1,200	
TOTAL INVESTMENT COST	$100,880	$1,680
B. OPERATION AND MAINTENANCE COST		
Labor and supervision.	$8,000	
Energy.....	15	
Chemicals.....	1,000	30
Maintenance.....	9,968	168
Taxes and insurance...	3,026	50
Residual waste disposal.....	100	
Monitoring, analysis and reporting.....	2,500	1,250
TOTAL OPERATION AND MAINTENANCE COST	$24,609	$1,498
C. AMORTIZATION OF INVESTMENT COST	$16,217	$273
TOTAL ANNUAL COST	$40,826	$1,771

*First level represents the base cost of treatment system. Other levels represent the incremental cost above base cost.

TABLE 21-10 MODEL PLANT TREATMENT COSTS

Subcategory COPPER SULFATE Type of Regulation BAT

			Annual Treatment Costs ($/kkg)			
			LEVEL OF TREATMENT			
	PRODUCTION (kkg/yr)	FLOW (m3/day)	FIRST $	SECOND $	THIRD $	FOURTH $
Annual Operation and Maintenance	2,045	8	12.03	0.73	Not Applicable	
Annual Amortization	2,045	8	7.93	0.13		
Total Cost	2,045	8	19.96	0.87		

SECTION 22

NICKEL SULFATE INDUSTRY

22.1 ASSESSMENT OF THE WATER POLLUTION POTENTIAL

22.1.1 Industry Profile and Analytical Data

Most of the nickel sulfate produced is sold in the merchant market. The major use of nickel sulfate is in the metal plating industry. It is also used in dyeing and printing fabrics and for producing a patina on zinc and brass.

The industry profile data summary is given in Table 22-1, while existing regulations are summarized in Table 22-2.

Priority pollutants found at significant concentrations in the raw waste during sampling at Plant #369 were as follows:

Pollutant	Maximum Concentration Observed (ug/l)	
	Screening	Verification (2 Plants)
Nickel	175,500	1,115,000
Copper	73,300	355
Chromium	1,300	110
Thallium	21	<3
Lead	55	120
Mercury	4	10
Cadmium	9	160
Selenium	<235	141

A summary of daily and unit product raw waste loads for all plants sampled can be found in Table 22-3. Individual plant raw waste loads per unit product found in sampling can be found in Table 22-4.

The total annual production rate for this subcategory is unavailable at this time. Therefore, the total priority pollutant waste loads generated by this industry cannot be calculated and presented.

TABLE 22-1 - SUBCATEGORY PROFILE DATA SUMMARY

SUBCATEGORY	NICKEL SULFATE
Total subcategory capacity rate	
Total subcategory production rate	
Number of plants in this subcategory	12
308 Data on file for	6
With total capacity of	24,770 kkg/year
With total production of	17,670 kkg/year
Representing capacity	
Representing production	
Plant production range:	
Minimum	62 kkg/year
Maximum	8,250 kkg/year
Average production	2,100 kkg/year
Median production	1,600 kkg/year
Average capacity utilization	
Plant age range:	
Minimum	3
Maximum	48
Wastewater flow range:	
Minimum	< 1 cubic meters/day
Maximum	200 cubic meters/day
Volume per unit product:	
Minimum	< 1 cubic meters/kkg
Maximum	20 cubic meters/kkg

Sources of data are Stanford Research Institute, Directory of Chemical Producers, U.S.A., 1977, U.S. Department of Commerce, Current Industrial Reports, December 1977; Energy and Environmental Analysis, Inc.; Draft Report, "Preliminary Economic Assessment of Effluent Limitations in the Inorganic Chemical Industry."

TABLE 22-2 - EXISTING REGULATIONS - EFFLUENT LIMITATION GUIDELINES

SUBCATEGORY Nickel Sulfate

SUBPART AU (40CFR 415.470, 5/22/75)

		STANDARDS					
		BPCTCA		BATEA		NSPS	
Product Process	Parameters	Max.[1] kg/kkg (mg/l)	Avg.[2] k/kkg (mg/l)	Max. k/kkg (mg/l)	Avg. k/kkg (mg/l)	Max. k/kkg (mg/l)	Avg. k/kkg (mg/l)
Pure Raw Materials	Ni	No discharge of pwwp[3]		No discharge of pwwp		No discharge of pwwp	
	TSS	No discharge of pwwp		No discharge of pwwp		No discharge of pwwp	
Impure Raw Materials	Ni	0.006 (5.1)*	0.002 (1.7)				
	TSS	0.096 (82.1)	0.032 (27.4)				

[1] Max. = Maximum of any one day.

[2] Avg. = Average of daily values for thirty consecutive days shall not exceed.

[3] pwwp = Process wastewater pollutants.

* flow basis 170 l/kkg.

TABLE 22-3. SUMMARY OF RAW WASTE LOADINGS FOUND IN SCREENING AND VERIFICATION SAMPLING

SUBCATEGORY NICKEL SULFATE

Pollutant	Loadings						
	kg/day			kg/kkg			No. of Plants Averaged
	Minimum	Average	Maximum	Minimum	Average	Maximum	
Priority							
Cadmium, Cd	0.000014	0.0015	0.0045	0.000002	0.00017	0.0005	3
Chromium, Cr	0.00023	0.00091	0.0018	0.00001	0.00025	0.0005	2
Copper, Cu	0.0011	0.039	0.11	0.0001	0.01	0.03	3
Lead, Pb	0.000082	0.0014	0.0028	0.00002	0.0001	0.0003	3
Mercury, Hg		0.000027			0.00003		1
Nickel, Ni	0.27	10.8	31.5	0.035	1.20	3.45	3
Selenium, Se	0.00027	0.00059	0.00091	0.00003	0.000035	0.00004	2
Thallium, Tl		0.000032			0.000009		1
Conventional							
TSS	0.34	31.2	92.5	0.031		10.1	

TABLE 22-4. PRIORITY POLLUTANT RAW WASTE LOADS (in kg/kkg of Product)

SUBCATEGORY	NICKEL SULFATE		
POLLUTANT	PLANT		
	#369	#572	#120
Nickel, Ni	0.073	3.45	0.035
Copper, Cu	0.030	0.0001	0.0002
Chromium, Cr	0.0005		0.00001
Lead, Pb	0.00002	0.0003	0.00006
Zinc, Zn	0.00011	0.0012	0.00004
Mercury, Hg		0.0003	
Cadmium, Cd	0.000004	0.0005	0.000002
Selenium, Se		0.00003	0.00004
Thallium, Tl	0.000009		

22.1.2 Process Waste Sources and Waste Water Treatment Data

General Process Description

Raw materials and process - Two different raw materials are used to produce nickel sulfate. Pure nickel or nickel oxide powder is used or spent nickel catalysts, nickel plating solutions or residues. The general reaction is:

$$NiO + H_2SO_4 = NiSO_4 + H_2O \qquad (1)$$

The nickel sulfate produced when pure raw materials are used is filtered and sold or processed further using a crystallizer to produce a solid nickel sulfate product. This must be classified, dried, and screened before it is ready for sale.

The use of impure raw materials produces a nickel sulfate solution which must be treated in sequence with oxidizers, lime and sulfides to precipitate impurities which are then removed by filtration. The nickel sulfate solution can be sold or the product may be crystallized, classified, dried, and screened to produce solid nickel sulfate for sale.

Water Use and Waste Source Inventories

Water uses - Noncontact cooling water is used for nickel sulfate production in the reactor and in crystallizers. Water is used for direct process contact in the reactor. Small amounts of water are used for maintenance purposes, washdowns, cleanup, etc. Table 22-5 gives a summary of water usage.

Waste Sources

Noncontact cooling water is the main source of waste water, but it is not usually treated before discharge.

Direct process contact water constitutes the major portion of treated waste. The waste comes from the preliminary preparation of spent plating solutions used in the process. Plants which use impure nickel raw materials generate a filter backwash waste stream with high impurity levels. This stream must be sent through the treatment system.

Washdowns, spills, pump leaks, and maintenance uses account for the remaining wastes produced by nickel sulfate plants.

TABLE 22-5. WATER USAGE IN THE NICKEL SULFATE SUBCATEGORY

Plant	Non-contact cooling m^3/kkg	Direct Process contact m^3/kkg	Micellaneous (main, pump seals, etc...) m^3/kkg
#313 *	37.29	24.76	0.278
#069	1.67	0.0098	0.0196
#572 *	4.98	0.349	0.896
#369	0.417	0.783	0.094
#120 *	13.64	4.013	Nil
#603 *	2035	814	Nil

*Includes uses for other processes.

Control and Treatment Practices

Treatment practices at Plants #313, #069, #572, #369 and #120 all employ caustic precipitation of metal-bearing waste waters followed by filtration. The solid wastes are disposed of or used as landfill at Plant #120, while the liquid wastes are recycled to the process.

Plant #369 was visited in the screening phase of the program. Treatment at this plant consists of adjusting the pH to between 9 and 10 for the precipitation of metal hydroxides which are removed by settling prior to final discharge. Figure 22-1 shows the treatment system and sampling points. Table 22-6 gives flows and pollutant emissions for the streams sampled.

Plants #572 and #120 were visited and sampled during the verification phase of the program. At Plant #572, the wastes, washdowns, leaks, and air scrubber water are put through an equalization tank and then discharged to the municipal treatment system. In the equalization tank, alkaline wastes from another process are mixed in and the pH is raised to 10. Treatment of process wastes at Plant #120 consists of pH adjustment to precipitate nickel and other trace metals followed by sand filtration. The wastes are mixed with other plant wastes and discharged through a single outfall. Figures 22-2, 22-3, and 22-4 show the general flow sheets and waste streams sampled for #572 and #120 respectively. Table 22-6 shows the waste streams and loadings for both plants.

Evaluation of Production and Waste Flow Data

The flow for nickel sulfate wastes ranged from 0.417 m3/kkg to 0.722 m3/kkg. This gives an average of 0.570 m3/kkg of product. This data is based on the only two plants where the NiSO4 waste streams were separated from other wastes. All the plants visited produced solid wastes as sludges but no flow data was available.

Table 22-6 summarizes the waste flow data for all plants visited.

Process Modifications and Technology Transfer Options

Mechanical scrapers should be installed on filters at plants which use impure raw materials. This would eliminate the backwash and reduce the amount of waste water produced. Solids would need to be disposed. Installation of the scrapers would amount to a very small capital cost.

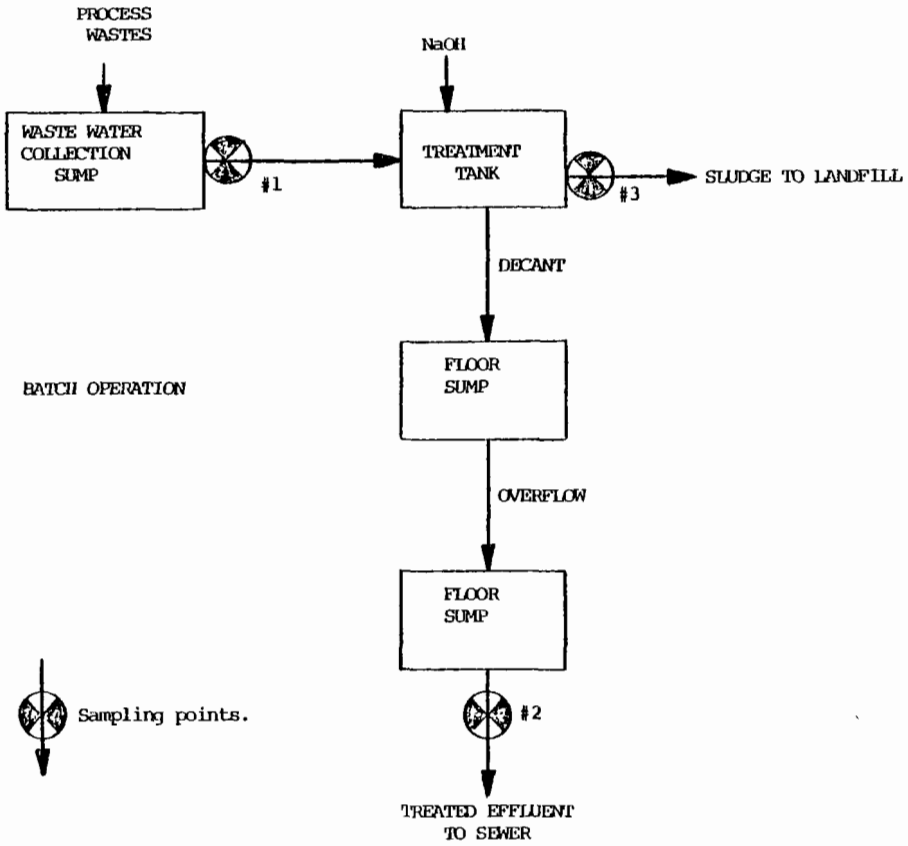

Figure 22-1. General waste water treatment process flow diagram showing the sampling points. (Nickel Sulfate Manufacture)

TABLE 22-6. FLOW AND POLLUTANT CONCENTRATION DATA OF THE SAMPLED WASTE STREAMS FOR PLANTS PRODUCING NICKEL SULFATE

Stream	Flow m^3/kkg	TSS kg/kkg	Ni kg/kkg	Cu kg/kkg	Pb kg/kkg
		Plant #369			
Untreated waste	0.417		0.073	0.031	0.0005
Treated waste	0.417		0.00058	0.0075	0.0002
		Plant #572			
Scrubber waste	3.15	10.15	3.45	0.00013	0.0003
		Plant #120			
$NiSO_4$ waste	0.722	0.031	0.0355	0.00015	0.00004
All Nickel wastes	7.54	0.521	0.094	-	-
Treated effluent	7.54	0.032	0.0015	0.0002	-

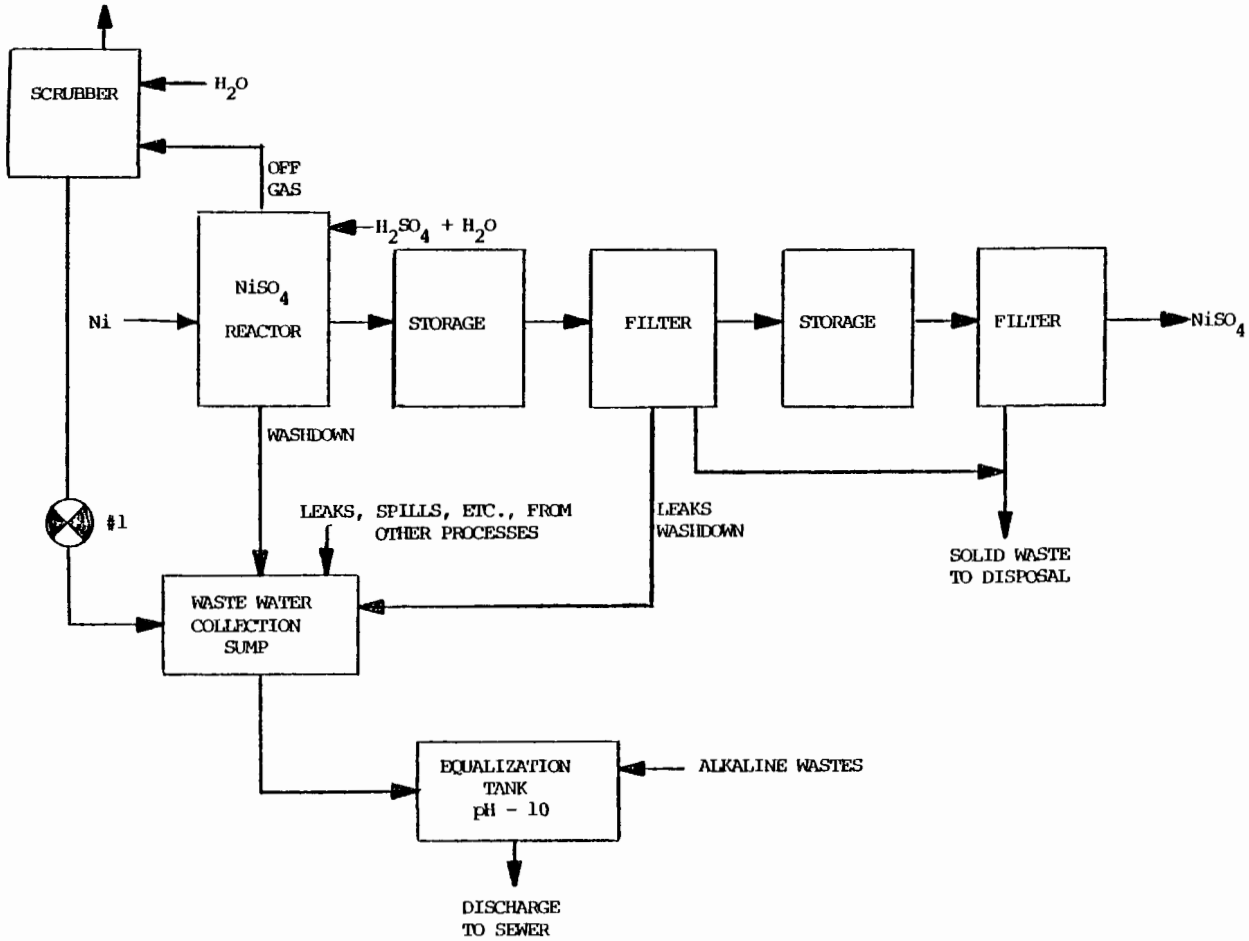

Figure 22-2. General process flow diagram at Plant #572 showing the sampling points. Nickel Sulfate Manufacture

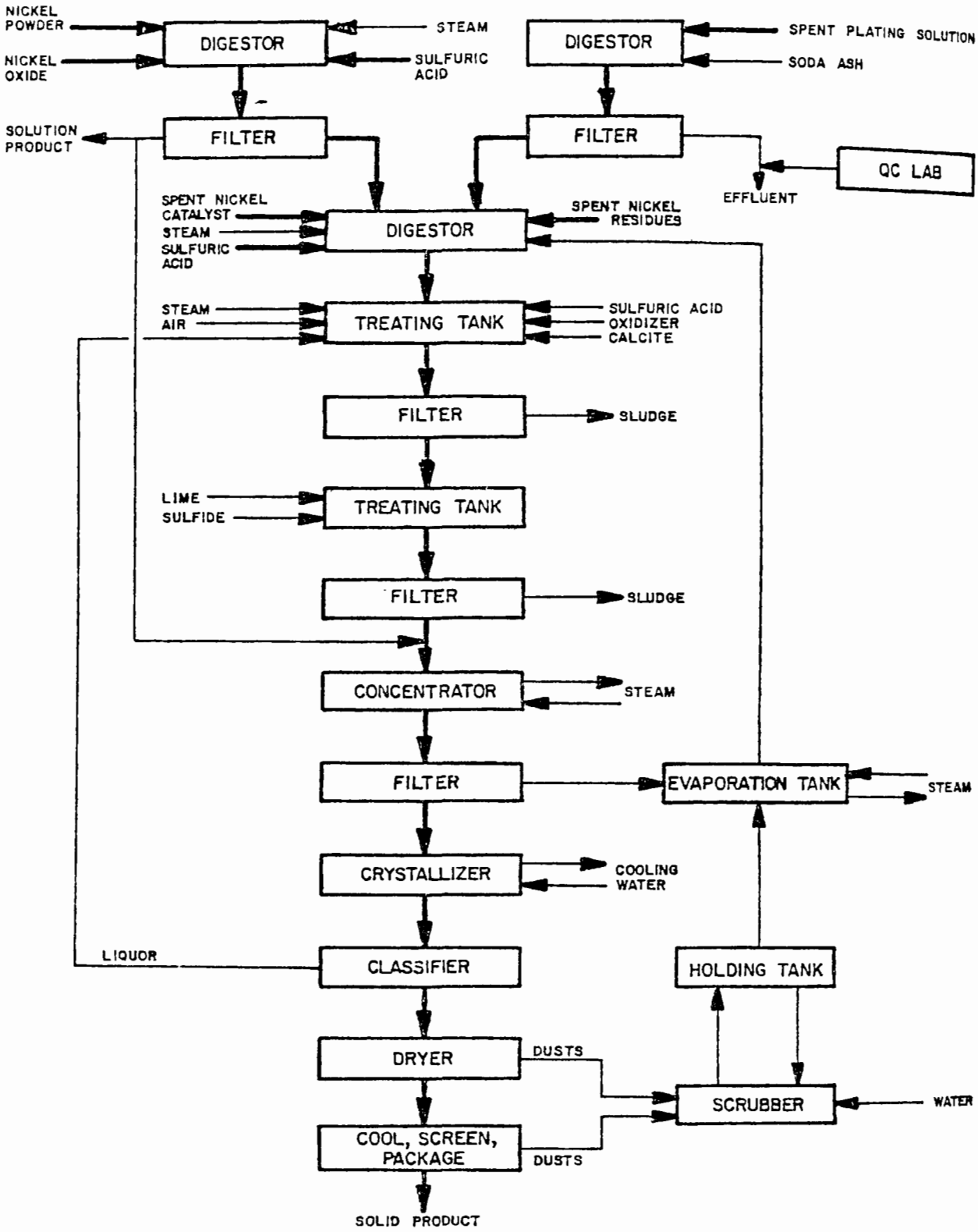

Figure 22-3. General process flow diagram of Plant #120.
Nickel Sulfate Manufacture

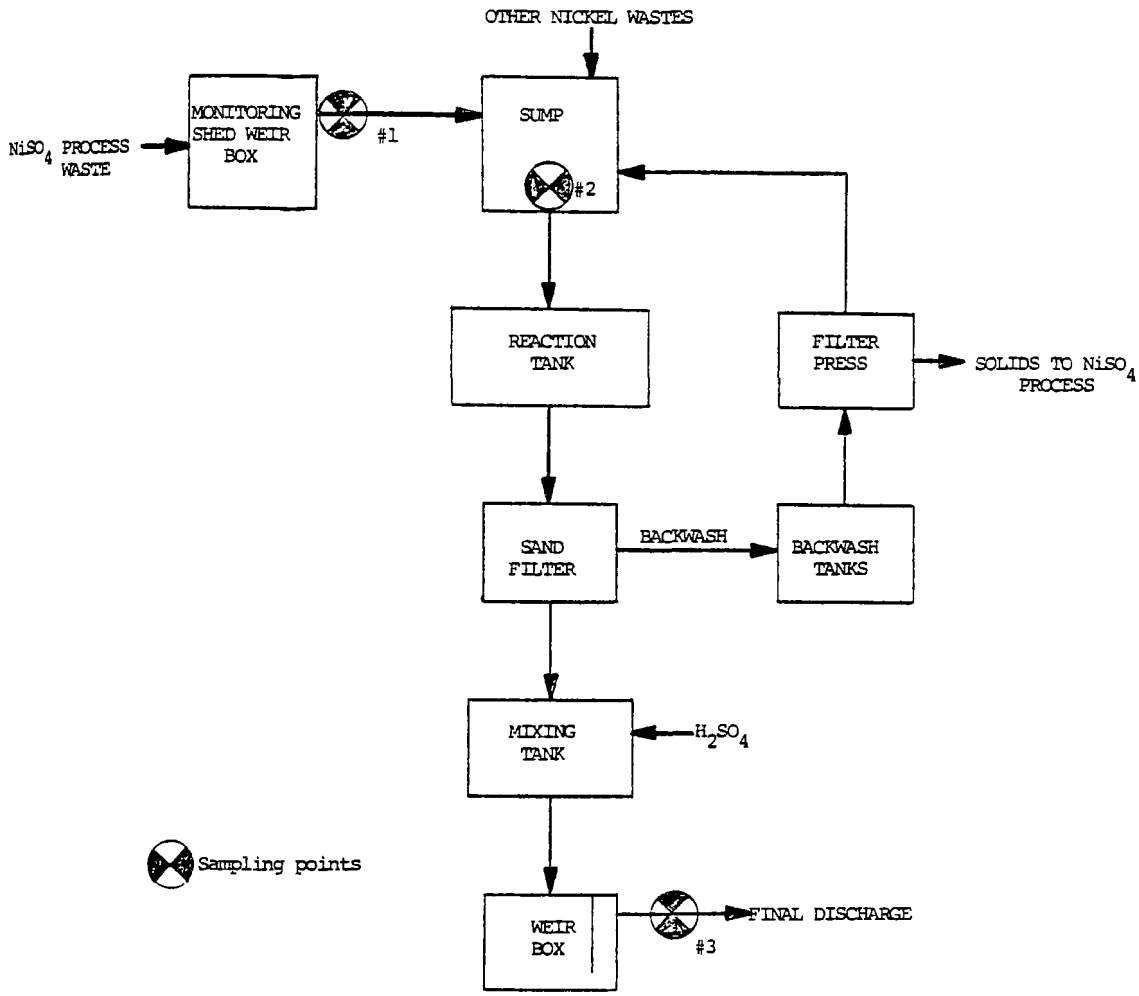

Figure 22-4. General waste water treatment process flow diagram at Plant #120 showing the sampling points. (Nickel Sulfate Manufacture)

Best Management Practices

The best technology for the treatment of wastes when starting with pure raw materials is to recycle all process waters. To implement this treatment proper recycle piping and pumping would be needed.

The best technology available where nickel sulfate is manufactured from impure plating solution is caustic addition to precipitate nickel followed by sand filtration to remove suspended solids. This would require installing caustic treatment tanks, filters, pH control equipment, and the necessary piping and pumping.

Model Plant and BPT Treatment System Specifications

Best Practical Technology for plants using pure nickel as a raw material is total recycle of all process water. A plant using impure raw materials requires caustic neutralization of the waste followed by sand filtration.

Waste system water flow - The flow used for the model plant is 0.64 m3/kkg of nickel sulfate. This is based on the largest producer in the industry. Plant #369 showed a waste flow of 0.416 m3/kkg and #120 showed 0.722 m3/kkg. Other plants have combined waste waters and their flows are not known with accuracy.

Production - Nickel sulfate production ranges from 96 kkg/yr to 5,910 kkg/yr in the plants for which 308 Questionnaires were available. The average production for these six plants was 2,120 kkg/yr. The production levels selected for the model plant ranged from 900 kkg/yr to 7,000 kkg/yr. The mode of operation at all nickel sulfate plants is the batch process and, for the model plant, is assumed to operate for 250 days/year.

Solid waste generation - Solid wastes are generated from the filtration and settling of metals from the nickel sulfate solution. The solids can be recycled to the process for reuse when pure raw material is used. If the solids cannot be recycled they must be disposed of in a chemical landfill because the solids may contain contaminants that can pollute the soil or ground water. The quantity generated is assumed to be 0.39 kg/kkg of nickel sulfate.

Treatment chemicals - Caustic is required for neutralization to precipitate the metals as their hydroxides. Acid is needed for pH adjustment before final discharge. For the model plant, these practices were assumed to use 0.0016 kg/kkg and 0.0001 kg/kkg

respectively.

22.2 TECHNOLOGY BASED POLLUTION ABATEMENT

22.2.1 Advanced Treatment Applications

Priority Pollutants to be Controlled

The priority pollutants present in a specific process operation depends upon the sources and nature of the raw materials being used, which presumably could vary from time to time. If impure raw materials include spent plating solutions, most of the heavy metals (except nickel) will be rejected from the process as sludges from the purification of the plating solutions prior to nickel sulfate production. If these sludges are handled as solids, they can be segregated for further reclamation or for safe disposal at a chemical landfill. If sludges from the process are discharged as slurries to the waste treatment facilities they will be settled or filtered during the treatment proposed for the model systems. The only significant priority pollutant found in the sampling program was nickel.

Removal Technologies Available

Alkaline precipitation will remove nickel and most other heavy metals from solution, allowing them to be settled and filtered in successive steps. Nickel and the common heavy metals, except chromium can also be precipitated as metallic sulfides, for later separation by settling and filtration.

Technology to be Used at Each Level

BPT - Because it is widely used in the industry, alkaline precipitation with caustic soda is chosen as the BPT (Level 1) model. With dual media filtration it is operated as a batch process to suit the production schedule.

Level 2 - Alkaline precipitation is supplemented by the addition of ferrous sulfide, to precipitate dissolved nickel more effectively before the filtration step shown in Level 1.

Flow Diagrams

Level 1	Figure 22-5
Level 2	Figure 22-6

Equipment Functions - Wastes are received in a one-day holding tank or waste water collection sump which is drained each day to a reaction vessel. At the end of a normal work week, the contents of the reaction vessel are raised to about pH 10 with caustic soda, thoroughly mixed, and allowed to settle. The separated liquids and semi-solids are then filtered and the final effluent is adjusted to a pH from 6 to 9 before discharge. In the small and medium models it is assumed that both the liquid and the semi-solids in the reaction tank are filtered through a high-pressure filter press, and discharged after pH adjustment. In the highest production model, which produces 18 m3 per day of wastes, semi-solids are filtered through a filter press and a separate dual media filter is provided for filtering the decanted liquid. In Level 2 the metallic hydroxide sludge is drawn off to a sludge holding tank and the clarified supernatant in the reaction tank is treated with ferrous sulfide, precipitating metallic sulfides. The batch is then filtered through a filter press (for small or medium plants) or through a filter press (for semi-solids) and a dual- media filter (for supernatant) in the larger operations.

Chemicals and Handling - Caustic soda in solution form is used for alkaline precipitation at both levels to form insoluble metallic hydroxides without precipitating calcium sulfate, as would occur with lime application. Caustic soda solution is handled in conventional equipment, or is drawn in batches from shipping containers when small volumes are needed. In Level 2, ferrous sulfide is prepared from ferrous sulfate and sodium bisulfide. When these materials are mixed in a well ventilated space and applied to the alkaline supernatant in the reaction tank there are no special problems.

Separation and Removal of Solids - In the small and medium production models, at both levels, essentially all solids are collected in a filter press, which is periodically cleaned. The dewatered sludge is hauled to a chemical landfill. In the larger model plant, backwash from cleaning the dual medium filter returns to the influent holding tank, from which the suspended solids pass via the reaction tank and from there to the sludge filter press.

Monitoring Requirements - Satisfactory separation of heavy metals can be assured by maintaining the proper reaction pH, which can be determined manually on each batch, using simple

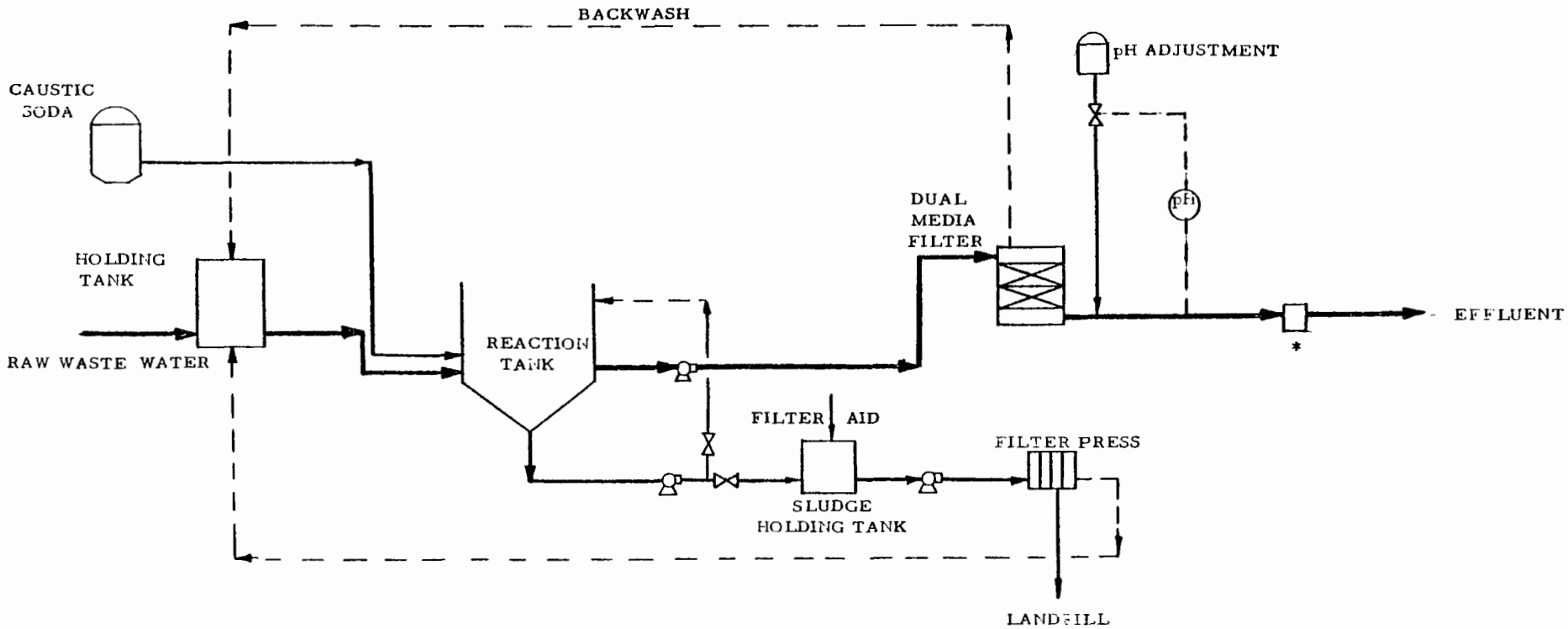

*Includes flow monitoring, pH monitoring and sampler

Figure 22-5. Waste water treatment Level 1 for nickel sulfate subcategory - batch process.

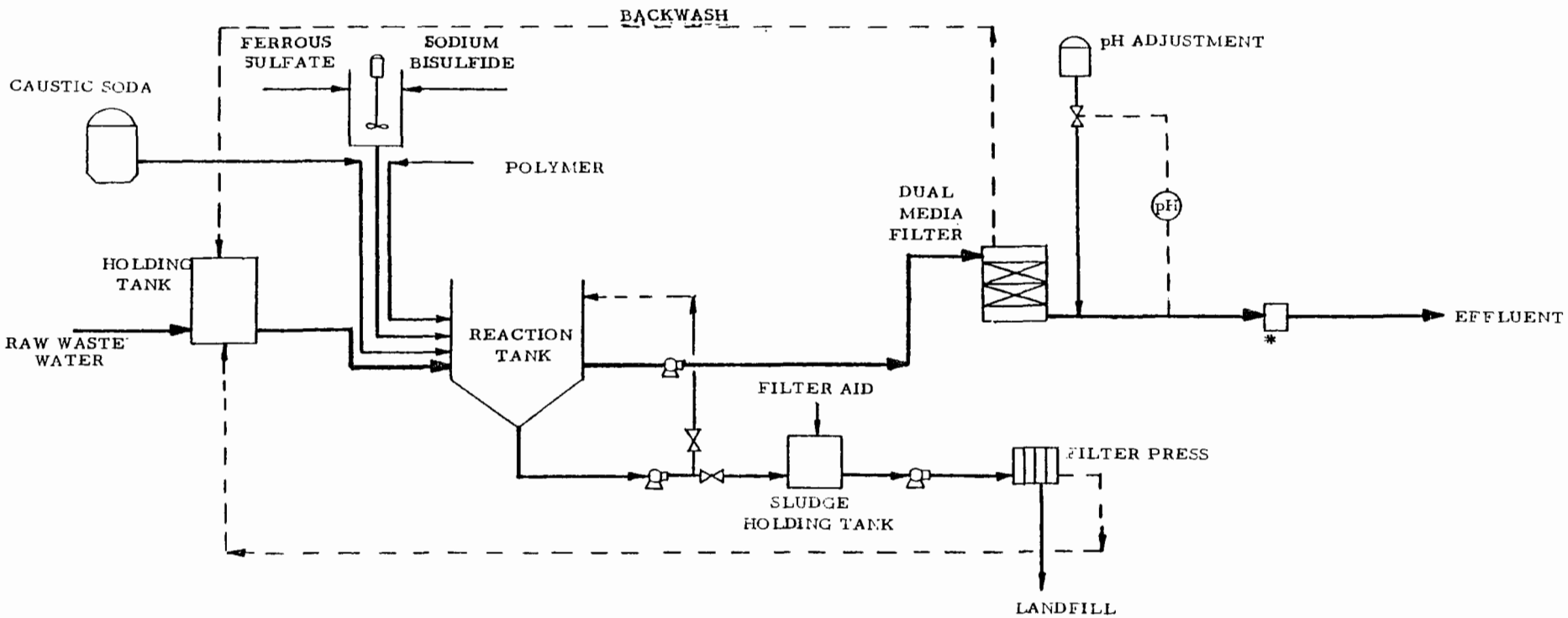

*Includes flow monitoring, pH monitoring and sampler

Figure 22-6. Waste water treatment Level 2 for nickel sulfate subcategory - batch process.

field equipment. Occasional monitoring of nickel in the effluent for reporting purposes should be done by atomic absorption methods on a sample of the liquid discharge. Monitoring for dissolved sulfide should not be necessary, because unreacted ferrous sulfide will oxidize to ferric sulfide and settle with the other metallic sulfides.

22.2.2 Estimated Performance of BPT Systems

BPT technology has been specified as hydroxide precipitation of metals, followed by filtration to remove suspended solids. Plant #120 is currently practicing this technology. Table 22-7 presents effluent quality achieved at this facility as well as results from the verification sampling program.

Base Level Performance Characteristics for BPT Pollutant Removal

Effluent quality achievable through implementation of BPT technology is presented in Table 22-8 and is based on quality achieved at Plant #120.

Base Level Performance Characteristics for Priority Pollutant Removal

None of the additional priority pollutants identified were found at levels that would require treatment.

Pretreatment Applications

Two nickel sulfate plants are known to presently discharge to POTWs. Pretreatment at one plant is simple settling while at the other, it is hydroxide precipitation followed by settling.

Considering the small waste water flows generated in the manufacture of nickel sulfate, the application of BPT technology is appropriate for pretreatment.

22.2.3 Estimated Performance of Advanced Level Systems

Advanced Level Performance Estimates for BPT and Priority Pollutant Removal

Only one advanced treatment alternative has been developed for the nickel sulfate subcategory. Addition of sulfide before filtration for further removal of nickel is proposed.

TABLE 22-7. WASTE CHARACTERISTICS OF NICKEL SULFATE PLANT #120

Verification Sampling: Flow = 0.72 m^3/kkg

Pollutant	Raw Waste mg/l Avg.	Raw Waste mg/l Max.	Raw Waste kg/kkg Avg.	Raw Waste kg/kkg Max.	Treated Effluent Quality* mg/l Avg.	Treated Effluent Quality* mg/l Max.
Total Suspended Solids	43	64	0.842	1.25	4.33	8
Nickel, Ni	49.15	75.80	0.962	1.48	0.2	0.34

Effluent Monitoring: Daily Data

Pollutant	Concentration (mg/l) Min	Avg.	Max	St.Dev.	Waste Load (kg/kkg Min	Avg	Ma
Nickel, Ni	0.08	1.83	8.33	2.22	0.043	0.35	1.8

TABLE 22-8 CONTROL PARAMETER LIMITATIONS
SUBCATEGORY: Nickel Sulfate
Level of Treatment: 1
Waste Water Flow: 0.64 m3/kkg

Pollutant	Subcategory Performance (mg/l)	(1) VFR	Quality Limit (mg/l)		Emission Limit (kg/kkg)	
			30 day Aver	24 hr Max	30 day Aver	24 hr Max
BPT Pollutants:						
Total Suspended Solids, TSS	4.0(2)	2.0	15	30	0.0096	0.019
Nickel, Ni	2.7	3.0	2.0	6.0	0.0013	0.0038

(1) - VFR: ratio of the 24 hour variability factor to the 30 day variability factor.

(2) - Verification sampling

e 22-9 presents estimated achievable effluent quality thmplementation of this advanced technology.

Nee Applications

r examination of the effectiveness of the two treatment teies applicable to nickel sulfate wastes, it has been ded that BPT technology in conjunction with careful waste waume control in the design and operation of a new nickel sıfacility should achieve effluent quality equivalent to thity estimated for the advanced technology.

2?st Estimates

Din

cost estimates for three models having different pın levels are presented in Tables 22-10, 22-11 and 22-12. Arst as a function of production is shown graphically in F:-7. Treatment cost per metric ton of product is shown ir 22-8.

e 22-13 gives a summary of the unit cost distribution bı amortization and operation and maintenance cost cıs at various production and levels of treatment.

S

: estimates developed for the first level of treatment i that at a low production level labor cost has a sınt impact on the total annual costs. At medium pın level, amortization, operation and maintenance costs a important factors in the annual costs. At a high pın level, amortization cost is a significant factor in tıl costs. At the second level of treatment, there is no sınt change in the annual cost, with production.

TABLE 22-9 CONTROL PARAMETER LIMITATIONS
SUBCATEGORY: Nickel Sulfate
Level of Treatment: 2
Waste Water Flow: 0.64 m3/kkg

Pollutant	Treatability (mg/l)	(1) VFR	Quality Limit (mg/l)		Emission Limit (kg/kkg)	
			30 day Aver	24 hr Max	30 day Aver	24 hr Max
BPT Pollutants:						
Total Suspended Solids, TSS	15	2.0	15	30	0.0096	0.019
Nickel, Ni	0.5	3.0	0.5	1.5	0.00032	0.00096

(1) - VFR: ratio of the 24 hour variability factor to the 30 day variability factor.

TABLE 22-10. MODEL PLANT TREATMENT COSTS

Subcategory NICKEL SULFATE		Type of Regulation BAT
Production	900 metric tons per year (	992 tons per year)
	2 metric tons per day (	2 tons per day)
Waste water flow	3 cubic meters per day.	

	LEVEL OF TREATMENT*	
	FIRST	SECOND
A. INVESTMENT COST		
Construction	$6,000	$100
Equipment in place, including piping, fittings, electrical work and controls.....	29,500	900
Monitoring equipment in place.....	9,000	
Engineering design and inspection.....	8,900	200
Incidentals, overhead, fees, contingencies...	8,900	200
Land.....	1,800	
TOTAL INVESTMENT COST	$64,100	$1,400
B. OPERATION AND MAINTENANCE COST		
Labor and supervision.	$8,000	
Energy.....	30	
Chemicals.....	200	30
Maintenance.....	6,230	140
Taxes and insurance...	1,923	42
Residual waste disposal.....	100	
Monitoring, analysis and reporting.....	2,500	1,250
TOTAL OPERATION AND MAINTENANCE COST	$18,983	$1,462
C. AMORTIZATION OF INVESTMENT COST	$10,136	$227
TOTAL ANNUAL COST	$29,119	$1,689

*First level represents the base cost of treatment system. Other levels represent the incremental cost above base cost.

TABLE 22-11.MODEL PLANT TREATMENT COSTS

Subcategory NICKEL SULFATE		Type of Regulation BAT
Production	4,000 metric tons per year (11 metric tons per day (	4,410 tons per year) 12 tons per day)
Waste water flow	11 cubic meters per day.	

	LEVEL OF TREATMENT*	
	FIRST	SECOND
A. INVESTMENT COST		
Construction	$8,350	$100
Equipment in place, including piping, fittings, electrical work and controls.....	51,000	900
Monitoring equipment in place.....	9,000	
Engineering design and inspection.....	13,670	200
Incidentals, overhead, fees, contingencies...	13,670	200
Land.....	1,800	
TOTAL INVESTMENT COST	$97,490	$1,400
B. OPERATION AND MAINTENANCE COST		
Labor and supervision.	$8,000	
Energy.....	40	
Chemicals.....	900	75
Maintenance.....	9,569	140
Taxes and insurance...	2,924	42
Residual waste disposal.....	100	
Monitoring, analysis and reporting.....	2,500	1,250
TOTAL OPERATION AND MAINTENANCE COST	$24,033	$1,507
C. AMORTIZATION OF INVESTMENT COST	$15,568	$227
TOTAL ANNUAL COST	$39,601	$1,734

*First level represents the base cost of treatment system. Other levels represent the incremental cost above base cost.

TABLE 22-12. MODEL PLANT TREATMENT COSTS

Subcategory NICKEL SULFATE		Type of Regulation BAT
Production	7,000 metric tons per year (7,717 tons per year) 20 metric tons per day (22 tons per day)	
Waste water flow	18 cubic meters per day.	

	LEVEL OF TREATMENT*	
	FIRST	SECOND
A. INVESTMENT COST		
Construction	$12,000	$200
Equipment in place, including piping, fittings, electrical work and controls.....	94,500	1,000
Monitoring equipment in place.....	9,000	
Engineering design and inspection.....	23,100	240
Incidentals, overhead, fees, contingencies...	23,100	240
Land.....	3,000	
TOTAL INVESTMENT COST	$164,700	$1,680
B. OPERATION AND MAINTENANCE COST		
Labor and supervision.	$8,000	
Energy.....	50	
Chemicals.....	1,600	135
Maintenance.....	16,170	168
Taxes and insurance...	4,941	50
Residual waste disposal.....	200	
Monitoring, analysis and reporting.....	2,500	1,250
TOTAL OPERATION AND MAINTENANCE COST	$33,461	$1,603
C. AMORTIZATION OF INVESTMENT COST	$26,308	$273
TOTAL ANNUAL COST	$59,769	$1,876

*First level represents the base cost of treatment system. Other levels represent the incremental cost above base cost.

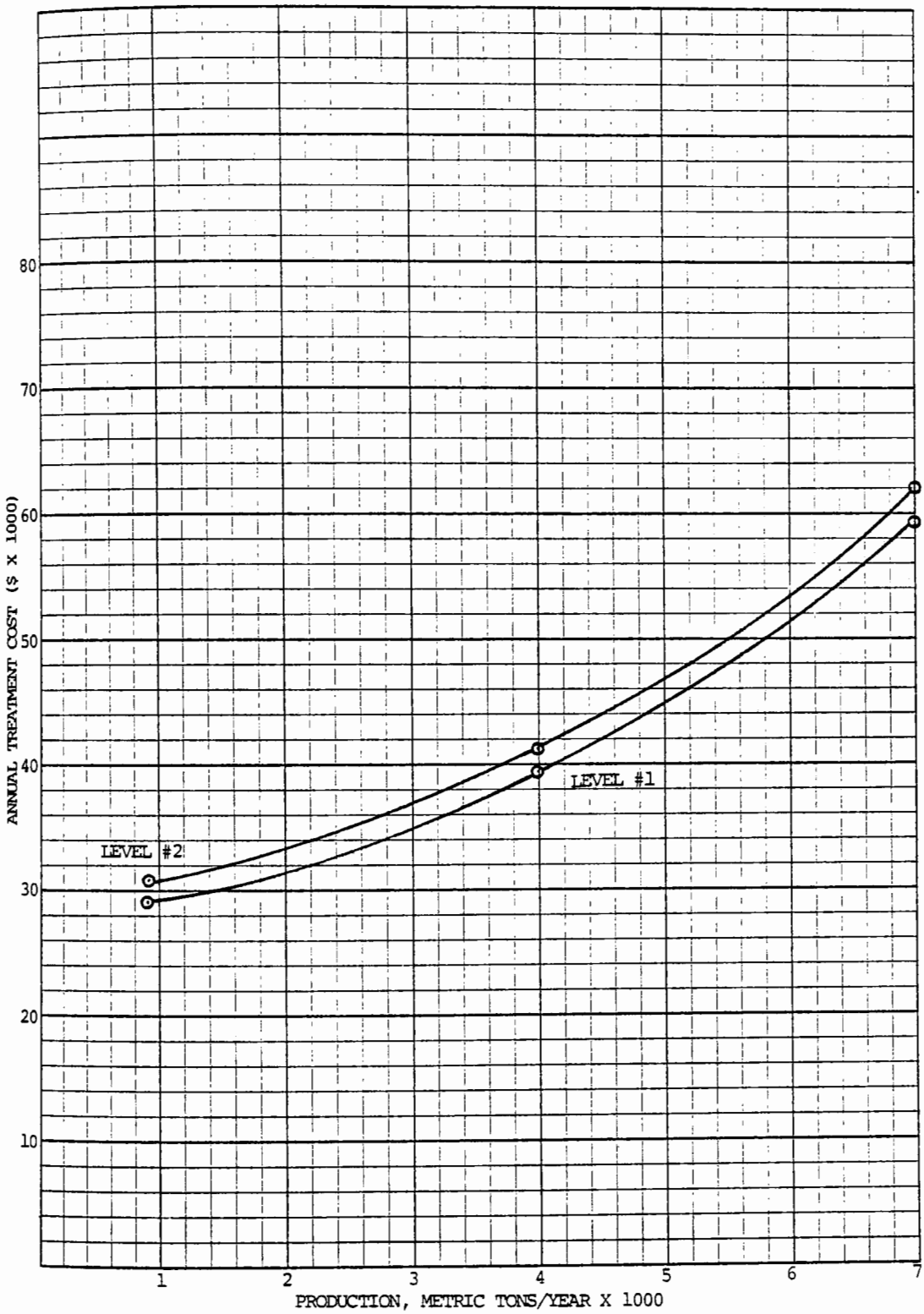

Figure 22-7. Relationship of annual treatment cost to production for the Nickel Sulfate Subcategory

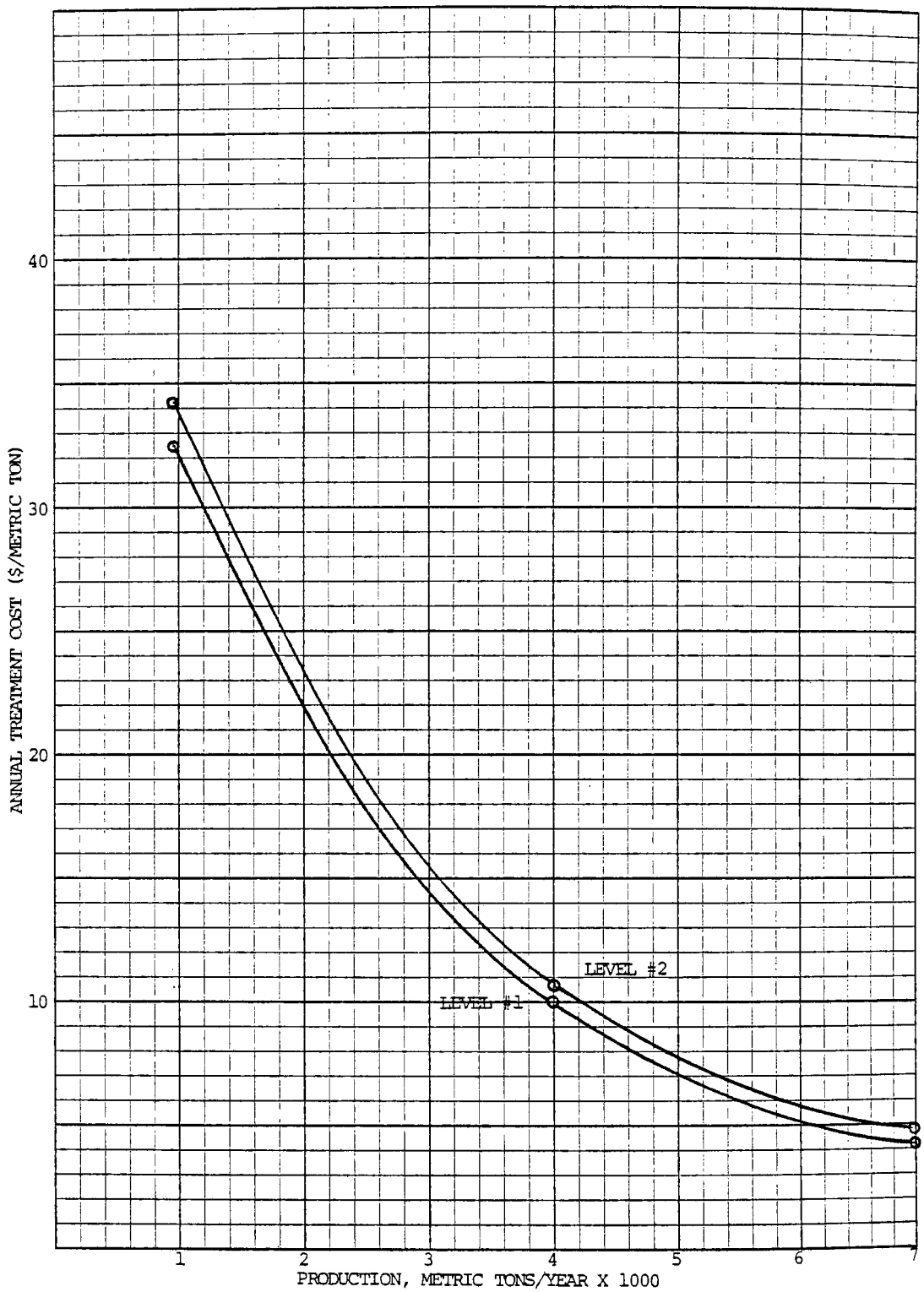

Figure 22-8. Relationship of annual unit treatment cost to production for the Nickel Sulfate Subcategory

TABLE 22-13 MODEL PLANT TREATMENT COSTS

Subcategory NICKEL SULFATE Type of Regulation BAT

	PRODUCTION (kkg/yr)	FLOW (m3/day)	Annual Treatment Costs ($/kkg) LEVEL OF TREATMENT FIRST $	SECOND $	THIRD $	FOURTH $
Annual Operation and Maintenance	900	3	21.09	1.62	Not Applicable	
	4,000	11	6.01	0.38		
	7,000	18	4.78	0.23		
Annual Amortization	900	3	11.26	0.25		
	4,000	11	3.89	0.06		
	7,000	18	3.76	0.04		
Total Cost	900	3	32.35	1.88		
	4,000	11	9.90	0.43		
	7,000	18	8.54	0.27		

SECTION 23

SILVER NITRATE INDUSTRY

23.1 ASSESSMENT OF THE WATER POLLUTION POTENTIAL

23.1.1 Industry Profile and Analytical Results

Most of the silver nitrate produced is for captive use in the photographic industry. It is also used in the manufacture of silver salts, mirrors, for silver plating, coloring porcelain and as a chemical reagent.

The industry profile data is given in Table 23-1, while existing regulations are summarized in Table 23-2.

Priority pollutants found at significant levels during sampling at Plant #609 were:

Pollutant	Concentration (ug/l) Screening	Verification
Silver	164	65
Cyanide	580	470

Silver was not found at a significant concentration during verification sampling of the same plant. However, a significant level of cyanide was found again. The source of cyanide was found to be from a soaking solution which is used to remove silver nitrate stains from workers' clothes. This solution is sent to the silver recovery treatment system. When plant personnel discontinued this practice cyanides disappeared from the effluent.

Action on this subcategory has been deferred in accordance with Paragraph 8 of the Settlement Agreement. A new subcategory including all silver compounds willbe reviewed under Phase II BAT review.

TABLE 23-1 - SUBCATEGORY PROFILE DATA SUMMARY

SUBCATEGORY	SILVER NITRATE
Total subcategory capacity rate	
Total subcategory production rate	35,000 kkg/year
Number of plants in this subcategory	7
308 Data on file for	2
With total capacity of	6,507 kkg/year
With total production of	3,256 kkg/year
Representing capacity	
Representing production	9 percent
Plant production range:	
Minimum	50 kkg/year
Maximum	3,206 kkg/year
Average production	
Median production	
Average capacity utilization	
Plant age range:	
Minimum	20 years
Maximum	64 years
Wastewater flow range:	
Minimum	<1 cubic meters/day
Maximum	38 cubic meters/day
Volume per unit product:	
Minimum	1 cubic meter/kkg
Maximum	4 cubic meters/kkg

Sources of data are Stanford Research Institute, Directory of Chemical Producers, U.S.A., 1977, U.S. Department of Commerce, Current Industrial Reports, December 1977; Energy and Environmental Analysis, Inc.; Draft Report, "Preliminary Economic Assessment of Effluent Limitations in the Inorganic Chemical Industry."

TABLE 23-2 - EXISTING REGULATIONS - EFFLUENT LIMITATION GUIDELINES

SUBCATEGORY Silver Nitrate

SUBPART BA (40CFR 415.530, 5/22/75)

		STANDARDS					
		BPCTCA		BATEA		NSPS	
Product Process	Parameters	Max.[1] kg/kkg (mg/l)	Avg.[2] k/kkg (mg/l)	Max. k/kkg (mg/l)	Avg. k/kkg (mg/l)	Max. k/kkg (mg/l)	Avg. k/kkg (mg/l)
$AgNO_3$	Ag	0.009 (6.0)*	0.003 (2.0)				
	TSS	0.069 (46.0)	0.023 (15.3)				

[1]Max. = Maximum of any one day.

[2]Avg. = Average of daily values for thirty consecutive days shall not exceed.

*flow basis 1500 l/kkg.

SECTION 24

SODIUM BISULFITE INDUSTRY

24.1 ASSESSMENT OF THE WATER POLLUTION POTENTIAL

24.1.1 Industry Profile and Analytical Results

Sodium Bisulfite is manufactured both in liquid and powdered form. Captive use is very small. Sodium bisulfite is used in the manufacture of photographic chemicals, organic chemicals, textile and in food processing. It is also used in the tanning industry and in the sulfite process for the manufacture of paper products..

The industry profile data are given in Table 24-1, while existing regulations are summarized in Table 24-2.

Priority pollutants found at significant levels in the raw waste during sampling at Sodium Bisulfite Plants were as follows:

Pollutant	Maximum Concentration Observed (ug/l) Screening	Verification (2 Plants)
Copper	375	926
Zinc	2,480	3,600
Cadmium	6	41
Chromium	17	3,360
Antimony	30	650
Lead	8	1,050
Mercury	3	16.7
Nickel	250	455
Silver	2	<30

A summary of daily and unit product raw waste loads for all plants sampled can be found in Table 24-3. Individual plant raw waste loads per unit product found in sampling can be found in Table 24-4.

The total annual production rate for this subcategory is

TABLE 24-1 - SUBCATEGORY PROFILE DATA SUMMARY

SUBCATEGORY	SODIUM BISULFITE
Total subcategory capacity rate	
Total subcategory production rate	
Number of plants in this subcategory	9
308 Data on file for	2
With total capacity of	46,000 kkg/year
With total production of	28,300 kkg/year
Representing capacity	
Representing production	
Plant production range:	
Minimum	4,700 kkg/year
Maximum	23,600 kkg/year
Average production	17,800 kkg/year
Median production	16,900 kkg/year
Average capacity utilization	62 percent
Plant age range:	
Minimum	4 years
Maximum	19 years
Wastewater flow range:	
Minimum	3 cubic meters/day
Maximum	100 cubic meters/day
Volume per unit product:	
Minimum	<< 1 cubic meter/kkg
Maximum	< 1 cubic meter/kkg

Sources of data are Stanford Research Institute, Directory of Chemical Producers, U.S.A., 1977, U.S. Department of Commerce, Current Industrial Reports, December 1977; Energy and Environmental Analysis, Inc.; Draft Report, "Preliminary Economic Assessment of Effluent Limitations in the Inorganic Chemical Industry."

TABLE 24-2 - EXISTING REGULATIONS - EFFLUENT LIMITATION GUIDELINES

SUBCATEGORY Sodium Bisulfite

SUBPART BB (40CFR 415.540, 5/22/75)

		STANDARDS					
		BPCTCA		BATEA		NSPS	
Product Process	Para-meters	Max.[1] kg/kkg (mg/l)	Avg.[2] k/kkg (mg/l)	Max. k/kkg (mg/l)	Avg. k/kkg (mg/l)	Max. k/kkg (mg/l)	Avg. k/kkg (mg/l)
Sodium Bisulfite	Reserved	Reserved		Reserved		Reserved	

[1]Max. = Maximum of any one day.

[2]Avg. = Average of daily values for thirty consecutive days shall not exceed.

TABLE 24-3. SUMMARY OF RAW WASTE LOADINGS FOUND IN SCREENING AND VERIFICATION SAMPLING

SUBCATEGORY SODIUM BISULFITE

Pollutant	Loadings						
	kg/day			kg/kkg			No. of Plants Averaged
	Minimum	Average	Maximum	Minimum	Average	Maximum	
Priority							
Antimony, Sb	0.00045	0.0018	0.0041	0.000007	0.000052	0.00008	2
Cadmium, Cd	0.00023	0.0003	0.00041	0.000004	0.00001	0.000017	3
Chromium, Cr	0.018	0.54	1.05	0.0003	0.011	0.022	2
Copper, Cu	0.005	0.011	0.015	0.00007	0.00046	0.001	2
Lead, Pb	0.000091	0.0045	0.0095	0.000007	0.000092	0.0002	3
Mercury, Hg	0.000091	0.00021	0.00045	0.000001	0.000006	0.00001	2
Nickel, Ni	0.0032	0.0068	0.0091	0.00005	0.00031	0.0007	3
Zinc, Zn	0.016	0.18	0.42	0.0002	0.0053	0.0088	3
Conventional							
TSS	3.20	12.9	25.4	0.21	0.27	0.38	
COD	54.4	117	234	1.33	2.94	4.04	

TABLE 24-4. PRIORITY POLLUTANT RAW WASTE LOADS (in kg/kkg of Product)

SUBCATEGORY	SODIUM BISULFITE		
POLLUTANT	PLANT		
	#282	# 987	#586
Copper, Cu	0.001	0.00007	0.0002
Zinc, Zn	0.007	0.0002	0.0088
Cadmium, Cd	0.000017	0.000004	0.00001
Chromium, Cr		0.0003	0.022
Lead, Pb	0.000007	0.00007	0.0002
Mercury, Hg	0.000007	0.000001	0.00001
Nickel, Ni	0.0007	0.00005	0.00017
Antimony, Sb	0.00007	0.000007	0100008

unavailable at this time. Therefore, the total priority pollutant waste loads generated by this industry cannot be calculated and presented.

24.1.2 Process Waste Sources and Waste Water Treatment Data

General Process Description

Raw material and process - Sodium bisulfite is produced by reacting sodium carbonate (soda ash) with sulfur dioxide and water. The reaction is:

$$Na_2CO_3 + 2SO_2 + H_2O = 2NaHSO_3 + CO_2 \quad (1)$$

This reaction produces a slurry of sodium bisulfite crystals which can be sold, but which is usually processed to form anhydrous sodium metabisulfite. This requires thickening, centrifuging, drying, and packaging operations.

Water Use and Waste Source Inventories

Water uses - Direct process contact water is used to slurry the sodium carbonate for the reaction. Noncontact cooling water is another water use at one plant. Water is also used for pump seals, maintenance and washdowns. Table 24-5 gives a summary of water usage at the plants for which 308 Questionnaires were available.

Waste Sources - Noncontact cooling water from the centrifuge is a source of waste at one plant. However, direct process contact water is the main source of waste water which must be treated, together with miscellaneous wastes such as water used for maintenance purposes, washdowns, and spill cleanup.

Control and Treatment Practices

The Best Practicable Control Technology has been identified as neutralization with caustic soda followed by aeration and filtration. Aeration removes the reduced sulfur compounds which contribute to a high COD in the raw waste.

Plant #987 adds 50 percent caustic to the oxidation tank and blows air through while mechanically agitating. The waste is discharged to a river following the 17-hour retention period.

Plant #282 uses caustic soda or sodium carbonate for pH control followed by sodium hypochlorite addition to oxidize

TAB5. WATER USAGE IN THE SODIUM BISULFITE SUBCATEGORY

Pla	Direct Contact Process m^3/kkg	Noncontact Cooling m^3/kkg	Maintenance Washdowns, etc. m^3/kkg
# 2	0.872	3.85	0.843
# 5	NA	NA	NA
# 9	1.15	0	0.397

NA =ailable

sulfite and other reduced sulfur species. The waste is then neutralized and discharged to a County sewer.

Plant #586 mixes the bisulfite waste with waste from an amine plant, and $ZnSO_4$ production wastes, and truck wash waste. Lime is added to the wastes which are then passed through an aeration tank with eight-hour's retention time. The treated waste goes through primary and secondary settling before final discharge.

Plant #282 was visited in the screening phase of the program. The bisulfite waste is treated on a batch basis every two or three days. Sodium hypochlorite is added to the waste to oxidize the sulfite. The oxidized sulfite waste is mixed with wastes from an organic chemical plant and neutralized. The combined wastes are then discharged to a sewer. Table 24-6 shows the flow data and pollutant emissions, while Figure 24-1 gives the process flow diagram and shows the sampling points used in screening.

In verification, two plants were visited, namely #586 and #987. At Plant #586 the sodium bisulfite wastes are combined with many other process wastes and they are treated together. Figure 24-2 shows the flowsheet and the points sampled. Table 24-7 gives the pollutant emissions and flow data for the waste streams. The filter wash is the main process waste at Plant #987. This waste is neutralized with caustic soda to pH 9 - 10 to convert the bisulfite waste to sulfite. The sulfite is then oxidized with air to sulfate. The treated waste, including solids, is discharged to a river. Table 24-8 shows the pollutant emissions and flow data for the waste streams sampled. Figure 24-3 shows the process flow diagram and sampling points at Plant #987.

Evaluation of Production and Waste Flow Data

Screening and verification sampling showed significant levels of zinc in the waste streams. Plants #987 and #586 effectively treated the wastes to remove the zinc. Plant #282 did not remove the zinc from the waste stream. This plant was the smallest producer of sodium bisulfite of the plants sampled. The waste flows varied from 0.102 m3/kkg for #987 to 9.68 m3/kkg at #586.

Model Plant Selection

Waste water flow - The sources of waste water include wet air scrubbers, filter backwash, floor washings, leaks, and spills. The unit flow rates ranged from 0.1m3/kkg to 0.3m3/kkg of product at the three plants for which 308 Questionnaires were

TABLE 24-6. FLOW AND POLLUTANT CONCENTRATION DATA OF THE SAMPLED WASTE STREAMS FOR PLANT #282 PRODUCING SODIUM BISULFITE

Waste Stream	Flow m^3/kkg	TSS kg/kkg	COD kg/kkg	Zn kg/kkg	Cu kg/kkg
Untreated waste	2.67	0.237	4.04	0.0067	0.001
Treated waste	2.67	0.424	2.61	0.0068	0.00085

TABLE 24-7. FLOW AND POLLUTANT CONCENTRATION DATA OF THE SAMPLED WASTE STREAMS FOR PLANT #586 PRODUCING SODIUM BISULFITE

Waste Stream	Flow m^3/kkg	TSS kg/kkg	COD kg/kkg	Zn kg/kkg	Cu kg/kkg
MBS Sump #1	9.68	0.191	1.12	0.0067	0.011
MBS Sump #2	9.68	0.051	0.455	0.0025	0.00031
Amine Oxidation Pond	2.77	2.43	2.33	0.0031	0.00028
$ZnSO_4$ Pond Effluent	78.54	11.85	0.759	1.38	0.0022
Lime Treatment Influent	109.7	10.76	28.55	-	0.0040
Truck Washdown	0.134	0.0117	0.0975	0.00517	2.69×10^{-6}
SO_2 Wastes	85.86	1.97	52.5	-	-
Final Treated Effluent	188.3	4.27	21.70	-	-

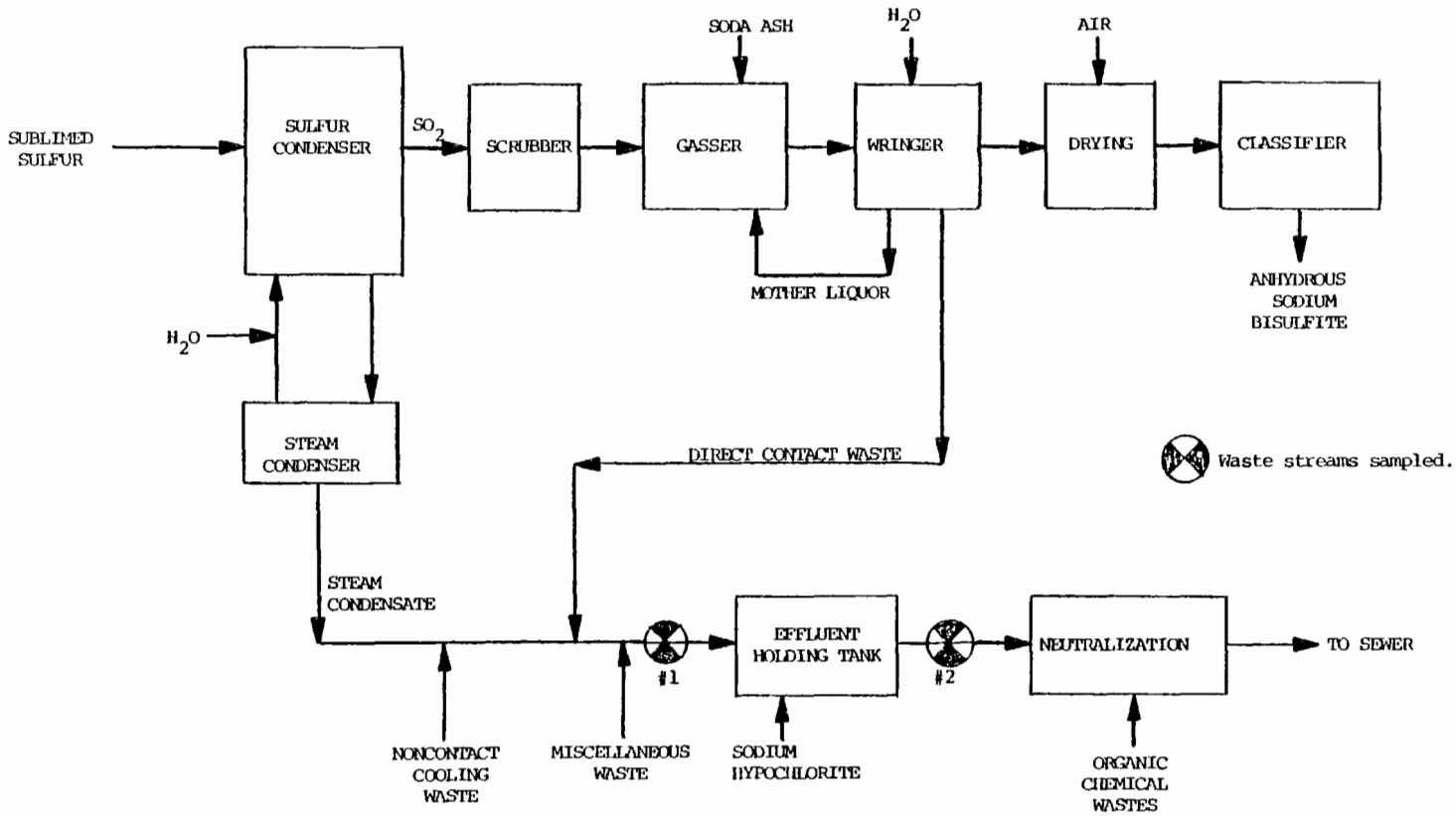

Figure 24-1. General process flow diagram at Plant #282 showing the sampling points.
Sodium Bisulfite Manufacture

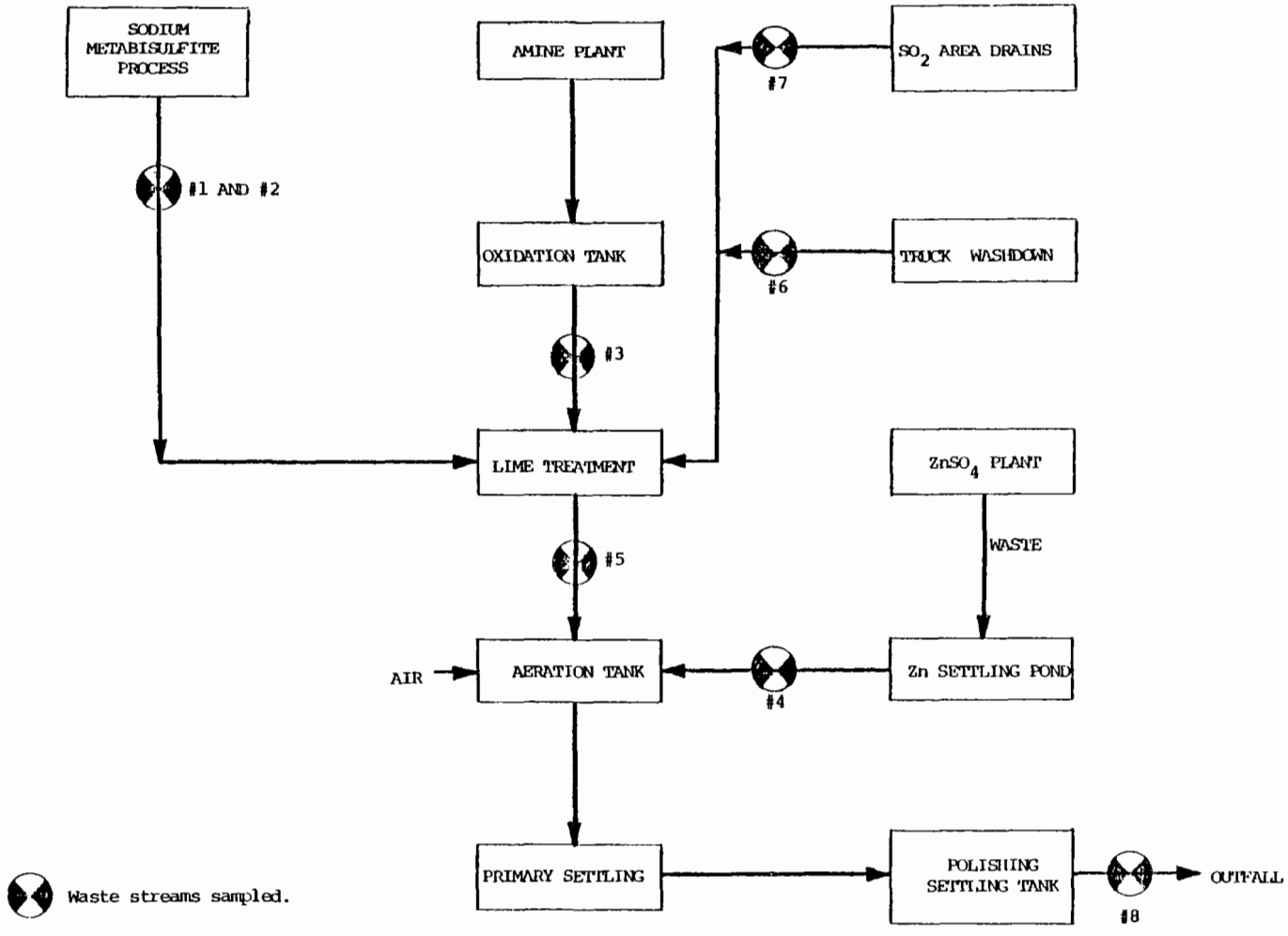

Figure 24-2. General flow diagram at Plant #586 showing the sampling points.
Sodium Bisulfite Manufacture

TABLE 24-8. FLOW AND POLLUTANT CONCENTRATION DATA OF THE SAMPLED WASTE STREAMS FOR PLANT #987 PRODUCING SODIUM BISULFITE

Waste Stream	Flow m^3/kkg	TSS kg/kkg	COD kg/kkg	Zn kg/kkg	Cu kg/kkg
No.1 Filter Wash	0.051	0.113	1.42	$7.1x10^{-5}$	$1.8x10^{-5}$
Floor wash, spills, etc.	0.0123	0.0457	0.299	$4.4x10^{-5}$	$1.11x10^{-5}$
No.2 Filter Wash	0.0386	0.0052	0.908	$3.9x10^{-5}$	$3.57x10^{-5}$
Treatment Influent (1+2+3)	0.102	0.315	3.46	$2.4x10^{-4}$	$7.5x10^{-5}$
54 Hour Aeration	0.133	0.375	1.19	$2.4x10^{-4}$	$7.5x10^{-5}$
Treated Effluent	0.133	0.0031	1.02	$7.99x10^{-7}$	$3.6x10^{-5}$

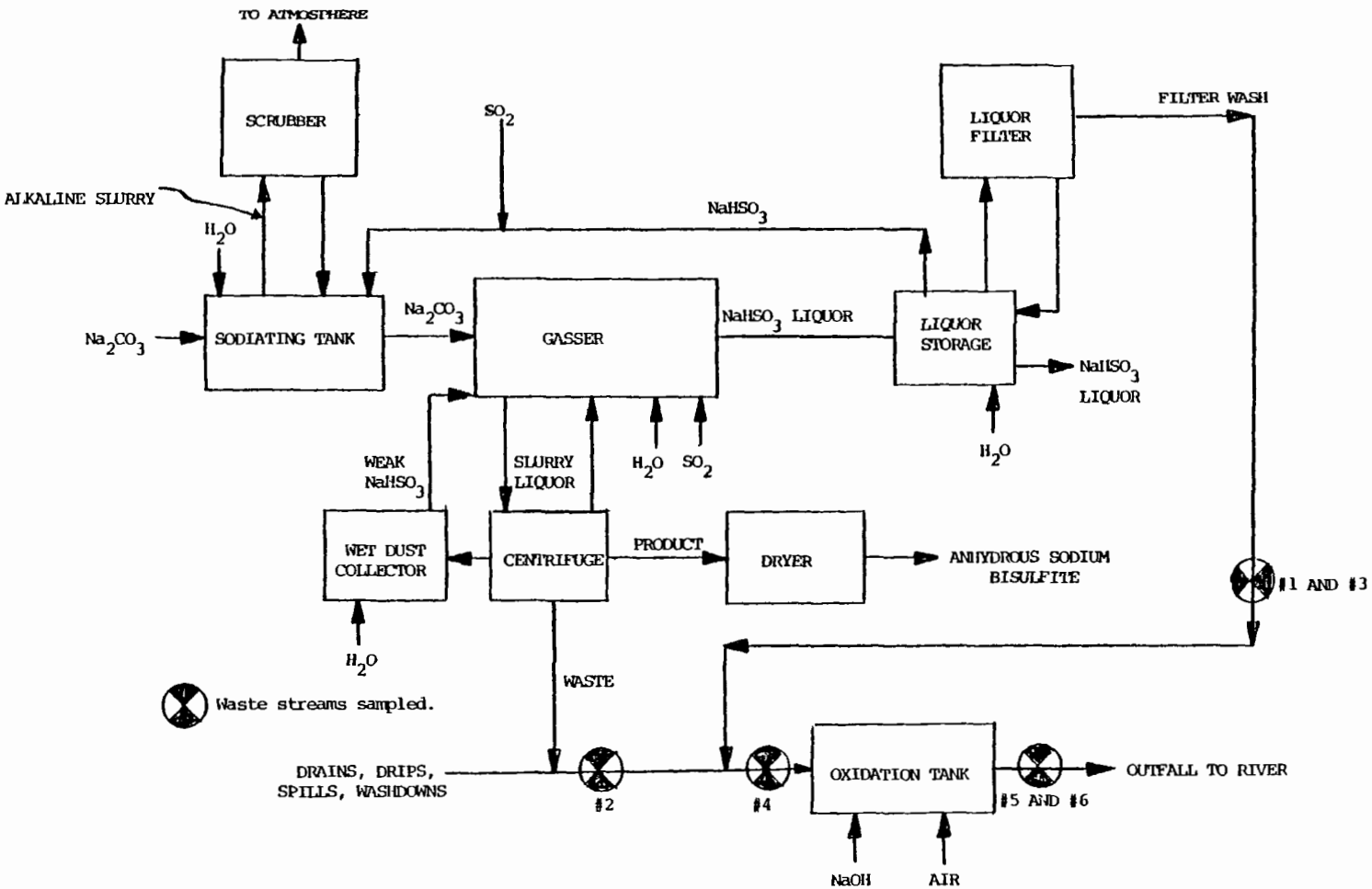

Figure 24-3. General process flow diagram at Plant #987 showing the sampling points. Sodium Bisulfite Manufacture

available. The average was approximately 0.2m3/kkg and this was used for the model plant.

Production - Sodium bisulfite production ranges from 4770 kkg/yr to 31,800 kkg/yr at the three plants for which data was available. The average production is 17,800 kkg/yr. The production rates at the three plants were used as the model plant production rates. The operational mode is continuous and is assumed to run 350 days per year.

Solid wastes - In the production of sodium bisulfite and process waste treatment there is little solid waste generation, although precipitation of zinc hydroxide may result in small quantities of filter cake requiring disposal. The model plants assumed no significant solid waste production.

Treatment chemicals - Caustic soda is needed to adjust the pH to 9.5. The only other requirement is air to oxidize the waste. For the model plant, the caustic soda dosage was assumed to be 0.195 kg//kkg.

24.2 TECHNOLOGY BASED POLLUTION ABATEMENT

24.2.1 Advanced Level Treatment Applications

Priority Pollutants to be Controlled

Priority pollutants should not normally be present in wastes originating solely from the manufacture of sodium bisulfite from sodium carbonate and sulfur dioxide. However, it is reported that some sources of sodium carbonate contain zinc and other trace metals in measurable amounts. Therefore, a treatment system to control zinc is proposed. If no zinc is found at a specific plant, Levels 2 and 3 of the treatment models would not be necessary.

Dissolved zinc was found in some sodium bisulfite waste waters during the sampling program. Since no use of zinc was found in the process, it might be assumed that zinc enters the waste stream by corrosion of galvanized metals, by coproduct operations or from nonprocess zinc compounds used by the industry.

Removal Technologies Available

Zinc is readily precipitated at pH values between 8.4 and 10.0 or when reacted with sulfides in various forms. Zinc ions can also be adsorbed from clarified solutions by ion exchange

resins and precipitated by starch xanthates.

Selection of Appropriate Technology

In addition to controlling zinc, the treatment process selected must control the COD associated with bisulfites.

BPT (Level 1) - Batch aeration at pH 9.5 was chosen as the most cost-effective method of lowering the COD associated with the primary pollutant, sodium bisulfite. Solution of CO_2 from the air during aeration reduces the pH below 9 before discharge.

Level 2 - Aerated effluent from the BPT system is chlorinated to complete COD removal, and is then filtered to remove finely divided suspended matter carried through or produced in the BPT system, particularly if zinc is present in the incoming wastes.

Level 3 - Ferrous sulfide is applied ahead of the Level 2 dual media filter, to precipitate any residual zinc by the more effective sulfide process.

Flow Diagrams

Level 1	Figure 24-4
Level 2	Figure 24-5
Level 3	Figure 24-6

Wastes are treated in daily batches, followed by continuous cumulative aeration and weekly filtration of five accumulated daily batches, to suit a five-day, 40-hour production schedule.

Equipment Functions - In Level 1, the raw wastes are received in a one-day holding tank, adjusted to pH 9.5 with caustic soda and jet aerated by recirculation of the daily batch. At the end of each day the batch is transferred to a reaction tank sized for one week's flow, which is continuously aerated by recirculation through air aspirators. On the sixth day the aerated weekly batch is discharged directly (Level 1) or through a dual media filter (Levels 2 and 3). At Level 2 continuous aeration is terminated early on the sixth day and the weekly batch is recirculated through the hydraulic eductor of a gas chlorinator to oxidize any residual COD. At Level 3, ferrous sulfide is added before filtering, to precipitate any residual zinc. If COD limits can be consistently met by long-period aeration, and if zinc is not found in the raw wastes, the advanced levels of treatment would serve no purpose.

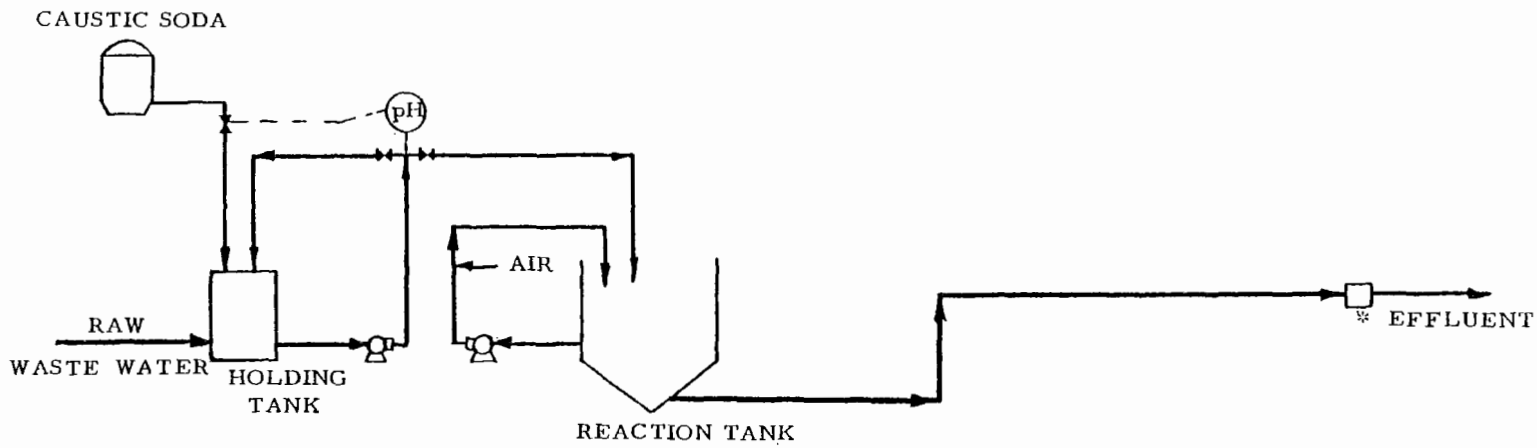

*Includes flow monitoring, pH monitoring, and sampler.

Figure 24-4. Waste water treatment Level 1 for sodium bisulfite subcategory - batch process

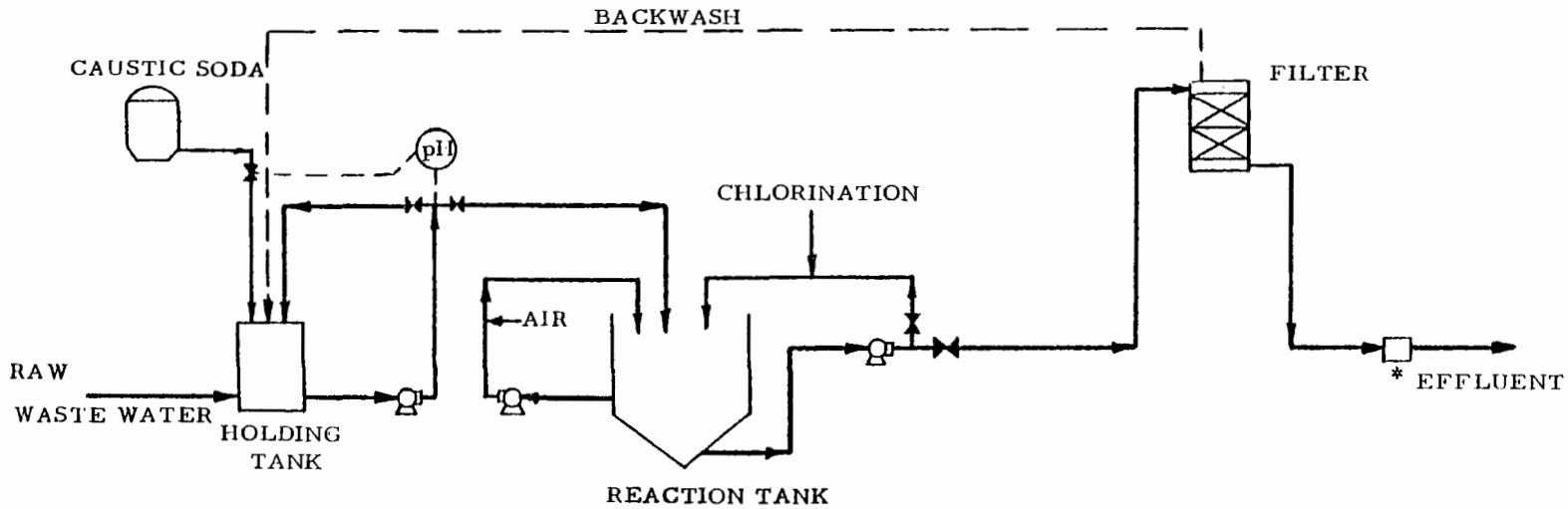

* Includes flow monitoring, pH monitoring, and sampler.

Figure 24-5. Waste water treatment Level 2 for sodium bisulfite subcategory - batch process.

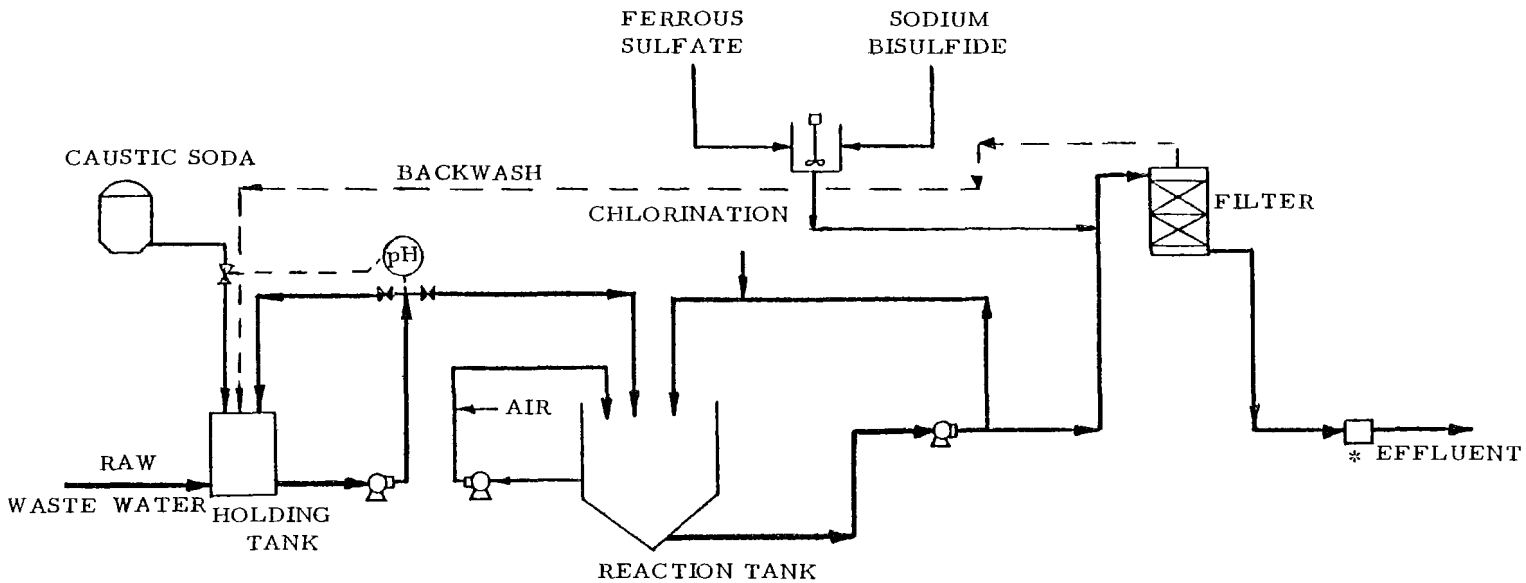

*Includes flow monitoring, pH monitoring and sampler.

Figure 24-6. Waste water treatment Level 3 for sodium bisulfite subcategory.

Chemicals and Handling - Caustic soda solution, chlorine and ferrous sulfide are used in the treatment processes. Caustic soda and chlorine, are common industrial chemicals which are fed by conventional equipment designed to minimize leaks, spills, and hazards to personnel. Ferrous sulfide is prepared by mixing ferrous sulfate with sodium bisulfide under well-ventilated conditions. When the usual precautions are taken in the proper handling of corrosive and toxic chemicals, there should be no special problems in applying the proposed technologies.

Separation and Removal of Solids - No solids are formed in the proposed treatment, with the possible exception of small amounts of zinc hydroxide and zinc sulfide in the filter backwash, if zinc should be present in the raw wastes. In that event, the precipitated solids returned to the holding tank during backwashing will settle in the hopper bottom of the reaction tank. As necessary, these solids can be drawn off to a small earthen drying bed, where liquids will drain into the soil and the insoluble zinc compounds will remain at the site.

Monitoring Requirements - Internal process monitoring will be done with standard field equipment measuring pH, dissolved oxygen and chlorine. If zinc is present in the raw materials, a periodic laboratory analysis for zinc should be made on the final effluent. Monitoring for dissolved sulfide should not be necessary, since excess sulfide will react with iron from the ferrous sulfate applied in Level 3, oxidizing to insoluble ferric sulfide.

24.2.2 Estimated Performance of BPT Systems

Waste waters from the production of sodium bisulfite are characterized by high concentrations of COD and small flow rates. The COD load results from the presence of product material in filter wash waters and general maintenance and cleanout operations.

Raw waste loads found in screening and verification were presented above. The only priority pollutant which might require regulation is zinc. Although zinc was found in all three of the plants sampled, its source has not been determined.

BPT technology has been specified as extended aeration to oxidize COD. This technology should achieve 95 percent removal of COD. Treated effluent quality and treatment practices at three plants are presented in Table 24-9.

TABLE 24-9. TREATMENT PRACTICES AND VERIFICATION SAMPLING AT SODIUM BISULFITE PLANTS

Plant	Treatment	Treated Effluent TSS mg/l	TSS kg/kkg	COD mg/l	COD kg/kkg	Zn mg/l	Zn kg/kkg	F (m
#282	Caustic neutralization sodium hypochlorite oxidation	159	0.424	979	2.61	2.54	0.0068	2.
#586*	Lime pH adjustment aeration, and settling	22.7	--	115.3	--	0.059	--	1

* Combined treatment with other process wastes.

Base Level Performance Characteristics for Conventional Pollutant Removal

Based on a 95 percent COD removal efficiency by extended aeration, implementation of BPT technology will achieve the effluent quality presented in Table 24-10.

Base Level Performance for Priority Pollutant Removal

Table 24-10 also presents effluent quality achievable through implementation of BPT for zinc.

Pretreatment Applications

One plant manufacturing sodium bisulfite presently discharges to a POTW. Since the major pollutants in this subcategory, TSS and COD, are compatible with conventional sewage treatment, BPT technoloy is applicable for pretreatment. Also, since waste water flow volumes are small in this subcategoy, limitations for suspended solids can be increased for pretreatment.

24.2.3 Estimated Performance of Advanced Level Systems

Advanced Level Performance Estimates for BPT and Priority Pollutant Removal

Table 24-11 and 24-12 presents estimated achievable effluent quality through implementation of these technologies.

Pretreatment Applications

As discussed earlier, BPT technoloy is recommended for pretreatment of sodium bisulfite wastes.

New Source Applications

Examination of the alternative treatment technologies proposed for this subcategory has led to the conclusion that Level 2 technology is applicable to new sodium bisulfite facilities.

TABLE 24-10 CONTROL PARAMETER LIMITATIONS
SUBCATEGORY: Sodium Bisulfite
Level of Treatment: 1
Waste Water Flow: 0.2 m3/kkg

Pollutant	Subcategory Performance (mg/l)	(1) VFR	Quality Limit (mg/l)		Emission Limit (kg/kkg)	
			30 day Aver	24 hr Max	30 day Aver	24 hr Max
BPT Pollutants:						
Total Suspended Solids, TSS	23(2)	2.0	37.5	75	0.0075	0.015
Chemical Oxygen Demand, COD	980(2)	2.0	500	1000	0.10	0.20
Proposed Priority Pollutants						
Zinc, Zn	0.2(2)	2.0	0.5	1.0	0.0001	0.0002

(1) - VFR: ratio of the 24 hour variability factor to the 30 day variability factor.

(2) - Verification sampling

TABLE 24-11 CONTROL PARAMETER LIMITATIONS
SUBCATEGORY: Sodium Bisulfite
Level of Treatment: 2
Waste Water Flow: 0.2 m3/kkg

Pollutant	Treatability (mg/l)	(1) VFR	Quality Limit (mg/l)		Emission Limit (kg/kkg)	
			30 day Aver	24 hr Max	30 day Aver	24 hr Max
BPT Pollutants:						
Total Suspended Solids, TSS	15	2.0	15	30	0.003	0.006
Chemical Oxygen Demand, COD	100	2.0	100	200	0.02	0.04
Proposed Priority Pollutants						
Zinc, Zn	0.4	2.0	0.4	0.8	0.00008	0.00016

(1) - VFR: ratio of the 24 hour variability factor to the 30 day variability factor.

TABLE 24-12 CONTROL PARAMETER LIMITATIONS
SUBCATEGORY: Sodium Bisulfite
Level of Treatment: 3
Waste Water Flow: 0.2 m3/kkg

Pollutant	Treatability (mg/l)	(1) VFR	Quality Limit (mg/l)		Emission Limit (kg/kkg)	
			30 day Aver	24 hr Max	30 day Aver	24 hr Max
BPT Pollutants:						
Total Suspended Solids, TSS	15	2.0	15	30	0.003	0.006
Chemical Oxygen Demand, COD	100	2.0	100	200	0.02	0.04
Proposed Priority Pollutants						
Zinc, Zn	0.2	2.0	0.2	0.4	0.00004	0.00008

(1) - VFR: ratio of the 24 hour variability factor to the 30 day variability factor.

24.2.4 Cost Estimates

Discussion

The cost estimates of three models having different production levels are presented in Tables 24-13, 24-14 and 24-15. Annual costs for three treatment levels as a function of production are shown graphically in Figure 24-7. Treatment cost per metric ton of product is shown in Figure 24-8.

Table 24-16 gives a summary of the unit cost distribution between amortization operation and maintenance. Cost components at various production and levels of treatment are also shown.

Summary

Cost estimates developed for the first level of treatment indicate that labor and amortization cost has a significant impact on the total annual costs. At the second and third level of treatment, for low production, operation and maintenance has a significant impact on the additional annual costs. At medium and high production, amortization and operation and maintenance costs constitute the major portion of the additional costs.

TABLE 24-13. MODEL PLANT TREATMENT COSTS

Subcategory SODIUM BISULFITE		Type of Regulation BAT
Production	4,770 metric tons per year (5,258 tons per year)	
	13 metric tons per day (15 tons per day)	
Waste water flow	2.8 cubic meters per day.	

	LEVEL OF TREATMENT*		
	FIRST	SECOND	THIRD
A. INVESTMENT COST			
Construction	$5,550	$1,650	$1,750
Equipment in place, including piping, fittings, electrical work and controls.....	47,800	20,500	16,200
Monitoring equipment in place.....	9,000		
Engineering design and inspection.....	12,470	4,430	3,590
Incidentals, overhead, fees, contingencies...	12,470	4,430	3,590
Land.....	1,800		
TOTAL INVESTMENT COST	$89,090	$31,010	$25,130
B. OPERATION AND MAINTENANCE COST			
Labor and supervision.	$15,000	$1,000	$2,000
Energy.....	1,600	60	75
Chemicals.....	400	1,200	1,210
Maintenance.....	8,729	3,101	2,513
Taxes and insurance...	2,672	930	753
Residual waste disposal.....			
Monitoring, analysis and reporting.....	2,500	1,250	1,250
TOTAL OPERATION AND MAINTENANCE COST	$30,901	$7,541	$7,801
C. AMORTIZATION OF INVESTMENT COST	$14,202	$5,045	$4,088
TOTAL ANNUAL COST	$45,103	$12,586	$11,889

*First level represents the base cost of treatment system.
Other levels represent the incremental cost above base cost.

TABLE 24-14. MODEL PLANT TREATMENT COSTS

Subcategory SODIUM BISULFITE — Type of Regulation BAT

Production 16,900 metric tons per year (18,632 tons per year)
48 metric tons per day (53 tons per day)

Waste water flow 10 cubic meters per day.

	LEVEL OF TREATMENT*		
	FIRST	SECOND	THIRD
A. INVESTMENT COST			
Construction	$8,500	$4,100	$4,200
Equipment in place, including piping, fittings, electrical work and controls.....	82,400	37,150	28,150
Monitoring equipment in place.....	9,000		
Engineering design and inspection.....	19,980	8,250	6,470
Incidentals, overhead, fees, contingencies...	19,980	8,250	6,470
Land.....	1,800		
TOTAL INVESTMENT COST	$141,660	$57,750	$45,290
B. OPERATION AND MAINTENANCE COST			
Labor and supervision.	$15,000	$1,000	$2,000
Energy.....	3,100	90	110
Chemicals.....	1,340	2,560	2,600
Maintenance.....	13,986	5,775	4,529
Taxes and insurance...	4,249	1,732	1,358
Residual waste disposal.....			
Monitoring, analysis and reporting.....	2,500	1,250	1,250
TOTAL OPERATION AND MAINTENANCE COST	$40,175	$12,407	$11,847
C. AMORTIZATION OF INVESTMENT COST	$22,755	$9,395	$7,368
TOTAL ANNUAL COST	$62,930	$21,802	$19,215

*First level represents the base cost of treatment system.
Other levels represent the incremental cost above base cost.

TABLE 24-15. MODEL PLANT TREATMENT COSTS

Subcategory SODIUM BISULFITE — Type of Regulation BAT

Production 31,800 metric tons per year (35,059 tons per year)
90 metric tons per day (100 tons per day)

Waste water flow 19 cubic meters per day.

	LEVEL OF TREATMENT*		
	FIRST	SECOND	THIRD
A. INVESTMENT COST			
Construction	$12,400	$6,250	$6,450
Equipment in place, including piping, fittings, electrical work and controls.....	123,900	63,700	64,400
Monitoring equipment in place.....	9,000		
Engineering design and inspection.....	29,060	13,990	14,170
Incidentals, overhead, fees, contingencies...	29,060	13,990	14,170
Land.....	3,000		
TOTAL INVESTMENT COST	$206,420	$97,930	$99,190
B. OPERATION AND MAINTENANCE COST			
Labor and supervision.	$15,000	$1,000	$2,000
Energy.....	6,200	90	132
Chemicals.....	2,700	4,840	4,910
Maintenance.....	20,342	9,793	9,919
Taxes and insurance...	6,192	2,937	2,975
Residual waste disposal.....			
Monitoring, analysis and reporting.....	2,500	1,250	1,250
TOTAL OPERATION AND MAINTENANCE COST	$52,934	$19,910	$21,186
C. AMORTIZATION OF INVESTMENT COST	$33,096	$15,933	$16,138
TOTAL ANNUAL COST	$86,030	$35,843	$37,324

*First level represents the base cost of treatment system.
Other levels represent the incremental cost above base cost.

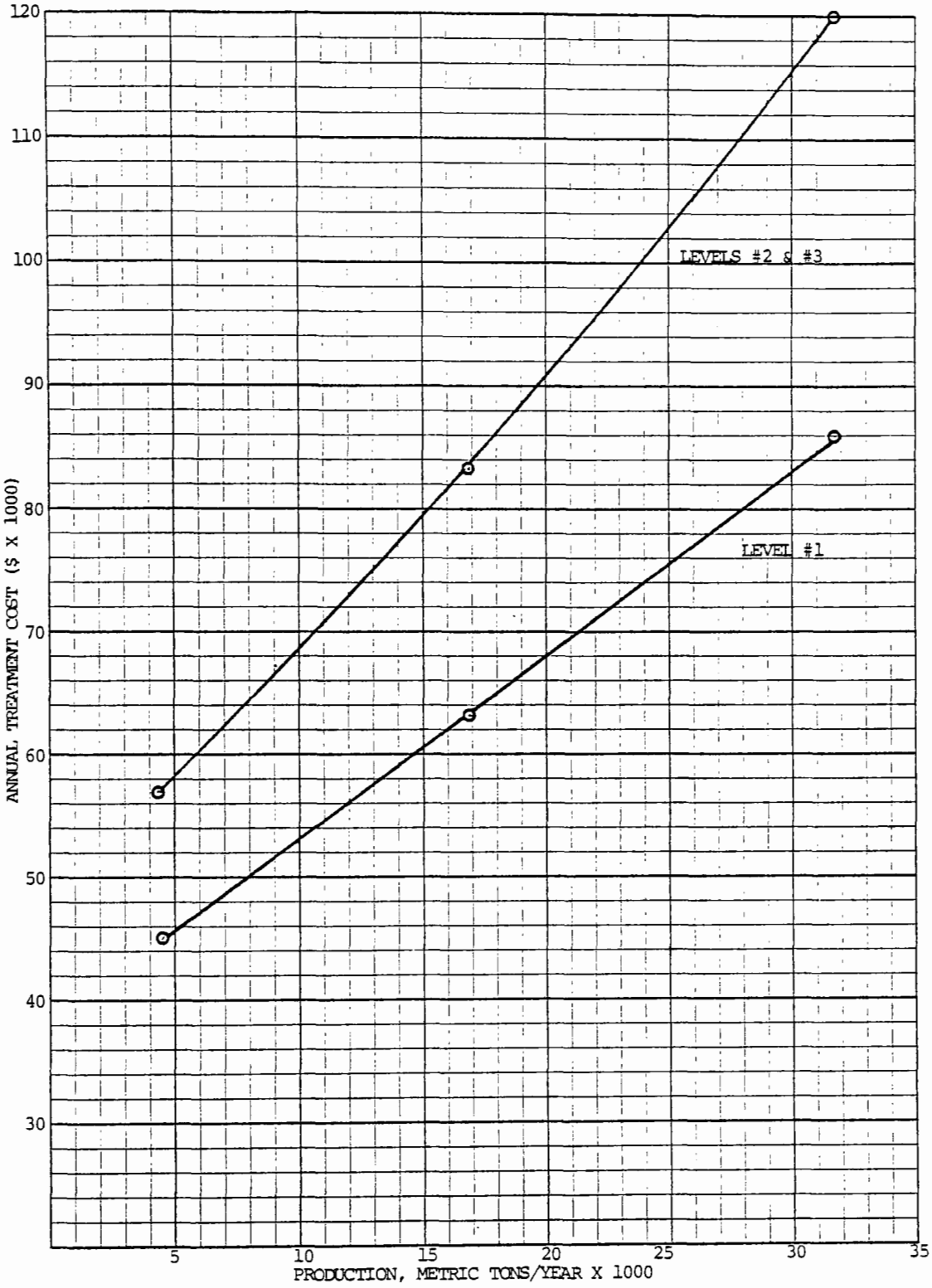

Figure 24-7. Variation of annual treatment cost with production for the Sodium Bisulfite Subcategory

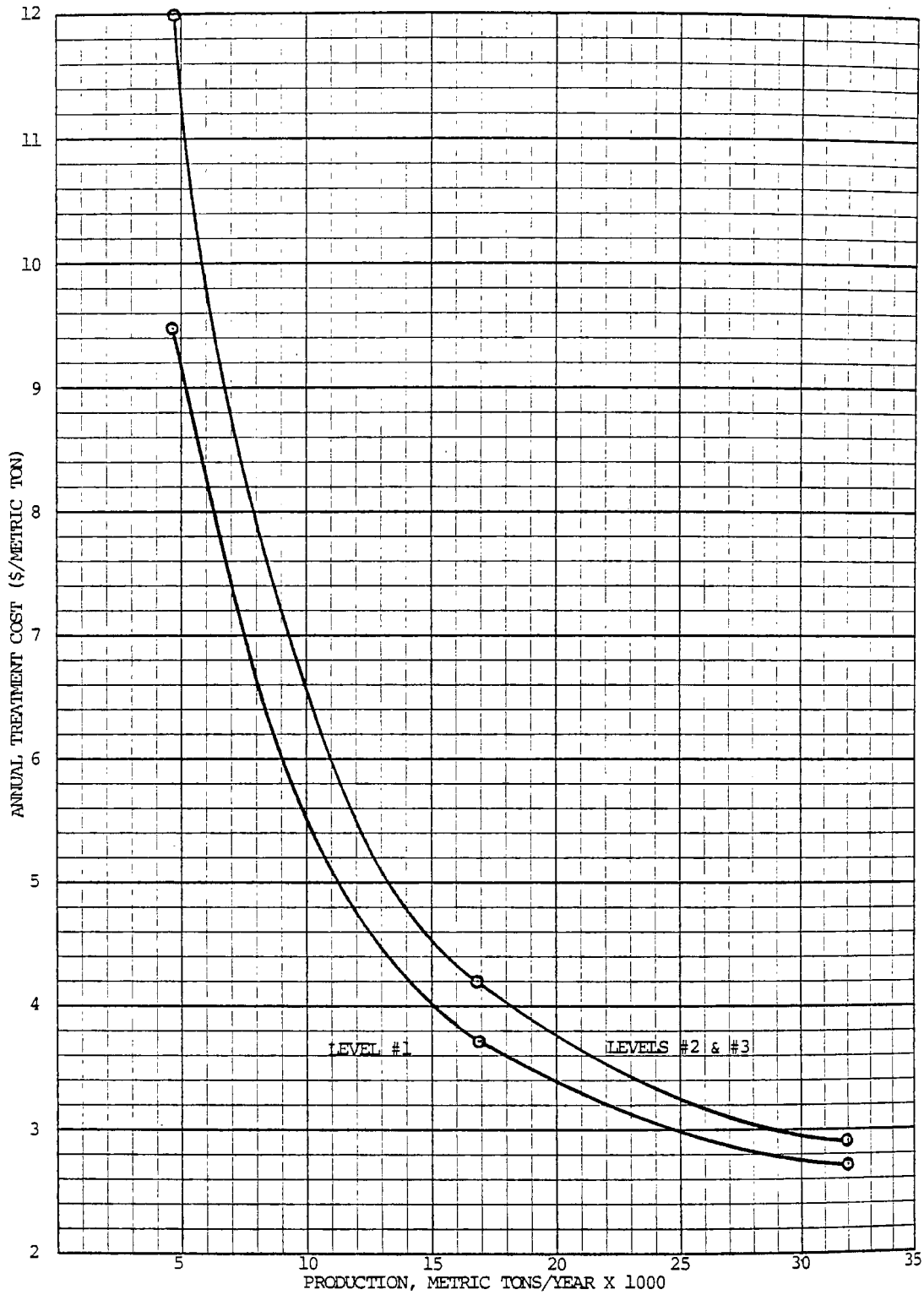

Figure 24-8. Variation of annual unit treatment cost with production (Sodium Bisulfite Manufacture)

TABLE 24-16 MODEL PLANT TREATMENT COSTS

Subcategory SODIUM BISULFITE Type of Regulation BAT

	PRODUCTION (kkg/yr)	FLOW (m3/day)	Annual Treatment Costs ($/kkg) LEVEL OF TREATMENT FIRST $	SECOND $	THIRD $	FOURTH $
Annual Operation and Maintenance	4,770	3	6.48	1.58	1.83	Not Applicable
	16,900	10	2.38	0.73	0.81	
	31,800	19	1.66	0.63	0.67	
Annual Amortization	4,770	3	2.98	1.06	1.11	
	16,900	10	1.35	0.56	0.57	
	31,800	19	1.04	0.50	0.51	
Total Cost	4,770	3	9.46	2.64	2.94	
	16,900	10	3.72	1.29	1.38	
	31,800	19	2.71	1.13	1.18	

SECTION 25

SODIUM HYDROSULFITE

25.1 ASSESSMENT OF THE WATER POLLUTION POTENTIAL

25.1.1 Industry Profile and Analytical Results

Most of the sodium hydrosulfite produced in the U.S. is sold in the merchant market. Sodium hydrosulfite is extensively used in dyeing (cotton) and in the printing industry. It is a powerful reducing agent and is used in wood pulp bleaching, reducing, and stripping operations in the food, vegetable oil and soap industries.

The industry profile data are presented in Table 25-1, while existing regulations are summarized in Table 25-2.

Priority pollutants found at significant concentrations in the raw waste during screening at Sodium Hydrosulfite - Formate Process Plant #672 were as follows:

Pollutant	Maximum Concentration Observed ug/l
Cadmium	43
Chromium	9300
Copper	1450
Lead	1294
Nickel	1665
Silver	128
Zinc	27412
Pentachlorophenol	373
Phenol	160
Cyanide	101
Mercury	28
Selenium	34

The plant was sampled using verification procedures. No plants were visited during the verification phase of the study.

TABLE 25-1 - SUBCATEGORY PROFILE DATA SUMMARY

SUBCATEGORY	SODIUM HYDROSULFITE (FORMATE PROCESS)
Total subcategory capacity rate	40,340 kkg/year
Total subcategory production rate	39,940 kkg/year
Number of plants in this subcategory	2
308 Data on file for	1
With total capacity of	20,450 kkg/year
With total production of	20,450 kkg/year
Representing capacity	50 percent
Representing production	51 percent
Plant production range:	
Minimum	
Maximum	
Average production	
Median production	
Average capacity utilization	100 percent
Plant age range:	
Minimum	
Maximum	
Wastewater flow range:	273 cubic meters/day
Minimum	
Maximum	
Volume per unit product:	4.68 cubic meters/kkg
Minimum	
Maximum	

Sources of data are Stanford Research Institute, Directory of Chemical Producers, U.S.A., 1977, U.S. Department of Commerce, Current Industrial Reports, December 1977; Energy and Environmental Analysis, Inc.; Draft Report, "Preliminary Economic Assessment of Effluent Limitations in the Inorganic Chemical Industry."

TABLE 25-2 - EXISTING REGULATIONS - EFFLUENT LIMITATION GUIDELINES

SUBCATEGORY Sodium Hydrosulfite

SUBPART BE (40CFR 415.570, 5/22/75)

		STANDARDS					
		BPCTCA		BATEA		NSPS	
Product Process	Parameters	Max.[1] kg/kkg (mg/l)	Avg.[2] k/kkg (mg/l)	Max. k/kkg (mg/l)	Avg. k/kkg (mg/l)	Max. k/kkg (mg/l)	Avg. k/kkg (mg/l)
Sodium Hydro-Sulfite	Reserved	Reserved		Reserved		Reserved	

[1]Max. = Maximum of any one day.

[2]Avg. = Average of daily values for thirty consecutive days shall not exceed.

A summary of daily and unit product raw waste loads for the plant sampled can be found in Table 25-3.

Based on the toal annual production of sodium hydrosulfite by the formate process and the average waste load generated per unit product, the estimated total priority pollutant waste loads generated each year for this particular process subcategory are as follows:

Pollutant	Waste Load (kg/year)
Cadmium	2.8
Chromium	5,590
Copper	76
Lead	28
Nickel	108
Silver	3.2
Zinc	440
Pentachlorophenol	28
Phenol	12
Cyanide	2.8
Mercury	0.26
Selenium	2.4

25.1.2 Process Waste Sources and Waste Water Treatment Data

General Process Description

Raw materials and process - In the formate process, sodium hydrosulfite is produced by reacting sodium formate solution, sodium hydroxide solution and liquid sulfur dioxide in the presence of a recycled stream of methanol solvent. The general reaction is:

$$2HCO2Na + 3NaOH + 3SO2 = Na2S204 + NaHC03 + Na2S03 + C0 + 2H20 \quad (1)$$

The operation occurs in several steps:

1. An aqueous solution of sodium formate is prepared and introduced into the reactor.

2. The recycled stream of methanol containing sulfur dioxide is introduced into the reactor.

3. The sodium hydroxide and sodium formate solutions, liquid sulfur dioxide, and recycled methanol are then contacted under pressure

TABLE 25-3. SUMMARY OF RAW WASTE LOADINGS FOUND AT A SODIUM HYDROSULFITE PLANT (FORMATE PROCESS)

Pollutant	Loadings	
	kg/day Average	kg/kkg Average
Priority		
Cadmium, Cd	0.0041	0.00007
Chromium, Cr	0.81	0.14
Copper, Cu	0.11	0.0019
Lead, Pb	0.041	0.0007
Nickel, Ni	0.16	0.0027
Silver, Ag	0.0045	0.00008
Zinc, Zn	0.63	0.011
Pentachlorophenol	0.04	0.0007
Phenol	0.017	0.0003
Conventional		
TSS	91.6	1.57
COD	1687	28.9

at slightly elevated temperatures.

Sodium hydrosulfite then precipitates and forms a slurry in the reactor. The coproduct, sodium sulfite, and sodium bicarbonate and carbon monoxide gas are formed.

There is a small amount of methyl formate produced in the reactor as a side reaction between the sodium formate and methanol:

$$HCO_2Na + CH_3OH = HCO_2CH_3 + NaOH \qquad (2)$$

This side reaction product remains in the recycling methanol during the entire process. As a result, some of the methanol must be periodically purged from the recycle system to avoid excessive buildup of this impurity.

The resulting slurry of sodium hydrosulfite in the solution of methanol, methyl formate and coproducts is sent to a pressurized filter operation which recovers the crystals of sodium hydrosulfite. The crystals are dried in a steam heated rotary drier, recovered and packaged. The filtrate and backwash liquors from the filter operation are sent to the solvent recovery system as is the vaporized methanol from the drying operation. The drying of the sodium hydrosulfite filter cake must be done very carefully as it is heat sensitive and tends to decompose to sulfite.

A general process flow diagram for Plant #672 can be found in Figure 25-1.

Water Use and Waste Source Inventories

Water use - Water is used in the process as make up for the reaction solutions and for steam generation in the rotary dryers. Water is also used for noncontact cooling in the reactor gas vent scrubbers and dryers, as well as pump seals and washdowns.

Sources of waste water

A. The strongest process waste is the aqueous residue from the distillation column bottoms (solvent recovery system). This waste contains concentrated reaction coproducts and is purged from the system at a rate of approximately 14,000 GPD. At plant #672 this waste is sent to a coproduct pond where it is held and either sold to the pulp and paper industry or bled into the treatment system.

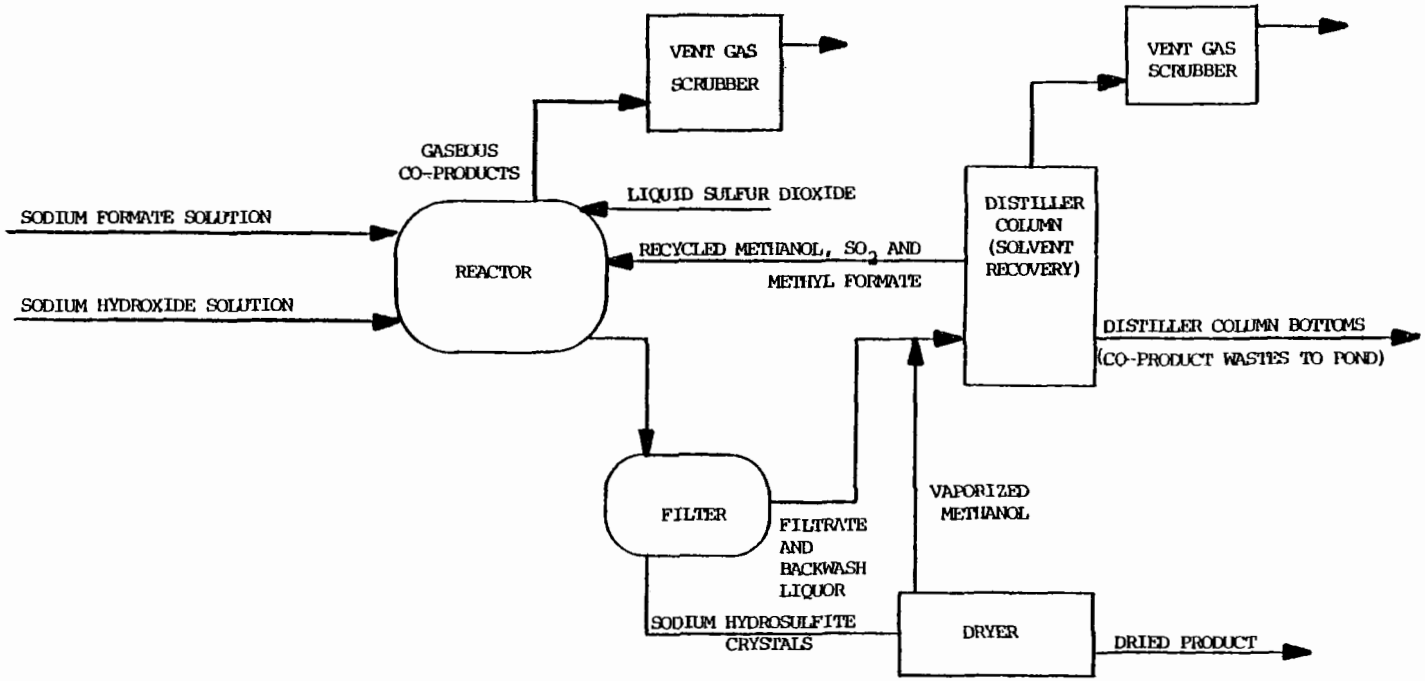

Figure 25-1. General process flow diagram at Plant #672
Sodium Hydrosulfite Manufacture

B. The dilute wastes from process are contributed from leaks, spills, washdowns, and tank car washing. At Plant #672, this is collected in a sump and then sent to the biological treatment system.

C. Cooling tower and boiler blowdown constitutes a noncontaminated waste water source. This is sent to the final compartment of the chlorine contact tank, without treatment for discharge with the combined effluent of the treatment plant.

D. The vent gas scrubbers create a waste water source which is sent to the methanol recovery distillers for recycle. This waste eventually goes to the coproduct pond with the distilling column bottoms.

A general flow diagram of Plant #672 showing process waste sources and sampling points is shown in Figure 25-2. The sources of waste water for each sampling point are as follows:

1. Coproduct pond.
2. Dilute waste from sodium hydrosulfite process area at sumps.
3. Combined influent to treatment. This point collects waste from points 1 and 2, plus the sodium bisulfite waste stream.
4. Treated effluent at the outfall.

A tabulation of raw waste flows, concentrations and loadings for the two waste steams to treatment at Plant #672 can be found in Table 25-4.

Control and Treatment Practices

The Best Practical Technology for sodium hydrosulfite waste treatment is equalization, aeration (biological oxidation) clarification and final settling and equalization prior to discharge.

Treatment practices - The only plant visited during the screening program was Plant #672. Verification sampling procedures were used. Because of the nature of the two waste streams, each one is handled differently. The dilute waste is first sent to a holding pond where the flow equalized and the waste mechanically aerated. This pond also contains approximately 1500 gallons per day of waste from a sodium bisulfite process. The pond effluent is pH adjusted with sulfuric acid and sent to an aeration basin. A nitrogen-phosphate fertilizer and urea are added here for nutrients. Approximately 3500 gallons per day of sanitary waste and up to 25,900 gallons per day of clean dilution water are also added to the aeration basin. This basin formerly had mechanical aerators, but now has air diffusers which allow better

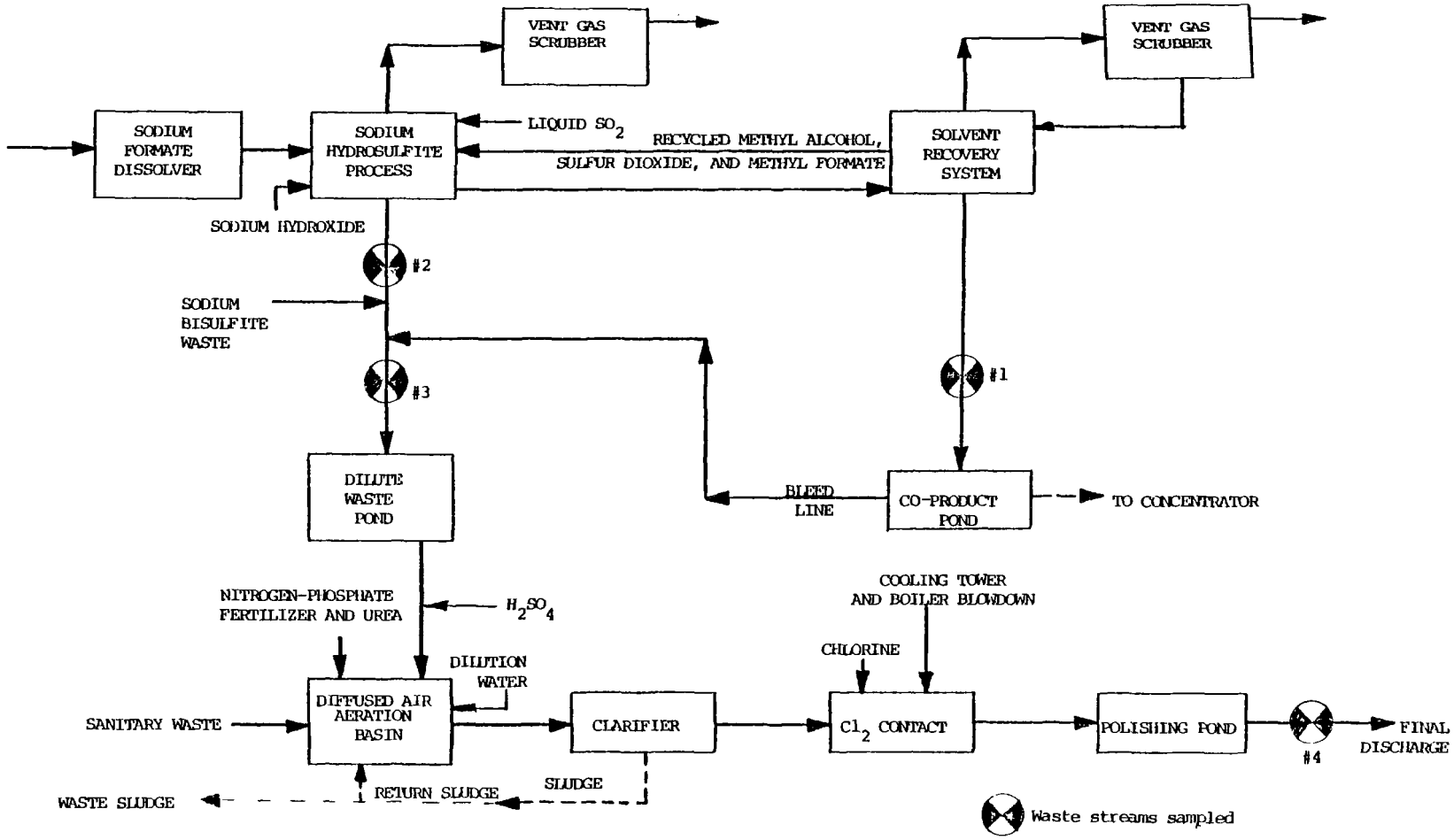

Figure 25-2. General process flow diagram at Plant #771 showing the sampling points.
Sodium Hydrosulfite Manufacture

TABLE 25-4. FLOW AND POLLUTANT CONCENTRATION DATA OF THE SAMPLED WASTE STREAMS FOR PLANT #672 PRODUCING SODIUM HYDROSULFITE

Parameter	Stream #1 (Coproduct)		Stream #2 (Dilute Waste)	
Flow m^3/kkg	0.91		1.87	
Pollutant	mg/l	kg/kkg	mg/l	kg/kkg
Chemical Oxygen Demand, COD	77,922	70.9	14,628	27.4
Total Suspended Solids, TSS	61	0.056	263	0.49
Zinc, Zn	24	0.022	0.77	0.0014

All values are averages of three days of sampling.

temperature control for biological oxidation. The effluent from aeration goes to a clarifier. Approximately 14,000 gallons per day of the settled sludge is returned to the aeration basin and 2400 gallons per day is sent to drying piles on site. More dilution water is added to the clarifier when needed for TDS control. The overflow from the clarifier goes to a chlorine contact tank because of the sanitary waste. The blowdown water from the cooling tower and boilers is added to the final chamber of the chlorine contact tank. The effluent from this unit is sent to a final polishing pond for settling and equalization before discharge.

The coproduct waste from the distilling column bottoms is sent to a lined coproduct pond at a rate of 14,000 gallons per day and held for one of two possible disposal methods. When there is a market for the coproducts, the waste is concentrated and sold to the pulp and paper industry. At times when this is not possible, and the pond reaches near capacity, the waste is bled into the treatment system described above through the dilute waste holding pond.

A general flow diagram of the biological treatment system is also included in Figure 25-2.

Table 25-5 shows the total combined input to the treatment system, the treated effluent quality and efficiency of the system.

Evaluation of Production and Waste Flow Data

Only two plants utilize the formate process in this subcategory. Data from the one plant sampled can be considered representative of this process for both plants. The other plant in this subcategory has an identical, though slightly smaller, production process. However, the waste treatment system is different, and on a larger scale, due to the large loadings of waste from several other products. Because of the large product mix, representative treatment data for sodium hydrosulfite waste water only cannot be analyzed for this plant. Plant #672 was visted for this reason.

Table 25-5 shows that the treatment efficiency for chemical oxygen demand removal is 95.2 percent and total suspendend solids removal is 97 percent. Zinc is shown here, having the highest concentration of several metals found at significant levels, with a removal of almost 98 percent. The higher effluent flow is due to the addition of the sanitary waste, dilution water, and cooling tower and boiler blowdown to the treatment system. These sources should have little or no effect on the analyzed and calculated values for treatment plant efficiencies. At the time screening sampling was conducted at Plant #672, none of the

TABLE 25-5. INFLUENT AND EFFLUENT QUALITY AND EFFICIENCY FOR PLANT #672 WASTE WATER TREATMENT SYSTEM FOUND DURING SCREENING SAMPLING

Parameter	Stream #3 (Raw Influent)		Stream #4 (Treated Effluent)		% Removal
Flow m^3/kkg	1.87		4.68*		
Pollutant	mg/l	kg/kkg	mg/l	kg/kkg	
Chemical Oxygen Demand, COD	15,487	29.0	740	3.46	95.2%
Total Suspended Solids, TSS	843	1.58	25	0.12	97.0%
Zinc, Zn	5.85	0.011	0.122	0.00057	97.9%

* Higher flow due to the addition of Sanitary Waste and Dilution Water to the aeration basin plus cooling tower and boiler blowdown to the chlorine contact tank.

All values are an average of three days of sampling.

coproduct waste water was being sent to the biological treatment system. As a result, the sodium hydrosulfite process waste being treated was from the dilute waste area only.

Model Plant and BPT Treatment System Specifications

The specifications of the waste input parameters and the design of the model plant BPT level treatment system are based on the foregoing information presented on Plant #672.

In this subcategory, commercial fertilizer and urea are added to stimulate growth of the biomass employed in biological treatment, and not for direct reaction with a residual pollutant.

Therefore, the chemicals used to not bear a fixed relationship to the plant production in units of sodium hydrosulfite.

Organic solids generated in the model treatment system are assumed to be disposed of on land at the site, without a separate cost for sludge disposal.

25.2 TECHNOLOGY BASED POLLUTION ABATEMENT

25.2.1 Advanced Level Treatment Applications

Priority Pollutants to be Controlled

Although sodium hydrosulfite is being manufactured by both the zinc process and the formate process, the trend is away from the zinc process for environmental reasons. This discussion concerns only the formate process, using a sodium formate feed stock from a source which appears to contain significant heavy metal impurities, (chromium, zinc, nickel, lead and copper) as well as trace amounts of cyanide. A predominant characteristic of sodium hydrosulfite waste is their high chemical oxygen demand resulting from various forms of sulfite, from methyl formate and from residual methanol after a solvent recovery process. Low levels of phenolic compounds are also found in the raw wastes.

In this subcategory an exception is made to the assumed exclusion of sanitary sewage from the waste stream. To utilize the nutrients and bacteria present in sewage as support for a biological oxidation system to control organics and COD, the plant sanitary wastes are included in the biological treatment.

The significant heavy metals appear largely in a coproduct waste stream which is often sold for use in the pulp and paper

industry. When no market exists, these wastes are bled into the product wastes. To provide the capability for treating the co-product wastes, the model plant design flow and pollutant load are based on continuous treatment of combined wastes.

Two levels of treatment are proposed, in order to deal with the priority pollutants which were found in the wastes of one plant sampled during the verification phase.

Removal Technologies Available

Practical technologies for controlling COD include various forms of mechanical and biological oxidation. For the relatively simple chemical oxidation of sulfite to sulfate, intimate contact with atmospheric oxygen is effective, using submerged air diffusers, induced air in a circulating system or mechanical surface aeration. For biochemical oxidation of resistant organics such as formates, phenols, chlorinated hydrocarbons, and methanol, trickling filtration, rotating biological discs or variations of the activated sludge process can provide intimate contact between organic pollutants and the microbiological organisms which use them as food.

Technologies for controlling heavy metals include alkaline precipitation, which is effective for the common heavy metals, and sulfide treatment, which precipitates nickel, zinc and copper, but does not control chromium without a subsequent pH increase. Other less appropriate metal removal techniques have been discussed under other subcategories.

Selection of Appropriate Technology

BPT (Level 1) - In the treatment system pH adjustment, biological oxidation, settling and chlorination are used to reduce COD and coliform organisms in the combined wastes, in accordance with existing plant practice.

Level 2 - The coproduct wastes are separately subjected to alkaline precipitation, to remove the toxic heavy metals and reduce arsenic, and then are combined with the product wastes for biological oxidation treatment and chlorination, as in Level 1.

If an actual formate process plant employs metal-free sodium formate in its process there is no reason to expect heavy metals in the process wastes and Level 2 treatment should not be necessary.

Flow Diagrams

BPT (Level 1) Figure 25-3

Level 2 Figure 25-4

Equipment Functions - Combined product and coproduct wastes are received in a mixed and aerated equalizing basin, adjusted to a neutral pH and aerated in a 4 day aerated lagoon, including 50 percent return of underflow to the influent. Plant sewage, nutrients and diluting water are added to the lagoon to promote biological oxidation of COD and organics. Lagoon effluent is clarified, chlorinated and sent to a polishing pond before discharge through effluent monitoring facilities. Cooling tower and boiler blowdown wastes enter the system after chlorination, since they require no treatment except settling of scale and inert debris in the polishing pond. Floating aerators are used in the equalization basin and compressed air is diffused in the aerated lagoon, for mixing and introduction of dissolved oxygen into the mixed liquor.

In the Level 2 treatment model, coproduct wastes are received in a separate 18-hour aerated and recirculated holding tank, which is pumped at average daily flow to a gravity clarifier, adding sufficient lime to reach a pH of 10.5. The clarifier overflow joins the product waste stream in the equalization basin of the BPT system. All features of the BPT system remain the same, since it was originally sized to handle the combined wastes.

Chemicals and handling - Sulfuric acid, lime, filter aid and chlorine are chemicals commonly used in waste treatment. When handled in corrosion resistant equipment designed for their use, no unusual hazards are expected. Raw sewage and 10-10-10 liquid fertilizer introduced into the aerated lagoon become thoroughly mixed and are eventually consumed in the biological oxidation process, constituting no threat to operating personnel. Chlorine, used for control of coliform bacteria, is received in ton containers and applied as a chlorine water solution using standard solution feed chlorination equipment. There are no unusual chemical handling problems in treating these wastes, provided the waste streams are kept at a neutral or alkaline pH.

Separation and disposal of solids - In the BPT system, waste activated sludge solids are assumed to be dried in sludge beds at the site, to be used as fertilizer for plant landscaping. Clarifier underflow from alkaline precipitation of coproduct waste in Level 2 is assumed to be sent to a sludge holding tank and dewatered at suitable intervals in a filter press, followed by hauling of solids to a chemical landfill. Filter press filtrate is returned to the holding tank for retreatment.

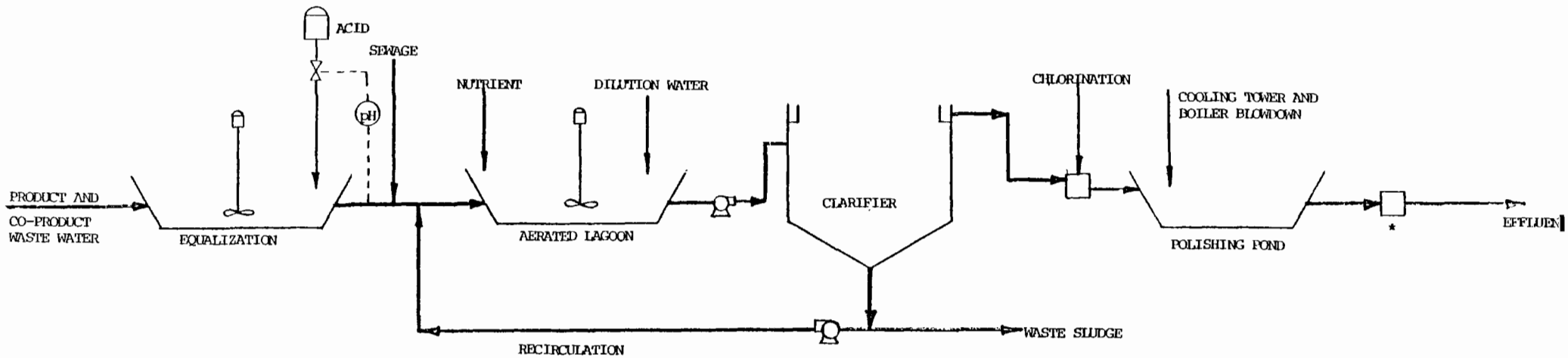

* Includes flow monitoring, pH monitoring and sampler.

Figure 25-3. Waste water treatment level 1 for sodium hydrosulfite.

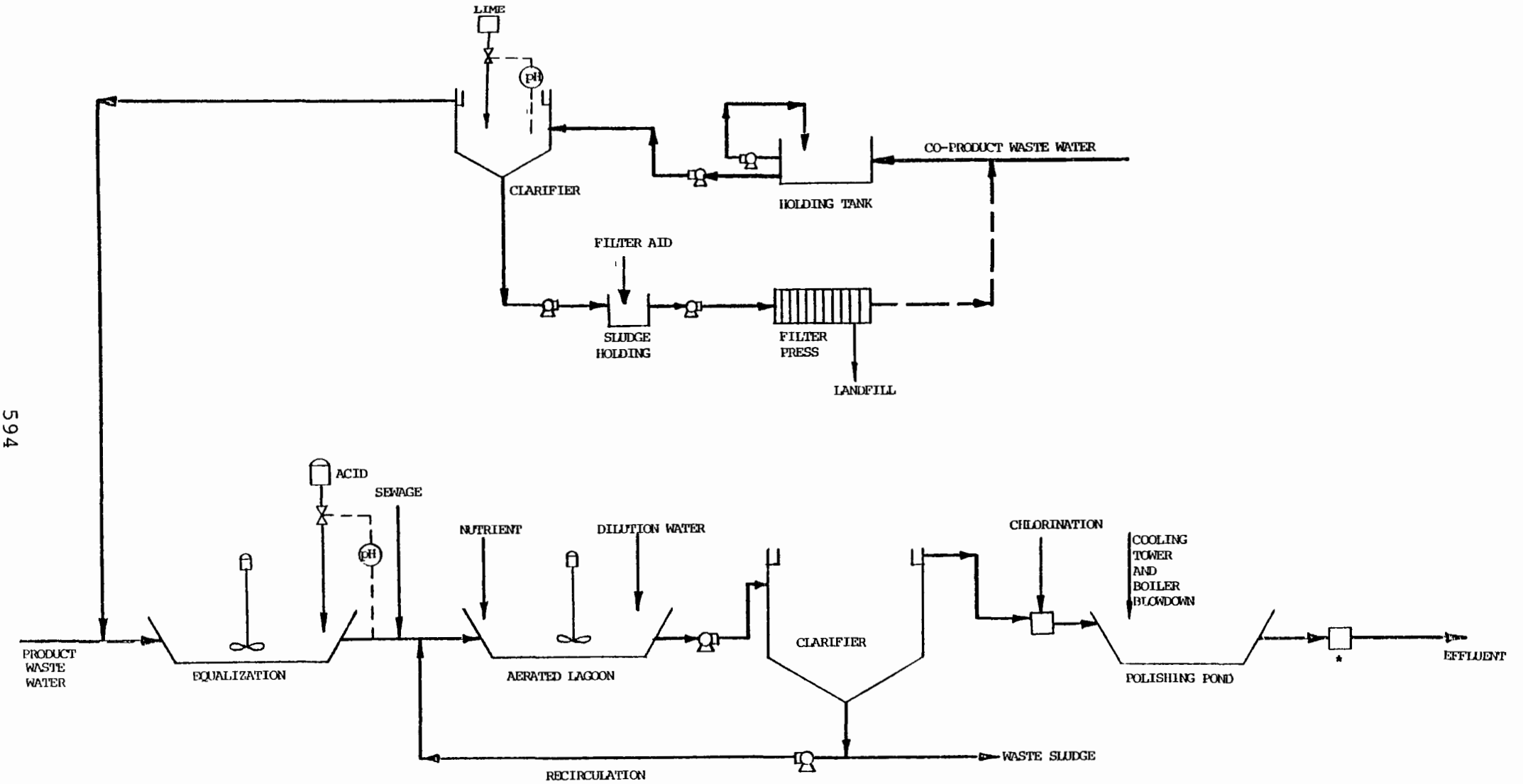

* Includes flow monitoring, pH monitoring and sampler.

Figure 25-4. Waste water treatment Level 2 for sodium hydrosulfite.

Monitoring requirements - Internal monitoring should include simple field tests for pH, chlorine residual and settleable solids. Maintenance of the co-product stream clarifier at a pH of 10.5 is expected to provide control of heavy metals without need for routine metal analyses, but effluent samples should be analyzed for chromium, zinc, copper, nickel and lead by atomic absorption for offical reporting purposes, in addition to periodic COD tests for general evaluation of the treatment.

25.2.2 Estimated Performance of BPT Systems

Raw waste loads found at Plant #672 were presented above. The organic priority pollutants found were phenol and pentachlorophenol. Priority pollutants which might require regulation are chromium and zinc. Waste water treatment at Plant #672 consists of equalization, aeration in a biological oxidation pond, clarification, chlorination and settling prior to discharge. Table 25-6 presents the results of sampling treatment influent and effluent. At the time of sampling, coproduct waste was not being treated.

BPT technology has been specified as the technology presently in use at Plant #672. Design and cost estimates are based on inclusion of coproduct wastes.

Base Level Performance Characteristics for BPT Pollutant Removal

Table 25-7 presents effluent quality achievable through the implementation of BPT technology.

Base Level Performance Characteristics for Priority Pollutant Removal

Priority pollutants, both metals and organics, are being reduced to acceptable levels with the present BPT system. Reduction of metals is assumed to be coincidental; the metals are perhaps precipitating as carbonates. No estimate can be made of the achievable effluent quality for metals, when an additional load of metal-bearing waste water is discharged from the coproduct pond.

Pretreatment Applications

No formate process sodium hydrosulfite plant presently discharges to a POTW. BPT technology would be applicable however, should such a discharge occur in the future.

TABLE 25-6. SCREENING RESULTS FROM SODIUM HYDROSULFITE PLANT #672

Pollutant	Raw Waste Influent		Treated Effluent	
	mg/l	kg/kkg	mg/l	kg/kkg
Flow (m^3/kkg)	1.87		4.68*	
Chemical Oxygen Demand, COD	15,500	29.0	740	3.46
Total Suspended Solids, TSS	840	1.58	25	0.12
Zinc, Zn	5.8	0.011	0.12	0.00057
Chromium, Cr	7.4	0.014	<0.043	<0.0002
Copper, Cu	1.0	0.0019	0.028	0.00013
Lead, Pb	0.83	0.0015	0.07	0.00013
Nickel, Ni	1.4	0.0027	0.16	0.00075
Cadmium,Cd	0.037	0.000069	0.029	0.00014
Phenol	0.15	0.0003	<0.01	<0.00005
Pentachlorophenol	0.37	0.0007	<0.01	<0.00005

* Higher flow due to the addition of sanitary wastes and dilution water to the aeration basin, plus cooling tower and boiler blowdown to the chlorine contact tank.

TABLE 25-7 CONTROL PARAMETER LIMITATIONS
SUBCATEGORY: Sodium Hydrosulfite
Level of Treatment: 1
Waste Water Flow: 4.7 m3/kkg

Pollutant	Subcategory Performance (mg/l)	(1) VFR	Quality Limit (mg/l)		Emission Limit (kg/kkg)	
			30 day Aver	24 hr Max	30 day Aver	24 hr Max
BPT Pollutants:						
Total Suspended Solids, TSS	25(2)	2.0	37.5	75	0.18	0.36
Chemical Oxygen Demand, COD	740(2)	2.0	1000	2000	4.7	9.4

(1) - VFR: ratio of the 24 hour variability factor to the 30 day variability factor.

(2) - Verification sampling

25.2.3 Estimated Performance of Advanced Level Systems

Advanced Level Performance Estimates for BPT and Priority Pollutant Removal

No improvement in effluent quality with regard to conventional pollutants is expected with this advanced technology. But effluent quality in terms of priority metals will be controlled to the levels indicated in Table 25-8.

New Source Applications

The advanced control and treatment technology is recommended for new formate process sodium hydrosulfite facilities as NSPS. However, BPT technology would be applicable when a market is available for the coproduct stream.

25.2.4 Cost Estimates

Discussion

The cost estimate of one model plant having two levels of treatment and the same level of production at both the levels is presented in Table 25-9. Table 25-10 gives a summary of the unit cost distribution between amortization operation and maintenance cost components at two levels of treatment.

Summary

Cost estimates developed for the first and the second levels of treatment indicate that labor and supervision costs constitute a major portion of the annual cost. This reflects the manpower requirements for operating the treatment systems on a 24-hour basis.

TABLE 25-8 CONTROL PARAMETER LIMITATIONS
SUBCATEGORY: Sodium Hydrosulfite
Level of Treatment: 2
Waste Water Flow: 4.7 m3/kkg

Pollutant	Performance (mg/l)	VFR (1)	Quality Limit (mg/l)		Emission Limit (kg/kkg)	
			30 day Aver	24 hr Max	30 day Aver	24 hr Max
BPT Pollutants:						
Total Suspended Solids, TSS	25	3.0	37.5	112	0.18	0.53
Chemical Oxygen Demand, COD	1000	2.0	1000	2000	4.7	9.4
Proposed Priority Pollutants						
Zinc, Zn	0.5	2.0	0.5	1.0	0.0024	0.0047
Chromium, Cr	0.1	2.0	0.1	0.2	0.0005	0.0009

(1) - VFR: ratio of the 24 hour variability factor to the 30 day variability factor.

TABLE 25-9. MODEL PLANT TREATMENT COSTS

Subcategory SODIUM HYDROSULFITE Formate Process Type of Regulation BAT

Production 20,450 metric tons per year (22,546 tons per year)
58 metric tons per day (64 tons per day)
Waste water flow 273 cubic meters per day.

	LEVEL OF TREATMENT*	
	FIRST	SECOND
A. INVESTMENT COST		
Construction	$51,000	$11,500
Equipment in place, including piping, fittings, electrical work and controls.....	113,000	110,200
Monitoring equipment in place.....	9,000	
Engineering design and inspection.....	34,600	24,340
Incidentals, overhead, fees, contingencies...	34,600	24,340
Land.....	12,000	2,400
TOTAL INVESTMENT COST	$254,200	$172,780
B. OPERATION AND MAINTENANCE COST		
Labor and supervision.	$168,000	$84,000
Energy.....	12,000	1,200
Chemicals.....	3,500	18,500
Maintenance.....	24,220	17,038
Taxes and insurance...	7,626	5,183
Residual waste disposal.....		2,500
Monitoring, analysis and reporting.....	15,000	7,500
TOTAL OPERATION AND MAINTENANCE COST	$230,346	$135,921
C. AMORTIZATION OF INVESTMENT COST	$39,405	$27,720
TOTAL ANNUAL COST	$269,751	$163,641

*First level represents the base cost of treatment system.
Other levels represent the incremental cost above base cost.

TABLE 25-10 MODEL PLANT TREATMENT COSTS

Subcategory SODIUM HYDROSULFITE Formate Process Type of Regulation BAT

	PRODUCTION (kkg/yr)	FLOW (m3/day)	Annual Treatment Costs ($/kkg) LEVEL OF TREATMENT FIRST $	SECOND $	THIRD $	FOURTH $
Annual Operation and Maintenance	20,450	273	11.26	6.65	Not Applicable	
Annual Amortization	20,450	273	1.93	1.36		
Total Cost	20,450	273	13.19	8.00		

SECTION 26

HYDROCHLORIC ACID INDUSTRY

26.1 ASSESSMENT OF THE WATER POLLUTION POTENTIAL

26.1.1 Industry Profile and Analytical Results

Most of the hydrochloric acid is produced as a by-product in the manufacture of chlorinated organic compounds. It is used in oil well activation, pickling of steel, metal cleaning, in monosodium glutamate manufacture and starch hydrolysis. It is also used as an acid reagent in several chemical manufacturing processes.

The industry profile data for this subcategory are given in Table 26-1, while existing regulations are summarized in Table 26-2.

Priority pollutants found in the raw waste during screening at Hydrochloric Acid Plant #014 were as follows:

Pollutant	Maximum Concentration Observed ug/l
Lead	3.5
Mercury	2
Nickel	5.5

On the basis of these findings, this subcategory has been recommended as an exclusion candidate under Paragraph 8.

TABLE 26-1 - SUBCATEGORY PROFILE DATA SUMMARY

SUBCATEGORY	HYDROCHLORIC ACID
Total subcategory capacity rate	
Total subcategory production rate	2,270,000 kkg/year
Number of plants in this subcategory	83
308 Data on file for	20
With total capacity of	755,000 kkg/year
With total production of	567,000 kkg/year
Representing capacity	
Representing production	25 percent
Plant production range:	
Minimum	
Maximum	
Average production	
Median production	
Average capacity utilization	
Plant age range:	4 years
Minimum	49 years
Maximum	
Wastewater flow range:	
Minimum	
Maximum	
Volume per unit product:	
Minimum	
Maximum	

Sources of data are Stanford Research Institute, Directory of Chemical Producers, U.S.A., 1977, U.S. Department of Commerce, Current Industrial Reports, December 1977; Energy and Environmental Analysis, Inc.; Draft Report, "Preliminary Economic Assessment of Effluent Limitations in the Inorganic Chemical Industry."

TABLE 26-2 - EXISTING REGULATIONS - EFFLUENT LIMITATION GUIDELINES

SUBCATEGORY Hydrochloric Acid

SUBPART G (40CFR 415.70, 5/22/75)

		STANDARDS					
		BPCTCA*		BATEA*		NSPS*	
Product Process	Parameters	Max.[1] kg/kkg (mg/l)	Avg.[2] k/kkg (mg/l)	Max. k/kkg (mg/l)	Avg. k/kkg (mg/l)	Max. k/kkg (mg/l)	Avg. k/kkg (mg/l)
Hydrochloric Acid		No discharge of pwwp[3]		No discharge of pwwp		No discharge of pwwp	

*Sections 415.72, 415.73, and 415.75 were remanded and are presently reserved (41 FR 51601, November 23, 1976).

[1]Max. = Maximum of any one day.

[2]Avg. = Average of daily values for thirty consecutive days shall not exceed.

[3]pwwp = Process wastewater pollutants.

SECTION 27

NITRIC ACID INDUSTRY

27.1 ASSESSMENT OF THE WATER POLLUTION POTENTIAL

27.1.1 Industry Profile and Analytical Results

Most of the nitric acid produced is used in the manufacture of ammonium nitrate and other nitrogen fertilizers. On site captive use is extensively practiced. It is also used in the manufacture of explosives, plastics and other organic products. Other uses are as an acidic and pickling agent.

The industry profile data for this subcategory are given in Table 27-1, while existing regulations are summarized in Table 27-2.

Priority pollutants found in raw wastes during sampling were as follows:

Pollutant	Maximum Concentration Observed ug/l Screening (2 Plants)	Verification (1 Plant)
Chromium	110	100
Zinc	120	791
Lead	29	<10
Mercury	.47	4.5
Silver	.5	<15
2-4 Dinitrophenol	215	Not analysed
Nickel	170	85
Cyanide	<.04	<.02

The 2-4 Dinitrophenol is presumed to be from comtamination by the organic products manufactured at the plant, and not process related. The chromium and zinc are due to cooling water conditioners present in the blowdown which is mixed with process streams.

It has been recommended that this subcategory be included in the fertilizer industry guidelines.

TABLE 27-1 - SUBCATEGORY PROFILE DATA SUMMARY

SUBCATEGORY	NITRIC ACID
Total subcategory capacity rate	9,177,000 kkg/year
Total subcategory production rate	7,171,000 kkg/year
Number of plants in this subcategory	87
308 Data on file for	11
With total capacity of	1,106,000 kkg/year
With total production of	774,400 kkg/year
Representing capacity	12 percent
Representing production	11 percent
Plant production range:	
Minimum	
Maximum	
Average production	
Median production	
Average capacity utilization	
Plant age range:	
Minimum	4 years
Maximum	83 years
Wastewater flow range:	
Minimum	
Maximum	
Volume per unit product:	
Minimum	
Maximum	

Sources of data are Stanford Research Institute, Directory of Chemical Producers, U.S.A., 1977, U.S. Department of Commerce, Current Industrial Reports, December 1977; Energy and Environmental Analysis, Inc.; Draft Report, "Preliminary Economic Assessment of Effluent Limitations in the Inorganic Chemical Industry."

TABLE 27-2 - EXISTING REGULATIONS - EFFLUENT LIMITATION GUIDELINES

SUBCATEGORY Nitric Acid

SUBPART J (40CFR 415.100, 3/12/74)

		STANDARDS					
		BPCTCA*		BATEA*		NSPS*	
Product Process	Parameters	Max.[1] kg/kkg (mg/l)	Avg.[2] k/kkg (mg/l)	Max. k/kkg (mg/l)	Avg. k/kkg (mg/l)	Max. k/kkg (mg/l)	Avg. k/kkg (mg/l)
Nitric Acid		No discharge of pwwp[3]		No discharge of pwwp		No discharge of pwwp	

*Sections 415.102, 415.103, and 415.105 were remanded and are presently reserved (41 FR 51601, November 23, 1976).

[1]Max. = Maximum of any one day.

[2]Avg. = Average of daily values for thirty consecutive days shall not exceed.

[3]pwwp = Process wastewater pollutants.

SECTION 28

SODIUM CARBONATE INDUSTRY (SOLVAY PROCESS)

28.1 ASSESSMENT OF THE WATER POLLUTION POTENTIAL

28.1.1 Industry Profile and Analytical Results

On-site captive production of sodium carbonate (soda ash) is a dominant practice. Sodium carbonate is used in the manufacture of sodium bicarbonate, ammonium chloride and calcium chloride.

The industry profile data are given in Table 28-1, while existing regulations are summarized in Table 28-2.

Priority pollutants found in significant concentrations in the raw waste during screening of Sodium Carbonate Plant #261 were:

Pollutant	Concentration ug/l
Antimony	430
Beryllium	220
Lead	2700
Thallium	200
Zinc	750
Silver	<57

Plant #261 is the only plant that is operating using this process. It does not appear likely that more plants of this type will be constructed since there is a lower cost, cleaner process available. The sources of priority pollutants, particularly lead, is under investigation. Because of the nature of this industry, it has been recommended that this subcategory be further studied under Phase II.

TABLE 28-1 - SUBCATEGORY PROFILE DATA SUMMARY

SUBCATEGORY	SODIUM CARBONATE
Total subcategory capacity rate	8,650,000 kkg/year
Total subcategory production rate	
Number of plants in this subcategory	10
308 Data on file for	8
With total capacity of	3,629,000 kkg/year
With total production of	2,828,000 kkg/year
Representing capacity	42 percent
Representing production	
Plant production range:	
Minimum	
Maximum	
Average production	
Median production	
Average capacity utilization	
Plant age range:	
Minimum	10 years
Maximum	95 years
Wastewater flow range:	
Minimum	
Maximum	
Volume per unit product:	
Minimum	
Maximum	

Sources of data are Stanford Research Institute, Directory of Chemical Producers, U.S.A., 1977, U.S. Department of Commerce, Current Industrial Reports, December 1977; Energy and Environmental Analysis, Inc.; Draft Report, "Preliminary Economic Assessment of Effluent Limitations in the Inorganic Chemical Industry."

TABLE 28-2 - EXISTING REGULATIONS - EFFLUENT LIMITATION GUIDELINES

SUBCATEGORY Sodium Carbonate

SUBPART O (40CFR 415.150, 3/12/74)

		STANDARDS					
		BPCTCA *		BATEA*		NSPS*	
Product Process	Para-meters	Max.[1] kg/kkg (mg/l)	Avg.[2] k/kkg (mg/l)	Max. k/kkg (mg/l)	Avg. k/kkg (mg/l)	Max. k/kkg (mg/l)	Avg. k/kkg (mg/l)
Sodium Carbonate	TSS	0.20 (222.2)**	0.10 (111.1)	0.34	0.17	No discharge of pwwp[3]	

*Sections 415.152, 415.153, and 415.155 were remanded and are presently reserved (41 FR 51601, November 23, 1976).

[1]Max. = Maximum of any one day.

[2]Avg. = Average of daily values for thirty consecutive days shall not exceed.

[3]pwwp = Process wastewater pollutants.

**flow basis 900 l/kkg.

SECTION 29

SODIUM METAL INDUSTRY

29.1 ASSESSMENT OF THE WATER POLLUTION POTENTIAL

29.1.1 Industry Profile and Analytical Results

Sodium metal is manufactured with chlorine by electrolysis of fused salt. It is used in the production of tetraethyl lead gasoline additives, sodium cyanide, sodium peroxide, and titanium and zirconium metals. In liquid form, it is used as a nuclear reactor coolant; it is also used as a light, thermally conductive solid in various applications.

The industry profile for this subcategory is given in Table 29-1, while existing regulations are summarized in Table 29-2.

No priority pollutants were found at significant concentrations during screening of Sodium Metal Plant #339. On the basis of these findings, this subcategory has been recommended as an exclusion candidate under Paragraph 8.

TABLE 29-1 - SUBCATEGORY PROFILE DATA SUMMARY

SUBCATEGORY	SODIUM METAL
Total subcategory capacity rate	
Total subcategory production rate	
Number of plants in this subcategory	5
308 Data on file for	2
With total capacity of	332,000 kkg/year
With total production of	300,000 kkg/year
Representing capacity	88 percent
Representing production	
Plant production range:	
Minimum	
Maximum	
Average production	
Median production	
Average capacity utilization	
Plant age range:	
Minimum	
Maximum	
Wastewater flow range:	
Minimum	
Maximum	
Volume per unit product:	
Minimum	
Maximum	

Sources of data are Stanford Research Institute, Directory of Chemical Producers, U.S.A., 1977, U.S. Department of Commerce, Current Industrial Reports, December 1977; Energy and Environmental Analysis, Inc.; Draft Report, "Preliminary Economic Assessment of Effluent Limitations in the Inorganic Chemical Industry."

TABLE 29-2 - EXISTING REGULATIONS - EFFLUENT LIMITATION GUIDELINES

SUBCATEGORY Sodium Metal

SUBPART R (40CFR 415.180, 3/12/74)

		STANDARDS					
		BPCTCA *		BATEA*		NSPS*	
Product Process	Para-meters	Max.[1] kg/kkg (mg/l)	Avg.[2] k/kkg (mg/l)	Max. k/kkg (mg/l)	Avg. k/kkg (mg/l)	Max. k/kkg (mg/l)	Avg. k/kkg (mg/l)
Sodium Metal	TSS	0.46	0.23	No discharge of pwwp[3]		No discharge of pwwp	

*Sections 415.182, 415.183, and 415.185 were remanded and are presently reserved (41 FR 51601, November 23, 1976).

[1]Max. = Maximum of any one day.

[2]Avg. = Average of daily values for thirty consecutive days shall not exceed.

[3]pwwp = Process wastewater pollutants.

SECTION 30

SODIUM SILICATE INDUSTRY

30.1 ASSESSMENT OF THE WATER POLLUTION POTENTIAL

30.1.1 Industry Profile and Analytical Results

Sodium silicate is manufactured both in liquid and anhydrous powdered form. It has many industrial uses, such as additives in adhesives, flocculants, and cleaning agents. It is also used in the production of soap and household detergents.

The industry profile for this subcategory is given in Table 30-1, while existing regulations are summarized in Table 30-2.

Priority pollutants of significance found in the effluent during screening at Sodium Silicate Plant #807 were as follows:

Pollutant	Concentration (ug/l)
Nickel	121
Silver	1.3
Mercury	1.3

Due to the low waste loads generated by this industry, this subcategory has been recommended as an exclusion candidate under Paragraph 8.

TABLE 30-1 - SUBCATEGORY PROFILE DATA SUMMARY

SUBCATEGORY	SODIUM SILICATE
Total subcategory capacity rate	814,000 kkg/year
Total subcategory production rate	679,000 kkg/year
Number of plants in this subcategory	30
308 Data on file for	7
With total capacity of	300,700 kkg/year
With total production of	254,900 kkg/year
Representing capacity	37 percent
Representing production	37 percent
Plant production range:	
Minimum	12,400 kkg/year
Maximum	57,300 kkg/year
Average production	
Median production	
Average capacity utilization	
Plant age range:	
Minimum	7 years
Maximum	43 years
Wastewater flow range:	
Minimum	
Maximum	
Volume per unit product:	
Minimum	
Maximum	

Sources of data are Stanford Research Institute, Directory of Chemical Producers, U.S.A., 1977, U.S. Department of Commerce, Current Industrial Reports, December 1977; Energy and Environmental Analysis, Inc.; Draft Report, "Preliminary Economic Assessment of Effluent Limitations in the Inorganic Chemical Industry."

TABLE 30-2 - EXISTING REGULATIONS - EFFLUENT LIMITATION GUIDELINES

SUBCATEGORY Sodium Silicate

SUBPART S (40CFR 415.190, 3/12/74)

		STANDARDS					
		BPCTCA*		BATEA *		NSPS *	
Product Process	Para-meters	Max.[1] kg/kkg (mg/l)	Avg.[2] k/kkg (mg/l)	Max. k/kkg (mg/l)	Avg. k/kkg (mg/l)	Max. k/kkg (mg/l)	Avg. k/kkg (mg/l)
Sodium Silicate	TSS	0.01	0.005	No discharge of pwwp[3]		No discharge of pwwp	

*Sections 415.192, 415.193, and 415.195 were remanded and are presently reserved (41 FR 51601, November 23, 1976).

[1]Max. = Maximum of any one day.

[2]Avg. = Average of daily values for thirty consecutive days shall not exceed.

[3]pwwp = Process wastewater pollutants.

SECTION 31

SULFURIC ACID INDUSTRY

31.1 ASSESSMENT OF THE WATER POLLUTION POTENTIAL

31.1.1 Industry Profile and Analytical Results

Sulfuric acid is one of the most extensively used of all manufactured chemicals. The major industrial use is in the fertilizer industry, with on-site captive use of the product as a dominant practice. It is also used in the manufacturing of plastics, explosives, detergents, hydrofluoric acid, nuclear fuel and several other organic and inorganic products.

The industry profile data for this subcategory are given in Table 31-1, while existing regulations are summarized in Table 31-2.

No priority pollutants were found at significant concentrations in the raw waste during screening of Sulfuric Acid Plant #363. On the basis of these findings, this subcategory has been recommended as an exclusion candidate under Paragraph 8.

TABLE 31-1 - SUBCATEGORY PROFILE DATA SUMMARY

SUBCATEGORY	SULFURIC ACID
Total subcategory capacity rate	42,144,000 kkg/year
Total subcategory production rate	30,464,000 kkg/year
Number of plants in this subcategory	151
308 Data on file for	47
With total capacity of	8,800,000 kkg/year
With total production of	6,300,000 kkg/year
Representing capacity	21 percent
Representing production	21 percent
Plant production range:	
Minimum	5,300 kkg/year
Maximum	47,700 kkg/year
Average production	
Median production	
Average capacity utilization	
Plant age range:	
Minimum	3 years
Maximum	78 years
Wastewater flow range:	
Minimum	
Maximum	
Volume per unit product:	
Minimum	
Maximum	

Sources of data are Stanford Research Institute, Directory of Chemical Producers, U.S.A., 1977, U.S. Department of Commerce, Current Industrial Reports, December 1977; Energy and Environmental Analysis, Inc.; Draft Report, "Preliminary Economic Assessment of Effluent Limitations in the Inorganic Chemical Industry."

TABLE 31-2 - EXISTING REGULATIONS - EFFLUENT LIMITATION GUIDELINES

SUBCATEGORY Sulfuric Acid

SUBPART U (40CFR 415.210, 3/12/74)

		STANDARDS					
		BPCTCA*		BATEA*		NSPS*	
Product Process	Parameters	Max.[1] kg/kkg (mg/l)	Avg.[2] k/kkg (mg/l)	Max. k/kkg (mg/l)	Avg. k/kkg (mg/l)	Max. k/kkg (mg/l)	Avg. k/kkg (mg/l)
Sulfuric Acid		No discharge of pwwp[3]		No discharge of pwwp		No discharge of pwwp	

*Sections 415.210, 415.212, 415.213, and 415.215 were remanded are are presently reserved (41 FR 51601, November 23, 1976).

[1]Max. = Maximum of any one day.

[2]Avg. = Average of daily values for thirty consecutive days shall not exceed.

[3]pwwp = Process wastewater pollutants.

SECTION 32

AMMONIUM CHLORIDE INDUSTRY

32.1 ASSESSMENT OF THE WATER POLLUTION POTENTIAL

32.1.1 Industry Profile and Analytical Results

Most ammonium chloride is produced as a by-product in the manufacturing of sodium carbonate (soda ash) by the Solvay process. It is used in the manufacture of dry cell batteries, explosives, dyes, used as a washing powder, as a soldering flux, as a chemical reagent, and as a medicinal additive to livestock feed. It is also used in pharmaceutical preparations and freezing mixtures.

The industry profile for this subcategory is given in Table 32-1, while existing regulations are summarized in Table 32-2.

No priority pollutants were found at significant concentrations in the waste during screening of Ammonium Chloride Plant #736. Ammonium was found to be the only pollutant of significance. Since ammonia is not a priority pollutant, this subcategory has been recommended as an exclusion candidate under Paragraph 8.

TABLE 32-1 - SUBCATEGORY PROFILE DATA SUMMARY

SUBCATEGORY	AMMONIUM CHLORIDE
Total subcategory capacity rate	
Total subcategory production rate	
Number of plants in this subcategory	6
308 Data on file for	3
With total capacity of	52,400 kkg/year
With total production of	29,800 kkg/year
Representing capacity	
Representing production	
Plant production range:	
Minimum	4,600 kkg/year
Maximum	13,400 kkg/year
Average production	
Median production	
Average capacity utilization	
Plant age range:	
Minimum	17 years
Maximum	43 years
Wastewater flow range:	
Minimum	
Maximum	
Volume per unit product:	
Minimum	
Maximum	

Sources of data are Stanford Research Institute, Directory of Chemical Producers, U.S.A., 1977, U.S. Department of Commerce, Current Industrial Reports, December 1977; Energy and Environmental Analysis, Inc.; Draft Report, "Preliminary Economic Assessment of Effluent Limitations in the Inorganic Chemical Industry."

TABLE 32-2 - EXISTING REGULATIONS - EFFLUENT LIMITATION GUIDELINES

SUBCATEGORY Ammonium Chloride

SUBPART X (40CFR 415.240, 5/22/75)

		STANDARDS					
		BPCTCA		BATEA		NSPS	
Product Process	Parameters	Max.[1] kg/kkg (mg/l)	Avg.[2] k/kkg (mg/l)	Max. k/kkg (mg/l)	Avg. k/kkg (mg/l)	Max. k/kkg (mg/l)	Avg. k/kkg (mg/l)
Ammonium Chloride (Anhydrous)	NH_3-N	No discharge of pwwp[3]		No discharge of pwwp		No discharge of pwwp	
Solvay By-Product	NH_3-N	8.8	4.4				

[1]Max. = Maximum of any one day.

[2]Avg. = Average of daily values for thirty consecutive days shall not exceed.

[3]pwwp = Process wastewater pollutants.

SECTION 33

AMMONIUM HYDROXIDE INDUSTRY

33.1 ASSESSMENT OF THE WATER POLLUTION POTENTIAL

33.1.1 Industry Profile and Analytical Results

Ammonium hydroxide is predominately used as a chemical intermediary and reagent. It is also used in the dyeing and bleaching of fabrics, the production of ammonium salts and aniline dyes, and the extraction of alkaloids from plants.

The industry profile for this subcategory is given in Table 33-1, while existing regulations are summarized in Table 33-2.

No plants in this subcategory were found that had a discharge. Therefore, this industry has been recommended as a Paragraph 8 exclusion candidate.

TABLE 33-1 - SUBCATEGORY PROFILE DATA SUMMARY

SUBCATEGORY	AMMONIUM HYDROXIDE
Total subcategory capacity rate	
Total subcategory production rate	
Number of plants in this subcategory	6
308 Data on file for	
With total capacity of	41,800 kkg/year
With total production of	17,000 kkg/year
Representing capacity	
Representing production	
Plant production range:	
Minimum	206 kkg/year
Maximum	9,500 kkg/year
Average production	
Median production	
Average capacity utilization	
Plant age range:	
Minimum	10 years
Maximum	26 years
Wastewater flow range:	
Minimum	
Maximum	
Volume per unit product:	
Minimum	
Maximum	

Sources of data are Stanford Research Institute, Directory of Chemical Producers, U.S.A., 1977, U.S. Department of Commerce, Current Industrial Reports, December 1977; Energy and Environmental Analysis, Inc.; Draft Report, "Preliminary Economic Assessment of Effluent Limitations in the Inorganic Chemical Industry."

TABLE 33-2 - EXISTING REGULATIONS - EFFLUENT LIMITATION GUIDELINES

SUBCATEGORY Ammonium Hydroxide

SUBPART Y (40CFR 415.250, 5/22/75)

		STANDARDS					
		BPCTCA		BATEA		NSPS	
Product Process	Para-meters	Max.[1] kg/kkg (mg/l)	Avg.[2] k/kkg (mg/l)	Max. k/kkg (mg/l)	Avg. k/kkg (mg/l)	Max. k/kkg (mg/l)	Avg. k/kkg (mg/l)
Ammonium Hydroxide	Reserved	Reserved		Reserved		Reserved	

[1]Max. = Maximum of any one day.

[2]Avg. = Average of daily values for thirty consecutive days shall not exceed.

SECTION 34

BARIUM CARBONATE INDUSTRY

34.1 ASSESSMENT OF THE WATER POLLUTION POTENTIAL

34.1.1 Industry Profile and Analytical Results

Barium carbonate is used in glass manufacturing, as a flux in ceramics and enamelling, as an intermediate in the production of barium oxide and hydroxide and as a coating for photographic paper. It is also used in the synthetic dyestuff industry and for the removal of soluble sulfate in brick manufacturing.

The industry profile for this subcategory is given in Table 34-1, while existing regulations are summarized in Table 34-2.

No priority pollutants were found at significant levels in the waste during screening of Barium Carbonate Plant #360. On the basis of these findings, this subcategory has been recommended as an exclusion candidate under Paragraph 8.

TABLE 34-1 - SUBCATEGORY PROFILE DATA SUMMARY

SUBCATEGORY	BARIUM CARBONATE
Total subcategory capacity rate	
Total subcategory production rate	
Number of plants in this subcategory	7
308 Data on file for	5
With total capacity of	57,000 kkg/year
With total production of	48,745 kkg/year
Representing capacity	
Representing production	
Plant production range:	
Minimum	158 kkg/year
Maximum	26,190 kkg/year
Average production	
Median production	
Average capacity utilization	
Plant age range:	
Minimum	9 years
Maximum	24 years
Wastewater flow range:	
Minimum	
Maximum	
Volume per unit product:	
Minimum	
Maximum	

Sources of data are Stanford Research Institute, Directory of Chemical Producers, U.S.A., 1977, U.S. Department of Commerce, Current Industrial Reports, December 1977; Energy and Environmental Analysis, Inc.; Draft Report, "Preliminary Economic Assessment of Effluent Limitations in the Inorganic Chemical Industry."

TABLE 34-2 - EXISTING REGULATIONS - EFFLUENT LIMITATION GUIDELINES

SUBCATEGORY Barium Carbonate

SUBPART Z (40CFR 415.260, 5/22/75)

		STANDARDS					
		BPCTCA		BATEA		NSPS	
Product Process	Parameters	Max.[1] kg/kkg (mg/l)	Avg.[2] k/kkg (mg/l)	Max. k/kkg (mg/l)	Avg. k/kkg (mg/l)	Max. k/kkg (mg/l)	Avg. k/kkg (mg/l)
Barium Carbonate	Reserved	Reserved		Reserved		Reserved	

[1]Max. = Maximum of any one day.

[2]Avg. = Average of daily values for thirty consecutive days shall not exceed.

SECTION 35

BORIC ACID INDUSTRY

35.1 ASSESSMENT OF THE WATER POLLUTION POTENTIAL

35.1.1 Industry Profile and Analytical Results

Boric acid is used in the manufacture of chromic oxide, glazes, enamels, textile fiberglass, and heat resistant glass. It is also used medicinally as a mild antiseptic and in atomic power plants as a nuclear moderator.

The industry profile for this subcategory is given in Table 35-1 and the existing regulations are summarized in Table 35-2.

Priority pollutants found at signifcant concentrations during screening of Boric Acid Plant #778 were:

Pollutant	Concentration (ug/l)
Copper	340
Thallium	140
Zinc	1190
Bis(2-ethylhexyl) phthalate	530
Mercury	1.6

This subcategory has only three plants, and the total waste water discharge is not high. Because of the nature of this industry, it has been recommended that this subcategory be further studied under Phase II.

TABLE 35-1 - SUBCATEGORY PROFILE DATA SUMMARY

SUBCATEGORY	BORIC ACID
Total subcategory capacity rate	
Total subcategory production rate	122,600 kkg/year
Number of plants in this subcategory	3
308 Data on file for	2
With total capacity of	97,500 kkg/year
With total production of	93,850 kkg/year
Representing capacity	
Representing production	77 percent
Plant production range:	
Minimum	30,156 kkg/year
Maximum	63,694 kkg/year
Average production	
Median production	
Average capacity utilization	
Plant age range:	
Minimum	30 years
Maximum	83 years
Wastewater flow range:	
Minimum	
Maximum	
Volume per unit product:	
Minimum	
Maximum	

Sources of data are Stanford Research Institute, Directory of Chemical Producers, U.S.A., 1977, U.S. Department of Commerce, Current Industrial Reports, December 1977; Energy and Environmental Analysis, Inc.; Draft Report, "Preliminary Economic Assessment of Effluent Limitations in the Inorganic Chemical Industry."

TABLE 35-2 - EXISTING REGULATIONS - EFFLUENT LIMITATION GUIDELINES

SUBCATEGORY Boric Acid

SUBPART AB (40CFR 415.280, 5/22/75)

		STANDARDS					
		BPCTCA		BATEA		NSPS	
Product Process	Parameters	Max.[1] kg/kkg (mg/l)	Avg.[2] k/kkg (mg/l)	Max. k/kkg (mg/l)	Avg. k/kkg (mg/l)	Max. k/kkg (mg/l)	Avg. k/kkg (mg/l)
Boric Acid (Ore-mined)	AS	0.0028	0.0014				
	TSS	0.14	0.07				
(TRONA)	AS	No discharge		No discharge		No discharge	
	TSS	of pwwp[3]		of pwwp		of pwwp	

[1] Max. = Maximum of any one day.

[2] Avg. = Average of daily values for thirty consecutive days shall not exceed.

[3] pwwp = Process wastewater pollutants.

SECTION 36

CALCIUM CARBONATE INDUSTRY

36.1 ASSESSMENT OF THE WATER POLLUTION POTENTIAL

36.1.1 Industry Profile and Analytical Results

Calcium carbonate is manufactured both in pure and impure form and it is extensively used in many industries. In the pure form, it is used in the rubber, paint, cement, paper and pharmaceutical industries.

The industry profile for this subcategory is given in Table 36-1, while existing regulations are summarized in Table 36-2.

No priority pollutants were found at significant levels in the raw waste during screening of Calcium Carbonate Plant #883. On the basis of these findings, this subcategory has been recommended as an exclusion candidate under Paragraph 8.

TABLE 36-1 - SUBCATEGORY PROFILE DATA SUMMARY

SUBCATEGORY	CALCIUM CARBONATE
Total subcategory capacity rate	
Total subcategory production rate	129,600 kkg/year
Number of plants in this subcategory	
308 Data on file for	3
With total capacity of	81,300 kkg/year
With total production of	72,400 kkg/year
Representing capacity	
Representing production	56 percent
Plant production range:	
Minimum	555 kkg/year
Maximum	49,800 kkg/year
Average production	
Median production	
Average capacity utilization	
Plant age range:	
Minimum	25 years
Maximum	50 years
Wastewater flow range:	
Minimum	
Maximum	
Volume per unit product:	
Minimum	
Maximum	

Sources of data are Stanford Research Institute, Directory of Chemical Producers, U.S.A., 1977, U.S. Department of Commerce, Current Industrial Reports, December 1977; Energy and Environmental Analysis, Inc.; Draft Report, "Preliminary Economic Assessment of Effluent Limitations in the Inorganic Chemical Industry."

TABLE 36-2 - EXISTING REGULATIONS - EFFLUENT LIMITATION GUIDELINES

SUBCATEGORY Calcium Carbonate

SUBPART AD (40CFR 415.310, 5/22/75)

		STANDARDS					
		BPCTCA		BATEA		NSPS	
Product Process	Para-meters	Max.[1] kg/kkg (mg/l)	Avg.[2] k/kkg (mg/l)	Max. k/kkg (mg/l)	Avg. k/kkg (mg/l)	Max. k/kkg (mg/l)	Avg. k/kkg (mg/l)
Calcium Carbonate (Milk of Lime)	TSS	0.56 (50.0)*	0.28 (25.0)				
Solvay Recovery	TSS	1.16 (49.6)	0.58 (24.8)				

[1]Max. = Maximum of any one day.

[2]Avg. = Average of daily values for thirty consecutive days shall not exceed.

*flow basis 11,200 l/kkg.

SECTION 37

CUPROUS OXIDE INDUSTRY

37.1 ASSESSMENT OF THE WATER POLLUTION POTENTIAL

37.1.1 Industry Profile and Analytical Results

Copper oxide is used in the manufacture of glass, ceramics, marine paints and photoelectric cells. It is also used in agriculture as a seed fungicide, and as an antiseptic and catalyst.

The industry profile for this subcategory is given in Table 37-1, while existing regulations are summarized in Table 37-2.

Only one plant was found to be producing this product at the time of screening. Because this is now a single plant industry, this subcategory has been recommended for exclusion under Paragraph 8.

TABLE 37-1 - SUBCATEGORY PROFILE DATA SUMMARY

SUBCATEGORY	CUPROUS OXIDE
Total subcategory capacity rate	Unknown
Total subcategory production rate	Unknown
Number of plants in this subcategory	No plants
308 Data on file for	Unknown
With total capacity of	
With total production of	
Representing capacity	
Representing production	
Plant production range:	
Minimum	
Maximum	
Average production	
Median production	
Average capacity utilization	
Plant age range:	
Minimum	
Maximum	
Wastewater flow range:	
Minimum	
Maximum	
Volume per unit product:	
Minimum	
Maximum	

Sources of data are Stanford Research Institute, Directory of Chemical Producers, U.S.A., 1977, U.S. Department of Commerce, Current Industrial Reports, December 1977; Energy and Environmental Analysis, Inc.; Draft Report, "Preliminary Economic Assessment of Effluent Limitations in the Inorganic Chemical Industry."

TABLE 37-2 - EXISTING REGULATIONS - EFFLUENT LIMITATION GUIDELINES

SUBCATEGORY Cuprous Oxide

SUBPART AK (40CFR 415.370, 5/22/75)

		STANDARDS					
		PBCTCA		BATEA		NSPS	
Product Process	Parameters	Max.[1] kg/kkg (mg/l)	Avg.[2] k/kkg (mg/l)	Max. k/kkg (mg/l)	Avg. k/kkg (mg/l)	Max. k/kkg (mg/l)	Avg. k/kkg (mg/l)
Cuprous Oxide	Reserved	Reserved		Reserved		Reserved	

[1]Max. = Maximum of any one day.

[2]Avg. = Average of daily values for thirty consecutive days shall not exceed.

SECTION 38

MANGANESE SULFATE INDUSTRY

38.1 ASSESSMENT OF THE WATER POLLUTION POTENTIAL

38.1.1 Industry Profile and Analytical Results

Manganese sulfate is normally sold as a mixture of tetra and penta hydrates. It is used in oils for the manufacture of varnishes, in dyeing and in the manufacture of porcelain. It is also used in the fertilizer industry.

The industry profile for this subcategory is given in Table 38-1, while existing regulations are summarized in Table 38-2.

Only one plant in this subcategory was found to be in production at the time of screening. Out of the eight plants contacted, four no longer produced it, two were fertilizer manufacturers and one manufactured reagent grade manganese sulfate. Because this is now a single plant industry, this subcategory has been recommended for exclusion under Paragraph 8.

TABLE 38-1 - SUBCATEGORY PROFILE DATA SUMMARY

SUBCATEGORY	MANGANESE SULFATE
Total subcategory capacity rate	Unknown
Total subcategory production rate	Unknown
Number of plants in this subcategory	No Plants
308 Data on file for	Unknown
With total capacity of	
With total production of	
Representing capacity	
Representing production	
Plant production range:	
Minimum	
Maximum	
Average production	
Median production	
Average capacity utilization	
Plant age range:	
Minimum	
Maximum	
Wastewater flow range:	
Minimum	
Maximum	
Volume per unit product:	
Minimum	
Maximum	

Sources of data are Stanford Research Institute, Directory of Chemical Producers, U.S.A., 1977, U.S. Department of Commerce, Current Industrial Reports, December 1977; Energy and Environmental Analysis, Inc.; Draft Report, "Preliminary Economic Assessment of Effluent Limitations in the Inorganic Chemical Industry."

TABLE 38-2 - EXISTING REGULATIONS - EFFLUENT LIMITATION GUIDELINES

SUBCATEGORY Manganese Sulfate

SUBPART AT (40CFR 415.460, 5/22/75)

		STANDARDS					
		PBCTCA		BATEA		NSPS	
Product Process	Parameters	Max.[1] kg/kkg (mg/l)	Avg.[2] k/kkg (mg/l)	Max. k/kkg (mg/l)	Avg. k/kkg (mg/l)	Max. k/kkg (mg/l)	Avg. k/kkg (mg/l)
Manganese Sulfate	Reserved	Reserved		Reserved		Reserved	

[1]Max. = Maximum of any one day.

[2]Avg. = Average of daily values for thirty consecutive days shall not exceed.

SECTION 39

STRONG NITRIC ACID INDUSTRY

39.1 ASSESSMENT OF THE WATER POLLUTION POTENTIAL

39.1.1 Industry Profile and Analytical Results

Strong or concentrated nitric acid is used in the manufacture of organic compounds where nitric acid is required to act as an oxidizing agent rather than as an acid. It is also used in the manufacture of dye intermediates, and explosives.

The industry profile for this subcategory is given in Table 39-1, while existing regulations are summarized in Table 39-2.

Priority pollutants found in the waste streams during sampling of Strong Nitric Acid Plants were:

Pollutant	Maximum Concentration Observed (ug/l) Screening (2 Plants)	Verification (1 Plant)
Chromium	40,000	<50
Zinc	900	115
Lead	70	<10
Mercury	8.6	1.2
Silver	.69	<15
Nickel	<5	<50
Cadmium	<2	<2
Cyanide	.02	<.02

In a followup, it was found that the chromium and zinc are used as corrosion inhibitors in the cooling water, and are not process related. The other values are below significant levels.

Verification sampling at Plant #623 confirmed this.

On the basis of these findings, this subcategory has been recommended for exclusion under Paragraph 8.

TABLE 39-1 - SUBCATEGORY PROFILE DATA SUMMARY

SUBCATEGORY	STRONG NITRIC ACID
Total subcategory capacity rate	
Total subcategory production rate	
Number of plants in this subcategory	
308 Data on file for	5
With total capacity of	155,200 kkg/year
With total production of	121,000 kkg/year
Representing capacity	
Representing production	
Plant production range:	
Minimum	5,300 kkg/year
Maximum	60,200 kkg/year
Average production	
Median production	
Average capacity utilization	
Plant age range:	
Minimum	11 years
Maximum	49 years
Wastewater flow range:	
Minimum	
Maximum	
Volume per unit product:	
Minimum	
Maximum	

Sources of data are Stanford Research Institute, Directory of Chemical Producers, U.S.A., 1977, U.S. Department of Commerce, Current Industrial Reports, December 1977; Energy and Environmental Analysis, Inc.; Draft Report, "Preliminary Economic Assessment of Effluent Limitations in the Inorganic Chemical Industry."

TABLE 39-2 - EXISTING REGULATIONS - EFFLUENT LIMITATION GUIDELINES

SUBCATEGORY Strong Nitric Acid

SUBPART AV (40CFR 415.480, 5/22/75)

		STANDARDS					
		BPCTCA		BATEA		NSPS	
Product Process	Parameters	Max.[1] kg/kkg (mg/l)	Avg.[2] k/kkg (mg/l)	Max. k/kkg (mg/l)	Avg. k/kkg (mg/l)	Max. k/kkg (mg/l)	Avg. k/kkg (mg/l)
Strong Nitric Acid	Reserved	Reserved		Reserved		Reserved	

[1]Max. = Maximum of any one day.

[2]Avg. = Average of daily values for thirty consecutive days shall not exceed.

SECTION 40

OXYGEN AND NITROGEN INDUSTRY

40.1 ASSESSMENT OF THE WATER POLLUTION POTENTIAL

40.1.1 Industry Profile and Analytical Results

Oxygen, along with nitrogen, is produced from air by distillation of liquefied air. Oxygen is used in the production of steel, gas welding, medicine, jet fuel, sewage treatment plants and in the manufacture of ethylene and acetylene. In rocket propullsion, liquid oxygen is often used as a crygenic liquid oxidizer in the main stage boosters used for space exploration.

The largest use of nitrogen is in the manufacture of ammonia by the Haber process. It is also used in cryosurgery. As an inert gas, it is used to prevent oxidation by air. In the liquid form, it is used for low temperature refrigeration.

The industry profile for this subcategory is given in Table 40-1, while existing regulations are summarized in Table 40-2.

Only one priority pollutant was found at a significant level in the raw waste during screening of Oxyen and Nitrogen Plant #993.

Pollutant	Concentration (ug/l)
Copper	590

Due to the small quantity of waste water discharged by the industry and the resulting low waste load generated, this subcategory has been recommended as an exclusion candidate under Paragraph 8.

TABLE 40-1 - SUBCATEGORY PROFILE DATA SUMMARY

SUBCATEGORY	OXYGEN AND NITROGEN
Total subcategory capacity rate	31,174,000 kkg/year
Total subcategory production rate	
Number of plants in this subcategory	171
308 Data on file for	9
With total capacity of	1,588,000 kkg/year
With total production of	1,473,000 kkg/year
Representing capacity	5 percent
Representing production	
Plant production range:	
Minimum	2,400 kkg/year
Maximum	378,000 kkg/year
Average production	
Median production	
Average capacity utilization	
Plant age range:	
Minimum	4 years
Maximum	36 years
Wastewater flow range:	
Minimum	
Maximum	
Volume per unit product:	
Minimum	
Maximum	

Sources of data are Stanford Research Institute, Directory of Chemical Producers, U.S.A., 1977, U.S. Department of Commerce, Current Industrial Reports, December 1977; Energy and Environmental Analysis, Inc.; Draft Report, "Preliminary Economic Assessment of Effluent Limitations in the Inorganic Chemical Industry."

TABLE 40-2 - EXISTING REGULATIONS - EFFLUENT LIMITATION GUIDELINES

SUBCATEGORY Oxygen and Nitrogen

SUBPART AW (40CFR 415.490, 5/22/75)

		STANDARDS					
		BPCTCA		BATEA		NSPS	
Product Process	Parameters	Max.[1] kg/kkg (mg/l)	Avg.[2] k/kkg (mg/l)	Max. k/kkg (mg/l)	Avg. k/kkg (mg/l)	Max. k/kkg (mg/l)	Avg. k/kkg (mg/l)
Oxygen and Nitrogen	Oil and Grease	0.002 (51.3)*	0.001 (25.6)				

[1]Max. = Maximum of any one day.

[2]Avg. = Average of daily values for thirty consecutive days shall not exceed.

*flow basis 39 l/kkg.

SECTION 41

POTASSIUM IODIDE INDUSTRY

41.1 ASSESSMENT OF THE WATER POLLUTION POTENTIAL

41.1.1 Industry Profile and Analytical Results

Potassium iodide is used in photographic emulsions, in animal and poultry feeds, table salts and analytical chemistry. It also has a number of medical uses.

The industry profile for this subcategory is given in Table 41-1, while existing regulations are summarized in Table 41-2.

Priority pollutants found during screening of Potassium Iodide Plant #118 were:

Pollutant	Concentration (ug/l)
Copper	1900
Thallium	28
Zinc	930*
Silver	35

*The water supply was found to have 900 ug/l zinc and is presumed to be the source.

Due to the small quantity of waste water discharged by the industry, and resulting low waste loads generated, this subcategory has been recommended as an exclusion candidate under Paragraph 8.

TABLE 41-1 - SUBCATEGORY PROFILE DATA SUMMARY

SUBCATEGORY	POTASSIUM IODIDE
Total subcategory capacity rate	
Total subcategory production rate	122,560 kkg/year
Number of plants in this subcategory	9
308 Data on file for	4
With total capacity of	1,985 kkg/year
With total production of	1,300 kkg/year
Representing capacity	
Representing production	10 percent
Plant production range:	
Minimum	79 kkg/year
Maximum	634 kkg/year
Average production	
Median production	
Average capacity utilization	
Plant age range:	
Minimum	27 years
Maximum	42 years
Wastewater flow range:	
Minimum	
Maximum	
Volume per unit product:	
Minimum	
Maximum	

Sources of data are Stanford Research Institute, Directory of Chemical Producers, U.S.A., 1977, U.S. Department of Commerce, Current Industrial Reports, December 1977; Energy and Environmental Analysis, Inc.; Draft Report, "Preliminary Economic Assessment of Effluent Limitations in the Inorganic Chemical Industry."

TABLE 41-2 - EXISTING REGULATIONS - EFFLUENT LIMITATION GUIDELINES

SUBCATEGORY Potassium Iodide

SUBPART AY (40CFR 415.510, 5/22/75)

		STANDARDS					
		BPCTCA		BATEA		NSPS	
Product Process	Parameters	Max.[1] kg/kkg (mg/l)	Avg.[2] k/kkg (mg/l)	Max. k/kkg (mg/l)	Avg. k/kkg (mg/l)	Max. k/kkg (mg/l)	Avg. k/kkg (mg/l)
Potassium Iodide	TSS	0.09 (75.0)*	0.03 (25.0)				
	Sulfide	0.015 (12.5)	0.005 (4.2)				
	Iron	0.015 (12.5)	0.005 (4.2)				
	Barium	0.009 (7.5)	0.003 (2.5)				

[1]Max. = Maximum of any one day.

[2]Avg. = Average of daily values for thirty consecutive days shall not exceed.

*flow basis 1200 l/kkg.

SECTION 42

SODIUM HYDROSULFIDE INDUSTRY

42.1 ASSESSMENT OF THE WATER POLLUTION POTENTIAL

42.1.1 Industry Profile and Analytical Results

Sodium hydrosulfide is used in the manufacture of sodium sulfide and other chemicals and paper (Kraft). It is also used in dehairing of hides and industrial waste water treatment.

The industry profile for this subcategory is given in Table 42-1, while existing regulations are summarized in Table 42-2.

Priority pollutants found in the waste during screening of Sodium Hydrosulfide Plant #144 were:

Pollutant	Concentration (ug/l)
Phenol	76
Napthalene	90

Due to the very small flows and waste loads generated by this industry, this subcategroy has been recommended as a Paragraph 8 exclusion candidate.

TABLE 42-1 - SUBCATEGORY PROFILE DATA SUMMARY

SUBCATEGORY	SODIUM HYDROSULFIDE
Total subcategory capacity rate	
Total subcategory production rate	
Number of plants in this subcategory	12
308 Data on file for	3
With total capacity of	56,900 kkg/year
With total production of	44,700 kkg/year
Representing capacity	
Representing production	
Plant production range:	
Minimum	3,800 kkg/year
Maximum	36,500 kkg/year
Average production	
Median production	
Average capacity utilization	
Plant age range:	
Minimum	5 years
Maximum	14 years
Wastewater flow range:	
Minimum	
Maximum	
Volume per unit product:	
Minimum	
Maximum	

Sources of data are Stanford Research Institute, Directory of Chemical Producers, U.S.A., 1977, U.S. Department of Commerce, Current Industrial Reports, December 1977; Energy and Environmental Analysis, Inc.; Draft Report, "Preliminary Economic Assessment of Effluent Limitations in the Inorganic Chemical Industry."

TABLE 42-2 - EXISTING REGULATIONS - EFFLUENT LIMITATION GUIDELINES

SUBCATEGORY Sodium Hydrosulfide

SUBPART BD (40CFR 415.560, 5/22/75)

		STANDARDS					
		BPCTCA		BATEA		NSPS	
Product Process	Parameters	Max.[1] kg/kkg (mg/l)	Avg.[2] k/kkg (mg/l)	Max. k/kkg (mg/l)	Avg. k/kkg (mg/l)	Max. k/kkg (mg/l)	Avg. k/kkg (mg/l)
Sodium Hydro-Sulfide	Reserved	Reserved		Reserved		Reserved	

[1]Max. = Maximum of any one day.

[2]Avg. = Average of daily values for thirty consecutive days shall not exceed.

SECTION 43

SODIUM SILICOFLUORIDE INDUSTRY

43.1 ASSESSMENT OF THE WATER POLLUTION POTENTIAL

43.1.1 Industrial Profile and Analytical Results

Sodium Silicofluoride is used in the manufacture of sodium fluoride and in the light metal industry as a protective agent. It is also used as an insecticide, as a fluxing and opaquing agent for ceramics and in detergent products.

The industry profile for this subcategory is given in Table 43-1, while existing regulations are summarization in Table 43-2.

This subcategory was not included in the present study. Screening has been recommended under Phase II.

TABLE 43-1 - SUBCATEGORY PROFILE DATA SUMMARY

SUBCATEGORY	SODIUM SILICOFLUORIDE
Total subcategory capacity rate	
Total subcategory production rate	51,800 kkg/year
Number of plants in this subcategory	6
308 Data on file for	1
With total capacity of	7,460 kkg/year
With total production of	3,970 kkg/year
Representing capacity	
Representing production	7.5 percent
Plant production range:	
Minimum	
Maximum	
Average production	
Median production	
Average capacity utilization	
Plant age range:	
Minimum	
Maximum	
Wastewater flow range:	
Minimum	
Maximum	
Volume per unit product:	
Minimum	
Maximum	

Sources of data are Stanford Research Institute, Directory of Chemical Producers, U.S.A., 1977, U.S. Department of Commerce, Current Industrial Reports, December 1977; Energy and Environmental Analysis, Inc.; Draft Report, "Preliminary Economic Assessment of Effluent Limitations in the Inorganic Chemical Industry."

TABLE 43-2 - EXISTING REGULATIONS - EFFLUENT LIMITATION GUIDELINES

SUBCATEGORY Sodium Silicofluoride

SUBPART BF (40CFR 415.580, 5/22/75)

		STANDARDS					
		BPCTCA*		BATEA*		NSPS*	
Product Process	Parameters	Max.[1] kg/kkg (mg/l)	Avg.[2] k/kkg (mg/l)	Max. k/kkg (mg/l)	Avg. k/kkg (mg/l)	Max. k/kkg (mg/l)	Avg. k/kkg (mg/l)
Sodium Silico-fluoride	Fluoride	0.5 (40.0)**	0.25 (20.0)				
	TSS	0.6 (48.0)	0.3 (24.0)				

*Sections 415.580, 415.581, and 415.582 were revoked by the Agency and are presently reserved (41 FR 51601, November 23, 1976).

[1]Max. = Maximum of any one day.

[2]Avg. = Average of daily values for thirty consecutive days shall not exceed.

**flow basis 12,500 l/kkg.

SECTION 44

SODIUM THIOSULFATE INDUSTRY

44.1 ASSESSMENT OF THE WATER POLLUTION POTENTIAL

44.1.1 Industry Profile and Analytical Results

Sodium thiosulfate is extensively used in the development of negatives and prints in the photographic industry. It is also used in medicine, in the paper and dyeing industries and as a bleaching agent for natural products.

The industry profile data are given in Table 44-1, while existing regulations are summarized in Table 44-2.

No priority pollutants were found at significant levels in the raw waste during screening of Sodium Thiosulfate Plant #987.

On the basis of these findings, this subcategory has been recommended as an exclusion candidate under Paragraph 8.

TABLE 44-1 - SUBCATEGORY PROFILE DATA SUMMARY

SUBCATEGORY	SODIUM THIOSULFATE
Total subcategory capacity rate	
Total subcategory production rate	
Number of plants in this subcategory	6
308 Data on file for	5
With total capacity of	88,000 kkg/year
With total production of	70,300 kkg/year
Representing capacity	
Representing production	
Plant production range:	
Minimum	4,400 kkg/year
Maximum	27,000 kkg/year
Average production	
Median production	
Average capacity utilization	
Plant age range:	
Minimum	3 years
Maximum	51 years
Wastewater flow range:	
Minimum	
Maximum	
Volume per unit product:	
Minimum	
Maximum	

Sources of data are Stanford Research Institute, Directory of Chemical Producers, U.S.A., 1977, U.S. Department of Commerce, Current Industrial Reports, December 1977; Energy and Environmental Analysis, Inc.; Draft Report, "Preliminary Economic Assessment of Effluent Limitations in the Inorganic Chemical Industry."

TABLE 44-2 - EXISTING REGULATIONS - EFFLUENT LIMITATION GUIDELINES

SUBCATEGORY Sodium Thiosulfate

SUBPART BG (40CFR 415.590, 5/22/75)

		STANDARDS					
		BPCTCA		BATEA		NSPS	
Product Process	Para-meters	Max.[1] kg/kkg (mg/l)	Avg.[2] k/kkg (mg/l)	Max. k/kkg (mg/l)	Avg. k/kkg (mg/l)	Max. k/kkg (mg/l)	Avg. k/kkg (mg/l)
Sodium Thio-sulfate	Reserved	Reserved		Reserved		Reserved	

[1]Max. = Maximum of any one day.

[2]Avg. = Average of daily values for thirty consecutive days shall not exceed.

SECTION 45

SULFUR DIOXIDE INDUSTRY

45.1 ASSESSMENT OF THE WATER POLLUTION POTENTIAL

45.1.1 Industry Profile and Analytical Results

Most sulfur dioxide is produced in the gaseous form, although a small percentage is also produced in liquid form. In the gaseous form, it is predominantely used in on-site manufacture of sulfuric acid. It is also used in the paper and petroleum industries, as well as for fermentation control in the wine industry, for bleaching in the textile and food industries and in the production of other chemicals.

The industry profile data in this subcategory are given in Table 45-1, while existing regulations are summarized in Table 45-2.

No priority pollutants were found at significant levels in the waste during screening of Sulfur Dioxide Plant #363. On the basis of these findings, this subcategory has been recommended as an exclusion candidate under Paragraph 8.

TABLE 45-1 - SUBCATEGORY PROFILE DATA SUMMARY

SUBCATEGORY	SULFUR DIOXIDE
Total subcategory capacity rate	
Total subcategory production rate	
Number of plants in this subcategory	15
308 Data on file for	5
With total capacity of	453,000 kkg/year
With total production of	364,000 kkg/year
Representing capacity	
Representing production	
Plant production range:	
Minimum	27,800 kkg/year
Maximum	170,000 kkg/year
Average production	
Median production	
Average capacity utilization	
Plant age range:	
Minimum	3 years
Maximum	51 years
Wastewater flow range:	
Minimum	
Maximum	
Volume per unit product:	
Minimum	
Maximum	

Sources of data are Stanford Research Institute, Directory of Chemical Producers, U.S.A., 1977, U.S. Department of Commerce, Current Industrial Reports, December 1977; Energy and Environmental Analysis, Inc.; Draft Report, "Preliminary Economic Assessment of Effluent Limitations in the Inorganic Chemical Industry."

TABLE 45-2 - EXISTING REGULATIONS - EFFLUENT LIMITATION GUIDELINES

SUBCATEGORY Sulfur Dioxide

SUBPART BI (40CFR 415.610, 5/22/75)

		STANDARDS					
		BPCTCA		BATEA		NSPS	
Product Process	Parameters	Max.[1] kg/kkg (mg/l)	Avg.[2] k/kkg (mg/l)	Max. k/kkg (mg/l)	Avg. k/kkg (mg/l)	Max. k/kkg (mg/l)	Avg. k/kkg (mg/l)
Sulfur Dioxide	Reserved	Reserved		Reserved		Reserved	

[1]Max. = Maximum of any one day.

[2]Avg. = Average of daily values for thirty consecutive days shall not exceed.

REFERENCES

1. U.S. Environmental Protection Agency. Major Inorganic Products, Development Document. EPA-440/1-74-007a, 1974.

2. U.S. Environmental Protection Agency. Development Document for Interim Final Effluent Limitations Guidelines and Proposed New Source Performance Standards for the Significant Inorganic Products. EPA-440/1-75-037, 1975. 358 pp.

3. Calspan Corp. Addendum to Development Document for Effluent Limitations Guidelines and New-Source Performance Standards. Major Inorganic Products Segment of Inorganic Chemicals Manufacturing Point Source Category. Contract No. 68-01-3281, 1978.

4. Sampling Screening Procedure for the Measurement of Priority Pollutants. U.S. Environmental Protection Agency, 1976. 6 pp.

5. Coleman, R. T., J. D. Colley, R. F. Klausmeiser, D. A. Malish, N. P. Meserole, W. C. Micheletti, and K. Schwitzgebel. Treatment Methods for Acidic Wastewater Containing Portntially Toxic Metal Compounds. EPA Contract No. 68-02-2608, U.S. Environmental Protection Agency, 1978. 220 pp.

6. Kraus, K. A., and H. O. Phillips. Processes for Removal and/or Separation of Metals from Solutions. U.S. Patent 3,317,312, U.S. Patent Office, May 2, 1967. 9 pp.

7. Scott, M. C. Heavy Metals Removal at Phillips Plating. WWEMA Industrial Pollution Conference, St. Louis, Missouri, 1978. 16 pp.

8. Scott, M. C. Sulfex™ - A New Process Technology for Removal of Heavy Metals from Waste Streams. The 32nd Annual Purdue Industrial Waste Conference, Lafayette, Indiana, 1977. 17 pp.

9. Patterson, J. W., and R. A. Minear. Wastewater Treatment Technology. Illinois Institute of Technology, 1973.

10. Patterson, J. W. Wastewater Treatment Technology. Ann Arbor Science Publishers, Inc. Ann Arbor, Michigan, 1975.

11. Schlauch, R. M., and A. C. Epstein. Treatment of Metal Finishing Wastes by Sulfide Precipitation. EPA-600/2-75-049, U.S. Environmental Protection Agency, 1977. 89 pp.

12. Campbell, H. J., Jr., N. C. Scrivner, K. Batzar, and R. F. White. Evaluation of Chromium Removal from a Highly Variable Wastewater Stream. The 32nd Annual Purdue Industrial Waste Conference, Lafayette, Indiana, 1977. 38 pp.

13. Wing, R. E., C. L. Swanson, W. M. Doane, and C. R. Russell. Heavy Metal Removal with Starch Xanthate-Cationic Polymer Complex. J. Water Pollution Control Federation, 46(8): 2043-2047, 1974.

14. Wing, R. E. Heavy Metal Removal from Wastewater with Starch Xanthate. In: Proceedings of the 29th Annual Purdue Industrial Waste Conference, Lafayette, Indiana, 1974. pp. 348-356.

15. Wing. R. E. Removal of Heavy Metals from Wastewater with a Starch Xanthate-Cationic Polymer Complex. The 46th Annual Conference of the Water Pollution Control Federation, Cleveland, Ohio, 1973. 38 pp.

16. Wing, R. E. Removal of Heavy Metals from Wastewater with Starch Xanthate. Presented at the Traces of Heavy Metals in Water: Removal and Monitoring Conference, Princeton, New Jersey, 1973. pp. 258-273.

17. Swanson, C. L., R. E. Wing, W. M. Doane, and C. R. Russell. Mercury Removal from Waste Water with Starch Xanthate-Cationic Polymer Complex. Environmental Science & Technology 7(7):614-619, 1973.

18. Hanway, J. E., Jr., R. G. Mumford, and D. G. Barth. A Promising New Process for Removing Heavy Metals from Wastewater. Civial Engineering-ASCE 47(10):78-79, 1976.

19. Hanway, J. E., Jr., R. G. Mumford, and P. N. Mishra. Treatment of Industrial Effluents for Heavy Metals Removal Using the Cellulose Xanthate Process. The 71st Annual Meeting of the American Institute of Chemical Engineers, Miami, Florida, 1978. 21 pp.

20. Wing, R. E., L. L. Navickis, B. K. Jasberg, and W. E. Rayford. Removal of Heavy Metals from Industrial Wastewaters Using Insoluble Starch Xanthate. EPA-600/2-78-085, U.S. Environmental Protection Agency, 1978. 116 pp.

21. de Jong, G. J., and Ir. C. J. N. Rekers. The Akzo Process for the Removal of Mercury from Waste Water. Journal of Chromatography 102: 443-451, 1974.

22. van der Heem, P. The Removal of Traces of Heavy Metals from Drinking Water and Industrial Effluent with Ion Exchangers. The Regional American Chemical Society Meeting, 1977. 16 pp.

23. Chemical Marketing Recorder, July 24, 1978.

24. Slen, T. T., M. Chem, and J. Lauber. Incineration of Toxic Chemical Wastes. Pollution Engineering 10(10):42, 1978.

25. TRW Systems Group. Recommended Methods of Reduction, Neutralization, Recovery or Disposal of Hazardous Waste. NTIS PB-224589, 1973.

26. Ellerbusch, F., and H. S. Skrovronek. Oxidative Treatment of Industrial Wastewater. Industrial Water Engineering 14(5):20-29, 1977.

27. Knopp, P. V., and T. L. Randall. Detoxification of Specific Organic Substances by Wet Oxidation. The 51st Annual Conference of Water Pollution Control Federatoin, 1978.

28. Arthur D. Little, Inc. Treatment Technology Handbook.

29. Schell, W. J. Membrane Ultrafiltration for Water Treatment. Envirogenics Systems Co.

30. Vanderborght, B. M., and R. E. Van Grieken. Enrichment of Trace Metals in Water by Adsorption on Activated Carbon. Analytical Chemistry 49(2):311-316, 1977.

31. Cheremisinoff, P. N., and F. Ellerbusch. Carbon Adsorption Handbook. Ann Arbor Science Publishers, Inc., Ann Arbor Michigen, 1978.

32. Jacobs Engineering Group, Inc. Study of the Application of BAC to Industrial Waste Water. Office of Water Research and Tehcnology.

33. Otsubo, K., S. Yamazaki, and Y. Sakuraba. Advanced Water Treatment for Fluoride-Containing Waste Water. Hitachi Hyoron 58(3):219-224, 1976. Trans. for Reckwell Intl.

34. Zabban, W., and H. W. Jewett. The Treatment of Fluoride Wastes. In: Proceedings of the 22nd Annual Purdue Industrial Waste Conference, Lafayette, Indiana, 1967. pp. 706-716.

35. Rubel, F., Jr., and R. D. Woosley. Removal of Excess Fluoride from Drinking Water. EPA-570/9-78-001. U.S. Environmental Protection Agency, 1978. 16 pp.

36. Wu, Y. C. Activated Alumina Removes Fluoride Ions From Water. Water and Sewage Works 125(6):76-82, 1978.

37. Maier, F. J. Partial Defluoridation of Water. Public Works 91(11), 1960.

38. Maier, F. J. New Fluoride Removal Method Cuts Costs. Engineering News-Record 148(24):40, 1952.

39. Kennedy, D. C., M. A. Kimler, and C. A. Hammer. Functional Design of a Zero-Discharge Wastewater Treatment System for the National Center for Toxicological Research. In: Proceedings of the 31st Annual Purdue Industrial Waste Conference, Lafayette, Indiana, 1976. pp. 823-830.

40. Hannah, S. A., M. Jelus, and J. M. Cohen. Removal of Uncommon Trace Metals by Physical and Chemical Treatment Processes. Journal Water Pollution Control Federation 49(11):2297-2309, 1977.

41. Maruyama, T., S. A. Hannah, and J. M. Cohen. Metal Removal by Physical and Chemical Treatment Processes. Journal Water Pollution Control Federation 47(5):962-975, 1975.

42. Gulledge, H. H., and J. T. O'Connor. Removal of Arsenic (V) from Water by Adsorption on Aluminum and Ferric Hydroxides. Journal American Water Works Association 65(8):548-552, 1973.

43. Gupta, S., and K. Y. Chen. Arsenic Removal by Adsorption. Journal Water Pollution Control Federation 50(3):493, 1978.

44. Larsen, H. P., J. K. Shou, and L. W. Ross. Chemical Treatment of Metal-Bearing Mine Drainage. Gournal Water Pollution Control Federation 45(8):168201695, 1973.

45. Nilsson, R. Removal of Metals by Chemical Treatment of Municipal Waste Water. Water Research 5:51-60, 1971.

46. Sorg, T. J., O. T. Love, and G. S. Logsdon. Manual of Treatment Techniques for Meeting the Interim Primary Drinking Water Regulations. EPA-600/8-77-005. U.S. Environmental Protection Agency, 1977. 73 pp.

47. Colley, J. D., C. A. Muela, M. L. Owen, N. P. Meserole, J. B. Riggs, and J. C. Terry. Assessment of Technology for Control of Toxic Effluents from the Electric Utility Industry. EPA-600/7-78-090. U.S. Environmental Protection Agency, 1978.

48. Smithson, G. R., Jr. An Investigation of Techniques for Removal of Chromium from Electroplating Wastes. EPA 12010 EIE. U.S. Environemntal Protection Agency, 1971, 91 pp.

49. Patterson, J. W., H. E. Allen, and J. J. Scala. Carbonate Precipitaiton for Heavy Metals Pollutants. Journal Water Pollution Control Federation 49(12):2397-2410, 1977.

50. Sabadell, J. E. Traces of Heavy Metals in Water Removal Processes and Monitoring. EPA-902/9-74-001. U.S. Environmental Protection Agency, 1973.

51. U.S. Environmental Protection Agency. Environmental Multi-Media Assessment of Selected Industrial Inorganic Chemicals. EPA Contract No. 68-03-2403, 1977.

BIBLIOGRAPHY

Andco Environmental Processes, Inc. Andco Chromate and Heavy Metal Removal System. 1977

Anderson, J. R., and C. O. Weiss. Method for Precipitation of Heavy Metal Sulfides. U.S. Patent 3,740,331. U.S. Patents Office. June 19, 1973.

Birkett, J. D. Electrodialysis - An Overview. Industrial Water Engineering 14(5):6-9, 1977.

Bowen, L. B., J. H. Mallinson, and J. H. Cosgrove. Waste Recovery: Zinc Recovery from Rayon Plant Sludge. Chemical Engineering Progress 73(5):50-54, 1977.

Case, O. P. Metallic Recovery from Waste Waters Utilizing Cementation. EPA 670/2-74-008. U.S. Environmental Protection Agency, 1974. 36 pp.

Cheng M. H., J. W. Patterson, and R. A. Minear. Heavy Metals Uptake by Activated Sludge. Journal Water Pollution Control Federation 47(2):362-376, 1975.

Cheremisinoff, P. N., and Y. H. Habib. Cadmium, Chromium, Lead, Mercury: A Plenary Account for Water Pollution. Part 2 - Removal Techniques. Water and Sewage Works 119(8):46-51, 1972.

Cohen, J. M. Trace Metal Removal by Wastewater Treatment. EPA Technology Transfer, 1977.

Current Industrial Reports Inorganic Chemicals. U.S. Department of Commerce Bureau of the Census, 1977.

Davis, H. J., F. S. Model, and J. R. Leal. PBI Reverse Osmosis Membrane for Chromium Plating Rinse Water. EPA-600/2-78-040. U.S. Environmental Protection Agency, 1978. 35 pp.

Dean, J. G., F. L. Bosqui, and K. H. Lanouette. Removing Heavy Metals from Waste Water. Environmental Science and Technology 6(6):518-522, 1972.

Dow Chemical Company. Selecting Ion Exchange Resins for Water Treatment Applications. Industrial Water Engineering 14(5):11-13, 1977.

Energy and Environmental Analysis, Inc. Draft Preliminary Economic Assessment of Effluent Limitations in the Inorganic Chemicals Industry. 1978.

FMC Corp. Industrial Wastewater Treatment. A guidebook to Hydrogen Peroxide for Industrial Wastes. Philadelphia, Pennsylvania.

FMC Corp. Hydrogen Peroxide. Chemical and Technical Data. Philadelphia, Pennsylvania.

Ford, D. L. Putting Activated Carbon in Perspective to 1983 Guidelines. Industrial Water Engineering 14(3):20-27, 1977.

General Technology Corporation. Draft Contractor Document for Major Inorganic Chemicals. 1973.

General Technology Corporation. Final Contractor Document for Major Inorganic Chemicals. 1975.

Greek, B. F., and W. F. Fallwell. Chlorine, Major Alkalies Still in Doldrums. Chemical and Engineering News 56(6):8-11, 1978.

Grover, P. A Waste Stream Management System. Chemical Engineering Progress 73(12):71-73, 1977.

Haggenmacher, J. H. Chromate Removal Decreases Blowdown to Below 0.05 ppm Hexavalent Chrome. Chemical Processing, 1977.

Hoyle, D. L. Designing for pH Control. Chemical Engineering 83(24):121-126, 1976.

Jacobs Engineering Group, Inc. Estimating Standards

Jenkins, S. H., D. G. Keight, and R. E. Humphreys. The Solubility of Heavy Metal Hydroxides in Water, Sewage and Sewage Sludge - I The Solubility of Some Metal Hydroxides. Int. J. Air Wat. Poll. 8:537-556, 1964.

Jenkins, S. H., D. G. Keight, and A. Ewins. The Solubility of Heavy Metal Hydroxides in Water, Sewage, and Dewage Sludge - II The Precipitation of Metals by Sewage. Int. J. Air Wat. Poll. 8:679-693, 1964.

Keating, E. J., R. A. Brown, and E. S. Greenberg. Phenolic Problems Solved with Hydrogen Peroxide Oxidation. The 33rd Annual Industrial Waste Conference, West Lafayette, Indiana, 1978. 20 pp.

Kibble, W. H. Hydrogen Peroxide Helps Solve Industrial Wastewater Problems. Industrial Wastes 26-29, 1978.

Knocke, W. R., T. Clevenger, M. M. Ghosh, and J. T. Novak, Recovery of Metals from Electroplating Wastes. The 33rd Annual Industrial Waste Conference, west Lafayette, Indiana, 1978. 37 pp.

Lanouette, K. H. Heavy Metals Removal. Chemical Engineering Deskbook Issue 84(22):73-80, 1977.

Linstedt, K. D., C. P. Houck, and J. T. O'Connor. Trace Element Removals in Advnaced Wastewater Treatment Processes. Journal Water Pollution Control Federation 43(7):1507-1513, 1971.

Mir, L., W. Eykamp, and R. L. Goldsmith. Current and Developing Applications for Ultrafiltration. Industrial Water Engineering 14(3):14-19, 1977.

Morton, S. D., and E. W. Sawyer. Clay Minerals Remove Organics, Viruses and Heavy Metals from Water. Water and Sewage Works 123(Reference No. 1976):R-117-R120, 1976.

Porter, J. W., Brothers, G. W., and W. B. Whitton. Cost Estimating Guidelines for Wastewater Treatment Systems. EPA 17090 DRU. U.S. Environmental Protection Agency, 1970. 96 pp.

Resources Conservation Co. The RCC Brine Concentrator. Renton, Washington.

Richardsons Estimating Standards. Means Cost Data. 1978.

Rizzo, J. L., and A. R. Shepherd. Treating Industrial Wastewater with Activated Carbon. Chemical Engineering 84(1): 95-100, 1977.

Rosenzweig, M. D. Mercury Cleanup Routes - I Chemical Engineering 82(2):60-61, 1975.

Sabadell, J. E., ed. Traces of Heavy Metals in Water Removal Processes and Monitoring. EPA-902/9-74-001. U.S. Environmental Protection Agency, 1973. 342 pp.

Shen, Y.S. Study of Arsenic Removal from Drinking Water. Water Journal American Water Works Association 65(8):543-548, 1973.

Sigworth, E. A., and S. B. Smith. Adsorption of Inorganic Compounds by Activated Carbon. Journal American Water Works Association 64(6):386-390, 1972.

Smith, R. Cost of Conventional and Advanced Treatment of Wastewater. Journal Water Pollution Control Federation 40(9): 1546-1574, 1968.

Sonksen, M. K., F. M. Sittig, E. F. Maziarz. Treatment of Oily Wastes by Ultrafiltration/Reverse Osmosis. A Case History. The 33rd Annual Industrial Waste Conference, West Lafayette, Indiana, 1978. 28 pp.

Stanford Research Institute. Directory of Chemical Producers U.S.A. 1977.

Stinson, G. F. Electrochemical Wastewater Treatment Process. Personal Communication. 1978.

Thiem, L. D. Badorek, and J. T. O'Connor. Removal of Mercury From Drinking Water Using Activated Carbon. Journal American Water Works Association 68(8):447-451, 1976.

Thompson, G.S. Jr. First Annual Conference on Advanced Pollution Control for the Metal Finishing Industry. EPA-600/8-78-010. U.S. Environmental Protection Agency, 1978. 143 pp.

S. K. Williams Company. Waste Water Treatment and Reuse in a Metal Finishing Job Shop. EPA-670/2-74-042. U.S. Environmental Protection Agency, 1974. 67 pp.

Wiseman, S., and B. T. Bawden. Removing Refractory Compounds From Waste Water. Chemical Engineering Progress 73(5):60-64, 1977.

Zabban, W., and R. Helwick. Defluoridation of Wastewater. The 30th Annual Industrial Waste Conference, West Lafayette, Indiana, 1975. 38 pp.

Zievers, J. F., R. E. Wing, S. Crain, and D. Gordon. Practical Use of Starch Insoluble Xanthates. Industrial Filter and Pump MFG. Co. 1977. 20 pp.

ACKNOWLEDGEMENTS

The staff of Jacobs Environmental Division of Jacobs Engineering Group Inc. is gratefully acknowledged for their assistance in field investigations, sample analysis, technical engineering, and preparation of the report. Mr. Henry Cruse was Program Director at Jacobs, the Project Manager was Mr. Michael Warner, and the Jacobs personnel who provided major technical input to this project were:

Bonnie J. Parrott
Mazhar Mohiuddin
Mahendra L. Shah
Carl B. Johnston
Dr. Kar Y. Yu
W. Dennis Merklin
Mark K. Jackson

John H. Taylor, Jr.
(Laboratory Director)
Dr. Nelson F. Phelan
(Senior Analytical Chemist)
Dale R. Rushneck
(Mass Spectroscopist)

Acknowledgement and appreciation are also extended to Dr. Martin D. Schwartz and Dr. Ben C. Edmondson of Technology Associates of Southern California, Inc. for their invaluable contributions to the project.

The assistance of the EPA project officers and staff of the Effluent Guidelines Division is also greatly appreciated, including the guidance given by Mr. Walter J. Hunt who was the Inorganic Chemicals Branch Chief through January, 1979.

APPENDIX A
ANALYSIS OF LONG TERM EFFLUENT MONITORING DATA FOR THE INORGANIC CHEMICALS INDUSTRY

INTRODUCTION

This appendix contains tabulated summaries of the statisical parameters derived from the analysis of long term effluent monitoring data colleced by industry and reported to the EPA or state regulatory agencies during the last two or three years. The particular sets of data selected for analysis are taken from plants which apply a well defined treatment technology to process waste waters from single product or product group manufacturing operations associated with a specific subcategory. Data have been excluded which represent waste waters diluted with noncontact cooling water or commingled with waste sources from unrelated products. Each table in the appendix indicates the actual number of observations on which the calculated statistical parameters are based. The derivation of the parameters was discussed in Section 9 of the draft report.

The statistical performance information presented here was used to develop the control parameter limitations for each subcategory considered in detail in the main report. These were expressed as the achievable Quality Limits (mg/l) and Emission Limits (kg/kkg) for each pollutant assuming the model plant flow conditions and applying the specified pollutant removal technologies at each level of treatment. The tables on the following pages summarize the available historical effluent monitoring results and give the individual plant performance characteristics in concentration and loading units for both daily and monthly measurements. Three sets of variability factors are shown on each table however, only the middle value (Variability Factor II) is used to calculate the plant "Performance Standards" shown in the right hand column of each table. Similarly, the Variability Factor Ratio (VFR) used to calculate the subcategory "Control Parameter Limitations" is the Variability Factor II for daily measurements divided by Variability Factor II for 30-day average data.

In general, the monitoring time period for most firms doing so for NPDES permits was from January 1, 1975 through June 30, 1976. Firms who monitored over this time period provided up to 18 months of 30 day average data and as many

as 547 measurements of daily or 24 hour data. In cases where monitoring was done less frequently than daily, perhaps omitted on weekends, or only weekly measurements, the actual number of observations used in the calculation is recorded for each parameter.

Included in this Appendix are statistical measures appropriate to the analysis of long term monitoring data and the historical performance of inorganic chemical pollutant discharge levels. The statistics presented include measures of amount or level of pollutant discharge, such as long term average, minimum level, and maximum level for both daily, or 24 hour measurements, as well as 30 day average measurements.

Also given in the table is the co-efficient of variation, CV, which relfects the dispersion of measurements above and below the long term average level. Other measures of variability that may be of interest, such as range or standard deviation are also calculated for any parameter from any information given herein. In addition to statistics of pollutant level and variation of pollutant level, three variability factors are printed in each parameter. A variability factor is the ratio of an upper percentile of the distribution of pollutant measurements to the long term average pollutant level. The basis of the particular upper percentile chosen for Variability Factors I, II, and III is explained as a footnote to the table.

The historical performance of each firm, using Variability Factor II, is given for each parameter and is expressed in the same units as the long term average.

For reference, the tables in this Appendix are organized by inorganic chemical subcategory and the manufacturing process in that subcategory. For each plant, as many as four tables are included. These tables appear in the following order:

1. Daily measurements of pollutant concentrations in the effluent stream given in parts per million (ppm).

2. Daily measurements of total effluent discharge load measured in kilograms per day.

3. 30 Day averages of pollutant concentration (ppm).

4. 30 Day averages of total effluent pollutant load (kg/day).

Table A-1a

Historical Effluent Monitoring Data Summary
with Variability Factors and Performance Standards
Daily Measurements
Subcategory Chlorine
Mercury Cell Process
Plant #747

Parameter	Historical Summary Statistics					Variability Factors			Performance Standards
(ppm)	No	Min	Aver	Max	CV	I	II	III	(V.F. II)
Mercury,Hg	530	.006	.014	.021	.286	1.54	1.88	2.15	.026
TSS	530	1.00	7.4	62.	.581	2.09	3.04	3.87	22.5
Chlorine,Cl2 (Total Residual)	428	0.08	.638	1.50	.463	1.75	2.28	2.71	1.46

I - 95% of the daily maximum measurements expected to be less than the performance standard, P.
(Z = 1.64)

II - 99% of the daily maximum measurements expected to be less than the performance standard, P.
(Z = 2.33)

III - All but one daily maximum measurement per year expected to be less than the performance standard, P.
(Z = 2.78)

Table A-1b

Historical Effluent Monitoring Data Summary
with Variability Factors and Performance Standards
Daily Measurements
Subcategory Chlorine
Mercury Cell Process
Plant #747

Parameter	Historical Summary Statistics					Variability Factors			Performance Standards
(kg/day)	No	Min	Aver	Max	CV	I	II	III	(V.F. II)
Mercury,Hg	530	.015	.031	.047	.129	1.24	1.66	1.84	.051
Chlorine,Cl2 (Available)	420	.156	1.44	3.40	.463	1.87	2.54	3.09	3.65

I - 95% of the daily maximum measurements expected to be less than the performance standard, P.
(Z = 1.64)

II - 99% of the daily maximum measurements expected to be less than the performance standard, P.
(Z = 2.33)

III - All but one daily maximum measurement per year expected to be less than the performance standard, P.
(Z = 2.78)

Table A-1c

Historical Effluent Monitoring Data Summary
with Variability Factors and Performance Standards
30 Day Averages
Subcategory Chlorine
Mercury Cell Process
Plant #747

Parameter	Historical Summary Statistics					Variability Factors			Performance Standards
(ppm)	No	Min	Aver	Max	CV	I	II	III	(V.F. II)
Mercury,Hg	18	.008	.014	.020	.293	1.40	1.47	1.67	0.21
TSS	18	5.1	7.4	12.9	.355	1.49	1.58	1.83	11.7
Chlorine,Cl2 (Available)	18	.380	.638	.847	.194	1.27	1.38	1.45	0.88

I - All but one of the 12 monthly averages in one year are expected to be within the performance standard, P. (Z = 1.39)

II - 95% of the monthly averages are expected to be within the performance standard, P. (Z = 1.64)

III - 99% of the monthly averages are expected to be within the performance standard, P. (Z = 2.33)

Table A-1d

Historical Effluent Monitoring Data Summary
with Variability Factors and Performance Standards
30 Day Averages
Subcategory Chlorine
Mercury Cell Process
Plant #747

Parameter	Historical Summary Statistics					Variability Factors			Performance Standards
(kg/day)	No	Min	Aver	Max	CV	I	II	III	(V.F. II)
Mercury,Hg	18	.020	.031	.037	.197	1.28	1.33	1.47	.041
Chlorine,Cl2	18	.91	1.44	2.23		1.35	1.50	1.59	2.16

I - All but one of the 12 monthly averages in one year are expected to be within the performance standard, P. (Z = 1.39)

II - 95% of the monthly averages are expected to be within the performance standard, P. (Z = 1.64)

III - 99% of the monthly averages are expected to be within the performance standard, P. (Z = 2.33)

Table A-2a

Historical Effluent Monitoring Data Summary
with Variability Factors and Performance Standards
Daily Measurements
Subcategory Chlorine
Mercury Cell Process
Plant #317

Parameter	Historical Summary Statistics					Variability Factors			Performance Standards
(ppb)	No	Min	Aver	Max	CV	I	II	III	(V.F. II)
Mercury,Hg	516	.041	.634	2.87	.910	2.62	4.52	6.40	2.87

I - 95% of the daily maximum measurements expected to be less than the performance standard, P.
(Z = 1.64)

II - 99% of the daily maximum measurements expected to be less than the performance standard, P.
(Z = 2.33)

III - All but one daily maximum measurement per year expected to be less than the performance standard, P.
(Z = 2.78)

Table A-2b

Historical Effluent Monitoring Data Summary
with Variability Factors and Performance Standards
Daily Measurements
Subcategory Chlorine
Mercury Cell Process
Plant #317

Parameter	Historical Summary Statistics					Variability Factors			Performance Standards
(kg/day)	No	Min	Aver	Max	CV	I	II	III	(V.F. II)
Mercury,Hg	516	.0005	.011	.088	.818	2.58	4.35	6.10	.046

I - 95% of the daily maximum measurements expected to be less than the performance standard, P.
(Z = 1.64)

II - 99% of the daily maximum measurements expected to be less than the performance standard, P.
(Z = 2.33)

III - All but one daily maximum measurement per year expected to be less than the performance standard, P.
(Z = 2.78)

Table A-2c

Historical Effluent Monitoring Data Summary
with Variability Factors and Performance Standards
30 Day Averages
Chlorine Subcategory
Mercury Cell Process
Plant #317

Parameter	Historical Summary Statistics					Variability Factors			Performance Standards
(ppb)	No	Min	Aver	Max	CV	I	II	III	(V.F. II)
Mercury,Hg	17	.325	.634	1.15	.293	1.42	1.45	1.68	0.919

I - All but one of the 12 monthly averages in one year are expected to be within the performance standard, P. (Z = 1.39)

II - 95% of the monthly averages are expected to be within the performance standard, P. (Z = 1.64)

III - 99% of the monthly averages are expected to be within the performance standard, P. (Z = 2.33)

Table A-2d

Historical Effluent Monitoring Data Summary
with Variability Factors and Performance Standards
30 Day Averages
Subcategory Chlorine
Mercury Cell Process
Plant #317

Parameter	Historical Summary Statistics					Variability Factors			Performance Standards
(kg/day)	No	Min	Aver	Max	CV	I	II	III	(V.F. II)
Mercury,Hg	17	.005	.011	.019	.273	1.38	1.45	1.64	.015

I - All but one of the 12 monthly averages in one year are expected to be within the performance standard, P. (Z = 1.39)

II - 95% of the monthly averages are expected to be within the performance standard, P. (Z = 1.64)

III - 99% of the monthly averages are expected to be within the performance standard, P. (Z = 2.33)

Table A-3a

Historical Effluent Monitoring Data Summary
with Variability Factors and Performance Standards
Daily Measurements
Subcategory Chlorine
Mercury Cell Process
Plant #195

Parameter	Historical Summary Statistics					Variability Factors			Performance Standards
(ppm)	No	Min	Aver	Max	CV	I	II	III	(V.F. II)
Mercury,Hg	349	.0005	.014	.136	2.29	3.69	9.45	17.49	0.132

I - 95% of the daily maximum measurements expected to be less than the performance standard, P.
(Z = 1.64)

II - 99% of the daily maximum measurements expected to be less than the performance standard, P.
(Z = 2.33)

III - All but one daily maximum measurement per year expected to be less than the performance standard, P.
(Z = 2.78)

Table A-3b

Historical Effluent Monitoring Data Summary
with Variability Factors and Performance Standards
Daily Measurements
Subcategory Chlorine
Mercury Cell Process
Plant #195

Parameter	Historical Summary Statistics					Variability Factors			Performance Standards
(kg/day)	No	Min	Aver	Max	CV	I	II	III	(V.F. II)
Mercury,Hg	349	.0001	.003	.088	2.33	3.77	10.22	19.60	.028

I - 95% of the daily maximum measurements expected to be less than the performance standard, P.
(Z = 1.64)

II - 99% of the daily maximum measurements expected to be less than the performance standard, P.
(Z = 2.33)

III - All but one daily maximum measurement per year expected to be less than the performance standard, P.
(Z = 2.78)

Table A-3c

Historical Effluent Monitoring Data Summary
with Variability Factors and Performance Standards
30 Day Averages
Subcategory Chlorine
Mercury Cell Process
Plant #195

Parameter	Historical Summary Statistics					Variability Factors			Performance Standards
(ppm)	No	Min	Aver	Max	CV	I	II	III	(V.F. II)
Mercury,Hg	17	.0009	.014	.062	1.21	2.67	2.99	3.82	.042

I - All but one of the 12 monthly averages in one year are expected to be within the performance standard, P. (Z = 1.39)

II - 95% of the monthly averages are expected to be within the performance standard, P. (Z = 1.64)

III - 99% of the monthly averages are expected to be within the performance standard, P. (Z = 2.33)

Table A-3d

Historical Effluent Monitoring Data Summary
with Variability Factors and Performance Standards
30 Day Averages
Subcategory Chlorine
Mercury Cell Process
Plant #195

Parameter	Historical Summary Statistics					Variability Factors			Performance Standards
(kg/day)	No	Min	Aver	Max	CV	I	II	III	(V.F. II)
Mercury,Hg	17	.0002	.003	.014	1.33	2.88	3.22	4.15	.0088

I - All but one of the 12 monthly averages in one year are expected to be within the performance standard, P. (Z = 1.39)

II - 95% of the monthly averages are expected to be within the performance standard, P. (Z = 1.64)

III - 99% of the monthly averages are expected to be within the performance standard, P. (Z = 2.33)

Table A-4a

Historical Effluent Monitoring Data Summary
with Variability Factors and Performance Standards
Daily Measurements
Subcategory Chlorine
Mercury Cell Process
Plant #324

Parameter	Historical Summary Statistics					Variability Factors			Performance Standards
(ppm)	No	Min	Aver	Max	CV	I	II	III	(V.F. II)
Mercury,Hg	82	.002	.004	.011	.500	1.73	2.24	2.66	0.009
Chlorine,Cl2 (Total Residual)	49	2.0	19.1	62	1.01	2.78	4.96	7.23	94.7

I - 95% of the daily maximum measurements expected to be less than the performance standard, P.
(Z = 1.64)

II - 99% of the daily maximum measurements expected to be less than the performance standard, P.
(Z = 2.33)

III - All but one daily maximum measurement per year expected to be less than the performance standard, P.
(Z = 2.78)

Table A-4b

Historical Effluent Monitoring Data Summary
with Variability Factors and Performance Standards
Daily Measurements
Subcategory Chlorine
Mercury Cell Process
Plant #324

Parameter	Historical Summary Statistics					Variability Factors			Performance Standards
(kg/day)	No	Min	Aver	Max	CV	I	II	III	(V.F. II)
Mercury,Hg	82	.021	.047	.118	.383	1.71	2.20	2.66	.104
Chlorine,Cl2 (Residual)	49	20.5	203	663	1.03	2.81	5.04	7.39	1026

I - 95% of the daily maximum measurements expected to be less than the performance standard, P.
(Z = 1.64)

II - 99% of the daily maximum measurements expected to be less than the performance standard, P.
(Z = 2.33)

III - All but one daily maximum measurement per year expected to be less than the performance standard, P.
(Z = 2.78)

Table A-4c

Historical Effluent Monitoring Data Summary
with Variability Factors and Performance Standards
30 Day Averages
Subcategory Chlorine
Mercury Cell Process
Plant #324

Parameter	Historical Summary Statistics					Variability Factors			Performance Standards
(ppm)	No	Min	Aver	Max	CV	I	II	III	(V.F. II)
Mercury,Hg	22	.003	.004	.008	.250	1.42	1.60	1.71	0.006
Chlorine,Cl2 (Total Residual)	14	4.0	19.1	57.8	.969	2.34	2.91	3.25	55.6

I - All but one of the 12 monthly averages in one year are expected to be within the performance standard, P. (Z = 1.39)

II - 95% of the monthly averages are expected to be within the performance standard, P. (Z = 1.64)

III - 99% of the monthly averages are expected to be within the performance standard, P. (Z = 2.33)

Table A-4d

Historical Effluent Monitoring Data Summary
with Variability Factors and Performance Standards
30 Day Averages
Subcategory Chlorine
Mercury Cell Process
Plant #324

Parameter	Historical Summary Statistics					Variability Factors			Performance Standards
(kg/day)	No	Min	Aver	Max	CV	I	II	III	(V.F. II)
Mercury,Hg	22	.032	.047	.098	.340	1.47	1.66	1.78	.079
Chlorine,Cl2 (Residual)	14	39.1	203	616	.945	2.33	2.89	3.22	588

I - All but one of the 12 monthly averages in one year are expected to be within the performance standard, P. (Z = 1.39)

II - 95% of the monthly averages are expected to be within the performance standard, P. (Z = 1.64)

III - 99% of the monthly averages are expected to be within the performance standard, P. (Z = 2.33)

Table A-5a

Historical Effluent Monitoring Data Summary
with Variability Factors and Performance Standards
Daily Measurements
Subcategory Chlorine
Diaphram Cell Process
Plant #967

Parameter	Historical Summary Statistics					Variability Factors			Performance Standards
(kg/day)	No	Min	Aver	Max	CV	I	II	III	(V.F. II)
Lead,Pb	153	.045	1.42	5.40	.824	2.51	4.12	5.69	5.85

I - 95% of the daily maximum measurements expected to be less than the performance standard, P.
(Z = 1.64)

II - 99% of the daily maximum measurements expected to be less than the performance standard, P.
(Z = 2.33)

III - All but one daily maximum measurement per year expected to be less than the performance standard, P.
(Z = 2.78)

Table A-5b

Historical Effluent Monitoring Data Summary
with Variability Factors and Performance Standards
30 Day Averages
Subcategory Chlorine
Diaphram Cell Process
Plant #967

Parameter	Historical Summary Statistics					Variability Factors			Performance Standards
(kg/day)	No	Min	Aver	Max	CV	I	II	III	(V.F. II)
Lead,Pb	12	.460	1.42	5.40	.824	1.50	1.58	1.83	2.25

I - All but one of the 12 monthly averages in one year are expected to be within the performance standard, P. (Z = 1.39)

II - 95% of the monthly averages are expected to be within the performance standard, P. (Z = 1.64)

III - 99% of the monthly averages are expected to be within the performance standard, P. (Z = 2.33)

Table A-6a

Historical Effluent Monitoring Data Summary
with Variability Factors and Performance Standards
Daily Measurments
Subcategory Hydrofluoric Acid
Plant #722

Parameter	Historical Summary Statistics					Variability Factors			Performance Standards
(ppm)	No	Min	Aver	Max	CV	I	II	III	(V.F. II)
Arsenic,As	50	.020	.035	.100	.314	1.56	1.92	2.20	0.067
Fluoride,F	129	.25	1.39	4.00	.589	2.11	3.08	3.94	4.28
Ammonia,NH3	50	.01	.104	.40	.865	2.58	4.32	6.05	0.449
Lead,Pb	49	.10	.142	1.20	1.58	3.35	7.26	12.02	1.03
Zinc.Zn	51	.04	.140	.47	.807	2.49	4.06	5.59	0.569
TSS	41	1	21.1	144	1.13	2.93	5.48	8.23	116

I - 95% of the daily maximum measurements expected to be less than the performance standard, P.
(Z = 1.64)

II - 99% of the daily maximum measurements expected to be less than the performance standard, P.
(Z = 2.33)

III - All but one daily maximum measurement per year expected to be less than the performance standard, P.
(Z = 2.78)

Table A-6b

Historical Effluent Monitoring Data Summary
with Variability Factors and Performance Standards
Daily Measurements
Subcategory Hydrofluoric Acid
Plant #722

Parameter	Historical Summary Statistics					Variability Factors			Performance Standards
(kg/day)	No	Min	Aver	Max	CV	I	II	III	(V.F. II)
Arsenic,As	50	.052	.383	.598	.345	2.01	2.84	3.57	1.09
Fluoride,F	129	3.98	16.4	65.4	.701	2.31	3.57	4.75	58.6
Ammonia,NH3	50	.114	1.13	4.77	.982	2.75	4.85	7.02	5.48
Lead,Pb	49	.261	1.68	15.0	1.51	3.30	6.98	11.39	11.8
Zinc,Zn	51	.125	1.63	4.64	.920	2.66	4.58	6.52	7.46
TSS	41	14.2	263	1962	1.21	3.02	5.79	8.86	1525

I - 95% of the daily maximum measurements expected to be less than the performance standard, P.
(Z = 1.64)

II - 99% of the daily maximum measurements expected to be less than the performance standard, P.
(Z = 2.33)

III - All but one daily maximum measurement per year expected to be less than the performance standard, P.
(Z = 2.78)

Table A-6c

Historical Effluent Monitoring Data Summary
with Variability Factors and Performance Standards
30 Day Averages
Subcategory Hydrofluoric Acid
Plant #722

Parameter	Historical Summary Statistics					Variability Factors			Performance Standards
(ppm)	No	Min	Aver	Max	CV	I	II	III	(V.F. II)
Arsenic,As	5	.020	.035	.058	.371	1.51	1.73	1.86	0.061
Fluoride,F	5	.769	1.39	2.24	.371	1.52	1.74	1.87	2.42
Ammonia,NH3	6	.028	.104	.170	.548	1.76	2.08	2.27	0.216
Lead,Pb	6	.100	.142	.322	.577	1.80	2.15	2.35	0.305
Zinc,Zn	6	.076	.140	.225	.429	1.59	1.84	1.99	0.258
TSS	5	8.83	21.1	32.4	.483	1.67	1.95	2.12	41.2

I - All but one of the 12 monthly averages in one year are expected to be within the performance standard, P. (Z = 1.39)

II - 95% of the monthly averages are expected to be within the performance standard, P. (Z = 1.64)

III - 99% of the monthly averages are expected to be within the performance standard, P. (Z = 2.33)

Table A-6d

Historical Effluent Monitoring Data Summary
with Variability Factors and Performance Standards
30 Day Averages
Subcategory Hydrofluoric Acid
Plant #722

Parameter	Historical Summary Statistics					Variabilty Factors			Performance Standards
(kg/day)	No	Min	Aver	Max	CV	I	II	III	(V.F. II)
Arsenic,As	5	.215	.383	.598	.345	1.48	1.68	1.80	.644
Fluoride,Fl	5	8.09	16.4	28.5	.438	1.61	1.87	2.02	30.6
Ammonia,NH3	6	.279	1.13	2.15	.639	1.89	2.27	2.49	2.56
Lead,Pb	6	.990	1.68	3.86	.596	1.83	2.18	2.39	3.67
Zinc,Zn	6	.715	1.63	2.94	.531	1.74	2.05	2.24	3.34
TSS	5	106	263	433	.487	1.67	1.96	2.13	516

I - All but one of the 12 monthly averages in one year are expected to be within the performance standard, P. (Z = 1.39)

II - 95% of the monthly averages are expected to be within the performance standard, P. (Z = 1.64)

III - 99% of the monthly averages are expected to be within the performance standard, P. (Z = 2.33)

Table A-7a

Historical Effluent Monitoring Data Summary
with Variability Factors and Performance Standards
30 Day Averages
Subcategory Hydrofluoric Acid/
Plant #705

Parameter	Historical Summary Statistics					Variability Factors			Performance Standards
(kg/day)	No	Min	Aver	Max	CV	I	II	III	(V.F. II)
Fluoride	15	4.54	16.7	27.2	.449	1.62	1.74	2.05	29.0
TSS	16	7.26	28.6	52.2	.441	1.61	1.72	2.02	49.2

I - All but one of the 12 monthly averages in one year are expected to be within the performance standard, P. (Z = 1.39)

II - 95% of the monthly averages are expected to be within the performance standard, P. (Z = 1.64)

III - 99% of the monthly averages are expected to be within the performance standard, P. (Z = 2.33)

Table A-8b

Historical Effluent Monitoring Data Summary
with Variability Factors and Performance Standards
Daily Measurements
Subcategory Titanium Dioxide
Chloride Process
Plant #172

Parameter	Historical Summary Statistics					Variability Factors			Performance Standards
(kg/day)	No	Min	Aver	Max	CV	I	II	III	(V.F. II)
Chromium,Cr	394	.000	.013	.210	1.69	3.45	7.78	13.2	.097
Copper,Cu	394	.000	.027	.190	1.04	2.85	5.20	7.70	.139
Zinc,Zn	394	.000	.028	.108	.679	2.25	3.42	4.50	.097
TSS	394	0.40	8.34	176.	1.92	3.54	8.35	14.6	69.7

I - 95% of the daily maximum measurements expected to be less than the performance standard, P.
(Z = 1.64)

II - 99% of the daily maximum measurements expected to be less than the performance standard, P.
(Z = 2.33)

III - All but one daily maximum measurement per year expected to be less than the performance standard, P.
(Z = 2.78)

Table A-8c

Historical Effluent Monitoring Data Summary
with Variability Factors and Performance Standards
30 Day Averages
Subcategory Titanium Dioxide
Chloride Process
Plant #172

Parameter	Historical Summary Statistics					Variability Factors			Performance Standards
(ppm)	No	Min	Aver	Max	CV	I	II	III	(V.F. II)
Chromium,Cr	13	.000	.004	.013	.750	2.03	2.46	2.72	0.010
Copper,Cu	13	.000	.010	.030	.700	2.01	2.43	2.69	0.024
Zinc,Zn	13	.001	.012	.026	.500	1.66	1.93	2.10	0.023
TSS	13	1.20	3.14	8.60	.599	1.83	1.98	2.39	6.22

I - All but one of the 12 monthly averages in one year are expected to be within the performance standard, P. (Z = 1.39)

II - 95% of the monthly averages are expected to be within the performance standard, P. (Z = 1.64)

III - 99% of the monthly averages are expected to be within the performance standard, P. (Z = 2.33)

Table A-8d

Historical Effluent Monitoring Data Summary
with Variability Factors and Performance Standards
30 Day Averages
Subcategory Titanium Dioxide
Chloride Process
Plant #172

Parameter	Historical Summary Statistics					Variability Factors			Performance Standards
(kg/day)	No	Min	Aver	Max	CV	I	II	III	(V.F. II)
Chromium,Cr	13	.002	.013	.043	.769	2.14	2.62	2.91	.033
Copper,Cu	13	.000	.027	.100	.852	2.22	2.74	3.04	.073
Zinc,Zn	13	.004	.028	.051	4.29	1.56	1.80	1.94	.051
TSS	13	2.60	8.34	24.0	.695	1.96	2.14	2.62	17.9

I - All but one of the 12 monthly averages in one year are expected to be within the performance standard, P. (Z = 1.39)

II - 95% of the monthly averages are expected to be within the performance standard, P. (Z = 1.64)

III - 99% of the monthly averages are expected to be within the performance standard, P. (Z = 2.33)

Table A-9a

Historical Effluent Monitoring Data Summary
with Variability Factors and Performance Standards
Daily Measurements
Subcategory Titanium Dioxide
Sulfate Process
Plant #559

Parameter	Historical Summary Statistics					Variability Factors			Performance Standards
(ppm)	No	Min	Aver	Max	CV	I	II	III	(V.F. II)
Cadmium,Cd	26	.001	.009	.020	.444	1.77	2.03	2.35	0.018
Chromium,Cr	26	.010	.021	.070	.857	2.54	4.23	5.87	0.088
Iron,Fe (total)	30	.40	3.25	19.1	1.42	3.24	6.74	10.9	21.9
Iron,Fe (diss)	153	.080	.279	4.98	2.01	3.59	8.64	15.32	2.41
Lead,Pb	26	.002	.017	.050	.765	2.35	3.67	4.91	0.062
Nickel,Ni	26	.010	.029	.080	.690	2.29	3.52	4.66	0.102
Zinc,Zn	26	.010	.027	.300	2.11	3.63	9.93	18.8	0.268
TSS	183		35.8		1.71	3.44	7.70	13.0	276.

I - 95% of the daily maximum measurements expected to be less than the performance standard, P.
(Z = 1.64)

II - 99% of the daily maximum measurements expected to be less than the performance standard, P.
(Z = 2.33)

III - All but one daily maximum measurement per year expected to be less than the performance standard, P.
(Z = 2.78)

Table A-9b

Historical Effluent Monitoring Data Summary
with Variability Factors and Performance Standards
Daily Measurements
Subcategory Titanium Dioxide
Sulfate Process
Plant #559

Parameter	Historical Summary Statistics					Variability Factors			Performance Standards
(kg/day)	No	Min	Aver	Max	CV	I	II	III	(V.F. II)
Cadmium,Cd	26	.004	.062	.119	.435	1.83	2.44	2.95	.151
Iron,Fe (Total)	30	29	214.	1299	1.44	3.24	6.74	10.9	1444
Iron,Fe (Diss)	153	4.0	19.4	400.	2.37	3.70	9.56	17.74	186.
Lead,Pb	26	.008	.115	.297	.652	2.23	3.36	4.40	.385
Nickel,Ni	26	.057	.191	.463	.675	2.26	3.45	4.55	.658
Zinc,Zn	26	.049	.190	2.24	2.24	3.67	9.24	16.9	1.75
TSS	183	57.	2390		1.76	3.46	7.86	13.4	18784

I - 95% of the daily maximum measurements expected to be less than the performance standard, P.
(Z = 1.64)

II - 99% of the daily maximum measurements expected to be less than the performance standard, P.
(Z = 2.33)

III - All but one daily maximum measurement per year expected to be less than the performance standard, P.
(Z = 2.78)

Table A-9c

Historical Effluent Monitoring Data Summary
with Variability Factors and Performance Standards
30 Day Averages
Subcategory Titanium Dioxide
Sulfate Process
Plant #559

Parameter	Historical Summary Statistics					Variability Factors			Performance Standards
(ppm)	No	Min	Aver	Max	CV	I	II	III	(V.F. II)
Cadmium,Cd	6	.003	.009	.013	.333	1.46	1.55	1.78	0.014
Chromium,Cr	6	.010	.021	.035	.429	1.59	1.70	2.00	0.036
Iron,Fe (Total)	1		3.25		.259	1.36	1.42	1.60	4.62
Iron,Fe (Dissolves)	5	.150	.279	.400	.330	1.46	1.54	1.77	.430
Lead,Pb	6	.003	.017	.028	.529	1.68	1.80	2.14	0.031
Nickel,Ni	6	.012	.029	.042	.346	1.49	1.57	1.82	0.045
Zinc,Zn	6	.010	.027	.068	.741	2.05	2.23	2.75	0.060
TSS	6	1.57	35.8	74.8	.866	2.20	2.42	3.01	86.6

I - All but one of the 12 monthly averages in one year are expected to be within the performance standard, P. (Z = 1.39)

II - 95% of the monthly averages are expected to be within the performance standard, P. (Z = 1.64)

III - 99% of the monthly averages are expected to be within the performance standard, P. (Z = 2.33)

Table A-9d

Historical Effluent Monitoring Data Summary
with Variability Factors and Performance Standards
30 Day Averages
Subcategory Titanium Dioxide
Sulfate Process
Plant #559

Parameter	Historical Summary Statistics					Variability Factors			Performance Standards
(kg/day)	No	Min	Aver	Max	CV	I	II	III	(V.F. II)
Cadmium,Cd	6	.016	.062	.085	.355	1.49	1.58	1.83	.098
Chromium,Cr	6	.070	.136	.202	.338	1.47	1.56	1.79	.212
Iron,Fe (diss)	5	10.0	19.4	27.0	.291	1.40	1.46	1.68	28.4
Lead,Pb	6	.021	.115	.160	.417	1.59	1.69	1.98	.194
Nickel,Ni	6	.080	.191	.258	.330	1.46	1.54	1.77	.294
Zinc,Zn	6	.074	.190	.498	.774	2.08	2.27	2.81	.431
TSS	6	116.	2390	4797	.857	2.19	2.41	3.00	5759

I - All but one of the 12 monthly averages in one year are expected to be within the performance standard, P. (Z = 1.39)

II - 95% of the monthly averages are expected to be within the performance standard, P. (Z = 1.64)

III - 99% of the monthly averages are expected to be within the performance standard, P. (Z = 2.33)

Table A-10a

Historical Effluent Monitoring Data Summary
with Variability Factors and Performance Standards
Daily Measurements
Subcategory Aluminum Fluoride
Plant #251

Parameter	Historical Summary Statistics					Variability Factors			Performance Standards
(ppm)	No	Min	Aver	Max	CV	I	II	III	(V.F. II)
Lead,Pb	152	0.11	2.28	12.8	.601	2.13	3.12	4.01	7.11

I - 95% of the daily maximum measurements expected to be less than the performance standard, P.
(Z = 1.64)

II - 99% of the daily maximum measurements expected to be less than the performance standard, P.
(Z = 2.33)

III - All but one daily maximum measurement per year expected to be less than the performance standard, P.
(Z = 2.78)

Table A-10b

Historical Effluent Monitoring Data Summary
with Variability Factors and Performance Standards
Daily Measurements
Subcategory Aluminum Fluoride
Plant #251

Parameter	Historical Summary Statistics					Variability Factors			Performance Standards
(kg/day)	No	Min	Aver	Max	CV	I	II	III	(V.F. II)
Lead,Pb	152	0.09	2.15	15.3	.753	2.40	3.82	5.17	8.20

I - 95% of the daily maximum measurements expected to be less than the performance standard, P.
(Z = 1.64)

II - 99% of the daily maximum measurements expected to be less than the performance standard, P.
(Z = 2.33)

III - All but one daily maximum measurement per year expected to be less than the performance standard, P.
(Z = 2.78)

Table A-10c

Historical Effluent Monitoring Data Summary
with Variability Factors and Performance Standards
30 Day Averages
Subcategory Aluminum Floride
Plant #251

Parameter	Historical Summary Statistics					Variability Factors			Performance Standards
(ppm)	No	Min	Aver	Max	CV	I	II	III	(V.F. II)
Lead,Pb	10	1.51	2.28	3.90	.601	1.47	1.55	1.78	3.54

I - All but one of the 12 monthly averages in one year are expected to be within the performance standard, P. (Z = 1.39)

II - 95% of the monthly averages are expected to be within the performance standard, P. (Z = 1.64)

III - 99% of the monthly averages are expected to be within the performance standard, P. (Z = 2.33)

Table A-10d

Historical Effluent Monitoring Data Summary
with Variability Factors and Performance Standards
30 Day Averages
Subcategory Aluminum Floride
Plant #251

Parameter	Historical Summary Statistics					Variability Factors			Performance Standards
(kg/day)	No	Min	Aver	Max	CV	I	II	III	(V.F. II)
Lead,Pb	10	1.51	2.15	3.70	.326	1.45	1.54	1.76	3.30

I - All but one of the 12 monthly averages in one year are expected to be within the performance standard, P. (Z = 1.39)

II - 95% of the monthly averages are expected to be within the performance standard, P. (Z = 1.64)

III - 99% of the monthly averages are expected to be within the performance standard, P. (Z = 2.33)

Table A-11a

Historical Effluent Monitoring Data Summary
with Variability Factors and Performance Standards
30 Day Averages
Chrome Pigments Subcategory
Plant #894

Parameter	Historical Summary Statistics					Variability Factors			Performance Standards
(ppm)	No	Min	Aver	Max	CV	I	II	III	(V.F. II)
Arsenic,As	23	.0096	.079	.235	.622		2.02		.156
Cadmium,Cd	23	.050	.079	.164	.339		1.56		.123
Chromium,Cr (hexavalent)	23	.028	.112	.592	1.04		2.70		.302
Chromium,Cr	23	.197	.442	.799	.404		1.66		.733
Copper,Cu	23	.038	.134	.296	.529		1.87		.250
Lead,Pb	23	.217	.412	1.635	.681		2.12		.873
Mercury,Hg	23	.0004	.001	.0018	.401		1.66		.0016
Zinc,Zn	23	.012	.04	.087	.437		1.72		.074
Cyanide, CN (A)	23	.0003	.019	.076	1.57		3.58		.068
Cyanide,CN (total)	23	.025	.118	.316	.995		2.63		.310
SS	23	0.27	11.2	33.3	.662		2.01		22.5

I - All but one of the 12 monthly averages in one year are expected to be within the performance standard, P. (Z = 1.39)

II - 95% of the monthly averages are expected to be within the performance standard, P. (Z = 1.64)

III - 99% of the monthly averages are expected to be within the performance standard, P. (Z = 2.33)

Table A-12a

Historical Effluent Monitoring Data Summary
with Variability Factors and Performance Standards
Daily Measurements
Subcategory Hydrogen Cyanide
Andrussow Process
Plant #782

Parameter	Historical Summary Statistics					Variability Factors			Performance Standards
(ppm)	No	Min	Aver	Max	CV	I	II	III	(V.F. II)
Ammonia,NH3	35	14.	113.	188.	.335	1.62	2.02	2.34	229

I - 95% of the daily maximum measurements expected to be less than the performance standard, P.
(Z = 1.64)

II - 99% of the daily maximum measurements expected to be less than the performance standard, P.
(Z = 2.33)

III - All but one daily maximum measurement per year expected to be less than the performance standard, P.
(Z = 2.78)
expected to be within the performance standard, P.
(Z = 1.39)

Table A-12b

Historical Effluent Monitoring Data Summary
with Variability Factors and Performance Standards
Daily Measurements
Subcategory Hydrogen Cyanide
Andrussow Process
Plant #782

Parameter	Historical Summary Statistics					Variability Factors			Performance Standards
(kg/day)	No	Min	Aver	Max	CV	I	II	III	(V.F. II)
Ammonia,NH3	35	112	1533	2419	.365	1.68	2.14	2.51	3283

I - 95% of the daily maximum measurements expected to be less than the performance standard, P.
(Z = 1.64)

II - 99% of the daily maximum measurements expected to be less than the performance standard, P.
(Z = 2.33)

III - All but one daily maximum measurement per year expected to be less than the performance standard, P.
(Z = 2.78)
expected to be within the performance standard, P.
(Z = 1.39)

Table A-12c

Historical Effluent Monitoring Data Summary
with Variability Factors and Performance Standards
30 Day Averages
Subcategory Hydrogen Cyanide
Andrussow Process
Plant #782

Parameter	Historical Summary Statistics					Variability Factors			Performance Standards
(ppm)	No	Min	Aver	Max	CV	I	II	III	(V.F. II)
Ammonia,NH3	8	80.	113.	134.	.335	1.23	1.32	1.38	150

I - All but one of the 12 monthly averages in one year are expected to be within the performance standard, P. (Z = 1.39)

II - 95% of the monthly averages are expected to be within the performance standard, P. (Z = 1.64)

III - 99% of the monthly averages are expected to be within the performance standard, P. (Z = 2.33)

Table A-12d

Historical Effluent Monitoring Data Summary
with Variability Factors and Performance Standards
30 Day Averages
Subcategory Hydrogen Cyanide
Andrussow Process
Plant #782

Parameter	Historical Summary Statistics					Variability Factors			Performance Standards
(kg/day)	No	Min	Aver	Max	CV	I	II	III	(V.F. II)
Ammonia,NH3	8	908	1533	1941	.212	1.29	1.42	1.49	2177

I - All but one of the 12 monthly averages in one year are expected to be within the performance standard, P. (Z = 1.39)

II - 95% of the monthly averages are expected to be within the performance standard, P. (Z = 1.64)

III - 99% of the monthly averages are expected to be within the performance standard, P. (Z = 2.33)

Table A-13a

Historical Effluent Monitoring Data Summary
with Variability Factors and Performance Standards
Daily Measurements
Subcategory
Andrussow Process
Plant #765

Parameter	Historical Summary Statistics					Variability Factors			Performance Standards
(ppm)	No	Min	Aver	Max	CV	I	II	III	(V.F. II)
Cyanide,CN (Available)	534	.01	.202	3.27	1.58	3.35	7.26	12.01	1.46
Cyanide,CN (Total)	25	.039	.192	.460	.667	2.25	3.42	4.50	.065
Ammonia,NH3	26	.193	3.63	10.2	.636	2.29	3.51	4.64	12.7
COD	25	2.71	15.9	45.2	.552	2.04	2.90	3.66	46.1
TOC	26	.783	8.30	25.6	.845	2.55	4.22	5.88	35.0
SS	22	5	35	267	1.57	3.34	8.16	11.9	286

I - 95% of the daily maximum measurements expected to be less than the performance standard, P.
(Z = 1.64)

II - 99% of the daily maximum measurements expected to be less than the performance standard, P.
(Z = 2.33)

III - All but one daily maximum measurement per year expected to be less than the performance standard, P.
(Z = 2.78)

Table A-13b

Historical Effluent Monitoring Data Summary
with Variability Factors and Performance Standards
30 Day Averages
Subcategory Hydrogen Cyanide
Andrussow Process
Plant #765

Parameter	Historical Summary Statistics					Variability Factors			Performance Standards
(ppm)	No	Min	Aver	Max	CV	I	II	III	(V.F. II)
Cyanide,CN	19	.082	.202	.351	.391	1.54	1.78	1.91	0.359

I - All but one of the 12 monthly averages in one year are expected to be within the performance standard, P. (Z = 1.39)

II - 95% of the monthly averages are expected to be within the performance standard, P. (Z = 1.64)

III - 99% of the monthly averages are expected to be within the performance standard, P. (Z = 2.33)

Table A-13c

Historical Effluent Monitoring Data Summary
with Variability Factors and Performance Standards
30 Day Averages
Hydrogen Cyanide Subcategory
Andrussow Process
Plant #765

Parameter	Historical Summary Statistics					Variability Factors			Performance Standards
(kg/day)	No	Min	Aver	Max	CV	I	II	III	(V.F. II)
Cyanide,CN	19	.082	.202	.351	.391	1.54	1.78	1.91	.358

I - All but one of the 12 monthly averages in one year are expected to be within the performance standard, P. (Z = 1.39)

II - 95% of the monthly averages are expected to be within the performance standard, P. (Z = 1.64)

III - 99% of the monthly averages are expected to be within the performance standard, P. (Z = 2.33)

Table A-14a

Historical Effluent Monitoring Data Summary
with Variability Factors and Performance Standards
Daily Measurements
Subcategory Sodium Dichromate
Plant #493

Parameter	Historical Summary Statistics					Variability Factors			Performance Standards
(ppm)	No	Min	Aver	Max	CV	I	II	III	(V.F. II)
Chromium,Cr (Total)	29	11	25	51	.314	1.58	1.95	2.24	48.7

I - 95% of the daily maximum measurements expected to be less than the performance standard, P.
(Z = 1.64)

II - 99% of the daily maximum measurements expected to be less than the performance standard, P.
(Z = 2.33)

III - All but one daily maximum measurement per year expected to be less than the performance standard, P.
(Z = 2.78)

Table A-14b

Historical Effluent Monitoring Data Summary
with Variability Factors and Performance Standards
Daily Measurements
Subcategory Sodium Dichromate
Plant #493

Parameter	Historical Summary Statistics					Variability Factors			Performance Standards
(kg/day)	No	Min	Aver	Max	CV	I	II	III	(V.F. II)
Chromium,Cr	20	.005	.046	.342	1.80	3.47	7.92	13.56	.368

I - 95% of the daily maximum measurements expected to be less than the performance standard, P.
(Z = 1.64)

II - 99% of the daily maximum measurements expected to be less than the performance standard, P.
(Z = 2.33)

III - All but one daily maximum measurement per year expected to be less than the performance standard, P.
(Z = 2.78)

Table A-15a

Historical Effluent Monitoring Data Summary
with Variability Factors and Performance Standards
Daily Measurements
Subcategory Nickel Sulfate
Plant #120

Parameter	Historical Summary Statistics					Variability Factors			Performance Standards
(ppm)	No	Min	Aver	Max	CV	I	II	III	(V.F. II)
Nickel,Ni	88	.080	1.83	8.33	1.21	3.03	5.84	8.96	10.7

I - 95% of the daily maximum measurements expected to be less than the performance standard, P.
(Z = 1.64)

II - 99% of the daily maximum measurements expected to be less than the performance standard, P.
(Z = 2.33)

III - All but one daily maximum measurement per year expected to be less than the performance standard, P.
(Z = 2.78)

Table A-15b

Historical Effluent Monitoring Data Summary
with Variability Factors and Performance Standards
Daily Measurements
Subcategory Nickel Sulfate
Plant #120

Parameter	Historical Summary Statistics					Variability Factors			Performance Standards
(kg/day)	No	Min	Aver	Max	CV	I	II	III	(V.F. II)
Nickel,Ni	88	1.02	8.32	44.6	1.31	3.13	6.24	9.80	51.9

I - 95% of the daily maximum measurements expected to be less than the performance standard, P.
(Z = 1.64)

II - 99% of the daily maximum measurements expected to be less than the performance standard, P.
(Z = 2.33)

III - All but one daily maximum measurement per year expected to be less than the performance standard, P.
(Z = 2.78)

Table A-15c

Historical Effluent Monitoring Data Summary
with Variability Factors and Performance Standards
30 Day Averages
Subcategory Nickel Sulfate
Plant #120

Parameter	Historical Summary Statistics					Variability Factors			Performance Standards
(ppm)	No	Min	Aver	Max	CV	I	II	III	(V.F. II)
Nickel,Ni	3	1.29	1.83	2.48	1.21	1.38	1.54	1.63	2.82

I - All but one of the 12 monthly averages in one year are expected to be within the performance standard, P. (Z = 1.39)

II - 95% of the monthly averages are expected to be within the performance standard, P. (Z = 1.64)

III - 99% of the monthly averages are expected to be within the performance standard, P. (Z = 2.33)

Table A-15d

Historical Effluent Monitoring Data Summary
with Variability Factors and Performance Standards
30 Day Averages
Subcategory Nickel Sulfate
Plant #120

Parameter	Historical Summary Statistics					Variability Factors			Performance Standards
(kg/day)	No	Min	Aver	Max	CV	I	II	III	(V.F. II)
Nickel,Ni	3	5.04	8.32	11.1	.302	1.42	1.49	1.70	12.4

I - All but one of the 12 monthly averages in one year are expected to be within the performance standard, P. (Z = 1.39)

II - 95% of the monthly averages are expected to be within the performance standard, P. (Z = 1.64)

III - 99% of the monthly averages are expected to be within the performance standard, P. (Z = 2.33)

Table A-16a

Historical Effluent Monitoring Data Summary
with Variability Factors and Performance Standards
30 Day Averages
Subcategory Sodium Hydrosulfite
Plant #672

Parameter	Historical Summary Statistics					Variability Factors			Performance Standards
(kg/day)	No	Min	Aver	Max	CV	I	II	III	(V.F. II)
TSS	36	.91	3.78	41.1	1.69	3.35	3.77	4.94	14.2

I - All but one of the 12 monthly averages in one year are expected to be within the performance standard, P. (Z = 1.39)

II - 95% of the monthly averages are expected to be within the performance standard, P. (Z = 1.64)

III - 99% of the monthly averages are expected to be within the performance standard, P. (Z = 2.33)