ENVIRONMENTAL HEALTH SERIES

Air Pollution

# Air Pollution and the Kraft Pulping Industry

## An Annotated Bibliography

U. S. DEPARTMENT OF HEALTH, EDUCATION, AND WELFARE

Public Health Service

# AIR POLLUTION

# AND THE

# KRAFT PULPING INDUSTRY

## An Annotated Bibliography

by
Paul A. Kenline
Jeremy M. Hales

Field Studies Branch
Robert A. Taft Sanitary Engineering Center

U. S. DEPARTMENT OF HEALTH, EDUCATION, AND WELFARE
Public Health Service
Division of Air Pollution

November 1963

The ENVIRONMENTAL HEALTH SERIES of reports was established to report the results of scientific and engineering studies of man's environment: The community, whether urban, suburban, or rural, where he lives, works, and plays; the air, water and earth he uses and reuses; and the wastes he produces and must dispose of in a way that preserves these natural resources. This SERIES of reports provides for professional users a central source of information on the intramural research activities of the Centers in the Bureau of Disease Prevention and Environmental Control, and on their cooperative activities with State and local agencies, research institutions, and industrial organizations. The general subject area of each report is indicated by the letters that appear in the publication number; the indicators are

AP - Air Pollution

RH - Radiological Health

UIH - Urban and Industrial Health

Reports in the SERIES will be distributed to requesters, as supplies permit. Requests for reports in the AP SERIES should be directed to the Air Pollution Technical Information Center, National Center for Air Pollution Control, Public Health Service, U. S. Department of Health, Education, and Welfare, Washington, D. C. 20201.

Public Health Service Publication No. 999-AP-4

# CONTENTS


| | Page |
|---|---|
| ABSTRACT | v |
| INTRODUCTION | 1 |
| DESCRIPTION OF THE KRAFT PULPING PROCESS | 2 |
| SURVEY OF PULP MILL PROCESS EMISSIONS | 4 |
| Digester Blow System Emissions | 4 |
| Smelt Tank Emissions | 5 |
| Lime Kiln Emissions | 5 |
| Recovery Furnace Emissions | 5 |
| Multiple Effect Evaporator Emissions | 6 |
| MEASURES FOR CONTROLLING EMISSIONS | 7 |
| Control of Particulate Emissions | 7 |
| Control of Gaseous Emissions | 8 |
| INDEX TO BIBLIOGRAPHY | 9 |
| ANNOTATED BIBLIOGRAPHY | 15 |
| SELECTED PAPERS | 77 |

# ABSTRACT

Since the first kraft mill came into existence in 1891, the potential odor problem has been well recognized. Accordingly, a great deal of literature has been published describing practical and theoretical work in the field of kraft mill odor control. Some progress has been made, but even today most kraft mills are faced with serious problems of atmospheric pollution.

The following work provides an annotated bibliography of articles concerning measurement and control of kraft mill air-borne pollution currently available in the literature. It is the authors' intention that this should provide a retrospective view of what has been accomplished and should form a sound basis for further work in the field. In addition to 154 abstracts, this bibliography contains a description of the kraft pulping process, a survey of mill emissions, and a consideration of control measures.

# AIR POLLUTION AND THE KRAFT PULPING INDUSTRY

## INTRODUCTION

Cellulose, produced by pulping processes, is one of the most versatile and useful products of modern technology.

The production of pulp in the United States amounted to almost 22 million tons in 1957. This total was produced by the following processes: Sulfate (kraft), 12 million tons; mechanical, 3 million tons; sulfite, 2½ million tons; soda, ½ million tons; all others, 4 million tons.

Thus, over half of the pulp produced in the United States comes from sulfate, or kraft, processing.

When the first kraft mill was built in 1891, the operators were well aware of the air pollution problem involved. The first papers concerning kraft mill odor problems appeared in the literature around 1900. Today, despite the progress in recent years, most kraft pulp mills are still living with this problem.

The locations of kraft mills in the United States, and their capacities are shown in Figure 1 and Table 1, respectively.

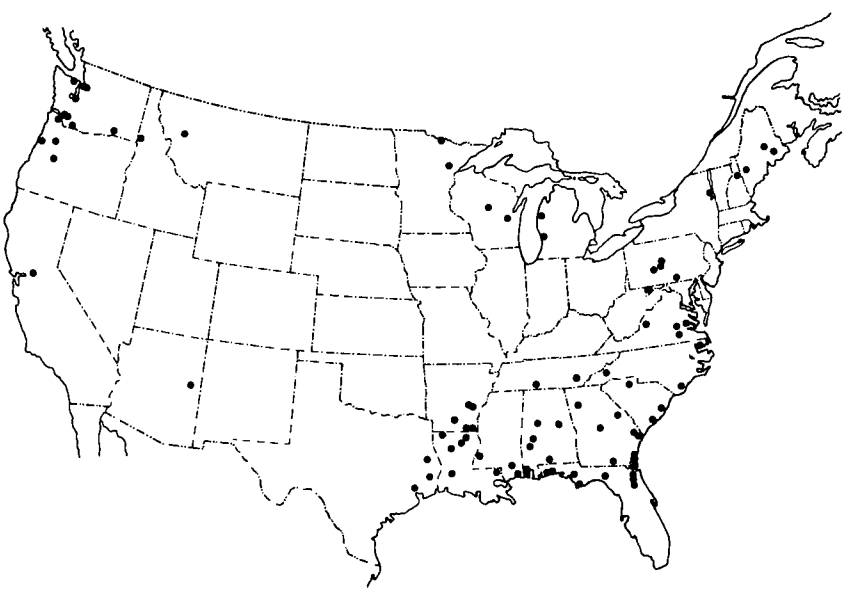

Figure 1. Location of sulfate (kraft) mills in the United States.

Table 1. SULFATE PULP MILLS IN THE UNITED STATES

(The figure after the city name indicates production in tons of pulp per day)

ALABAMA (7)
- Brewton 300
- Coosa Pines 300
- Demopolis 350
- Tuscaloosa 500
- Mobile 1,015
- Mobile 550
- Naheola 310

ARIZONA (1)
- Snowflake 150

ARKANSAS (5)
- Camden 615
- Crossett 575
- Crossett 80
- Pine Bluff 170
- Pine Bluff 745

CALIFORNIA (1)
- Antioch 215

FLORIDA (9)
- Fernandina Beach 650
- Foley 800
- Jacksonville 500
- Jacksonville 1,370
- Palatka 810
- Panama City 1,620
- Pensacola 580
- Pensacola 450
- Port St Joe 1,200

GEORGIA (8)
- Augusta 350
- Brunswick 525
- Macon 700
- Rome 725
- St Marys 800
- Savannah 2,100
- Valdosta 700
- Port Wentworth 625

IDAHO (1)
- Lewiston 500

LOUISIANA (6)
- Bastrop 580
- Bogalusa 1,180
- Elizabeth 240
- Hodge 500
- Springhill 150
- West Monroe

MAINE (3)
- Lincoln 180
- Old Town 140
- Rumford 350

MARYLAND (1)
- Luke 515

MICHIGAN (2)
- Filer City 165
- Muskegon 125

MINNESOTA (2)
- Cloquet 130
- International Falls 125

MISSISSIPPI (3)
- Lumberton 100
- Moss Point 650
- Natchez 900

MONTANA (1)
- Missoula

NEW HAMPSHIRE (1)
- Berlin 450

NEW YORK (1)
- Ticonderoga 150

NORTH CAROLINA (4)
- Acme 700
- Canton 930
- Plymouth 950
- Roanoke Rapids 650

OREGON (4)
- Albany 250
- St Helens 375
- Springfield 400
- Toledo 600

PENNSYLVANIA (4)
- Roaring Spring 120
- Spring Grove 190
- Tyrone 140'
- Williamsburg 85

SOUTH CAROLINA (3)
- Catawba 400
- Charleston 1,250
- Georgetown 1,455

TENNESSEE (2)
- Calhoun 450
- Counce 500

TEXAS (3)
- Evadale 360
- Lufkin 300
- Pasadena 670

VIRGINIA (4)
- Covington 660
- Franklin 690
- Hopewell 800
- West Point 600

WASHINGTON (8)
- Camas 700
- Everett 80
- Everett 325
- Longview 825
- Longview 575
- Port Townsend 420
- Tacoma 400
- Wallula 200

WISCONSIN (2)
- Kaukauna 250
- Mosinee 165

# DESCRIPTION OF THE KRAFT PULPING PROCESS

Pulp wood can be considered to have two basic components, cellulose and lignin. The fibers of cellulose, from which the pulp is made, are bound together in the wood owing to the presence of the lignin. To render cellulose usable for pulp manufacture, any chemical pulping process must first remove the lignin.

The major discriminating factor of the kraft process (Figure 2) lies in its utilization of a solution of sodium sulfide and sodium hydroxide in water to dissolve lignin from wood. This liquor is mixed with wood chips in a large, upright pressure vessel, known as a digester, and cooked for about 3 hours with steam at a gauge pressure of approximately 110 pounds per square inch.

During the cooking period the digester is relieved periodically to reduce the pressure build-up of various gases within.

When cooking is completed, the bottom of the digester is suddenly opened, and its contents forced into the blow tank. Here the major portion of the spent cooking liquor containing the dissolved lignin is drained and the pulp enters the initial stage of washing. From the blow tank the pulp passes through the knotter, which removes the chunks of wood not broken down during cooking. It then proceeds through various intermittent stages of washing and bleaching, after which it is pressed and dried into the finished product.

A major reason for the economic success of this type of pulping operation lies in its ability to recover most of the chemicals from the spent

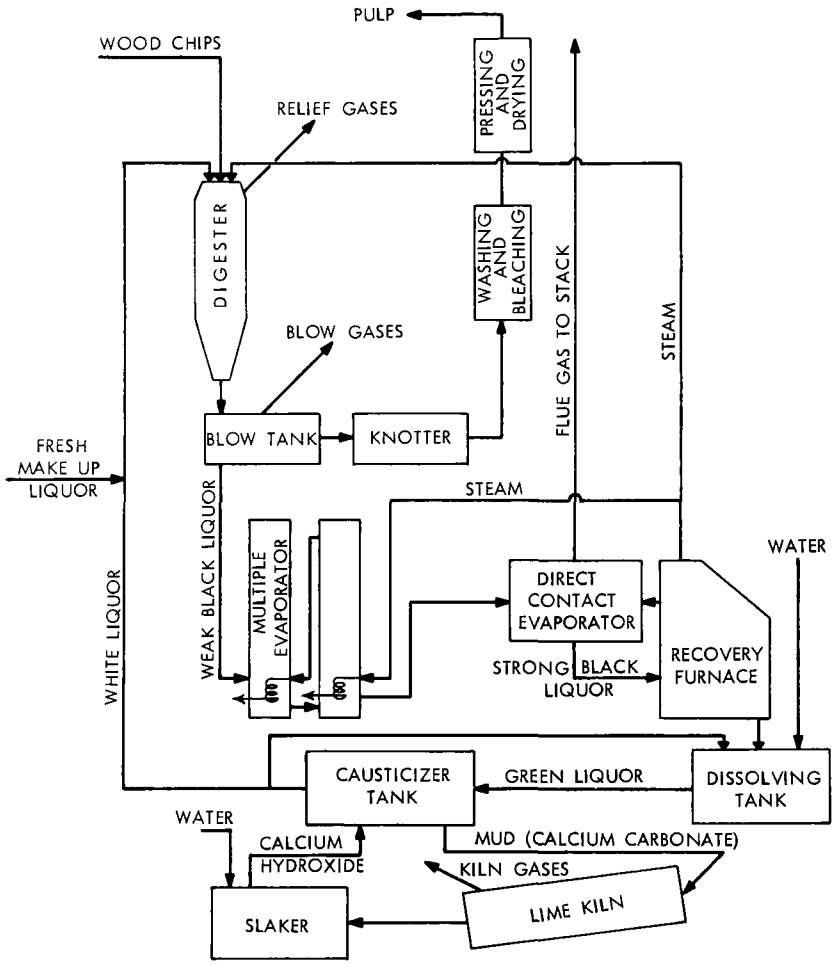


Figure 2. The kraft pulping process.

cooking liquor for re-use in subsequent cooks. The recovery process is initiated by introducing the spent ("black") liquor from the blow tank into a multiple effect evaporator where it is concentrated into a mixture with a density of about 25° Baumé. The spent (or black) liquor, is further concentrated in a direct contact evaporator, which, by bringing the liquor into direct contact with recovery furnace flue gases, evaporates an additional portion of water.

The combustible, concentrated, black liquor thus produced is then forced through spray nozzles into the recovery furnace, where it is burned to recover a portion of the heat by oxidation of the dissolved lignin and to conserve the inorganic chemicals, which fall to the floor of the furnace in a molten state.

The resulting melt, which consists mainly of a mixture of sodium sulfide and sodium carbonate, is withdrawn from the furnace and dissolved with water and weak liquor from the causticizing plant. The "green liquor" thus produced is pumped into a causticizer, where the sodium carbonate is converted to sodium hydroxide by the addition of calcium hydroxide. The calcium carbonate resulting from the reaction precipitates from the solution and is collected and introduced into a lime kiln, where it is converted to calcium oxide. This is slaked to produce calcium hydroxide for further use in the causticizer.

The effluent solution produced by the causticizing reaction with the green liquor contains sodium hydroxide, sodium sulfide, and smaller quantities of sodium sulfate and sodium carbonate. Known as "white liquor," this solution is withdrawn and re-used in the digestion process.

# SURVEY OF PULP MILL PROCESS EMISSIONS

## Digester Blow System Emissions

The major pollutants from the blow system(Tables 2 and 3)are organic mercaptans and sulfides with lesser amounts of hydrogen sulfide. Sulfur dioxide and particulates are negligible.*

Table 2. BLOW SYSTEM EMISSIONS PRIOR TO TREATMENT

| Digester cooking conditions | Hydrogen sulfide | Methyl mercaptan | Dimethyl sulfide | Ref |
|---|---|---|---|---|
| | lb /ton dry pulp | | | |
| Cook time 3.75 hr<br>Temp 172 °C<br>Sulfidity 22% | 0.45 | 2.50 | 1.37 | 66 |
| Unknown | 0 to 0.10 | 0 to 0.88 | 0.01 to 0.94 | 18 |

Table 3. GAS CONCENTRATIONS IN BLOW SYSTEM EMISSIONS

| Gas | Concentration, mg per liter |
|---|---|
| Hydrogen sulfide | 0 to 0.4 |
| Methyl mercaptan | 3 to 72 |
| Dimethyl sulfide | 0.5 to 35 |
| Dimethyl disulfide | 0.2 |
| Sulfur dioxide | 0 |

* The values in Tables 2 through 8 were calculated from data in the Bibliography and from the forthcoming PHS Report, The Study of Air Pollution in the Interstate Region of Lewiston, Idaho, and Clarkston, Washington. These are rough estimates and not typical of a particular mill.

# Smelt Tank Emissions

Emissions from the smelt tank (Table 4) are primarily particulate. Uncontrolled particulate emissions may run about 20 pounds per ton of pulp. Use of a simple water spray may reduce this figure to 5 pounds per ton of pulp, while a mesh demister may further reduce this to 1 or 2 pounds per ton of pulp. Thus an average 600 tons per day mill may emit 6 tons of particulate if uncontrolled.

Table 4. PARTICULATE EMISSIONS FROM SMELT DISSOLVER TANKS

| Influent particulate loadings, ton/day | Efficiency of mesh demister | Effluent particulate emissions, tons/day |
|---|---|---|
| 5.6 | 80% | 1.1 |

# Lime Kiln Emissions

The lime kiln is a major source of particulate emissions (Table 5); gaseous emissions are not so pronounced. Particulate emissions reportedly range from 5 to over 15 grains per cubic foot. This may represent up to 10 or more tons emitted per day. Use of scrubbers reduces these emissions to about 0.5 grain per cubic foot, roughly 1 ton per day.

Table 5. PARTICULATE EMISSIONS FROM LIME KILNS

| Particle concentration, grains/$ft^3$ | Particulate emissions, lb /ton dry pulp |
|---|---|
| 0.86 | 18.7 |

# Recovery Furnace Emissions

The recovery furnace is a major source of particulate and gaseous pollution (Tables 6 and 7).

Table 6. HYDROGEN SULFIDE AND PARTICULATE EMISSIONS FROM RECOVERY FURNACES

| Pollutant generated by furnace (with primary stack gas scrubber), lb /ton dry pulp | Final emissions with venturi scrubber, lb /ton dry pulp | Final emissions with electric precipitator, lb /ton dry pulp |
|---|---|---|
| Hydrogen sulfide: 3.59 | 0.72 | 3.59 |
| Particulates: 150 | 12 | 7 |

Electrostatic precipitators remove 85 to 97 percent of the particulate. Venturi scrubbers remove 60 to 95 percent of the particulate and some of the gases.

Table 7. RECOVERY FURNACE EMISSIONS

| Pollutant: | Emission: |
|---|---|
| Particulate | 10 to 40 tons / day |
| Particulate | 100 to 400 lb /ton of pulp |
| Hydrogen sulfide | 130 to 935 ppm |
| Methyl mercaptan | 60 to 1,400 ppm |
| Dimethyl sulfide | 125 ppm |
| Sulfur dioxide | 1 to 350 ppm |

# Multiple Effect Evaporator Emissions

Table 8. EMISSIONS FROM MULTIPLE EFFECT EVAPORATORS WITH AND WITHOUT PREVIOUS BLACK LIQUOR OXIDATION

| Pollutant | Potential emissions, lb /ton dry pulp | Oxidation tower efficiency | Emissions from evaporators, lb /ton dry pulp |
|---|---|---|---|
| Hydrogen sulfide | 1.2 | 95 to 100% | 0 to 0.06 |
| Methyl mercaptan | 0.04 | 95% | 0.003 |
| Dimethyl sulfide | | 10% | |

# MEASURES FOR CONTROLLING EMISSIONS

## Control of Particulate Emissions

Attempts to curb the smoke and odors issuing from pulp mills have been nearly as long lived as the kraft process itself. This is exemplified by an article in a 1922 journal describing a process wherein the smoke from the mill is passed through a pile of wood chips or straw to remove both the odors and the particulate matter.

Subsequent developments have included more refined techniques of collection. One such technique, **electrostatic precipitation,** utilizes an electric field to effect the collection of charged, air-borne, particulate matter. Particulates can be removed from gaseous streams with efficiencies of greater than 95 percent with such equipment.

The **cyclone** is another unit of equipment successfully applied to remove particulate matter from effluent streams, though it is generally used in conjunction with other removal equipment because of its low efficiency for small particulates. Cyclones effect a centrifugal force on suspended particles by causing the carrier gas to spin in a tight, helical path. The particles move outward, hit the peripheral walls of the unit, and fall out of the stream into a hopper below.

Various modifications of the cyclone have been put into successful operation. One utilizes a continuous spray dispersed inside the unit to increase efficiency by impinging air-borne particles on liquid droplets. These units, known as wet cyclones, have frequently been used in kraft mills as flue gas scrubbers. Here black liquor is dispersed as the scrubbing agent, and simultaneously concentrated by evaporation. The efficiencies of cyclones vary over a wide range and are considerably lower than those normally expected from electrostatic precipitators.

**Filtration** provides a third effective means of particulate removal, but has been used only to a limited extent in kraft mill air pollution control. Particulate emissions from lime kiln and dissolver stacks have been effectively reduced, however, by use of mesh demisters, which are screen filters located inside the stacks.

**Venturi scrubbers** constitute a fourth type of removal equipment. These are employed mainly in cleaning the voluminous gas streams issuing from the furnaces and lime kiln. Scrubbers of this type force the gases at high velocity through the venturi, simultaneously injecting a spray of scrubbing liquor at the throat. Particles of suspended matter are impinged upon the spray droplets, which are in turn collected by a cyclone at the outlet of the unit. Standard venturi scrubbers may attain efficiencies of 85 percent,

and recently developed, steam-atomized types have been observed capable of efficiencies slightly higher.

The major disadvantage of the venturi scrubber is its high power requirement. This is offset somewhat by its ability to recover a portion of the heat and odorous gases from effluent streams as well as by its lower maintenance requirements. Electrostatic precipitators, on the other hand, require little power for their operation and have slightly higher efficiencies. They are ineffective as gas removers, however, and require greater "down" times for maintenance.

Installation of collection equipment is made attractive to pulp mill owners from an economic as well as from an air pollution control standpoint. It has been estimated that the amount of particulate salts issuing from the stacks is about 150 pounds per ton of pulp produced. For a 100-ton-per-day mill, a collection system operating with 90 percent efficiency will save approximately $200 per day by recovering these chemicals—a substantial amount, which should rapidly pay off any reasonable investment in such equipment.

## Control of Gaseous Emissions

Owing to the high virulence of trace quantities of pulp mill pollutant gases as well as to their capability of issuing from many points within a mill, the control of gaseous emissions has been recognized as a much greater problem than that of air-borne particulate matter. Attempts to solve this problem have generally followed one of two paths: (1) Chemical conversion of odorous sulfur compounds into ones that are not so objectionable, and (2) retention of sulfur compounds within the system.

Among the first developments to become popular in commercial application was the **black liquor oxidation process.** This involves oxidation of the sulfur compounds in weak black liquor by contacting it with air prior to its admission to the multiple effect evaporators. Oxidation effects a conversion to less volatile compounds, which are less odorous and have less tendency to escape into the atmosphere.

It is generally accepted that the oxidation process reduces the odor of evaporator gases and retains in the black liquor the sulfur compounds that would otherwise be emitted to the atmosphere. This larger concentration of sulfur compounds results, however, in a tendency for their emission from the recovery furnace stacks upon combustion of the black liquor. As a corollary of odor reduction by black liquor oxidation, it is important, therefore, to exercise rigid control over furnace operating conditions to minimize emission of reduced sulfur compounds.

Oxidation of black liquor has several economic implications, one of which is the retention of sulfur in the recovery system and a resulting reduction in the amount of elemental sulfur needed to maintain a constant sulfidity in the cooking liquor. Of much greater importance, however, are the markedly reduced corrosion rates found characteristic of evaporation equipment processing oxidized black liquor.

Another method of mitigating odors from sulfur gases is simply to collect these gases and dispose of them by **burning.** The main problem with this method arises from tremendous periodical surges of gas that occur when the digesters are blown. One company has attempted to solve this

problem by collecting the gases in a large spherical surge tank that evens the flow and supplies a continuous stream to the furnace for burning.

**Absorption of sulfur gases in liquids** has been of limited use, especially for handling gases from the evaporators. One such unit, called an "Inka Tower," utilizes a sodium hydroxide solution as an absorbent. This method has been found effective in deodorizing noncondensable gases from the multiple effect evaporators.

**Oxidation of exhaust gases by catalytic methods** has also been proposed, but its use has been limited. Processes designed for catalytic oxidation may be extensively used in the future.

More dubious methods of controlling pulp mill odors have been those of **odor masking and counteraction,** which involve introduction of a specific substance at a selected point within a mill for dispersal with the mill gases, to render them less noticeable. These methods are attractive to mill owners because they are simple and inexpensive to incorporate into any pulp mill, and are not affected by any basic changes in the process.

Results of odor masking and counteraction have been varied and difficult to evaluate. These methods also have the disadvantage that, in most cases, nothing is done to eliminate the noisome gases, and any adverse effect, other than odor, will persist.

# INDEX TO BIBLIOGRAPHY

The following index serves as a key to the Annotated Bibliography. The numbers refer to the correspondingly numbered abstract in the Bibliography.

For example, for collection and combustion as corrective measures for digester relief and blow gases, the reader is referred to abstract 35 (among others), which is an article by A. A. Coleman on "The Combustion of Noncondensable Blow and Relief Gases in the Lime Kiln."

**Digester Relief and Blow Gases**

Major pollutants: hydrogen sulfide, methyl mercaptan, dimethyl sulfide, dimethyl disulfide.

Corrective measures:

Collection and combustion

8, 11, 12, 35, 52, 54, 66, 95

Catalytic oxidation

83, 105, 106

Oxidation in liquor oxidation tower

13, 26, 71, 103, 107, 124

Odor masking and counteraction

63, 64, 85, 89, 116, 127, 128, 130, 132, 138, 147, 154

Liquid absorption

64

**Multiple Effect Evaporator Gases**

Major pollutants: hydrogen sulfide, methyl mercaptan, dimethyl sulfide, dimethyl disulfide.

Corrective measures:

Black liquor oxidation

5, 10, 11, 13, 16, 19, 22, 23, 26, 28, 31, 33, 37, 38, 39, 44, 46, 53, 54, 59, 71, 77, 79, 81, 95, 102, 105, 121, 130, 131, 141, 142, 144, 145, 146, 148, 153

Collection and combustion

8, 11, 12, 35, 52, 54, 66, 95

Liquid absorption

54

Catalytic oxidation
54, 84, 105, 106
Odor masking and counteraction
86, 90, 116, 127, 128, 130, 132, 138, 147, 154
Integrated operations
129, 131

**Recovery Furnace Stack Gases**

Major pollutants:

I. Particulate: fly ash, sodium sulfide, sodium sulfate, sodium oxide, sodium carbonate.

Corrective measures:
Electrostatic precipitators
6, 9, 10, 14, 24, 50, 61, 81, 103, 104
Cyclones
43, 81, 87, 114, 124
Venturi scrubbers
29, 41, 43, 45, 48, 81, 87, 88, 101, 114, 136, 137
Condensation methods
65
Integrated operations
5, 7, 40, 58, 101, 124
Spray scrubbers
66, 81, 83, 114

II. Gaseous: hydrogen sulfide, methyl mercaptan, dimethyl sulfide, dimethyl disulfide.

Corrective measures:
Air oxidation
65, 109
Cyclone scrubbers
87
Venturi scrubbers
29, 87, 88, 136, 137
Integrated operations
58, 62, 124, 129
Odor masking and counteraction
62, 63, 86, 89, 114, 127, 128, 130, 132, 138, 147, 154
Spray scrubbers
66, 83
Catalytic oxidation
84, 105,

**Lime Kiln Stack Gases**

Major pollutants: calcium carbonate.

Corrective measures:
Electrostatic precipitators
81, 120,
Venturi scrubbers
47, 75, 81, 114,
Cyclones
14, 81, 90, 114,
Wet scrubbers
90, 114,

**Dissolver Vent Gases**
Major pollutants: sodium carbonate, sodium sulfide.
Corrective measures:
Filtration
20,
Integrated operations
101,

# ANNOTATED

# BIBLIOGRAPHY

# ANNOTATED

# BIBLIOGRAPHY


1. Adams, D. F. and R. K. Koppe: **Application of instrumentation to pulp mill atmospheric discharges.** *TAPPI*, 41: 366-377. July 1958. Many different types of instrumentation are currently available for the quantitative and qualitative study of atmospheric pollutants. The importance of obtaining quantitative information concerning atmospheric discharges from the pulping process is currently being realized. This report describes the available instrumentation applicable to the study of pulping emissions, including instruments for (1) collection of field and source samples, (2) laboratory analysis of collected samples, and (3) automatic, continuous analysis and recording. Instruments having immediate or potential application in pollution studies are critically reviewed. A new, versatile, automatic analyzer with potential application in the analysis of malodorous gases in parts per billion concentration range is described. A preliminary report on the development of a gas-liquid chromatographic procedure for the separation of mixtures of malodorous sulfur-containing compounds is included plus 62 references

2. Adams, D. F. and R. K. Koppe. **Gas chromatographic analysis of hydrogen sulfide, sulfur dioxide, mercaptans, and alkyl sulfides and disulfides.** *TAPPI*, 42: 601-605. (1959). In view of analytical difficulties arising from chemical similarities among sulfur compounds commonly found in pulp mill stream samples, a technique based solely on physical properties appears desirable. This article presents such a method, which employs a chromatographic determination to analyze for volatile sulfur gases. This method, with adequate column packings and carrier solvents, results in highly specific analyses with little interference from other compounds.

3. Adams, D. F., R. K. Koppe, and D. M. Jungroth: **Adsorption sampling and gas chromatographic analysis of sulfur compounds in waste process gases.** TAPPI, 43:602-608. June 1960. A new procedure for source sampling and analysis of malodorous, sulfur-containing gases from the kraft pulping process has been developed. The pollutants are adsorbed and/or condensed on activated silica gel at minus 78.5 $^{o}$C, desorbed under conditions of heat and vacuum, trapped at minus 195.8 $^{o}$C, and transferred onto a gas-liquid chromatographic column for analysis in a conventional manner by use of a rising column temperature technique. Water vapor, more polar than the malodorous vapors, must be preferentially removed from the source sample prior to adsorption to prevent chromatographic elution of less polar compounds. The major portion of the water is

eliminated by condensation at 0°C, and additional water vapor is subsequently removed on a solid desiccant, such as anhydrous calcium sulfate.

4. Anderson, E.: **Some gas cleaning problems in pulp and paper mills.** *Pacific Pulp and Paper Ind.*, 13:23-26. Jan. 1939. Problems and methods of cleaning air-borne effluent streams are discussed. Emphasis is placed upon Cottrell precipitators for particulate collection. A method of destroying odorous gases by passing them through an oxidation heat exchange tower is described.

5. Anon: **The B & W Tomlinson chemical and heat recovery process.** *Paper Mill News*, 69:98-99. Nov. 16, 1946. A process is described that oxidizes weak black liquor to eliminate odorous fumes. The stabilized liquor is further utilized in a cyclonic evaporator to entrain fumes of sodium salts from the recovery furnace. Flow chart included.

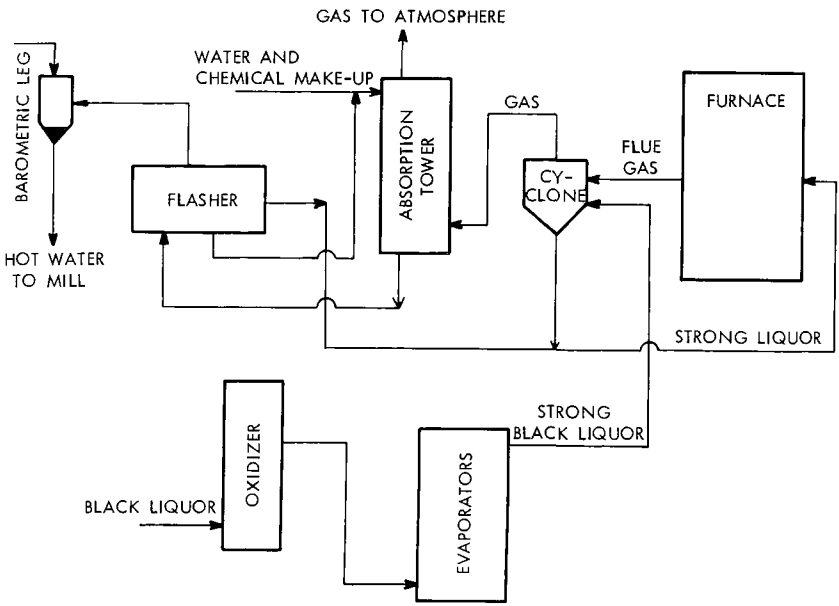


Figure 3. Schematic flow diagram of chemical and heat recovery process.

6. Anon: **Five precipitators at Union Bag to eliminate odor and smoke.** *Paper Mill News*, 69:7. Aug. 10, 1946. An installation of the largest series of electrostatic precipitator units in the history of the pulp and paper industry is being completed at the Union Bag and Paper Corporation's Savannah plant. These units are expected to eliminate practically all the smoke and reduce odors to a minimum. Cost of the installation was $500,000.

7. Anon: **How Mead eliminated recovery stack snow at Kingsport.** *Paper Trade J.*, 141:48-50. Oct. 7, 1957. Since installing recovery

furnaces, the Kingsport plant has been plagued with the problem of soda ash "snow" rising from their stacks and falling on the nearby business district. This fallout occurred in spite of the electrostatic precipitator, which was about 90 percent effective in recovering ash particles. To combat this problem, a fog scrubber was purchased that was highly successful in eliminating snow when placed in series following the precipitator. With this unit, an 88 percent efficiency has been obtained at the expense of only a 0.75-inch $H_2O$ pressure drop. This also enables the carbonate to be reclaimed. This scrubber has been in operation since 1956, and no snow problem has arisen since that time.

8. Anon: **How Weyerhaeuser controls kraft odor with the vaporsphere.** *Paper Trade J.*, 139:12-13. Jan. 3, 1955. Twenty-five-foot spheres are being used in two of Weyerhaeuser's plants to catch noncondensable gases from the kraft process. These two units, located at Springfield, Oregon, and Everett, Washington, are said to be at least 90 percent effective in removing odorous gases. Their purpose is to collect the gases and emit them continuously for burning or chlorination.

9. Anon: **Koppers precipitator installed to control air pollution.** *Paper Mill News*, 81:28. June 9, 1958. The St. Regis Paper Company's Jacksonville Mill has added a third electrostatic precipitator to their recovery furnace system. The combination of the new and older units will effect a 112-ton-per-day salt cake recovery.

10. Anon: **A new board mill - Springfield sets new standards.** *Pulp & Paper Mag.*, 23:42. Nov. 1949. A new 150-ton-per-day kraft mill constructed by Weyerhaeuser in Springfield, Oregon, has incorporated several measures to utilize materials further and decrease pollution. Among these is a Bergstrom oxidation tower, which removes a large portion of the malodorous gases. Here 25,000 cfm of stack gases circulate countercurrently to 250 gallons per minute of condensate. The tower is 10 feet in diameter and 28 feet high. It is packed with 4-inch cross-partition rings. The recovery stack gases are passed through an electrostatic precipitator prior to expulsion into the atmosphere. The resulting ash is conveyed dry into the salt cake-mixing tank. Combination of these with other operations helps the new mill to utilize a higher percentage of the raw materials and reduce the emission of pollutants to the atmosphere.

11. Anon: **New system controls dust and odor.** *Pulp & Paper Mag.*, 33:77. 1959. A gas washer, a black liquor oxidation tower, a gas holder, and a high temperature furnace have been added to the air pollution control equipment of the San Joaquin Pulp Mill. This equipment is designed to process 14,000 cubic feet of gas per minute. Its cost was $600,000.

12. Anon: **A new way to reduce kraft odors.** *Pulp & Paper Mag.*, 29:122. Mar. 1955. Weyerhaeuser has developed a new type of gas holder that collects odorous vapors arising from the kraft process and emits them in a continuous stream for disposal. Called the "vaporsphere," it consists of a 27-foot steel sphere, inside of which is mounted a gas-tight diaphragm. The diaphragm rises and falls with the rate of gas flow and thereby evens out the tremendous surges of gas that arise from the blowing of digesters. From the vaporsphere, the gases are transferred to a furnace and burned. Weyerhaeuser also

operates a black liquor oxidation process that reduces odors from the evaporation system. Besides being effective in odor control, this system has economized the sulfur balance of the process, making addition of elemental sulfur unnecessary.

13. Anon: **Odor abatement in pulp mills.** *Pulp & Paper Mag. Can.*, 53:108. Dec. 1952. In 1951 a large-scale experiment was carried out in the Bloedel, Stewart, and Welch pulp mill at Port Alberni, B. C. A black liquor pilot oxidation unit was constructed and tested, while 15,000 gallons of oxidized black liquor were being continuously accumulated. This liquor was fed into the recovery furnace, and the effluent gases were analyzed. Studies indicated that a substantial decrease in odor resulted from the substitution of the oxidized liquor. Also encouraging were the results of studies indicating that digester relief gases could be rendered innocuous by absorption in the oxidation tower. Plans are currently under way for installation of a full-scale oxidation unit.

14. Anon: **We don't have all the answers.** *Air Repair,* 2 :52-59. Nov. 1952. The over-all problem confronting a pulp mill consists of two general parts: the fly ash carried in the flue gas from the chemical recovery furnaces, and odors emanating principally from the wood digestion system. In the cook, the primary reaction is between the cooking chemicals and the lignin. The product is soluble in water, and is washed from the fibers and sent to the recovery furnace. Electrostatic precipitation was found to remove 90 to 95 percent of recovery furnace fly ash. Another dust source is the lime-producing system. Champion Paper and Fibre Company (Pasadena, Texas) has installed a rotoclone scrubber on their lime kiln at a cost of $40,000. To combat the odor problem, relief gases are vented and condensed. The noncondensable gases are destroyed by burning. Reaction products of digestion contain some $H_2S$, $Na_2S$, and mercaptans. $Na_2S$ will yield $H_2S$ in presence of an acid. If $Na_2S$ is converted to $Na_2SO_4$ by oxidation it does not form $H_2S$. For this reason Champion oxidizes their spent liquor. Champion uses scrubbers on vapors that distill off from the multiple effect evaporators. This article contains general statements concerning air pollution by M. D. May of the Champion Paper and Fibre Company at a public hearing in Houston, Texas.

15. Anon: **West coast steps up water, air controls.** *Pulp & Paper Mag.*, 35:9. May 1, 1961. Portland, Oregon — This session has produced increased activity in the legislation of controls over air and water pollution. It appears that the state sanitary authority will have more power and will have the authority to specify to cities and industry what must be done, but shall not specify the means to these ends. The demands specified by these committees are believed by some to be so stringent as to make the resulting costs exceedingly high.

16. Anon: **Western kraft deodorizing mill.** *Paper Mill News,* 83:28 Sept. 12, 1960. The Western Kraft Corporation has recently installed a Collins black liquor oxidation unit at their kraft mill in Albany, Oregon. It is too early to estimate accurately the reduction in pollution potential resulting from the tower, but every indication is given that a marked improvement has taken place. The Albany Mill is the fifth establishment to employ this type of tower. The others are at Thilmany, Wisconsin; Bathurst, New Brunswick; Jacksonville,

Florida; and Longview, Washington. The Albany tower is, however, designed for greater oxidation capacity per ton of pulp than any of its predecessors.

17. Bergstrom, H.: **Pollution of water and air by sulfate mills.** *Pulp & Paper Mag. Can.*, 54:135-140. Nov. 1953. A discussion is given concerning the evolution of odorous substances and their control in kraft pulp mill operations. Poisoning of mill personnel from effluent gases has been a problem so serious as to cause death in some instances. The following table indicates the concentrations of various compounds that could quickly cause death to humans.

Table 9. RELATIVE VIRULENCE OF PULP MILL GASES

| Gas | mg/ml | Volume, % | Relative virulence |
|---|---|---|---|
| Hydrogen sulfide | 1.4 | 0.1 | 1 |
| Dimethyl disulfide | 20 | 0.5 | 1:14 |
| Methyl mercaptan | 20 | 1 | 1:14 |
| Dimethyl sulfide | 140 | 5.4 | 1:100 |

The figures in this table can be better appreciated when it is noted that hydrogen sulfide has about the same toxicity as hydrogen cyanide. The most practicable way of neutralizing these substances is by burning them. This may be done by conveying the vapors into the furnace.

Examples of the quantity and concentration of volatile sulfur compounds produced by a sulfate pulp mill are shown in the following table.

Table 10. QUANTITY AND CONCENTRATION OF VOLATILE SULFUR COMPOUNDS PRODUCED BY A SULFATE MILL

| Source | Hydrogen sulfide, | Mercaptans, | Sulfides, |
|---|---|---|---|
| | mg per liter | | |
| Digester | | | |
| condensate | 131 | 1,136 | 2,288 |
| gases | 0 | 71.7 | 34.1 |
| Diffusers | | | |
| condensate | 230 | 333 | 0 |
| gases | 11.3 | 405 | 503 |
| Evaporators | | | |
| dry distillation | 76.4 | 3.5 | 0 |
| in smelter | 1.3 | 2.65 | 0.32 |

18. Bergstrom, H., and K. G. Trobeck: **Sulfur losses in the production of sulfate cellulose.** *Translated from Svensk Papper*, 48(3):49-54. Feb. 15, 1945, by the Institute of Paper Chemistry, Appleton, Wis. The losses of sulfur in the manufacture of sulfate pulp occur mainly in the condensate; in noncondensable gases from the digester, diffusers, and multiple effect evaporators; and from the recovery furnace gases. Several investigations to determine the sulfur losses at a given moment in the manufacture of sulfate pulp are reported.

19. Bergstrom, H., and K. G. Trobeck: *U. S. Pat. 2,406,581.* **Process of utilizing black liquors.** This process utilizes liquor oxidation and subsequent evaporation to dryness by concentration to 80 or 90 percent solids prior to ejection through a flasher for final drying.

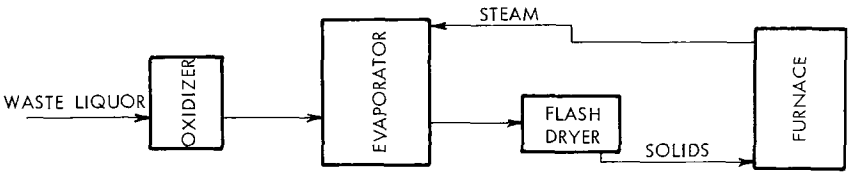


Figure 4. Schematic flow diagram of a process for utilizing black liquor.

20. Bernhardt, A. A., and J. S. Buchanan: **Recovery of dissolver vent stack soda losses.** *TAPPI*, 43:191-A. June 1960. The smelt shatter system at the Nekoosa Mill was troubled with the entrainment of small particles in the air issuing from the dissolver stack. For this reason, the mill installed a collection system consisting of a wire mesh filter situated so that the vent gases pass through the filter medium. The droplets impinge on the mesh, grow, and fall back against the airflow. Cost of the unit was $2,600. Its payback time, based on salt cake recovery was about 6 weeks.

Table 11. COLLECTION OF SODIUM SULFATE BY MEANS OF A MESH FILTER

| | Salt cake loss, lb per ton of pulp | Value, dollars per day |
|---|---|---|
| Before use of mist eliminator | 17.1 | 68 90 |
| After use of mist eliminator | 0.5 | 2 50 |

21. Bialkowsky, H. W., and G. G. DeHaas: **A catalytic oxidation procedure for determining sulfur compounds in kraft mill gases.** *Pulp & Paper Mag. Can.*, 53:99-105. Oct. 1952. Sources of atmospheric sulfur loss from kraft mills are reviewed together with various techniques for analysis of these sources. Among these techniques are the mercury and cadmium salt precipitation methods for differentiating between hydrogen sulfide, methyl mercaptan, and dimethyl sulfide; the bromine oxidation method of Siggia and Edsberg for determining alkyl sulfides and disulfides; and the potentiometric titration method for sulfides and methyl mercaptan. A method for determination of total sulfur and sulfur dioxide is described in detail. This technique employs a quartz tower operating at 1,000 °C for the catalytic oxidation of the sulfur compounds to sulfur dioxide. The sulfur dioxide is further oxidized to sulfur trioxide in a hydrogen peroxide solution. The amount of sulfur present is then determined by resulting changes in pH. A single test requires only about 1 minute, and the apparatus can also be used as a continuous monitoring device.

22. Bialkowsky, H. W., and G. G. DeHaas: **Stabilization of Douglas Fir kraft black liquor.** *Paper Mill News*, 74:14-22. Sept. 1, 1951. Work on the development of equipment and procedures for stabilization of black liquor in an oxidation tower is described. Laboratory data are given describing the surface requirements for complete stabilization at various liquor flow and airflow rates. A full-scale tower was constructed capable of handling 300 gallons of black liquor per minute. This installation has resulted in a marked decrease in hydrogen sulfide losses, which has effected a corresponding decrease in air pollution.

23. Blackerby, L. H.: **Improving liquor oxidation.** *Pulp & Paper Mag.*, 34:84-85. June 1960. William B. West of the Crown Zellerbach Corporation won the 1960 Shipley Award with his paper concerning black liquor oxidation. The author reported increasing oxidation of black liquor at the Elk Falls mill by changing the flow of the two oxidation towers from a parallel to a series arrangement.

24. Blessing, W. H.: **Three unit precipitator saves $1000 daily at Longview.** *Paper Trade J.*, 142:22-23. Sept. 29, 1958. A three-stage, wet-bottom, electric precipitator installed at the Longview, Washington plant has been successfully operating at an efficiency of 96.7 percent. About 38 tons of salt cake per day are recovered, representing a daily saving of over $1,000.

25. Borlew, P. B., and T. A. Pascoe: **Potentiometric determination of sodium sulfide in sulfate pulp black liquor.** *Paper Trade J.*, 122: (10):31. 1946. A high-sodium, glass electrode was developed that was successful in determining the concentrations of inorganic sulfide in black liquor. The half-cell was prepared by mixing sodium hydroxide, ammonia, and water in such amounts that the final solution would contain a volume of 500 milliliters, and concentrations of $NH_4OH$ and NaOH of 0.05 and 1.0 N, respectively. The sodium sulfide content of the black liquor was determined with this apparatus by a potentiometric titration with silver nitrate. This analysis is subject to very little interference from other compounds normally found in black liquor. It exhibits a sharp endpoint, and

represents a substantial improvement over the older, more involved techniques.

26. **British Columbia Research Council discovers new methods to reduce kraft mill odors.** *Paper Trade J.*, 134(2):14. 1952. An apparatus is described that exposes black liquor to air in a concurrent absorption column. Some of the odorous compounds are oxidized, which reduces the air pollution problems arising from the evaporators and the furnace. Gases from the digesters can also be added to the air supply of the unit and be oxidized in the column.

27. British Columbia Research Council: **A manual describing a method for the collection and analysis of pulp mill effluents.** Vancouver 8, Canada. Apr. 1959. In December, 1957, the Mead Corporation of Chillicothe, Ohio, commissioned the British Columbia Research Council to develop a field method for the identification and measurement of the substances responsible for kraft mill odors. One year later, this manual describes a method for the collection and subsequent laboratory analysis of samples of effluents from kraft pulp mills. The method should, with some changes, be applicable also to some other kinds of effluents, such as those, perhaps, from petroleum refineries. The manual was submitted as a Progress Report—the seventh—to the Mead Corporation. They have agreed to make it available to other laboratories. The British Columbia Research Council was happy to arrange for the distribution, and will welcome criticisms and suggestions about the manual. It is to be emphasized that the manual is in fact a Progress Report. The method is not represented as being perfect, but then few entirely new methods are. For example, the behaviour of sulfur dioxide, particularly its influence on the measurement of hydrogen sulfide, has not yet been completely studied. Besides, a smaller field kit would be advantageous; the one described in the manual is, in fact, the first to be constructed. The methods prescribed are, however, the result of extensive laboratory studies on the quantitative recovery of known kraft mill pollutants in the trap train that comprises the sample collection device. These studies will be described in papers to be submitted for publication. The field kit and procedure have been used successfully to sample and analyze all important kraft mill effluents and process streams. Collection of a sample from the duct leading to a lime kiln stack was found to be the one unwieldy operation, because of the large amount of rain continuously forming in the duct. It is believed that this apparatus and method are good starting points for a smaller, modified field kit that would collect a much smaller sample in applying this new, supersensitive instrument to the analysis of malodorous effluents.

The introduction contains two parts:

1. Synopsis. Procedures are described for:
   A. Collection of pollutants from a gaseous stream by use of the field kit,
   B. laboratory concentration of the collected sample by use of fractionation apparatus,
   C. gas chromatographic analysis of the concentrated sample.
2. Time required for collection and analysis of a sample:

It requires 1 full day for one operator to obtain a sample from an effluent or process stream and to complete the analysis for hydrogen sulfide in the field laboratory. This day includes the periods required to transport the field kit to the sampling site, to take the sample, to clean the kit, and transport it back to its original location. It is advisable to examine a new sampling site a day or more before the actual sampling operation. The exact arrangement of sampling tubes and means for their support can be devised. The location of a 110V a-c outlet, the length of extension cord needed, the existence of a suitable hole in the duct for insertion of a sampling tube, and other such matters can be determined. The laboratory concentration and gas chromatographic analysis of a single sample requires about 1½ days, but if several samples are to be analyzed, the time required is about 1 day per sample.

28. . . . . British Columbia Research Council: **A study of the kinetics of oxidation of kraft black liquor.** Vancouver 8, Canada. June 1959. The work described in this report is part of a continuing study to acquire knowledge for the curtailment of kraft pulp mill odors. It deals with the effects of sulfide concentration, temperature, oxygen pressure, and liquor turbulence on the rate of oxidation of black liquor.

29. Callaghan, C. V.: **The venturi scrubber at Bathurst.** *Pulp & Paper Mag. Can.*, 54:106-107. Apr. 1953. A venturi scrubber device is described that has been installed at the Bathurst Mill. The unit processes gases given off from the recovery furnace, issues them into a cyclone, and then emits them into the stack. The scrubbing liquor caught by the cyclone is collected in a slurry tank and mixed with make-up water for re-use as a scrubbing agent. The cost of building the total unit, including the building and chimney, was about $125,000 (Table 12).

30. Cate, F. L.:**Design of chimneys for odor dispersion.** *TAPPI*, 36:225-228. 1953. The design of a chimney is a definite factor in the dispersion of air pollutants, but does not provide a complete solution to the problem. It has been suggested that the concentration of pollutant should vary inversely as the square of distance for locations farther than 50 chimney heights from the stack. It follows, therefore, that distant places may be affected by pollution regardless of the height of the chimney. In view of these facts it must be acknowledged that various collection equipment may be required, in addition to a well-designed stack, for successful abatement of air pollution.

31. Champion Paper, Inc.: **Black liquor oxidation.** *Champion Paper, Inc., Texas Division.* Although black liquor oxidation has become an integral operation of many pulp mills, its use has been limited in southern pine mills owing to excessive foaming of black liquor in these plants. Champion has solved this problem by placing the oxidation tower after the multiple effect evaporators, thereby processing the concentrated black liquor, which has less tendency to foam. The evaporator gases are washed with a weak sodium hydroxide solution, which further reduces sulfur losses to the atmosphere. An additional advantage of oxidizing strong black liquor is that the heat of oxidation serves to evaporate the mixture to a concentration of 2° Baume higher than would otherwise be obtained. Although it has been claimed that oxidation prior to evaporation is the cause of re-

Table 12. PERFORMANCE DATA FOR BATHURST GAS-SCRUBBING UNIT

| | |
|---|---|
| Pulp production | 260 tons per day |
| Gas volume at stack | 58,000 cfm |
| Gas temperature at stack | 165°F |
| Gas temperature into venturi | 290°F |
| Venturi fan motor current | 75 amps |
| Total slurry flow | 53.5 cfm |
| Gas velocity at venturi throat | 275 fps |
| Slurry velocity at jets | 20 to 25 fps |
| Furnace draught, | −0.2 in. $H_2O$ |
| before venturi tube | + 0.5 in. $H_2O$ |
| before throat | −0.8 in. $H_2O$ |
| before cyclone | − 19 in. $H_2O$ |
| after cyclone | −22 in. $H_2O$ |
| after fan | +0.5 in. $H_2O$ |
| Fan power consumption | 325 hp<br>22.4 kw-hr/ton |
| Pump power consumption | 20 hp<br>1.4 kw-hr/ton |
| Slurry pH | 8.5 |
| Slurry temperature | 160°F |
| $Na_2O$ in slurry | 9.9 lb/ft$^3$ |
| Slurry Baumé, hot | 27 to 29 Baumé |
| Salt cake in stack gas | 17,200 lb/day<br>6.6 lb/ton of pulp |
| Salt cake recovered per day | 15.480 lb |
| Recovery | 89.6% |

duced corrosion of evaporator tubes, this was not believed to be the case with Champion's mill. Foam in the oxidation tower is controlled by spraying with heating oil. A foam breaker is being planned to replace this method.

32. Chase, S.: **Control of air pollution at the Champion Paper and Fibre Company.** *Proceedings semi-annual technical meeting. Air Pollution Control Association.* Houston, Texas. Dec. 3, 1956. The Pasadena, Texas, mill of Champion Paper and Fibre Company was started in 1937. The first electrostatic precipitators were made for eliminating or collecting into manageable quantities the air pollutants present. Around 1950 a special department was created solely for the purpose of dealing with problems of stream and air pollution. This paper is a report of Champion's progress in the field of air pollution. Sources and control of solid pollutants and obnoxious odors are discussed. Solids originate from the recovery furnace and the lime kiln. Odors arise from digester relief gases, blow gases, and the recovery furnace. Control equipment and techniques include electrostatic precipitators, water sprays, dust collectors, condensers; combustion, absorption, scrubbing, and odor masking.

33. Anon: **Tower oxidizes odors away.** *Chem. Eng.*, 59(9):232-235. Sept. 1952. The Springfield, Oregon, mill of the Weyerhaeuser Timber Company uses air oxidation of black liquor in a tower to reduce odors and save sulfur. Some observations on the operations are:

Saves 1,000 tons of sulfur per year.

Black liquor: 300 gpm at a sulfur concentration of 3 grams per liter.

Tower: 10 feet in diameter, 30 feet high, packed with 22 feet of 4-inch partition rings; effective surface of 50,000 square feet.

Air: 10 cubic feet per minute for each gpm of liquor.

No foaming problem.

No $H_2S$ found in air leaving the oxidation tower. Complex chemical reaction, but chiefly $Na_2S \rightarrow Na_2S_2O_3$.

Generation of $H_2S$ in evaporators has virtually been eliminated; $H_2S$ is generated in the recovery furnace, and volatile organic sulfur compounds are released from digesters and evaporators.

34. Chipman, W. A.: **Physiological effects of sulfate pulp mill wastes on shellfish.** *Paper Trade J.*, 127:47-49. Sept. 16, 1948. Although it has been demonstrated many times that pulp mill effluents have adverse effects on aquatic life, no work prior to that of this paper had been done on the effects of pulp mill wastes on shellfish. The experimental work reported here involved measurements of the effect of concentration of pulp mill waste on the various normal activities of oysters. It was found that effluent concentrations of 50 ppm were sufficient to depress activity in some cases. The waste material reduced the time that oysters kept their shells open, and decreased their gill pumping and filtration rates. An unsuccessful attempt was made to isolate and determine the toxic compound responsible for the observed physiological effects. It was demonstrated, however, that the toxic compound can be precipitated from the black liquor by salting out .

35. Coleman, A. A.: **The combustion of noncondensable blow and relief gases in the lime kiln.** *TAPPI*, 41(10):166A-168A. Oct. 1958. The burning of digester relief and blow gases in the lime kiln has been

found practical from an operational standpoint. Over-all odor reduction has improved because of reduced downtime of the gas burning system. Maintenance labor for experienced mechanics has been reduced by at least 35 hours per month. A fuel savings of about $450 per month or $0.04 per air-dry ton has been obtained by elimination of the separate, gas-burning furnace. At Weyerhaeuser's Springfield, Oregon, mill, a system for destroying odorous digester relief and blow gases has been in operation for several years. This system is described by DeHaas and Hansen (TAPPI 38:732-738, 1955). The lime kilns are now successfully burning blow and relief gases. The distance from scrubber to kiln is 350 feet. Rupture plates along the gas line will release pressure in case of an explosion; water seals are below the vertical runs of piping. These catch any condensation in the gas line. The system was put into operation in July 1957. Thirty cfm of gas flows from sphere to kiln; dilution to beyond inflammability is 20:1.

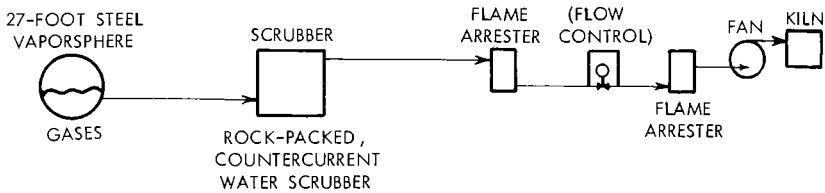


Figure 5. Schematic flow diagram of a system for destroying odorous digester relief and blow gases.

36. Collins, T. T.: **Comparison of methods for determination of sulfide in oxidized sulfate black liquor.** *Paper Trade J.*, 129:29-33. Aug. 25, 1949. Several analytical techniques for determination of sulfide in black liquor were tested, and their relative merits are discussed Experimental difficulties owing to oxidation of the black liquor are bothersome to all techniques, and it is highly desirable to use an analytical method that can be completed in a short period. For this reason, the Borlew-Pascoe method (Abstract 25), which involves a potentiometric nitration with silver nitrate, was considered the most adequate for the studies to be conducted.

37 Collins, T. T., Jr.: **The oxidation of sulfate black liquor.** *Paper Trade J.*, 131: 30-38. Oct. 12, 1950. As a result of extensive pilot plant and laboratory investigations, a full-scale sulfate black liquor oxidation system has been erected and operated at Thilmany so that its effect upon the sulfur balance of the recovery system could be determined. The oxidation unit at Thilmany is not operating at present because an excess of sulfuric acid in the chemical makeup maintains the cooking liquor sulfidity in the desired range. Although a high sulfidity level (33 percent, *TAPPI*) of white liquor was attained, no improvements in pulp quality were observed. A high degree of oxidation of black liquor resulted in the reduction of sulfur loss by more than 90 percent in the vacuum and direct contact evaporators.

The recovery furnace itself, however, proved to be the source of a large quantity of hydrogen sulfide when it was not properly operated and lacked sufficient air. This was true even if the black liquor had been oxidized. As a complement to black liquor oxidation and to a properly designed and operated recovery furnace, the venturi scrubber, with its remarkable ability for absorbing sulfur dioxide, appears satisfactory for reducing both sulfur and sodium losses from the kraft recovery system.

38. Collins, T. T., Jr.: **The oxidation of sulfate black liquor. A review of the literature in two parts.** *Paper Trade J.*, 136: 37-40. Mar. 20, 1953. 136: 19-22. Mar. 27, 1953. In his introduction the author states: "Recently, however, considerable impetus has been given to research in the field of black liquor oxidation and this may be attributed to the pressing odor problem of sulfate mills in some localities. Not only is the odor problem of some consequence, but there seems to be considerable complaint (and some suits) about the effect of sulfate mill recovery fumes in staining house paint. The use of black liquor oxidation systems to reduce the sulfide content of the waste gas is mentioned as a partial solution to the problem." This is a fine review of the literature and patents covering the subject of black liquor oxidation; there are 67 references.

39. Collins, T. T., Jr.: **The oxidation of sulfate black liquor and related problems.** *TAPPI*, 38(8):172A-175A. Aug. 1955. Within the last 5 years there has been considerable interest in the field of sulfate black liquor oxidation. Most of the basic work that has been publicized has been carried on by a few groups of investigators. This work is listed. An article by the same author 2 years before, in which the literature and patents covering the subject of black liquor oxidation were reviewed, is continued. Collins reports that, "the final requirements for a successful scrubber for the fume-heat-sulfur recovery process have now been met for over a year by the use of a black liquor venturi scrubber on a 250-ton furnace at the Thilmany mill at Kaukauna, Wisconsin." Other items discussed in this article include foaming, analysis of black liquor for its sulfide content, beneficial results to the kraft process from oxidation, savings achieved by oxidation, and redesign of the kraft recovery furnace.

40. Collins, T. T., and R. H. Collins: **Recovery of heat and chemicals in sulfate recovery furnace stack gases. Part I.** *Paper Ind.*, 29:1608-11. 1948. **Part II.** Ibid, 1766-71. An extensive literature review is given concerning the quantities of heat and materials lost through stacks of recovery furnaces. The review also considers the various methods of recovery used at the time and appraises their value.

41. Collins, T. T., C. R. Seaborne, and A. W. Anthony: **Removal of salt cake fume from sulfate recovery furnace stack gases by scrubbing.** *Tech. Assoc. Papers*, 30:168-172. 1947. A new apparatus for scrubbing the fume of sodium salts from sulfate or soda furnace stack gases has been developed successfully on a pilot plant scale. The equipment consists essentially of a venturi through which waste gases going to the stack pass at high velocity. At the same time, recirculated water injected into the constriction is atomized by the energy of the gases under extremely turbulent conditions existing in the throat and is then removed in a dry cyclone following the

venturi atomizer. Efficiencies of sodium removal as high as 99 percent have been attained by a combination consisting of the venturi atomizer followed by the conventional Pease-Anthony scrubber, instead of a cyclone. The combination of venturi atomizer followed by a dry cyclone, called the venturi scrubber, has given 85 to 94 percent sodium recovery on a pilot plant scale with an estimated power consumption for large-scale operation of approximately 43 killowatt-hours per ton of pulp. Because of the easily attainable high efficiency, low first cost, and simplicity of operation of the venturi scrubber, the addition of any other equipment to the combination to improve the efficiency seems economically unjustifiable. In the literature, reference is made to four devices for dust collection: electrostatic precipitator, wet scrubber, dry cyclone, and bag filter. Only electrostatic precipitation has had extensive commercial use. Electrostatic precipitator: high initial cost, high operating cost for labor and maintenance, 85 to 95 percent efficiency, very low power costs. Wet scrubbers: used in Scandinavia, claimed efficient in heat and chemical recovery. Dry cyclones: ineffective because of small size of sulfate fume. Bag filters: have not been studied widely. Dust from mill is principally soda ash, while sulfur gases contain much $H_2S$ and little $SO_2$.

Table 13. SALT CAKE FUME CAUGHT BY ELECTROSTATIC PRECIPITATOR: SIZE DISTRIBUTION

| Size in microns | Count | Wt percent |
|---|---|---|
| < 0.1 | 861 | 0.7 |
| 0.1-0.2 | 82 | 0.5 |
| 0.2-0.3 | 101 | 2.3 |
| 0.3-0.4 | 85 | 4.6 |
| 0.4-0.5 | 83 | 8.7 |
| 0.5-0.6 | 50 | 9.2 |
| 0.6-0.7 | 31 | 9.0 |
| 0.7-0.8 | 21 | 9.1 |
| 0.8-0.9 | 12 | 7.3 |
| 0.9-1.0 | 22 | 18.6 |
| 1.1 | 0 | 0 |
| 1.2 | 4 | 5.8 |
| 1.3 | 1 | 1.9 |
| 1.4 | 1 | 2.3 |
| 1.5 | 7 | 20.0 |

Kleinschmidt and Anthony, at Thilmany Pulp and Paper Company, used a pilot plant scrubbing unit on sulfate recovery furnace fume with 65 percent fume recovery. The plant used a 140-ton B & W-

Tomlinson unit with gas conditions of 60,000 cfm at 300 °F dry bulb and 163 °F wet bulb. Losses of salt cake were as low as 60 pounds per ton of pulp, but it is reasonable to estimate this at 150 pounds per ton. Tests at Thilmany averaged 183 pounds per ton of pulp with use of a Pease-Anthony cyclonic-spray scrubber. Theory of operation of the venturi atomizer is discussed. It has as high as 99 percent efficiency. Maximum power requirement for 90 percent efficiency is 43 kilowatt-hours per ton of pulp. The venturi scrubber consists of a venturi atomizer followed by a dry cyclone and induced draft fan. Scrubbing liquor is recirculated until almost saturated, then returned to the pulping system as make-up.

Conclusions:

1. Venturi scrubber can recover 90 percent of salt cake fume within reasonable cost limits.
2. There is economic value in low-level heat recoverable from scrubbed gases.
3. Gases may become saturated and may rain in cold weather.
4. Low first cost makes scrubbing attractive.

42. Collins, T. T.: **The sampling and analyzing of sulfate recovery furnace stack gases.** *Paper Ind.*, 29:1437-39. 1948. A literature survey is presented concerning stack sampling and analysis. The theory and conditions for isokinetic stack sampling are discussed at length.

43. Collins, T. T.: **The scrubbing of sulfate recovery furnace stack gases. Part I.** *Paper Ind.*, 28:680-86. 1947. A pilot plant study of the operating characteristics of cyclonic and venturi scrubbers for removing effluent compounds from kraft mills is described. A general description of sampling and analyzing techniques is also given. **Part II.** Ibid, 28:830-34. 1947. Operating curves, based upon the percentage of sodium salt removal, are given for both cyclone and venturi scrubbers. Emphasis is placed upon the venturi scrubber owing to its high efficiency. The effects of various types of injection patterns were also studied, and operating characteristics are given for each pattern. It is stated that 43 kilowatt--hours per ton of pulp would be required for 90 percent sodium salt removal by the venturi scrubber.

**Part III.** Discussion of data. Ibid, 28:984-86. 1947. The characteristics of the cyclone scrubber are discussed in terms of the equation:

$$\text{Efficiency} = 1 \quad \exp\left(-\frac{3DW}{4dG}\right),$$

where:

D = diameter of scrubber
W = effective volume of sprayed water
d = diameter of water droplets
G = volume of gas scrubbed.

It is noted that the efficiency of the cyconic scrubber increased as the temperature of the inlet water was lowered. The reverse of this effect was observed for the venturi scrubber. The following advantages of the venturi scrubber are noted:

1. The venturi scrubber has as high an efficiency for small particles as any device presently known. This is true from an economic as well as from a percentage recovery standpoint.

2. This type of scrubber uses less water to recover a given amount of material than do other wet devices.

44. Collins, T. T.: **Some aspects of oxidizing sulfate black liquor.** *Paper Trade J.*, 130:37-40. Jan. 19, 1950. An outline of a study, conducted at the Thilmany Mill, of the oxidation properties of black liquor is given. The effects of air and peroxide oxidation were studied. It was concluded that commercial-scale oxidation by peroxide is economically unfeasible, especially since equivalent oxidation of the sulfur can be accomplished by air.

45. Collins, T. T., and P. H. West: **Some recent developments in kraft recovery. Part I.** *Paper Trade J.*, 129:19-22. Sept. 1, 1949. With the continued interest in recovering more completely the heat and chemicals given off by the kraft process, the reclamation of chemicals other than those composing salt cake has become important. Of these, sulfur and lime losses are of special interest. In illustration, the following quantities characteristic of the Thilmany Pulp and Paper Company's operation are tabulated.

The quantities of salt cake recovered by the new venturi scrubber at the Thilmany mill were significant. An estimated 90 percent recovery has been attained, which effects a reclamation of from 7 to 12 tons of salt cake per day. The present consumption of salt cake is 128 pounds per ton of pulp, as compared with a previous average of 291 pounds per ton. This increase in efficiency has been attributed to the venturi scrubber. Although the new equipment has been ineffective in lessening odors arising from noncondensable gases, emissions of particulates from the stack have been visibly reduced. Corrosion of the removal equipment

Table 14. QUANTITY AND VALUE OF HEAT AND CHEMICALS IN THILMANY SULFATE RECOVERY FURNACE STACK GASES

| | |
|---|---|
| Pulp produced | 150 ton/day |
| Volume of stack gases | 50,000 cfm |
| Temperature of stack gases | 300°F dry bulb<br>163°F wet bulb |
| Stack dust equivalent to | 20,000 lb salt cake/day |
| Value (@$25/ton) | $250/day |
| Hydrogen sulfide + mercaptans from stack | 4,000 lb/day |
| Sulfur dioxide from stack | 400 lb/day |
| Stack gas heat above 140°F | 500,000,000 Btu/day |
| Value (@$0.80/1000 lb steam) | $383/day |

Table 15. QUANTITY AND VALUE OF CHEMICALS IN THILMANY LIME KILN STACK GASES

| | |
|---|---|
| Pulp produced | 150 tons/day |
| Volume of stack gases | 12,000 cfm |
| Temperature | 525 °F dry bulb |
| | 163 °F wet bulb |
| Dust in stack gases | 10,000 lb/day |
| Value (@$2/ton) | $10/day |

has been somewhat of a problem, especially when the gases were acidic. Stainless steel and protective coatings have been employed as preventative measures.

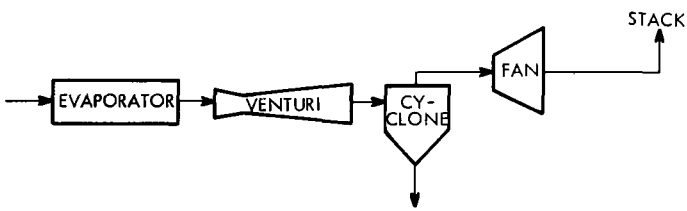


Figure 6. Schematic flow diagram for thilmany salt cake recovery process.

46. Collins, T. T., and P. H. West: **Some recent developments in kraft recovery. Part II.** *Paper Trade J.*, 129:25-29. Sept. 8, 1949. Much of the original sulfur of the kraft process is lost out the stacks in gaseous form. With the advent of modern particulate collection equipment, the problem of decreasing sulfidity of the liquor has arisen. The oxidation of black liquor has been employed to reduce this tendency. This measure has also proved effective in reducing corrosion and bad odors. The article also gives a review of the operating experience with the venturi scrubber at Thilmany, Wisconsin.

47. Collins, T. T.: **The venturi scrubber and lime kiln stack gases.** *TAPPI*, 42(1):9-13. Jan. 1959. The literature on dust losses and scrubbers for lime kilns is reviewed. Comparative test data are given on a number of units, including the Pease-Anthony venturi scrubber and a recent modification of that unit called the Chemico S-F venturi scrubber. Efficiencies of approximately 99 percent for removal of lime dust are achieved at relatively low pressure drops of 6 to 10 inches water gage across the unit. Heavy slurries are used as the scrubbing liquor in the Chemico unit. Tests showed 63 to 80 percent removal of soda fume, which is volatilized at the hot end of the kiln, and has a smaller particle size than the larger lime dust mechanically

entrained in the kiln gases. Because of the high soda content of the lime sludge burned in the kilns at Palatake, a further reduction of soda losses appears possible by improved washing of the sludge.

48. Collins, T. T., C. R. Seaborne, and A. W. Anthony: **Use of the venturi scrubber on sulfate recovery furnace gases.** *Paper Trade J.*, 126:45-49, Jan. 15, 1948. A description of the venturi scrubber employed at the Thilmany, Wisconsin, Pulp and Paper Company is given. This Scrubber was built and designed on the basis of pilot plant data, and has proved itself to be above 90 percent effective in salt recovery. Scrubbing liquor is injected at the throat of the venturi by nineteen ¾-inch nozzles. The composition of the liquor is kept constant by continuous bleeding of a stream of 30 to 32° Baume′ solution from the

Table 16. PERFORMANCE OF VENTURI SCRUBBER

| Velocity of entering gas in throat, fps | Gallons of liquor per 1,000 $ft^3$ of gas entering venturi atomizer | Liquid jet velocity fps | ΔP across atomizer, w g | Scrubbing efficiency, % |
|---|---|---|---|---|
| 217 | 7.3 | 11.0 | 18.6 | 88 |
| 216 | 5.9 | 8.5 | 20.9 | 86 |
| 219 | 5.5 | 8.0 | 15.8 | 85 |
| 211 | 7.5 | 10.5 | 19.4 | 87 |
| 250 | 5.0 | 8.2 | 18.0 | 90 |
| 235 | 3.5 | 5.0 | 13.9 | 84 |
| 259 | 2.6 | 9.2 | 12.7 | 81 |
| 248 | 3.8 | 13.0 | 16.1 | 88 |
| 233 | 5.2 | 18.0 | 18.7 | 90 |

scrubbing fluid. During the test runs the gas velocities at the throat of the scrubber were from 210 to 260 feet per second. For an average daily production of 150 tons of pulp, the power requirement of the scrubber was 40 kilowatt-hours per ton.

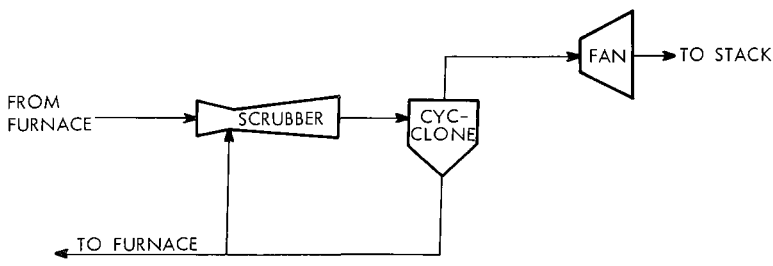


Figure 7. Schematic flow diagram of thilmany venturi scrubber process.

48.A Collins, T. T.: **Oxidation of kraft black liquor-where does it stand?** *Paper Trade J.*, July 23, 1962. This process may well play an even more vital role in odor control as increasing attention is focused on pollution. The author sets out to alleviate confusion in this field and

point out the latest advances. He discusses early studies on oxidation, control of the foam problem, economic return, the Bergstrom - Trobeck systems, British Columbia Research Council systems, Weyerhaeuser system, and other aspects of black liquor oxidation. The article cites 113 articles in the literature and lists 41 patents.

49. Colombo, P., D. Corbetta, A. Pirotta, and A. Sartori: **Critical discussion on the analytical methods for mercaptan and sulfur compounds.** *TAPPI,* 40:490-498. 1957. A short discussion of previous analytical methods is given as an introduction to the presentation of a new technique for analysis of combustion gases from recovery furnaces. With this method, the sample is absorbed in a sodium acetate solution, where the sulfur dioxide undergoes chemical reaction. The hydrogen sulfide is then precipitated in a solution of 5 percent cadmium chloride. The final steps involve absorption of methyl mercaptan in a methanol trap at minus 75°C. The sulfur dioxide is analyzed by a gravimetric determination of sulfuric acid produced by oxidation of the cadmium sulfide precipitate. Methyl mercaptan and hydrogen sulfide are determined by the standard potentiometric titration with silver nitrate. The precision of this determination is about 20 percent for mercaptan concentrations of 20 milligrams per cubic meter. It becomes better, however, for samples of larger concentration.

50. Copcutt, V. W.: **A report on precipitator applications.** *Air Eng.,* 1:44,46. Apr. 1959. A summary is given of recent industrial applications of precipitators for process improvement, material recovery, and air pollution control in the chemical field. Paper mills (all types) have 167 precipitators in use, with a total capacity of 18.9 million cubic feet per minute. A typical 1-day collection at an installation (one or more precipitators per installation) is 50 tons of sodium sulfate per recovery furnace.

51. Dalla-Valle, J. M., and H. C. Dudley: **Evaluation of odor nuisance in the manufacture of kraft paper.** *Public Health Reports,* 54(2):35-43. Jan. 13, 1939. also **Tech. Assoc. Papers,** 22:312-315. 1939. This article contains a large table of odor threshold levels, some of which are as follows (in mg/liter) Hydrogen sulfide, .0011; dimethyl sulfide, .0011; methyl mercaptan, .0011; ethyl mercaptan, .00019; diethyl mercaptan, .00025.

52. DeHaas, G. G., and G. A. Hansen: **The abatement of kraft pulp mill odors by burning.** *TAPPI,* 38(12):732-738. Dec. 1955. This paper discusses the methods used to improve the recovery of sulfur and to reduce the odor nuisance, particularly the digester relief and blow gases, associated with kraft mills. The highest losses occurred in the recovery furnace stack gases. These losses were practically eliminated by installing a black liquor oxidation tower and improving the operation of the recovery furnace. The hydrogen sulfide. released with the lime kiln gases is not significant when the kiln is operated with a slight excess of air. An analytical method, based on a modified Orsat-type apparatus for the volumetric gas analysis of digester relief and blow gases, is described. This analysis is suitable to determine oxygen, hydrogen sulfide, and the total amount of organic compounds. The chemical tests made show the efficiencies of black liquor oxidation. Use of combustion at different temperatures and of chlorination as means of rendering the digester and blow gases harmless is discussed. A detailed description is given of pilot plant tests of col-

lecting the blow gases and digester relief gases in barrage balloons. The large-scale installations now in operation include a vaporsphere and a combustion chamber in one mill. In the other mill a vaporsphere and an arrangement to mix the digester relief and blow gases with chlorination effluent is used. Details of operation and equipment are given. The results of chemical tests to eliminate possible causes of explosions are indicated.

53. DeHaas, G. G.: **Stabilization of Douglas Fir kraft black liquor.** *Pulp & Paper Mag.,* 25:70-72. Dec. 1951. For the purpose of studying the oxidation characteristics of Douglas Fir kraft black liquor, the author employed a series of laboratory steel towers 6 to 8 feet high, and packed with ¼-to ½-inch raschig rings. Extreme foaming difficulties were encountered with these towers, so a glass tower was constructed for visual observation. Results of these tests showed that 1,000 square feet of packing surface will handle 10 pounds of sulfide ion per hour. A stainless steel pilot tower was then built for further investigation. The packing consisted of 3-inch cross-partition rings having a total effective surface area of 5,750 square feet. Observed efficiencies were about 97 percent for flow rates of 29.9 gallons per minute. A full-scale tower was then constructed, 10 feet in diameter, 30 feet high, and packed to a height of 22 feet, with 4-inch cross-partition rings. With this unit in operation, it became possible to eliminate the addition of sulfur and yet observe an increase of black liquor sulfidity to 20 percent from the 16 percent normally found under previous operating conditions.

54. Dexter, G. M.: **Elimination of kraft mill odors.** *Paper Trade J.,* 129:78-81. Nov. 17, 1949. Perhaps the greatest disadvantage of the kraft process is the nauseating odor it produces. This has been stated by some to be unavoidable, the cost of control equipment being too great. The following analysis shows, however, that these waste odors can be eliminated economically, particularly in new mills. The odor, resulting mainly from hydrogen sulfide and mercaptans, varies significantly with the type of wood used, and with the ratio of sodium sulfate to caustic in the cooking liquor. Generally, the odor increases with the concentration of sulfate in the liquor. Pulp quality requires, however, that the sulfate concentration be kept about one-third that of the caustic.

Analysis of Operation

1. Scrubbing

The incondensable gases from the various sources may be introduced into a tower for scrubbing with a weak oxidizing agent, such as sodium hypochlorite, or air. This method has proved successful in the partial elimination of odors from several kraft mills.

2. Oxidation Towers

A process has been introduced in which black liquor is passed through an air oxidation tower before it is taken into the evaporators. This process has been claimed to be 90 to 100 percent effective in eliminating malodorous gases issuing from evaporators.

3. Inka Tower

An "inka tower" may be used to treat stack gases, after they have passed through the precipitator, to remove incondensable gases with 90

percent effectiveness. This tower operates by passing the gases upward through a series of perforated plates containing a sodium hydroxide solution.

4. Recovery Furnace

The operating conditions of a furnace have been shown to have a direct consequence on the amounts of sulfur compounds in the stack gases. For this reason, it is recommended that the furnace be slightly larger than mill capacity, to avoid overloading. New furnace designs have been capable of reducing sulfur gases to a large extent.

5. Direct Contact Evaporators

The direct contact evaporators tend to vaporize the odorous gases contained by the black liquor. They thereby serve as a pollution source, thought by many to be much greater than is the furnace itself. For this reason it is suggested that these evaporators be replaced with multiple effect units.

6. Burning Incondensable Gases

The incondensable gases from the various sources may be collected and burned in an oxidizing furnace. A burner located outside the immediate plant is recommended, to avoid explosion hazards.

7. Catalyst Chambers

Catalytic conversion of sulfur compounds presents a definite possibility for the abatement of pulp mill odors. Although this type of operation can be highly effective, prohibitive costs make it currently unfeasible.

8. Chimneys

Increased chimney heights would reduce odors to some extent in some cases.

9. Waste Effluents

Effluents pumped from the mill to settling ponds are also a source of odor. A possible solution would be to pipe in the stack gases from the lime kiln. This would cause rapid precipitation of the sludge and release the sulfur gases, which could be collected and introduced into the furnace for burning.

**55.** Dudley, H. C., and J. M. Dalla-Valle: **A study of the odors generated in the manufacture of kraft paper.** *Tech. Assoc. Papers,* 22:312-315. 1939. This report deals with the results of a study made on obnoxious odors generated in the manufacture of kraft paper. There are three sources of obnoxious odors owing to processes in the plant studied: (1) Production of hydrogen sulfide, (2) production of volatile organic sulfur compounds, and (3) release of large quantities of chemical smoke, which contains sodium sulfate, sodium sulfide, traces of hydrogen sulfide, and large quantities of carbon and organic matter. In evaluating the sources of odors and their contribution to the generally disagreeable conditions that arise downwind from the plant, it may be stated that: (1) The amount of hydrogen sulfide released from the plant is relatively small and may be considered of no consequence in causing any odor except at the point of origin in certain buildings. (2) The odor produced by the release of organic sulfur vapors from the pulp digesters and the vapors from the turpentine condensers is very disagreeable at the point of release; the quantity of such vapors, however, is probably not sufficient to cause marked odors under normal operating conditions at any great distance from the plant. (3) The greatest and, probably, the only major contributing factor to the obnoxious conditions arising within a mile radius of the plant

is the vast quantity of material blown out the stacks. From a plant manufacturing 300 tons per day of kraft paper, the smoke is estimated to contain, under normal operating conditions, 18,000 pounds of sodium sulfate per 24 hours. In addition, there is much carbon and partially carbonized organic matter, as well as a mixture of somewhat volatile oils. This smoke, of rather low temperature, soon reaches the ground and spreads over an area of several square miles. The peculiar sweetish and somewhat sickening odor seems to arise from the organic constituents. Methods of study are recommended that may lead to control of the odor-generating processes. The possibilities that electrical precipitators offer to prevent an excess of chemical smoke are stressed.

The concentrations of materials causing odors, are: Ethyl mercaptan 0.00019 mg/liter—odor of decayed cabbage; hydrogen sulfide 0.0011 mg/liter—odor of rotten eggs; methyl sulfide 0.0011 mg/liter—odor of decayed vegetables; propyl mercaptan 0.000075 mg/liter—unpleasant odor; thiocresol ($CH_3C_6H_4SH$) 0.0001 mg/liter—rancid, skunk-like odor. Hydrogen sulfide is formed and released (1) at the smelt tanks where molten sodium carbonate and sodium sulfide are dropped into water, and (2) in the separator building where this solution is filtered. Digestion brings about the formation of many unknown volatile organic sulfur compounds. At nearly all points of the process where the pulp is handled after digestion, certain of these ill-smelling compounds are released, mainly from the turpentine condenser and as blow gas from the digester.

Table 17. ANALYSIS OF AIR-DRIED SAMPLE FROM RECOVERY FURNACE STACK

| Material | % |
|---|---|
| Moisture | 7.8 |
| $Na_2SO_4$ | 75.1 |
| $Na_2S$ | (Trace) |
| Water-soluble organic matter | 9.8 |
| Ether-soluble organic matter | 1.8 |
| Free carbon | 5.5 |

Production of 300 tons of finished paper per 24 hours means a loss of 18,000 pounds of $Na_2SO_4$ per 24 hours. Stack gases amount to 88,000 cubic feet per minute. Thus the total solid concentration is 0.003 ounce per cubic foot (3 mg/l). In addition, great amounts of moisture, some traces of hydrogen sulfide, and large quantities of volatile organic matter are released. Twelve tons of solids per 24 hours pour out the stacks.

**56.** Felicetta, V. F., Q. P. Peniston, and J. L. McCarthy: **Determination of hydrogen sulfide, methyl mercaptan, dimethyl sulfide and disulfide in kraft pulp mill process streams.** *TAPPI*, 36(9):425-432. Sept. 1953. Mass spectrometric examination of the volatile components in the condensate from kraft pulp digester blow gas has confirmed the

presence of hydrogen sulfide, methyl mercaptan, dimethyl sulfide, and dimethyl disulfide, and has shown that the corresponding ethyl compounds and other sulfur-containing derivatives are not present in significant concentration. A relatively simple and rapid method for quantitative determination of each of the four above-named components in gas or condensate streams has been evolved and is set forth. The two acidic substances are batch-absorbed into aqueous sodium hydroxide solution while the two thio-ethers are simultaneously taken up in benzene. The liquid phases are then separated. Quantitative determination of hydrogen sulfide and methyl mercaptan in the alkaline aqueous solution is carried out by potentiometric titrations with silver nitrate. Quantitative determination of dimethyl sulfide and disulfide in the benzene solution is carried out by means of bromate-bromide titrations of the components after they have been partly separated by a single-stage batch distillation. Results obained on known mixtures are set forth. The method has given reasonably satisfactory analyses of two gases and two condensate process streams in a kraft pulp mill.

57. Felicetta, V. F. and J. L. McCarthy: **The pulp mill research program at the University of Washington.** *TAPPI*, 40:851-866. 1957. Established on January 1, 1944, the pulp mills research program has received grants to date of about $500,000. Chemical investigations have been conducted dealing with problems arising from pulp mill effluent streams. Processes for utilization, control, and analysis of these streams are now being studied. It is believed that, owing to the contributions of this program, the by-products of the pulp and paper industries are presently being utilized to a greater extent. This program is helping to bring nearer the day when complete use can be made of all the materials consumed in the kraft process.

58. First, M. W., H. E. Friedrich, and R. P. Warren: **Reduction of emissions from a recovery boiler.** *TAPPI*, 43(6):182A-185A. June 1960. This paper describes recent pilot studies conducted at large paper mills and reviews the performance of full-scale installations with gas-handling capacities of up to 160,000 cfm. The spent digestion liquor contains about one-half the weight of the original wood plus almost all the original pulping chemicals. From the boiler, particulate loading of the furnace gas runs 3 to 6 grains per cubic foot. The electrostatic precipitator removes approximately 90 percent of this loading. Soda Process Plant at Kingsport, Tennessee: Recovery by an electrostatic precipitator averages 90 percent. A Buffalo Forge Company TE Washer was installed downstream of the precipitators. The gas flow to the washer is 57,000 cubic feet per minute with a dust loading of 0.21 grains per standard cubic foot. The effluent dust loading is 0.027 grains per standard cubic foot for a recovery of 88 percent. Soda ash recovered is 1.7 pounds per minute. An analysis of the particle size efficiency curve shows that the washer does not collect material that the precipitator is incapable of collecting, but captures instead agglomerated particles blown off the precipitator plates. Kraft Process Plant at Everett, Washington: Tests on a pilot scale TE Washer gave efficiencies of up to 95 percent depending upon furnace operation. Kraft Process Plant at San Joaquin, California: A full-scale TE Washer, of 160,000 cubic foot per minute capacity, was

installed downstream of an electrostatic precipitator. Dust loadings to the washer normally ranged between 0.05 and 0.15 grains per cubic foot, but rose to greater than 3 grains per cubic foot when the precipitators were down. This washer met the guarantee to remove 88.5 percent by weight of dust discharged from the precipitators.

Table 18. RELATION OF PARTICLE SIZE TO RECOVERY EFFICIENCY

| Particle size, μ | Efficiency, % |
|---|---|
| 20 | 95 |
| 15 | 92 |
| 10 | 85 |
| 5 | 65 |
| 2 | 30 |
| 1 | 20 |

59. Fones, R. E., and J. E. Sapp: **Oxidation of kraft black liquor with pure oxygen.** *TAPPI*, 43:369-373. 1960. Black liquor oxidation has many attributes that make it an attractive measure to incorporate into a kraft mill. The high degree of foaming of southern black liquor, however, makes this process difficult to operate. For this reason, investigations were carried out to determine whether oxidation in a pressurized vessel would be economically practical. Addition of oxygen to the digester toward the end of a normal kraft cook was found to reduce the amount of sodium sulfide present, but the resulting pulp was of reduced strength and brightness. Furthermore, the cost of adding the oxygen was found to be prohibitive. Reduction of the price of oxygen, however, would make a process of this type worthy of further investigation.

60. Freudenberg, K., and M. Reichert: **Sulfate pulp mill odors.** *TAPPI*, 38(8):165A-166A. Aug. 1955. This letter to the editor refers to personal experience concerning the existence of the well-known odor around the Vita Mayer Mill near Tradate Varese, Italy (see article by P. Ghisoni, *TAPPI*, 37:201. 1954. Abstract 62). It also contains information on the threshold value of methyl mercaptan.

61. Gaudette, P. R.: **Electrical precipitators in air pollution control.** Proc. 11th Indus. Waste Conf. May 1956. *Purdue Eng. Extension Dept. Eng. Bull.* Vol. XLI. June 1957. Precipitators are 90 to 98 percent efficient. Recoveries of chemicals in kraft mills run 100 to 150 pounds per ton of pulp.

62. Ghisoni, P.: **Elimination of odors in a sulfate pulp mill.** *TAPPI*, 37(5):201-205. May 1954. A description of a plant, at Cartiera Vita Mayer & Company of Milan, Italy, for the elimination of the mercaptans from a sulfate pulp mill is given. The main operations are: (1) Condensation of all relief and blow gases with indirect condensers; (2) use of the condensed water as dilution water in a chlorination tower of the bleaching plant; (3) burning of the noncondensable gases in one boiler together with natural gas; (4) cooling of the smoke from the recovery boiler to the dew point, followed by oxidation with chlorine and reheating to avoid corrosion in the chimney.

63. Gordon, W. O., and E. E. Creitz: **Chlorine as a deodorant in sulfate paper pulp manufacture.** *Paper Trade J.*, 106:81-85. Apr. 28, 1938. The characteristic odor of kraft pulp manufacture has been attributed to methyl and ethyl mercaptans and sulfides. These are produced (1) during the digestion process, (2) from the discharging of the digesters, (3) from the condensate from the evaporators, and (4) from the burning of black liquor in the furnace. To test the odor-reducing capabilities of chlorine, a 2.5-cubic foot digester was constructed. Experiments were conducted by charging the digester with 35 pounds of chips, and adding cooking liquor consisting of 6.0 pounds of sodium hydroxide and 3.0 pounds of sodium sulfate added to 120 pounds of water. Cooks were allowed to proceed at 169° C for periods of 3 hours, during which the digesters were relieved continually. Relief gases were led to a condenser and passed through a spray chamber containing 20 liters of hypochlorite solution of known chlorine content. Two alcohol traps were added to the end of the train as a safety measure. It was found that the average amount of chlorine consumed per run was 1.29 grams. The odor-reducing capabilities of the chlorine were highly significant. The effect of chlorine on the condensed relief gases was also studied. It was observed that chlorine was fairly effective in reducing odors of these liquids, although much of the odor reappeared when the mixtures were allowed to stand overnight. From this study it was concluded that approximately 25 pounds of chlorine per ton of pulp is necessary for the elimination of odor. The cost of such a measure is prohibitive and can be justified only in special cases.

64. Gordon, W. O., and E. E. Creitz: **Elimination of obnoxious gases in the sulfate pulping process.** *Ind. Eng. Chem.*, 26:565-567. May, 1934. During the kraft cooking process, some of the sulfur combines with part of the organic constituents of the work to form mercaptans, alkyl sulfides, and similar compounds. Mercaptans and alkyl sulfides can be removed from noncondensable relief gases from the digesters of the kraft pulping process by means of a solution of hypochlorite sprayed into the gases. The aqueous layer of the condensate from these relief gases, as well as that from the evaporation of the black liquor, is also treated with hypochlorite. The odor of the organic sulfur compounds in these distillates is removed, but the liquors are not rendered entirely odorless by this treatment. The condensate from the digester relief gases consumed about 21 kilograms of active chlorine per metric ton (4.2 pounds per ton) of pulp produced, while the distillate from the black liquor consumed several times this amount. It is believed impractical to destroy all the mercaptans by the chlorine treatment, and other means are suggested for eliminating these obnoxious odors. This article gives the results obtained from an experimental sulfate mill, with a capacity of 16 kilograms (35 pounds) of chips per batch. The chips are cooked at 100 pounds per square inch for 4 to 8 hours. Sources of gases were digester relief, blow-off pit, wash water used to wash pulp (which in older mills may be discharged into a nearby stream), black liquor evaporator, and black liquor furnace (recovery furnace). Gases from cooking (relief and blow) were collected by dissolution in alcohol, and titrated with iodine solution. Results indicate 0.0603 grams of mercaptan pro-

duced per 15.96 kilograms (35 pounds) of chips. Later experiments with hypochlorite spray showed about 15 times as much chlorine was necessary to oxidize the gases as would be required by this amount of mercaptan. Chlorine evidently oxidizes the mercaptan further than iodine does, and also oxidizes other gas constituents, such as methanol. The average amount of chlorine necessary to deodorize the gas was 1.3 grams per cook. Hence chlorine consumption amounted to 0.25 kilograms per metric ton (0.5 pounds per ton) of pulp (each cook of 15.96 kilograms of air-dried wood produced 4.67 kilograms [10.3 pounds] of pulp). The digester condensate also contained mercaptan. After turpentine removal, 2.1 kilograms of chlorine per metric ton (4.2 pounds per ton) of pulp were needed to deodorize the condensate. Vapors from the evaporation of black liquor require much larger quantities of chlorine. The mercaptan odor can be removed, but other odors remain. It is recommended that the liquors containing mercaptans be used for washing pulp and for making up cooking liquor. They should not be discharged; gases containing mercaptans should be burned in the recovery furnace.

65. Haegglund, E.: **The odor question in sulphate pulp manufacture.** *Paper Trade J.*, 83:50. Dec. 16, 1926. A critical review of the theories and proposed methods of control of kraft mill air pollution is given. Emphasis is placed upon the procedure of Wislicenus, which involves the mixing of stack gases with air to promote oxidation on the way up the flue, and Schwalb's process, which utilizes wood chips for gas absorption.

66. Hansen, G. A.: **Odor and fallout control in a kraft pulp mill.** *J. of the Air Pollution Control Assoc.*, 12(9):409-413. Sept. 1962. A description is given of the air pollution control measures used at the Weyerhauser mills. Emphasis is placed upon the vaporsphere surge tank, which holds digester gases prior to their combustion in the lime kiln, and the spray scrubber, which collects the sodium salts that pass through the electrostatic precipitators. These measures have caused an estimated 90 percent reduction in odors and particulate fallout.

67. Hendrickson, E. R.: **Air pollution sampling and analysis with special reference to sulfate pulping operations.** Report to the National Council for Stream Improvement. Unpublished. 1958. This is a report on techniques and procedures for sampling materials emanating from kraft mills, which have been under laboratory investigation at the University of Florida, and also investigated in the field. It describes stack-sampling equipment, analytical procedures, areal sampling, and simplified techniques. While it is believed that these techniques and procedures will provide adequate information at minimum cost, they are not yet ready for routine use.

68. Hendrickson, E. R.: **Air pollution sampling and analysis with special reference to sulfate pulping operations.** *TAPPI*, 42:173-176A. May 1959. In view of the present public interest in air pollution, it may be a sound idea for the individual pulp mill to initiate its own sampling programs. Such programs must be well-designed, however, to provide meaningful data at a reasonable cost. A summary is given of some analytical techniques available for determination of various gases emitted by kraft mills.

69. Hendrickson, E. R.: **Atmospheric improvement activities of the pulp industry.** *TAPPI*, 43:193A-195A. Mar. 1960. Because of increased public concern, the pulp industry has been conducting research on control of its air-borne emissions. This has been difficult because control measures and restrictions are demanded even before research can be conducted to provide for them. Frequently research is hampered by the lack of reliable techniques for analytical determination of pollutant compounds. Study is therefore in progress to determine new ways of analysis. Control of particulate emissions has been accomplished by equipment such as venturi scrubbers, cyclones, and electrostatic precipitators. Gaseous emissions are more difficult to control. Oxidation of black liquor prior to evaporation has been used to curb gases issuing from the evaporators. Partially successful attempts to eliminate digester gases by burning or chlorinating have also been made. A few mills have constructed gas holders to reduce surges in the line from the blowing of the digesters.

70. Hendrickson, E. R.: **Technical procedures for determining pulp mill stack losses.** Report to the National Council for Stream Improvement. Unpublished. 1959. This report describes research work being done at the University of Florida on sampling and analysis techniques for the National Council for Stream Improvement. Initial work was in the area of stack sampling, with the recovery furnace as the first target. Sampling is done for particulates, sulfur dioxide, hydrogen sulfide, and total sulfur as sulfur dioxide. It is believed that this program provides necessary information at the least cost consistent with providing reliable data. The laboratory work is reported nearly complete, and additional field evaluation is being conducted. Basic techniques of sampling and analysis are reviewed. The work being done at Washington State for the National Council is also briefly reviewed.

71. Hendrickson, E. R., C. G. Walker, and V. D. Chapnerkar: **Identification of the nonsulfur organic compounds in stack gases from pulp mills.** Paper presented at the annual meeting of *AIHA*, Washington, D. C., May 1962. In the manufacture of wood pulp by the sulfate or kraft process, the noncellulosic portions of the wood are dissolved away by the cooking liquor. The cooking liquor consists essentially of sodium hydroxide and sodium sulfide. This liquor is added to wood chips, and the combination is cooked at high temperature and pressure for several hours. The result is a mixture of wood pulp and black liquor. The black liquor is washed from the pulp before further processing. For the process to be economically feasible the cooking chemicals must be recovered from the black liquor. This is accomplished in a reducing atmosphere in the recovery furnace. Heat, as well as chemicals, is recovered. Because of the nature of the fuel, many and various combustion products are formed. Some of these are odorous sulfur compounds that, together with some nonsulfur compounds, result in the typical kraft odor. The sulfur-bearing compounds have been reasonably well identified. The objective of this study was to identify some of the nonsulfur organic compounds. By means of mass spectrometry, ultraviolet absorption photometry, gas chromatography, and more conventional analytical procedures, the following compounds were identified: Pyrene, fluoranthene, benz(a)-anthracene, chrysene, benzo(3)pyrene, benzo(a)pyrene, benzo(g,h,i,)-

perylene, coronene, and vanillin. Phenanthrene, anthracene, and anthanthrene have been tentatively identified on the basis of comparison of their absorption spectra with those published in the literature. None of the pure, polynuclear, aromatic hydrocarbons tested gave an odor. Benzo(a)pyrene has been indentified as a strong carcinogen and benz(a)anthracene has mild carcinogenic properties. It is to be emphasized that the results presented are merely qualitative. No quantitative data have yet been obtained.

71A. Hendrickson, E. R.: **Air pollution control activities associated with alkaline pulping.** ca 1960. Unpublished: 18pp. This is a good, general paper on the emission of pollutants from kraft pulping, their effects, and control. It describes alkaline (kraft) pulping, sources of air pollutants, effects of pollutants, control of particulates, odor reduction, and other controls. Thirteen articles in the literature are cited.

72. Hisey, W. O.: **Abatement of sulfate pulp mill odor and effluent nuisance.** *TAPPI*, 34:1-6. Jan. 1951. A description is given of the recovery system in the South African Pulp and Paper Industries' mill. This plant utilizes a black liquor oxidation tower as a sulfur trap, where all odorous sulfur gases are diluted with air and passed through the oxidation tower. Residual gases from the tower are burned in the furnace. Digester condensates are blown with air into a packed tower, and the effluent is used as make-up water in a spray cooling pond. This creates a negligible odor. Fume recovery towers and a cyclonic evaporator were installed in the recovery furnace. So far it has been shown that 90 percent of the sulfur gases leaving the furnace is recoverable. The low odor of the stack gases is reduced even further by injection of small amounts of chlorine. These efforts have resulted in the maintenance of an exceedingly low degree of odor in the atmosphere, and in the requirement of relatively small amounts of new chemicals to make up the cooking solution. Operation data are presented in Tables 19 through 22.

Table 19. ANALYSIS OF SULFUR COMPOUNDS IN GAS STREAMS (lb sulfur/million $ft^3$ gas)

| | $H_2S$ and mercaptans | Organic disulfides | Inorganic sulfur | Total sulfur |
|---|---|---|---|---|
| Digester relief gases to oxidation tower (after dilution) | 1.78 | 2.40 | Nil | 4.18 |
| Noncondensable gases from evaporators | 575.9 | 99.2 | Nil | 675.1 |
| Gases leaving oxidation tower | 3.55 | 7.42 | Nil | 10.79 |
| Estimated quantity of sulfur returned to furnace from oxidation tower (as lb $Na_2SO_4$ per ton pulp) | ... | ... | ... | 8.3 |

73. Institute of Paper Chemistry. Bibliographic Series No. 178. **Alkaline processes. II. Black liquor.** 1952. Unpublished. An annotated bibliography, consisting of 108 references to foreign and domestic publications and patents concerning odors from the kraft process, covering both relief gases and black liquors. This document makes a good reference piece.

Table 20. FUME RECOVERY SYSTEM OPERATING TESTS

| | Entering | | Leaving | |
|---|---|---|---|---|
| | 1 | 2 | 1 | 2 |
| Gas temp, °F | 195 | 193 | 157 | 154 |
| Dew point, °F | 170 | 157 | 156 | 153 |
| GAS ANALYSES (equivalent lb $Na_2SO_4$/ton pulp) | | | | |
| Smelt sulfidity, % | 14 | 16.5 | ... | ... |
| $H_2S$ and mercaptans | 19.0 | 8.8 | 2.8 | 0.5 |
| Organic disulfides | 1.9 | Present | 2.0 | Present |
| COS and $CS_2$ | Nil | 2.7 | Nil | 1.6 |
| $SO_2$ | Nil | 8.9 | Nil | Nil |
| $SO_3$ | Nil | Nil | Nil | Nil |
| $Na_2S_2O_4$ | Nil | 14.1 | Nil | 3.5 |
| $Na_2SO_4$ | 148.0 | 124.0 | 12.5 | 4.0 |
| $Na_2CO_3$ | 2.9 | Nil | 2.2 | 2.0 |
| NaCl | 27.3 | 14.7 | 8.5 | 8.9 |
| Total sulfur compounds in gas (lb $Na_2SO_4$/ton pulp) | 168.9 | 158.5 | 17.3 | 9.6 |
| Salt cake recovery in fume system (lb $Na_2SO_4$/ton pulp) | ... | ... | 151.6 | 148.9 |

Table 21. BLACK LIQUOR OXIDATION TOWER DATA

| | Run no. | | |
|---|---|---|---|
| | I | II | III |
| Sulfidity of smelt, percent $Na_2S$ in black liquor | 14 | 18.7 | 25.5 |
| Entering tower: grams of $Na_2S$ per liter of black liquor | 3.4 | 5.4 | 8.2 |
| Leaving tower: grams of $Na_2S$ per liter of black liquor | 0.58 | 0.45 | 1.28 |
| Oxidation efficiency, % | 83 | 92 | 84 |

TABLE 22. CYCLONIC EVAPORATOR OPERATING TESTS

| | Entering | | | Leaving | | |
|---|---|---|---|---|---|---|
| | 1 | 2 | 3 | 1 | 2 | 3 |
| Gas temp, °F | 420 | 440 | 400 | .... | 189 | 195 |
| Dew point, °F | .. | ... | .. | .. | 169 | 170 |
| Black liquor concentrations, % solids | 51.5 | 54.0 | 54.7 | 62.5 | 65.6 | 64.1 |
| Smelt sulfidity, % | 19.5 | 25 | 14 | .... | ... | ... |
| Gas Analyses (equivalent lb $Na_2SO_4$ ton of pulp) | | | | | | |
| $H_2S$ and Mercaptans | 17.4 | 2.6 | 52.5 | 9.1 | 10.6 | 19.0 |
| Organic disulfides | Nd | Nd | 3.2 | Nd | Nd | 1.9 |
| COS and $CS_2$ | 1.2 | 0.8 | Nil | 0.9 | 0.8 | Nil |
| $SO_2$ | 58.0 | 10.0 | 5.3 | 5.5 | 2.0 | Nil |
| $SO_3$ | Nil | Nil | Nil | Nil | Nil | Nil |
| $Na_2S_2O_4$ | Nil | Nil | Nil | 18.8 | 6.0 | Nil |
| $Na_2SC_4$ | 153.0 | 136.0 | 234.5 | 86.0 | 82.0 | 148.0 |
| $Na_2CO_3$ | 34.8 | Nil | 5.4 | 11.4 | Nil | 2.9 |
| NaCl | 38.1 | 30.0 | 74.3 | 20.8 | Nil | 27.3 |
| Total sulfur compunds in gas (lb $Na_2SO_4$/ton pulp) | 229.6 | 149.4 | 295.5 | 120.3 | 101.4 | 168.9 |
| Salt cake recovery in fume system (lb $Na_2SO_4$/ton pulp) | ... | .... | .... | 109.3 | 48.6 | 126.6 |

**74.** Kenline, P. A.: **In quest of clean air for Berlin, New Hampshire.** *Sanitary Engineering Center Technical Report A62-9.* U. S. Dept. of Health, Education, and Welfare, Public Health Service, Cincinnati, Ohio. 1962. An appraisal of the nature, sources, extent, and effects of air pollution in Berlin, New Hampshire, concludes that the situation warrants corrective action. Pollutants of concern include particulates, sulfur dioxide, hydrogen sulfide, and malodorous organic sulfur gases. The major source of these pollutants is a pulp mill. On the basis of this survey corrective measures are recommended.

Table 23. AIR QUALITY MEASUREMENTS

| Pollutant | Average | Maximum |
|---|---|---|
| Suspended particulate, $\mu g/m^3$ | 183 | 309 |
| Hydrogen sulfide, ppb | | 23 |
| Sulfur dioxide, ppb | 16 | 33 |
| Dustfall, tons/$m^2$ per mo | 35 | 68 |
| Soiling, Cohs/1000 ft | 0.5 | 1.9 |

Table 24. MEASUREMENTS OF POLLUTION FROM VARIOUS SOURCES IN THE KRAFT PULP MILL

| Source | Emission of pollutants in lb per hr | | |
|---|---|---|---|
| | Hydrogen sulfide | Sulfur dioxide | Particulate |
| Recovery furnace | 332 | 50 | 97 |
| Blow gases | 3. | 0.1 | |
| Smelt tank | 1.7 | 0.06 | 65 |
| Lime kiln | 9.7 | 0.6 | 106 |
| Boiler plant (1 boiler only) | | 248 | 740 |

Some of these measures are attractive because of resulting economic advantages. Community good will, too, must be weighed with the other advantages of the installation of additional control equipment. Sampling procedures are included, and the report gives an over-all status of air pollution from kraft mills.

75. Klason, P.: **Malodorous substances in sulfate.** *Paper Trade J.*, 79:30. July 10, 1924. Investigations concerning the nature of malodorous compounds formed during the kraft process are described. Methods of analysis for these compounds and suggestions for preventing their formation are given.

76. Kopita, R.: **The use of an impingement baffle scrubber in gas cleaning and absorption.** *Air Repair*, 4:219-222. Feb. 1955. In many paper mills, gases vented from rotary lime kilns contain up to 15 grains of dust per cubic foot of gas. Combination venturi slot and impingement plate scrubbers are operating in many mills. The scrubber achieves over 97 percent recovery and reduces the amount of dust in the discharge to less than 0.3 grains per cubic foot of gas.

77. Kraft, F.: **Marathon in Canada.** *TAPPI*, 32:14-A. Sept. 1949. The chemical recovery system of the new Marathon pulp mill in Canada employs an air oxidation system for the black liquor that has obtained oxidation efficiencies of up to 80 percent. Upon leaving this system, the liquor goes to the multiple effect evaporators, after which it is further concentrated in furnace gas cyclone scrubbers, which clean the stack gases as well as evaporate black liquor.

78. Kress, O., and J. W. McIntyre: **The distribution of sulfur during the kraft pulping operation.** *Paper Trade J.*, 100:43-45. May 2, 1935. A laboratory scale investigation was conducted to determine the stoichiometry of the sulfur compounds throughout the stages of the kraft process. Both stationary and rotary autoclaves were used. The rotary units had a capacity of about 14 pounds air-dry wood chips, while the stationary units had capacities of about 625 grams. Because preliminary experiments with the rotary autoclaves resulted in high sulfur losses, it was decided that the smaller, stationary units were more adaptable to the requirements of this project. The gas relief lines from the autoclaves were fitted with three glass absorption towers, packed with glass wool and filled with nitric acid. When the autoclaves were relieved through this system, no odor characteristic of mercaptans could be detected. It was therefore assumed that all the effluent sulfur compounds were trapped out. Two types of experiments were made, those in which the cooks were discontinued and analyzed after given time periods,

and those in which the cooks were allowed to run continuously, the liquor being sampled and analyzed at various times throughout the run. Screened spruce chips and prescribed quantities of cooking liquor were used in the experiments to simulate mill operations. The sulfide and hydroxide in the cooking liquor, and the total sulfur in the white liquor were determined, as well as the total sulfur in the black liquor. Analytical techniques are given in the text. It was concluded from the data that the loss in sulfur arising from the blowing of digesters is very small (about 0.05 percent). About 3 to 4 percent of the sulfur is retained by the cooked wood chips.

**79.** Kress, O.: *U. S. Patent 2,570,460.* **Oxidizer for black liquor.** The tower consists of an enclosed series of downward inclined shelves that distribute the downward flow of black liquor in a continuous, even pattern. Air is passed into the tower from below, which gives a thin gas-liquid contact area for mass transfer.

**80.** Landsberg, H., and E. E. Escher: **Potentiometric instrument for sulfur determination.** *Ind. Eng. Chem.*, 46(7):1422-1428. July 1954. An automatic instrument continuously records trace quantities of oxidizable sulfur compounds in the range of one-tenth to several hundred parts per million by volume of gases in atmospheres. Colorimetric titration with electrolytically generated bromine is used. Titration is electronically controlled at a potentiometric balance point. Various applications in the natural gas, process, and air pollution fields are discussed.

**81.** Lardieri, N. J.: **Present treatment practice of kraft mills on air-borne effluents.** *Paper Trade J.*, 142:28-33. Apr. 14, 1958. A survey of 58 U. S. kraft mills was taken to determine the extent of air pollution control being exercised. The results indicated the following equipment was being used:

Table 25. CONTROL EQUIPMENT ON RECOVERY FURNACE AND LIME KILN EXHAUST

| | |
|---|---|
| Recovery furnace exhaust | |
| Electrostatic precipitators [a] | 50 |
| Venturi scrubbers [a] | 9 |
| No equipment [a] | 2 |
| Lime kiln exhaust | |
| Wet scrubbers | 54 |
| Dry dust collectors | 1 |
| No equipment | 1 |
| No lime kiln | 2 |

[a] Three mills use both precipitators and scrubbers.

The electrostatic precipitators were from 90 to 98 percent efficient as compared with 85 to 90 percent for the venturi scrubbers. In addition, the scrubbers required more power for their operation. These disadvantages may be offset somewhat, however, by the relative simplicity of the venturi and its ability to trap some of the odorous noncondensable gases.

Odorous gases occur primarily in the digestion and recovery systems. Digester gases are sometimes collected and burned or chlorinated. Recovery gases have been passed through oxidation towers or wet scrubbers. Odor masking has also been employed. Money spent by the mills in the survey was broken down as follows:

Electrostatic precipitators and venturi scrubbers for recovery furnace stack gases ..... $24,142,000

Lime kiln exhaust equipment .....$2,661,000

Black liquor oxidation towers, chlorination towers, and other control methods for sulfur compounds ..... $1,885,000

Stack gas cleaning equipment for fuel and bark burners .....$1,973,000

Total..... $30,661,000.

82. Lardieri, N. J.:**Pulp and paper industry progress in atmospheric pollution control.** *Paper Trade J.*, 143:42-46. 1959. The significant progress made by the pulp and paper industry in the control of airborne effluents has fortunately preceded the current rise of public interest in the subject. Although the research program is proceeding along several lines, it has two divisions: measurement and control. Recent studies of measurement techniques have involved work with gas chromatography and various chemical methods, such as the ADAK analyzer; and the device for sampling hydrogen sulfide, sulfur dioxide, and total sulfur developed by the University of Florida research project. Black liquor oxidation has become of considerable interest as a means of reducing emissions. This method has been applied mainly in the northern regions of the North American continent, because foaming difficulties have been encountered in the south. Other important developments in emission control are sulfur dioxide recovery systems, venturi scrubbers, and electrostatic precipitators. With these and other developments, the pulp industry should be able to meet the requirements of the rapidly increasing regulatory activity in the air pollution field.

83. Maksimov, V. F., et al.: **Purification of kraft mill waste gases.** *Bumazh. Prom.*, 34(5):14-16. 1959. Chem. Abs., 54:1778. Jan. 25, 1960. Waste gases from the recovery furnace of the Svetogorsk kraft mill were treated in an experimental foam-type scrubber. Results of this experiment are given in Table 26. Furnace gas velocity was 3.2 meters per second, and the scrubbing solution contained 20 to 30 grams of NaOH per liter. In a full-scale installation (4,700 mm high, 2,200 mm diameter scrubber, with a capacity of 30 cubic meters per hour of black liquor and 800 cubic meters per hour of gas), using black liquor as the scrubbing medium, the content of sulfur gases contained in mixed gases was reduced (Table 26).

84. Marsch, J. D. F., and W. B. S. Newling: *British Patent 769,996* (1957). **Oxidation of hydrogen sulfide to sulfur dioxide.** A process is discussed for treating hydrogen sulfide-containing gases by catalytic oxidation of the hydrogen sulfide to sulfur dioxide. This process comprises heating the gases that contain at least sufficient oxygen to oxidize the hydrogen sulfide to sulfur dioxide (180 to 450 $^{\circ}$ C), and bringing them into contact with a catalyst consisting of one or more sulfates of heavy metals superficially converted to sulfates of metal oxide cations.

Table 26. PURIFICATION OF RECOVERY FURNACE GASES

| | Conc pretreat, mg/m$^3$ | Conc after treatment, mg/m$^3$ |
|---|---|---|
| Furnace gas alone: | | |
| Hydrogen sulfide | 34 to 1,200 | 10 to 40 |
| Methyl mercaptan | 12 to 204 | 8 to 46 |
| Sulfur dioxide | 15 to 937 | 2 to 120 |
| Furnace and evaporator gases, mixed: | | |
| Hydrogen sulfide | 792 | 41 |
| Methyl mercaptan | 149 | 22 |
| Sulfur dioxide | 254 | 7.4 |
| Furnace, evaporator, and digester gases, mixed: | | |
| Hydrogen sulfide | 529 | 42 |
| Methyl mercaptan | 2,560 | 335 |
| Sulfur dioxide | 87.8 | 7.3 |
| Dimethyl sulfide | 330 | 26 |
| Dimethyl disulfide | 166 | 26 |
| Hydrogen sulfide | 57.2 to 181 | 3.5 |
| Methyl mercaptan | 78.8 to 111.5 | 0.58 to 3.4 |
| Sulfur dioxide | 3.9 to 12.1 | 0.44 to 0.52 |

85. May, B. F.: **Experiences in the abatement of kraft mill odors.** Unpublished. Gulf States Paper Corporation. Tuscaloosa, Alabama. 16 pp. The experiences at the Braithwaite, Louisiana, mill of Gulf States Paper Corporation with the odor problem since the mid-1920's are presented. A historical presentation is given, in the hope that the rest of the industry may learn from the experiences of this mill. Use of a direct condenser for digester blow gases brought the first success in odor abatement. Chlorine was tried for deodorizing the condenser effluent, but was found ineffective. Until 1951 all attempts at odor abatement were made with condensers, water spray scrubbers and improved processing equipment. Trials of odor-masking aromatic compounds began in the fall of 1951. Efforts to effect a milder and less obnoxious odor by use of these compounds has produced a slight trend toward abating odors. Positive conclusions, however, await extended trials. Trial of a scrubber system employing bleach plant waste liquors is under consideration. Evaluation of results is the most difficult aspect of this field of study. A practical yet accurate means of odor measurement is needed.

86. May, B. F.: **Experiences in the abatement of kraft mill odors.** *TAPPI*, 36:374-378. 1953. A retrospective account of experiences of the Gulf States Paper Corporation's problems in air pollution control is given. A digester blow gas condenser was the first successful piece of equipment used for odor control. Chlorine gas was also used, but was ineffective. The use of odor-masking compounds has been of limited success; further experimentation is needed before it will be possible to assess the real value of these compounds. A process

utilizing bleach plant waste liquors in a scrubber system is currently under study.

87. Meinhold, T. F.: **Thilmany reclaims 90% of chemicals from flue gas.** *Chem. Proc.*, 19:14-15. Mar. 1956. Thilmany installed a 250-ton B & W recovery unit equipped with a black liquor venturi scrubber. It has been in operation over 2 years. A schematic diagram and operating characteristics are given below. The one dis-

Table 27 OPERATING CHARACTERISTICS OF B & W RECOVERY UNIT

| | | |
|---|---|---|
| Black liquor flow | 50,000 lb/hr | |
| Collection efficiency | 89 % | |
| Saltcake loss | 4,500 lb/day | |
| Draft loss across venturi | 30 in. water | |
| Draft loss across separator | 4 in. water | |
| Pulp production | 165 tons / day | |
| Recovery furnace weight | 120 tons | |
| Recovery of soda from furnace gas by venturi scrubber | 90 % | |
| | To scrubber | From scrubber |
| Dust loading at standard conditions dry gas, gr/ $ft^3$ | 5.87 | 0.66 |
| Dust loading, stack conditions, gr/$ft^3$ | 3.90 | 0.40 |

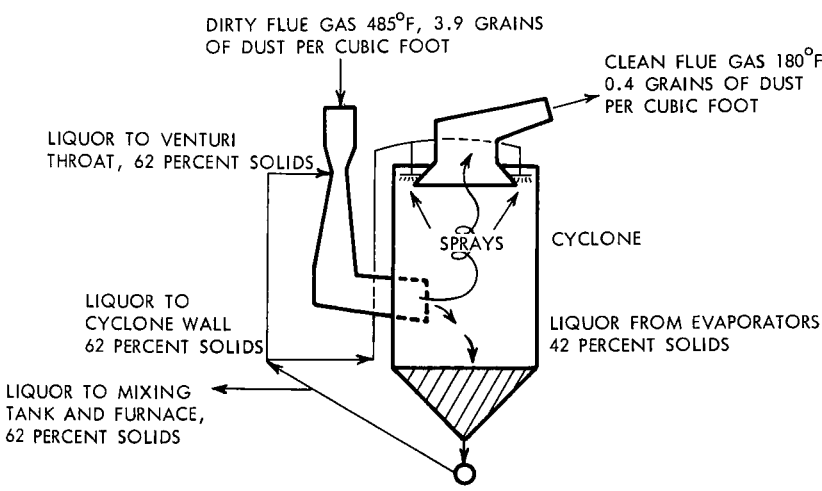


Figure 8. Schematic flow diagrams of thilmany chemical recovery unit.

advantage—high power requirements—is more than offset by good heat recovery (saves 3,000 pounds of steam per hour), good chemical recovery (90 percent), low cost, and low space requirements.

88. Mellor, D., and P. G. Stevens: **Use of the venturi scrubber on alkali fume.** *Australian Pulp & Paper Ind.*, 9:222-248. 1955. To reduce economic losses and air pollution from effluent particulate matter, the Burnie Pulp Mill has conducted laboratory tests on various types of collection equipment to determine the one most suitable for industrial use. Pilot plant experiments with bubble cap towers, cyclones, packed towers, spray chambers, and venturi scrubbers were conducted with varying degrees of success. On the basis of favorable pilot data and encouraging results published by earlier investigators, a full-scale venturi scrubber was selected.

The full-scale unit operated with a recovery efficiency of 85 percent or more when the injected cleaning liquor flow rate was not less than 3 gallons per 1,000 cubic feet of stack gas. The gas

Table 28. STRUCTURAL SPECIFICATIONS OF THE VENTURI SCRUBBER

| Part | Spec |
|---|---|
| Venturi inlet diameter | 4' 8" |
| Venturi throat diameter | 26" |
| Venturi outlet diameter | 3' 10" |
| Cyclone diameter | 12' |
| Cyclone height | 35' |
| Fan power | 450 hp |

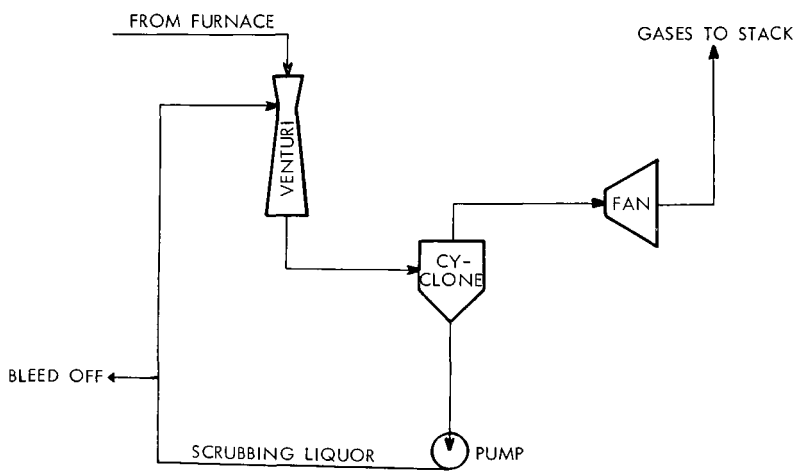


Figure 9. Schematic flow diagram of venturi scrubber unit at Burnie mill.

flow rates through the venturi were from 53,000 to 64,000 cfm. Approximately 15 to 17 inches pressure water gauge was lost across the venturi, and 2.0 to 2.5 inches were lost across the cyclone.

89. Meuly, W. C., and B. K. Tremaine: **Abatement of sulfate pulp mill malodors by odor masking agents.** *TAPPI*, 36:154-161. 1953. The results of an attempt to mask sulfate pulp mill odors are described. Masking compounds were added directly to the digester charge, and allowed to flow through the plant equipment and remain with the source of odor at all times. Laboratory tests were made to determine the relative amounts of odor produced by the various operations of the kraft process. The results are presented in terms of "Gram Sense Values" per ton of pulp. These results are given in Table 29. The cost of applying the masking agent was from 12 to 24 cents per ton pulp for the usual concentrations. Results of full-scale tests indicated that this type of odor masking was definitely effective.

Table 29. RELATIVE AMOUNTS OF ODOR PRODUCED BY VARIOUS OPERATIONS OF THE KRAFT PROCESS

| Location | "GSV"/ton of pulp | |
|---|---|---|
| | Total liberated | Air-borne portion |
| Digester relief | $20,000 \times 10^6$ | $20,000 \times 10^6$ |
| Digester blowdown | Min $27,000 \times 10^6$ | Min $27,000 \times 10^6$ |
| Multiple effect evaporators | $102,000 \times 10^6$ | $10,000$ to $30,000 \times 10^6$ |
| Cascade evaporators | $38,000 \times 10^6$ | Max $38,000 \times 10^6$ |
| Total | $187,000 \times 10^6$ | $50,000$ to $100,000 \times 10^6$ |

90. Mockridge, P. C.: **The use of Peabody scrubbers on lime kiln stack gases.** *TAPPI*, 38(4):255-256. Apr. 1955. A cyclone is unsuited for control of lime kiln gases because there is a considerable quantity of material below 10 microns in size. Fines not collected by cyclones may run 2 to 4 grains per standard (60°F) cubic foot. Baghouses are at a disadvantage because of high moisture and temperature. A Peabody scrubber in use at the Chesapeake Corporation is described. The kiln is 11 feet in diameter with a rating of 250 tons of calcine per day; gas low is 26,000 standard (60°F) cubic

feet per minute. Temperature of gases leaving scrubber is 150°F and the pressure drop across the scrubber is 4½ to 5½ inches of water. Dust load from kiln is 16 grains per standard cubic foot; from the scrubber is 0.3 to 0.4 grains per standard cubic foot. This corresponds to an efficiency of 97 percent.

91. Moon, D. G.: **Practical aspects of recent kraft mill developments.** *Paper Trade J.*, 104:103-107. Feb. 25, 1937. Since the depression the construction of new mills has created interest in the application of some of the new improvements.

These have generally been found to apply to:

1. Improved cooking techniques,
2. recovery and utilization of heat from blow-off steam,
3. use of more efficient evaporation systems,
4. improved recovery furnace units,
5. continuous causticizing systems and lime recovery,
6. reduction of odors.

Condensing the blow-off steam has probably been the greatest help in reducing offensive odors. The noncondensables can be exhausted through a fan and readmitted to the furnace, which reduces much of the odor that would otherwise be emitted.

92. Moore, H., H. L. Helwig, and R. J. Graul: **A spectrophotometric method for the determination of mercaptans in air.** *Am. Ind. Hyg. Assoc. J.*, 21:466. 1960. With this method, mercaptans are collected in 5 percent mercuric acetate solution and reacted with N,N-dimethyl-p-phenylenediamine to form a red complex that can be quantitatively determined with a spectrophotometer. The sensitivity of this method is about 0.00023 micromole of mercaptan per cubic centimeter. There is no interference from $H_2S$. Interferences from $SO_2$ and $NO_2$ are present, but are slight in the concentrations normally encountered in air pollution studies.

93. Murray, F. E., and H. B. Rayner: **A procedure for sampling and analysis of hydrogen sulfide in kraft mill stack gases.** *TAPPI*, 44:219-220. 1961. A description is given of a method of determining hydrogen sulfide in stack gases. The hydrogen sulfide content of the gas is analyzed by absorption in zinc acetate solution and subsequent colorimetric observation by Lauth's violet method. This procedure permits rapid sampling and analysis for hydrogen sulfide concentrations of 20 to 800 micrograms per liter.

94. National Council for Stream Improvement: **Air pollution Technical Bulletins.** Unpublished. A series of bulletins relates to air pollution and the pulp and paper industry. To date there are 16:

94-1. **Sampling and analysis of air-borne gaseous effluents resulting from sulfate pulping.** Sept. 1957. 28 pp. A literature review of available methods of sampling for atmospheric effluents from the sulfate pulping industry. 54 references.

94-2 **Present treatment practice of air-borne effluents in the United States kraft industry.** Nov. 1957. 18 pp. Results are given of a survey of the kraft pulping industry in the United States. It was the purpose of this survey, with respect to which most mills were individually visited by Council engineers, to obtain information concerning the disposal of air-borne effluents within the industry. A total of 58 mills participated in the survey.

94-3. **Applied meteorology for the pulp and paper industry.** Mar. 1958. 21 pp. General.

94-4. **Application of instrumentation to pulp mill atmospheric discharges.** Mar. 1958. 17 pp. A literature review of instruments for the sampling, analysis, and automatic sampling and recording of particulate and gaseous atmospheric pollutants. 48 references.

94-5. **Methods for the determination of sulfur compounds in pulp mill effluent gases.** Sept. 1958. 13 pp. Report of research at Washington State University on a gas chromatographic procedure for the separation and identification of sulfur-containing malodorous compounds. This procedure has potential application to the study of gaseous pulp mill effluents at the sources and in the atmosphere in the vicinity of the sources.

94-6. **Gas chromatographic analysis of hydrogen sulfide, sulfur dioxide, mercaptans, and alkyl sulfides and disulfides.** Apr. 1959. 14 pp. A gas chromatographic technique is presented for the separation and identification of complex mixtures of volatile sulfur-containing compounds of the type found in kraft pulp digester blow gas and black liquor combustion products. Research at Washington State for the NCSI.

94-7 **Studies on the analysis of kraft mill gases.** Apr. 1959. 9 pp. A continuation of Bulletin 5.

94-8. **Manual of methods for the determination of atmospheric contamination (tentative).** May 1959. 18 pp. Intended for the use of local mills this manual has sections on: meteorological instrumentation and observations, recommended units for reporting air pollution measurements, recommended standard method for particulate fallout, and recommended standard method for the determination of hydrogen sulfide.

94-9. **Progress report on studies on the analysis of pulp mill gases.** July 1959. 17 pp. A progress report on the gas chromatographic technique, and on research at Washington State.

94-10. **Progress report on studies on the analysis of pulp mill data.** Sept. 1959. This summarizes the research work at Washington State University on methods for collection and analysis of gaseous pulping emissions.

94-11. **Laboratory evaluation of gas sampling procedure for recovery furnace stack gas.** Dec. 1959. 25 pp. Research at the University of Florida for the NCSI to determine the concentration of gases of interest that result from sulfate pulping operations is described. Stack sampling is done for particulates, sulfur dioxide, hydrogen sulfide, and total sulfur as sulfur dioxide. This method is believed to provide the necessary information at the least cost consistent with providing reliable data. The analytical techniques are reasonably standard, and in all cases a colorimetric procedure has been adopted.

94-12. **Manual: Air pollution control combustion processes.** Apr. 1960. This manual, prepared for the NCSI at New York University, deals with the legislative aspects of air pollution (particularly solid fuel combustion) and methods of complying with various control codes that have been promulgated. A section on measurement of atmospheric pollutants and incineration is also enclosed, together with a state air pollution control agency directory.

94-13. **A manual for adsorption sampling and gas chromatographic analysis of kraft mill source gases.** Sept. 1960. This bulletin presents detailed methods for sampling and chromatographic analysis of kraft mill gases developed at Washington State University. The method is based upon the condensation and/or adsorption of the gaseous effluents on activated silica followed by desorption and subsequent gas liquid chromatographic analysis.

94-14. **Manual for the sampling and analysis of kraft mill recovery stack gases.** Oct. 1960. This bulletin describes a method for the sampling and analysis of kraft mill recovery stack gases developed at the University of Florida. It is intended as an alternate to the previously described chromatographic technique. This method samples for particulates, hydrogen sulfide, sulfur dioxide, and total combustible sulfur gases.

94-15. **Survey of kraft mill emission using gas chromatography techniques.** Oct. 1962. 23 pp. This bulletin presents the results of the survey of gaseous emissions conducted at nine specific northwest kraft mills by the National Council Research Projects at Washington State University. This study was designed to evaluate gas chromatographic sampling and analytical techniques developed at Washington State University and also to attempt to define the ranges of emissions from typical operations and various pollution abatement processes used in the industries. This report illustrates the variation in gases discharged and gives evidence to indicate the efficiencies of various abatement procedures. This study is concerned primarily with the concentration of hydrogen sulfide, methyl mercaptan, dimethyl sulfide, and dimethyl disulfide. The presence of many other gaseous components is established and two of these are identified. Tests were run on digester gases, oxidation towers, recovery furnace gases, lime kilns, smelt tanks, evaporators, and miscellaneous sources.

94-16. **Identification of non-sulfur organic compounds in the stack gases from pulp mills.** Dec. 1962. 19 pp. (Qualitative but not quantitative) identification of a number of polynuclear, aromatic hydrocarbons is made, as well as a tentative identification of vanillin. The following have been identified or tentatively identified in the recovery furnace stack gas: benz(a)anthracene, benzo(a)pyrene, benzo(e)pyrene, benzo(g,h,i,)perylene, chrysene, coronene, fluoranthene, pyrene, anthanthrene, and phenanthrene. None of the compounds identified were found to have an odor, except vanillin. Some of these compounds are considered carcinogens.

95. National Council for Stream Improvement: **A critical review of the literature on black liquor oxidation and the burning of kraft mill noncondensable gases.** Unpublished, ca 1959. 19 pp. The literature on the oxidation of sulfate black liquor and the burning of noncondensable gases produced in the kraft process has been reviewed. The theoretical aspects of oxidation, existing treatment systems, and the patent aspects of black liquor oxidation are discussed. The published results on oxidation indicate that, from an air pollution standpoint, a considerable reduction in the amounts of reduced sulfur compounds from evaporation and recovery furnace operation can be obtained. Evidence is also presented suggesting that the emission of odorous sulfur compounds from the digestion phases of the kraft

process can be greatly curtailed if these noncondensable gases are passed through the black liquor oxidation unit. Other benefits attributed to black liquor oxidation include chemical savings in the form of lessened sulfur make-up and decreased lime usage in the causticizing stage. Black liquor oxidation also results in increased sulfidity in the cooking liquor. The patent aspects of black liquor oxidation are rather confused at the moment but it appears that the Bergstrom-Trobeck patents have priority in the United States. Successful burning of noncondensable gases from digesters and multiple effect evaporators in units such as lime kilns, bark burners, separate furnaces, and recovery furnaces has been reported. There has been an apparent decrease in this practice in the United States during the past 20 years, since only 2 of 60 kraft mills surveyed in 1957 engaged routinely in burning as compared with 14 of 30 mills in 1939. This may be attributed to the difficulties experienced in the combustion of these highly explosive mixtures. This review concludes that both black liquor oxidation and the burning of noncondensable gases offer possibilities for greatly reducing the amounts of reduced sulfur compounds emitted to the atmosphere from kraft operations. Capital expenditures required for both processes would appear to be moderate and operating costs low. In burning of noncondensable gases, the use of existing combustion equipment seems not only economical but desirable. Operating costs for noncondensable burning are negligible, and may be more than met by chemical and heat savings in the case of black liquor oxidation. It does not appear from the previous literature on this subject that the possible techniques for oxidizing foamy-type black liquor have been exhausted. Additional research on this problem seems fully warranted. There are 27 references.

96. National Council for Stream Improvement. **A review of the kraft odor problem and control processes.** Unpublished. Oct. 16, 1951. 8 pp. This paper updates the Institute of Paper Chemistry's bibliography; it contains 29 entries.

97. Organization for European Economic Co-operation (Paris): **The position in Europe and in the United States. Air and Water Pollution.** 132-137. Feb. 1957. Papermaking itself is not a serious cause of air pollution. The production, by the sulfite and sulfate processes of the pulp industry, of the cellulose it requires is the real source of the trouble. Both processes are liable to emit salts in the form of fly ash and sulfur dioxide, while from the sulfate process come the obnoxious odors of hydrogen sulfide, mercaptans, and analogous sulfide compounds. The operations that cause pollutants to escape are classified for the sulfate and the sulfite processes. The chief methods for reducing air pollution are listed. A flow diagram (schematic) is included to show where air polluting substances arise from a sulfate mill. A very brief description of the air pollution situation is given for four mills—two Swedish and two German.

98. Pate, J.: **Air pollution in area of Snohomish River Bridge, Everett, Washington.** Unpublished. Extreme corrosion observed on the bridge across the Snohomish River at Everett, Washington, prompted a study to determine its cause. Since corrosion rates were decidedly higher on the western side of the bridge, a pulp mill situated

immediately to the west was suspected to be the major factor contributing to the problem. The ensuing study indicated that the bridge was being exposed to large quantities of air-borne particulate matter issuing from the mill, and that this was the prime cause of the high corrosion rates.

99. Pate, J.: **Air-borne effluent study, Longview.** Unpublished. An investigation was carried out to study the sources and characteristics of air-borne particulates issuing from a pulp mill at Longview, Washington. For this purpose, dustfall jars were placed at various strategic locations surrounding the mill, and samples were obtained from the outlets of the lime kiln and the recovery furnace. The results were analyzed from air pollution and corrosion standpoints. It was found that calcium salts did not present a serious corrosion problem. The major source of calcium deposits was the causticizer-slaker operation. It was concluded that the lime kiln and recovery furnace stacks provided the majority of the corrosive compounds. An unexpectedly high concentration of sulfur compounds was found issuing from the lime kiln stack.

100. Pate J.: **Dispersion and fallout project, Longview paint discoloration - Episode II.** Unpublished. A description is given of the air pollution outbreak in Longview, where the paint on several houses showed severe discoloration. Upon consideration of the location of the damage and the meteorological aspects, it was concluded that the pollution must have arisen from a pulp mill. Suggestions for preventive action against further occurrences are given.

101. Perttula, A. E.: **Novel ideas in kraft recovery reduce losses, odors for Finnish mill.**. *Paper Trade. J.*, 145:20-23. June 26, 1961. The recovery system of the Rosenlew kraft pulp mill has incorporated some unique ideas that significantly add to its effectiveness. This system has reversed the position of the boiler, placed the electrostatic precipitator before the economizer, and added a double venturi scrubber to the system to provide a final cleansing of the gases before they are emitted to the stack. This arrangement necessitates operation of the precipitator at the abnormally high temperature of 600 to 800°F. This temperature range, however, is above the "back corona" region, and reasonably high efficiencies are obtained. Resulting high heat transfer coefficients, owing to the lack of dirt deposition on the economizer, demonstrate a marked advantage of this type of system. The temperature of the gases issuing from the economizer is about 250°F. Green liquor is used as a cleansing agent in the venturi scrubbers, which is advantageous because the sodium carbonate in the liquor induces the absorption of the sulfur compounds in the flue gas. This system removes, on the average, 38 pounds of sulfur and 7.5 pounds of sodium per short ton of pulp; the efficiency is greater than 97 percent.

102. Reid, H. A.: **The odor problem at Maryvale.** *Proc. Australian Pulp & Paper Ind.*, 3:479-500. 1949. The evolution and control of odorous gases at the Maryvale pulp mill are discussed. Emissions from various locations in the plant were estimated; the results are presented in Table 30 and Figure 11.

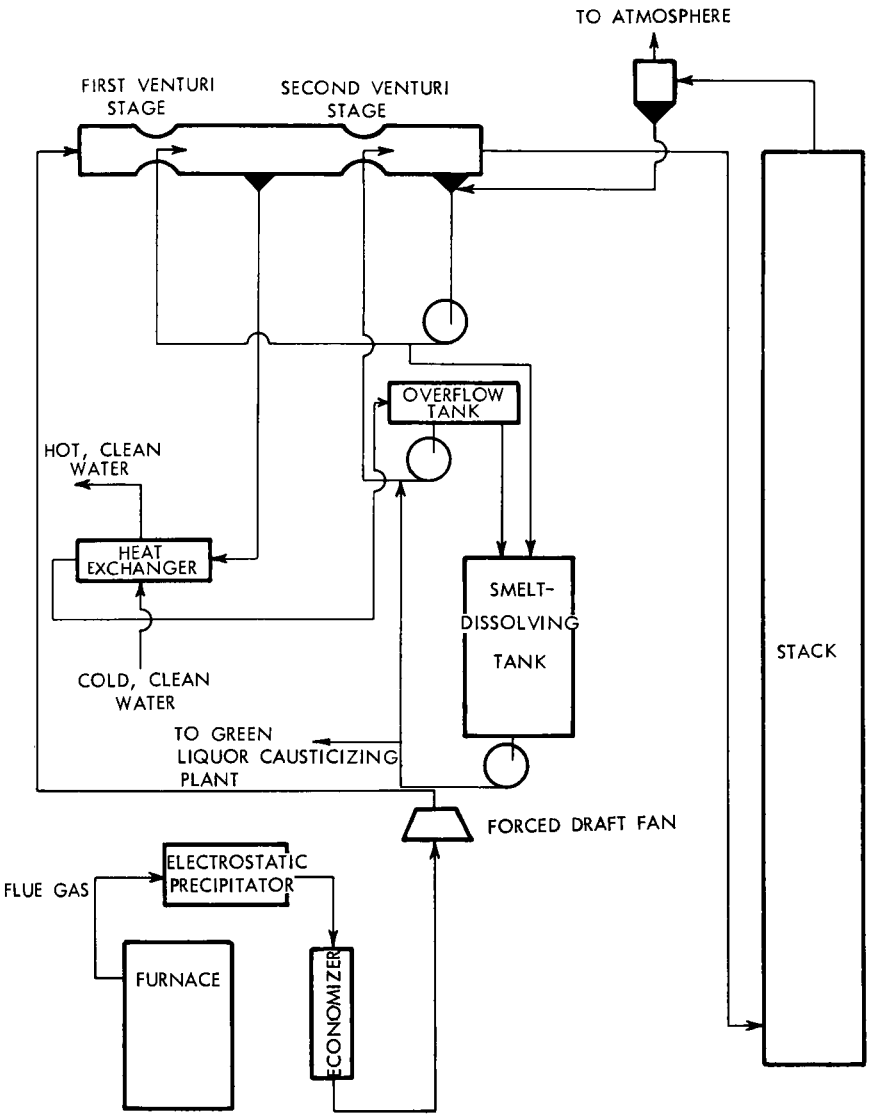


Figure 10. Schematic flow diagram of recovery system at Rosenlew mill.

Measures taken to control these effluents at the Maryvale Mill are as follows:

Digesters

Digester blow gases have been vented through an air oxidation tower. Various methods have been suggested to "even out" the sporadic flow of the blow gases.

Table 30. NUISANCE VALUE OF MARYVALE EFFLUENTS

| Source | Volume, $ft^3/hr$ | Threshold odor dilution, 1 part in |
|---|---|---|
| Gases | | |
| Digester | 1,000 | 10,000 |
| Evaporator | 300 | 2,000 |
| Furnace flue | 3,000,000 | 4 |
| Liquids | | |
| Oily condensate from digester gas | 0.05 | 20,000,000 |
| Aqueous condensate from digester gas | 2.0 | 300,000 |
| Digester foul water | 240 | 10,000 |
| Evaporator | 8,000 | 1,500 |

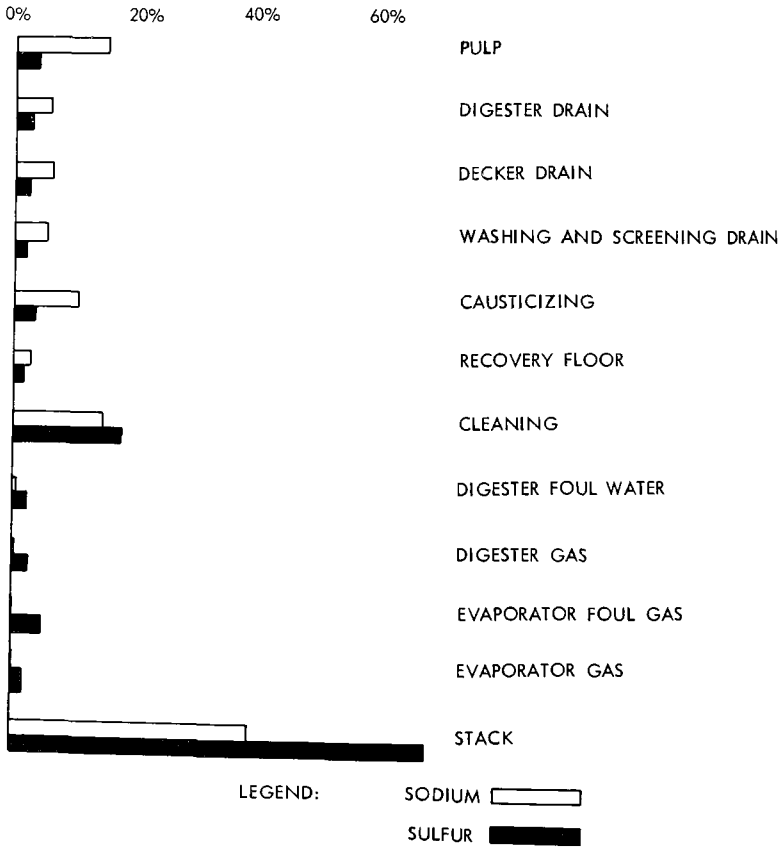


Figure 11. Relative sodium and sulfur losses at Maryvale.

Evaporator Gas

A tower packed with blue metal has been utilized for oxidation of black liquor. This has reduced the odor potential of the resulting evaporator gas about 30 percent. A much larger tower for this purpose is proposed.

103. Roberts, L. M., and C. E. Beaver: **Application of electrical precipitation equipment for the reduction of atmospheric pollution.** *Proc. Air Pollution Control Assoc.*, 50-59. 1951. As of 1951, Research Corporation had in operation 67 precipitators handling 6.5 million cubic feet of gas per minute. The gas has acidic constituents; particles are of extremely fine size. Collected dust is extremely light, weighing 9 pounds per cubic foot. A recent survey indicated recoveries of 88 to 145 pounds of salt cake per ton of pulp produced, the average being 118 pounds. At the average precipitator availability of 95 percent, a 250-ton pulp mill recovers 4,900 tons of re-usable material per year.

104. Roberts, L. M., C. E. Beaver, and W. H. Blessing: **Operating experiences with Cottrell precipitators on sulfate recovery furnace gases.** *Paper Trade J.*, 127:45-49. Oct. 28, 1948. A general discussion is given on the theory and construction of Cottrell electrostatic precipitators. These precipitators are built in multiple units, and are rated on the basis of 90 percent removal for a flow rate of 2,000 cfm. The pressure drop between inlet and outlet is less than 1 inch of water. A summary of operating experiences was prepared from questionnaires sent to various plants currently operating precipitators of the Cottrell type. These results are summarized in Table 31.

Table 31. AMOUNT OF PRECIPITATE COLLECTED WITH COTTRELL PRECIPITATOR

| Plant | Production, tons/day | Collected precipitate, lb/ton pulp | Make-up salt cake, lb/ton pulp | |
|---|---|---|---|---|
| | | | Prior to installation of precipitator | After installation of precipatator |
| 1 | 225 | 88 | 246 | 158 |
| 2 | 250 to 300 | 100 | | |
| 3 | 630 | 145 | 307 | 163 |
| 4 | 300 | 117 | | |
| 5 | 288 | 135 | 316 | 193 |
| 6 | 230 | 135 | 300 | 180 |
| 7 | 450 | 130 | 300 | 170 |
| 8 | 980 to 1,120 | 110 to 120 | 225 | 132 |
| 9 | 225 | 94 | 350 | 256 |

105. Sands, A. E., and L. D. Schmidt: **Recovery of sulfur from synthesis gas.** *Ind. Eng. Chem.*, 42(11):2277-2287. Nov. 1950. This article describes process for $H_2S$ removal and sulfur recovery using dry box (iron oxide) and activated carbon catalyst.

**106.** Schneider, F.: **Deodorization of kraft mill exhaust.** *TAPPI*, 41:70/A. Jan. 1958. The most offensive emissions from the kraft process are in the form of terpenes, mercaptans, and sulfides. Furthermore, the operation most responsible for air pollution is the blowing of the digesters. A process for collection and elimination of terpenes, mercaptans, and sulfides arising from digester blow gases is therefore suggested. The process first condenses out high boiling terpenes from the blow gases in a preliminary condenser. The gases then pass through a continuous filter into an adsorbing unit where the sulfur compounds are removed. From the adsorbing unit the gases are issued into the stack. Since the digester blows are discontinuous the absorber can be intermittently steam-cleaned, and the resulting liquid can be separated and processed (Patent applied for).

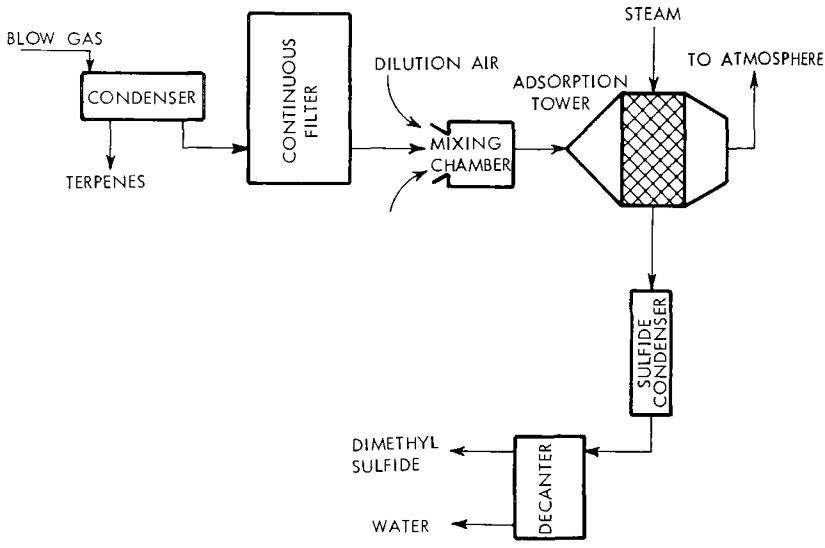


Figure 12. Schematic flow diagram of deodorization process.

**107.** Schoening, M. A., L. W. Shemilt, and R. H. Wright: **Black liquor oxidation and the absorption of noncondensable digester gases.** *TAPPI*, 36:176-179. 1953. A pilot scale oxidation tower was constructed to study black liquor stabilization. The packing consisted of vertical asbestos sheets, the surfaces of which were imprinted with a pattern of raised diamonds. Black liquor was allowed to flow over the sheets and was oxidized by concurrently flowing air. The spent air from the column contained none of the odors characteristic of hydrogen sulfide or mercaptans. In further studies, noncondensable digester gases were allowed to flow through the column with the air supply. With correct operating conditions, all the odor was again eliminated. This type of tower provides a method of continuous black liquor oxidation that practically eliminates problems with foaming. It is also compact.

Table 32. ABSORPTION OF NONCONDENSABLE GASES IN BLACK LIQUOR OXIDATION UNIT

| Chips | Air flow, cfm | Non condensable gas flow, cfm | Black liquor feed, lb/hr | $Na_2S$ content of Black liquor, g/l | | Digester blown | Sampled | Gas | | | |
|---|---|---|---|---|---|---|---|---|---|---|---|
| | | | | | | | | To tower | | From tower | |
| | | | | To tower | From tower | | | $H_2S$, µg/l | MeSH, µg/l | $H_2S$, µg/l | MeSH, µg/l |
| Hemlock | 21.2 | 7.5 | 6,100 | 2.7 | 0.7 | 11·24 to 11:35 | 11:11 to 11:13 | 12 | 6,240 | ... | ... |
| | | | | | | | 11:14 to 11:16 | ... | 6,000 | ... | .... |
| | | | | | | | 11:18 to 11:20 | ... | 6,560 | ... | ... |
| | | | | | | | 11:22 to 11:24 | 3 | 1,280 | ... | ... |
| | | | | | | | 11:26 to 11.27 | ... | 320 | ... | ... |
| | | | | | | | 11:30 to 11:33 | ... | 3,480 | ... | 16 |
| Cedar | 31 | 13.4 | 6,020 | 2.9 | 0.6 | 14:34 to 14:44 | 14:18 to 14:19 | ... | 3,520 | ... | 24 |
| | | | | | | | 14:28 to 14:29 | 16 | 4,960 | ... | ... |
| | | | | | | | 14:33 to 14:34 | ... | .... | ... | ... |
| | | | | | | | 14:41 to 14:42 | 12 | .... | ... | ... |
| Fir | 21.5 | 7.3 | 5,860 | 2.3 | 0.4 | 20:53 to 21:07 | 20:50 to 20:51 | 10 | 1,940 | ... | ... |
| | | | | | | | 20:55 to 20:56 | 24 | 9,440 | ... | ... |
| | | | | | | | 20:59 to 21:00 | 28 | 9,920 | ... | ... |
| | | | | | | | 21:06 to 21:07 | 32 | 15,760 | ... | ... |
| Hemlock | 21 | 7.0 | 5,350 | 2.3 | 0.3 | 9:33 to 9:43 | 9:25 to 9:27 | 8 | 9,840 | ... | ... |
| | | | | | | | 9:32 to 9:33 | 20 | 12,800 | ... | ... |
| | | | | | | | 9:36 to 9:37 | 16 | 12,600 | ... | ... |
| | | | | | | | 9:42 to 9·43 | 16 | 6,400 | ... | ... |
| Fir | 30.2 | 13.5 | Nil | ... | ... | 11:37 to 11:49 | 11:37 to 11:38 | 96 | 3,680 | 96 | 1,840 |
| | | | | | | | 11·42 to 11:43 | 140 | 7,840 | 92 | 1,690 |
| Hemlock | 19.4 | 3-6 | 5,380 | 2.4 | 0.4 | 14:25 to 14:36 | 14:26 to 14:27 | 52 | 4,480 | 10 | 192 |
| | | | | | | | 14:29 to 14:31 | 52 | 5,200 | ... | .. |
| | | | | | | | 14:33 to 14:35 | 56 | 4,240 | 10 | 152 |
| Fir | 28.7 | 13.8 | 5,360 | 2.7 | 0.6 | 15:42 to 15:52 | 15:41 to 15:42 | . | 240 | .. | ... |
| | | | | | | | 15:44 to 15:45 | 216 | 9,920 | .. | ... |
| | | | | | | | 15.48 to 15:49 | 300 | 8,800 | . | [illegible] |
| Fir | 19.4 | 3-6 | 5,290 | 3.0 | 0.6 | 17:15 to 17:27 | 17:08 to 17:10 | 16 | 4,320 | .. | 60 |
| | | | | | | | 17 15 to 17:17 | 8 | 2,820 | . | .. |
| | | | | | | | 17:19 to 17:20 | 16 | 2,160 | 2 | 48 |
| | | | | | | | 17:22 to 17:24 | 32 | 5,040 | 2 | 448 |
| Average | | | | | | | | 39 | 5,693 | | |

**108.** Schoening, M. A., and R. H. Wright: **Intensity of the odor release at various points in the kraft pulping process.** *TAPPI*, 35:564-569. 1952.
A study was carried out at the Bloedel, Stewart, and Welch pulp mill to determine the concentrations of hydrogen sulfide and mercaptan issuing from various sources. The sources investigated were:

1. Digester relief,
2. blow gases,
3. evaporator effluents,
4. furnace gases,
5. stack gases,
6. washer room ventilators,
7. green liquor tank vapors,
8. sewer outfall,
9. lime sludge filter.

Results are summarized in Tables 33 through 39. It was concluded that the blow tank and stack gases were the major sources of odor, while the other effluents were minor in comparison.

Table 33. DIGESTER GAS-OFF

| Chips | Digester charged | Sample taken | Noncondensable gas | | Condensate | | Remarks |
|---|---|---|---|---|---|---|---|
| | | | $H_2S$, μg/l | methyl mercaptan, μg/l | $H_2S$, μg/ml | Methyl mercaptan, μg/ml | |
| Fir | 10:54 | 11:12 to 11:18 | 104 | 13,600 | 18 | 304 | Digester charge included 200 lb sulfur |
| | | 11.18 to 11:26 | 96 | 14,600 | 19 | 64 | |
| | | 11.26 to 11.35 | 112 | 6,300 | 14 | 32 | |
| Hemlock | 9·15 | 9:50 to 9:53 | 192 | 6,000 | 32 | 224 | Digester charge included 200 lb sulfur |
| | | 9 53 to 9:58 | 40 | 9,800 | 41 | 176 | |
| | | 9 58 to 10:03 | 120 | 7,300 | 38 | 144 | |
| Fir | 11 52 | 12·10 to 12.13 | ... | ... | .. | ... | No sulfur added to digester charge |
| | | 12 13 to 12 16 | ... | ... | 1 | ... | |
| | | 12.16 to 12·21 | ... | 920 | 1 | ... | |
| | | 12 21 to 12.27 | ... | 280 | 3 | ... | |
| | | 12 27 to 12:34 | 16 | 1,240 | 6 | ... | |
| | | 12 34 to 12:42 | ... | 1,040 | 7 | ... | |
| Hemlock | 10·46 | 10·53 to 10:58 | ... | 120 | 9 | ... | |
| | | 10.58 to 11·04 | ... | 1,000 | 8 | ... | No sulfur added to digester charge |
| | | 11·04 to 11·10 | ... | 440 | .. | ... | |
| | | 11 10 to 11·17 | ... | 400 | .. | ... | |
| | | 11·17 to 11.23 | 8 | 1,230 | 2 | ... | |
| | | 11 23 to 11.29 | ... | ... | 4 | ... | |

Table 34. DIGESTER RELIEF

| Chips | Digester filled | Digester relieved | Digester blown | Sample taken | Noncondensable gas | | Condensate | | Remarks |
|---|---|---|---|---|---|---|---|---|---|
| | | | | | $H_2S$, μg/l | Methyl mercaptan, μg/l | $H_2S$, μg/ml | Methyl mercaptan, μg/ml | |
| Fir | 7.50 | 10.23 | 10·50 | 10·27 to 10·30 | 60 | 18,300 | 108 | 1,308 | Digester charge included 200 lb sulfur |
| | | | | 10:32 to 10:35 | 76 | 19,800 | 140 | 812 | |
| | | | | 10.36 to 10:39 | 104 | 20,400 | 151 | 816 | |
| Hemlock | 7:45 | 11:00 | 11·19 | 11:03 to 11 06 | 16 | 13,400 | 166 | 1,170 | Digester charge included 200 lb sulfur |
| | | | | 11 06 to 11 13 | 32 | 14,700 | 165 | 916 | |
| | | | | 11:13 to 11 19 | 64 | 13,500 | 124 | 760 | |
| Fir | 11·42 | 4·27 | 4.51 | 4.33 to 4·37 | 160 | 17,300 | 73 | 178 | No sulfur added to digester charge |
| | | | | 4·37 to 4 42 | 93 | 17,500 | 49 | 136 | |
| | | | | 4·42 to 4·47 | 147 | 20,800 | 48 | 128 | |
| | | | | 4·47 to 4·51 | 73 | 19,500 | 56 | 140 | |
| Hemlock | 6:41 | 9.20 | 9:41 | 9:26 to 9:29 | 84 | 15,200 | 16 | 456 | No sulfur added to digester charge |
| | | | | 9:29 to 9·32 | 104 | 14,600 | 22 | 444 | |
| | | | | 9.32 to 9:35 | 124 | 13,500 | 42 | 436 | |
| | | | | 9:35 to 9:38 | 32 | 12,000 | 43 | 244 | |
| | | | | 9:38 to 9:41 | 72 | 14,000 | 71 | 312 | |

Table 35. DIGESTER BLOW GASES

| Chips | Digester blown | Sample taken | Noncondensable gas | | Condensate | | Total vapor | Remarks |
|---|---|---|---|---|---|---|---|---|
| | | | $H_2S$, μg/l | Methyl mercaptan, μg/l | $H_2S$, μg/ml | Methyl mercaptan, μg/ml | Methyl mercaptan, μg/ml at 100°C | |
| Fir | 1 45 | 1:47 to 1:49 | Nd[a] | 12,500 | Nd | Nd | Nd | Digester charge included 200 lb sulfur |
| | | 1:49 to 1:50 | Nd | 31,700 | Nd | Nd | Nd | |
| | | 1.50 to 1:52 | Nd | 49,000 | Nd | Nd | Nd | |
| | | 1 52 to 1.52½ | Nd | 93,100 | Nd | Nd | Nd | |
| | | 1:52½ to 1:53½ | Nd | 99,900 | Nd | Nd | Nd | |
| | | 1·53½ to 1.55 | Nd | 102,700 | Nd | Nd | Nd | |
| | | 1 55 to 1.57 | Nd | 51,400 | Nd | Nd | Nd | |
| Fir | 9:30 | 9:31 to 9:33 | Nd | 5,680 | Nd | Nd | Nd | Digester charge included 200 lb sulfur |
| | | 9:33 to 9:35 | Nd | 11,400 | Nd | Nd | Nd | |
| | | 9:35 to 9 36½ | Nd | 12,800 | Nd | Nd | Nd | |
| | | 9·36½ to 9 38 | Nd | 16,800 | Nd | Nd | Nd | |
| | | 9 38 to 9:40 | Nd | 23,200 | Nd | Nd | Nd | |
| | | 9 40 to 9:42 | Nd | 19,200 | Nd | Nd | Nd | |
| | | 9:42 to 9 43½ | Nd | 30,000 | Nd | Nd | Nd | |
| | | 9.43½ to 9:45 | Nd | 22,000 | Nd | Nd | Nd | |
| Hemlock | 9:52 | 9:53 to 9:55 | Nd | 11,200 | Nd | Nd | Nd | Digester charge included 200 lb sulfur |
| | | 9.55 to 9:57 | Nd | 33,600 | Nd | Nd | Nd | |
| | | 9:59 to 10 00 | Nd | 36,400 | Nd | Nd | Nd | |
| | | 10·00 to 10·01 | Nd | 49,800 | Nd | Nd | Nd | |
| | | 10·01 to 10:02 | Nd | 29,600 | Nd | Nd | Nd | |
| | | 10·02 to 10·03 | Nd | 38,400 | Nd | Nd | Nd | |
| | | 10·03 to 10:05 | Nd | 16,800 | Nd | Nd | Nd | |
| Fir | 9:09 | 9:10 to 9:14 | ... | 4,600 | 13 | 188 | 198 | No sulfur added to digester charge |
| | | 9:14 to 9:18 | .. | 3,800 | 28 | 356 | 281 | |
| | | 9:18 to 9.23 | ... | 19,800 | 20 | 344 | 578 | |
| Fir | 1:10 | 1·10 to 1·14 | ... | 3,800 | 16 | 228 | 206 | No sulfur added to digester charge (blown from higher than usual) |
| | | 1:14 to 1:18 | ... | 8,800 | 34 | 428 | 424 | |
| | | 1:18 to 1 22 | 80 | 30,800 | 29 | 524 | 892 | |
| Hemlock | 10:37 | 10:37 to 10:42 | ... | 800 | 2 | 120 | 85 | No sulfur added to digester charge |
| | | 10·42 to 10:46 | ... | 6,200 | 12 | 188 | 228 | |
| | | 10:46 to 10 50 | ... | 3,300 | 21 | 356 | 272 | |
| Hemlock | 3.34 | 2:35 to 2:40 | ... | 6,600 | 22 | 112 | 191 | No sulfur added to digester charge |
| | | 2:40 to 2:44 | ... | 10,400 | 31 | 212 | 322 | |
| | | 2:44 to 2:47 | ... | 11,700 | 1 | 8 | 227 | |

[a] Note: Nd means not determined.

Table 36. EVAPORATOR JET CONDENSER EFFLUENT

| Date, 1950 | Liquid effluent | | Air above liquid surface | |
|---|---|---|---|---|
| | $H_2S$, μg/ml | Methyl mercaptan, μg/ml | $H_2S$, μg/l | Methyl mercaptan, μg/l |
| May 25 | 2 | 24 | Tr | 120 |
| May 30 | Tr [a] | 12 | .... | 28 |
| May 31 | Tr | Tr | ... | 20 |
| June 2 | Tr | Tr | Tr | 16 |

[a] Tr means trace.

Table 37, FURNACE GAS

| Date, 1950 | Noncondensable gas | | Condensable gas | |
|---|---|---|---|---|
| | $H_2S$, μg/l | Methyl mercaptan, μg/l | $H_2S$, μg/ml | Methyl mercaptan, μg/ml |
| May 27 | ... | 7 | 2 | 40 |
| May 29 | 390 | ... | 49 | 56 |
| May 30 | 84 | ... | 52 | 112 |
| June 1 | 52 | ... | 10 | 40 |
| June 9 | 1 | ... | 3 | 4 |
| June 12 | 2 | ... | 2 | 10 |
| June 15 | 3 | ... | 9 | 78 |
| June 20 | .. | ... | 27 | 24 |

Table 38. STACK GAS

| Date, 1950 | Noncondensable gas, depth 6 ft | | Noncondensable gas, depth 12 ft | | Condensate combined, 6 and 12 ft | |
|---|---|---|---|---|---|---|
| | $H_2S$, μg/l | Methyl mercaptan, μg/l | $H_2S$, μg/l | Methyl mercaptan, μg/l | $H_2S$, μg/ml | Methyl mercaptan, μg/ml |
| June 9 | 3 | ... | 42 | ... | 1 | ... |
| June 9 | 326 | ... | 195 | ... | 7 | 30 |
| June 12 | 119 | ... | 204 | ... | 5 | 10 |
| June 15 | 370 | ... | 536 | 36 | 15 | 25 |
| June 20 | 460 | 15 | 420 | ... | 46 | 28 |

**109.** Schwalbe, C. G.: **Removal of the odors in sulfate pulp mills.** *Paper Trade J.*, 75:51. Nov. 23, 1922. A process is described that utilizes a tower, packed with wood chips or straw, to absorb the obnoxious gases produced in the kraft process. Since wood has the property of absorbing various organic sulfur compounds, it is hypothesized that these products in their absorbed form react with oxygen to form relatively less obnoxious compounds. This type of absorbent also provides a surface for condensation of the sodium salts of the stack gases. These solids can be washed off and re-used, and the wood chips,

Table 39. MISCELLANEOUS OPERATION DATA

| Sampling | Date, 1950 | Noncondensable gas | | Liquid | |
|---|---|---|---|---|---|
| | | $H_2S$, μg/l | Methyl mercaptan, μg/l | $H_2S$, μg/ml | Methyl mercaptan, μg/ml |
| Roof vent over knotter | May 10, | ... | 32 | ... | ... |
| | May 24, | ... | 20 | ... | ... |
| | May 30, | ... | 4 | ... | ... |
| Roof vent over green liquor smelt tank | May 18, | ... | ... | ... | ... |
| | May 30, | ... | ... | ... | ... |
| Hood over lime sludge filter | June 1, | ... | 16 | ... | ... |
| Sewer outfall | May 18, | ... | ... | ... | ... |
| | May 26, | Tr[a] | ... | 2 | 12 |
| | May 31, | Tr[a] | Tr | ... | 10 |

[a] Tr means trace.

thereby regenerated, may be replaced in the tower for further use. After use, the wood chips can be burned as boiler fuel. When the chips are used to purify digester gases only, they can be cooked for pulp with no adverse effects.

110. Schwalbe, C. G.: **Removal of offensive odors in sulfate pulp mills.** *Paper Trade J.*, 74:52. Jan. 19, 1922. The amounts of mercaptans, methyl sulfide, and methyl disulfide emitted per ton of pulp are stated, and a discussion of the pollution problem, with various methods of contaminant treatment, is given.

111. Segal, W.: **Quantitative determination of methyl mercaptan, dimethyl disulfide, and dimethyl sulfide in a gas mixture.** *Anal. Chem.*, 25(11): 1645-1648. Nov. 1953. Studies were undertaken to determine the sulfur products arising from microbial decomposition of organic sulfur compounds. Evidence was obtained that volatile sulfur compounds such as methyl mecaptan and alkyl sulfide were produced from methionine. No satisfactory methods were available for the quantitative determination of these products, formed slowly during the decomposition process. The method described provides a means of quantitatively determining methyl mercaptan, dimethyl disulfide, and dimethyl sulfide occurring as mixtures in gas. The method should find application where quantitative determination of mercaptans and alkyl sulfides is needed.

112. Segerfelt, B. N.: **The bad odor from sulphate pulp mills.** *Paper Trade J.*, 74:95 June 8, 1952. Sources of odor and operating conditions for their minimization in the kraft process are discussed. It is stated that odors arising from the cooking process can be almost eliminated by cooling the gases and diluting the condensate with water. It is recommended that the operating temperature of the furnace be kept high to reduce odorous compounds further.

113. Segerfelt, B. N.: **Method of removing malodorous gases formed in the sulfate and soda pulp manufacture.** *U. S. Patent 1,854,428.* Apr. 19, 1932. This method removes malodorous gases formed in pulp manufacture by bringing them to their dew points, and treats them with hydrocarbons belonging to the terpene and camphor groups.

114. Semrau, K. T.,et al.: **Influence of power input on erficiency of dust scrubbers.** *Ind. Eng. Chem.*, 50:1615-1620. Nov. 1958. The performance of venturi, cyclonic spray, and pipeline scrubbers on dust and fume from a black liquor recovery furnace and a lime kiln was investigated on a pilot plant scale. Cold water was used as scubbing liquid in the first two devices, and hot recirculated solution in the third. Efficiency data were correlated on the basis of total theoretical power input per unit of gas flow rate.

115. Sensenbaugh, J. D., and W. C. L. Hemeon: **A low cost sampler for measurement of low concentration of hydrogen sulfide.** *Air Repair*, 4:5-25. 1954. The AISI hydrogen sulfide tape sampler is described. This unit operates by forcing the sample air by means of a vacuum through a paper filter impregnated with lead acetate. Any hydrogen sulfide in the sample reacts to form lead acetate, the amount of which can be determined by photoelectric techniques.

116. Sherwood, P. K.: **Odor removal improves public reactions.** *Paper Ind.*, 42:784-787. 1961. There are several general methods of solving the odor problems of kraft mills. Among these are the methods of catalytic combustion, absorption, and odor masking and counteraction. Odor masking and counteraction are attractive because of their relatively low cost. A specific counteracting compound, however, may be required for each different odor.

117. Siggia, S., and R. L. Endsberg: **Determination of alkyl sulfides and disulfides.** *Anal. Chem.*, 20:938-939. 1960. A method for analysis of alkyl sulfides, disulfides, and mercaptans is described. The procedure involves titration with bromine water, the endpoint being determined by the appearance of the characteristic bromine color. The method is precise to about 0.3 percent in the best cases.

118. Stevens, R. H.: **Report of committee on sulfate pulp.** *Paper Trade J.*, 84:142-145. Feb. 24, 1927. (Section on sulfate mill odors.) The committee has made no direct progress on the problem of odor abatement. A process has recently been proposed to eliminate digester odors by adding disodium phosphate. This has proved effective in experiments but has yet to be proved on a full-scale basis. It was reported that a Nordstrom drying tower constructed in the Crown-Williamette Mill in Camas, Washington, was highly effective in reducing effluent, malodorous gases.

119. Stone, J. E.: **Progress in alkaline pulping—1953.** *Southern Pulp & Paper Manufacturer*. Oct. 1, 1954. This is a literature review on progress in alkaline pulping for 1953. It covers the following subjects: expansion, modernization, new mills, the cooking process, sulfate liquor cycle (including black liquor oxidation and odor control), stream pollution, and digester corrosion. It has 200 references.

120. Sultzer, N. W., and C. E. Beaver: **Alkali recovery by electrical precipitation.** *Paper Trade J.*, 102:33-35. Jan. 23, 1936. Losses of sodium salts through the stacks of recovery furnaces of both soda and kraft pulp mills may cause a serious economic loss. Tests for the magnitudes of these losses have resulted in the following data:

Table 40. LOSS OF SODIUM SALTS [a]

| Plant | Process | Type of recovery furnace | Capacity, tons/day | $Na_2O$ loss, lb /ton pulp |
|---|---|---|---|---|
| 1 | Kraft | Kiln | 60 | 57 |
| 2 | Kraft | Kiln | 220 | 68 |
| 3 | Kraft | Spray | 110 | 69 |
| 4 | Kraft | Spray | 60 | 85 |
| 5 | Kraft | Kiln | 100 | 20 |
| 6 | Kraft | Kiln | 125 | 22 |
| 7 | Kraft | Kiln | 38 | 32 |
| 8 | Kraft | Spray | 72 | 40 |
| 9 | Soda | Spray | 50 | 59 |
| 10 | Soda | Kiln | 37.5 | 31 |
| 11 | Soda | Kiln | 35 | 67 |
| 12 | Soda | Kiln | 100 | 30 |

[a] On the assumption that salt cake costs $15 per ton, this indicates that a 100-ton kraft mill would save $24,800 annually by collecting these compounds.

A variety of equipment is used for particulate collection in pulp mill stack gases, but the combined advantages of the Cottrell electrostatic precipitation equipment seem to outweigh those of other types Electrostatic precipitators can collect particulate salts either as dry solids, as wet salts, or solution. Their efficiency is high over a wide variety of operating conditions. The electric power consumption averages about 8 killowatt hours per million cubic feet of gas treated. The pressure drop is only about ½ inch of water, and labor costs are low. Corrosion can become a problem with steel precipitators handling $Na_2SO_4$, and it is suggested that all steel parts exposed to the stack gases be continuously wetted with an alkaline solution.

121. Sylwan, O.: **Practical results obtained with black liquor oxidation.** *Paper Trade J.*, 137:14. Sept. 4, 1953. A description is given of the operation of a black liquor oxidation plant of the B-T type. It is suggested that this type of unit should have many important advantages, even in older mills. With the oxidation unit, a 34 percent increase in capacity of the recovery system was observed. Important savings were also made because of reduced corrosion and fuel consumption owing to the presence of the oxidation plant.

122. Tomlinson, G. H., G. H. Tomlinson II, J. N. Swartz, H. D. Orloff, and J. H. Robertson: **Improved heat and chemical recovery in the alkaline pulping processes.** *Pulp & Paper Mag. Can.*, 47:71-77. 1946. A progress report is given on the development of additional heat and chemical recovery equipment with descriptions of the various units involved. These are as follows: cyclones, cyclonic evaporators, oxidation towers, and packed columns. This material is presented with emphasis on economic advantages. It is acknowledged, however, that the air pollution aspect is of extreme importance.

123. Tomlinson, G. H., and J. M. Ferguson: **Odor abatement in an akaline pulp mill.** *Pulp & Paper Mag. Can.*, 57:119-122. Dec. 1956. The principal measures employed to overcome the problem of odorous emission at the Cornwall Mill have consisted of cooling and condensation of the digester blow and relief steam, chlorination of the noncondensable gases, and complete fixation of the black liquor. These measures, combined with control of the sulfidity of the black liquor, have significantly reduced the "kraft odors" in the area surrounding the plant.

124. Tomlinson, G. H., and H. R. Douglas: **A progress report on the secondary recovery of heat and chemicals in the alkaline pulp mill.** *Pulp & Paper Mag. Can.*, 53:96-104. Mar. 1952. The TBT recovery process is described, which employs a conventional Bergstrom-Trobeck oxidation system in the fixation of black liquor. Upon leaving the oxidation unit, the liquor is passed through multiple effect and cyclonic evaporators and then burned in the furnace. The resulting gases are scrubbed in the cyclonic evaporator, two deluge towers, and a cooling tower before being emitted to the atmosphere. Resulting hot water is used for washing the brown stock. It is noted that in former applications of the B-T oxidation process the resulting minimization of sulfur losses at the evaporators was offset by corresponding greater losses (as $SO_2$ and $SO_3$) in the furnace. With the present system, however, such furnace losses are greatly eliminated.

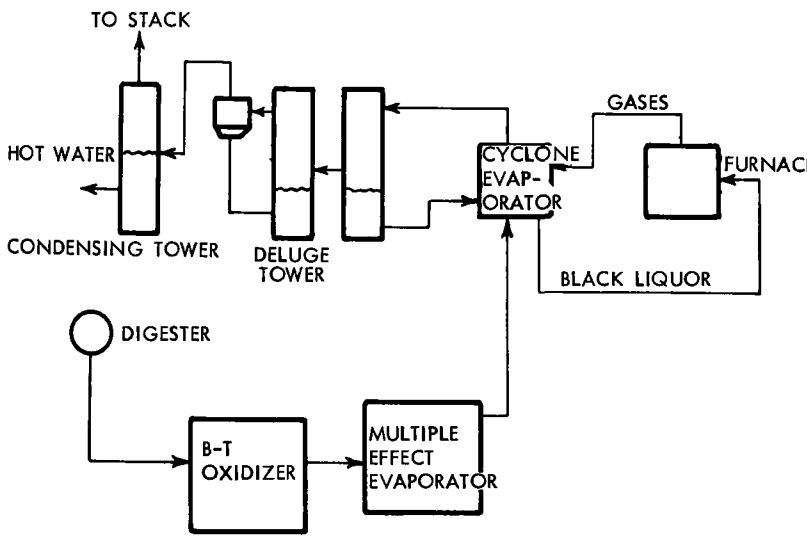


Figure 13. Schematic flow diagram of TBT recovery process.

125. Tomlinson, G. H., and G. H. Tomlinson II: **Recovery of heat and chemicals from black liquor.** *U. S. Patent 2,840,454.* Paper Ind., 40:550. 1948. A new recovery cycle process has been developed capable of recovering almost all the sodium sulfate fume in the stack gases and eliminating the noxious odors emitting therefrom.

126. Thompson, C. J., H. J. Coleman, C. C. Ward, and H. T. Rall: **Separation of organic sulfur compounds of liquid thermal diffusion.** *Anal. Chem.*, 29:1601-1611. 1957. The apparatus and procedure for thermal separation of sulfur compounds from petroleum products is given. Varying separation efficiencies were found for the different sulfur compounds from other sulfur compounds and from hydrocarbons. In some cases no separation could be obtained with the apparatus described.

127. Tremaine, B. K.: **Masking air-borne malodors; utilization of aromatic chemicals in industrial odor abatement.** *TAPPI*, 36:143A. Aug. 1953. Recently, several products intended for the masking of industrial odors have become available. These may be used in pulp mills in the following ways: Spray them into effluent streams, add them directly to the process, add them to scrubbing liquors, or spread them on contaminated surfaces. The cost of this type of measure was said to be about 10 to 25 cents per ton of pulp.

128. Trobeck, K. G., W. Lenz, and A. A. Tirado: **Air pollution control.** *Pulp & Paper Inter.*, Apr. 1959. This article is a report on the new TLT method of control of kraft mill odors, used at the Loreto and Pena Pobre mills near Mexico City. The method makes use of the conversion of mercaptans into hydrogen sulfide, which is further oxidized by means of air. From 1 to 3 kilograms of chlorine per ton of pulp is added to supplement the chemical treatment. Odor-masking agents are reported only partially effective. Black liquor oxidation eliminates several sources of noxious odors. The digester heat recovery system is an effective control for offensive compounds. The TLT system is described. Results of odor measurements are given.

129. Trobeck, K. G.: **The B-T system for soda and heat recovery in sulfate pulp mills.** *Paper Trade J.*, 130:40. Apr. 20, 1950. The B-T process, successfully used for over 6 years, is described. This system takes liquor from the evaporators and concentrates it with superheated steam at 400° C and 10 atmospheres pressure. The resulting saturated steam is recirculated to a superheater and repeatedly used as a drying agent. The concentrated liquor is then ejected into a vessel at 1 atmosphere. The resultant "steaming off" creates a solid containing only 15 percent water, which is then burned in the furnace. Advantages of this method are:

1. Less stack loss from steam in flue gases,
2. reduction of heating surfaces in the boiler.

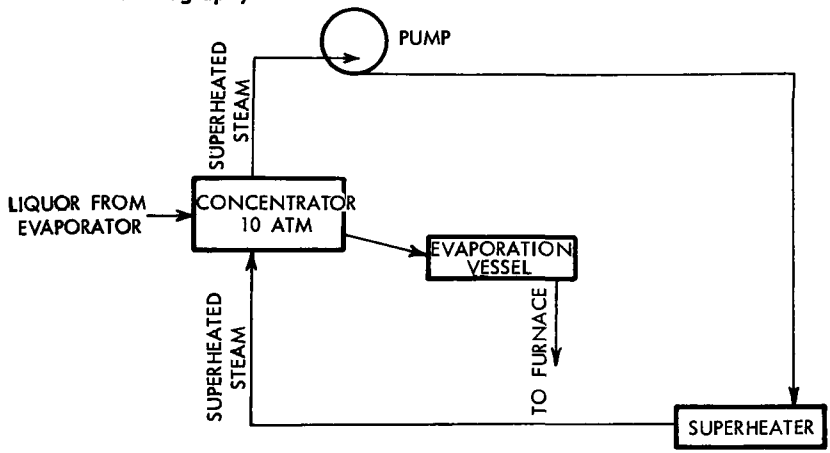


Figure 14. Schematic flow diagram of soda and heat recovery process.

130. Trobeck, K. G., W. Lenz, and A. Tirado: **Elimination of malodors in a kraft pulp mill.** *TAPPI*, 42(6): 425-432. June 1950. Experiences in the kraft pulp mill of Loreto and Pena Pobre indicate that only three sources of malodor will remain if the black liquor is properly oxidized. These are: Gases produced by the digesters, condensates also produced by the digesters, and gases delivered by the stack of the recovery boiler. An installation for the elimination of odors from gases and condensates from digesters, and one similar installation for handling gases going to the stack of the recovery boiler have been successfully operated in Loreto and Pena Pobre for about 1 year. Use is made of the reaction between chlorine and gaseous sulfur compounds. A preliminary treatment of the sulfur compounds with air in presence of water produced a definite saving of chlorine as well as some additional benefits. Results of tests to improve and clarify the different stages of the odor elimination system, including black liquor oxidation, are discussed.

131. Trobeck, K. G.: **Some data on the oxidation of black liquor.** *Paper Trade J.*, 135:27-31. July 4, 1952. It has been found that the high sulfur losses as hydrogen sulfide and mercaptans that occur in the evaporators of a kraft mill can be reduced by oxidation of the black liquor prior to its evaporation. For this purpose, several air oxidation units were set up in various Swedish plants to combine black liquor with air and produce a foam. This foam was then separated with a cyclone and converted to its normal liquid form by means of "foam-breaking" equipment. The black liquor, thereby oxidized, was then sent on to the evaporation units. Besides being effective in retaining sulfur, the oxidation systems have markedly reduced corrosion in various parts of the operations, especially in the evaporators. The sulfidity of the resulting white liquor was raised to an average of 28.74 percent. This is compared to a previous average of 26.16 percent. Trobeck believes that increased sulfur emissions from other operations, owing to the presence of the oxidation equipment, prevented the sulfidity from becoming even higher than the value obtained.

Table 41. AVERAGE TUBE LIFE IN EVAPORATOR (IN MONTHS)

| Effect | Unoxidized | Oxidized |
|---|---|---|
| 1 | 22.0 | More than 115 |
| 2 | 33.4 | More than 103 |
| 3 | 25.3 | More than 55 |
| 4 | 29.2 | More than 48 |

Table 42. EXPERIMENTAL DATA ON OXIDATION SYSTEM

| | |
|---|---|
| Liquor temperature, before oxidation | 190.4 °F |
| after oxidation | 185 °F |
| Air temperature, before oxidation | 68 °F |
| after oxidation | 183.1 °F |
| Concentration, before oxidation (% solids) | 16.1 |
| after oxidation (% solids) | 17.6 |
| Sulfide content, before oxidation | 0.35% |
| after oxidation | 0.07% |
| Air used, per short ton | 1,520 lb |
| Black liquor solids per ton of pulp | 2,800 lb |
| Total black liquor per ton of pulp | 17,400 lb |

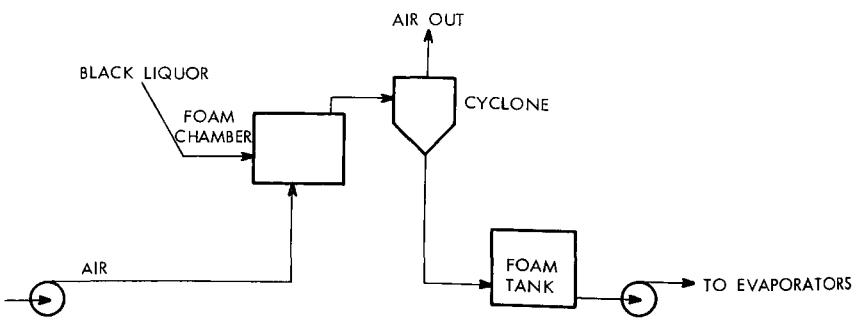


Figure 15. Schematic flow diagram of black liquor oxidation unit.

132. Von Bergen, J. M.: **Odor counteraction in kraft mill operations.** *Paper Mill News,* 77:120-158. July 3, 1954. A general discussion of public relations is given with special reference to the aspects of air pollution. The field of odor counteractant study is described, the present state of the art is indicated, and an experiment with a full-scale kraft mill is cited. The advantages and applicability of odor counteraction systems are discussed briefly. The author notes that a combination of two normally obnoxious odors may tend to counteract each other so that no strong smell is apparent. The chief advantage of odor counteraction is that it requires little expense and is relatively simple to apply.

133. Wagner, C. L.: **Alkali recovery from pulp liquors.** *Ind. Eng. Chem.,* 22(2):122-127. Feb. 1930. A new process for the recovery of alkali from wood pulp manufacture is described. This unit (furnace, boiler, induced draft fan, and scrubber) is almost identical in design to the soda and sulfate processes. Its function is to burn the volatiles and fixed carbons, secure absolute combustion, return the chemicals, re-use them in the most available form, and eliminate wastes, labor, dirt, smoke, and odors. The water scrubber was 87 percent efficient at loadings less than 1 grain per cubic foot and 69 percent efficient at loadings up to 2 grains per cubic foot. Emissions from furnace per ton of pulp amounted to: 30,400 pounds of air, 1,560 pounds of water, and 400 pounds of salt cake (sodium sulfate).

134. Wagner, C. L.: **Modern recovery in sulfate and soda mills.** *Paper Trade J.,* 89:82-83. Oct. 3, 1929. In the author's opinion, the Wagner recovery furnace is one of the most outstanding developments in pulp mill operations in the last decade. Developed by the J. O. Ross Engineering Corporation, this furnace utilizes several principles, i.e., centrifugal force, countercurrent sprays, and wet contact surfaces to remove and recover 97 to 98 percent of the effluent particulate matter. It is also successful in eliminating odor problems arising from hydrogen sulfide and mercaptans, which are destroyed upon introduction to the secondary combustion unit. The payback time of this unit, based on recovery savings is stated to be about 2 years.

135. Wells, S. D., and K. A. Arnold: **Kraft pulping with low sulfidity.** *Tech. Assoc. Papers,* 24:156-159. 1941. The benefits derived from the buffering action of the sulfide in a normal kraft liquor may be obtained by continuous injection of a liquor of low sulfidity during cooking. A marked reduction in mercaptans and other substances causing objectionable odors was noted during a cook with a liquor of low sulfidity.

136. West, P. H.: **Chemical and heat recovery with the venturi scrubber at Thilmany.** *TAPPI,* 38(7):399-402. July 1955. In 1946, a pilot plant venturi scrubber, using water to clean the recovery furnace flue gases, was tested at Thilmany; it showed chemical recovery efficiencies of about 90 percent. A similar full-scale unit, installed in 1947 following the then existing 120-ton recovery unit, substantiated these findings. Further pilot studies, employing concentrated black liquor instead of water, indicated improvement in heat recovery efficiency over that of conventional kraft recovery systems and maintenance of

a high degree of chemical recovery. In mid-1951, because of greatly increased pulp production and the demand for 600-psi steam, Thilmany purchased a new 250-ton B & W recovery unit equipped with a black liquor venturi scrubber. The decision to include the venturi as an integral part of the unit was based on several years of highly satisfactory performance from the water scrubber, the black liquor pilot unit, and from other considerations such as capital investment, space requirements, operation, and chemical and heat recovery. This entire unit, in operation since May 1953, shows chemical collection efficiencies of approximately 90 percent and heat recovery greater than normal.

137. West, P. H., H. P. Markant, and J. H. Coulter: **New venturi scrubber developments.** *TAPPI*, 44:710-715. Oct. 1961. In the interest of improving recovery of particulates from stack gases, the authors did extensive pilot level investigation of the operating characteristics of steam-atomized venturi scrubbers. This type of scrubber differs from those of the conventional type in that it utilizes steam to atomize the scrubbing liquor in the venturi throat. After the pilot test program, a plant-scale scrubber of a similar type was installed at the Thilmany Plant. This unit gave a 90 percent scrubbing efficiency for a conventional scrubber. This required 700 pounds of steam per hour, at a pressure of 50 psi, for a 100-ton-per-day pulp operation. Owing to the addition of this unit, the power requirements of the venturi fan and the scrubbing liquor pumps have dropped. The thermal efficiency of the boiler-scrubber combination has increased because of the reduction in temperature from 190 to 175° F as the gases passed through the venturi. The unit has operated satisfactorily since it was installed in 1960.

138. Woodward, E. R.: **Chlorine dioxide for odor control.** *TAPPI*, 36:216-221. 1953. It has been well established by other odor-producing industries that chlorine dioxide is a much more effective odor counteractant than either chlorine or oxygen. This compound has been successfully used to remove odorous compounds such as amines, mercaptans, and hydrogen sulfide. In view of these properties, it is suggested that chlorine dioxide be employed in the abatement of kraft mill odors.

139. Wright, R. H., M. A. Schoening, and A. M. Hayward: **The colorimetric determination of hydrogen sulfide and methyl mercaptan in sulfate pulp mill effluents and of sodium sulfide in black liquor.** *TAPPI*, 34:289-294. July 1951. A quantitative determination of hydrogen sulfide and methyl mercaptan has been developed that makes use of the reaction with Bindschedler's green, which forms methylene blue and a pink substance, respectively. There is little interference caused by the mercaptans in the determination of hydrogen sulfide. All hydrogen sulfide interference is eliminated in the methyl mercaptan determination by addition of cadmium chloride and use of a filter before the color is developed. A colorimetric determination of sodium sulfide in black liquor is also possible by this same general method. Adsorption of methylene blue by black liquor solids must, however, be prevented by addition of a cationic wetting agent to the reagent.

140. Wright, R. H.: **The dissemination of odors from kraft mill smoke stacks.** *Pulp & Paper Mag. Can.*, 56:131-134. Apr. 1955. Marked improvements have been made in our capabilities to control gases

emitting from digesters and evaporators. There still exists, however, the problem of emissions from the recovery furnace, which becomes largely one of atmospheric dispersion. Because of the logarithmic relationship between concentration and the relative odor of pollutants, the problem of odor reduction is difficult. It should be realized, however, that the fewer the pollutants emitted, the smaller the area that will be affected. The atmospheric dispersion equation of Sutton was used to analyze the behavior of smoke issuing from chimneys. From this study it was concluded that chimney design alone should rarely be sufficient to eliminate odor problems. The relative effectiveness of a stack is highly dependent upon surrounding terrain and weather conditions.

141. Wright, R. H., M. A. Schoening, and L. W. Shemilt: **The effect of black liquor fixation on the release of kraft odors.** *TAPPI*, 36:180-183. 1953. An experiment was conducted in which the normal black liquor supply of a kraft mill recovery system was replaced with oxidized liquor. Samples were taken at various locations throughout the process, and appropriate analyses of sulfur compounds were made. In spite of various operational difficulties encountered during the experiment, it was concluded that black liquor fixation is an effective factor in odor control.

142. Wright, R. H.: **The effect of packing type on the rate of black liquor oxidation.** *TAPPI*, 36:85. 1953. Oxidation of black liquor flowing over various types of packing was studied, and a method of scale-up to large columns from these data was proposed. The packing consisted of vertical sheets with various surface patterns designed to break up the flow pattern and increase the residence time in the column. It was stated that this type of packing possessed significant advantages in that it decreased foaming and improved the oxidation effectiveness.

143. Wright, R. H.: **It is possible to build and operate a completely odorless kraft mill?** *Can. Pulp and Paper Ind.*, Sept. 1957. The answer to the question of whether building and operating an odorless kraft mill is a realizable objective is only partly a technical one. Technically, a completely odorless mill is possible if management is prepared to pay the price. In discussing the technical aspects of building a completely odorless kraft mill, the author describes the kraft operating sequence, sources of dust emission, sources of odor release, and measures for the control of odors, and gives an outline of the needed research. Sources of dust emission listed are recovery furnace, lime kiln, and dissolving tank; control methods include electrostatic precipitators, bag filters, and scrubbers. Odor sources are digester gases, evaporator gases, furnace gases, and miscellaneous gases (digester loading, vents and pressure release valves, oxidation tower, brown stock washers, and others); measures for odor control include scrubbing, black liquor oxidation, condensation, burning, and oxidation with chlorine or ozone.

144. Wright, R. H.: **Kinetics of the oxidation of sulfate black liquor.** *TAPPI*, 35:276-280. June 1952. The oxidation rates of black liquor were studied at various temperatures between 40 and 90°C, and the reaction kinetics were analyzed on the assumption that oxidation occurs through several first-order reactions. The data were explained by the suggestion that one of these reactions has a relatively large rate

constant and goes to completion rapidly. When this reaction is almost completed, the slower reactions become more significant and dominate the conversion process from then on. Since reaction rates are relatively slow, it was suggested that, for a system exhibiting a moderate surface area, diffusion should become relatively unimportant as a rate-controlling factor. It was therefore hypothesized that any attempt to raise the surface area of contact equipment beyond a certain value should not appreciably increase black liquor oxidation rates.

145. Wright, R. H.: **New work in kraft mill odor control.** *Paper 62-99.* Presented at the annual meeting of the Air Pollution Control Assoc., Chicago, Ill. May 1962. The first significant progress in the odor control field was made about 20 years ago when it was discovered that the oxidation of black liquor rendered its volatile gases relatively odorless. This operation has been studied extensively in recent years. Recovery furnaces may also be a major emission source. This depends largely upon the operating conditions of the furnace. The common situation is the overloaded furnace that emits hydrogen sulfide in high concentrations. Several other substantial advances have been made in the field of pulp mill contaminant control, but these methods are by no means fully effective. Difficulties, such as the foaming tendency of black liquor, have reduced the applicability of some processes to below the point that might otherwise be expected. One encouragement is the increasing demand for the chemicals that are the by-products of recovery processes. The profitable sale of these chemicals may well give rise to a positive incentive for further control of pulp mill emissions.

146. Wright, R. H.: **Odor control in Canada.** *Pulp & Paper*, 26:89. Jan. 1952. In 1948 the British Columbia Research Council undertook an investigation of kraft mill odor control. Of special interest in this investigation was the black liquor fixation process, discovered some years earlier by Bergstrom and Trobeck. In kinetic studies of black liquor oxidation, it has been shown that chemical reaction rate is the controlling step of the process when the gas-liquid contact area is large. Also, a new type of tower packing has been designed for this process that is inexpensive and highly effective. A pilot-scale tower has been built and operated successfully for liquor rates of 5,000 pounds per hour. Noncondensable gases from the digesters have also been introduced to this tower, and have undergone a high degree of oxidation. This process has been investigated mainly for odor control purposes. But the increased sulfur retention of the black liquor, owing to the presence of the fixation tower, presents another attractive feature.

147. Wright, R. H.: **Odor counteraction.** *Chemistry in Canada,* Apr. 1958. The purpose of this paper is to examine evidence for the phenomenon of odor counteraction and to inquire whether, in the light of current theories of olfaction, it is a real effect. It is concluded that no significant evidence for the existence of a phenomenon of odor counteraction exists, and that current theories of the olfactory process lead one to expect that it would exist.

148. Wright, R. H., and R. W. Klinck: **What Port Alberni has done to control kraft mill odors.** *Paper Trade J.* 139:22-24. Oct. 10, 1955. On the basis of prior fundamental work on black liquor oxidation,

the British Columbia Research Council undertook the design of a full-scale unit for installation at the Port Alberni kraft mill of MacMillan and Bloedel Company, Ltd. This apparatus has been in operation for over a year, during which it has produced a marked reduction in the odor and, at the same time, has benefitted the mill operation in other ways, for example, by improving the sulfur recovery. The purpose of this paper is to give a short account of the equipment and the results it has secured. This is the first published report on the operation of this new odor reduction system, which not only controls recovery system odors but successfully absorbs objectionable digester gases.

149. Wright, R. H.: **Pulp mill odor control.** *Pulp & Paper Mag. Can.*, Dec. 1961. This short article reviews some of the more successful measures of odor control now in use. With black liquor oxidation, the release of odor from the multiple effect evaporators is practically eliminated. The first step toward control of digester gases is the installation of a heat recovery system that reduces the volume of uncondensed gas to manageable proportions. Several processes are now in use for treating both digester and furnace gases. These are discussed. It is clear from this discussion that no single, simple method of controlling and eliminating emission of odors exists. It is worth considering the cost of not containing the malodoous gases. Flue gases from a recovery furnace may carry 500 ppm or more of hydrogen sulfide. If 250 ppm is taken as a middle value, and reasonable assumptions as to gas flow and cost of chemical make-up are made, the odor from the flue gas alone represents a loss of $0.57 per ton of pulp produced.

150. Wright, R. H.: **Black liquor oxidation: View in '62.** *Paper Mill News*, Mar. 26, 1962. Black liquor contains alkali, lignin residues, sodium sulfide, and various organic sulfur compounds. Black liquor oxidation is a process in which the liquor is made to react with air to destroy the sodium sulfide and methyl mercaptan. The process reduces odors from the evaporators, conserves sulfur, and reduces corrosion in the evaporators. It is not a cure-all, but it does offer advantages in chemical economy and odor reduction that make it an integral part of a modern kraft mill. At present, the main obstacle to the universal adoption of the process is the problem of foaming that arises in mills cooking highly resinous woods such as pine. This problem is being actively studied and it will not be long before practical methods of dealing with it are found.

151. Wright, R. H.: **The reduction of odors from kraft pulp mills.** British Columbia Research Council, *Technical Bulletin No. 27.* 12 pp. This short report discusses making pulp by the kraft process, the malodorous substances and where they originate, the dispersal of odors in the atmosphere, and the principles of odor control. It emphasizes black liquor oxidation.

152. Young, D. J.: *U. S. Patent 2,115,835.* **Sulfate pulp process.** This process involves sweeping all air out of the digester prior to the cook, and then bleeding the air-free gases fom the digester and burning them while cooking is in progress.

153. Ziegelmeyer, F., and O. Feischl: **Oxidation of sodium sulfide in black liquor.** *Paper Ind.*, 40:324. 1958. The oxidation reaction of black liquor was studied, and the results indicated that the hypothetical equation

$2Na_2S + 2O_2 + H_2O = Na_2S_2O_3 + NaOH$ (minus 215 K cal) is valid. It was shown that the organic substances present in black liquor increase the oxidation rate 20- to 30-fold.

154. Zimm, F. P.: **Abatement of kraft mill odors.** *Paper Mill News,* 77:20-22. Aug. 14. 1954. The use of "reodorants" to counteract kraft mill odors is discussed. For normal operation, a kraft mill emits from 4 to 6 pounds of foul vapors per ton of pulp produced. The DuPont Alamasic line of reodorants has been about 70 percent effective in reducing these odors. Meteorological factors play an important role in the effectiveness of reodorants, and more or less of the deodorizing compound would be expected to be effective, depending on weather conditions and the time of day.

## SELECTED PAPERS

The following papers are reprinted with permission:

**Odor and fallout control in a kraft pulp mill.** G. A. Hansen. *Jour. Air Pollution Control Assn.* 12:409-413. Sept. 1962.

**Air pollution control activities associated with alkaline pulping.** E. R. Hendrikson. 18 pp. Unpublished, ca. 1960.

**Is it possible to build and operate a completely odorless kraft mill?** R. H. Wright. *Can. Pulp and Paper Ind.*, Sept. 1957.

**New work in kraft mill odor control.** R. H. Wright *Paper 62-99.* Presented at the annual meeting of the Air Pollution Control Assn., Chicago, Ill. May 1962.

# ODOR AND FALLOUT CONTROL IN A KRAFT PULP MILL

G. A. Hansen *

## ABSTRACT

A brief description of the source and nature of odors and fallout released in the kraft pulping process is presented. Development and installation of operating equipment to reduce both odor and fallout around a modern kraft pulp mill are described. Among the processes for control are (1) collection and destruction of relief and blow gases, (2) black liquor oxidation, and (3) recovery furnace and lime kiln control to suppress odor release. Flyash control with an electrostatic precipitator followed by a Venturi-type, water-spray scrubber is also described.

## INTRODUCTION

If this paper on kraft pulp mill air pollution control had been written 10 years ago, the discussion would have been quite limited. As a matter of fact, there would have been no paper because none of the techniques and processes presented here were being used on a mill scale by the Weyerhaeuser Company or any other company at that time; some were not even in the laboratory stage yet.

Since the time the first kraft mill was built back in 1891, the men who operated these mills were well aware of the fact that they had an air pollution problem. The first papers concerning kraft mill odor problems appeared in the literature around 1900. Today, even with all of the progress in recent years, most kraft pulp mills are still living with this problem. We at the Weyerhaeuser Company are the first to admit that our various systems will not completely eliminate the kraft mill odors or fallout. However, they will reduce by up to 90 percent or more all odor and flyash released to the atmosphere. We feel that this is a significant improvement. Through constant research, we are continuing our efforts to further reduce that remaining 10 percent. This will not be easy, I can assure you.

Before discussing the actual plant installations, a brief discussion of the scope of the problem is in order as there are actually two phases to our Kraft Mill air pollution problem: (1) odor and (2) flyash. In the

*Technical Director, Weyerhaeuser Company, Pulp and Paperboard Division, Kraft Mill, Everett, Wash.

case of the Weyerhaeuser Kraft Mill at Everett, Washington, these problems were made doubly acute because, over the years, a residential area encroached upon the industrial area where our sawmills are located. For efficiency of operation, it is essential to locate a pulp mill adjacent to its wood supply, which, in this case, was our two sawmills. This meant that we had private homes within one block of our Kraft Mill building site. Therefore, when the Kraft Mill was built in 1953, the latest and most efficient air pollution control equipment was installed. Furthermore, as new techniques and new equipment were developed they were put to use immediately.

## SOURCES OF ODOR

The kraft mill odor problem arises from the use of sodium sulfide ($Na_2S$) as one component of the pulping liquor. This normally amounts to about one-third of the active pulping chemical charge; caustic soda (NaOH) constitutes the other two-thirds. In the digesters, the sulfide ion from the sodium sulfide combines with various organic side-chain radicals from the cellulose and the lignin of wood chips to form such organic sulfides as methyl mercaptan ($CH_3SH$), dimethyl sulfide ($CH_3SCH_3$), dimethyl disulfide ($CH_3SSCH_3$), and small amounts of similar ethyl sulfide compounds.[1] In addition, hydrogen sulfide is formed in considerable amounts. To give you an idea of the quantities involved, Table 1 shows the pounds of the three major odorous compounds released per ton of wood for various cooking conditions. Since the yield of unbleached pulp is about 45 percent based on Cook No. 2 from Table 1, we can see that there would be about 6.2 pounds of combined sulfur compounds released per ton of pulp produced. Since all of these compounds are objectionable in concentrations as low as 1 ppm, a 300-ton-per-day kraft mill pollutes a lot of air if these are released to the atmosphere. In mills using black liquor oxidation and with closely controlled recovery furnace operations, these digester blow and relief gases are the major sources of odor release.

Table 1. VOLATILE SULFUR COMPOUNDS FROM PILOT PLANT COOKS

| Cook no. | Max temp, °C | Total cooking time, hr:min. | Active alkali, % | Sulfidity, % | Sulfur compounds [a] | | | |
|---|---|---|---|---|---|---|---|---|
| | | | | | $H_2S$ | $CH_3SH$ | $(CH_3)_2S$ | Total |
| 1 | 172 | 3:45 | 18 | 0 | 0 | 0 | 0 | 0 |
| 2 | 172 | 3:45 | 16 | 22.5 | 0.29 | 1.60 | 0.88 | 2.77 |
| 3 | 172 | 3:45 | 16 | 18 | 0.25 | 1.29 | 0.99 | 2.53 |
| 4 | 172 | 3:45 | 19 | 18.5 | 0.18 | 1.25 | 0.88 | 2.31 |
| 5 | 150 | 5.30 | 20 | 20 | Traces | 0.29 | 0.17 | 0.46 |
| 6 | 160 | 4·00 | 20 | 20 | Traces | 0.35 | 0.35 | 0.70 |
| 7 | 170 | 4:00 | 16 | 20 | | 1.15 | 0.74 | 1.89 |
| 8 | 182 | 3:00 | 16 | 20 | | 1.49 | 1.25 | 2.84 |
| 9 | 172 | 3:00 | | | | 0.15 | 0.05 | 0.2 |

[a] Lb ton O D wood.

Until the recent introduction of the continuous digester, wood pulping had been a batch process. Generally, all kraft pulping processes follow

essentially the same steps as shown in Figure 1, which is a flow sheet of the batch process used at the Weyerhaeuser Company's Kraft Mill in Everett, Washington. As a result, release of blow and relief gases is intermittent and somewhat erratic. Attempts to burn these gases directly from their points of discharge have met with limited success. Relief gases are released at irregular intervals throughout the 3-hour cooking cycle. Although the amount of relief gas is relatively small, it contains most of the odorous gases. In addition it normally carries with it a substantial quantity of turpentine from the wood resins. All of these materials are extremely flammable. Mixed with the proper ratio of air, they are explosive. Without a proper collection system, burning of these organic-rich gases has proved hazardous. The blow gases, on the other hand, contain less of the foul gases but are released in large volumes. In our Everett plant, we blow a digester approximately every 40 minutes, with a total release of about 8,000 cubic feet of blow gases, relief gases and steam. To successfully "deodorize" the kraft pulping process, these gas streams must be contained and treated.

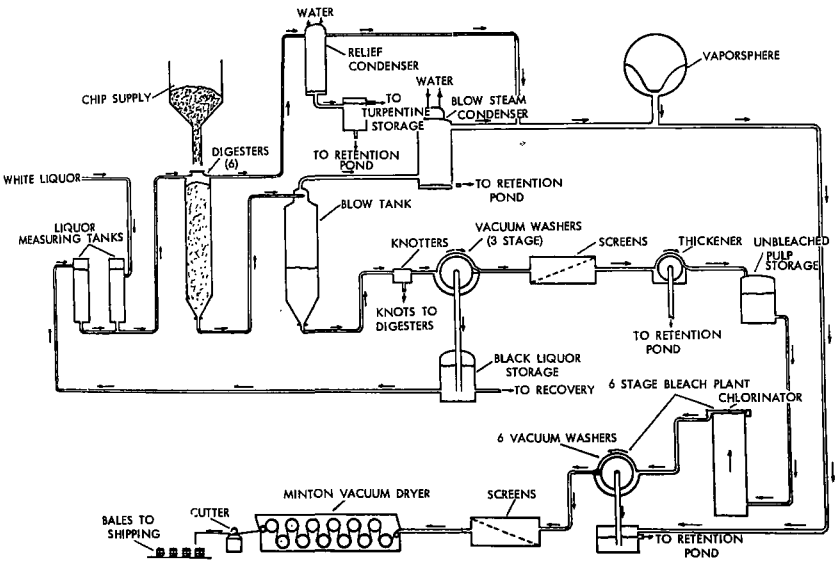


Figure 1. Everett kraft mill pulping and bleaching system.

As indicated above, early attempts at burning these gases met with limited success to say the least. Many recovery furnaces and lime kilns have been severely jolted with gas explosions, some resulting in serious damage, when these gases were introduced directly to the firing zones of these units.

In spite of such setbacks, Weyerhaeuser approached the odor problem from the theory that the only logical answer was to destroy the odorous materials, not to mask them with costly perfumes. After much experimentation, including a full-scale pilot plant trial using World War II surplus barrage balloons as gas collectors, a suitable gas container was selected.

Chicago Bridge and Iron Works had available a low-pressure gas container called a "Vaporsphere." This gas accumulator is a steel sphere with a lightweight fabric diaphragm attached inside at the middle. The gas enters through the bottom and is retained under the diaphragm which "floats" up and down on the gas cushion. Both the blow gases and relief gases are collected in this system. As the Vaporsphere fills, an automatic valve opens to discharge just enough gas to equal the net flow generated for each cooking cycle; it then closes again. The entire system is carefully sealed to keep out all air dilution. In other words, we eliminate the explosion hazard by keeping oxygen out of the gas mix in the storage system.

Our main problem has been to find a diaphragm fabric that would resist the conglomeration of organic chemicals discharged into the Vaporsphere. Plastics, rubber, miracle fabrics—none of these would withstand the attack, until Du Pont developed Mylar. With a film of Mylar sandwiched between two layers of cotton ticking, we have now had diaphragms which have lasted over 27 months. The cost on this basis is but a fraction of a cent per ton of pulp produced. This low cost factor is important when comparing this system to the cost of some of the reodorants and masking chemicals being offered which are only partially effective in eliminating objectionable odors in the first place.

Containing these obnoxious gases is only the first step in solving our problem. Next, we must dispose of the gases safely and economically. While we were experimenting with the barrage balloons as gas containers, a local airplane pilot volunteered to haul them up into the sky to dump them. Although he was apparently quite serious in his offer, we felt there was a better way.

Since the initial work on this problem was done at Springfield, Oregon, where we operate an unbleached board mill, I will first describe their system for burning the accumulated gases. Originally, the collected relief and blow gases were piped to an Anthony furnace designed to withstand relatively severe explosions. Just before discharging the gases into this furnace, they were diluted with air at a ratio of more than 50:1. This transition from no air to an excess of air kept the gas-air mixture from being in the explosive range except for just the instant when the air was added. When the gas-air mixture entered the furnace, which was operated at 1400° F., complete combustion of the organic sulfides and the hydrogen sulfide to $CO_2$, $SO_2$ and $H_2O$ took place. Only when the furnace temperature dropped below 900° F. did any odorous compounds pass through unburned.

After several years' experience with the Anthony furnace, the system was shown to be practical and safe. Today, these combined digester gases are being piped to the combustion chamber of the lime kiln, where they are burned (Figure 2). Since the firing end of the lime kiln operates at a temperature exceeding 2000° F., it is more than adequate for incinerating the foul gases. Moreover, the heat value of these gases, although small when compared to the total requirements of the lime kiln, is put to a useful purpose. Coleman[3] has described this system in detail in the October 1958 issue of *TAPPI* magazine.

Where bleached kraft pulp is being produced, a simple, safe, wet oxidation of the combined relief and blow gases can be practiced. Normally, the first step in bleaching wood pulp is a chlorination stage. With

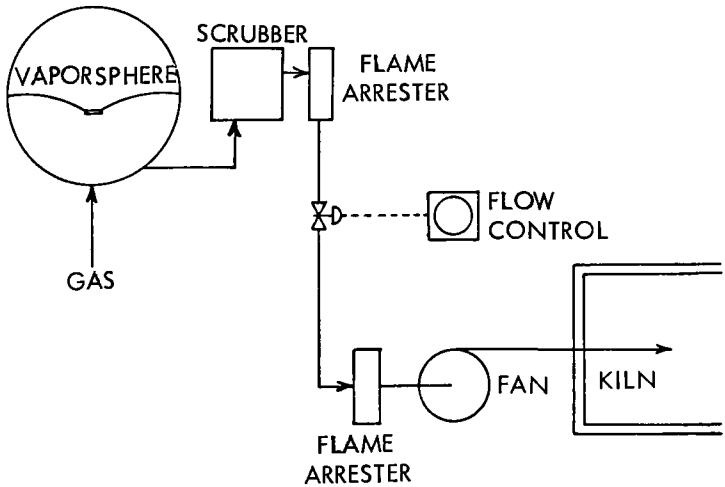


Figure 2. Burning of digester blow and relief gases.

kraft pulps it is customary to use 10 to 20 pounds excess chlorine per ton of pulp in this stage. Being a powerful oxidizing agent, chlorine readily oxidizes organic sulfides and hydrogen sulfide to free sulfur, sulfonyl or sulfoxy compounds.[1] The threshold of detection for these compounds is several hundred times as great as the original sulfides. Thus, by judiciously bleeding our foul gases from the gas-accumulation system into the dropleg of the chlorination washer we can utilize the excess chlorine to destroy the obnoxious gases, as shown in Figure 1. This system has been used with success in our Everett mill since we first went into operation in 1953.

## RECOVERY FURNACE

Odor release is not confined to the pulping operation in a kraft mill. The superior economy of the kraft process is based on recovery of the pulping chemicals for re-use. During the cooking cycle virtually all of the caustic is used up in the digesters, but only about two-thirds of the sodium sulfide is used—with one-third remaining in the spent liquor. When I say "used up," I should say that these chemicals have reacted with acidic groups or phenolic radicals of lignin to make these lignins soluble. To reclaim these chemical components, it is necessary to concentrate the spent liquor and then burn the organics (lignin and wood sugars) for fuel. Salt cake ($Na_2SO_4$) is added to the concentrated black liquor before it is sprayed into the furnace. Carbon from the organics reduces the sodium sulfate to sodium sulfide in the furnace bed. Thus, the "ash" from the furnace is a molten mixture of sodium carbonate and sodium sulfide, which is drained off and dissolved in water. Lime is added to the solution to convert the sodium carbonate to sodium hydroxide. We then have our

cooking liquor components again. This, of course, is a simplified explanation of what goes on in a recovery system; however, it will serve our purpose here. Figure 3 is a schematic presentation of the system used at the Everett Kraft Mill, which is virtually the same in every kraft mill with the exception of the odor control systems utilized by our Weyerhaeuser mills.

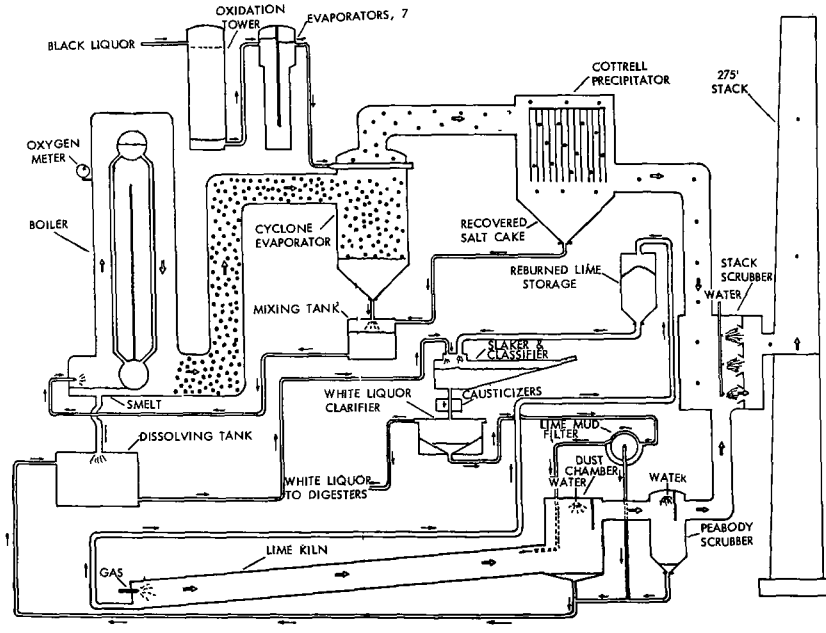


Figure 3. Everett kraft mill recovery system.

In evaporating the spent liquor, multiple effect evaporators can be used effectively to go from around 15 percent solids up to approximately 50 percent. For efficient furnace operation, it is necessary to further evaporate the black liquor to 60 percent solids or more. Normally, this is accomplished with some type of surface-contact evaporator using hot flue gas for the evaporating medium. We use a cyclone-type evaporator at Everett, while a cascade-type evaporator is used at Springfield.

As you know, carbon dioxide is one of the principal products of combustion. When this comes in contact with sodium sulfide in water—such as happens in the contact evaporators described above—sodium carbonate is formed and hydrogen sulfide is released. This is precisely what happens in any kraft mill recovery unit not using oxidized black liquor. In a 300-ton-per-day kraft recovery furnace, this escapement of hydrogen sulfide might approach 5,000 pounds per day.

Two techniques are practiced in Weyerhaeuser kraft mills to prevent loss of sulfur from black liquor, both in the contact evaporators and in the furnace itself. The principle of oxidizing residual sulfides in black liquor through contact with oxygen from the air in a packed tower has

been known for some time. However, attempts to apply the conventional countercurrent flow of air up through a packed tower generated uncontrollable foam problems as the black liquor was discharged from the bottom of the tower. Modifying the oxidation tower to pass both the black liquor and the air concurrently down through the packed tower, as described by Bialkowsky and DeHaas,[2] reduces foam formation to the point where a simple foam tank suffices to allow the foam to decay. Although the oxidation product has not been identified to my knowledge, the important thing is that the oxidized sulfur compound is retained in the black liquor until it is again reduced to sodium sulfide in the reducing zone of the recovery furnace.

In addition to black liquor oxidation, our recovery furnace is equipped with a two-pen, Bailey recording instrument to monitor both oxygen and combustibles continuously in the flue gas leaving the furnace. DeHaas and Hansen [1] have shown that where furnace drafts are controlled to maintain 2 to 3 percent oxygen and less than 0.5 percent combustibles in the flue gas, malodorous sulfur compounds can almost be eliminated.

The combination of black liquor oxidation and controlled oxygen in the flue gas has reduced sulfur emission from around 5,000 pounds per day to less than 500 pounds. Under ideal conditions, we have been below 100 pounds per day.

## LIME KILN

One other source of odor release in a kraft mill is the lime kiln. When the recovery furnace "ash," or smelt, is dissolved in water, one main product is sodium carbonate; the other is sodium sulfide. The sodium carbonate is converted to sodium hydroxide by adding quicklime (CaO) to the dissolved smelt. In the resulting reaction, calcium carbonate forms and precipitates. In some older mills this may be discarded; but, most modern mills feed the wet lime mud into a rotary lime kiln and reburn the calcium carbonate to calcium oxide and carbon dioxide. A small amount of sodium sulfide from the smelt carries into the kiln in the lime mud. Again, the carbon dioxide in the kiln gases (released from both the lime mud and the kiln fuel) will release hydrogen sulfide from the sodium sulfide unless care is taken to prevent it. The control technique is the same as for the recovery furnace: keep an excess of oxygen in the flue gas. Therefore, the kiln operator is also equipped with a recording oxygen meter to monitor the oxygen level in the exit gas from the kiln.

## FLYASH FALLOUT PROBLEM

The second phase of a kraft mill air pollution problem concerns particulated material—in other words, flyash which is discharged with the flue gas. Even though the Everett Kraft Mill was built with the best combination flyash removal system available in 1953, there was still a noticeable emission of flyash in our flue gas. In 1955 we turned our attention toward either adapting an existing system or developing a new system to further reduce air-borne flyash from our recovery furnace stack.

When the Everett Kraft Mill was built, it came equipped with a cyclone-type, surface-contact evaporator. This was followed by a Cottrell precipitator manufactured by the Western Precipitation Corporation. As illustrated in Figure 4, this arrangement removed about 97.5 percent of the flyash leaving the furnace. Under normal operating conditions in a 300-ton-per-day recovery furnace, this would mean roughly 150,000 pounds of flyash entrained in the flue gas leaving the furnace unit. Of this, about 75,000 pounds would be retained in the cyclone evaporator, 71,250 pounds would be removed by the Cottrell precipitator and, if no other treatment were made, 3,750 pounds would be lost to the atmosphere. Fortunately, kraft mill fallout consists primarily of sodium sulfate and sodium bicarbonate, with minor amounts of sodium chloride and sodium

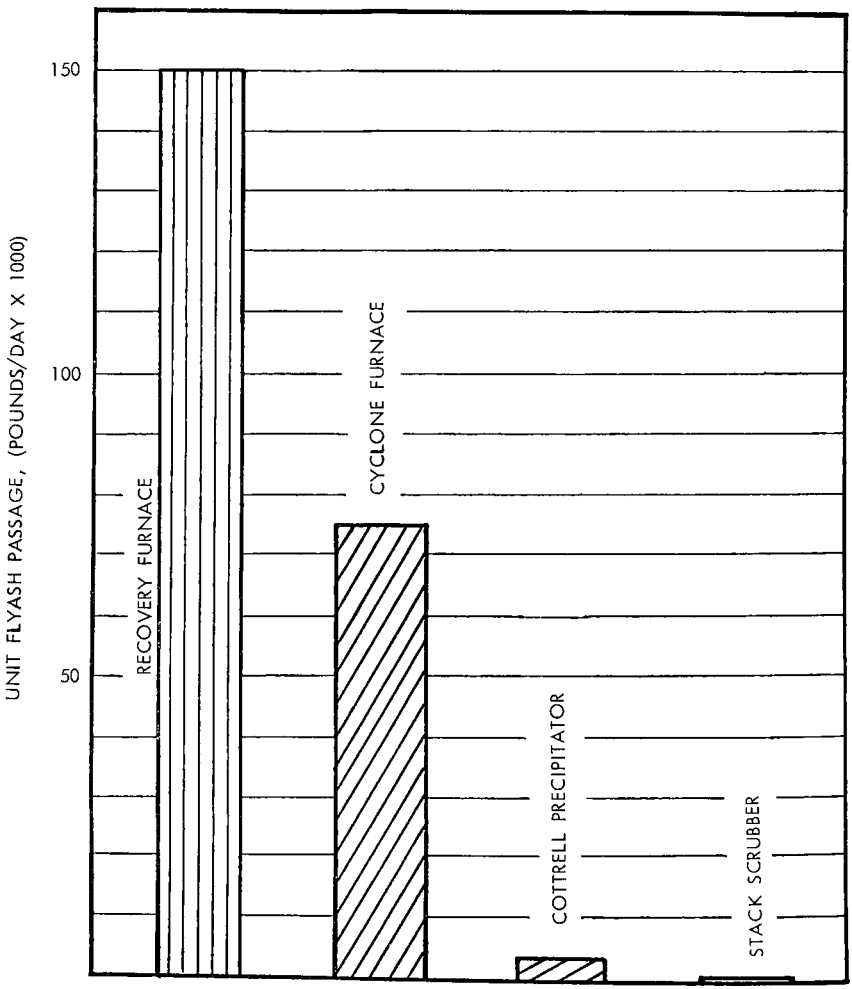


Figure 4. Stepwise removal of flyash from recovery furnace flue gas.

carbonate, all of which are nontoxic in the amounts present. They did, however, constitute a nuisance in the immediate area around the mill. Even though the adjacent residential area had developed within a zoned industrial area, the presence of our Kraft Mill flyash was generating some loss of community good will. We decided to see what could reasonably be done about the problem.

Other mills were facing the same problem. One kraft mill at Antioch, California, put in a second electrostatic precipitator in the gas stream following the first unit. As far as I know, this has been effective; however, this unit is quite expensive. Other mills have added Venturi-type mixers to bring black liquor in intimate contact with the flyash and, thus, remove it. This is also effective but, in addition to being expensive to install, this unit has a high power requirement for operation. After considering various existing techniques for the removal of flyash, we decided to evaluate gas-scrubber systems on a pilot plant scale.

Ultimately, we developed our own version of a Venturi-throated scrubber, which operates on water. Murray[4] described the evaluation and selection of this unit in the November 1960 issue of TAPPI. This system provides no chemical recovery and it requires about 2 million gallons of water daily. It is, however, much less expensive to build and to operate than systems designed to salvage the small amount of chemicals involved. The value of the flyash could not justify the installation of the larger, more complex recovery systems. Figure 4 illustrates flyash removal from the furnace through the scrubber.

That our installation is effectively reducing flyash losses to a minimum has been shown in two ways. As part of our program, we installed a permanent sample line to the top of the recovery furnace stack. During each shift, recovery plant personnel test stack gases for sodium salt losses. Since virtually all of our flyash components are sodium salts, we have found it convenient to compare our losses in terms of pounds of sodium per day. On this basis, sodium losses before the scrubber installation are compared in Table 2 with sodium losses after the scrubber installation. Per cent removal is also indicated. Figure 5 shows graphically, by year, the average sodium fallout at the filter plant station. As indicated by the dotted line, there is a background fallout of about $1.6 \times 10^{-5}$ ounces per square foot per day even when the Kraft Mill is not operating. The addition of a supplementary I.D. fan ahead of the scrubber accounts for the improvement in 1958 over 1957.

Table 2. EFFECT OF RECOVERY STACK SCRUBBER ON FLYASH DISCHARGE

| | Sodium loss | | |
|---|---|---|---|
| | Before | After | Reduction, % |
| Recovery stack emission, lb /day | 3,000 | 300 | 90 |
| Fallout at filter plant, oz /ft$^2$/day [a] | $44 \times 10^{-5}$ | $3.6 \times 10^{-5}$ | 92 |

[a] Includes a background fallout of $1.6 \times 10^{-5}$ oz /ft$^2$ per day, which is present even when the Kraft Mill is not operating.

With the recovery stack scrubber effectively controlling flyash from that source, there was another, less severe, problem at the lime kiln stack.

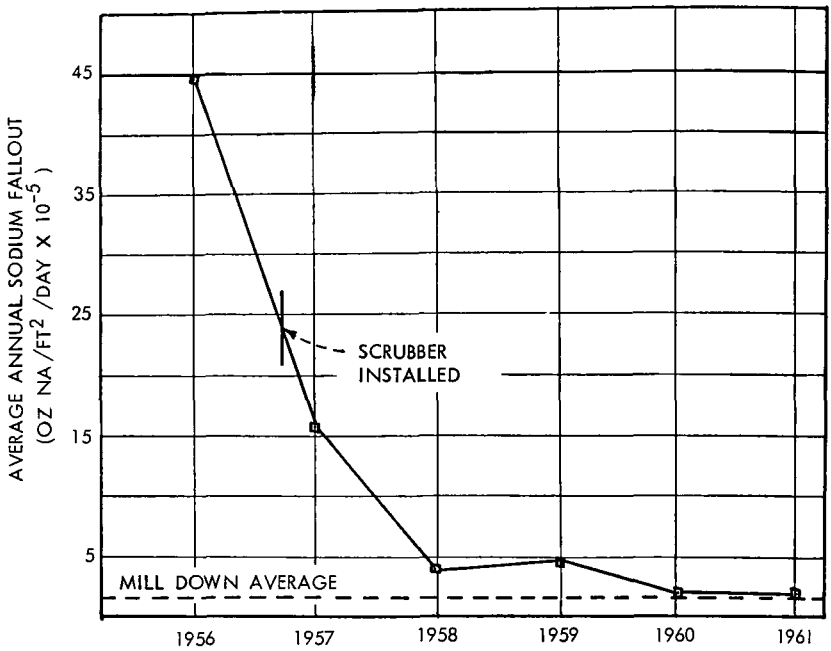


Figure 5. Effect of scrubber on sodium fallout, filter plant station.

Our lime kiln has been equipped with a Peabody scrubber from the very beginning of operations. However, periodic tests showed that the Peabody unit removed virtually 100 percent of the lime dust but there was an appreciable escapement of sodium salts. Without too much effort, we could add the lime kiln stack gas to the existing recovery stack scrubber. It was felt that the extra 11,000 cubic feet per minute could be handled without upsetting the effectiveness of the unit. This was done, and with gratifying results. Normal sodium losses through the Peabody scrubber had been in the neighborhood of 1,000 pounds per day. The addition of these gases to the recovery stack only increased sodium losses from the main stack from 300 to 400 pounds per day. This resulted in a further net gain of 900 pounds of sodium removed from the atmosphere.

Prior to the scrubber installation, we were losing 3,000 pounds of sodium per day from the recovery furnace system and about 1,000 pounds per day from the lime kiln. The scrubber reduced these losses to a total averaging about 400 pounds per day. This amounts to approximately 90 percent reduction in flyash. After we have completed installation of a heat exchanger to recover waste heat from the scrubber recirculation water, we hope to improve this efficiency somewhat. Tests have shown that the colder the scrubber water is, the more effectively it operates. We hope to squeeze our sodium emissions to less than 200 pounds per day.

## SUMMARY

To summarize, I have described the general odor-control systems currently being used in two Weyerhaeuser kraft mills. The systems are practical from a cost standpoint and are reasonably effective, although we do not claim them to be the ultimate answer to the problem. These systems are based on collecting and destroying the malodorous compounds by burning or by chlorine oxidation in the case of digester blow and relief gases. In the recovery furnace and evaporators, release of odors is prevented through black liquor oxidation and by carrying excess oxygen in the recovery furnace flue gas.

Flyash at the Everett Kraft Mill has been reduced effectively by combining lime kiln and recovery furnace flue gases before passing them through a modified Venturi scrubber. Particulate matter discharged, as measured by sodium concentration in the flue gas at the top of the stack, has been reduced over 90 percent. This is confirmed by fallout samples taken in the vicinity of the mill itself.

Perhaps the most effective evaluation of odor or fallout abatement programs is the complaint department. Inasmuch as the installation of the systems described has reduced complaints to the vanishing point, we feel reasonably certain that they are effective.

## REFERENCES

1. G. G. De Haas and G. A. Hansen, "The Abatement of Kraft Pulp Mill Odors," *TAPPI*, 38, 732-738 (December 1955).
2. H. W. Bialkowsky and G. G. De Haas, "Stabilization of Douglas-Fir Kraft Black Liquor," *Paper Mill News*, 74, 14-22 (September 1, 1951).
3. A. A. Coleman, "The Combustion of Non-Condensable Blow and Relief Gases in the Lime Kiln," *TAPPI*, 41, 166-168A (October 1958).
4. J. S. Murray, "Scrubbing Kraft Recovery Furnace Gases," *TAPPI*, 43, 899-902 (November 1960).

# AIR POLLUTION CONTROL ACTIVITIES ASSOCIATED WITH ALKALINE PULPING

E. R. Hendrickson, Ph.D.*

## ALKALINE PULPING

Of the nearly 25 million tons of wood pulp produced in this country each year, somewhat more than half is manufactured by an alkaline process. The original alkaline process for producing pulp from wood was the so-called soda process developed in England about 1854. Essentially this method

*Air Pollution Research Laboratory, University of Florida

consisted of cooking wood chips in a solution of sodium hydroxide under high pressure. A modification of the soda process is still practiced in this country to a limited extent. Dahl, about 1890, began investigations to improve on the basic soda process. His studies led to the development of what is known as the sulfate process, in which a cooking liquor consisting essentially of sodium hydrosulfide and sodium hydoxide reacts with the wood chips in a high-pressure digester. At the present time by far the majority of wood pulp produced in this country is manufactured by the sulfate process. Both of these alkaline pulping methods have one thing in common, in order to be economically feasible the cooking chemicals must be recovered. Recovery of the spent cooking liquors, while reducing those materials commonly discharged to a stream, may result in an increase of those materials discharged to the air. Gases and vapors, as well as solid and liquid particulates discharged into the air in the vicinity of pulp mills, have resulted in numerous complaints from people living in the vicinity. The industry, through its organization known as the National Council for Stream Improvement, has undertaken support of an extensive program of research into the air pollution problems which face the industry. These research programs are presently underway at the University of Florida and at Washington State University. Because of the relative importance of sulfate pulping and because of the peculiar problems involved, this portion of the industry is being studied first.

Briefly (Figure 1), the process of producing pulp by the sulfate method consists of placing wood chips into large digesters along with the cooking liquor and heating to about 350° F and 115 pounds pressure

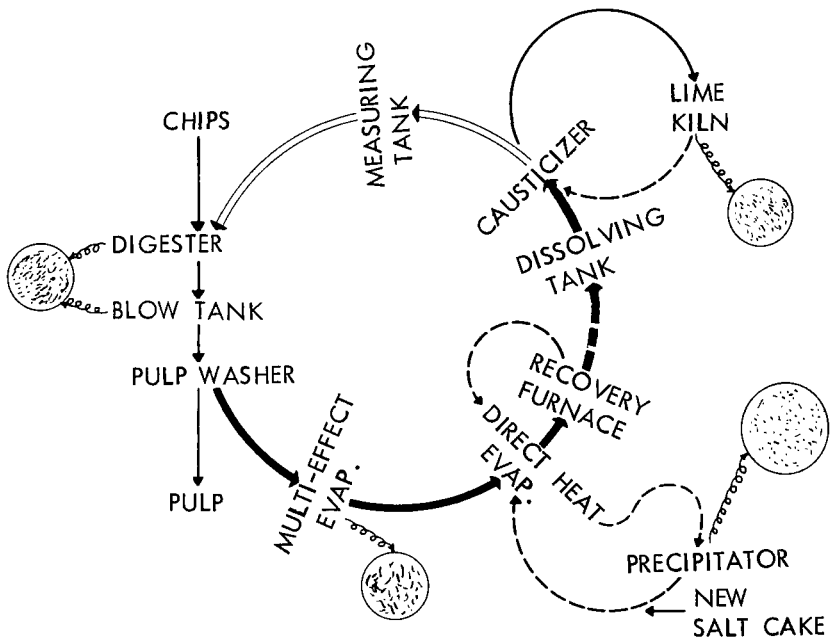


Figure 1. Odor release in the kraft process.

for up to 8 hours. Following the digestion period, the material is dumped into a blow pit or blow tank, where the liquor is drained from the pulp. This liquid. together with the first wash water is known as **weak black liquor** and contains the spent reagent and about half of the wood constituents. As mentioned previously, an essential part of the sulfate process is recovery of chemicals from the cooking liquors. Modern day practice calls for concentrating the weak black liquor in multi-effect evaporators and direct-heat evaporators before burning in a recovery furnace to generate steam and to recover the cooking chemicals for re-use in the process. Make-up and recovered saltcake is added prior to the direct-heat evaporators. Reducing conditions are maintained in the lower part of the furnace and the carbonaceous materials are burned off. The resulting smelt consists essentially of sodium sulfide and sodium carbonate. When this smelt is dissolved in water it results in a **green liquor** in which the sodium sulfide is converted to sodium hydroxide and sodium hydrosulfide. Since the sodium carbonate is inert as far as the cooking liquor is concerned, it is causticized by the addition of lime to convert the sodium carbonate to sodium hydroxide and precipitate calcium carbonate. The calcium carbonate is recovered in a lime kiln for re-use in the causticizing process. The causticized solution, called **white liquor,** is ready for use in cooking. Before the digester is charged with the white liquor, a quantity of black liquor is frequently added to it.

## AIR POLLUTANTS

From this brief description of the process, it would appear that the three major sources of air-borne emissions are from liquor preparation, cooking, and chemical recovery, and that both particulates and odorous gases might be involved. Actually the air-borne wastes from sulfate pulping consist mainly of:

1. Solids from the:
   (a) Recovery furnace, composed of sodium sulfate and sodium carbonate plus carbon particles.
   (b) Lime kiln, composed essentially of lime dust.
   (c) Power plant, composed of flyash, soot, or unburned bark, depending on the fuel used.
2. Mists from the:
   (a) Recovery furnace.
   (b) Lime kiln.
   (c) Dissolving tank.
   (d) Causticizer.
   (e) Digester.
   (f) Blow tank.
3. Odorous and nonodorous gases from the:
   (a) Recovery furnace, composed essentially of sulfur dioxide and hydrogen sulfide.
   (b) Lime kiln, containing smaller quantities of the same two gases.
   (c) Power plant, consisting of sulfur dioxide if the furnace is being operated properly.

(d) Digester relief, containing inorganic and organic sulfur compounds, such as hydrogen sulfide, methyl mercaptan, dimethyl sulfide, and dimethyl disulfide.
(e) Blow tank, containing the same compounds.
(f) Turpentine recovery.
(g) Evaporators, consisting of hydrogen sulfide, methyl mercaptan, dimethyl sulfide, and dimethyl disulfide.

Other sources are active, but those mentioned are believed to be the major ones. In terms of volume, the off-gases from the recovery furnace make this the major source. Digester relief gases, blow gases, and the off-gases from the evaporators represent a considerable smaller volume, but have a potentially higher nuisance value.

## EFFECTS OF POLLUTION

The possible effects of air-borne emissions from sulfate pulping are numerous (1). In the immediate vicinity of mills, objections are frequently raised about the effects of fallout from recovery furnaces, lime kilns, and bark burners. Vegetation damage has been attributed to fallout and sulfur dioxide. Damage to structural materials and painted surfaces has been reported from air-borne saltcake particles and various sulfur-containing gases. Lead base paint may be blackened in the presence of a sufficient concentration of hydrogen sulfide under specific conditions. Fallout, of course, may be in the form of saltcake, flyash, soot, burned bark and wood particles, and lime. As mentioned, some of these actually do damage to materials, vegetation, and painted surfaces. Others merely contribute to the general dirtiness of the surrounding area. The larger particles are usually deposited close to the source, but smaller particles may be carried several miles. Those which remain suspended in the air contribute to visibility interference, sky darkening, interference with transportation services, and may help to carry odors long distances.

Health hazards from concentrations of gases found in the area around sulfate pulping operations are not considered to be of serious consequence. Of the compounds which might be involved, the toxicity of sulfur dioxide and hydrogen sulfide are well known, but little is known about the true air pollution signatures of sulfate pulping: mercaptans, dimethyl sulfide, and dimethyl disulfide. The limited data presently available indicate that hydrogen sulfide is about ten times as toxic to rats as disulfide and mercaptan. From observations on the concentration of hydrogen sulfide in the vicinity of sulfate pulping operations, it has been tentatively concluded that toxic gases are not at sufficient concentration in the vicinity of such operations to justify air pollution control on the basis of health hazards. Although no disease or infirmity has been proved to be directly caused by odors per se, odors in the vicinity of pulping operations are considered unhealthy by the uninformed. At least they are considered obnoxious by many people, and as such, they might be held to constitute a nuisance. If a recent court decision starts a trend in this direction, the encroachment of odors on private property could be considered trespass. It is known that under appropriate weather conditions, which fortunately are not present all the time, the odor from sulfate pulping may be noticeable many miles away.

Paint damage in the form of discoloration by hydrogen sulfide is one of the most common complaints around sources of this gas. Recent investigations by the paint industry have thrown some additional light on the blackening effects of hydrogen sulfide. It might be well to point out that many master painters, paint salesmen, and paint manufacturers still hold that a lead-pigmented paint is necessary for the best outdoor coating. Most fume-resistant paints contain titanium oxide as the main pigment, but many of the best outdoor paints contain some quantity of lead pigment to improve weathering. The major conclusion reached in the study by the paint industry (2) can be summed up by saying that any concentration of hydrogen sulfide present in the atmosphere will produce darkening of paint containing lead pigments in time if the paint surface is actually wet with water. The researchers found, however, that blackening is considerably delayed if the lead content of the paint is low and if the paint film remains glossy and unweathered.

Solutions to some of the problems of air pollution facing the industry are not easily forthcoming. Research on projects at universities and at individual mills is slowly producing results. The objectives of the two university projects previously mentioned were originally aimed at immediate investigation of control activities through a multiple approach. It was soon found, however, that one of the first needs was adequate and accurate sampling methods and the original objectives thus had to be postponed while sampling was investigated. Work on the two projects has been reported previously in the technical bulletins of the National Council for Stream Improvement (3). Research activities in the individual mills have been more directly aimed at control. Unfortunately, many of these developments never appear in the literature.

## CONTROL OF PARTICULATES

Many activities of the industry which result in a lessening of air pollution potential, fortunately result also in economic recovery of raw materials or product. In fact, the units most responsible for reducing particulate air pollution from sulfate pulping were originally installed and later improved to reclaim valuable saltcake. For some time, practically all sulfate mills have been designed with cyclones and high-efficiency electrostatic precipitators or Venturi scrubbers on the recovery furnace. Twenty years ago, the process required an average of about 300 pounds of make-up saltcake per ton of pulp. Today many mills operate on 80 pounds or less. At a mill producing 500 tons of pulp a day, this represents not only a savings of the cost of some 55 tons of saltcake daily, but this amount is no longer spread around in the environment. For many years, other important savings have been realized by appropriate scrubbers on lime kilns, by condensing digester relief and blow gases from which turpentine and other compounds can be reclaimed, and by converting from disc-type evaporators to multiple-effect units. Discharges to the environment also have been reduced by improved combustion practices in power boilers utilizing waste wood residues and in recovery furnaces.

More recently the industry, stimulated by an increase in air pollution legislation and encouraged by improved sampling techniques, has

developed new ways of reducing air-borne emissions to an even lower level. Some of the procedures are not yet in widespread use, but have been quite successful in plants where they are practiced. At present, three general approaches are being used for reducing odors and reducing fall-out from recovery furnace particulates. To improve saltcake recovery, secondary scrubbers have been installed in some instances following primary collection devices such as electrostatic precipitators. In general, it is not the purpose of these secondary scrubbers to collect particles too small to be collected by the primary devices, but rather to reduce losses caused by carry-over. An added dividend is obtained since these scrubbers also collect some gaseous material and thus reduce the amount of make-up sulfur required. The secondary scrubbers may take any of several forms although most of them are commercially available devices. Venturi scrubbers as well as spray-type washers are popular (4). Although the Venturi unit is most effective in some respects, the pressure loss through the device may be as high as 25 inches of water. Loss in the spray-type scrubber, on the other hand, may be only 0.5 to 6 inches of water. Water, weak black liquor, or both are used as scrubbing liquid. Generally, the scrubbing solution is recirculated to a fixed salt content. Normal loads to the supplemental scrubbing devices are said to be 0.05 to 0.15 grains per cubic foot. This compares with 3 to 5 grains per cubic foot as the load on the primary collectors. Since the secondary units are not intended for high dust loading, they will clog readily if the primary device stops functioning. The soda ash in the effluent is probably recovered as sodium carbonate because of the carbon dioxide content of the flue gases. In order to function properly and eliminate environmental problems rather than merely transfer their location, it is essential that some effective type of mist eliminator be installed on the effluent line before discharge. A number of commercial devices are available, but frequently a tall stack will serve as a mist eliminator. In mills where secondary scrubbers are installed, they reportedly are performing with satisfaction.

Mist losses from dissolving tanks have been a source of local annoyance in pulp mills. The most recent attempts to control such emissions have made use of mesh demisters. The mesh fibers are usually of stainless steel or plastic and frequently are backwashed with water. At one installation (5), it is reported that 99 percent of all droplets over 5$\mu$ diameter are recovered.

## ODOR REDUCTION

One recent approach to odor control is collection and oxidation of blow gases and digester relief gases. The most satisfactory way of collection appears to be removal of the condensable fractions followed by storage in a floating-cover or diaphragm-type gas holder. The gas holder floats on the line to take care of surges that occur during a blow. Oxidation of the collected gases has been accomplished by burning and by mixing with bleach plant effluent. Several mills have installed equipment intended to oxidize the sulfur compounds by burning. Pure digester relief and blow gases are reportedly nearly free of oxygen. According to De Haas and Hansen (5) the gases should not contain more than 5 percent oxygen, or a mixture of gas and air should contain no more than 0.5 per-

cent total organic compounds. All organic sulfides are reported to be destroyed at 1200°F. The flame propagation rate in mixtures of these gases is less than 90 feet per second. In one early installation of this type, an Anthony furnace was used as the combustion unit and was operated at 1400°F. This furnace was fueled with turpentine, fuel oil, or gas. The non-condensable fraction was stored in a gas holder and metered into the furnace. Operating difficulties, as well as potential fuel savings, prompted a change about 2 years ago. The gases are now burned in the lime kiln. Coleman (7) reports that the gas now flows through a rock scrubber to remove turpentine mist, through a flame arrester, a flow controller, and another flame arrester before being diluted in the primary air-duct to the kiln. This arrangement is shown in Figure 2. The noncondensables require dilution with 19 or more volumes of air so the flow controller is set to provide a fixed rate. Both the primary air fan and the induced draft

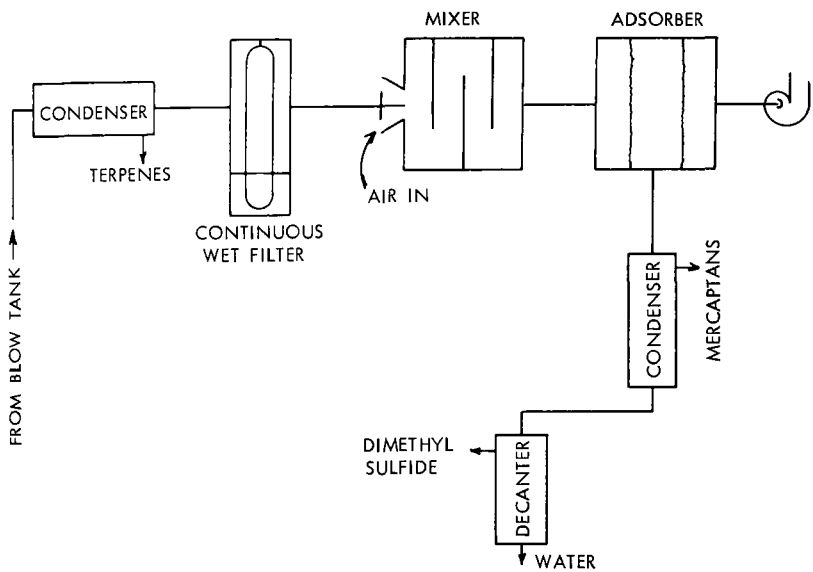


Figure 2.

fan on the kiln are electrically interlocked with the flow controller to shut off the gas if either fan stops. Rupture plates have been placed along the gas lines in several locations. Noncondensable digester relief and blow gases are readily oxidized with bleach plant effluent. For the usual concentration of chlorine in this waste, about four volumes of effluent are required to each volume of gas. The simplest method of contact is to introduce the gas flow into the dropleg of the bleaching unit. Combustion of these gases has the advantage of possible recovery of heat and sulfur. It has the disadvantage, however, of requiring elaborate precautions to prevent explosion. When the gases are oxidized with bleach plant effluent, neither heat nor sulfur can be recovered.

Another recent approach to assist in odor reduction has been undertaken in a number of mills in the northwest where black liquor oxida-

tion units are installed. In theory, oxidizing the sulfur compounds in the liquor before evaporating and burning will prevent the formation of many of the odorous compounds which are otherwise released. Actually, black liquor oxidation is effective only on the release of odorous gases from vacuum and direct-contact evaporators. Some improvement may be noted in the recovery furnace where combustion may result in less hydrogen sulfide production. It is reported that in some types of furnaces, oxidized black liquor burns better than unoxidized. Black liquor oxidation also has no appreciable effect on digester relief and blowgases. Collins (8) reports that a high degree of black liquor oxidation results in a reduction of sulfur losses from evaporators of more than 90 percent. Sulfur losses according to various investigators, may average from 1 to 15 pounds per ton of pulp where black liquor oxidation is not practiced. Wright et al (9) pointed out, however, that black liquor oxidation is no cure-all for odors since odor control must be judged on an all or nothing basis. The public generally is concerned more with the presence or absence of odors than their intensity.

Black liquor oxidation units take three general forms: packed towers, thin-film oxidizers, and porous-plate aerators. These various types of units have the advantages and disadvantages well-known to chemical engineers. Air is used as the source of oxygen and except in those cases where pine is pulped, no excessive foam is produced. As you progress eastward across the country, more and more severe foam problems are found until they reach their peak in the pine pulped in the southeast. Because of the advantages of black liquor oxidation, a special study is underway at the regional laboratory of the National Council for Stream Improvement in Baton Rouge. This study is aimed specifically at the application of black liquor oxidation to southern pulping conditions. The thin-film unit developed by the British Columbia Research Council reportedly has been successfully applied to southern operation. The use of tonnage oxygen has been reported by several investigators (10,11), but under the conditions of the studies pure oxygen was not found to be suitable. The Air Pollution Research Laboratory at the University of Florida is undertaking a study of black liqour oxidation using tonnage oxygen which appears feasible. In addition to no foam formation, potential heat recovery is promising. Several mills on the west coast which utilize packed towers for black liquor oxidation have attempted the destruction of odorous gases from the digester and blow tanks in the oxidizing unit (12). DeHaas (6) reports that while nearly all of the hydrogen sulfide was destroyed, about 45 percent of the mercaptans and 90 percent of the dimethyl sulfide passed through unchanged.

## OTHER CONTROLS

The recent literature contains a proposal for treating blow and relief gases to recover salable chemicals (13). It is not known whether the complete process is in full-scale use in any mill in this country. Schneider proposed the condensation of the condensable fractions of the gases to recover terpenes. A wet filter would remove any fibers present in the offgas following which outside air would be mixed with the stream to cool it to about 100°F. Activated carbon is suggested as an adsorption medium from which mercaptans and sulfides could be recovered. It is proposed that the adsorbers be regenerated and stripped by steam with the steam condensed

to remove water and dimethyl sulfide. Any mercaptan and sulfides in the water may be decanted and fractionated. The gaseous mercaptan which would pass through the condenser would be contaminated with dimethyl sulfide, but could be liquified and fractionated. A scheme for accomplishing this proposal is seen in Figure 3. The author reports that at present prices, the cost of the proposed installation would be low enough to recover the capital investment in two years. The value of recovering sulfide alone for a 300-ton-per-day plant would amount to tens of thousands of dollars each year.

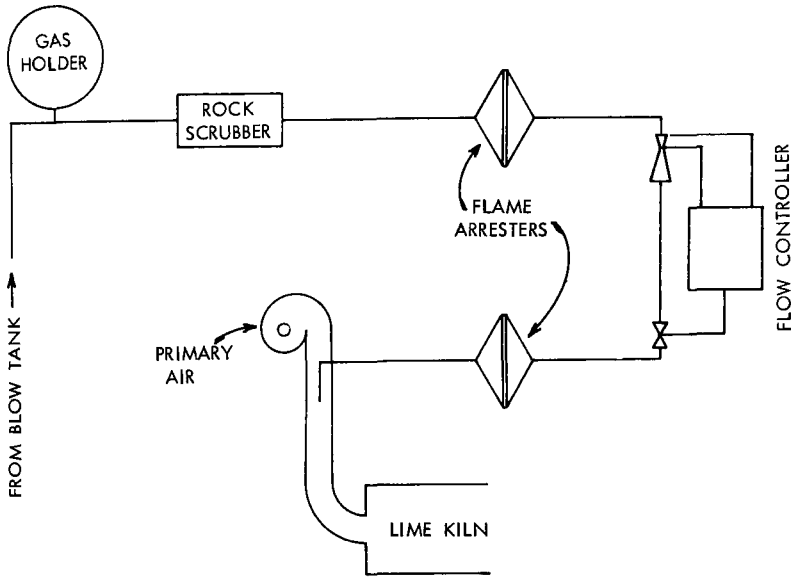


Figure 3.

Several practices to remove odors have been in vogue abroad for a number of years but have not yet found favor in this country. Many of them have been investigated here but they have not yet been put into practice. For example, Collins (8) reports that oxidation of black liquor by the addition of peroxides and other chemical oxidizers was studied but was found to be impractical economically. Reduction of odorous compounds in the gas stream has been attempted by using chlorine dioxide, chlorine, ozone, catalyst, and adsorption of wood chips. Work was recently completed at the University of Florida on catalytic oxidation of some of the organic sulfur compounds found in pulping operations. With further investigation, the results of this basic research may soon be applied to plant operation.

In most sulfate mills, improved design and improved operation of the recovery furnace can pay large dividends. The recovery furnace is intended to serve as a reclaiming unit for cooking chemicals in a reducing zone near the bottom and a heat-recovery unit in a secondary combustion zone near the top. Adequate secondary air and sufficiently high temperatures can result in greater heat recovery by oxidizing the hydrogen sulfide to sulfur dioxide. The sulfur dioxide can then be absorbed from the gas stream in a wet scrubber and the sulfur losses reduced still further.

This paper has been able to cover only briefly, some of the steps being taken to control air pollution from alkaline pulping operations. Further research into many of the problems of air pollution which potentially face the pulp industry is urgently needed. Some of the investigative work can best be undertaken at individual mills. Other problems should represent a group effort and be logically handled at existing projects established at universities and research institutes. This industry is developing sound approaches to the solution of its air polution problems. From my personal experience with air pollution control activities, control agencies look with considerably more favor on industries having a planned program of attack on their air pollution problems and a research program in existence before they encounter serious trouble.

## REFERENCES


1. Hendrickson, E. R., *TAPPI*, 43, 193A (March 1960).
2. Ward, G. B., Official Digest of the Federation of Paint and Varnish Production Clubs, 28, 1089 (1956).
3. Atmospheric Pollution Technical Bulletin Series, Nos. 1-14, National Council for Stream Improvement, Inc., New York.
4. First, M. W., H. E. Friedrich, and R. P. Warren, *TAPPI*, 43, 182A (June 1960).
5. Bernhardt, A. A., and J. S. Buchanan, *TAPPI* 43, 191A (June 1960).
6. DeHaas, G. G., and G. A. Hansen, *TAPPI*, 38, 732 (1955).
7. Coleman, A. A., *TAPPI*, 41, 166A (October 1958).
8. Collins, T. T., *Paper Trade J.* 130, 37 (January 19, 1950).
9. Wright, R. H., M. A. Schoening, and L. W. Shemilt, *TAPPI*, 36, 180, (1953).
10. Fones, R. E., and J. E. Sapp, *TAPPI*, 43, 369 (1960).
11. Murray, F. E. Project Report 59-36, British Columbia Research Council, Vancouver (June 9, 1959).
12. Bialkowsky, H. W., and G. G. DeHaas, *Paper Mill News*, 74, 14 (September 1, 1951).
13. Schneider, F., *TAPPI*, 41, 70A, (January 1958).

# IS IT POSSIBLE TO BUILD AND OPERATE A COMPLETELY ODORLESS KRAFT MILL?

R. H. Wright *

## PART 1.

A COMPLETELY odorless mill is 100 percent free from odor, not 99 percent or even 99.9 percent free, but 100 percent odorless. The answer to the question of whether this is a realizable objective is only partly a technical one. Technically, the answer is that a completely odorless mill is possible if management is prepared to pay the price. **But the price is made up of three parts and all three parts must be paid in full.**

### THE ECONOMIC APPROACH TO BE FACED BY MANAGEMENT

The first part of the price consists of an **initial down payment** for odor control equipment, including enclosures and collecting ducts and decontaminating apparatus to treat **all** the effluents leaving the mill. Some of these, like the smoke stack, will be needed anyway, others will not

* Head, Division of Chemistry, B C Research Council

be normal adjuncts to mill operation, but will be especially designed for the purpose of containing an odor which has heretofore been allowed to escape uncontrolled.

After the down payment has been made there will be **instalment payments** which will go on as long as the mill continues to operate. The instalment payments are partly direct and partly indirect.

The **direct instalment payments** are the costs of maintaining **all** the odor control equipment at top efficiency. This does not present much difficulty in the cases where the equipment directly assists the process of making pulp: it is usually not very difficult to convince the operators of the importance of keeping a chemical and heat recovery system in first-class condition. It may be more difficult to ensure the same degree of maintenance on a duct and fan intended to collect a few cubic feet of foul gas from a tailings chest or foam breaker But if a completely odorless operation is to be achieved, **all** the odor control equipment must be kept at top efficiency. Several technically excellent odor control systems which have been built at one time or another have failed primarily for this reason. It is therefore most important that the odor control measures shall interfere as little as possible with normal mill operation, and that they shall give a minimum of trouble and require a minimum of maintenance. Unless this requirement is met they are not likely to be adequately served and maintained by the operators whose primary responsibility is, after all, production. Odor control equipment **must** be acceptable to and accepted by the operators, and must be designed accordingly.

Even more important than the direct instalment payments are the **indirect instalment charges.** These arise whenever it is necessary to limit production to prevent odor emission.

## DESIGNED CAPACITY AND ODOR-FREE OPERATION

For example a mill designed to produce 300 tons of pulp daily could probably turn out 425 tons if everything were run at maximum overload, but the operation might cease to be odorless at anything over 350 tons. Under these conditions, odor-free operation would require that the mill never be operated at more than 50 tons per day above its designed capacity. This is a very real situation inasmuch as the most common limiting factor in output is the amount of overload that can be heaped on the recovery furnace, and when overdriven the furnace may generate unmanageable amounts of odor. The difference in output between the odor-free level and the absolute maximum level at which the plant can be driven is difficult to estimate in advance, but it is probably the largest charge against the odor control system. Indirect payments must also be made whenever it is necessary to shut down the whole mill on account of some possibly quite minor breakdown in the odor control equipment (in an extreme case, perhaps, nothing more than a broken window).

Breakdowns in odor-controlling apparatus can be minimized (though not wholly eliminated) by good design and in some cases duplication of equipment, and it may be possible to over-design the odor control facilities to a point where the limiting factor may be somewhere else, but **the fact that the odor control programme can impose an indirect cost by limiting**

**production must be squarely faced and accepted at every level of the organization.**

If this is accepted, then an odorless mill can be realized.

If this is not accepted, then there is little point in making detailed estimates of the initial down payment and direct instalment payments on a "completely odorless mill" because the mill will not be completely odorless.

A preliminary consideration of the technical problems suggests that the direct costs of a complete odor control system would not be excessive nor would they all be pure outgo. The release of dusts and odors represents a loss of material whose recovery (possibly with the simultaneous recovery of heat) would constitute an operating economy. Moreover, some of the odor control measures may be directly beneficial to the process, as for example, when black liquor oxidation gives smoother evaporator operation, less corrosion, and reduced carry-over of chemicals into the hot condensate which can then be used on the brown stock washers with the production of cleaner pulp.

# PART 2.

# THE TECHNICAL ASPECTS OF A COMPLETELY ODORLESS KRAFT MILL

THE UNPLEASANT, cabbage-like odor, which is characteristic of the kraft process and is commonly called **the "kraft odor," is due mainly to a group of organic sulphur compounds of which the most important are methyl mercaptan and its oxidation products, dimethyl disulfide and dimethyl sulfide.** These and possibly other malodorous substances are formed in the digester by chemical reactions between the cooking chemicals, especially sodium sulfide, and certain constituents of the wood. **They are, therefore, inseparable from the kraft process and its odor-free operation will depend on methods for retaining them in the system or converting them to innocuous substances before allowing them to escape.**

Certain parts of the process may also give rise to an emission of dust and it is generally desirable that this form of air pollution be minimized if possible by the same equipment as that used to contain the odors.

## KRAFT OPERATING SEQUENCE

Figure 1 shows the usual sequence of operations in producing kraft pulp. Wood chips are cooked at about 175°C with a solution containing sodium sulfide and sodium hydroxide. When cooking is complete the digesters are blown into a blow tank and the steam which flashes off may be passed into some form of heat recovery system. The pulp is then separated from knots and incompletely-cooked chips and washed more or less free

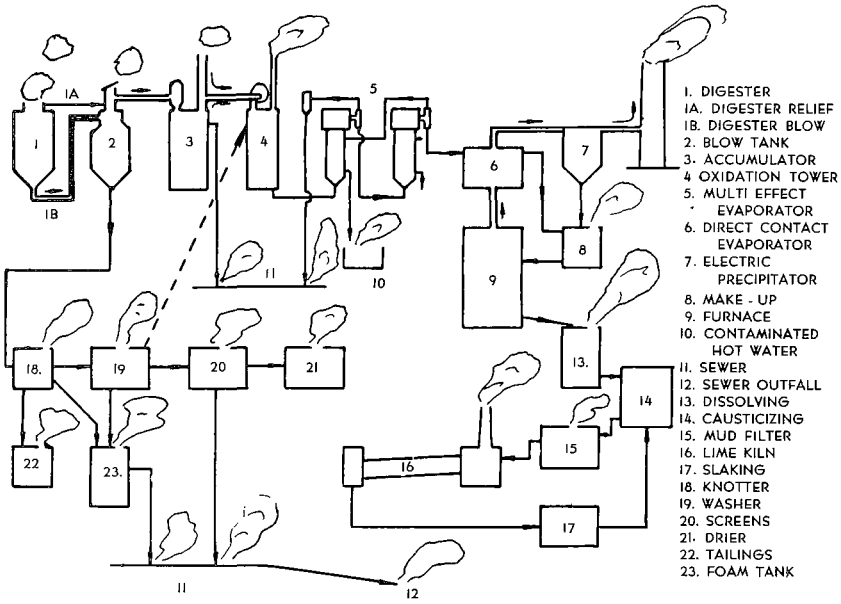


Figure 1. Odor release in the kraft process.

from the spent cooking liquor, or "black liquor," and the latter is then concentrated by evaporation first in the multiple-effect evaporator and then in a direct contact evaporator using hot flue gas from the recovery furnace. The concentrated black liquor is burned in the recovery furnace, after adding the necessary make-up chemicals. In the furnace carbonaceous matter is burned, sodium hydroxide is converted to sodium carbonate, and sulphur compounds are converted as far as possible into sodium sulfide. The molten "smelt" from the furnace consists mainly of sodium carbonate and sodium sulfide and is dissolved in water to give "green liquor" which is then recausticized with a solution of slaked lime to give white liquor, which is then sent back into the digester. The calcium carbonate that is formed in the recausticizing may be collected on a filter and reburned to calcium oxide which is then slaked and used to recausticize a further lot of green liquor. The furnace gas, besides containing the usual products of combustion, also carries a substantial load of particulate matter, mainly sodium sulfate and sodium carbonate which is usually collected by an electrostatic precipitator and returned to the system.

Thus, two types of air pollution may result from this sequence of operations: pollution by solid particles and pollution by objectionable odor.

## DUST EMISSION

The following is a fairly representative analysis of the particulate matter entrained in the flue gas:

| | |
|---|---|
| NaCl | 17.6% |
| $Na_2CO_3$ | 36.4 |
| $Na_2SO_4$ | 33.6 |
| $Na_2SO_3$ | 4.4 |
| NaOH | 2.0 |
| $Na_2S$ | 0.7 |
| Carbon + undetermined | 5.3 |

The sodium chloride in this sample was derived from the pulping of logs, which had been floated in salt water, and it would be practically absent in an inland mill. The rest of the components, with the exception of sodium sulfate, tend to be markedly caustic and can damage or kill vegetation and mar the paint on automobiles for distances of from 1 to 2 miles downwind from the mill. The control of this type of pollution is therefore important, when a pulp mill is located near a built-up area or a farming region.

In addition to the fall-out of dust from the main stack, there may be additional fall-out of particulate matter from two other sources. If the lime kiln which produces quick-lime for the recausticizing process is operating wholly or in part on the precipitated calcium carbonate filter cake, there will generally be some entrainment of lime dust contaminated with a small proportion of sodium salts unless the lime kiln stack is provided with an efficient scrubber, in which case the dust load is usually negligible.

The other source of dust is the dissolving tank. In many mills the red-hot smelt from the recovery furnace is allowed to flow in a relatively massive stream into the dissolving tank. This usually results in very noisy operation with a copious liberation of steam and occasional explosions in the dissolving tank, but there is usually very little loss of chemicals. In recent years it has become a common practice to disintegrate the stream of molten material with a high pressure steam jet so as to eliminate both the noise and the danger of explosions in the dissolving tank. However, the use of steam jets may increase the loss of chemicals by atomization and entrainment in the steam leaving the dissolving tank.

## ODOR RELEASE

In Figure 1 the places where odors may be released are shown by clouds of vapor. Not all these odor emissions are equally important, however, some being much larger or more concentrated than others. Yet if a substantially odor-free process is to be secured, all must be brought under control. The places where the largest amounts of odor are released and therefore those which have received the most attention up till now are the following:

**Digester Gases**—The gases given off when the digesters are relieved and blown contain particularly high concentrations of mercaptans along with steam and possibly other substances such as methanol. (This last may have been the substance responsible for occasional reports of eye damage following exposure to heavy concentrations of digester gas. It is an unusual hazard inasmuch as most mills today possess blow heat recovery systems which condense the greater part of the steam in the digester gas and with it the very soluble methanol.) It is a fairly common practice to discharge all these gases into the blow tank from which they pass into the heat recovery system. There they distribute themselves between the vapor phase and the contaminated hot water in the accumulator tank. The uncon-

densed part constitutes a very serious source of odor because the volume is substantial and the concentration of malodorous material is very high indeed. The contaminated water usually finds its way eventually to the sewer where its ill-smelling constituents may be released at a greater or lesser rate depending upon the temperature, the amount of exposure to the atmosphere, and the degree of dilution with other liquid effluents.

**The Evaporator Gases**—The weak black liquor containing about 15 percent solids, after separation from the pulp, is normally evaporated to about 50 percent solids in a multiple-effect evaporator. In this process there may be a substantial production of foul gases which commonly include substantial amounts of hydrogen sulfide. These gases are carried out of the evaporator in the barometric leg of the jet condenser. The black liquor leaving the multiple-effect evaporator is usually further evaporated to about 65 percent solids in some form of direct contact evaporator where it is exposed to hot flue gas from the recovery furnace. The amount of odor picked up by the furnace gases may be quite small, or it may be very great, depending upon the way the equipment is operated. **If the viscous film of strong liquor builds up a cake which is subject to destructive distillation, then a large quantity of foul gas may be generated and carried into the atmosphere with the flue gas.**

**The Furnace Gases**—The operation of the recovery furnace may be a critical factor in the odor producing process. The primary function of the recovery furnace is to generate heat by oxidizing the carbonaceous material in the strong black liquor, and to regenerate the cooking chemicals by reducing sulphur compounds to sodium sulfide which is a principal constituent of the smelt. The problem of reducing one constituent of the black liquor while oxidizing another is solved in part by correct design of the furnace and in part by correct control of the combustion conditions, and in particular the primary and secondary air supply. Inasmuch as the main purpose of the furnace is to generate heat and chemicals, there may be circumstances when, for example, the demand for steam may require that the furnace be operated in such a way that it generates substantial quantities of foul-smelling substances (mainly partial oxidation products of methyl mercaptan), usually because there is insufficient secondary air or because the furnace is forced beyond its proper capacity. Generally speaking, the furnace plus the direct contact evaporator constitute a significant source of odor comparable in importance to the digester gases.

**Miscellaneous Gases**—In addition to the foregoing, Figure 1 shows a number of other points of odor emission, which individually may be relatively unimportant, but which in the aggregrate are sufficient to produce a significant odor problem over distances of a mile or two even though the major sources may be completely controlled.

For example Figure 1 shows an intermittent odor release from the top of the digester itself when it is opened to admit a fresh charge of chips, and occasional puffs of odor from the blow tank and accumulator vents. The blow tank is not usually designed as a pressure vessel, and is therefore fitted with pop valves, which allow steam to escape if for any reason the condenser on the heat recovery apparatus fails or is slow to start up. The prevention of this kind of emission is mainly an operating problem, but a comprehensive odor control system would make provision for some additional condensing measures to take care of abnormal operating conditions. In the same way there is normally no emission of vapor from the

accumulator tank vent when connected to the oxidation system in the way shown in Figure 1, but if the heat recovery system fails for any reason to condense the greater part of the steam when a digester is blown, then the volume may be greater than the oxidation tower can handle and the excess will escape via the vent pipe. Under these conditions large quantities of malodorous material may be released from both the accumulator vent and the oxidation tower exhaust. This again is an abnormal but by no means an unknown event and a complete odor control system would include additional condensing capacity on the lower end of the accumulator vent.

Again, when the mixture of pulp and black liquor from the digester is separated on the brown stock washer the hot mixture releases substantial quantities of water vapor and malodorous material which are commonly collected in a hood and discharged to the atmosphere. The concentration of mercaptan is normally quite small but the total volume of exhausting air is so large that the aggregate amount of odor is quite significant from this source. In general there will be some odor release wherever black liquor of incompletely washed pulp is exposed to the atmosphere.

## MEASURES FOR THE CONTROL OF DUST EMISSION

The dust content of the furnace gas is fairly large, in the order of about 100 pounds per ton of pulp produced, and it is normally made up of very minute particles less than a micron in diameter. The installation of an electrostatic precipitator serves to retain 85 to 97 percent of this material, but the operation is not 100 percent and the balance escapes to the atmosphere. During its passage through the precipitator, however, the dust is largely flocculated so that the solid material which escapes from the stack consists partly of fluffy aggregates up to a millimeter in diameter which fall out within a mile or two of the mill and partly of fine particles which are comparable to those found in ordinary industrial smoke. **It is mainly the large aggregates which damage paint and vegetation.**

**To remove the dust which passes through the electrostatic precipitator, bag filters have been recommended. They are reported to provide an effective solution, though possibly a costly and troublesome one because of short bag life. An alternative, and on the face of it, an attractive solution, is the use of a system of scrubbers designed to recover both heat and chemicals from the furnace gases. Of these the two best known are the Inka System and more recently the Tomlinson-B-W System.** In the latter the electrostatic precipitator is eliminated completely and the furnace gases are passed through a system of deluge towers or more recently cyclonic scrubbers. These are arranged so that the hot gases are first brought in contact with black liquor from the multiple-effect evaporators whereby additional moisture is removed from the black liquor while the flue gases are cooled nearly to the dew point. Later, scrubbers take the flue gases through the dew point so as to recover the latent heat of the water vapor while at the same time scrubbing out a large proportion of the remaining solid material. The cooling and condensation of the moisture reduce the total volume of the gas to a point where a smaller and lower stack can be used to carry it off.

Earlier attempts to use processes of this sort were frustrated by the fact that the flue gases normally contained both sulphur dioxide and hydro-

gen sulfide, and this combination in conjunction with water makes an excessively corrosive mixture. Hence it was necessary to make sure that the electrostatic precipitator and ancillary ducting were always maintained at a temperature above the dewpoint. The position was changed when it was shown that the process of black liquor oxidation (to be more fully discussed below) largely eliminates the hydrogen sulfide from the furnace gases and so overcomes the greater part of the corrosion problem. It also enables the sensible and latent heat of the stack to be recovered without excessive corrosion of the equipment.

The initial scrubbing of the flue gas with strong black liquor must be carefully controlled. The black liquor is strongly alkaline because of its sodium hydroxide and sodium sulfide content, and in contact with flue gas it absorbs carbon dioxide which neutralizes the alkali and displaces hydrogen sulfide from the sodium sulfide. The displacement of hydrogen sulfide can be prevented by the black liquor oxidation process already mentioned, but the carbonation of the alkali, if allowed to go too far, may lower the pH to a point where the organic material (present as sodium salts of lignin fragments) is precipitated with the formation of a solid cake in the scrubber.

The power required to operate this system is substantially greater than that required to operate a disc evaporator and electrostatic precipitator but it is claimed that the improved heat and chemical recovery justify the cost and the process can be operated with little difficulty and with a major reduction in air pollution by both particulate matter and odors.

At the present time there do not appear to be any standard or ready-made solutions to the problem of solid material from the dissolving tank though technically the matter is not difficult. The lime kiln dust is usually well taken care of by a scrubber of standard design which is normally integral with the burning equipment.

## MEASURES FOR THE CONTROL OF ODORS

The emission of odors from the recovery plant is claimed to be substantially controlled by the Tomlinson-B-W System already described. Short of this a substantial degree of reduction may be effected in plants equipped with the more conventional electrostatic precipitators by the process of black liquor oxidation. In this process, the weak black liquor after separation from the pulp and before entering the multiple-effect evaporator is exposed to an oxidizing gas, usually air, in such a way that the sodium sulfide in the liquor is destroyed by conversion to other compounds of sodium and sulphur. (The precise chemical details of what happens have not been fully worked out. It is generally agreed that the sodium sulfide and mercaptan content is reduced by oxidation, but whether the main product is sodium sulfite or sodium thio-sulfate, or some other compound is not yet known.) **Experience in a number of mills in various parts of the world has shown that when black liquor is properly oxidized the release of odors in the multiple-effect evaporator and furnace is very greatly curtailed.**

Several kinds of black liquor oxidizing apparatus have been reported. Generally speaking, they fall into two types: those which secure contact between air and liquor by intentionally making foam (and then breaking it),

and those which avoid foam production as far as possible. In view of the powerful froth-forming characteristics of black liquor from resinous types of wood, the non-foaming oxidation processes (if they can be made to work) have much to recommend them on the score of simplicity and freedom from operating troubles. Generally they consist of a tower of some sort containing a refractory packing over which the liquor trickles in good contact with air which is passed through the tower.

**If the air is passed countercurrent to the black liquor, it tends to strip malodorous material and carry it out into the atmosphere. If, however, the air and black liquor flow concurrently, any foul smelling substances which may escape from the fresh black liquor that enters the tower are reabsorbed by the oxidized liquor farther down.** This principle can also be used to absorb the non-condensable digester gases, which otherwise would continue to be formed and escape during the relieving and blowing operations. If the oxidation equipment is built close to the equipment that is used to condense the steam and vapors from the digesters, a very simple arrangement serves to ensure that any uncondensed gases are mixed with air and drawn into the towers where their foul smelling components are absorbed and oxidized in the black liquor. This procedure was developed and patented by the British Columbia Research Council.

A typical installation embodying the process is shown in Figure 2. Steam and vapors from the blow tank (A) pass via the duct (B) to the direct contact condenser (C) and into the hot water accumulator tank (D). The noncondensable (and very malodorous) gases would normally escape to the atmosphere via the stack (E) but are, instead, drawn through the duct (F) into the oxidation towers (G) by fans mounted on top of the towers. The additional air required for the oxidation is drawn downward through the stack (E). The success of this process depends on the fact that black

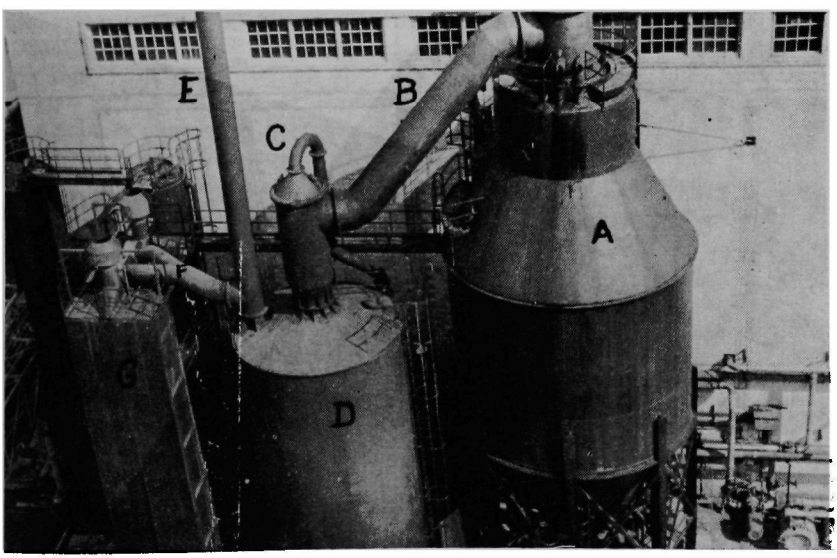


Figure 2. Showing the blow tank (a), the accumulator tank (d), and the oxidation tower (g).

liquor contains substances which strongly catalyze the oxidation of mercaptan and that the tower design permits a very high ratio of air to black liquor to be passed through the towers. In this way the peak emissions of digester gas which occur when digesters are blown can be taken into the towers without impairing their oxidizing capacity. This makes it unnecessary to provide storage in vapor spheres or otherwise of the extremely foul and, on occasion, explosive digester gases. They are handled automatically as they come.

It has sometimes been suggested that sulphur compounds which have been absorbed and oxidized in this way would later be stripped out again in the recovery plant, and especially in the direct contact evaporator. Experience with several installations now in operation has not borne out this prediction.

The measures thus far described, namely, black liquor oxidation (with absorption of digester gases) plus scrubbing and condensation of stack gases, are capable of bringing about a very great diminution of the amount of malodorous and particulate material released into the atmosphere. In order to understand what effect these measures will have on the mill odor it is necessary to understand certain characteristics of the sense of smell and of the way gases are diffused through the atmosphere.

Figure 3 shows the relation between the concentration of ethyl mercaptan and the "strength" of the odor expressed on a zero to five scale estimated subjectively by each of a number of observers whose separate assessments were averaged and plotted as points on the graph. It is evident that the strength of intensity of the odor sensation, insofar as it can be given a numerical rating, is proportional to the logarithm of the concentration of odorous material. This means that, for example, a 90 percent reduction of malodorous material at any point, i.e. a reduction by a factor of 10, may make a scarcely perceptible reduction in the strength of the odor and a 99 percent reduction in concentration would be required to reduce the odor from, for example, "faint" (strength 2) to "very faint" (strength 1). At first sight this would seem to preclude the possibility of really eliminating the odor, but the situation is redeemed by the fact that as soon as the odor is released it begins to mix with air until it becomes diluted to a concentration that is below the threshold of perception. Hence if the quantity of malodorous material that is released at the source can be reduced by, say, 90 percent, the quantity of air required to dilute it will also be reduced by 90 percent, which in practice means a reduction in the radius over which the smell will be noticed.

The dilution of gases released into the atmosphere has been analyzed mathematically by Sutton, who has taken into account such factors as wind strength, atmospheric turbulence, height and strength of the point of emission, and other relevant factors. His formulae have been tested experimentally in connection with the travel of war gas clouds and chimney stack plumes and have been shown to afford a reasonably accurate account of what actually happens over short distances. For greater distance the postulates tend to become artificial: for example it may be calculated that for a source of given strength the odor would be perceptible at distances in the order of 50 miles with a wind of 2 miles per hour velocity. But this would imply that the wind blew in a constant direction and with a constant velocity for 25 hours, which is somewhat unlikely, at least in the temperate zone. However, taking Sutton's formulae at their face value, the downwind

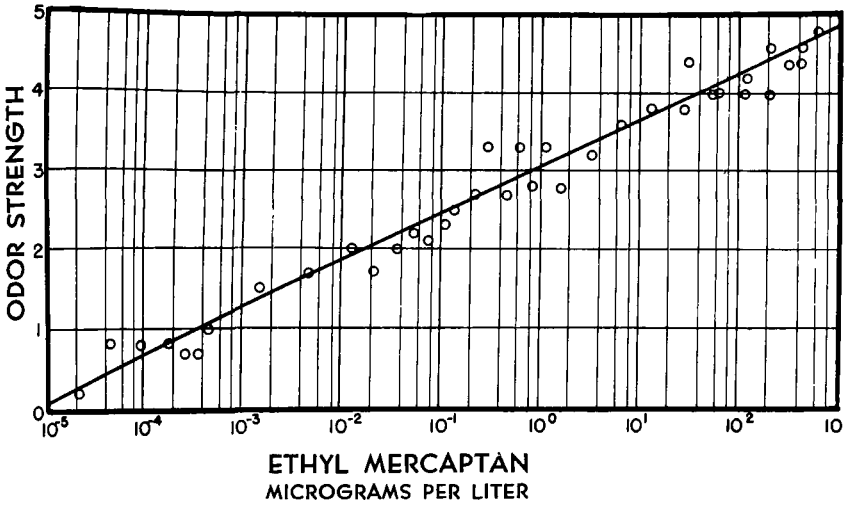


Figure 3.

travel of odor from a source releasing five grams of odorous material per second has been calculated for average conditions, over level ground covered with short grass, and for a wind velocity of five miles per hour. Figure 4 shows three curves, one for a point source of the specified type at ground level and the other for point sources of equal strength at heights of 225 and 450 feet.

Even discounting any absolute numerical accuracy in these curves they nevertheless afford some interesting qualitative information.

Thus the downwind range of an odor from a source at ground level is relatively much less than that from an elevated source. This is because there is a high rate of shear in the wind near the ground which induces very rapid mixing. The effect of a tenfold reduction in the strength of the source, say from five grams per second to 0.5 grams per second, is to displace the horizontal axis (which represents the threshold of perception) upward as shown by the dotted line. This reduces the downwind travel by a factor of about 4. A further tenfold reduction in the strength of the source would completely eliminate the odor from the 450-foot stack, would almost eliminate it from the 225-foot stack except for a zone on the threshold of perceptibility two miles downwind, but from the source at ground level the odor would be appreciable for distances out to about half a mile from the source.

Thus it may be concluded that the effect of every reduction in the amount of odor released is to contract the area within which the odor will be perceived. When it is necessary to prevent odors very near the mill, excessively high stacks are not as necessary as stringent measures to prevent any odor from being released anywhere and especially to prevent it from being released near the ground.

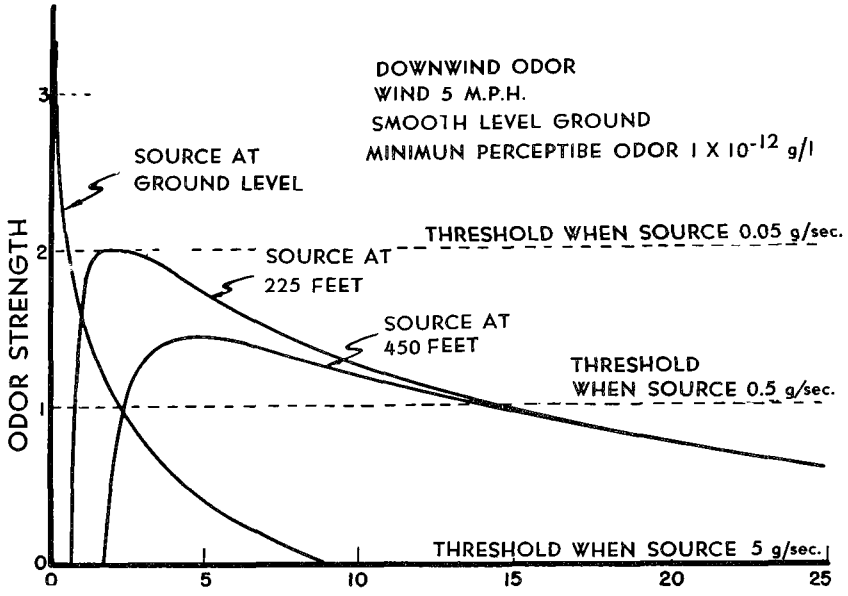


Figure 4.

**Figure 1 shows that there are a multiplicity of such odor release points. Many of them are quite minor and by themselves would probably be quite unimportant. Taken altogether however they account in the aggregate for a substantial part of the whole mill odor problem and must therefore be suitably cared for if completely odor-free operation is to be secured. The manner in which they can be cared for is not yet subject to a ready-made solution. The points of odor release are widely distributed through the plant so that some could be vented into a common duct and treated together, while others because of their location or nature might better be treated by themselves. The nature of the deodorizing treatment will not always be the same everywhere as some will be more suitable for some effluents than others, and the most practical treatment will have to be worked out for each odor source.**

The following are some of the possible procedures.

**Burning**—When malodorous sulphur compounds are completely burned the sulphur is converted to sulphur dioxide which has a relatively faint odor. A large volume, low intensity, and fairly constant stream of contaminated air can be passed into the recovery furnace, but only if it does not create an explosion hazard or otherwise interfere with the established pattern of furnace operation, and if the amount of ducting is not excessive. The use of small furnaces especially for odor destruction has been reported but they seem to involve considerable trouble and expense and should be used only as a last resort.

**Scrubbing**—Scrubbers can be set up to absorb and destroy malodorous materials by means of solutions of chlorine or hypochlorite. Such solutions may be available as spent liquors from the bleach plant, or they may be especially prepared using chlorine purchased for the purpose. If the volume of gas to be treated is small the scrubbers will be small and inexpensive. It may also be possible to operate existing scrubbers partly or wholly on spent bleach or other oxidizing solutions. For example, if a Peabody scrubber is used in the final stage of stack gas treatment, it may be operated partly or wholly on an oxidizing solution.

**Destruction in the Gas Phase**—Large volume, low intensity sources may be deodorized by adding small amounts of ozone, or possibly gaseous chlorine or by the action of deodorizing lamps.

It is probable that many and perhaps all of these measures would have to be invoked in one place or another before the release of odors and particulate air contaminants could be brought down to an acceptable level. What is not known at present is the volume of contaminated air to be expected from each of the residual release points, nor the precise chemical identity of the contaminants, nor their concentration. Further research and study are therefore necessary to secure the data on which specific recommendations for odor-free operation can be based.

## AN OUTLINE OF THE NEEDED RESEARCH

It is first of all necessary to make a detailed survey of several operating kraft mills so as to establish as exactly as possible the volumes of contaminated air which are released and where they are released and with what frequency, and what concentration of malodorous material they contain. The measurement of gas volumes is not usually a very difficult matter, as it normally reduces to a flow measurement. Around sewer gratings and similar low velocity emission points it may be necessary to build some sort of confining box, but the measurement of gas volume will not in general call for the development of any new technique. The measurement of the nature and concentration of the malodorous contaminant may present more difficulty. Chemical tests (usually colorimetric) have been devised for methyl mercaptan, and a few of the other substances, but the sensitivity of these tests falls far short of that of the nose. It is possible that the recently developed process of vapor phase chromatography may be applied to the problem so that the malodorous materials may be identified more precisely than ever before and also their quantities. The techniques necessary for this work are, however, not available ready-made at this time, and difficulty may be encountered as a result of the high content of moisture in many of the air streams to be analyzed. Some work on the method will therefore be necessary. An alternative method of analysis, which can be used if the vapor phase chromatographic method cannot be developed or is otherwise unsuitable, is a simple measurement of the total amount of sulphur in the gas stream. This is a relatively simple test requiring merely a filter to remove solid material, an oxidizing operation to convert the sulphur into sulphur dioxide, and an absorber of appropriate type. This has the virtue of simplicity and the defect of being non-specific and of lumping together substances with powerful and substances with quite weak odors.

Coupled with this identification and evaluation of the significant points of odor release, experiments to test the efficacy of various methods of odor destruction will have to be carried out. In a mill which already operates a bleach plant it would be a relatively simple matter to set up a small-scale scrubber fed with actual spent bleach liquor and use it to treat actual effluent air streams. By analysis of gases entering and leaving the scrubber the quantitative data needed for the design of full-scale deodorizing apparatus would be secured. In the same way, the usefulness of free chlorine or ozone in destroying residual traces of malodorous material in flue gas from the recovery plant or elsewhere could be established by actual trial using part of all of the gas issuing from the mill.

These methods of securing the required design data and of testing out the proposed odor absorption or destructive methods have obvious advantages over an exclusively laboratory study. It is hoped that such a comprehensive study can be undertaken in the near future.

# NEW WORK IN KRAFT MILL ODOR CONTROL

R. H. Wright *

The problem of kraft smells is as old as the kraft pulping process. The smells are mainly organic sulfur compounds, which are unavoidable by-products of the pulping reaction, and which are released in varying but substantial amounts at many widely separated parts of the process. For the benefit of those not familiar with the pulp industry, Figure 1 shows the bare outlines of the kraft process.

Wood and chemicals are put into the reaction vessel, or digester, D, where a reaction takes place which dissolves the noncellulosic part of the wood and leaves the cellulose fibers undissolved. From the digester, one obtains pulp, spent chemical solution (called weak black liquor), and smelly gases.

The weak black liquor is passed to a series of evaporators $E_1$ and $E_2$ where water is progressively removed to a point where the residue can be burned in a furnace F to generate steam and regenerate the cooking chemicals. The mill depicted in Figure 1 has no provision for odor control, so that there are substantial amounts of odor released from the digesters, the evaporators, and the chemical recovery furnace. Unless special precautions are taken, a mill making some hundreds of tons of pulp daily will easily release some hundreds of pounds of smelly material in the same time, and as the threshold of perceptibility is not far from 10 parts per billion, the smell can travel a long way before it is dissipated.

*British Columbia Research Council, Vancouver, Canada.

Presented at the 55th Annual Meeting of APCA, Sheraton-Chicago Hotel, May 20-24, 1962, Chicago, Illinois.

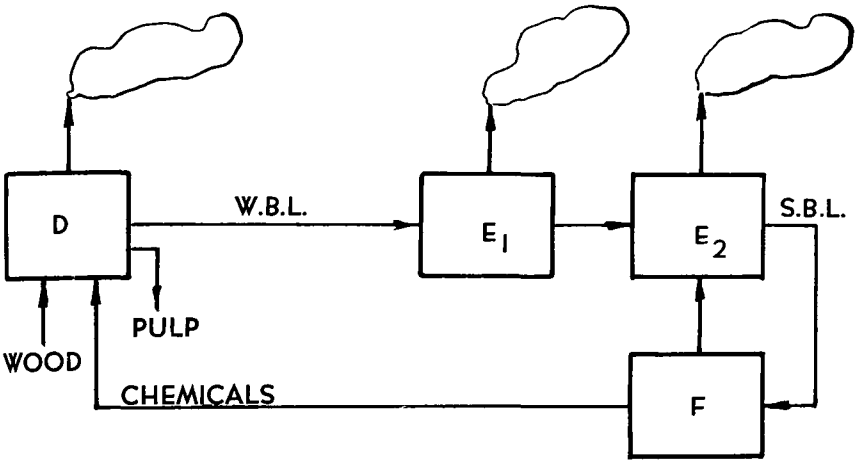


Figure 1.

Any odor control system must meet certain stringent but common-sense requirements, which are represented diagrammatically in Figure 2. First, the control system must be simple and it must not interfere with the basic process or operation of the mill. If it does, the operators—who are human—will not make the best use of it, and under those conditions even a technically sound system will soon become discredited.

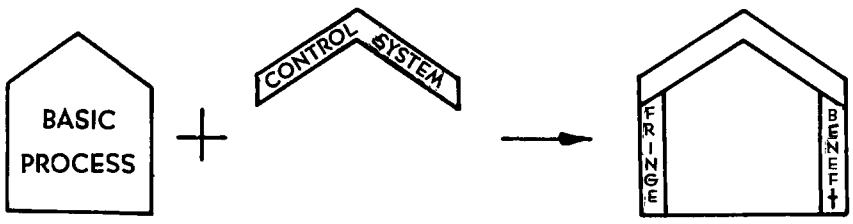


Figure 2.

As an example, there have been various attempts to collect the smelly gases by means of ducts and then burn them at some central place such as the recovery furnace. Apart from the cost and inconvenience of the ducts, the malodorous gases are often inflammable or explosive, and the ducts tend to ice up in cold weather. Understandably, few such systems have worked.

If the odor control system can contribute some additional fringe benefits, then it will be welcomed rather than tolerated, and the operators will be more inclined to maintain and even improve it.

The first substantial advance toward an acceptable system of smell control was made about 20 years ago as a result of studies by Bergstrom and Trobeck in Sweden and by G. H. Tomlinson in Canada. These led to the black liquor oxidation process. The weak black liquor from the digesters is an alkaline solution containing various organic and inorganic substances, including sodium sulfide and methyl mercaptan. If the hot liquor is brought in contact with air, the sodium sulfide is oxidized to sodium thiosulfate:

$$2Na_2S + H_2O + 2O_2 = Na_2S_2O_3 + 2NaOH$$

and the methyl mercaptan is oxidized to dimethyl disulfide:

$$\underset{\text{b.p. } 7.6\,^\circ C}{4CH_3SH} + O_2 = \underset{\text{b.p. } 117\,^\circ C}{2(CH_3)_2S_2} + 2H_2O$$

These reactions have several beneficial effects. The chemical destruction of the $Na_2S$ prevents $H_2S$ from being formed by hydrolysis in the evaporators, the extra NaOH generated by the reaction helps to maintain a high pH, and the methyl mercaptan is converted into the disulfide which is much less volatile and also less objectionable. All this helps to prevent sulfur being lost and makes for better chemical economy.

Figure 3 shows how black liquor oxidation affects the odor released from the mill. The oxidation tower, O.T., is situated so that the black liquor passes through it before going to the evaporator $E_1$.

The smell from the multiple-effect evaporator $E_1$ is eliminated or very greatly reduced, and, if the oxidation is sufficiently complete, there will be very little pick-up of odor in the direct contact evaporator $E_2$. Also, with properly designed apparatus it is possible to pass the smelly digester gases into the towers where they are largely absorbed and deodorized.

Thus, in a mill using black liquor oxidation, the most serious remaining sources of odor are, in order of decreasing importance, the recovery furnace, the direct contact evaporator, and the air exhausting from the oxidation towers. The problem of coping with these odors has been studied intensively in recent years and is the main theme of this paper.

## FURNACE ODORS

By itself, black liquor oxidation has no effect on the generation of odors in the furnace. The prime function of the furnace is to oxidize and burn away the organic matter in the black liquor and at the same time to chemically reduce the sulfur compounds to $Na_2S$. These seemingly incompatible functions are brought about by maintaining reducing conditions at the bottom of the furnace and, by introducing enough secondary air higher up to finish off the oxidation of the organic matter.

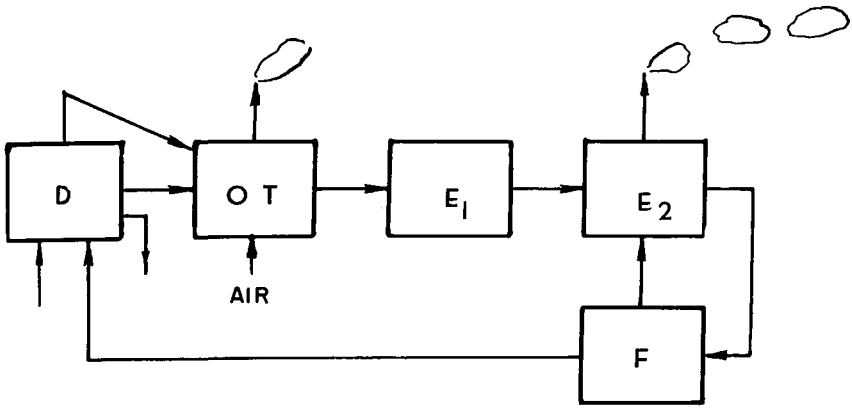


Figure 3.

With a properly designed and operated furnace these functions are fulfilled and the flue gas should contain no significant amounts of $H_2S$ or other reduced sulfur compounds. However, at high furnace loadings it is often necessary to reduce the supply of secondary air in order to prevent overheating of the furnace, and the immediate result of this is incomplete oxidation and the release of $H_2S$ and other malodors. Typical behaviour is shown in Figure 4, which also indicates that at the other extreme, when the furnace is underloaded, it runs cool and the liquor is destructively distilled without being fully burnt.

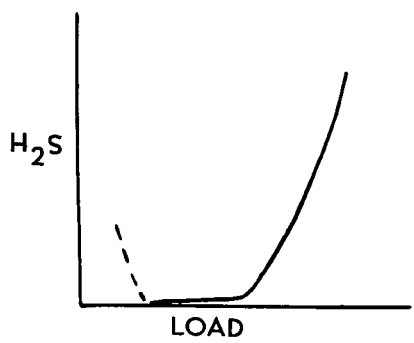


Figure 4.

Since the recovery furnace is the most expensive piece of equipment in a pulp mill, there are obvious incentives to load it as fully as possible.

Figures 5 and 6 show an experimental $H_2S$ meter which is now under development at the British Columbia Research Council for the purpose

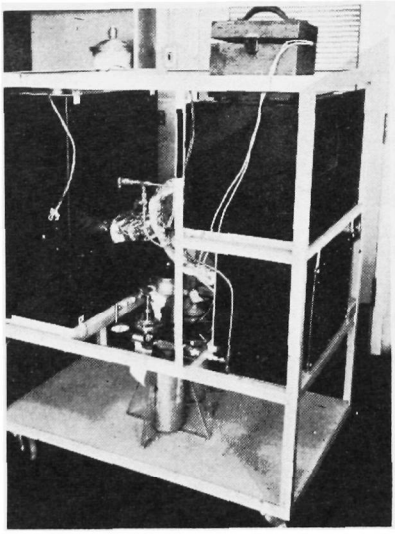

Figure 5. Flue gas analysis. $H_2S$ analysis unit.

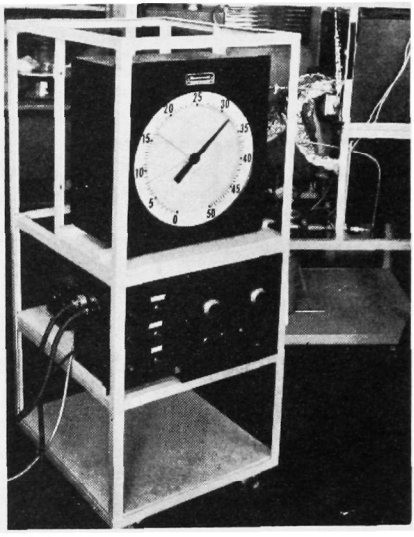

Figure 6. Flue gas analysis. $H_2S$ recorder unit.

of monitoring the flue gas so that maximum loading can be made consistent with minimum production of smell.

## THE DIRECT CONTACT EVAPORATOR

In principle, a sufficiently complete prior oxidation of the black liquor will prevent the furnace gases from picking up any malodors in the evaporator, apart from substances like dimethyl sulfide, which are not acidic and therefore not retained by the alkali. In practice, however, the direct contact evaporator does tend to contribute odors of which the most important is hydrogen sulfide. For one thing, if the black liquor oxidation is incomplete so as to leave a small residue of sodium sulfide in the weak liquor, this becomes magnified as a result of the evaporation of water and may amount to a significant quantity by the time the liquor reaches the recovery plant.

Again, if the oxidation of the weak liquor is done at too low a temperature, then instead of the sodium sulfide being oxidized to sodium thiosulfate, it is oxidized only as far as elemental sulfur, by the reaction,

$$2Na_2S + 2H_2O + O_2 = 4NaOH + 2S$$

When free sulfur is heated with alkali it is unstable with respect to sodium sulfide and may undergo an auto-oxidation of the type

$$6NaOH + 3S = 2Na_2S + Na_2SO_3 + 3H_2O$$

The regenerated sodium sulfide can then liberate $H_2S$ both by hydrolysis and by reaction with carbon dioxide in the flue gas.

Since it is not aways possible to maintain a sufficiently high temperature in the oxidation towers to prevent this, one may be forced to carry out the black liquor oxidation in two stages, using a partial oxidation of the weak liquor and finishing off the reaction after the liquor has been partially evaporated. This is likely to be complicated and inconvenient.

An alternative is to do away with the direct contact evaporator entirely and to make a corresponding increase in the capacity of the multiple-effect evaporators. This means an increase in complication, but can be made to yield some useful fringe benefits also, over and above the improved control of odors.

For example the direct contact evaporator involves only a single effect, and so requires about 1,000 Btu per lb of water evaporated. Mills using direct contact evaporators also use a substantial amount of steam to pre-heat the furnace air supply. If this steam is diverted to the extra multiple-effect evaporators, the flue gas can be used to heat the air. Thus the elimination of the direct contact evaporators can confer an over-all operating benefit in the form of heat economy, but at the cost of a substantial increase in complexity. The balance of advantage from this has to be worked out by each mill for itself.

## THE OXIDATION TOWER EXHAUST GAS

The reaction taking place in the oxidation tower effectively prevents the release of $H_2S$ in the discharge gases. Dimethyl sulfide $(CH_3)_2S$, is chemically neutral and has a boiling point of only 38°C so that it can be partially stripped from the liquor, and its smell is objectionable. Dimethyl disulfide, $(CH_3)_2S_2$, which is formed by the oxidation of methyl mercaptan has a boiling point of 117°C and is much less volatile than the monosulfide, but it, too, can be carried off to some extent by the exhaust gases, and is somewhat objectionable.

It is known in a general way that these substances can be destroyed by oxidation using solutions containing active chlorine, in forms which are often available as wastes from a pulp bleaching plant. However, only recently have the correct conditions for the effective utilization of these solutions been found.

It turns out that the oxidation proceeds at a sufficiently fast rate when the pH is low—in the range one to three—and is much slower at higher pH values of six to eight. However, at the low pH values there is a considerable liberation of chlorine gas from the solutions and this can mask the smell of the sulfur compounds. Many past attempts to deodorize these gases with bleach plant wastes or other chlorine solutions have turned out to be unsatisfactory because the reaction was judged to be complete when only chlorine could be smelled in the effluent gas. This was incorrect. The fact was that sulfur compounds were still present and their odors became noticeable at some distance down wind, when the chlorine was too dilute to mask their odor.

A two-stage process has now been developed for the absorption and oxidation of the malodorous substances in the oxidation tower exhaust gas,

using a gas-liquid reactor of conventional design. In the first stage the gases are exposed to chlorine solutions of low pH so as to absorb and oxidize the sulfur compounds to innocuous products by such reactions as

$$(CH_3)_2S + 2Cl_2 + 2H_2O = (CH_3)_2SO_2 + 4\ HCl$$

and

$$(CH_3)_2S_2 + 5Cl_2 + 6H_2O = 2CH_3SO_3H + 10\ HCl$$

The second stage of the scrubbing uses a solution of pH about eight to absorb any residual chlorine or acid products of the oxidation.

The process is particularly useful to mills producing semi-bleached or bleached kraft pulp because these normally have bleach plant effluents containing residual chlorine, hypochlorous acid, and calcuim hypochlorite, and also large quantities of spent caustic solutions with an appreciable residue of sodium hydroxide. Naturally, the oxidants must be used in a chemically adequate amount, and if bleach effluents with only a small residue of chlorine are employed, the total volume will be large. Thus, the scrubbing apparatus will be rather big, but it is inherently simple and need not be overly expensive either to build or operate. Provided the necessary ducts are not too troublesome, the scrubber can be used to deodorize other gas streams as well.

## SOME DIFFICULTIES

Despite what has been said, kraft mill odor control measures are still by no means complete or fully effective. Black liquor oxidation is not a complete answer, though it would be difficult to imagine an effective control system that did not include it. Figure 7 depicts a mill equipped with an oxidation tower arranged to absorb digester gases and fitted with an exhaust gas scrubber, and with the direct contact evaporator eliminated. Such a mill would be expected to give off a minimum of odor provided the load on the furnace was not excessive. One or two new mills using this system are now nearing completion.

The greatest single obstacle to the general introduction of oxidation towers is the tendency of the black liquor derived from resinous species of wood to foam enthusiastically and with the slightest encouragement—or no encouragement at all. The foam handling problems are sufficiently serious to create substantial operating difficulties.

The surface active substances responsible for the foam are largely soapy or soap-like products formed by the action of the alkaline cooking liquors on the resinous constituents of the wood. Neutral extractable substances, including turpentine, are also present and may contribute to the problem.

As long as no substantial markets exist for these chemical by-products of the pulping reaction, they are best disposed of by burning and so the temptation is to process them through to the recovery plant with the rest of the black liquor if this is at all possible, even though it means a constant battle with the foam.

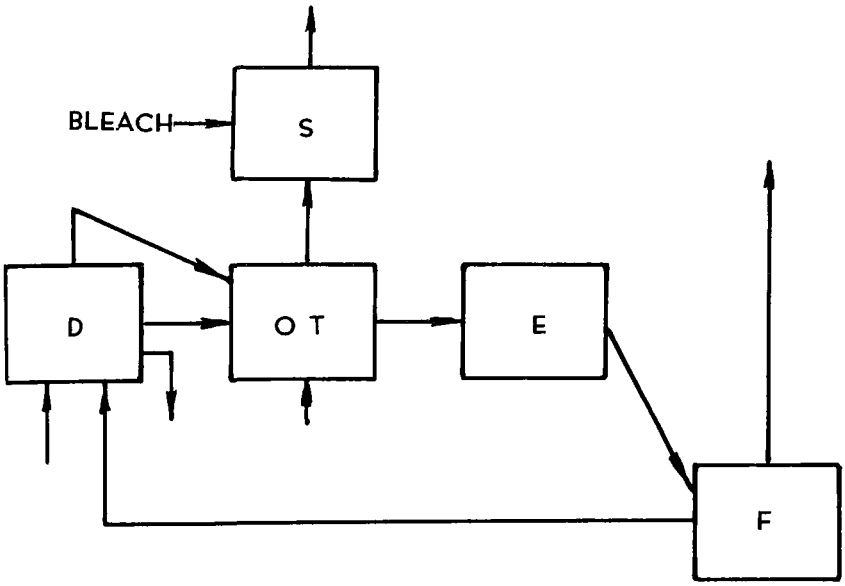


Figure 7.

Fortunately there is a growing demand for at least some of these substances, so that a few mills are beginning to install equipment for recovering them from the weak black liquor. This is bound to improve the situation with regard to foaming, and together with improved methods of foam handling, such as ultrasonic breakers, it is likely that black liquor oxidation will soon find its way into mills where it has been heretofore regarded as impractical.

## ODOR ANALYSES

As long as the nose remains the only instrument for detecting the odorous materials at the low concentrations at which they are found in the open air at some distance from their origin, the objective evaluation of control measures will be difficult.

Developments in analytical methods, and especially in gas chromatography, give some promise of replacing subjective appraisal by instrumented measurement.

Figure 8 shows a convenient type of stainless steel collecting tube, which has been developed for collecting samples in the open air. The procedure is quite simple. In Figure 9 a small pump operated from a car battery is used to draw the air first through a drying train and then through the collecting tubes. The tubes can then be capped and packed in dry ice for shipment to the laboratory, where they are connected to a

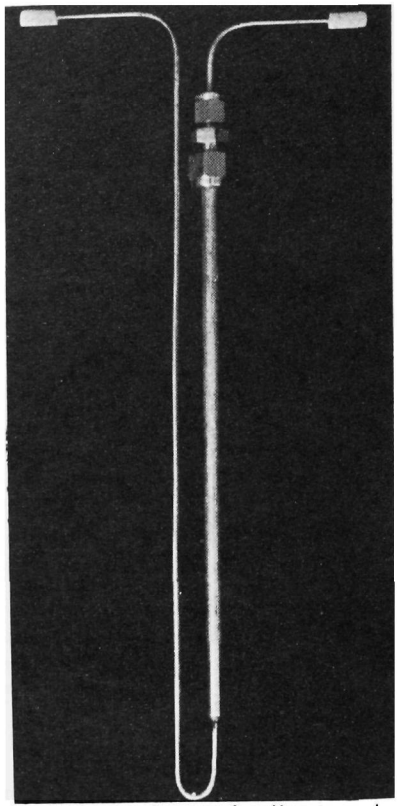

Figure 8. Stainless steel collecting tube.

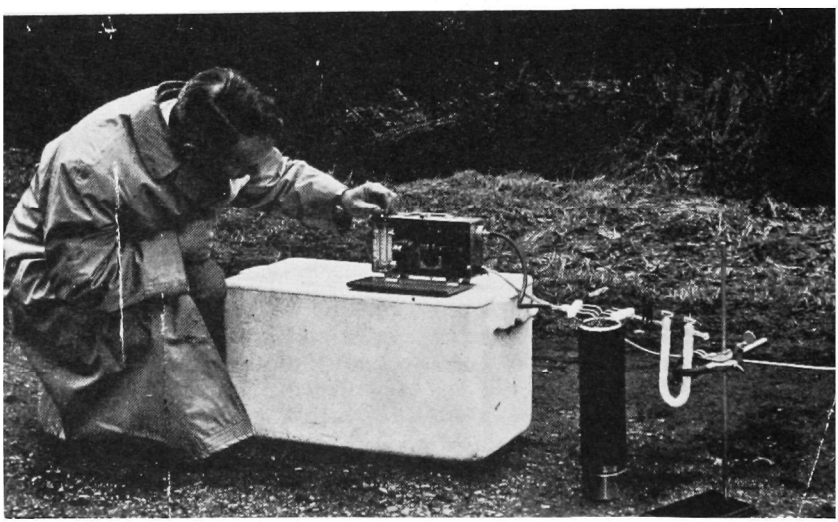

Figure 9. Collecting samples in the field. Apparatus consists of a drying tube, three collectors in parallel, and a battery-operated pump, together with a foamed plastic refrigerator for the samples.

gas chromatograph and the sample transferred as shown in Figure 10. Figure 11 shows the chromatogram of a sample collected about a quarter of a mile down wind from a pulp mill at a point where the odor was

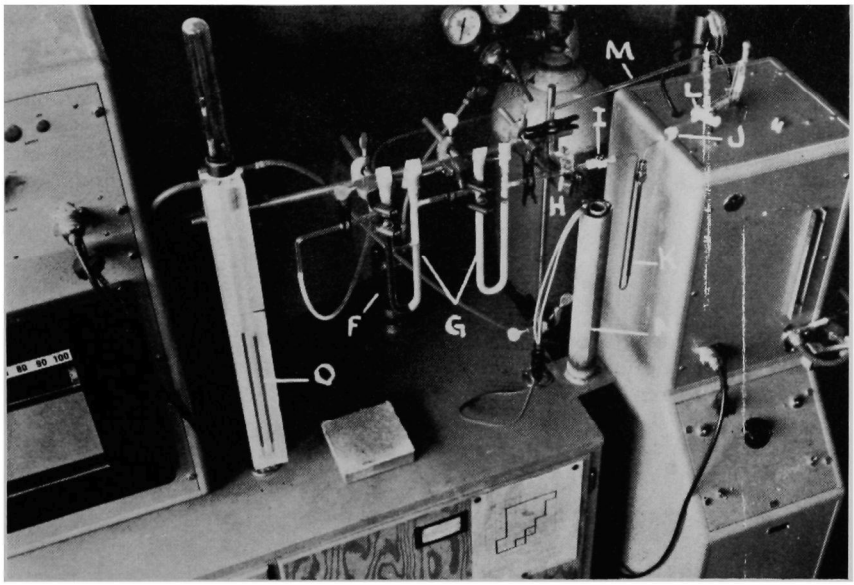


Figure 10. Apparatus for chromatographing the samples. The collecting tube K is warmed by the heater N and the sample is swept into the top of the chromatographic column through the tap L.

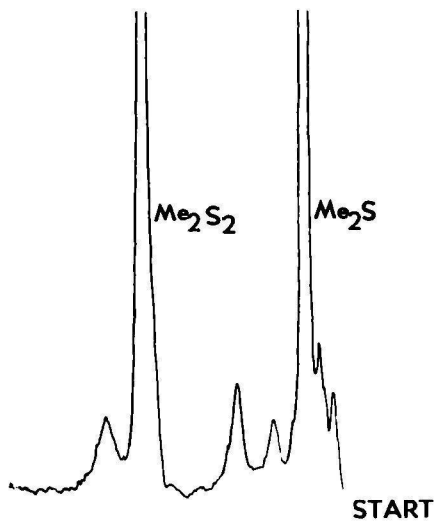


Figure 11.

noticeable but by no means strong. The pulp mill was located in the eastern United States and the sample was shipped by air 3,000 miles to British Columbia to be analyzed in the chromatograph.

Unfortunately, the technique is still not fully perfected because samples collected in urban areas or in the vicinity of major highways contain so many extraneous substances derived mainly from motor vehicle exhausts (though in at least one case a manure pile made its contribution), that the chromatograms are too cluttered to be very useful. The problem is not insurmountable, and could, for example, be nicely taken care of by equipping the chromatograph with a sufficiently sensitive detector that responded only to compounds containing sulfur.

## ACKNOWLEDGMENTS

My name is given as author of this paper, but it should more properly be given as compiler. To my colleagues, past and present at the British Columbia Research Council and especially to F. E. Murray, G. C. B. Cave, J. B. Risk, and I. H. Williams must go the credit for whatever is novel in what I have said.

☆ U. S. GOVERNMENT PRINTING OFFICE : 1968 O - 307-332