MIDWEST RESEARCH INSTITUTE

MRI REPORT

STATIONARY SOURCE TESTING OF A MISSOURI-TYPE CHARCOAL KILN

DRAFT

DRAFT REPORT
April 8, 1976

Midwest Research Institute
EPA Contract No. 68-02-1403
MRI Project No. 3927-C(14)

For

Region VII
Environmental Protection Agency
1735 Baltimore
Kansas City, Missouri 64108

Attn: Mr. Charles W. Whitmore

425 VOLKER BOULEVARD, KANSAS CITY, MISSOURI 64110 • 816 561-0202

MRI – NORTH STAR DIVISION 3100 38th Avenue South, Minneapolis, Minnesota 55406 • 612 721-6373

MRI WASHINGTON, D.C. 20005 – 1522 K STREET, N.W. • 202 293-3800

STATIONARY SOURCE TESTING OF A MISSOURI-TYPE CHARCOAL KILN

by

William H. Maxwell

DRAFT

DRAFT REPORT
April 8, 1976

Midwest Research Institute
EPA Contract No. 68-02-1403
MRI Project No. 3927-C(14)

For

Region VII
Environmental Protection Agency
1735 Baltimore
Kansas City, Missouri 64108

Attn: Mr. Charles W. Whitmore

DRAFT

PREFACE

The work reported herein was conducted by Midwest Research Institute (MRI) under Environmental Protection Agency (EPA) Contract No. 68-02-1403, Task No. 14.

The project was under the technical supervision of Mr. Paul C. Constant, Jr., Head, Environmental Measurements Section of the Physical Sciences Division. Mr. William Maxwell served as project chief and was assisted by Mr. Bruce DaRos. The analysis of the samples was done by Dr. Clarence Haile, Ms. Carol Green, and Ms. Mary Woodfin under the technical supervision of Dr. Mark Marcus. Mr. Thomas Merrifield was responsible for the data reduction and computer analysis. Some sample analysis was done by Kansas City Testing Laboratories under the direction of Mr. A. G. Cloud, Chief Chemist.

Approved for:

MIDWEST RESEARCH INSTITUTE

Paul C. Constant, Jr.
Program Manager

L. J. Shannon, Assistant Director
Physical Sciences Division

April 8, 1976

DRAFT

DRAFT

TABLE OF CONTENTS

		Page
I.	Introduction	1
II.	Summary and Discussion of Results	2
	A. Mass and Total Organics	2
	B. Polycyclic Organic Materials	10
	C. Visible Emissions	14
	D. Heat of Combustion	14
III.	Process Description and Operation	16
	A. Process Description	16
	B. Process Operation	19
IV.	Sampling and Analytical Procedures	21
	A. Sampling	21
	B. Analysis	39
V.	Recommendations and Comments	42
References		44
Appendix A - Results of Analysis - Computer Computations (Total Particulate)		45
Appendix B - Sample Calculations		71
Appendix C - Results of Analysis - Computer Computations (Total Organic)		78
Appendix D - Results of Analysis - Computer Computations (Polycyclic Organic Materials)		105
Appendix E - Flue Gas Combustion Computations		147
Appendix F - Computation of Kiln Volume		157

DRAFT

DRAFT

TABLE OF CONTENTS (Concluded)

	Page
Appendix G - Preliminary Runs - Field Data	162
Appendix H - Computation for Isokinetic Sampling	173
Appendix I - Table of Metric Equivalents	176

List of Tables

Table	Title	Page
1	Summary of Particulate Results	3
2	Summary of Organic Results	5
3	Summary of Mass and Organic Data	6
4	Summary of Mass Emission Factors (Charcoal Production)	8
5	Summary of Mass Emission Factors (Wood Utilization)	9
6	Summary of ORSAT Results	11
7	Summary of Polycyclic Organic Material Results	12
8	Heats of Combustion	15
A-1	Particulate Data and Calculated Values, Run 1	46
A-2	Particulate Data and Calculated Values, Run 3	47
A-3	Particulate Data and Calculated Values, Run 5	49
A-4	Particulate Data and Calculated Values, Run 7	51
A-5	Particulate Data and Calculated Values, Run 9	53
A-6	Particulate Data and Calculated Values, Run 11	55

DRAFT

DRAFT

List of Tables (Continued)

Table	Title	Page
A-7	Particulate Data and Calculated Values, Run 13	57
A-8	Particulate Data and Calculated Values, Run 14	58
A-9	Particulate Emission Data	59
A-10	Particulate Emission Data (Metric Results)	62
A-11	Summary of Results (Particulate)	65
A-12	Summary of Results--Metric Units (Particulate)	68
C-1	Organic Data and Calculated Values, Run 1	79
C-2	Organic Data and Calculated Values, Run 3	80
C-3	Organic Data and Calculated Values, Run 5	83
C-4	Organic Data and Calculated Values, Run 7	85
C-5	Organic Data and Calculated Values, Run 9	87
C-6	Organic Data and Calculated Values, Run 11	89
C-7	Organic Data and Calculated Values, Run 13	91
C-8	Organic Data and Calculated Values, Run 14	92
C-9	Organic Emission Data	93
C-10	Organic Emission Data (Metric Results)	96
C-11	Summary of Results (Organic)	99
C-12	Summary of Results--Metric Units (Organic)	102
D-1	Benz[c]phenanthrene Data and Calculated Values, Run 2	106
D-2	Benz[c]phenanthrene Data and Calculated Values, Run 4	107

DRAFT

DRAFT

List of Tables (Continued)

Table	Title	Page
D-3	Benz[c]phenanthrene Data and Calculated Values, Run 6	108
D-4	Benz[c]phenanthrene Data and Calculated Values, Run 8	109
D-5	Benz[c]phenanthrene Data and Calculated Values, Run 10	110
D-6	Benz[c]phenanthrene Data and Calculated Values, Run 12	111
D-7	Benz[c]phenanthrene Emission Data	112
D-8	Benz[c]phenanthrene Emission Data (Metric Results)	114
D-9	Summary of Results (Benz[c]phenanthrene)	116
D-10	Summary of Results--Metric Units (Benz[c]phenanthrene)	118
D-11	Benz[a]pyrene Data and Calculated Values, Run 4	120
D-12	Benz[a]pyrene Data and Calculated Values, Run 6	121
D-13	Benz[a]pyrene Data and Calculated Values, Run 8	122
D-14	Benz[a]pyrene Data and Calculated Values, Run 10	123
D-15	Benz[a]pyrene Data and Calculated Values, Run 12	124
D-16	Benz[a]pyrene Emission Data	125
D-17	Benz[a]pyrene Emission Data (Metric Results)	127
D-18	Summary of Results (Benz[a]pyrene)	129
D-19	Summary of Results--Metric Units (Benz[a]pyrene)	131
D-20	POM-Like Material Data and Calculated Values, Run 2	133
D-21	POM-Like Material Data and Calculated Values, Run 4	134
D-22	POM-Like Material Data and Calculated Values, Run 6	135
D-23	POM-Like Material Data and Calculated Values, Run 8	136

DRAFT

DRAFT

List of Tables (Concluded)

Table	Title	Page
D-24	POM-Like Material Data and Calculated Values, Run 10. .	137
D-25	POM-Like Material Data and Calculated Values, Run 12. .	138
D-26	POM-Like Material Emission Data	139
D-27	POM-Like Material Emission Data (Metric Results). . . .	141
D-28	Summary of Results (POM-Like Material).	143
D-29	Summary of Results--Metric Units (POM-Like Material). .	145
G-1	Preliminary Data and Calculated Values, Run 1-P	163
G-2	Preliminary Data and Calculated Values, Run 2-P	164
G-3	Preliminary Data and Calculated Values, Run 3-P	165
G-4	Preliminary Data and Calculated Values, Run 4-P	166
G-5	Preliminary Data and Calculated Values, Run 5-P	167
G-6	Preliminary Data and Calculated Values, Run 6-P	168
G-7	Preliminary Emission Data	169
G-8	Preliminary Emission Data (Metric Results).	171

List of Figures

Figure	Title	Page
1	The Missouri-Type Charcoal Kiln	17
2	Drawings of Sampled Kiln.	20
3	Schedule of Burn and Testing Cycles	22
4	Preliminary Sampling Train A: Runs Nos. 1-P and 2-P. .	25

DRAFT

DRAFT

List of Figures (Concluded)

Figure	Title	Page
5	Preliminary Sampling Train B: Run No. 3-P.	27
6	Preliminary Sampling Train C: Run No. 4-P.	27
7	Preliminary Sampling Train D: Run No. 5-P.	33
8	Preliminary Sampling Train E: Run No. 6-P.	33
9	Flammability Limits Apparatus	37
10	Cryogenic Sampling Apparatus.	38

DRAFT

DRAFT

NOTICE

This document is a preliminary draft. It has not been formally released by EPA and should not at this stage be construed to represent Agency policy. It is being circulated for comment on its technical accuracy and policy implications.

I. INTRODUCTION

This report presents the results of source testing performed during the period December 2 to 9, 1975, by MRI on a Missouri-type charcoal kiln at the Wulff Charcoal Company, Vienna, Missouri. Testing for particulate, total organic, and polycyclic organic material (POM) emissions was conducted on each of the eight uncontrolled stacks of the kiln during a burn cycle, a continuous process.

The testing was not done for compliance reporting but rather for research into the general amount and types of emissions present during operation of a typical kiln. The data are to be used for the possible establishment of new source emission standards and for evaluation of potential control techniques for the charcoal industry in Missouri. The testing was also done as a means of developing and evaluating source sampling methodology for charcoal kilns. The scope of work for this project specified:

DRAFT

DRAFT

1. At least one sample per day for particulate, total organic, and POM emissions over the period of a burn cycle.

2. Flammability limits sampling.

3. Visible emission observations.

The following sections of this report present:

1. Summary and discussion of results;

2. Process description and operation;

3. Sampling and analytical procedures; and

4. Recommendations and comments.

II. SUMMARY AND DISCUSSION OF RESULTS

A. Mass and Total Organics

Table 1 presents a summary of the particulate results for the eight runs. Data are presented as grains per dry standard cubic foot (gr/dscf), milligrams per normal cubic meter (mg/ncm), pounds per hour (lb/hr), and kilograms per hour (kg/hr). Computer printouts of the field data and reductions may be found in Appendix A. Sample calculations are found in Appendix B.

The runs are broken down into three sections. Run No. 1 was completed during the 3-hr kiln start-up period before the doors were closed and sealed. The resulting values may be considered representative of emissions found during this period. They should only be considered

DRAFT

TABLE 1

SUMMARY OF PARTICULATE RESULTS

Run No.	Date	Total particulate load[a] Partial[b] gr/dscf[c]	Partial[b] mg/ncm[c]	Partial[b] lb/hr[c]	Partial[b] kg/hr[c]	Total[b] gr/dscf[c]	Total[b] mg/ncm[c]	Total[b] lb/hr[c]	Total[b] kg/hr[c]
	Start-up								
1	December 2, 1975	1.09	2,487	180[d]	82[d]	1.32	3,022	219[d]	99[d]
	Burn-cycle								
3	December 3	0.36	815	1.04	0.46	0.80	1,829	2.32	0.97
5	December 4	0.76	1,734	2.16	1.05	2.21	5,054	6.24	2.83
7	December 5	2.95	6,751	6.72	3.06	<17.40	39,824	39.84	18.06
9	December 6	1.64	3,745	3.43	1.55	3.77	8,628	7.91	3.58
11	December 7	2.43	5,553	5.44	2.46	5.21	11,917	11.68	5.29
14	December 8	6.29	14,383	9.03	4.10	9.21	21,074	13.23	6.01
	Other								
13	December 8	4.20	9,602	1.57	0.71	6.82	15,618	2.56	1.16

a/ Total for all stacks emitting during test; 8 stacks for Runs Nos. 3, 5, 7, and 11; 7 stacks for Runs Nos. 9 and 14; 1.67 stacks for Run No. 13; 1 stack (nominal) for Run No. 1; grains per dry standard cubic foot and milligrams per normal cubic meter are irrespective of number of stacks.

b/ Partial = Front half of sampling train only (probe, cyclone, first filter)
Total = Entire train

c/ gr/dscf = Grains per dry standard cubic foot
mg/ncm = Milligrams per normal cubic meter
lb/hr = Pounds emissions per hour
kg/hr = Kilograms emissions per hour

d/ Values for Run No. 1 are approximate and based on a nominal 10-ft diameter stack.

DRAFT

DRAFT

DRAFT

approximate due to the sampling method as will be reported later. Runs Nos. 3, 5, 7, 9, 11, and 14 are complete daily runs conducted each full day of the burn cycle. These data indicate the trend of emissions over the cycle of the burn. Run No. 13 was a partial run covering only one and two-thirds stacks on 1 day. These data may indicate those emissions from a lesser number of stacks but were not used in subsequent emission factor calculations.

Sampling volumes for the six daily runs varied from 16.80 dscf (2.65 ncm) to 93.53 dscf (0.48 ncm). Values for the percent isokinetic sampling rate varied from 94.0 to 104.6.

Table 2 presents a summary of the organic results for the eight runs. These data are based on the ether-chloroform extractable portion of the particulate samples and are presented in the same form as the particulate data. Computer printouts of the field data and reductions are found in Appendix C. The same raw field data and sample calculations as for the particulate runs apply to the organic runs.

The relationship between the total particulate catch and the organic fraction is shown in Table 3. The emission rate from the total mass calculations is compared with that of the organic fractions. The organic fraction of the total mass emissions is in the range of 66 to 77%.

DRAFT

TABLE 2

SUMMARY OF ORGANIC RESULTS

Run No.	Date	Total organic load[a] Partial[b] gr/dscf[c]	Partial[b] mg/ncm[c]	Partial[b] lb/hr[c]	Partial[b] kg/hr[c]	Total[b] gr/dscf[c]	Total[b] mg/ncm[c]	Total[b] lb/hr[c]	Total[b] kg/hr[c]
	Start-up								
1	December 2, 1975	0.77	1,755	127[d]	58[d]	0.89	2,045	148[d]	67[d]
	Burn-cycle								
3	December 3	0.30	593	0.72	0.34	0.55	1,269	1.60	0.73
5	December 4	0.60	1,372	1.68	0.79	1.62	3,718	4.56	2.08
7	December 5					13.45	30,782	30.80	13.95
9	December 6	1.26	2,875	2.66	1.19	2.86	6,535	6,535	1.94
11	December 7	1.92	4,390	4.32	2.71	3.54	8,105	8,105	3.59
14	December 8	4.50	10,300	6.44	2.94	6.38	14,608	9.17	4.17
	Other								
13	December 8	2.70	6,169	1.02	0.46	4.52	10,334	1.68	0.77

a/ Total for all stacks emitting during test; 8 stacks for Runs Nos. 3, 5, 7, and 11; 7 stacks for Runs Nos. 9 and 14; 1.67 stacks for Run No. 13; 1 stack (nominal) for Run No. 1; grains per dry standard cubic foot and milligrams per normal cubic meter are irrespective of number of stacks.

b/ Partial = Front half of sampling train only (probe, cyclone, first filter)
Total = Entire train

c/ gr/dscf = Grains per dry standard cubic foot
mg/ncm = Milligrams per normal cubic meter
lb/hr = Pounds emissions per hour
kg/hr = Kilograms emissions per hour

d/ Values for Run No. 1 are approximate and based on a nominal 10-ft diameter stack.

DRAFT

DRAFT

DRAFT

TABLE 3

SUMMARY OF MASS AND ORGANIC DATA

Run No.	Date	Total mass[a] lb/hr[b]	Total mass[a] kg/hr[b]	Total organic[a] lb/hr[b]	Total organic[a] kg/hr[b]	Percent organic
	Start-up					
1	December 2, 1975	219[c]	99[c]	149[c]	67[c]	68
	Burn-cycle					
3	December 3	2.32	0.97	1.60	0.73	69
5	December 4	6.24	2.83	4.56	2.08	73
7	December 5	39.84	18.06	30.80	13.95	77
9	December 6	7.91	3.58	5.95	1.94	75
11	December 7	11.68	5.29	7.92	3.59	68
14	December 8	13.23	6.01	9.17	4.17	69
	Other					
13	December 8	2.56	1.16	1.68	0.77	66

a/ Total for all stacks emitting during test; 8 stacks for Runs Nos. 3, 5, 7, and 11; 7 stacks for Runs Nos. 9 and 14; 1.67 stacks for Run No. 13; 1 stack (nominal) for Run No. 1; data is for entire sampling train.

b/ lb/hr = Pounds emissions per hour
kg/hr = Kilograms emissions per hour

c/ Values for Run No. 1 are approximate and based on a nominal 10-ft diameter stack.

DRAFT

DRAFT

Table 4 presents a summary of the mass emission factors (unit emissions per unit charcoal produced) for each run as well as the total for the burn cycle. These emission factors have been computed by three methods. In the first method, the data for each run are taken to represent that of the 24-hr period encompassing the run time. The data for the 3-hr start-up period are added to form the total emission factor for the burn cycle. This method does not include the shut-down period of the cycle. The second method utilizes the data from each run as representative of the emissions over a 28-hr period around each sample time. This method includes the start-up and shut-down periods. The last method takes the data from each run as being consistent with that of a 27.5-hr period around each sample time. The data for the start-up period are added to form the total while the shut-down period is included. These methods yield total emission factors ranging from 126.4 to 160.5 lb of emissions per ton of charcoal produced (63.2 to 80.2 kg of emissions per metric ton of charcoal produced).

Table 5 presents the same data but figured as unit emissions per unit wood used in the charcoal production. The data were computed by the same three methods as that for Table 4. The results range from 26.8 to 34.1 lb emissions per ton wood utilized (13.4 to 17.0 kg emissions per metric ton wood utilized).

DRAFT

TABLE 4

SUMMARY OF MASS EMISSION FACTORS (CHARCOAL PRODUCTION)

Run No.	METHOD I[a] Period covered	Total mass emissions lb[d]	Total mass emissions kg[d]	Emission factor lb/ton[d]	Emission factor kg/Mton[d]	METHOD II[b] Period covered	Total mass emissions lb[d]	Total mass emissions kg[d]	Emission factor lb/ton[d]	Emission factor kg/Mton[d]	METHOD III[c] Period covered	Total mass emissions lb[d]	Total mass emissions kg[d]	Emission factor lb/ton[d]	Emission factor kg/Mton[d]
1[e]	1240-1540 December 2, 1975	656	298	36.5	18.2						1240-1540 December 2, 1975	656	298	36.5	18.2
3	1540 December 2 1540 December 3	56	25	3.1	1.5	1240 December 2 1640 December 3	65	29	3.6	1.8	1540 December 2 1910 December 3	64	29	3.5	1.8
5	1540 December 3 1540 December 4	150	68	8.3	4.2	1640 December 3 2040 December 4	175	79	9.7	4.9	1910 December 3 2240 December 4	172	78	9.5	4.8
7	1540 December 4 1540 December 5	956	433	53.1	26.5	2040 December 4 0040 December 6	1,116	506	62.0	31.0	2240 December 4 0210 December 6	1,096	497	60.9	30.4
9	1540 December 5 1540 December 6	190	86	10.5	5.3	0040 December 6 0440 December 7	221	100	12.3	6.1	0210 December 6 0540 December 7	218	99	12.1	6.0
11	1540 December 6 1540 December 7	280	127	15.6	7.8	0440 December 7 0840 December 8	327	148	18.2	9.1	0540 December 7 0910 December 8	321	145	17.8	8.9
14	1540 December 7 1540 December 8	318	144	17.6	8.8	0840 December 8 1240 December 9	370	168	20.6	10.3	0910 December 8 1240 December 9	364	165	20.2	10.1
Total	147 hr	2,606	1,181	144.7	72.3	168 hr	2,274	1,030	126.4	63.2	168 hr	2,891	1,311	160.5	80.2

a/ Based on 24-hr periods per run plus 3 hr start-up; excludes shutdown.
b/ Based on 28-hr periods per run including start-up and shutdown periods.
c/ Based on 27.5-hr periods per run plus 3 hr start-up; includes shutdown.
d/ lb = Pounds emissions
kg = Kilograms emissions
lb/ton = Pounds emissions per ton charcoal produced (based on 18 tons charcoal)
kg/Mton = Kilograms emissions per metric ton charcoal produced (based on 16.33 Mtons charcoal)
e/ Values for Run No. 1 are approximate.

DRAFT

DRAFT

TABLE 5

SUMMARY OF MASS EMISSION FACTORS (WOOD UTILIZATION)

	METHOD I[a]					METHOD II[b]					METHOD III[c]				
		Total mass emissions		Emission factor			Total mass emissions		Emission factor			Total mass emissions		Emission factor	
Run No.	Period covered	lb[d]	kg[d]	lb/ton[d]	kg/Mton[d]	Period covered	lb[d]	kg[d]	lb/ton[d]	kg/Mton[d]	Period covered	lb[d]	kg[d]	lb/ton[d]	kg/Mton[d]
1[e]	1240-1540 December 2, 1975	656	298	7.7	3.9						1240-1540 December 2, 1975	656	298	7.7	3.9
3	1540 December 2 1540 December 3	56	25	0.7	0.3	1240 December 2 1640 December 3	65	29	0.8	0.4	1540 December 2 1910 December 3	64	29	0.8	0.4
5	1540 December 3 1540 December 4	150	68	1.8	0.9	1640 December 3 2040 December 4	175	79	2.1	1.0	1910 December 3 2240 December 4	172	78	2.0	1.0
7	1540 December 4 1540 December 5	956	433	11.3	5.6	2040 December 4 0040 December 6	1,116	506	13.1	6.6	2240 December 4 0210 December 6	1,096	497	12.9	6.4
9	1540 December 5 1540 December 6	190	86	2.2	1.1	0040 December 6 0440 December 7	221	100	2.6	1.3	0210 December 6 0540 December 7	218	99	2.6	1.3
11	1540 December 6 1540 December 7	280	127	3.3	1.6	0440 December 7 0840 December 8	327	148	3.8	1.9	0540 December 7 0910 December 8	321	145	3.8	1.9
14	1540 December 7 1540 December 8	318	144	3.7	1.9	0840 December 8 1240 December 9	370	168	4.4	2.2	0910 December 8 1240 December 9	364	165	4.3	2.1
Total	147 hr	2,606	1,181	30.7	15.3	168 hr	2,274	1,030	26.8	13.4	168 hr	2,891	1,311	34.1	17.0

a/ Based on 24-hr periods per run plus 3 hr start-up; excludes shutdown.
b/ Based on 28-hr periods per run including start-up and shutdown periods.
c/ Based on 27.5-hr periods per run plus 3 hr start-up; includes shutdown.
d/ lb = Pounds emissions
kg = Kilograms emissions
lb/ton = Pounds emissions per ton wood utilized (based on 84.96 tons wood)
kg/Mton = Kilograms emissions per metric ton wood utilized (based on 77.07 Mtons wood)
e/ Values for Run No. 1 are approximate.

DRAFT

DRAFT

DRAFT

Table 6 presents a summary of the ORSAT results for the stack gas compositions. Values for the percent by volume of carbon monoxide and carbon dioxide generally increased over the period of the burn while that for oxygen generally decreased. These values may be in error somewhat due to the presence of volatile hydrocarbons in the gas stream, but are thought to be representative.

Percent moisture values ranged from 25.5 to 35% (by volume) for the six daily runs. These values are at or slightly below moisture saturation. The value for the volume of water collected was back-calculated using the standard equation for those runs at moisture saturation (these values were needed for entry with the computer program). The value for Δp at each point found in the computer printouts was back-calculated from the input velocity data, since no direct Δp readings were obtained by pitot readings due to the low flow. These values are shown merely to indicate approximate readings that would be expected.

B. Polycyclic Organic Materials

Table 7 presents a summary of the POM results for the six runs. Data are presented as for the mass and total organics. Computer printouts of the field data and reductions may be found in Appendix D. The sample calculations are the same as for the mass data.

DRAFT

TABLE 6

SUMMARY OF ORSAT RESULTS

Date	Stack	Time	Percent by volume CO_2	O_2	CO	N_2	Molecular weight dry stack gas (lb/lb-mole)
December 3, 1975	7	1000	9.80	10.67	1.73	77.80	29.99
	3	1255	8.67	11.53	1.73	78.07	29.85
	5	1530	14.40	5.33	2.20	78.07	30.52
	Average (Runs Nos. 1, 2, 3)		10.96	9.17	1.88	77.98	30.12
December 4, 1975	5	0900	17.00	6.87	4.00	72.13	30.99
	8	1230	13.00	7.73	1.87	77.40	30.39
	Average (Runs Nos. 4, 5)		15.00	7.30	2.93	74.77	30.69
December 5, 1975	6	0830	12.67	8.53	2.53	76.27	30.37
	2	1200	12.27	11.73	2.60	73.40	30.43
	8	1400	26.73	7.40	7.27	58.60	32.57
	Average (Runs Nos. 6, 7)		17.22	9.22	4.13	69.42	31.12
December 6, 1975	7	0900	14.60	7.93	1.33	76.13	30.65
	7	1030	17.53	4.87	1.67	75.93	31.00
	Average (Runs Nos. 8, 9)		16.07	6.40	1.50	76.03	30 83
December 7, 1975	4	0940	22.17	2.37	7.07	68.40	31.64
	8	1130	21.00	2.40	6.40	70.20	31.46
	6	1300	11.40	10.60	3.00	75.00	30.25
	Average (Runs Nos. 10, 11)		18.19	5.12	5.49	71.20	31.12
December 8, 1975	8	0900	22.67	0.87	8.20	68.27	31.66
	1	1300	22.00	1.40	5.13	71.47	31.58
	Average (Runs Nos. 12, 13, 14)		22.33	1.13	6.67	69.87	31.62

DRAFT

DRAFT

TABLE 7

SUMMARY OF POLYCYCLIC ORGANIC MATERIAL RESULTS

Run No.	Date	POM material[a]	Total POM load[b] Partial[c] gr/dscf[d]	Partial[c] mg/ncm[d]	Partial[c] lb/hr[d]	Partial[c] kg/hr[d]	Total[c] gr/dscf[d]	Total[c] mg/ncm[d]	Total[c] lb/hr[d]	Total[c] kg/hr[d]
	Burn-cycle									
2	December 3, 1975	1	15.2	34.7	44.2	20.0	15.2	34.7	44.2	20.0
		2	ND[e]	ND	ND	ND	ND	ND	ND	ND
		3	339.7	777.3	989.3	448.7	370.2	847.2	1,078.2	489.0
4	December 4	1	3.3	7.5	9.4	4.2	22.6	51.6	64.6	29.3
		2	3.3	7.5	9.4	4.2	13.8	31.5	39.4	17.9
		3	137.8	315.3	394.6	179.0	205.3	469.7	587.8	266.6
6	December 5	1	12.4	28.4	27.6	12.6	12.4	28.4	27.6	12.6
		2	3.6	8.3	8.0	3.7	8.1	18.6	18.1	8.2
		3	77.9	178.3	173.1	78.6	118.6	271.4	263.5	119.5
8	December 6	1	ND	ND	ND	ND	26.7	61.0	55.9	25.3
		2	ND	ND	ND	ND	8.9	20.3	18.6	8.5
		3	ND	ND	ND	ND	257.3	588.7	538.7	244.4
10	December 7	1	ND	ND	ND	ND	12.7	29.1	24.7	11.2
		2	ND	ND	ND	ND	20.7	47.4	40.3	18.2
		3	197.3	451.6	383.8	174.1	513.8	1,174.1	997.8	452.6
12	December 8	1	ND	ND	ND	ND	51.0	116.7	72.8	33.0
		2	ND	ND	ND	ND	60.2	137.7	85.9	38.9
		3	837.0	1,915.4	1,194.7	541.9	1,485.3	3,399.0	2,120.0	961.7

a/ 1 = Benz[c]phenanthrene
2 = Benz[a]pyrene
3 = POM-like material
All other POM's not detectable.

b/ Total for all stacks emitting during tests; 8 stacks for Runs Nos. 2, 4, 6, and 10; 7 stacks for Runs Nos. 8 and 12; grains per dry standard cubic feet and milligrams per normal cubic meters irrespective of number of stacks.

c/ Partial = Front half of sampling train only (probe, first filter)
Total = Entire train

d/ gr/dscf = Grains per dry standard cubic foot x 10^{-6}
mg/ncm = Milligrams per normal cubic meters x 10^{-3}
lb/hr = Pounds emissions per hour x 10^{-6}
kg/hr = Kilograms emissions per hour x 10^{-6}

e/ ND = Not detectable.

DRAFT
DRAFT

DRAFT

The six sets of samples were analyzed for the following POMs:

Benz[c]phenanthrene

Benz[a]pyrene

Dibenz[a,h]anthracene

3-Methylcholanthrene

7,12-Dimethylbenz[a]anthracene

3,4,5,6-Dibenzocarbazole

Other materials found on the chromatograms were classified as POM-like materials. These were defined as the total of unassigned peaks eluting after 3-methylcholanthrene, and may reflect the degree of clean-up. They were classed together and reported like the other POMs. Detectable quantities were found only for benz[c]phenanthrene, benz[a]pyrene, and the POM-like material. Quantities for the other POMs, if present, were below the detection limits for the given sample volumes. The ranges of the detection limits for the various POMs were as follows:

Benz[c]phenanthrene: 1.2 to 4.1 μg/sample

Benz[a]pyrene: 1.0 to 2.0 μg/sample

Dibenz[a,h]anthracene: 1.5 to 4.5 μg/sample

3-Dimethylcholanthrene: 0.4 to 0.8 μg/sample

7,12-Dimethylbenz[a]anthracene: 1.0 to 2.0 μg/sample

3,4,5,6-Dibenzocarbazole: 4.0 to 10.0 μg/sample

DRAFT

DRAFT

C. Visible Emissions

Observations of the visible emissions according to procedures established in EPA's Method 9[1/] were not made. However, frequent observation of the stacks by two trained, but not currently certified, observers indicated that the opacity was seldom, if ever, lower than 100%. As compliance testing was not involved, it is felt that these observations are valid as indicators of the general state of the visible emissions from an operating charcoal kiln.

As the stack gas was at or near moisture saturation, some steam may be included in the visible emissions, causing problems with the readings. The plumes of the several stacks and kilns readily mingle, making readings from any one stack difficult at times.

D. Heat of Combustion

Table 8 presents a summary of the heat of combustion data for the five cryogenic samples. The heat of combustion values are given for both the water and tar and oil fractions as recovered from the sampling apparatus. The heats of vaporization given are for the amounts of water collected. The net heat available from the flue gas stream is found by summing the heats of combustion for each sample and subtracting the respective heats of vaporization. The air/fuel ratios are approximate values for the volume of air per unit volume of flue gas needed for stoichiometric combustion of the flue gas. The stoichiometric heat indicates

DRAFT

TABLE 8

HEATS OF COMBUSTION

Date	Volume flue gas sampled (cf)[b]	Sample No.	Fraction	Sample weight (g)[b]	Heat of combustion[a] (cal/g)[b]	Heat of vaporization (water) (cal)[b]	Net heat available from flue gas stream (cal)[b]	Air/fuel ratio	Stoichiometric heat (cal)[b]
December 4, 1975[c]	0.84	1-1	Water	8.4	296	- 4,685	- 1,485	26	- 25,000
		1-2	Tar and oil	0.6	1,185				
December 6[c]	0.94	2-1	Water	4.6	227	- 2,565	+ 2,835	26	- 15,300
		2-2	Tar and oil	0.6	7,256				
December 7[c]	1.88	3-1	Water	16.3	153	- 8,845	+ 2,165	50	- 21,300
		3-2	Tar and oil	1.2	7,097				
December 8[d]	2.57	4-1	Water	11.0	173	- 5,580	+ 1,650	98	- 16,600
		4-2	Tar and oil	0.6	8,877				
	2.52	5-1	Water	11.8	855	- 5,985	+ 6,930	98	- 16,600
		5-2	Tar and oil	0.6	4,715				

a/ Analysis done by Kansas City Testing Laboratories.
b/ cf = Cubic feet (actual)
cal/g = Calories per gram
cal = calories
g = grams
c/ Samples collected under dry ice-alcohol conditions.
d/ Samples collected under ice-salt water conditions.

DRAFT
DRAFT

DRAFT

the quantity of heat required to combust the flue gas stream and added air under stoichiometric conditions. The negative values indicate that an additional fuel source must be provided as the flue gas stream will not sustain combustion of itself. Additional information may be found in Appendix E.

III. PROCESS DESCRIPTION AND OPERATION

A. Process Description

Charcoal in Missouri is manufactured by means of the pyrolysis, or destructive distillation of wood, utilizing the kiln method.[2-4/] The wood is heated in generally air tight ovens using controlled amounts of air. Wood moisture, volatiles, and combustion gases are driven off by the high temperatures generated. Combustion of part of the wood volatiles produces heat to sustain the carbonization process. The waste gases are emitted to the atmosphere through the kiln stacks leaving a product of highly carbonized charcoal, along with some partially charred wood which may be used in subsequent kiln loadings. Approximately 4,000 lb (1,814 kg) of wood must be used to obtain 1,000 lb (454 kg) charcoal.

A typical Missouri-type kiln is shown in Figure 1. Wood is loaded through the door and the roof ventilation ports leaving some air space along the bottom of the kiln. The fire is usually started at the bottom center of the kiln using kindling or other easily combustible materials placed there during loading. During the start-up phase, the door

DRAFT

DRAFT

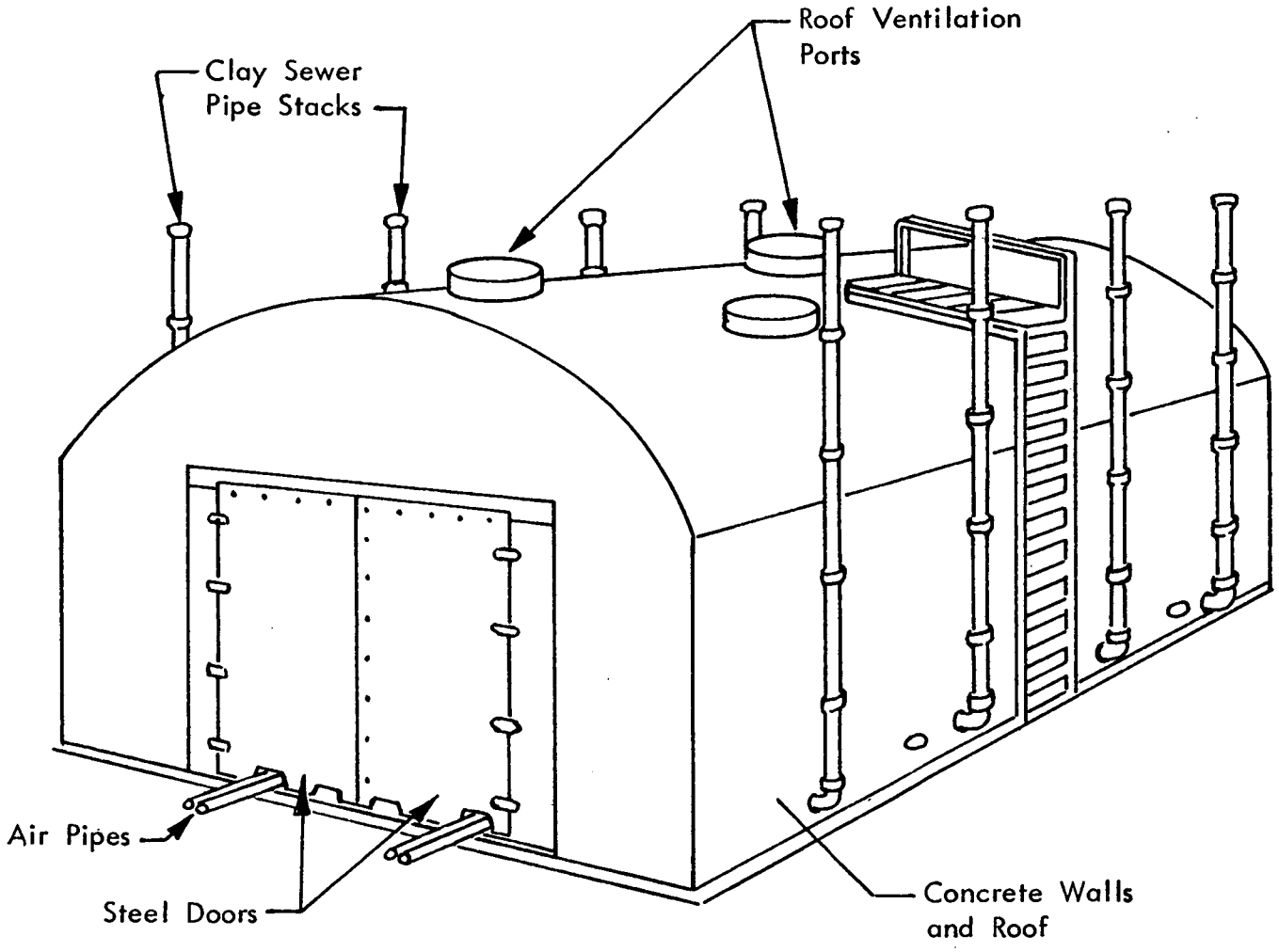

Figure 1 - The Missouri-Type Charcoal Kiln

DRAFT

DRAFT

and roof ventilation ports are left open. The ports are closed first after approximately 1 hr and then the doors are closed after 2 to 3 hr. Combustion air inflow is then provided through the use of air pipes near the floor and controlled to prevent complete ashing of the wood. Stack gas velocities are only slightly greater than natural convection and may cease altogether at times in any given stack, depending on the location of hot spots in the kiln, and wind direction and velocity. Generally, the burn is completed when the fire has reached the floor of the kiln, having burned from top to bottom and center to walls. At this time, all openings are sealed off, preventing further air inflow or waste gas emission, killing the fire, and allowing the kiln to cool.

Burn times vary with the type and size of kiln, operator experience and practice, the type of wood used, and the degree of carbonization or quality of product desired. A typical cycle may be within the time frames given below:

1-2 days to load;

5-8 days to burn;

10-14 days to cool; and

1-2 days to unload.

The kilns are generally of concrete construction and may have exposed walls or earthen embankments to provide insulation. Stacks may be constructed of many materials but are usually of 6 to 8 in. (15.2 to

DRAFT

DRAFT

20.3 cm) diameter clay sewer pipe with water pipe and galvanized stove pipe also being used. Stack heights may vary from kiln to kiln or among stacks of a given kiln. No emission control devices are known to be in operation in Missouri on Missouri-type kilns.

B. Process Operation

The kiln tested at the Wulff Charcoal Company, Vienna, Missouri, operates as a typical Missouri-type charcoal kiln. Drawings of the kiln are presented in Figure 2. The kiln has been in operation for 25 to 30 years. The wood utilized is generally white (post) oak, and may be either fresh cut cordwood, aged (dried) cordwood, or sawmill waste bark-edge slabwood. Prior to this test series, the kiln owner had several truck loads of the various wood types measured and weighed to obtain an average pounds per cubic foot (pcf) value for the wood used in this test kiln. This value is probably very representative as the wood is stacked as tightly in the kiln as it is on the truck. The average value obtained was 29.5 pcf (472.5 kg/cu m). Thus, this kiln has a capacity of approximately 191,300 lb (86,790 kg) or 50.5 cords of wood. Calculations relating to the kiln volume are found in Appendix F. Allowing for air space left around the walls and roof and provided on the floor, the usable wood volume would be approximately 45 cords (169,920 lb, 77,074 kg), which will be used as the capacity for this test. As most of the charcoal produced by Wulff Charcoal is used for industrial

DRAFT

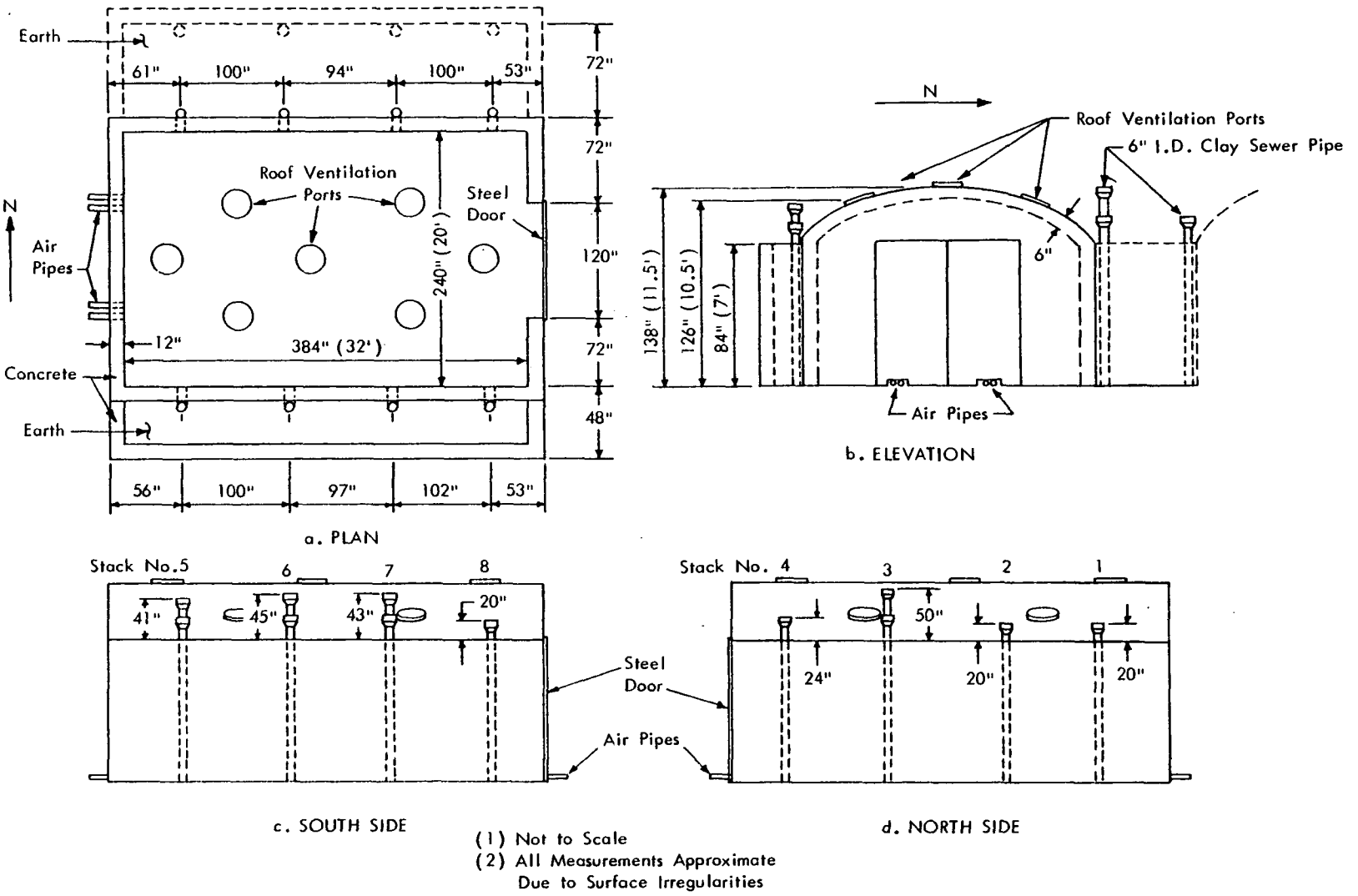

(1) Not to Scale
(2) All Measurements Approximate Due to Surface Irregularities

Figure 2 - Drawings of Sampled Kiln

DRAFT
DRAFT

DRAFT

purposes, they try to obtain a higher degree of carbonization than is normal. This also yields a lower amount of charcoal per cord of wood than is normal, only around 800 lb (363 kg) charcoal per cord. Thus, the charcoal production of the kiln for this test would be approximately 36,000 lb (16,330 kg).

The kiln was loaded and ready to be lit by noon, Tuesday, December 2, 1975. Figure 3 presents a comparison of the kiln burn cycle with the sampling test cycles. At first, the closed door was not completely sealed but gradually the kiln was sealed such that only the air pipes and exhaust stacks remained open. Close-down began on the afternoon of Monday, December 8, 1975, with the sealing of two exhaust stacks and was completed by approximately noon, Tuesday, December 9, 1975, yielding a 7-day burn cycle.

IV. SAMPLING AND ANALYTICAL PROCEDURES

A. Sampling

Due to the nature of the charcoal kiln itself and the types of materials emitted in the waste gas stream, in addition to the general lack of information relating to the testing of a kiln during operation, a portion of the task was to evolve a sampling train and technique that would handle the effluent constituents with reasonable case.

Various sampling techniques were examined for use on the project. One was to sample each emitting stack each day. This would yield up

DRAFT

DRAFT

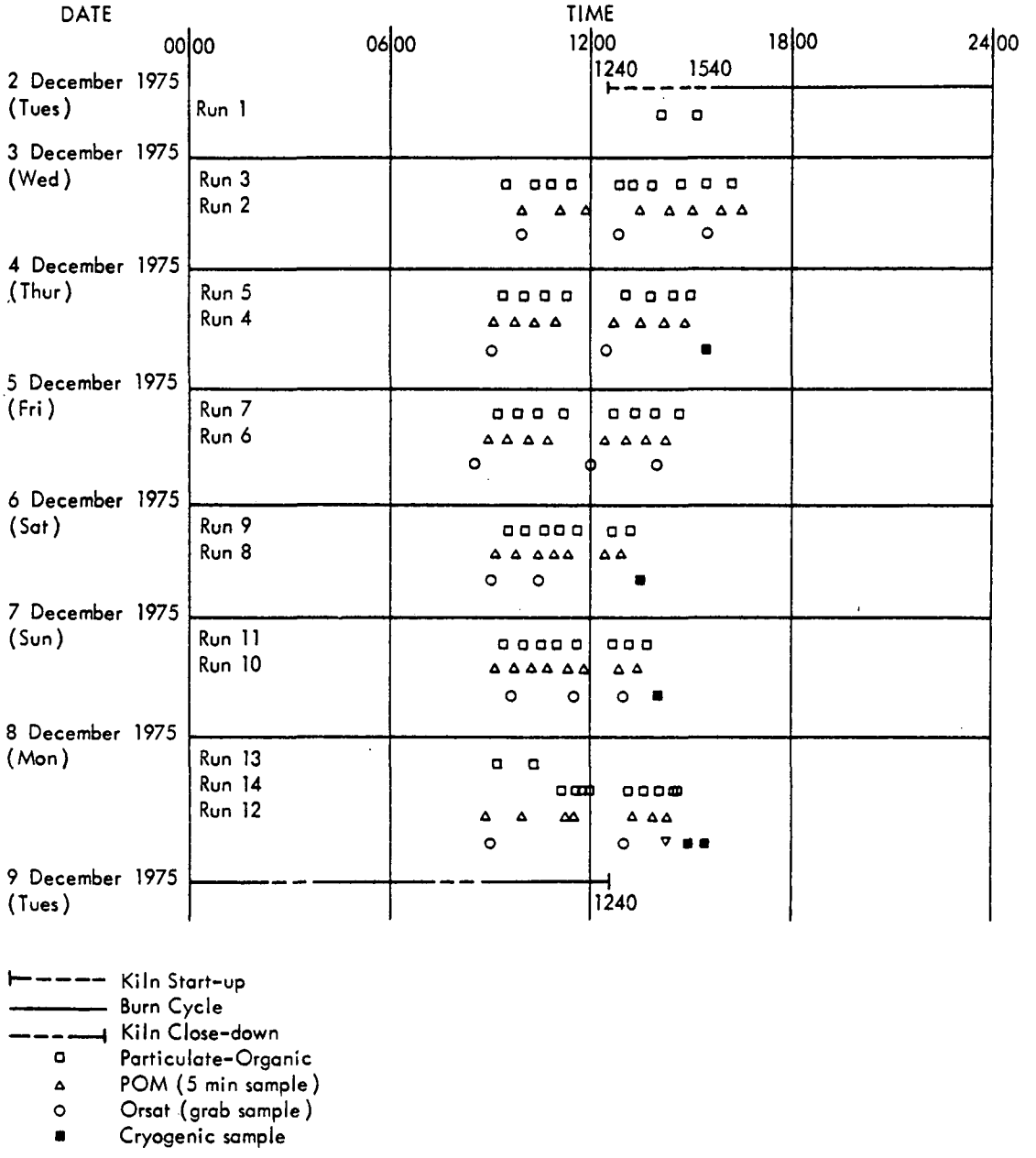

Figure 3 - Schedule of Burn and Testing Cycles

DRAFT

DRAFT

to eight samples per day. However, as the proper recovery of samples is time consuming, this method of sampling would not be practical for use during 1 day. Another technique would be to composite several stacks into one sample, yielding one to four samples per day. By compositing samples from all emitting stacks into one daily sample, a closer compromise between the task objectives and an amount of work that could reasonably be done in 1 day could be achieved. Thus, it was decided to sample each emitting stack once per day, compositing the samples together for one sample or run per day. Each stack would be sampled for the same amount of time on a given day.

In order to do the actual testing, basically two train configurations were considered. The first method would involve manifolding the stacks together and sampling the common duct. This method would involve considerable problems in material deposition in the manifold ducting and possible disruption of the normal operation of the kiln or the natural draft of the stacks. It was rejected in favor of the other method. By sampling each emitting stack in turn with the same sampling apparatus without sample cleanup between stacks, samples from the individual stacks would be automatically combined for a daily average. It was felt that by using this sampling method and by modifying the standard EPA Method 5 sampling train,[1/] a workable system would result.

DRAFT

DRAFT

1. Mass and total organics

a. Preliminary tests: As tars and oils, present in the waste gas stream, were predicted to plug a glass-fiber filter easily, the filter was moved from its normal position at the front of the train to the rear, just ahead of the silica gel (Figure 4). Also, as the presence of polycyclic organic matter (POM) in the effluent stream was being investigated, 2% sodium carbonate was substituted for distilled water in the first two impingers due to the greater solubility of POMs in sodium carbonate. No probe or filter heaters were used. As the stack gas flow rate was very low, glass tubing of approximately 0.5 in. (1.3 cm) ID was used as a probe and probe tip.

To check out this train and related sampling procedures, as well as the analytical techniques, a preliminary series of tests was conducted at a kiln operated by Noblett Charcoal, Belle, Missouri. Two 1/2-hr tests (Runs Nos. 1-P and 2-P) were run on one stack of the kiln during a burn cycle. The impingers were maintained in an ice water bath. Stack gas temperatures were obtained using a thermocouple and potentiometer while stack gas velocities were measured with a Type 3002-2G Alnor Velometer. The velocities were too low for accurate reading using the standard Type-S pitot tube. The velometer presents problems as it is susceptible to ambient wind and possible internal interference due to oil and tar entrained in the flue gas stream. Sampling was done at a constant,

DRAFT

DRAFT

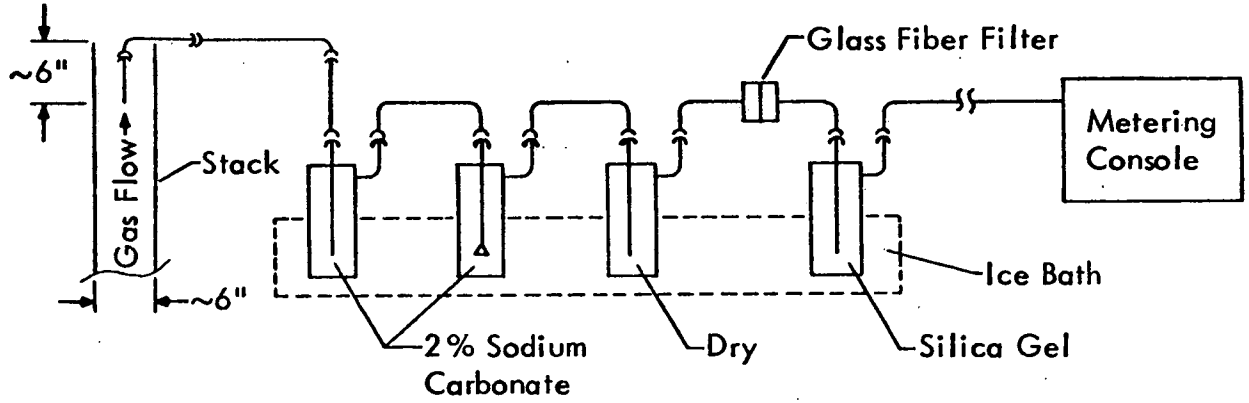

Figure 4 - Preliminary Sampling Train A: Run Nos. 1-P and 2-P

DRAFT

DRAFT

low flow rate of approximately 0.25 actual cubic feet per minute (0.007 actual cubic meters per minute). One flue gas determination by ORSAT analysis was conducted. Moisture determinations were made using the volume of collected water. The probe tip projected into the stack approximately 6 in. (15.3 cm) directly from the top. It was not practicable to establish ports in the stack and extensions were not used in order to disturb the stack draft characteristics as little as possible. Also, no traversing of the stack was done due to the large probe tip size with respect to the small stack size. No general problems were encountered during sampling with this train.

As difficulties arose in the analysis of the samples of the first preliminary series, a second preliminary series of testing was done at Wulff Charcoal, Vienna, Missouri. In this series, four train variations were examined, two for the mass and organic analysis and two for the POM analysis, to be examined later. For the mass-organic trains, the standard EPA Method 5 sampling train was used with the inclusion of a filter prior to the silica gel (Figures 5 and 6). The first test (Run No. 3-P) was done with both train filters at atmospheric temperature while the second test (Run No. 4-P) was run with the first train filter heated to approximately 350°F (177°C).

Due to the high moisture content of the flue gas (~ 30% by volume), a considerable amount of water was condensed onto the unheated first filter during Run No. 3-P, filling perhaps one-third the

DRAFT

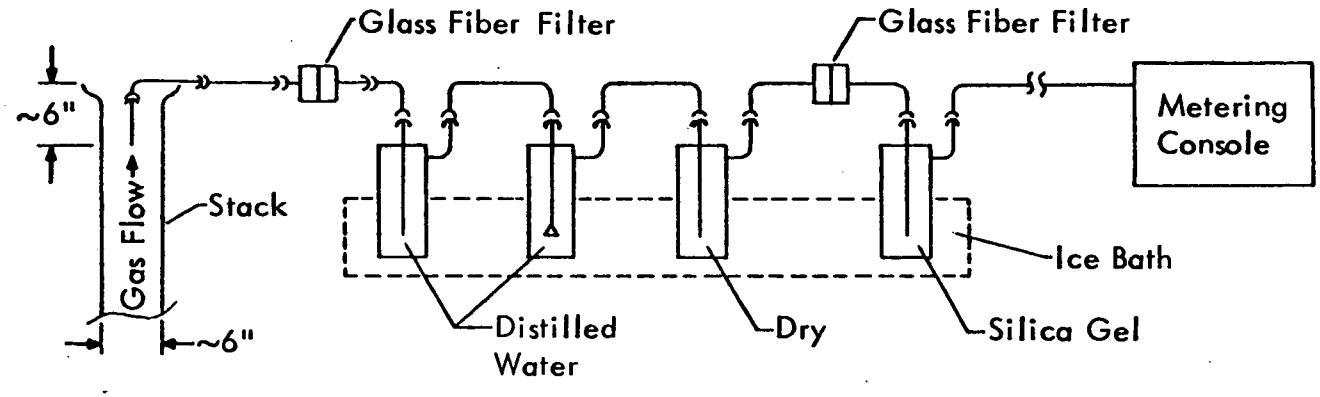

Figure 5 - Preliminary Sampling Train B: Run No. 3-P

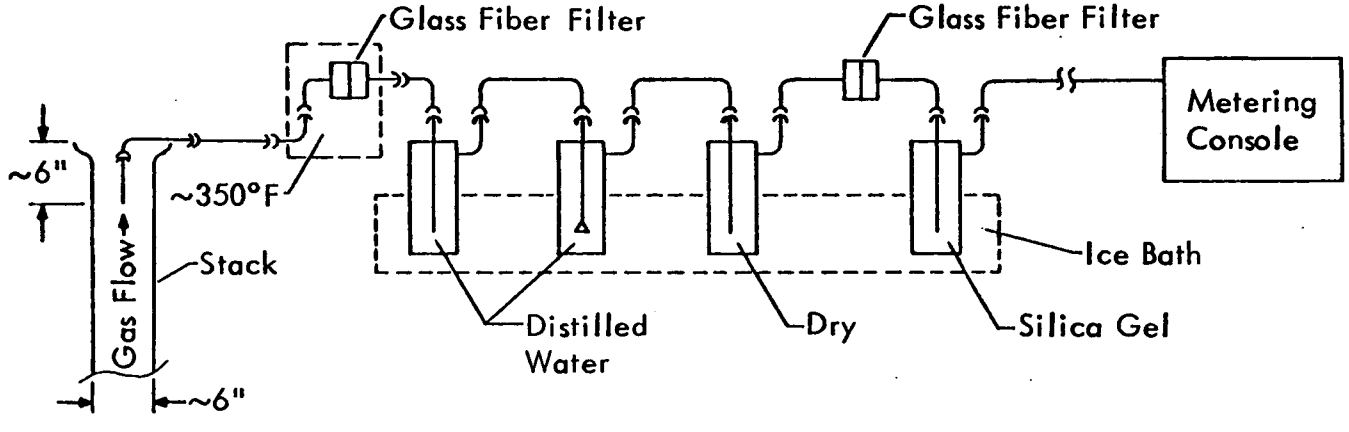

Figure 6 - Preliminary Sampling Train C: Run No. 4-P

DRAFT

DRAFT

DRAFT

volume of the filter holder. The second filter had no observable material on it after 30-min running time. It is believed that the wet first filter acted as scrubber or catalyst, removing more material than normal. The wet filter, however, is very difficult to handle.

Run No. 4-P was conducted to eliminate the wet first filter. During this run, the first filter remained dry and was much easier to handle. The second filter was yellow in color after 30-min running time. During both runs, the impinger solutions were cloudy indicating that not all of the flue gas material was captured on the filter and that water-soluble organics were present. Also, the filter support frit contained condensed tar and oil. In all cases, the silica gel was discolored, indicating a reaction with some substance passing through the train or the collection of additional condensates.

In order to most closely comply with the EPA Method 5 sampling train for particulates and organic matter, Train C (Figure 6) was chosen for use during the actual test series. This train also had the advantage of eliminating the wet first filter. The first filter was to be heated to 200 to 250°F (93.3 to 121.1°C).

Computer printouts of the field data for the preliminary runs are presented in Appendix G.

b. Test series: Particulate and organic samples were taken with Research Appliance Company Model 2243 "Stacksampler" equipment, modified by MRI. Stack gas temperature readings were taken by

DRAFT

DRAFT

thermocouple using a Thermo Electric Minimite Model 31101 potentiometer. Stack gas velocities were taken with the Alnor Velometer, Type 3002-2G.

No traversing of the stacks was done due to the small diameter of the pipes. As the stacks were made of clay sewer pipe, the cutting of ports was considered impractical and no extensions were added to the stacks in order not to disturb the natural flow characteristics. The probe tip was merely inserted down into the center of the stack approximately 6 in. (15.3 cm). After the preliminary tests, it was believed possible to approach an isokinetic sampling rate by working the EPA isokinetic equation backwards, so to speak, for the actual gas volume to be sampled for each 5-min sampling period. The equation used for this computation is presented in Appendix H.

Sampling times per stack were chosen in order to optimize maximum time and sample volume with minimum operation and cleanup problems. Sample times per stack were as follows:

Run No. 3	30 min
Run Nos. 5, 7	20 min
Run Nos. 9, 11, 13	15 min
Run No. 14	10 min

No direct attempt was made to hold to the general EPA guidelines of a 2-hr sample time and 60-dscf sample volume.[1/] Sample times were reduced generally when the number of first filter changes became excessive due

DRAFT

DRAFT

to filter plugging (excessive pressure drop) or when such changes were forecast for the following run.

Flue gas velocities were measured every 10 min for each run until Run No. 9, when they were measured once per stack. For each run, these velocities remained fairly constant for each stack, within the precision of the method of measurement. The metering console data and flue gas temperatures were recorded every 5 min throughout the test series. Periodic leak checks of the train were made in order to ensure leak-free operation. In addition, visual examination of the train was made during sampling on nearly every stack to ensure proper functioning.

The relationship between the run times and the burn cycle has been presented in Figure 3. Run No. 1 was made in an attempt to sample emissions during the start-up period. However, after sampling for 5 min on Stack 1, the draft became insufficient and no other stacks emitted until after the doors had been closed. Therefore, Run No. 1 was completed by sampling 25 min with the probe projecting into the plume being emitted out of the front door. A nominal duct diameter of 10 ft (3.048 m) was used in the calculations for Tables 1 through 5. Insufficient time remained on that day to begin a normal test series.

Standard operation was to intersperse the POM sampling with the particulate-organic sampling. This involved using both trains on a stack in succession before moving to the next stack. Except for the

DRAFT

DRAFT

first full day (December 3, Run No. 3), the POM run on a stack preceded the particulate-organic run.

The stacks were sampled in the order 1, 2, 4, 3, 5, 6, 7, 8 except during Runs Nos. 9, 11, 13, and 14. For Run No. 9, Stacks 1 and 2 were not emitting at the start of the test so sampling was begun on Stack 4. Subsequently, Stack 1 began emitting and was sampled last. Stack 2 never emitted and was not sampled. On Run No. 11, Stack 2 did not begin emitting until after the start of the test and so was sampled last. Run No. 13 was terminated during sampling on the second stack as a result of repeated first filter changes and a difficulty in maintaining an isokinetic sampling rate. During Run No. 14, Stacks 4 and 8 ceased emitting and were capped by kiln personnel, Stack 4 after being tested and Stack 8 prior to being tested. During Run No. 7, several stacks were emitting intermittently. This "puffing" was determined by continuously monitoring the stack temperature. No sampling was done during period of no emissions.

During Run No. 3, the train configuration was changed in that a cyclone and catch-bottle was inserted prior to the first filter to provide a reservoir for the collected water. Due to the high moisutre content of the gas stream (~ 30%), the volume of water condensed was such that even by heating the first filter box, all of the moisture could not be maintained in the vapor stage. The cyclone-bottle combination was provided in order to retain this moisture and not have it fill up the horizontal portions of the probe. During some runs, the collected water had

DRAFT

DRAFT

to be emptied to prevent overflow. This water was combined with the impinger catch.

Values for the percent moisture by volume of the gas stream were determined in the field by measurement of the volume of water condensate collected. Some of these values were subsequently found to be slightly in excess of the saturation value for the average stack temperature as read from a psycrometric chart. Therefore, the percent moisture values for use in the computer calculations for Runs Nos. 1, 11, 13, and 14 were determined by volume calculations while those of Runs Nos. 3, 5, 7, and 9 were determined from a psychrometric chart. The value for Run No. 1 is very low, probably due to mixing between the atmosphere and the plume emerging from the open kiln door.

Two or three grab samples of the stack gas were taken per day for ORSAT analysis of the stack gas composition. The values obtained were averaged for each days' runs.

No sampling was done on December 9, 1975, as all of the stacks were either partially or totally capped.

2. Polycyclic organic materials

a. Preliminary tests: After the first preliminary test series, described earlier, the polycyclic organic material (POM) train was modified by placing another filter in front of the sodium carbonate impingers (Figures 7 and 8). This was done in an attempt to clean up the

DRAFT

DRAFT

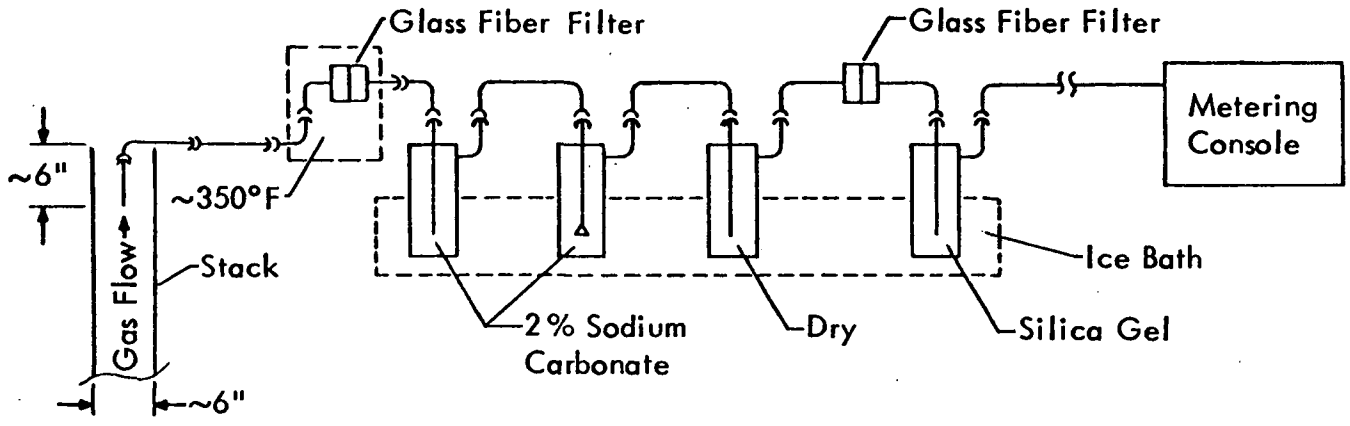

Figure 7 - Preliminary Sampling Train D: Run No. 5-P

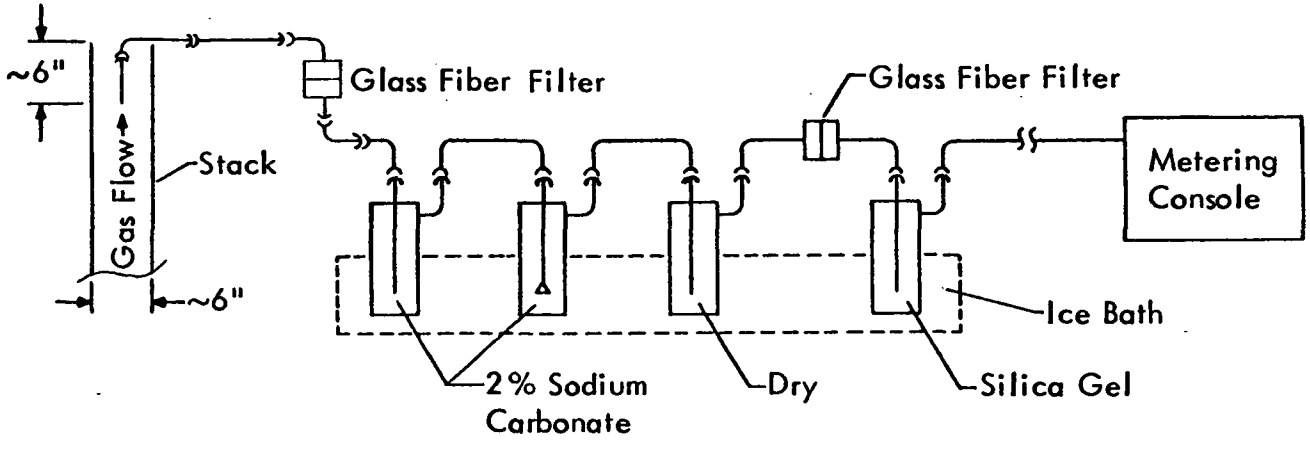

Figure 8 - Preliminary Sampling Train E: Run No. 6-P

DRAFT

DRAFT

impinger solutions for ease of analysis. The first test (Run No. 5-P) was done with the first filter heated to approximately 350°F (177°C), while the second test (Run No. 6-P) was run with both filters at ambient temperature.

During Run No. 5-P, the first filter remained dry. The second filter was yellow in color after 30 min running time. Run No. 6-P was conducted to see if condensed water would pass through a horizontal filter and frit easier than through a vertical assembly. This proved to be the case but the wet filter was still hard to handle. Again, all impinger solutions were cloudy and the filter support frit contained tar and oil.

For the actual test series, Train D (Figure 7) was chosen in order to maintain a dry first filter and to remove as much material as possible prior to the impinger solutions. The first filter was to be heated to 200 to 250°F (93.3 to 121.1°C).

Computer printouts of the field data for the preliminary runs are presented in Appendix G.

b. Test series: The same sampling equipment and techniques were used for the POM testing as for the particulate-organic testing. POM concentrations in the preliminary samples were found to be of sufficient magnitude to allow for a minimal sampling time during the test series in order to keep the impinger solutions as clean as possible.

DRAFT

DRAFT

Sampling times of 5 min/stack were used for all runs. First filters were replaced as necessary.

Flue gas velocities were measured prior to sampling each stack. The metering console data and flue gas temperatures were recorded every 5 min. Periodic leak checks and visual inspections of the train were made to ensure proper functioning.

The stacks were sampled in the same order as for the particulate-organic train with the same exceptions. For Run No. 8, Stacks 1 and 2 were not emitting at the start of the test, Stack 1 being sampled last and Stack 2 omitted due to lack of emissions. On Run No. 10, Stack 2 did not begin emitting until midway through the test and so was sampled last. During Run No. 12, Run No. 13 (particulate-organic) was terminated. Run No. 12 was held up until Run No. 14 had caught up in the number of stacks sampled. For Run No. 12, Stack 8 was not tested as it was sealed before it could be tested. During Run No. 6, several stacks emitted only intermittantly. This was detected by constant monitoring of the flue gas temperature and no sampling was done during period of "puffing."

No cyclone assembly had to be added to the train to catch condensed water vapor but moisture collected in the probe elbow prior to the first filter was periodically added to the contents of the first impinger. Percent moisture values were determined as for the particulate-organic train, those for Runs Nos. 10 and 11 calculated from volume computations while those for Runs Nos. 2, 4, 6, and 8 were obtained from a psychrometric chart.

DRAFT

DRAFT

3. Flammability limits and heat of combustion: Another portion of the sampling program was to determine if a flammability limit could be established. This is the amount of air that must be combined with the flue gas stream in order to sustain combustion, data useful in exploring control device possibilities for the kilns.

The apparatus used is shown in Figure 9. The chamber was filled with flue gas using the inlet blower. When this was accomplished, the inlet was directed towards ambient air and the spark or flame source was initiated. The flue gas in the chamber and the incoming ambient air were mixed using the inlet and outlet blowers. Three ignition methods were tried, two spark and one open flame.

Several tests were attempted during the preliminary tests and the actual test series. At no time could the flue gas be made to ignite. It is thought that the high moisture content of the stack gas stream may be responsible for this failure to ignite.

In an attempt to obtain some useful information relating to the combustion qualities of the stack gas, five cryogenic samples were taken during the actual test series in order to determine the heat of combustion of the condensed material. The sampling apparatus is shown in Figure 10. A 0.5-in. ID stainless steel "U"-tube was placed in a dry-ice-ethanol bath (-97.6°F, -72°C) and a sample was drawn at a very low flow rate using the RAC meter console until the trap was sealed with

DRAFT

DRAFT

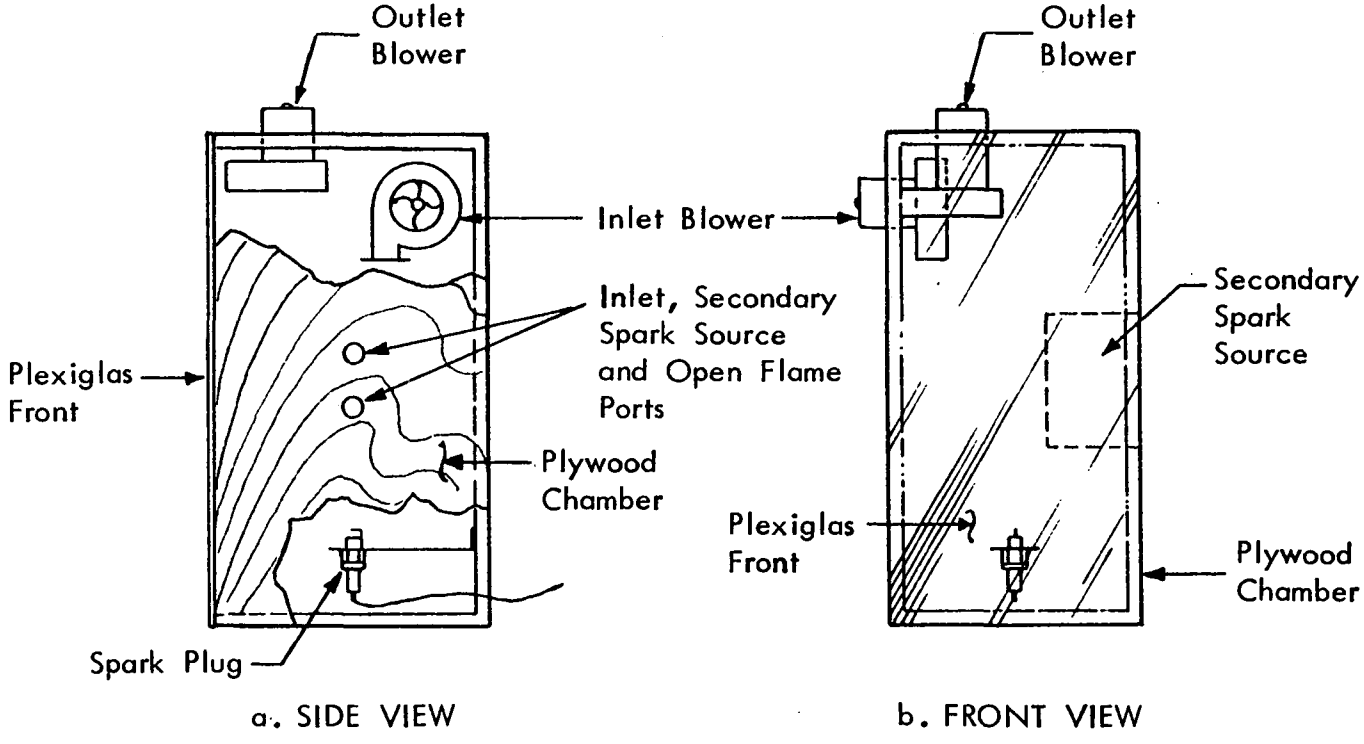

Figure 9 - Flammability Limits Apparatus

DRAFT

DRAFT

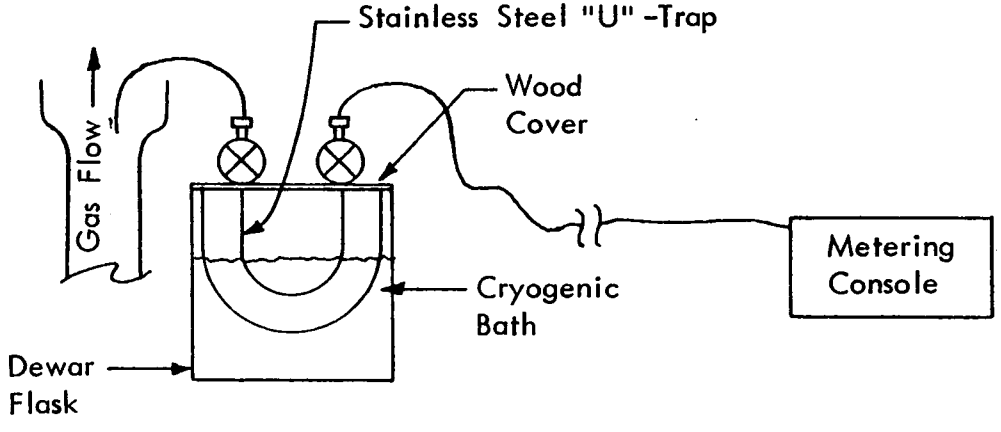

Figure 10 - Cryogenic Sampling Apparatus

DRAFT

DRAFT

condensed material. For the last two tests, a salt water-ice bath (14°F, -10°C) was substituted for the dry ice-ethanol bath. These samples were run for 15 min but were not cold enough to freeze.

B. Analysis

1. Mass and total organics: At the conclusion of each run, the samples were recovered at the sampling site. The filters were placed in clean, wide-mouth glass jars. All filters from a given position in the train, i.e., first or second, for each run were placed in the same jar. All glassware ahead of the first filter was washed with acetone into a clean, narrow-mouth glass bottle and sealed with a poly-seal cap. The impinger water was measured volumetrically and stored in a clean, narrow-mouth glass bottle with a poly-seal cap. The impingers, and all glassware behind the first filter, were then rinsed with acetone into a separate clean, narrow-mouth glass bottle having a poly-seal cap. The silica gel was weighed and discarded. The samples, after recovery, were transported to Kansas City by truck for analysis.

For the first set of preliminary runs, it was believed that the sodium carbonate solution could be utilized for both mass-organic and POM evaluations. However, it was discovered that the sodium carbonate was taken up by the ether-chloroform extraction process, resulting in a white, crystalline mass in the sample residue. Thus, the train configuration was changed for the other preliminary series and for the actual test series.

DRAFT

DRAFT

The mass samples were analyzed as specified in the referenced Federal Register.[1/] To obtain data for the total organics portion of the task, the filters were extracted ultrasonically using three 25-ml portions of chloroform followed by three 25-ml portions of ether. Each portion was decanted from the filter residue using disposable pipettes. The filter particles collected in the ether-chloroform extract were then centrifuged out and rinsed with ether and chloroform until no color was detected in the rinses. The combined ether-chloroform washings were evaporated in an ambient air hood, dessicated, and weighed. This result was compared with that of the total mass filter weight and the organic fraction was determined. This fraction was then applied to the acetone rinses to determine their organic fractions. The total organic load was obtained by summing all of the organic fractions with the result of the ether-chloroform extraction of the impinger water.

2. Polycyclic organic materials: The POM samples were recovered in the field in the same manner as the mass samples except that clean, brown-glass bottles with poly-seal caps were used for all solutions.

The sodium carbonate impinger solutions were extracted in a separatory funnel using three 100-ml portions of cyclohexane. The acetone rinses were evaporated to dryness using a stream of nitrogen gas. They were then extracted with cyclohexane, using 20-, 20-, and 5-ml portions.

DRAFT

DRAFT

The filters were extracted ultrasonically using cyclohexane, also using 20-, 20-, and 5-ml portions. The extractions were eluted on 20-gram columns of fluorisil eluted with 250 ml of 15% ether in hexane. The samples were analyzed using a Varian Model 1400 gas chromatograph with a scandium tritide electron capture detector. The 6 ft by 2 mm ID glass column was packed with 3% Dexil 300 GC on 100/120 Supelcoport. A nitrogen carrier gas flow rate of 30 ml/min was used. The temperatures utilized for the injection port, column, and detector were 255, 290 and 295°C, respectively.

3. Heat of combustion: The cryogenic samples were recovered after the return to Kansas City. The stainless steel U-traps were opened and the water fraction of each trap poured into a separate clean glass bottle and sealed with a poly-seal cap. The material remaining in each trap was then rinsed with acetone into separate clean glass bottles. The acetone rinses were evaporated to dryness at approximately 55°C, cooled to room temperature, and sealed with poly-seal caps. Both sets of samples were weighed and then sent to Kansas City Testing Laboratories for analysis. The heat of combustion results were obtained by Adiabatic Bomb Calorimeter. Filter paper pellets were used as a fuel source for both the water and the tar and oil fractions. The tar and oil fraction samples were transferred to the bomb cup via filter paper. A slight residue was observed in the bomb cup after each firing, indicating that the values may be on the low side.

DRAFT

DRAFT

V. RECOMMENDATIONS AND COMMENTS

1. The data presented in this report results from a single series of tests at a single kiln. It is not known how various woods would effect the emission characteristics. Other factors that could play a role are the meterological conditions and kiln operator techniques. Prior to any extensive setting of regulations regarding the charcoal kiln industry, other tests at other kilns should be considered to evaluate these other factors.

2. It is possible that more uniform mass data could be obtained by sampling with a train that does not employ the first filter, similar to the EPA sampling train for sulfuric acid mist.[1/] In this train, the flue gas stream is passed directly to the impingers before going to a final filter. This would eliminate the constant need for replacement of the first filter resulting from heavy loading and excessive pressure drop across the filter. Also, due to the nature of the flue gas stream, the amount of material that passes through the filter is somewhat dependent on the temperature at which the first filter is maintained in the sample box. Because of the variations in the precision of different sample box heaters, the amount of material collected on the first filter could vary from test to test, thus affecting the "front-half" emission calculations. By going to the impingers directly, the need to heat the probe or otherwise handle the condensed flue gas water vapor would be eliminated.

DRAFT

DRAFT

3. The low stack gas velocity inherent in charcoal kiln operation is difficult to measure by normal means. The velometer used in this test worked satisfactorily but as has been mentioned, is affected by ambient wind and possibly by the flue gas constituents. Other methods should be investigated to determine the most suitable.

4. Further work needs to be done to determine the combustion characteristics of the flue gas stream if control methods are envisioned for the charcoal industry. Enhanced combustion might be achieved by removing all or part of the water vapor from the flue gas stream. The possibility of using charcoal as the heat source for waste gas combustion might also be explored.

DRAFT

DRAFT

REFERENCES

1. Environmental Protection Agency, "Standards of Performance for New Stationary Sources," Federal Register, Vol. 36, No. 159, Part II, Tuesday, August 17, 1971.

2. Engineering Science, Inc., "Exhaust Gases from Combustion and Industrial Processes," Chapter IV-3, Environmental Protection Agency Contract No. EHSD 71-36, October 1971.

3. Jarvis, J. Pitts, Jr., "The Wood Charcoal Industry in the State of Missouri," Engineering Series Bulletin No. 48, Engineering Experiment Station, University of Missouri at Columbia, Vol. 61, No. 21, Columbia, Missouri, May 2, 1960.

4. Sverdrup & Parcel and Associates, Inc., "Air Pollution Control for Missouri Charcoal Kilns," prepared for the Missouri Air Conservation Commission, Jefferson City, Missouri, February 1971.

5. Hodgman, Charles D. (ed.), Handbook of Chemistry and Physics, 23rd Ed., Chemical Rubber Publishing Company, Cleveland, Ohio (1939).

6. Dean, John A. (ed.), Lange's Handbook of Chemistry, 11th Ed., McGraw-Hill Book Company, New York (1973).

DRAFT

DRAFT

APPENDIX A

RESULTS OF ANALYSIS - COMPUTER COMPUTATIONS (TOTAL PARTICULATE)

DRAFT

TABLE A-1

PARTICULATE DATA AND CALCULATED VALUES

RUN- 1 DATE- 12-02-75

ATMOS TEMP (DG.F)	ATMOS PRES (I.HG)	STACK VAC (I.H2O)	H2O COND (ML)	PARTIC WT-PTL (MG)	PARTIC WT-TTL (MG)	STACK AREA (FT2)	INIT VOL (DCF)	PERC O2 DRY	PERC CO2 DRY	PERC CO DRY	PITOT TUBE COEF
60.0	29.26	0.00	31.0	786.70	955.70		801.61	9.2	11.0	1.9	.850

PORT-POINT	SAMP TIME (MIN)	METER VOL (DCF)	DELTA P (I.H2O)	DELTA H (I.H2O)	TEMP IN (D.F)	TEMP OUT (D.F)	TRAIN VAC (I.HG)	STACK TEMP (D.F)	S.GEL TEMP (D.F)	PROBE T DIA (IN)	VEL (FPM)
1	5.00	802.84	.002	.150	62.0	62.0	1.0	62.0		.600	150.0
D	5.00	804.15	.008	.250	64.0	64.0	1.0	50.0		.600	300.0
D	5.00	806.04	.008	.400	67.0	64.0	2.0	50.0		.600	300.0
D	5.00	808.02	.008	.450	72.0	64.0	2.5	50.0		.600	300.0
D	5.00	810.29	.008	.550	80.0	68.0	4.0	50.0		.600	300.0
D	5.00	812.96	.008	.850	85.0	69.0	5.5	50.0		.600	300.0

DRAFT

DRAFT

TABLE A-2

PARTICULATE DATA AND CALCULATED VALUES

RUN- 3 DATE- 12-03-75

ATMOS TEMP (DG.F)	ATMOS PRES (I.HG)	STACK VAC (I.H2O)	H2O COND (ML)	PARTIC WT-PTL (MG)	PARTIC WT-TTL (MG)	STACK AREA (FT2)	INIT VOL (DCF)	PERC O2 DRY	PERC CO2 DRY	PERC CO DRY	PITOT TUBE COEF
40.0	29.31	0.00	675.2	2162.50	4855.10	.20	813.01	9.2	11.0	1.9	.850

PORT-	POINT	SAMP TIME (MIN)	METER VOL (DCF)	DELTA P (I.H2O)	DELTA H (I.H2O)	TEMP IN (D.F)	TEMP OUT (D.F)	TRAIN VAC (I.HG)	STACK TEMP (D.F)	S.GEL TEMP (D.F)	PROBE T DIA (IN)	VEL (FPM)
1	1	5.00	814.74	.006	.400	42.0	44.0	2.5	145.0		.600	300.0
1	1	5.00	816.47	.006	.350	46.0	44.0	2.5	140.0		.600	300.0
1	1	5.00	818.17	.006	.330	56.0	44.0	3.0	140.0	50.0	.600	300.0
1	1	5.00	819.87	.006	.350	59.0	45.0	4.0	140.0		.600	300.0
1	1	5.00	821.61	.006	.370	66.0	48.0	7.0	140.0	50.0	.600	300.0
1	1	5.00	823.47	.006	.400	69.0	49.0	7.5	140.0		.600	300.0
2	1	5.00	825.05	.006	.300	56.0	55.0	11.0	150.0	50.0	.600	300.0
2	1	5.00	826.78	.006	.400	61.0	56.0	14.0	150.0		.600	300.0
2	1	5.00	828.66	.006	.440	72.0	58.0	14.0	150.0		.600	300.0
2	1	5.00	830.53	.006	.400	64.0	59.0	4.0	145.0		.600	300.0
2	1	5.00	832.47	.006	.350	72.0	60.0	9.0	150.0		.600	300.0
2	1	5.00	834.18	.006	.350	74.0	61.0	9.0	150.0		.600	300.0
4	1	5.00	836.32	.009	.550	65.0	62.0	10.0	130.0		.600	350.0
4	1	5.00	838.47	.009	.530	71.0	63.0	6.5	130.0		.600	350.0
4	1	5.00	840.48	.007	.450	79.0	64.0	6.5	135.0		.600	320.0
4	1	5.00	842.42	.007	.400	80.0	65.0	6.5	135.0		.600	320.0
4	1	5.00	844.38	.009	.500	85.0	66.0	8.0	130.0	50.0	.600	350.0
4	1	5.00	846.64	.009	.550	87.0	68.0	9.0	135.0		.600	350.0

DRAFT

DRAFT

TABLE A-2 (Concluded)

RUN- 3 DATE- 12-03-75

PORT-	POINT	SAMP TIME (MIN)	METER VOL (DCF)	DELTA P (I.H2O)	DELTA H (I.H2O)	TEMP IN (D.F)	TEMP OUT (D.F)	TRAIN VAC (I.HG)	STACK TEMP (D.F)	S.GEL TEMP (D.F)	PROBE T DIA (IN)	VEL (FPM)
3	1	5.00	848.58	.006	.500	65.0	66.0	11.0	145.0		.600	300.0
3	1	5.00	850.39	.006	.400	70.0	66.0	11.0	145.0		.600	300.0
3	1	5.00	852.26	.008	.450	80.0	67.0	14.0	145.0	50.0	.600	350.0
3	1	5.00	854.17	.008	.400	83.0	68.0	15.0	145.0		.600	350.0
3	1	5.00	856.33	.009	.500	81.0	70.0	6.0	140.0		.600	350.0
3	1	5.00	858.82	.009	.700	87.0	72.0	6.0	140.0		.600	350.0
5	1	5.00	860.99	.011	.700	76.0	73.0	6.0	160.0		.600	400.0
5	1	5.00	863.59	.011	.750	82.0	74.0	7.5	165.0		.600	400.0
5	1	5.00	866.03	.008	.700	95.0	75.0	7.5	160.0		.600	350.0
5	1	5.00	868.03	.008	.600	94.0	76.0	8.0	160.0		.600	350.0
5	1	5.00	870.31	.014	.750	98.0	77.0	10.0	165.0		.600	450.0
5	1	5.00	872.79	.014	.700	100.0	78.0	14.0	165.0		.600	450.0
6	1	5.00	875.34	.011	.750	82.0	78.0	6.0	160.0		.600	400.0
6	1	5.00	878.03	.011	.800	89.0	79.0	7.0	160.0		.600	400.0
6	1	5.00	880.37	.006	.800	98.0	80.0	7.0	160.0		.600	300.0
6	1	5.00	882.08	.006	.550	98.0	80.0	7.0	160.0		.600	300.0
6	1	5.00	884.03	.008	.550	98.0	81.0	8.0	160.0	70.0	.600	350.0
6	1	5.00	886.24	.008	.650	100.0	82.0	10.0	160.0		.600	350.0
7	1	5.00	888.17	.006	.550	86.0	82.0	8.0	155.0		.600	300.0
7	1	5.00	889.99	.006	.450	90.0	82.0	8.0	150.0		.600	300.0
7	1	5.00	891.61	.005	.400	95.0	82.0	10.0	155.0	60.0	.600	280.0
7	1	5.00	893.37	.005	.400	97.0	83.0	11.0	155.0		.600	280.0
7	1	5.00	894.87	.004	.300	100.0	84.0	12.0	155.0		.600	250.0
7	1	5.00	896.38	.004	.300	98.0	84.0	13.0	155.0		.600	250.0
8	1	5.00	898.77	.011	.650	82.0	81.0	6.0	165.0		.600	400.0
8	1	5.00	901.12	.011	.650	87.0	82.0	6.5	165.0		.600	400.0
8	1	5.00	903.36	.008	.550	95.0	82.0	7.0	160.0		.600	350.0
8	1	5.00	905.49	.008	.550	96.0	82.0	7.0	160.0		.600	350.0
8	1	5.00	907.40	.007	.400	99.0	82.0	7.0	160.0	55.0	.600	320.0
8	1	5.00	909.35	.007	.400	99.0	82.0	7.0	160.0		.600	320.0

DRAFT

DRAFT

TABLE A-3

PARTICULATE DATA AND CALCULATED VALUES

RUN- 5 DATE- 12-04-75

ATMOS TEMP (DG.F)	ATMOS PRES (I.HG)	STACK VAC (I.H2O)	H2O COND (ML)	PARTIC WT-PTL (MG)	PARTIC WT-TTL (MG)	STACK AREA (FT2)	INIT VOL (DCF)	PERC O2 DRY	PERC CO2 DRY	PERC CO DRY	PITOT TUBE COEF
50.0	29.31	0.00	598.0	3178.70	9264.70	.20	909.35	7.3	15.0	2.9	.850

PORT-	POINT	SAMP TIME (MIN)	METER VOL (DCF)	DELTA P (I.H2O)	DELTA H (I.H2O)	TEMP IN (D.F)	TEMP OUT (D.F)	TRAIN VAC (I.HG)	STACK TEMP (D.F)	S.GEL TEMP (D.F)	PROBE T DIA (IN)	VEL (FPM)
1	1	5.00	911.14	.006	.450	54.0	56.0	5.0	155.0		.600	300.0
1	1	5.00	912.85	.006	.400	58.0	56.0	5.5	155.0		.600	300.0
1	1	5.00	914.55	.006	.400	66.0	56.0	5.5	155.0	55.0	.600	300.0
1	1	5.00	916.25	.006	.350	68.0	57.0	6.0	150.0		.600	300.0
2	1	5.00	918.28	.008	.550	66.0	62.0	8.0	150.0		.600	350.0
2	1	5.00	920.33	.008	.550	72.0	62.0	10.0	150.0		.600	350.0
2	1	5.00	922.34	.008	.500	83.0	65.0	10.5	145.0		.600	350.0
2	1	5.00	924.53	.008	.600	86.0	65.0	11.0	145.0		.600	350.0
4	1	5.00	926.59	.008	.550	75.0	70.0	11.0	155.0		.600	350.0
4	1	5.00	928.65	.008	.500	80.0	72.0	11.0	160.0		.600	350.0
4	1	5.00	930.73	.008	.500	90.0	74.0	12.0	160.0	65.0	.600	350.0
4	1	5.00	932.78	.008	.500	92.0	74.0	12.0	160.0		.600	350.0
3	1	5.00	934.63	.006	.400	79.0	76.0	5.0	155.0		.600	300.0
3	1	5.00	936.39	.006	.400	83.0	77.0	5.0	160.0		.600	300.0
3	1	5.00	938.42	.008	.500	90.0	78.0	6.0	160.0	65.0	.600	350.0
3	1	5.00	940.55	.008	.500	93.0	79.0	6.0	160.0		.600	350.0

DRAFT

DRAFT

TABLE A-3 (Concluded)

RUN- 5 DATE- 12-04-75

PORT-	POINT	SAMP TIME (MIN)	METER VOL (DCF)	DELTA P (I.H2O)	DELTA H (I.H2O)	TEMP IN (D.F)	TEMP OUT (D.F)	TRAIN VAC (I.HG)	STACK TEMP (D.F)	S.GEL TEMP (D.F)	PROBE T DIA (IN)	VEL (FPM)
5	1	5.00	942.89	.011	.700	73.0	65.0	6.0	160.0		.600	400.0
5	1	5.00	945.26	.011	.700	79.0	75.0	7.5	155.0		.600	400.0
5	1	5.00	947.63	.011	.650	91.0	76.0	9.0	160.0		.600	400.0
5	1	5.00	950.01	.011	.650	95.0	77.0	9.0	160.0		.600	400.0
6	1	5.00	952.39	.011	.700	83.0	80.0	10.0	160.0		.600	400.0
6	1	5.00	954.77	.011	.650	90.0	81.0	11.0	160.0		.600	400.0
6	1	5.00	957.19	.011	.700	100.0	83.0	11.5	165.0		.600	400.0
6	1	5.00	959.60	.011	.700	103.0	83.0	12.0	160.0		.600	400.0
7	1	5.00	961.40	.006	.500	86.0	84.0	5.0	165.0		.600	300.0
7	1	5.00	963.18	.006	.400	89.0	85.0	5.0	165.0		.600	300.0
7	1	5.00	964.95	.006	.350	95.0	86.0	5.5	165.0	65.0	.600	300.0
7	1	5.00	966.73	.006	.300	97.0	87.0	6.5	165.0		.600	300.0
8	1	5.00	969.13	.011	.650	90.0	86.0	10.0	165.0		.600	400.0
8	1	5.00	971.54	.011	.650	96.0	88.0	10.5	165.0		.600	400.0
8	1	5.00	973.93	.011	.650	104.0	88.0	11.5	160.0		.600	400.0
8	1	5.00	976.43	.011	.650	108.0	90.0	12.0	160.0		.600	400.0

DRAFT

DRAFT

TABLE A-4

PARTICULATE DATA AND CALCULATED VALUES

RUN- 7 DATE- 12-05-75

ATMOS TEMP (DG.F)	ATMOS PRES (I.HG)	STACK VAC (I.H2O)	H2O COND (ML)	PARTIC WT-PTL (MG)	PARTIC WT-TTL (MG)	STACK AREA (FT2)	INIT VOL (DCF)	PERC O2 DRY	PERC CO2 DRY	PERC CO DRY	PITOT TUBE COEF
50.0	29.25	0.00	624.7	10536.20	62150.60	.20	977.30	9.2	17.2	4.1	.850

PORT- POINT		SAMP TIME (MIN)	METER VOL (DCF)	DELTA P (I.H2O)	DELTA H (I.H2O)	TEMP IN (D.F)	TEMP OUT (D.F)	TRAIN VAC (I.HG)	STACK TEMP (D.F)	S.GEL TEMP (D.F)	PROBE T DIA (IN)	VEL (FPM)
1	1	5.00	978.81	.004	.300	64.0	66.0	4.0	155.0		.600	250.0
1	1	5.00	980.18	.004	.250	68.0	67.0	4.0	155.0		.600	250.0
1	1	5.00	981.61	.004	.250	72.0	67.0	4.0	150.0	60.0	.600	250.0
1	1	5.00	983.08	.004	.250	74.0	68.0	4.0	150.0		.600	250.0
2	1	5.00	984.80	.006	.350	72.0	70.0	5.0	155.0		.600	300.0
2	1	5.00	986.52	.006	.300	77.0	71.0	6.0	150.0		.600	300.0
2	1	5.00	988.47	.008	.400	85.0	73.0	8.0	150.0	65.0	.600	350.0
2	1	5.00	990.56	.008	.500	88.0	74.0	8.5	150.0		.600	350.0
4	1	5.00	992.31	.006	.350	78.0	76.0	10.0	165.0		.600	300.0
4	1	5.00	994.20	.006	.450	81.0	77.0	11.0	160.0		.600	300.0
4	1	5.00	995.95	.006	.400	90.0	78.0	12.0	165.0		.600	300.0
4	1	5.00	997.72	.006	.400	92.0	79.0	12.0	160.0		.600	300.0
3	1	5.00	999.19	.004	.300	80.0	80.0	4.0	160.0		.600	250.0
3	1	5.00	1000.66	.004	.250	82.0	80.0	5.0	160.0		.600	250.0
3	1	5.00	1002.10	.004	.250	88.0	81.0	5.0	160.0	60.0	.600	250.0
3	1	5.00	1003.49	.004	.250	90.0	82.0	6.0	160.0		.600	250.0

DRAFT

DRAFT

TABLE A-4 (Concluded)

RUN- 7 DATE- 12-05-75

PORT-	POINT	SAMP TIME (MIN)	METER VOL (DCF)	DELTA P (I.H2O)	DELTA H (I.H2O)	TEMP IN (D.F)	TEMP OUT (D.F)	TRAIN VAC (I.HG)	STACK TEMP (D.F)	S.GEL TEMP (D.F)	PROBE T DIA (IN)	VEL (FPM)
5	1	5.00	1005.43	.008	.450	70.0	74.0	9.0	160.0		.600	350.0
5	1	5.00	1007.39	.008	.450	74.0	74.0	10.0	165.0		.600	350.0
5	1	5.00	1009.53	.008	.550	84.0	74.0	11.0	165.0		.600	350.0
5	1	5.00	1011.61	.008	.550	87.0	75.0	11.0	170.0		.600	350.0
6	1	5.00	1013.61	.008	.550	77.0	77.0	5.0	170.0		.600	350.0
6	1	5.00	1015.64	.008	.500	83.0	78.0	9.0	165.0		.600	350.0
6	1	5.00	1017.64	.007	.450	92.0	79.0	10.0	160.0		.600	325.0
6	1	5.00	1019.41	.007	.350	94.0	80.0	9.0	165.0		.600	325.0
7	1	5.00	1021.70	.010	.700	84.0	80.0	12.0	185.0		.600	400.0
7	1	5.00	1023.97	.010	.700	92.0	82.0	12.0	185.0		.600	400.0
7	1	5.00	1026.25	.010	.650	98.0	83.0	12.0	190.0		.600	400.0
7	1	5.00	1028.50	.010	.650	103.0	84.0	12.5	185.0		.600	400.0
8	1	5.00	1029.96	.004	.400	80.0	80.0	5.0	180.0		.600	250.0
8	1	5.00	1031.42	.004	.400	81.0	81.0	9.0	175.0		.600	250.0
8	1	5.00	1032.96	.005	.300	86.0	82.0	9.0	175.0		.600	275.0
8	1	5.00	1034.54	.005	.300	89.0	81.0	9.0	175.0		.600	275.0

DRAFT

DRAFT

TABLE A-5

PARTICULATE DATA AND CALCULATED VALUES

RUN- 9 DATE- 12-06-75

ATMOS TEMP (DG.F)	ATMOS PRES (I.HG)	STACK VAC (I.H2O)	H2O COND (ML)	PARTIC WT-PTL (MG)	PARTIC WT-TTL (MG)	STACK AREA (FT2)	INIT VOL (DCF)	PERC O2 DRY	PERC CO2 DRY	PERC CO DRY	PITOT TUBE COEF
40.0	29.65	0.00	316.4	3719.50	8569.10	.20	34.54	6.4	16.1	1.5	.850

PORT-POINT		SAMP TIME (MIN)	METER VOL (DCF)	DELTA P (I.H2O)	DELTA H (I.H2O)	TEMP IN (D.F)	TEMP OUT (D.F)	TRAIN VAC (I.HG)	STACK TEMP (D.F)	S.GEL TEMP (D.F)	PROBE T DIA (IN)	VEL (FPM)
4	1	5.00	36.12	.006	.300	40.0	40.0	4.0	155.0		.600	300.0
4	1	5.00	37.68	.006	.350	43.0	41.0	5.0	160.0		.600	300.0
4	1	5.00	39.44	.006	.400	49.0	42.0	6.5	160.0		.600	300.0
3	1	5.00	41.12	.006	.400	48.0	45.0	8.0	145.0		.600	300.0
3	1	5.00	42.73	.006	.400	51.0	46.0	8.0	145.0		.600	300.0
3	1	5.00	44.51	.006	.400	57.0	47.0	9.0	145.0		.600	300.0
5	1	5.00	46.19	.006	.400	51.0	50.0	9.0	150.0		.600	300.0
5	1	5.00	47.87	.006	.400	55.0	50.0	9.5	155.0		.600	300.0
5	1	5.00	49.55	.006	.350	60.0	51.0	10.0	155.0		.600	300.0
6	1	5.00	50.96	.004	.250	54.0	52.0	10.0	150.0		.600	250.0
6	1	5.00	52.36	.004	.250	58.0	52.0	10.5	155.0		.600	250.0
6	1	5.00	53.76	.004	.250	60.0	53.0	11.0	155.0		.600	250.0

DRAFT

DRAFT

TABLE A-5 (Concluded)

RUN- 9 DATE- 12-06-75

PORT-	POINT	SAMP TIME (MIN)	METER VOL (DCF)	DELTA P (I.H2O)	DELTA H (I.H2O)	TEMP IN (D.F)	TEMP OUT (D.F)	TRAIN VAC (I.HG)	STACK TEMP (D.F)	S.GEL TEMP (D.F)	PROBE T DIA (IN)	VEL (FPM)
7	1	5.00	55.53	.006	.400	55.0	54.0	4.0	165.0		.600	300.0
7	1	5.00	57.10	.006	.350	59.0	55.0	5.0	165.0		.600	300.0
7	1	5.00	58.69	.006	.300	63.0	55.0	7.5	165.0		.600	300.0
8	1	5.00	60.44	.006	.400	54.0	55.0	13.0	165.0		.600	300.0
8	1	5.00	62.05	.006	.350	58.0	56.0	13.0	170.0		.600	300.0
8	1	5.00	63.70	.006	.350	63.0	56.0	12.0	170.0		.600	300.0
1	1	5.00	65.39	.006	.350	60.0	56.0	11.0	155.0		.600	300.0
1	1	5.00	67.09	.006	.350	64.0	56.0	12.5	155.0		.600	300.0
1	1	5.00	68.72	.006	.350	68.0	58.0	13.0	160.0		.600	300.0

DRAFT

DRAFT

TABLE A-6

PARTICULATE DATA AND CALCULATED VALUES

RUN- 11 DATE- 12-07-75

ATMOS TEMP (DG.F)	ATMOS PRES (I.HG)	STACK VAC (I.H2O)	H2O COND (ML)	PARTIC WT-PTL (MG)	PARTIC WT-TTL (MG)	STACK AREA (FT2)	INIT VOL (DCF)	PERC O2 DRY	PERC CO2 DRY	PERC CO DRY	PITOT TUBE COEF
40.0	29.65	0.00	370.0	6043.60	12969.50	.20	70.83	5.1	18.2	5.5	.850

PORT-	POINT	SAMP TIME (MIN)	METER VOL (DCF)	DELTA P (I.H2O)	DELTA H (I.H2O)	TEMP IN (D.F)	TEMP OUT (D.F)	TRAIN VAC (I.HG)	STACK TEMP (D.F)	S.GEL TEMP (D.F)	PROBE T DIA (IN)	VEL (FPM)
1	1	5.00	72.13	.004	.250	44.0	45.0	3.0	170.0		.600	250.0
1	1	5.00	73.50	.004	.250	47.0	45.0	4.0	170.0		.600	250.0
1	1	5.00	74.86	.004	.250	51.0	45.0	6.0	170.0		.600	250.0
4	1	5.00	76.66	.008	.400	48.0	46.0	9.0	200.0		.600	350.0
4	1	5.00	78.44	.008	.400	53.0	47.0	9.0	200.0		.600	350.0
4	1	5.00	80.25	.008	.400	59.0	47.0	9.5	205.0	56.0	.600	350.0
3	1	5.00	81.87	.006	.300	52.0	48.0	9.5	170.0		.600	300.0
3	1	5.00	83.43	.006	.300	58.0	49.0	11.0	160.0		.600	300.0
3	1	5.00	84.83	.006	.300	62.0	50.0	13.5	160.0		.600	300.0
5	1	5.00	86.49	.006	.350	52.0	50.0	3.0	170.0		.600	300.0
5	1	5.00	88.34	.006	.400	57.0	51.0	3.0	185.0	50.0	.600	300.0
5	1	5.00	90.09	.006	.400	63.0	51.0	4.0	190.0		.600	300.0
6	1	5.00	91.69	.006	.400	55.0	52.0	4.0	175.0		.600	300.0
6	1	5.00	93.32	.006	.350	59.0	53.0	4.0	180.0		.600	300.0
6	1	5.00	94.94	.006	.350	65.0	54.0	5.0	180.0		.600	300.0

DRAFT

DRAFT

TABLE A-6 (Concluded)

RUN- 11 DATE- 12-07-75

PORT-	POINT	SAMP TIME (MIN)	METER VOL (DCF)	DELTA P (I.H2O)	DELTA H (I.H2O)	TEMP IN (D.F)	TEMP OUT (D.F)	TRAIN VAC (I.HG)	STACK TEMP (D.F)	S.GEL TEMP (D.F)	PROBE T DIA (IN)	VEL (FPM)
7	1	5.00	96.57	.006	.350	53.0	54.0	5.0	185.0		.600	300.0
7	1	5.00	98.16	.006	.350	57.0	55.0	6.0	195.0	55.0	.600	300.0
7	1	5.00	99.72	.006	.300	61.0	55.0	6.0	190.0		.600	300.0
8	1	5.00	101.28	.006	.300	59.0	55.0	7.0	205.0		.600	300.0
8	1	5.00	102.85	.006	.300	62.0	56.0	8.0	205.0		.600	300.0
8	1	5.00	104.42	.006	.300	65.0	57.0	8.0	205.0		.600	300.0
2	1	5.00	105.74	.005	.250	60.0	58.0	7.0	335.0		.600	300.0
2	1	5.00	107.04	.005	.200	62.0	58.0	7.0	330.0	50.0	.600	300.0
2	1	5.00	108.36	.005	.200	66.0	58.0	8.0	330.0		.600	300.0

DRAFT

DRAFT

TABLE A-7

PARTICULATE DATA AND CALCULATED VALUES

RUN- 13 DATE- 12-08-75

ATMOS TEMP (DG.F)	ATMOS PRES (I.HG)	STACK VAC (I.H2O)	H2O COND (ML)	PARTIC WT-PTL (MG)	PARTIC WT-TTL (MG)	STACK AREA (FT2)	INIT VOL (DCF)	PERC O2 DRY	PERC CO2 DRY	PERC CO DRY	PITOT TUBE COEF
40.0	29.35	0.00	52.5	1577.80	2566.30	.20	111.14	1.1	22.3	6.7	.850

PORT- POINT		SAMP TIME (MIN)	METER VOL (DCF)	DELTA P (I.H2O)	DELTA H (I.H2O)	TEMP IN (D.F)	TEMP OUT (D.F)	TRAIN VAC (I.HG)	STACK TEMP (D.F)	S.GEL TEMP (D.F)	PROBE T DIA (IN)	VEL (FPM)
1	1	5.00	112.45	.005	.250	42.0	45.0	9.0	320.0		.600	300.0
1	1	5.00	113.52	.005	.200	45.0	45.0	14.0	325.0		.600	300.0
1	1	5.00	115.01	.005	.300	50.0	45.0	5.0	290.0		.600	300.0
2	1	5.00	116.04	.003	.100	42.0	44.0	10.0	320.0		.600	250.0
2	1	5.00	116.76	.003	.050	45.0	45.0	15.0	330.0		.600	250.0

DRAFT

DRAFT

TABLE A-8

PARTICULATE DATA AND CALCULATED VALUES

RUN- 14 DATE- 12-08-75

ATMOS TEMP (DG.F)	ATMOS PRES (I.HG)	STACK VAC (I.H2O)	H2O COND (ML)	PARTIC WT-PTL (MG)	PARTIC WT-TTL (MG)	STACK AREA (FT2)	INIT VOL (DCF)	PERC O2 DRY	PERC CO2 DRY	PERC CO DRY	PITOT TUBE COEF
40.0	29.35	0.00	176.0	6858.70	10048.90	.20	116.76	1.1	22.3	6.7	.850

PORT-	POINT	SAMP TIME (MIN)	METER VOL (DCF)	DELTA P (I.H2O)	DELTA H (I.H2O)	TEMP IN (D.F)	TEMP OUT (D.F)	TRAIN VAC (I.HG)	STACK TEMP (D.F)	S.GEL TEMP (D.F)	PROBE T DIA (IN)	VEL (FPM)
1	1	5.00	118.09	.005	.200	43.0	45.0	2.5	325.0	50.0	.600	300.0
1	1	5.00	119.36	.005	.200	46.0	46.0	5.0	320.0		.600	300.0
2	1	5.00	120.21	.002	.100	46.0	46.0	7.0	325.0		.600	200.0
2	1	5.00	120.98	.002	.100	47.0	47.0	12.0	330.0		.600	200.0
4	1	5.00	122.15	.003	.200	50.0	48.0	4.0	235.0		.600	220.0
4	1	5.00	123.22	.003	.200	53.0	48.0	10.0	245.0	50.0	.600	220.0
3	1	5.00	124.27	.003	.200	45.0	47.0	4.0	200.0		.600	200.0
3	1	5.00	125.27	.002	.150	47.0	47.0	11.0	215.0		.600	200.0
5	1	5.00	126.59	.006	.250	46.0	47.0	8.0	335.0		.600	340.0
5	1	5.00	127.71	.006	.150	48.0	47.0	8.0	335.0	50.0	.600	340.0
6	1	5.00	129.27	.004	.300	49.0	47.0	4.0	295.0		.600	280.0
6	1	5.00	130.65	.004	.300	54.0	48.0	9.0	325.0		.600	280.0
7	1	5.00	132.00	.004	.300	52.0	49.0	1.0	300.0		.600	280.0
7	1	5.00	133.17	.004	.250	55.0	50.0	2.0	325.0		.600	280.0

DRAFT

DRAFT

DRAFT

TABLE A-9

PARTICULATE EMISSION DATA

NAME	DESCRIPTION	UNITS	1	3	5
	DATE OF RUN		12-02-75	12-03-75	12-04-75
DN	PROBE TIP DIAMETER	IN	.600	.600	.600
TT	NET TIME OF RUN	MIN	30.0	240.0	160.0
PB	BAROMETRIC PRESSURE	IN.HG	29.26	29.31	29.31
PM	AVG ORIFICE PRES DROP	IN.H2O	.442	.506	.539
VM	VOL DRY GAS-METER COND	DCF	11.35	96.34	67.08
TM	AVG GAS METER TEMP	DEG.F	68.4	75.5	79.8
VMSTD	VOL DRY GAS-STD COND	DSCF	11.15	93.53	64.61
VW	TOTAL H2O COLLECTED	ML	31.0	675.2	598.0
VWV	VOL H2O VAPOR-STD COND	SCF	1.47	32.00	28.35
PMOS	PERCENT MOISTURE BY VOL		11.6	25.5	30.5
MD	MOLE FRACTION DRY GAS		.884	.745	.695
PCO2	PERCENT CO2 BY VOL, DRY		11.0	11.0	15.0
PO2	PERCENT O2 BY VOL, DRY		9.2	9.2	7.3
PCO	PERCENT CO BY VOL, DRY		1.9	1.9	2.9
PN2	PERCENT N2 BY VOL, DRY		77.9	77.9	74.8
MWD	MOLECULAR WT-DRY STK GAS		30.13	30.13	30.69
MW	MOLECULAR WT-STK GAS		28.72	27.04	26.82
CP	PITOT TUBE COEFFICIENT		.850	.850	.850
DPS	AVG STK VELOCITY HEAD	IN.H2O	.007	.008	.008
TS	AVG STACK TEMPERATURE	DEG.F	52.0	150.5	158.3
NP	NET SAMPLING POINTS		6	48	32
PST	STATIC PRES OF STACK	IN.HG	-0.00	-0.00	-0.00
PS	STACK PRESSURE, ABSOLUTE	IN.HG	29.26	29.31	29.31
VS	AVG STACK GAS VELOCITY	FPM	275	332	353
AS	STACK AREA	IN2	11,310 a/	29	29
QS	STK FLOWRATE, DRY,STD CN	DSCFM	19,326 a/	42	41
QA	ACTUAL STACK FLOWRATE	ACFM	21,601 a/	66	71
PERI	PERCENT ISOKINETIC		76.7	94.0	99.5
MF	PARTICULATE WT-PARTIAL	MG	786.70	2162.50	3178.70
MT	PARTICULATE WT-TOTAL	MG	955.70	4855.10	9264.70
IC	PERC IMPINGER CATCH		17.68	55.46	65.69
CAN	PART. LOAD-PTL,STD CN	GR/DSCF	1.08703	.35606	.75769
CAO	PART. LOAD-TTL,STD CN	GR/DSCF	1.32054	.79940	2.20837
CAT	PART. LOAD-PTL,STK CN	GR/ACF	.97224	.22560	.44224
CAU	PART. LOAD-TTL,STK CN	GR/ACF	1.18110	.50651	1.28895
CAW	PARTIC EMIS-PARTIAL	LB/HR	180	.13 b/	.27 b/
CAX	PARTIC EMIS-TOTAL	LB/HR	219	.29 b/	.78 b/
EA	PERCENT EXCESS AIR		67	67	42

a/ Nominal 10-ft (120 in.) diameter stack.

b/ Per stack; to obtain total for kiln, multiply by 8.

DRAFT

DRAFT

TABLE A-9 (Continued)

PARTICULATE EMISSION DATA

NAME	DESCRIPTION	UNITS	7	9	11
	DATE OF RUN		12-05-75	12-06-75	12-07-75
DN	PROBE TIP DIAMETER	IN	.600	.600	.600
TT	NET TIME OF RUN	MIN	160.0	105.0	120.0
PB	BAROMETRIC PRESSURE	IN.HG	29.25	29.65	29.65
PM	AVG ORIFICE PRES DROP	IN.H2O	.412	.350	.319
VM	VOL DRY GAS-METER COND	DCF	57.24	34.18	37.53
TM	AVG GAS METER TEMP	DEG.F	79.8	53.3	54.4
VMSTD	VOL DRY GAS-STD COND	DSCF	55.00	35.00	38.35
VW	TOTAL H2O COLLECTED	ML	624.7	316.4	370.0
VWV	VOL H2O VAPOR-STD COND	SCF	29.61	15.00	17.54
PMOS	PERCENT MOISTURE BY VOL		35.0	30.0	31.4
MD	MOLE FRACTION DRY GAS		.650	.700	.686
PCO2	PERCENT CO2 BY VOL, DRY		17.2	16.1	18.2
PO2	PERCENT O2 BY VOL, DRY		9.2	6.4	5.1
PCO	PERCENT CO BY VOL, DRY		4.1	1.5	5.5
PN2	PERCENT N2 BY VOL, DRY		69.5	76.0	71.2
MWD	MOLECULAR WT-DRY STK GAS		31.12	30.83	31.12
MW	MOLECULAR WT-STK GAS		26.53	26.98	27.00
CP	PITOT TUBE COEFFICIENT		.850	.850	.850
DPS	AVG STK VELOCITY HEAD	IN.H2O	.006	.006	.006
TS	AVG STACK TEMPERATURE	DEG.F	164.8	157.1	202.7
NP	NET SAMPLING POINTS		32	21	24
PST	STATIC PRES OF STACK	IN.HG	-0.00	-0.00	-0.00
PS	STACK PRESSURE, ABSOLUTE	IN.HG	29.25	29.65	29.65
VS	AVG STACK GAS VELOCITY	FPM	309	293	300
AS	STACK AREA	IN2	29	29	29
QS	STK FLOWRATE, DRY,STD CN	DSCFM	33	35	33
QA	ACTUAL STACK FLOWRATE	ACFM	62	59	60
PERI	PERCENT ISOKINETIC		104.6	97.0	99.4
MF	PARTICULATE WT-PARTIAL	MG	10536.20	3719.50	6043.60
MT	PARTICULATE WT-TOTAL	MG	62150.60	8569.10	12969.50
IC	PERC IMPINGER CATCH		83.05	56.59	53.40
CAN	PART. LOAD-PTL,STD CN	GR/DSCF	2.95024	1.63650	2.42671
CAO	PART. LOAD-TTL,STD CN	GR/DSCF	17.40280	3.77023	5.20770
CAT	PART. LOAD-PTL,STK CN	GR/ACF	1.59022	.97498	1.31975
CAU	PART. LOAD-TTL,STK CN	GR/ACF	9.38035	2.24620	2.83217
CAW	PARTIC EMIS-PARTIAL	LB/HR	.84a/	.49b/	.68a/
CAX	PARTIC EMIS-TOTAL	LB/HR	4.98a/	1.13b/	1.46a/
EA	PERCENT EXCESS AIR		64	39	14

a/ Per stack; to obtain total for kiln, multiply by 8.
b/ Per stack; to obtain total for kiln, multiply by 7.

DRAFT

DRAFT

TABLE A-9 (Concluded)

PARTICULATE EMISSION DATA

NAME	DESCRIPTION	UNITS	13	14
	DATE OF RUN		12-08-75	12-08-75
DN	PROBE TIP DIAMETER	IN	.600	.600
TT	NET TIME OF RUN	MIN	25.0	70.0
PB	BAROMETRIC PRESSURE	IN.HG	29.35	29.35
PM	AVG ORIFICE PRES DROP	IN.H2O	.180	.207
VM	VOL DRY GAS-METER COND	DCF	5.62	16.41
TM	AVG GAS METER TEMP	DEG.F	44.8	48.0
VMSTD	VOL DRY GAS-STD COND	DSCF	5.79	16.80
VW	TOTAL H2O COLLECTED	ML	52.5	176.0
VWV	VOL H2O VAPOR-STD COND	SCF	2.49	8.34
PMOS	PERCENT MOISTURE BY VOL		30.1	33.2
MD	MOLE FRACTION DRY GAS		.699	.668
PCO2	PERCENT CO2 BY VOL, DRY		22.3	22.3
PO2	PERCENT O2 BY VOL, DRY		1.1	1.1
PCO	PERCENT CO BY VOL, DRY		6.7	6.7
PN2	PERCENT N2 BY VOL, DRY		69.9	69.9
MWD	MOLECULAR WT-DRY STK GAS		31.61	31.61
MW	MOLECULAR WT-STK GAS		27.52	27.10
CP	PITOT TUBE COEFFICIENT		.850	.850
DPS	AVG STK VELOCITY HEAD	IN.H2O	.004	.004
TS	AVG STACK TEMPERATURE	DEG.F	317.0	293.6
NP	NET SAMPLING POINTS		5	14
PST	STATIC PRES OF STACK	IN.HG	-0.00	-0.00
PS	STACK PRESSURE, ABSOLUTE	IN.HG	29.35	29.35
VS	AVG STACK GAS VELOCITY	FPM	280	260
AS	STACK AREA	IN2	29	29
QS	STK FLOWRATE, DRY,STD CN	DSCFM	26	24
QA	ACTUAL STACK FLOWRATE	ACFM	56	52
PERI	PERCENT ISOKINETIC		89.7	101.7
MF	PARTICULATE WT-PARTIAL	MG	1577.80	6858.70
MT	PARTICULATE WT-TOTAL	MG	2566.30	10048.90
IC	PERC IMPINGER CATCH		38.52	31.75
CAN	PART. LOAD-PTL,STD CN	GR/DSCF	4.19602	6.28550
CAO	PART. LOAD-TTL,STD CN	GR/DSCF	6.82485	9.20908
CAT	PART. LOAD-PTL,STK CN	GR/ACF	1.96373	2.89786
CAU	PART. LOAD-TTL,STK CN	GR/ACF	3.19402	4.24575
CAW	PARTIC EMIS-PARTIAL	LB/HR	.94a/	1.29b/
CAX	PARTIC EMIS-TOTAL	LB/HR	1.53a/	1.89b/
EA	PERCENT EXCESS AIR		-11	-11

a/ Per stack; to obtain total multiply by 1.67.

b/ Per stack; to obtain total for kiln, multiply by 7.

DRAFT

DRAFT

TABLE A-10

PARTICULATE EMISSION DATA
(METRIC RESULTS)

NAME	DESCRIPTION	UNITS	1	3	5
	DATE OF RUN		12-02-75	12-03-75	12-04-75
DN	PROBE TIP DIAMETER	IN	.600	.600	.600
TT	NET TIME OF RUN	MIN	30.0	240.0	160.0
PB	BAROMETRIC PRESSURE	IN.HG	29.26	29.31	29.31
PM	AVG ORIFICE PRES DROP	IN.H2O	.442	.506	.539
VM	VOL DRY GAS-METER COND	DCF	11.35	96.34	67.08
TM	AVG GAS METER TEMP	DEG.F	68.4	75.5	79.8
VMSTM	VOL DRY GAS-STD COND	NCM	.32	2.65	1.83
VW	TOTAL H2O COLLECTED	ML	31.0	675.2	598.0
VWM	VOL H2O VAPOR-STD COND	NM3	.04	.91	.80
PMOS	PERCENT MOISTURE BY VOL		11.6	25.5	30.5
MD	MOLE FRACTION DRY GAS		.884	.745	.695
PCO2	PERCENT CO2 BY VOL, DRY		11.0	11.0	15.0
PO2	PERCENT O2 BY VOL, DRY		9.2	9.2	7.3
PCO	PERCENT CO BY VOL, DRY		1.9	1.9	2.9
PN2	PERCENT N2 BY VOL, DRY		77.9	77.9	74.8
MWD	MOLECULAR WT-DRY STK GAS		30.13	30.13	30.69
MW	MOLECULAR WT-STK GAS		28.72	27.04	26.82
CP	PITOT TUBE COEFFICIENT		.850	.850	.850
DPS	AVG STK VELOCITY HEAD	IN.H2O	.007	.008	.008
TSM	AVG STACK TEMPERATURE	DEG.C	11.1	65.8	70.1
NP	NET SAMPLING POINTS		6	48	32
PST	STATIC PRES OF STACK	IN.HG	-0.00	-0.00	-0.00
PS	STACK PRESSURE, ABSOLUTE	IN.HG	29.26	29.31	29.31
VSM	AVG STACK GAS VELOCITY	M/MIN	83.8	101.2	107.7
AS	STACK AREA	IN2	11,310[a]	29	29
QSM	STK FLOWRATE, DRY,STD CN	NM3/MIN	547[a]	1.2	1.2
QAM	ACTUAL STACK FLOWRATE	M3/MIN	612[a]	1.9	2.0
PERI	PERCENT ISOKINETIC		76.7	94.0	99.5
MF	PARTICULATE WT-PARTIAL	MG	786.70	2162.50	3178.70
MT	PARTICULATE WT-TOTAL	MG	955.70	4855.10	9264.70
IC	PERC IMPINGER CATCH		17.68	55.46	65.69
CANM	PART. LOAD-PTL,STD CN	MG/NM3	2487.49	814.79	1733.85
CAOM	PART. LOAD-TTL,STD CN	MG/NM3	3021.85	1829.31	5053.51
CATM	PART. LOAD-PTL,STK CN	MG/M3	2224.82	516.25	1011.99
CAUM	PART. LOAD-TTL,STK CN	MG/M3	2702.75	1159.06	2949.56
CAWM	PARTIC EMIS-PARTIAL	KG/HR	82	.058[b]	.121[b]
CAXM	PARTIC EMIS-TOTAL	KG/HR	99	.131[b]	.354[b]
EA	PERCENT EXCESS AIR		67	67	42

a/ Nominal 10-ft (120 in.) diameter stack.

b/ Per stack; to obtain total for kiln, multiply by 8.

DRAFT

DRAFT

TABLE A-10 (Continued)

PARTICULATE EMISSION DATA (METRIC RESULTS)

NAME	DESCRIPTION	UNITS	7	9	11
	DATE OF RUN		12-05-75	12-06-75	12-07-75
DN	PROBE TIP DIAMETER	IN	.600	.600	.600
TT	NET TIME OF RUN	MIN	160.0	105.0	120.0
PB	BAROMETRIC PRESSURE	IN.HG	29.25	29.65	29.65
PM	AVG ORIFICE PRES DROP	IN.H2O	.412	.350	.319
VM	VOL DRY GAS-METER COND	DCF	57.24	34.18	37.53
TM	AVG GAS METER TEMP	DEG.F	79.8	53.3	54.4
VMSTM	VOL DRY GAS-STD COND	NCM	1.56	.99	1.09
VW	TOTAL H2O COLLECTED	ML	624.7	316.4	370.0
VWM	VOL H2O VAPOR-STD COND	NM3	.84	.42	.50
PMOS	PERCENT MOISTURE BY VOL		35.0	30.0	31.4
MD	MOLE FRACTION DRY GAS		.650	.700	.686
PCO2	PERCENT CO2 BY VOL, DRY		17.2	16.1	18.2
PO2	PERCENT O2 BY VOL, DRY		9.2	6.4	5.1
PCO	PERCENT CO BY VOL, DRY		4.1	1.5	5.5
PN2	PERCENT N2 BY VOL, DRY		69.5	76.0	71.2
MWD	MOLECULAR WT-DRY STK GAS		31.12	30.83	31.12
MW	MOLECULAR WT-STK GAS		26.53	26.98	27.00
CP	PITOT TUBE COEFFICIENT		.850	.850	.850
DPS	AVG STK VELOCITY HEAD	IN.H2O	.006	.006	.006
TSM	AVG STACK TEMPERATURE	DEG.C	73.8	69.5	94.8
NP	NET SAMPLING POINTS		32	21	24
PST	STATIC PRES OF STACK	IN.HG	-0.00	-0.00	-0.00
PS	STACK PRESSURE, ABSOLUTE	IN.HG	29.25	29.65	29.65
VSM	AVG STACK GAS VELOCITY	M/MIN	94.3	89.3	91.5
AS	STACK AREA	IN2	29	29	29
QSM	STK FLOWRATE, DRY,STD CN	NM3/MIN	.9	1.0	.9
QAM	ACTUAL STACK FLOWRATE	M3/MIN	1.8	1.7	1.7
PERI	PERCENT ISOKINETIC		104.6	97.0	99.4
MF	PARTICULATE WT-PARTIAL	MG	10536.20	3719.50	6043.60
MT	PARTICULATE WT-TOTAL	MG	62150.60	8569.10	12969.50
IC	PERC IMPINGER CATCH		83.05	56.59	53.40
CANM	PART. LOAD-PTL,STD CN	MG/NM3	6751.16	3744.88	5553.14
CAOM	PART. LOAD-TTL,STD CN	MG/NM3	39823.53	8627.56	11916.98
CATM	PART. LOAD-PTL,STK CN	MG/M3	3638.97	2231.09	3020.04
CAUM	PART. LOAD-TTL,STK CN	MG/M3	21465.44	5140.06	6480.97
CAWM	PARTIC EMIS-PARTIAL	KG/HR	.383 a/	.222 b/	.308 a/
CAXM	PARTIC EMIS-TOTAL	KG/HR	2.257 a/	.512 b/	.661 a/
EA	PERCENT EXCESS AIR		64	39	14

a/ Per stack; to obtain total for kiln, multiply by 8.
b/ Per stack; to obtain total for kiln, multiply by 7.

DRAFT

DRAFT

TABLE A-10 (Concluded)

PARTICULATE EMISSION DATA
(METRIC RESULTS)

NAME	DESCRIPTION	UNITS	13	14
	DATE OF RUN		12-08-75	12-08-75
DN	PROBE TIP DIAMETER	IN	.600	.600
TT	NET TIME OF RUN	MIN	25.0	70.0
PB	BAROMETRIC PRESSURE	IN.HG	29.35	29.35
PM	AVG ORIFICE PRES DROP	IN.H2O	.180	.207
VM	VOL DRY GAS-METER COND	DCF	5.62	16.41
TM	AVG GAS METER TEMP	DEG.F	44.8	48.0
VMSTM	VOL DRY GAS-STD COND	NCM	.16	.48
VW	TOTAL H2O COLLECTED	ML	52.5	176.0
VWM	VOL H2O VAPOR-STD COND	NM3	.07	.24
PMOS	PERCENT MOISTURE BY VOL		30.1	33.2
MD	MOLE FRACTION DRY GAS		.699	.668
PCO2	PERCENT CO2 BY VOL, DRY		22.3	22.3
PO2	PERCENT O2 BY VOL, DRY		1.1	1.1
PCO	PERCENT CO BY VOL, DRY		6.7	6.7
PN2	PERCENT N2 BY VOL, DRY		69.9	69.9
MWD	MOLECULAR WT-DRY STK GAS		31.61	31.61
MW	MOLECULAR WT-STK GAS		27.52	27.10
CP	PITOT TUBE COEFFICIENT		.850	.850
DPS	AVG STK VELOCITY HEAD	IN.H2O	.004	.004
TSM	AVG STACK TEMPERATURE	DEG.C	158.3	145.3
NP	NET SAMPLING POINTS		5	14
PST	STATIC PRES OF STACK	IN.HG	-0.00	-0.00
PS	STACK PRESSURE, ABSOLUTE	IN.HG	29.35	29.35
VSM	AVG STACK GAS VELOCITY	M/MIN	85.4	79.3
AS	STACK AREA	IN2	29	29
QSM	STK FLOWRATE, DRY,STD CN	NM3/MIN	.7	.7
QAM	ACTUAL STACK FLOWRATE	M3/MIN	1.6	1.5
PERI	PERCENT ISOKINETIC		89.7	101.7
MF	PARTICULATE WT-PARTIAL	MG	1577.80	6858.70
MT	PARTICULATE WT-TOTAL	MG	2566.30	10048.90
IC	PERC IMPINGER CATCH		38.52	31.75
CANM	PART. LOAD-PTL,STD CN	MG/NM3	9601.92	14383.35
CAOM	PART. LOAD-TTL,STD CN	MG/NM3	15617.58	21073.51
CATM	PART. LOAD-PTL,STK CN	MG/M3	4493.69	6631.29
CAUM	PART. LOAD-TTL,STK CN	MG/M3	7309.01	9715.72
CAWM	PARTIC EMIS-PARTIAL	KG/HR	.428 a/	.586 b/
CAXM	PARTIC EMIS-TOTAL	KG/HR	.695 a/	.858 b/
EA	PERCENT EXCESS AIR		-11	-11

a/ Per stack; to obtain total, multiply by 1.67.

b/ Per stack; to obtain total for kiln, multiply by 7.

DRAFT

TABLE A-11

SUMMARY OF RESULTS (PARTICULATE)

NAME	DESCRIPTION	UNITS	1	3	5
	DATE OF RUN		12-02-75	12-03-75	12-04-75
VMSTD	VOL DRY GAS-STD COND	DSCF	11.15	93.53	64.61
PMOS	PERCENT MOISTURE BY VOL		11.6	25.5	30.5
TS	AVG STACK TEMPERATURE	DEG.F	52.0	150.5	158.3
QS	STK FLOWRATE, DRY,STD CN	DSCFM	11,310[a/]	42	41
QA	ACTUAL STACK FLOWRATE	ACFM	21,601[a/]	66	71
PERI	PERCENT ISOKINETIC		76.7	94.0	99.5
PARTICULATES -- PARTIAL CATCH					
MF	PARTICULATE WT-PARTIAL	MG	786.70	2162.50	3178.70
CAN	PART. LOAD-PTL,STD CN	GR/DSCF	1.08703	.35606	.75769
CAT	PART. LOAD-PTL,STK CN	GR/ACF	.97224	.22560	.44224
CAW	PARTIC EMIS-PARTIAL	LB/HR	180	.13[b/]	.27[b/]
PARTICULATES -- TOTAL CATCH					
MT	PARTICULATE WT-TOTAL	MG	955.70	4855.10	9264.70
CAO	PART. LOAD-TTL,STD CN	GR/DSCF	1.32054	.79940	2.20837
CAU	PART. LOAD-TTL,STK CN	GR/ACF	1.18110	.50651	1.28895
CAX	PARTIC EMIS-TOTAL	LB/HR	219	.29[b/]	.78[b/]
IC	PERC IMPINGER CATCH		17.68	55.46	65.69

a/ Based on nominal 10-ft (120 in.) diameter stack.

b/ Per stack; to obtain total for kiln, multiply by 8.

DRAFT

DRAFT

TABLE A-11 (Continued)

SUMMARY OF RESULTS (PARTICULATE)

NAME	DESCRIPTION	UNITS	7	9	11
	DATE OF RUN		12-05-75	12-06-75	12-07-75
VMSTD	VOL DRY GAS-STD COND	DSCF	55.00	35.00	38.35
PMOS	PERCENT MOISTURE BY VOL		35.0	30.0	31.4
TS	AVG STACK TEMPERATURE	DEG.F	164.8	157.1	202.7
QS	STK FLOWRATE, DRY,STD CN	DSCFM	33	35	33
QA	ACTUAL STACK FLOWRATE	ACFM	62	59	60
PERI	PERCENT ISOKINETIC		104.6	97.0	99.4
PARTICULATES -- PARTIAL CATCH					
MF	PARTICULATE WT-PARTIAL	MG	10536.20	3719.50	6043.60
CAN	PART. LOAD-PTL,STD CN	GR/DSCF	2.95024	1.63650	2.42671
CAT	PART. LOAD-PTL,STK CN	GR/ACF	1.59022	.97498	1.31975
CAW	PARTIC EMIS-PARTIAL	LB/HR	.84a/	.49b/	.68a/
PARTICULATES -- TOTAL CATCH					
MT	PARTICULATE WT-TOTAL	MG	62150.60	8569.10	12969.50
CAO	PART. LOAD-TTL,STD CN	GR/DSCF	17.40280	3.77023	5.20770
CAU	PART. LOAD-TTL,STK CN	GR/ACF	9.38035	2.24620	2.83217
CAX	PARTIC EMIS-TOTAL	LB/HR	4.98a/	1.13b/	1.46a/
IC	PERC IMPINGER CATCH		83.05	56.59	53.40

a/ Per stack; to obtain total for kiln, multiply by 8.
b/ Per stack; to obtain total for kiln, multiply by 7.

DRAFT

DRAFT

TABLE A-11 (Concluded)

SUMMARY OF RESULTS (PARTICULATE)

NAME	DESCRIPTION	UNITS	13	14
	DATE OF RUN		12-08-75	12-08-75
VMSTD	VOL DRY GAS-STD COND	DSCF	5.79	16.80
PMOS	PERCENT MOISTURE BY VOL		30.1	33.2
TS	AVG STACK TEMPERATURE	DEG.F	317.0	293.6
QS	STK FLOWRATE, DRY,STD CN	DSCFM	26	24
QA	ACTUAL STACK FLOWRATE	ACFM	56	52
PERI	PERCENT ISOKINETIC		89.7	101.7
PARTICULATES -- PARTIAL CATCH				
MF	PARTICULATE WT-PARTIAL	MG	1577.80	6858.70
CAN	PART. LOAD-PTL,STD CN	GR/DSCF	4.19602	6.28550
CAT	PART. LOAD-PTL,STK CN	GR/ACF	1.96373	2.89786
CAW	PARTIC EMIS-PARTIAL	LB/HR	.94 a/	1.29 b/
PARTICULATES -- TOTAL CATCH				
MT	PARTICULATE WT-TOTAL	MG	2566.30	10048.90
CAO	PART. LOAD-TTL,STD CN	GR/DSCF	6.82485	9.20908
CAU	PART. LOAD-TTL,STK CN	GR/ACF	3.19402	4.24575
CAX	PARTIC EMIS-TOTAL	LB/HR	1.53 a/	1.89 b/
IC	PERC IMPINGER CATCH		38.52	31.75

a/ Per stack; to obtain total, multiply by 1.67.

b/ Per stack; to obtain total for kiln, multiply by 7.

DRAFT

DRAFT

TABLE A-12

SUMMARY OF RESULTS--METRIC UNITS (PARTICULATE)

NAME	DESCRIPTION	UNITS	1	3	5
	DATE OF RUN		12-02-75	12-03-75	12-04-75
VMSTM	VOL DRY GAS-STD COND	NCM	.316	2.649	1.829
PMOS	PERCENT MOISTURE BY VOL		11.6	25.5	30.5
TSM	AVG STACK TEMPERATURE	DEG.C	11.1	65.8	70.1
QSM	STK FLOWRATE, DRY,STD CN	NM3/MIN	547[a/]	1.2	1.2
QAM	ACTUAL STACK FLOWRATE	M3/MIN	612[a/]	1.9	2.0
PERI	PERCENT ISOKINETIC		76.7	94.0	99.5
EA	PERCENT EXCESS AIR		67	67	42
PARTICULATES -- PARTIAL CATCH					
MF	PARTICULATE WT-PARTIAL	MG	786.70	2162.50	3170.70
CANM	PART. LOAD-PTL,STD CN	MG/NM3	2487.49	814.79	1733.85
CATM	PART. LOAD-PTL,STK CN	MG/M3	2224.82	516.25	1011.99
CAWM	PARTIC EMIS-PARTIAL	KG/HR	82	.058[b/]	.121[b/]
PARTICULATES -- TOTAL CATCH					
MT	PARTICULATE WT-TOTAL	MG	955.70	4855.10	9264.70
CAOM	PART. LOAD-TTL,STD CN	MG/NM3	3021.85	1829.31	5053.51
CAUM	PART. LOAD-TTL,STK CN	MG/M3	2702.75	1159.06	2949.56
CAXM	PARTIC EMIS-TOTAL	KG/HR	99	.131[b/]	.354[b/]
IC	PERC IMPINGER CATCH		17.68	55.46	65.69

a/ Nominal 10-ft (120 in.) diameter stack.

b/ Per stack; to obtain total for kiln, multiply by 8.

DRAFT

DRAFT

TABLE A-12 (Continued)

SUMMARY OF RESULTS--METRIC UNITS (PARTICULATE)

NAME	DESCRIPTION	UNITS	7	9	11
	DATE OF RUN		12-05-75	12-06-75	12-07-75
VMSTM	VOL DRY GAS-STD COND	NCM	1.557	.991	1.086
PMOS	PERCENT MOISTURE BY VOL		35.0	30.0	31.4
TSM	AVG STACK TEMPERATURE	DEG.C	73.8	69.5	94.8
QSM	STK FLOWRATE, DRY,STD CN	NM3/MIN	.9	1.0	.9
QAM	ACTUAL STACK FLOWRATE	M3/MIN	1.8	1.7	1.7
PERI	PERCENT ISOKINETIC		104.6	97.0	99.4
EA	PERCENT EXCESS AIR		64	39	14
PARTICULATES -- PARTIAL CATCH					
MF	PARTICULATE WT-PARTIAL	MG	10536.20	3719.50	6043.60
CANM	PART. LOAD-PTL,STD CN	MG/NM3	6751.16	3744.88	5553.14
CATM	PART. LOAD-PTL,STK CN	MG/M3	3638.97	2231.09	3020.04
CAWM	PARTIC EMIS-PARTIAL	KG/HR	.383a/	.222b/	.308a/
PARTICULATES -- TOTAL CATCH					
MT	PARTICULATE WT-TOTAL	MG	62150.60	8569.10	12969.50
CAOM	PART. LOAD-TTL,STD CN	MG/NM3	39823.53	8627.56	11916.98
CAUM	PART. LOAD-TTL,STK CN	MG/M3	21465.44	5140.06	6480.97
CAXM	PARTIC EMIS-TOTAL	KG/HR	2.257a/	.512b/	.661a/
IC	PERC IMPINGER CATCH		83.05	56.59	53.40

a/ Per stack; to obtain total for kiln, multiply by 8.
b/ Per stack; to obtain total for kiln, multiply by 7.

DRAFT

DRAFT

TABLE A-12 (Concluded)

SUMMARY OF RESULTS--METRIC UNITS (PARTICULATE)

NAME	DESCRIPTION	UNITS	13	14
	DATE OF RUN		12-08-75	12-08-75
VMSTM	VOL DRY GAS-STD COND	NCM	.164	.476
PMOS	PERCENT MOISTURE BY VOL		30.1	33.2
TSM	AVG STACK TEMPERATURE	DEG.C	158.3	145.3
QSM	STK FLOWRATE, DRY,STD CN	NM3/MIN	.7	.7
QAM	ACTUAL STACK FLOWRATE	M3/MIN	1.6	1.5
PERI	PERCENT ISOKINETIC		89.7	101.7
EA	PERCENT EXCESS AIR		-11	-11
PARTICULATES -- PARTIAL CATCH				
MF	PARTICULATE WT-PARTIAL	MG	1577.80	6858.70
CANM	PART. LOAD-PTL,STD CN	MG/NM3	9601.92	14383.35
CATM	PART. LOAD-PTL,STK CN	MG/M3	4493.69	6631.29
CAWM	PARTIC EMIS-PARTIAL	KG/HR	.428 a/	.586 b/
PARTICULATES -- TOTAL CATCH				
MT	PARTICULATE WT-TOTAL	MG	2566.30	10048.90
CAOM	PART. LOAD-TTL,STD CN	MG/NM3	15617.58	21073.51
CAUM	PART. LOAD-TTL,STK CN	MG/M3	7309.01	9715.72
CAXM	PARTIC EMIS-TOTAL	KG/HR	.695 a/	.858 b/
IC	PERC IMPINGER CATCH		38.52	31.75

a/ Per stack; to obtain total, multiply by 1.67.

b/ Per stack; to obtain total for kiln, multiply by 7.

DRAFT

DRAFT

DRAFT

APPENDIX B

SAMPLE CALCULATIONS

DRAFT

EXAMPLE PARTICULATE CALCULATIONS

1. VOLUME OF DRY GAS SAMPLED AT STANDARD CONDITIONS (1)

$$VMSTD = \frac{17.71*VM*(PB + PM/13.6)}{TM+460.}$$

$$= \frac{17.71*\ 57.24*(29.25+\ \ .412/13.6)}{79.8+460.} = 55.00 \text{ DSCF}$$

$$VMSTM = VMSTD*0.028317 = 55.00*0.028317 = 1.56 \text{ DNM3}$$

2. VOLUME OF WATER VAPOR AT STANDARD CONDITIONS

$$VWV = 0.0474*VW = 0.0474*\ 624.7 = 29.61 \text{ SCF}$$

$$VWM = VWV*0.028317 = 29.611*0.028317 = .8385 \text{ NM3}$$

3. PERCENT MOISTURE IN STACK GAS

$$PMOS = \frac{100.*VWV}{VMSTD+VWV} = \frac{100.*\ 29.61}{55.00+\ 29.61} = 35.0 \text{ PERCENT}$$

DRAFT

DRAFT

4. MOLE FRACTION OF DRY STACK GAS

$$MD = \frac{100.-PMOS}{100.} = \frac{100.-\ 35.0}{100.} = .650$$

5. AVERAGE MOLECULAR WEIGHT OF DRY STACK GAS

$$MWD = (PCO2 * 44/100) + (PO2 * 32/100) + (PN2+PCO * 28/100)$$

$$= (17.2 * 44/100) + (9.2 * 32/100) + (73.6 * 28/100) = 31.12$$

6. MOLECULAR WEIGHT OF STACK GAS

$$MW = MWD*MD + 18*(1-MD)$$

$$= 31.1*.650 + 18*(1-.650) = 26.53$$

DRAFT

DRAFT

7. STACK GAS VELOCITY AT STACK CONDITIONS

```
VS    =  5129*CP*ASQRT(DPS*(TS+460))*
             SQRT(1/(PS*MW))

      =  5129*  .850 *  1.977
            *SQRT(1/(29.25*   26.53))     =        309 FPM

VSM   =  VS*0.3048  =      309*0.3048     =         94 METERS/MIN
```

8. STACK GAS VOLUMETRIC FLOW AT STANDARD CONDITIONS, DRY BASIS (1)

```
                0.123*VS*AS*MD*PS
QS    =  --------------------
                  TS+460

                0.123*   309*    29* .650*29.25
      =  ---------------------------------
                      164.8 +460
                                              =         33 DSCFM

QSM   =  QS*0.028317 =      33*0.028317       =          1 NM3/MIN
```

9. STACK GAS VOLUMETRIC FLOW AT STACK CONDITIONS

```
                QS * (TS+460)
QA    =  -----------------
                17.71 * PS * MD

                     33*( 164.8+460)
      =  ----------------------                =         62 ACFM
                17.71*29.25* .650

QAM   =  QA*0.028317 =      62*0.028317       =          2 NM3/MIN
```

DRAFT

DRAFT

10. PERCENT ISOKINETIC

$$PERI = \frac{1032*(TS+460)*VMSTD}{VS*TT*PS*MD*(DN*DN)}$$

$$= \frac{1032*(164.8+460)*55.00}{309*160.0*29.25*.650*.600*.600} = 104.6 \text{ PERCENT}$$

11. PARTICULATE LOADING -- PROBE, CYCLONE, AND FILTER
(AT STANDARD CONDITIONS)

CAN = 0.0154 * (MF/VMSTD)

= 0.0154*(7996.00/ 55.00) = 2.23896 GR/DSCF

CANM = CAN*2288.34 = 2.23896*2288.34 = 5123.51 MG/NM3

12. PARTICULATE LOADING -- TOTAL
(AT STANDARD CONDITIONS) (1)

CAO = 0.0154 * (MT/VMSTD)

= 0.0154*(*040.40/ 55.00) = 13.45180 GR/DSCF

CAOM = CAO*2288.34 = 13.45180*2288.34 = 30782.30 MG/NM3

DRAFT
DRAFT

13. PARTICULATE LOADING -- PROBE, CYCLONE, AND FILTER
(AT STACK CONDITIONS)

$$CAT = \frac{17.71*CAN*PS*MD}{TS+460}$$

$$= \frac{17.71*2.2390*29.25*.650}{164.8+460} = 1.20683 \text{ GR/ACF}$$

CATM = CAT*2288.34 = 1.20683*2288.34 = 2761.64 MG/M3

14. PARTICULATE LOADING -- TOTAL
(AT STACK CONDITIONS)

$$CAU = \frac{17.71*CAO*PS*MD}{TS+460}$$

$$= \frac{17.71*13.4518*29.25*.650}{164.8+460} = 7.25071 \text{ GR/ACF}$$

CAUM = CAU*2288.34 = 7.25071*2288.34 = 16592.09 MG/M3

15. PARTICULATE EMISSION RATE
-- PROBE, CYCLONE, AND FILTER

CAW = 0.00857*CAN*QS

= 0.00857* 2.2390* 33 = .64 LB/HR

CAWM = CAW*0.45359 = .64*0.45359 = .29 KG/HR

DRAFT
DRAFT

16. PARTICULATE EMISSION RATE
-- TOTAL

CAX = 0.00857*CAO*QS

= 0.00857* 13.4518* 33 = 3.85 LB/HR

CAXM = CAX*0.45359 = 3.85*0.45359 = 1.74 KG/HR

17. PERCENT EXCESS AIR AT SAMPLING POINT

$$EA = \frac{100. * (PO2-0.5*PCO)}{0.264*PN2-PO2+0.5*PCO}$$

$$= \frac{100. *(9.2-0.5* 4.1)}{0.264*69.5- 9.2+0.5* 4.1} = 63.9 \text{ PERCENT}$$

---

(1) STANDARD CONDITIONS- AT 70 DEG F (21.1 DEG C), 29.92 IN HG (760 MM HG)

DRAFT

DRAFT

DRAFT

APPENDIX C

RESULTS OF ANALYSIS - COMPUTER COMPUTATIONS
(TOTAL ORGANIC)

DRAFT

TABLE C-1

ORGANIC DATA AND CALCULATED VALUES

RUN- 1 DATE- 12-02-75

ATMOS TEMP (DG.F)	ATMOS PRES (I.HG)	STACK VAC (I.H2O)	H2O COND (ML)	PARTIC WT-PTL (MG)	PARTIC WT-TTL (MG)	STACK AREA (FT2)	INIT VOL (DCF)	PERC O2 DRY	PERC CO2 DRY	PERC CO DRY	PITOT TUBE COEF
60.0	29.26	0.00	31.0	554.90	646.70		801.61	9.2	11.0	1.9	.850

PORT-POINT	SAMP TIME (MIN)	METER VOL (DCF)	DELTA P (I.H2O)	DELTA H (I.H2O)	TEMP IN (D.F)	TEMP OUT (D.F)	TRAIN VAC (I.HG)	STACK TEMP (D.F)	S.GEL TEMP (D.F)	PROBE T DIA (IN)	VEL (FPM)
1	5.00	802.84	.002	.150	62.0	62.0	1.0	62.0		.600	150.0
D	5.00	804.15	.008	.250	64.0	64.0	1.0	50.0		.600	300.0
D	5.00	806.04	.008	.400	67.0	64.0	2.0	50.0		.600	300.0
D	5.00	808.02	.008	.450	72.0	64.0	2.5	50.0		.600	300.0
D	5.00	810.29	.008	.550	80.0	68.0	4.0	50.0		.600	300.0
D	5.00	812.96	.008	.850	85.0	69.0	5.5	50.0		.600	300.0

DRAFT

DRAFT

TABLE C-2

ORGANIC DATA AND CALCULATED VALUES

RUN- 3 DATE- 12-03-75

ATMOS TEMP (DG.F)	ATMOS PRES (I.HG)	STACK VAC (I.H2O)	H2O COND (ML)	PARTIC WT-PTL (MG)	PARTIC WT-TTL (MG)	STACK AREA (FT2)	INIT VOL (DCF)	PERC O2 DRY	PERC CO2 DRY	PERC CO DRY	PITOT TUBE COEF
40.0	29.31	0.00	675.2	1574.60	3367.30	.20	813.01	9.2	11.0	1.9	.850

PORT-	POINT	SAMP TIME (MIN)	METER VOL (DCF)	DELTA P (I.H2O)	DELTA H (I.H2O)	TEMP IN (D.F)	TEMP OUT (D.F)	TRAIN VAC (I.HG)	STACK TEMP (D.F)	S.GEL TEMP (D.F)	PROBE T DIA (IN)	VEL (FPM)
1	1	5.00	814.74	.006	.400	42.0	44.0	2.5	145.0		.600	300.0
1	1	5.00	816.47	.006	.350	46.0	44.0	2.5	140.0		.600	300.0
1	1	5.00	818.17	.006	.330	56.0	44.0	3.0	140.0	50.0	.600	300.0
1	1	5.00	819.87	.006	.350	59.0	45.0	4.0	140.0		.600	300.0
1	1	5.00	821.61	.006	.370	66.0	48.0	7.0	140.0	50.0	.600	300.0
1	1	5.00	823.47	.006	.400	69.0	49.0	7.5	140.0		.600	300.0
2	1	5.00	825.05	.006	.300	56.0	55.0	11.0	150.0	50.0	.600	300.0
2	1	5.00	826.78	.006	.400	61.0	56.0	14.0	150.0		.600	300.0
2	1	5.00	828.66	.006	.440	72.0	58.0	14.0	150.0		.600	300.0
2	1	5.00	830.53	.006	.400	64.0	59.0	4.0	145.0		.600	300.0
2	1	5.00	832.47	.006	.350	72.0	60.0	9.0	150.0		.600	300.0
2	1	5.00	834.18	.006	.350	74.0	61.0	9.0	150.0		.600	300.0
4	1	5.00	836.32	.009	.550	65.0	62.0	10.0	130.0		.600	350.0
4	1	5.00	838.47	.009	.530	71.0	63.0	6.5	130.0		.600	350.0
4	1	5.00	840.48	.007	.450	79.0	64.0	6.5	135.0		.600	320.0

DRAFT

DRAFT

TABLE C-2 (Continued)

RUN- 3 DATE- 12-03-75

PORT-POINT		SAMP TIME (MIN)	METER VOL (DCF)	DELTA P (I.H2O)	DELTA H (I.H2O)	TEMP IN (D.F)	TEMP OUT (D.F)	TRAIN VAC (I.HG)	STACK TEMP (D.F)	S.GEL TEMP (D.F)	PROBE T DIA (IN)	VEL (FPM)
4	1	5.00	842.42	.007	.400	80.0	65.0	6.5	135.0		.600	320.0
4	1	5.00	844.38	.009	.500	85.0	66.0	8.0	130.0	50.0	.600	350.0
4	1	5.00	846.64	.009	.550	87.0	68.0	9.0	135.0		.600	350.0
3	1	5.00	848.58	.006	.500	65.0	66.0	11.0	145.0		.600	300.0
3	1	5.00	850.39	.006	.400	70.0	66.0	11.0	145.0		.600	300.0
3	1	5.00	852.26	.008	.450	80.0	67.0	14.0	145.0	50.0	.600	350.0
3	1	5.00	854.17	.008	.400	83.0	68.0	15.0	145.0		.600	350.0
3	1	5.00	856.33	.009	.500	81.0	70.0	6.0	140.0		.600	350.0
3	1	5.00	858.82	.009	.700	87.0	72.0	6.0	140.0		.600	350.0
5	1	5.00	860.99	.011	.700	76.0	73.0	6.0	160.0		.600	400.0
5	1	5.00	863.59	.011	.750	82.0	74.0	7.5	165.0		.600	400.0
5	1	5.00	866.03	.008	.700	95.0	75.0	7.5	160.0		.600	350.0
5	1	5.00	868.03	.008	.600	94.0	76.0	8.0	160.0		.600	350.0
5	1	5.00	870.31	.014	.750	98.0	77.0	10.0	165.0		.600	450.0
5	1	5.00	872.79	.014	.700	100.0	78.0	14.0	165.0		.600	450.0
6	1	5.00	875.34	.011	.750	82.0	78.0	6.0	160.0		.600	400.0
6	1	5.00	878.03	.011	.800	89.0	79.0	7.0	160.0		.600	400.0
6	1	5.00	880.37	.006	.800	98.0	80.0	7.0	160.0		.600	300.0
6	1	5.00	882.08	.006	.550	98.0	80.0	7.0	160.0		.600	300.0
6	1	5.00	884.03	.008	.550	98.0	81.0	8.0	160.0	70.0	.600	350.0
6	1	5.00	886.24	.008	.650	100.0	82.0	10.0	160.0		.600	350.0
7	1	5.00	888.17	.006	.550	86.0	82.0	8.0	155.0		.600	300.0
7	1	5.00	889.99	.006	.450	90.0	82.0	8.0	150.0		.600	300.0
7	1	5.00	891.61	.005	.400	95.0	82.0	10.0	155.0	60.0	.600	280.0

DRAFT

DRAFT

TABLE C-2 (Concluded)

RUN- 3 DATE- 12-03-75

PORT-	POINT	SAMP TIME (MIN)	METER VOL (DCF)	DELTA P (I.H2O)	DELTA H (I.H2O)	TEMP IN (D.F)	TEMP OUT (D.F)	TRAIN VAC (I.HG)	STACK TEMP (D.F)	S.GEL TEMP (D.F)	PROBE T DIA (IN)	VEL (FPM)
7	1	5.00	893.37	.005	.400	97.0	83.0	11.0	155.0		.600	280.0
7	1	5.00	894.87	.004	.300	100.0	84.0	12.0	155.0		.600	250.0
7	1	5.00	896.38	.004	.300	98.0	84.0	13.0	155.0		.600	250.0
8	1	5.00	898.77	.011	.650	82.0	81.0	6.0	165.0		.600	400.0
8	1	5.00	901.12	.011	.650	87.0	82.0	6.5	165.0		.600	400.0
8	1	5.00	903.36	.008	.550	95.0	82.0	7.0	160.0		.600	350.0
8	1	5.00	905.49	.008	.550	96.0	82.0	7.0	160.0		.600	350.0
8	1	5.00	907.40	.007	.400	99.0	82.0	7.0	160.0	55.0	.600	320.0
8	1	5.00	909.35	.007	.400	99.0	82.0	7.0	160.0		.600	320.0

DRAFT

DRAFT

TABLE C-3

ORGANIC DATA AND CALCULATED VALUES

RUN- 5 DATE- 12-04-75

ATMOS TEMP (DG.F)	ATMOS PRES (I.HG)	STACK VAC (I.H2O)	H2O COND (ML)	PARTIC WT-PTL (MG)	PARTIC WT-TTL (MG)	STACK AREA (FT2)	INIT VOL (DCF)	PERC O2 DRY	PERC CO2 DRY	PERC CO DRY	PITOT TUBE COEF
50.0	29.31	0.00	598.0	2515.50	6815.40	.20	909.35	7.3	15.0	2.9	.850

PORT-	POINT	SAMP TIME (MIN)	METER VOL (DCF)	DELTA P (I.H2O)	DELTA H (I.H2O)	TEMP IN (D.F)	TEMP OUT (D.F)	TRAIN VAC (I.HG)	STACK TEMP (D.F)	S.GEL TEMP (D.F)	PROBE T DIA (IN)	VEL (FPM)
1	1	5.00	911.14	.006	.450	54.0	56.0	5.0	155.0		.600	300.0
1	1	5.00	912.85	.006	.400	58.0	56.0	5.5	155.0		.600	300.0
1	1	5.00	914.55	.006	.400	66.0	56.0	5.5	155.0	55.0	.600	300.0
1	1	5.00	916.25	.006	.350	68.0	57.0	6.0	150.0		.600	300.0
2	1	5.00	918.28	.008	.550	66.0	62.0	8.0	150.0		.600	350.0
2	1	5.00	920.33	.008	.550	72.0	62.0	10.0	150.0		.600	350.0
2	1	5.00	922.34	.008	.500	83.0	65.0	10.5	145.0		.600	350.0
2	1	5.00	924.53	.008	.600	86.0	65.0	11.0	145.0		.600	350.0
4	1	5.00	926.59	.008	.550	75.0	70.0	11.0	155.0		.600	350.0
4	1	5.00	928.65	.008	.500	80.0	72.0	11.0	160.0		.600	350.0
4	1	5.00	930.73	.008	.500	90.0	74.0	12.0	160.0	65.0	.600	350.0
4	1	5.00	932.78	.008	.500	92.0	74.0	12.0	160.0		.600	350.0
3	1	5.00	934.63	.006	.400	79.0	76.0	5.0	155.0		.600	300.0
3	1	5.00	936.39	.006	.400	83.0	77.0	5.0	160.0		.600	300.0
3	1	5.00	938.42	.008	.500	90.0	78.0	6.0	160.0	65.0	.600	350.0
3	1	5.00	940.55	.008	.500	93.0	79.0	6.0	160.0		.600	350.0

DRAFT

DRAFT

TABLE C-3 (Concluded)

RUN- 5 DATE- 12-04-75

PORT-POINT		SAMP TIME (MIN)	METER VOL (DCF)	DELTA P (I.H2O)	DELTA H (I.H2O)	TEMP IN (D.F)	TEMP OUT (D.F)	TRAIN VAC (I.HG)	STACK TEMP (D.F)	S.GEL TEMP (D.F)	PROBE T DIA (IN)	VEL (FPM)
5	1	5.00	942.89	.011	.700	73.0	65.0	6.0	160.0		.600	400.0
5	1	5.00	945.26	.011	.700	79.0	75.0	7.5	155.0		.600	400.0
5	1	5.00	947.63	.011	.650	91.0	76.0	9.0	160.0		.600	400.0
5	1	5.00	950.01	.011	.650	95.0	77.0	9.0	160.0		.600	400.0
6	1	5.00	952.39	.011	.700	83.0	80.0	10.0	160.0		.600	400.0
6	1	5.00	954.77	.011	.650	90.0	81.0	11.0	160.0		.600	400.0
6	1	5.00	957.19	.011	.700	100.0	83.0	11.5	165.0		.600	400.0
6	1	5.00	959.60	.011	.700	103.0	83.0	12.0	160.0		.600	400.0
7	1	5.00	961.40	.006	.500	86.0	84.0	5.0	165.0		.600	300.0
7	1	5.00	963.18	.006	.400	89.0	85.0	5.0	165.0		.600	300.0
7	1	5.00	964.95	.006	.350	95.0	86.0	5.5	165.0	65.0	.600	300.0
7	1	5.00	966.73	.006	.300	97.0	87.0	6.5	165.0		.600	300.0
8	1	5.00	969.13	.011	.650	90.0	86.0	10.0	165.0		.600	400.0
8	1	5.00	971.54	.011	.650	96.0	88.0	10.5	165.0		.600	400.0
8	1	5.00	973.93	.011	.650	104.0	88.0	11.5	160.0		.600	400.0
8	1	5.00	976.43	.011	.650	108.0	90.0	12.0	160.0		.600	400.0

DRAFT

DRAFT

TABLE C-4

ORGANIC DATA AND CALCULATED VALUES

RUN- 7 DATE- 12-05-75

ATMOS TEMP (DG.F)	ATMOS PRES (I.HG)	STACK VAC (I.H2O)	H2O COND (ML)	PARTIC WT-PTL (MG)	PARTIC WT-TTL (MG)	STACK AREA (FT2)	INIT VOL (DCF)	PERC O2 DRY	PERC CO2 DRY	PERC CO DRY	PITOT TUBE COEF
50.0	29.25	0.00	624.7	7996.00	48040.40	.20	977.30	9.2	17.2	4.1	.850

PORT-	POINT	SAMP TIME (MIN)	METER VOL (DCF)	DELTA P (I.H2O)	DELTA H (I.H2O)	TEMP IN (D.F)	TEMP OUT (D.F)	TRAIN VAC (I.HG)	STACK TEMP (D.F)	S.GEL TEMP (D.F)	PROBE T DIA (IN)	VEL (FPM)
1	1	5.00	978.81	.004	.300	64.0	66.0	4.0	155.0		.600	250.0
1	1	5.00	980.18	.004	.250	68.0	67.0	4.0	155.0		.600	250.0
1	1	5.00	981.61	.004	.250	72.0	67.0	4.0	150.0	60.0	.600	250.0
1	1	5.00	983.08	.004	.250	74.0	68.0	4.0	150.0		.600	250.0
2	1	5.00	984.80	.006	.350	72.0	70.0	5.0	155.0		.600	300.0
2	1	5.00	986.52	.006	.300	77.0	71.0	6.0	150.0		.600	300.0
2	1	5.00	988.47	.008	.400	85.0	73.0	8.0	150.0	65.0	.600	350.0
2	1	5.00	990.56	.008	.500	88.0	74.0	8.5	150.0		.600	350.0
4	1	5.00	992.31	.006	.350	78.0	76.0	10.0	165.0		.600	300.0
4	1	5.00	994.20	.006	.450	81.0	77.0	11.0	160.0		.600	300.0
4	1	5.00	995.95	.006	.400	90.0	78.0	12.0	165.0		.600	300.0
4	1	5.00	997.72	.006	.400	92.0	79.0	12.0	160.0		.600	300.0
3	1	5.00	999.19	.004	.300	80.0	80.0	4.0	160.0		.600	250.0
3	1	5.00	1000.66	.004	.250	82.0	80.0	5.0	160.0		.600	250.0

DRAFT

DRAFT

TABLE C-4 (Concluded)

RUN- 7 DATE- 12-05-75

PORT-	POINT	SAMP TIME (MIN)	METER VOL (DCF)	DELTA P (I.H2O)	DELTA H (I.H2O)	TEMP IN (D.F)	TEMP OUT (D.F)	TRAIN VAC (I.HG)	STACK TEMP (D.F)	S.GEL TEMP (D.F)	PROBE T DIA (IN)	VEL (FPM)
3	1	5.00	1002.10	.004	.250	88.0	81.0	5.0	160.0	60.0	.600	250.0
3	1	5.00	1003.49	.004	.250	90.0	82.0	6.0	160.0		.600	250.0
5	1	5.00	1005.43	.008	.450	70.0	74.0	9.0	160.0		.600	350.0
5	1	5.00	1007.39	.008	.450	74.0	74.0	10.0	165.0		.600	350.0
5	1	5.00	1009.53	.008	.550	84.0	74.0	11.0	165.0		.600	350.0
5	1	5.00	1011.61	.008	.550	87.0	75.0	11.0	170.0		.600	350.0
6	1	5.00	1013.61	.008	.550	77.0	77.0	5.0	170.0		.600	350.0
6	1	5.00	1015.64	.008	.500	83.0	78.0	9.0	165.0		.600	350.0
6	1	5.00	1017.64	.007	.450	92.0	79.0	10.0	160.0		.600	325.0
6	1	5.00	1019.41	.007	.350	94.0	80.0	9.0	165.0		.600	325.0
7	1	5.00	1021.70	.010	.700	84.0	80.0	12.0	185.0		.600	400.0
7	1	5.00	1023.97	.010	.700	92.0	82.0	12.0	185.0		.600	400.0
7	1	5.00	1026.25	.010	.650	98.0	83.0	12.0	190.0		.600	400.0
7	1	5.00	1028.50	.010	.650	103.0	84.0	12.5	185.0		.600	400.0
8	1	5.00	1029.96	.004	.400	80.0	80.0	5.0	180.0		.600	250.0
8	1	5.00	1031.42	.004	.400	81.0	81.0	9.0	175.0		.600	250.0
8	1	5.00	1032.96	.005	.300	86.0	82.0	9.0	175.0		.600	275.0
8	1	5.00	1034.54	.005	.300	89.0	81.0	9.0	175.0		.600	275.0

DRAFT

DRAFT

TABLE G-5

ORGANIC DATA AND CALCULATED VALUES

RUN- 9 DATE- 12-06-75

ATMOS TEMP (DG.F)	ATMOS PRES (I.HG)	STACK VAC (I.H2O)	H2O COND (ML)	PARTIC WT-PTL (MG)	PARTIC WT-TTL (MG)	STACK AREA (FT2)	INIT VOL (DCF)	PERC O2 DRY	PERC CO2 DRY	PERC CO DRY	PITOT TUBE COEF
40.0	29.65	0.00	316.4	2855.50	6491.20	.20	34.54	6.4	16.1	1.5	.850

PORT-POINT		SAMP TIME (MIN)	METER VOL (DCF)	DELTA P (I.H2O)	DELTA H (I.H2O)	TEMP IN (D.F)	TEMP OUT (D.F)	TRAIN VAC (I.HG)	STACK TEMP (D.F)	S.GEL TEMP (D.F)	PROBE T DIA (IN)	VEL (FPM)
4	1	5.00	36.12	.006	.300	40.0	40.0	4.0	155.0		.600	300.0
4	1	5.00	37.68	.006	.350	43.0	41.0	5.0	160.0		.600	300.0
4	1	5.00	39.44	.006	.400	49.0	42.0	6.5	160.0		.600	300.0
3	1	5.00	41.12	.006	.400	48.0	45.0	8.0	145.0		.600	300.0
3	1	5.00	42.73	.006	.400	51.0	46.0	8.0	145.0		.600	300.0
3	1	5.00	44.51	.006	.400	57.0	47.0	9.0	145.0		.600	300.0
5	1	5.00	46.19	.006	.400	51.0	50.0	9.0	150.0		.600	300.0
5	1	5.00	47.87	.006	.400	55.0	50.0	9.5	155.0		.600	300.0
5	1	5.00	49.55	.006	.350	60.0	51.0	10.0	155.0		.600	300.0
6	1	5.00	50.96	.004	.250	54.0	52.0	10.0	150.0		.600	250.0
6	1	5.00	52.36	.004	.250	58.0	52.0	10.5	155.0		.600	250.0
6	1	5.00	53.76	.004	.250	60.0	53.0	11.0	155.0		.600	250.0

DRAFT

DRAFT

TABLE G-5 (Concluded)

RUN- 9 DATE- 12-06-75

PORT- POINT		SAMP TIME (MIN)	METER VOL (DCF)	DELTA P (I.H2O)	DELTA H (I.H2O)	TEMP IN (D.F)	TEMP OUT (D.F)	TRAIN VAC (I.HG)	STACK TEMP (D.F)	S.GEL TEMP (D.F)	PROBE T DIA (IN)	VEL (FPM)
7	1	5.00	55.53	.006	.400	55.0	54.0	4.0	165.0		.600	300.0
7	1	5.00	57.10	.006	.350	59.0	55.0	5.0	165.0		.600	300.0
7	1	5.00	58.69	.006	.300	63.0	55.0	7.5	165.0		.600	300.0
8	1	5.00	60.44	.006	.400	54.0	55.0	13.0	165.0		.600	300.0
8	1	5.00	62.05	.006	.350	58.0	56.0	13.0	170.0		.600	300.0
8	1	5.00	63.70	.006	.350	63.0	56.0	12.0	170.0		.600	300.0
1	1	5.00	65.39	.006	.350	60.0	56.0	11.0	155.0		.600	300.0
1	1	5.00	67.09	.006	.350	64.0	56.0	12.5	155.0		.600	300.0
1	1	5.00	68.72	.006	.350	68.0	58.0	13.0	160.0		.600	300.0

DRAFT

DRAFT

TABLE G-6

ORGANIC DATA AND CALCULATED VALUES

RUN- 11 DATE- 12-07-75

ATMOS TEMP (DG.F)	ATMOS PRES (I.HG)	STACK VAC (I.H2O)	H2O COND (ML)	PARTIC WT-PTL (MG)	PARTIC WT-TTL (MG)	STACK AREA (FT2)	INIT VOL (DCF)	PERC O2 DRY	PERC CO2 DRY	PERC CO DRY	PITOT TUBE COEF
40.0	29.65	0.00	370.0	4777.90	8821.20	.20	70.83	5.1	18.2	5.5	.850

PORT-	POINT	SAMP TIME (MIN)	METER VOL (DCF)	DELTA P (I.H2O)	DELTA H (I.H2O)	TEMP IN (D.F)	TEMP OUT (D.F)	TRAIN VAC (I.HG)	STACK TEMP (D.F)	S.GEL TEMP (D.F)	PROBE T DIA (IN)	VEL (FPM)
1	1	5.00	72.13	.004	.250	44.0	45.0	3.0	170.0		.600	250.0
1	1	5.00	73.50	.004	.250	47.0	45.0	4.0	170.0		.600	250.0
1	1	5.00	74.86	.004	.250	51.0	45.0	6.0	170.0		.600	250.0
4	1	5.00	76.66	.008	.400	48.0	46.0	9.0	200.0		.600	350.0
4	1	5.00	78.44	.008	.400	53.0	47.0	9.0	200.0		.600	350.0
4	1	5.00	80.25	.008	.400	59.0	47.0	9.5	205.0	56.0	.600	350.0
3	1	5.00	81.87	.006	.300	52.0	48.0	9.5	170.0		.600	300.0
3	1	5.00	83.43	.006	.300	58.0	49.0	11.0	160.0		.600	300.0
3	1	5.00	84.83	.006	.300	62.0	50.0	13.5	160.0		.600	300.0
5	1	5.00	86.49	.006	.350	52.0	50.0	3.0	170.0		.600	300.0
5	1	5.00	88.34	.006	.400	57.0	51.0	3.0	185.0	50.0	.600	300.0
5	1	5.00	90.09	.006	.400	63.0	51.0	4.0	190.0		.600	300.0

DRAFT

DRAFT

TABLE C-6 (Concluded)

RUN- 11 DATE- 12-07-75

PORT- POINT		SAMP TIME (MIN)	METER VOL (DCF)	DELTA P (I.H2O)	DELTA H (I.H2O)	TEMP IN (D.F)	TEMP OUT (D.F)	TRAIN VAC (I.HG)	STACK TEMP (D.F)	S.GEL TEMP (D.F)	PROBE T DIA (IN)	VEL (FPM)
6	1	5.00	91.69	.006	.400	55.0	52.0	4.0	175.0		.600	300.0
6	1	5.00	93.32	.006	.350	59.0	53.0	4.0	180.0		.600	300.0
6	1	5.00	94.94	.006	.350	65.0	54.0	5.0	180.0		.600	300.0
7	1	5.00	96.57	.006	.350	53.0	54.0	5.0	185.0		.600	300.0
7	1	5.00	98.16	.006	.350	57.0	55.0	6.0	195.0	55.0	.600	300.0
7	1	5.00	99.72	.006	.300	61.0	55.0	6.0	190.0		.600	300.0
8	1	5.00	101.28	.006	.300	59.0	55.0	7.0	205.0		.600	300.0
8	1	5.00	102.85	.006	.300	62.0	56.0	8.0	205.0		.600	300.0
8	1	5.00	104.42	.006	.300	65.0	57.0	8.0	205.0		.600	300.0
2	1	5.00	105.74	.005	.250	60.0	58.0	7.0	335.0		.600	300.0
2	1	5.00	107.04	.005	.200	62.0	58.0	7.0	330.0	50.0	.600	300.0
2	1	5.00	108.36	.005	.200	66.0	58.0	8.0	330.0		.600	300.0

DRAFT

DRAFT

TABLE C-7

ORGANIC DATA AND CALCULATED VALUES

RUN- 13 DATE- 12-08-75

ATMOS TEMP (DG.F)	ATMOS PRES (I.HG)	STACK VAC (I.H2O)	H2O COND (ML)	PARTIC WT-PTL (MG)	PARTIC WT-TTL (MG)	STACK AREA (FT2)	INIT VOL (DCF)	PERC O2 DRY	PERC CO2 DRY	PERC CO DRY	PITOT TUBE COEF
40.0	29.35	0.00	52.5	1013.70	1698.20	.20	111.14	1.1	22.3	6.7	.850

PORT-	POINT	SAMP TIME (MIN)	METER VOL (DCF)	DELTA P (I.H2O)	DELTA H (I.H2O)	TEMP IN (D.F)	TEMP OUT (D.F)	TRAIN VAC (I.HG)	STACK TEMP (D.F)	S.GEL TEMP (D.F)	PROBE T DIA (IN)	VEL (FPM)
1	1	5.00	112.45	.005	.250	42.0	45.0	9.0	320.0		.600	300.0
1	1	5.00	113.52	.005	.200	45.0	45.0	14.0	325.0		.600	300.0
1	1	5.00	115.01	.005	.300	50.0	45.0	5.0	290.0		.600	300.0
2	1	5.00	116.04	.003	.100	42.0	44.0	10.0	320.0		.600	250.0
2	1	5.00	116.76	.003	.050	45.0	45.0	15.0	330.0		.600	250.0

DRAFT

DRAFT

TABLE C-8

ORGANIC DATA AND CALCULATED VALUES

RUN- 14 DATE- 12-08-75

ATMOS TEMP (DG.F)	ATMOS PRES (I.HG)	STACK VAC (I.H2O)	H2O COND (ML)	PARTIC WT-PTL (MG)	PARTIC WT-TTL (MG)	STACK AREA (FT2)	INIT VOL (DCF)	PERC O2 DRY	PERC CO2 DRY	PERC CO DRY	PITOT TUBE COEF
40.0	29.35	0.00	176.0	4911.40	6965.90	.20	116.76	1.1	22.3	6.7	.850

PORT-	POINT	SAMP TIME (MIN)	METER VOL (DCF)	DELTA P (I.H2O)	DELTA H (I.H2O)	TEMP IN (D.F)	TEMP OUT (D.F)	TRAIN VAC (I.HG)	STACK TEMP (D.F)	S.GEL TEMP (D.F)	PROBE T DIA (IN)	VEL (FPM)
1	1	5.00	118.09	.005	.200	43.0	45.0	2.5	325.0	50.0	.600	300.0
1	1	5.00	119.36	.005	.200	46.0	46.0	5.0	320.0		.600	300.0
2	1	5.00	120.21	.002	.100	46.0	46.0	7.0	325.0		.600	200.0
2	1	5.00	120.98	.002	.100	47.0	47.0	12.0	330.0		.600	200.0
4	1	5.00	122.15	.003	.200	50.0	48.0	4.0	235.0		.600	220.0
4	1	5.00	123.22	.003	.200	53.0	48.0	10.0	245.0	50.0	.600	220.0
3	1	5.00	124.27	.003	.200	45.0	47.0	4.0	200.0		.600	200.0
3	1	5.00	125.27	.002	.150	47.0	47.0	11.0	215.0		.600	200.0
5	1	5.00	126.59	.006	.250	46.0	47.0	8.0	335.0		.600	340.0
5	1	5.00	127.71	.006	.150	48.0	47.0	8.0	335.0	50.0	.600	340.0
6	1	5.00	129.27	.004	.300	49.0	47.0	4.0	295.0		.600	280.0
6	1	5.00	130.65	.004	.300	54.0	48.0	9.0	325.0		.600	280.0
7	1	5.00	132.00	.004	.300	52.0	49.0	1.0	300.0		.600	280.0
7	1	5.00	133.17	.004	.250	55.0	50.0	2.0	325.0		.600	280.0

DRAFT

DRAFT

DRAFT

TABLE C-9

ORGANIC EMISSION DATA

NAME	DESCRIPTION	UNITS	1	3	5
	DATE OF RUN		12-02-75	12-03-75	12-04-75
DN	PROBE TIP DIAMETER	IN	.600	.600	.600
TT	NET TIME OF RUN	MIN	30.0	240.0	160.0
PB	BAROMETRIC PRESSURE	IN.HG	29.26	29.31	29.31
PM	AVG ORIFICE PRES DROP	IN.H2O	.442	.506	.539
VM	VOL DRY GAS-METER COND	DCF	11.35	96.34	67.08
TM	AVG GAS METER TEMP	DEG.F	68.4	75.5	79.8
VMSTD	VOL DRY GAS-STD COND	DSCF	11.15	93.53	64.61
VW	TOTAL H2O COLLECTED	ML	31.0	675.2	598.0
VWV	VOL H2O VAPOR-STD COND	SCF	1.47	32.00	28.35
PMOS	PERCENT MOISTURE BY VOL		11.6	25.5	30.5
MD	MOLE FRACTION DRY GAS		.884	.745	.695
PCO2	PERCENT CO2 BY VOL, DRY		11.0	11.0	15.0
PO2	PERCENT O2 BY VOL, DRY		9.2	9.2	7.3
PCO	PERCENT CO BY VOL, DRY		1.9	1.9	2.9
PN2	PERCENT N2 BY VOL, DRY		77.9	77.9	74.8
MWD	MOLECULAR WT-DRY STK GAS		30.13	30.13	30.69
MW	MOLECULAR WT-STK GAS		28.72	27.04	26.82
CP	PITOT TUBE COEFFICIENT		.850	.850	.850
DPS	AVG STK VELOCITY HEAD	IN.H2O	.007	.008	.008
TS	AVG STACK TEMPERATURE	DEG.F	52.0	150.5	158.3
NP	NET SAMPLING POINTS		6	48	32
PST	STATIC PRES OF STACK	IN.HG	-0.00	-0.00	-0.00
PS	STACK PRESSURE, ABSOLUTE	IN.HG	29.26	29.31	29.31
VS	AVG STACK GAS VELOCITY	FPM	275	332	353
AS	STACK AREA	IN2	11,310 a/	29	29
QS	STK FLOWRATE, DRY,STD CN	DSCFM	19,326 a/	42	41
QA	ACTUAL STACK FLOWRATE	ACFM	21,601 a/	66	71
PERI	PERCENT ISOKINETIC		76.7	94.0	99.5
MF	PARTICULATE WT-PARTIAL	MG	554.90	1574.60	2515.50
MT	PARTICULATE WT-TOTAL	MG	646.70	3367.30	6815.40
IC	PERC IMPINGER CATCH		14.20	53.24	63.09
CAN	PART. LOAD-PTL,STD CN	GR/DSCF	.76674	.25926	.59961
CAO	PART. LOAD-TTL,STD CN	GR/DSCF	.89358	.55443	1.62455
CAT	PART. LOAD-PTL,STK CN	GR/ACF	.68577	.16427	.34997
CAU	PART. LOAD-TTL,STK CN	GR/ACF	.79922	.35129	.94819
CAW	PARTIC EMIS-PARTIAL	LB/HR	127	.09 b/	.21 b/
CAX	PARTIC EMIS-TOTAL	LB/HR	149	.20 b/	.57 b/
EA	PERCENT EXCESS AIR		67	67	42

a/ Nominal 10-ft (120 in.) diameter stack.

b/ Per stack; to obtain total for kiln, multiply by 8.

DRAFT

DRAFT

TABLE C-9 (Continued)

NAME	DESCRIPTION	UNITS	7	9	11
	DATE OF RUN		12-05-75	12-06-75	12-07-75
DN	PROBE TIP DIAMETER	IN	.600	.600	.600
TT	NET TIME OF RUN	MIN	160.0	105.0	120.0
PB	BAROMETRIC PRESSURE	IN.HG	29.25	29.65	29.65
PM	AVG ORIFICE PRES DROP	IN.H2O	.412	.350	.319
VM	VOL DRY GAS-METER COND	DCF	57.24	34.18	37.53
TM	AVG GAS METER TEMP	DEG.F	79.8	53.3	54.4
VMSTD	VOL DRY GAS-STD COND	DSCF	55.00	35.00	38.35
VW	TOTAL H2O COLLECTED	ML	624.7	316.4	370.0
VWV	VOL H2O VAPOR-STD COND	SCF	29.61	15.00	17.54
PMOS	PERCENT MOISTURE BY VOL		35.0	30.0	31.4
MD	MOLE FRACTION DRY GAS		.650	.700	.686
PCO2	PERCENT CO2 BY VOL, DRY		17.2	16.1	18.2
PO2	PERCENT O2 BY VOL, DRY		9.2	6.4	5.1
PCO	PERCENT CO BY VOL, DRY		4.1	1.5	5.5
PN2	PERCENT N2 BY VOL, DRY		69.5	76.0	71.2
MWD	MOLECULAR WT-DRY STK GAS		31.12	30.83	31.12
MW	MOLECULAR WT-STK GAS		26.53	26.98	27.00
CP	PITOT TUBE COEFFICIENT		.850	.850	.850
DPS	AVG STK VELOCITY HEAD	IN.H2O	.006	.006	.006
TS	AVG STACK TEMPERATURE	DEG.F	164.8	157.1	202.7
NP	NET SAMPLING POINTS		32	21	24
PST	STATIC PRES OF STACK	IN.HG	-0.00	-0.00	-0.00
PS	STACK PRESSURE, ABSOLUTE	IN.HG	29.25	29.65	29.65
VS	AVG STACK GAS VELOCITY	FPM	309	293	300
AS	STACK AREA	IN2	29	29	29
QS	STK FLOWRATE, DRY,STD CN	DSCFM	33	35	33
QA	ACTUAL STACK FLOWRATE	ACFM	62	59	60
PERI	PERCENT ISOKINETIC		104.6	97.0	99.4
MF	PARTICULATE WT-PARTIAL	MG	7996.00	2855.50	4777.90
MT	PARTICULATE WT-TOTAL	MG	48040.40	6491.20	8821.20
IC	PERC IMPINGER CATCH		83.36	56.01	45.84
CAN	PART. LOAD-PTL,STD CN	GR/DSCF	2.23896	1.25636	1.91849
CAO	PART. LOAD-TTL,STD CN	GR/DSCF	13.45180	2.85599	3.54201
CAT	PART. LOAD-PTL,STK CN	GR/ACF	1.20683	.74851	1.04336
CAU	PART. LOAD-TTL,STK CN	GR/ACF	7.25071	1.70152	1.92630
CAW	PARTIC EMIS-PARTIAL	LB/HR	.64 a/	.38 b/	.54 a/
CAX	PARTIC EMIS-TOTAL	LB/HR	3.85 a/	.85 b/	.99 a/
EA	PERCENT EXCESS AIR		64	39	14

a/ Per stack; to obtain total for kiln, multiply by 8.
b/ Per stack; to obtain total for kiln, multiply by 7.

DRAFT

DRAFT

TABLE C-9 (Concluded)

NAME	DESCRIPTION	UNITS	13	14
	DATE OF RUN		12-08-75	12-08-75
DN	PROBE TIP DIAMETER	IN	.600	.600
TT	NET TIME OF RUN	MIN	25.0	70.0
PB	BAROMETRIC PRESSURE	IN.HG	29.35	29.35
PM	AVG ORIFICE PRES DROP	IN.H2O	.180	.207
VM	VOL DRY GAS-METER COND	DCF	5.62	16.41
TM	AVG GAS METER TEMP	DEG.F	44.8	48.0
VMSTD	VOL DRY GAS-STD COND	DSCF	5.79	16.80
VW	TOTAL H2O COLLECTED	ML	52.5	176.0
VWV	VOL H2O VAPOR-STD COND	SCF	2.49	8.34
PMOS	PERCENT MOISTURE BY VOL		30.1	33.2
MD	MOLE FRACTION DRY GAS		.699	.668
PCO2	PERCENT CO2 BY VOL, DRY		22.3	22.3
PO2	PERCENT O2 BY VOL, DRY		1.1	1.1
PCO	PERCENT CO BY VOL, DRY		6.7	6.7
PN2	PERCENT N2 BY VOL, DRY		69.9	69.9
MWD	MOLECULAR WT-DRY STK GAS		31.61	31.61
MW	MOLECULAR WT-STK GAS		27.52	27.10
CP	PITOT TUBE COEFFICIENT		.850	.850
DPS	AVG STK VELOCITY HEAD	IN.H2O	.004	.004
TS	AVG STACK TEMPERATURE	DEG.F	317.0	293.6
NP	NET SAMPLING POINTS		5	14
PST	STATIC PRES OF STACK	IN.HG	-0.00	-0.00
PS	STACK PRESSURE, ABSOLUTE	IN.HG	29.35	29.35
VS	AVG STACK GAS VELOCITY	FPM	280	260
AS	STACK AREA	IN2	29	29
QS	STK FLOWRATE, DRY,STD CN	DSCFM	26	24
QA	ACTUAL STACK FLOWRATE	ACFM	56	52
PERI	PERCENT ISOKINETIC		89.7	101.7
MF	PARTICULATE WT-PARTIAL	MG	1013.70	4911.40
MT	PARTICULATE WT-TOTAL	MG	1698.20	6965.90
IC	PERC IMPINGER CATCH		40.31	29.49
CAN	PART. LOAD-PTL,STD CN	GR/DSCF	2.69585	4.50094
CAO	PART. LOAD-TTL,STD CN	GR/DSCF	4.51621	6.38374
CAT	PART. LOAD-PTL,STK CN	GR/ACF	1.26165	2.07511
CAU	PART. LOAD-TTL,STK CN	GR/ACF	2.11358	2.94315
CAW	PARTIC EMIS-PARTIAL	LB/HR	.61 a/	.92 b/
CAX	PARTIC EMIS-TOTAL	LB/HR	1.01 a/	1.31 b/
EA	PERCENT EXCESS AIR		-11	-11

a/ Per stack; to obtain total, multiply by 1.67.

b/ Per stack; to obtain total for kiln, multiply by 7.

DRAFT

DRAFT

TABLE C-10

ORGANIC EMISSION DATA
(METRIC RESULTS)

NAME	DESCRIPTION	UNITS	1	3	5
	DATE OF RUN		12-02-75	12-03-75	12-04-75
DN	PROBE TIP DIAMETER	IN	.600	.600	.600
TT	NET TIME OF RUN	MIN	30.0	240.0	160.0
PB	BAROMETRIC PRESSURE	IN.HG	29.26	29.31	29.31
PM	AVG ORIFICE PRES DROP	IN.H2O	.442	.506	.539
VM	VOL DRY GAS-METER COND	DCF	11.35	96.34	67.08
TM	AVG GAS METER TEMP	DEG.F	68.4	75.5	79.8
VMSTM	VOL DRY GAS-STD COND	NCM	.32	2.65	1.83
VW	TOTAL H2O COLLECTED	ML	31.0	675.2	598.0
VWM	VOL H2O VAPOR-STD COND	NM3	.04	.91	.80
PMOS	PERCENT MOISTURE BY VOL		11.6	25.5	30.5
MD	MOLE FRACTION DRY GAS		.884	.745	.695
PCO2	PERCENT CO2 BY VOL, DRY		11.0	11.0	15.0
PO2	PERCENT O2 BY VOL, DRY		9.2	9.2	7.3
PCO	PERCENT CO BY VOL, DRY		1.9	1.9	2.9
PN2	PERCENT N2 BY VOL, DRY		77.9	77.9	74.8
MWD	MOLECULAR WT-DRY STK GAS		30.13	30.13	30.69
MW	MOLECULAR WT-STK GAS		28.72	27.04	26.82
CP	PITOT TUBE COEFFICIENT		.850	.850	.850
DPS	AVG STK VELOCITY HEAD	IN.H2O	.007	.008	.008
TSM	AVG STACK TEMPERATURE	DEG.C	11.1	65.8	70.1
NP	NET SAMPLING POINTS		6	48	32
PST	STATIC PRES OF STACK	IN.HG	-0.00	-0.00	-0.00
PS	STACK PRESSURE, ABSOLUTE	IN.HG	29.26	29.31	29.31
VSM	AVG STACK GAS VELOCITY	M/MIN	83.8	101.2	107.7
AS	STACK AREA	IN2	11,310[a]	29	29
QSM	STK FLOWRATE, DRY,STD CN	NM3/MIN	547[a]	1.2	1.2
QAM	ACTUAL STACK FLOWRATE	M3/MIN	612[a]	1.9	2.0
PERI	PERCENT ISOKINETIC		76.7	94.0	99.5
MF	PARTICULATE WT-PARTIAL	MG	554.90	1574.60	2515.50
MT	PARTICULATE WT-TOTAL	MG	646.70	3367.30	6815.40
IC	PERC IMPINGER CATCH		14.20	53.24	63.09
CANM	PART. LOAD-PTL,STD CN	MG/NM3	1754.55	593.28	1372.10
CAOM	PART. LOAD-TTL,STD CN	MG/NM3	2044.82	1268.73	3717.52
CATM	PART. LOAD-PTL,STK CN	MG/M3	1569.28	375.90	800.85
CAUM	PART. LOAD-TTL,STK CN	MG/M3	1828.89	803.87	2169.79
CAWM	PARTIC EMIS-PARTIAL	KG/HR	58	.042[b]	.096[b]
CAXM	PARTIC EMIS-TOTAL	KG/HR	67	.091[b]	.260[b]
EA	PERCENT EXCESS AIR		67	67	42

a/ Nominal 10-ft (120 in.) diameter stack.

b/ Per stack; to obtain total for kiln, multiply by 8.

DRAFT

DRAFT

TABLE C-10 (Continued)

NAME	DESCRIPTION	UNITS	7	9	11
	DATE OF RUN		12-05-75	12-06-75	12-07-75
DN	PROBE TIP DIAMETER	IN	.600	.600	.600
TT	NET TIME OF RUN	MIN	160.0	105.0	120.0
PB	BAROMETRIC PRESSURE	IN.HG	29.25	29.65	29.65
PM	AVG ORIFICE PRES DROP	IN.H2O	.412	.350	.319
VM	VOL DRY GAS-METER COND	DCF	57.24	34.18	37.53
TM	AVG GAS METER TEMP	DEG.F	79.8	53.3	54.4
VMSTM	VOL DRY GAS-STD COND	NCM	1.56	.99	1.09
VW	TOTAL H2O COLLECTED	ML	624.7	316.4	370.0
VWM	VOL H2O VAPOR-STD COND	NM3	.64	.42	.50
PMOS	PERCENT MOISTURE BY VOL		35.0	30.0	31.4
MD	MOLE FRACTION DRY GAS		.650	.700	.686
PCO2	PERCENT CO2 BY VOL, DRY		17.2	16.1	18.2
PO2	PERCENT O2 BY VOL, DRY		9.2	6.4	5.1
PCO	PERCENT CO BY VOL, DRY		4.1	1.5	5.5
PN2	PERCENT N2 BY VOL, DRY		69.5	76.0	71.2
MWD	MOLECULAR WT-DRY STK GAS		31.12	30.83	31.12
MW	MOLECULAR WT-STK GAS		26.53	26.98	27.00
CP	PITOT TUBE COEFFICIENT		.850	.850	.850
DPS	AVG STK VELOCITY HEAD	IN.H2O	.006	.006	.006
TSM	AVG STACK TEMPERATURE	DEG.C	73.8	69.5	94.8
NP	NET SAMPLING POINTS		32	21	24
PST	STATIC PRES OF STACK	IN.HG	-0.00	-0.00	-0.00
PS	STACK PRESSURE, ABSOLUTE	IN.HG	29.25	29.65	29.65
VSM	AVG STACK GAS VELOCITY	M/MIN	94.3	89.3	91.5
AS	STACK AREA	IN2	29	29	29
QSM	STK FLOWRATE, DRY,STD CN	NM3/MIN	.9	1.0	.9
QAM	ACTUAL STACK FLOWRATE	M3/MIN	1.8	1.7	1.7
PERI	PERCENT ISOKINETIC		104.6	97.0	99.4
MF	PARTICULATE WT-PARTIAL	MG	7996.00	2855.50	4777.90
MT	PARTICULATE WT-TOTAL	MG	48040.40	6491.20	8821.20
IC	PERC IMPINGER CATCH		83.36	56.01	45.84
CANM	PART. LOAD-PTL,STD CN	MG/NM3	5123.51	2874.98	4390.16
CAOM	PART. LOAD-TTL,STD CN	MG/NM3	30782.30	6535.49	8105.33
CATM	PART. LOAD-PTL,STK CN	MG/M3	2761.64	1712.83	2387.56
CAUM	PART. LOAD-TTL,STK CN	MG/M3	16592.09	3893.66	4408.03
CAWM	PARTIC EMIS-PARTIAL	KG/HR	.290 a/	.170 b/	.243 a/
CAXM	PARTIC EMIS-TOTAL	KG/HR	1.744 a/	.387 b/	.449 a/
EA	PERCENT EXCESS AIR		64	39	14

a/ Per stack; to obtain total for kiln, multiply by 8.
b/ Per stack; to obtain total for kiln, multiply by 7.

DRAFT

DRAFT

TABLE C-10 (Concluded)

NAME	DESCRIPTION	UNITS	13	14
	DATE OF RUN		12-08-75	12-08-75
DN	PROBE TIP DIAMETER	IN	.600	.600
TT	NET TIME OF RUN	MIN	25.0	70.0
PB	BAROMETRIC PRESSURE	IN.HG	29.35	29.35
PM	AVG ORIFICE PRES DROP	IN.H2O	.180	.207
VM	VOL DRY GAS-METER COND	DCF	5.62	16.41
TM	AVG GAS METER TEMP	DEG.F	44.8	48.0
VMSTM	VOL DRY GAS-STD COND	NCM	.16	.48
VW	TOTAL H2O COLLECTED	ML	52.5	176.0
VWM	VOL H2O VAPOR-STD COND	NM3	.07	.24
PMOS	PERCENT MOISTURE BY VOL		30.1	33.2
MD	MOLE FRACTION DRY GAS		.699	.668
PCO2	PERCENT CO2 BY VOL, DRY		22.3	22.3
PO2	PERCENT O2 BY VOL, DRY		1.1	1.1
PCO	PERCENT CO BY VOL, DRY		6.7	6.7
PN2	PERCENT N2 BY VOL, DRY		69.9	69.9
MWD	MOLECULAR WT-DRY STK GAS		31.61	31.61
MW	MOLECULAR WT-STK GAS		27.52	27.10
CP	PITOT TUBE COEFFICIENT		.850	.850
DPS	AVG STK VELOCITY HEAD	IN.H2O	.004	.004
TSM	AVG STACK TEMPERATURE	DEG.C	158.3	145.3
NP	NET SAMPLING POINTS		5	14
PST	STATIC PRES OF STACK	IN.HG	-0.00	-0.00
PS	STACK PRESSURE, ABSOLUTE	IN.HG	29.35	29.35
VSM	AVG STACK GAS VELOCITY	M/MIN	85.4	79.3
AS	STACK AREA	IN2	29	29
QSM	STK FLOWRATE, DRY,STD CN	NM3/MIN	.7	.7
QAM	ACTUAL STACK FLOWRATE	M3/MIN	1.6	1.5
PERI	PERCENT ISOKINETIC		89.7	101.7
MF	PARTICULATE WT-PARTIAL	MG	1013.70	4911.40
MT	PARTICULATE WT-TOTAL	MG	1698.20	6965.90
IC	PERC IMPINGER CATCH		40.31	29.49
CANM	PART. LOAD-PTL,STD CN	MG/NM3	6169.01	10299.68
CAOM	PART. LOAD-TTL,STD CN	MG/NM3	10334.63	14608.16
CATM	PART. LOAD-PTL,STK CN	MG/M3	2887.09	4748.56
CAUM	PART. LOAD-TTL,STK CN	MG/M3	4836.60	6734.94
CAWM	PARTIC EMIS-PARTIAL	KG/HR	.275 a/	.420 b/
CAXM	PARTIC EMIS-TOTAL	KG/HR	.460 a/	.595 b/
EA	PERCENT EXCESS AIR		-11	-11

a/ Per stack; to obtain total, multiply by 1.67.

b/ Per stack; to obtain total for kiln, multiply by 7.

DRAFT

TABLE C-11

SUMMARY OF RESULTS (ORGANIC)

NAME	DESCRIPTION	UNITS	1	3	5
	DATE OF RUN		12-02-75	12-03-75	12-04-75
VMSTD	VOL DRY GAS-STD COND	DSCF	11.15	93.53	64.61
PMOS	PERCENT MOISTURE BY VOL		11.6	25.5	30.5
TS	AVG STACK TEMPERATURE	DEG.F	52.0	150.5	158.3
QS	STK FLOWRATE, DRY,STD CN	DSCFM	11,310[a]	42	41
QA	ACTUAL STACK FLOWRATE	ACFM	21,601[a]	66	71
PERI	PERCENT ISOKINETIC		76.7	94.0	99.5
PARTICULATES -- PARTIAL CATCH					
MF	PARTICULATE WT-PARTIAL	MG	554.90	1574.60	2515.50
CAN	PART. LOAD-PTL,STD CN	GR/DSCF	.76674	.25926	.59961
CAT	PART. LOAD-PTL,STK CN	GR/ACF	.68577	.16427	.34997
CAW	PARTIC EMIS-PARTIAL	LB/HR	180	.09[b]	.21[b]
PARTICULATES -- TOTAL CATCH					
MT	PARTICULATE WT-TOTAL	MG	646.70	3367.30	6815.40
CAO	PART. LOAD-TTL,STD CN	GR/DSCF	.89358	.55443	1.62455
CAU	PART. LOAD-TTL,STK CN	GR/ACF	.79922	.35129	.94819
CAX	PARTIC EMIS-TOTAL	LB/HR	219	.20[b]	.57[b]
IC	PERC IMPINGER CATCH		14.20	53.24	63.09

a/ Nominal 10-ft (120 in.) diameter stack.

b/ Per stack; to obtain total for kiln, multiply by 8.

DRAFT

DRAFT

TABLE C-11 (Continued)

NAME	DESCRIPTION	UNITS	7	9	11
	DATE OF RUN		12-05-75	12-06-75	12-07-75
VMSTD	VOL DRY GAS-STD COND	DSCF	55.00	35.00	38.35
PMOS	PERCENT MOISTURE BY VOL		35.0	30.0	31.4
TS	AVG STACK TEMPERATURE	DEG.F	164.8	157.1	202.7
QS	STK FLOWRATE, DRY,STD CN	DSCFM	33	35	33
QA	ACTUAL STACK FLOWRATE	ACFM	62	59	60
PERI	PERCENT ISOKINETIC		104.6	97.0	99.4
PARTICULATES -- PARTIAL CATCH					
MF	PARTICULATE WT-PARTIAL	MG	7996.00	2855.50	4777.90
CAN	PART. LOAD-PTL,STD CN	GR/DSCF	2.23896	1.25636	1.91849
CAT	PART. LOAD-PTL,STK CN	GR/ACF	1.20683	.74851	1.04336
CAW	PARTIC EMIS-PARTIAL	LB/HR	.64[a]	.38[b]	.54[a]
PARTICULATES -- TOTAL CATCH					
MT	PARTICULATE WT-TOTAL	MG	48040.40	6491.20	8821.20
CAO	PART. LOAD-TTL,STD CN	GR/DSCF	13.45180	2.85599	3.54201
CAU	PART. LOAD-TTL,STK CN	GR/ACF	7.25071	1.70152	1.92630
CAX	PARTIC EMIS-TOTAL	LB/HR	3.85[a]	.85[b]	.99[a]
IC	PERC IMPINGER CATCH		83.36	56.01	45.84

a/ Per stack; to obtain total for kiln, multiply by 8.
b/ Per stack; to obtain total for kiln, multiply by 7.

DRAFT

DRAFT

TABLE C-11 (Concluded)

NAME	DESCRIPTION	UNITS	13	14
	DATE OF RUN		12-08-75	12-08-75
VMSTD	VOL DRY GAS-STD COND	DSCF	5.79	16.80
PMOS	PERCENT MOISTURE BY VOL		30.1	33.2
TS	AVG STACK TEMPERATURE	DEG.F	317.0	293.6
QS	STK FLOWRATE, DRY,STD CN	DSCFM	26	24
QA	ACTUAL STACK FLOWRATE	ACFM	56	52
PERI	PERCENT ISOKINETIC		89.7	101.7
PARTICULATES -- PARTIAL CATCH				
MF	PARTICULATE WT-PARTIAL	MG	1013.70	4911.40
CAN	PART. LOAD-PTL,STD CN	GR/DSCF	2.69585	4.50094
CAT	PART. LOAD-PTL,STK CN	GR/ACF	1.26165	2.07511
CAW	PARTIC EMIS-PARTIAL	LB/HR	.61 a/	.92 b/
PARTICULATES -- TOTAL CATCH				
MT	PARTICULATE WT-TOTAL	MG	1698.20	6965.90
CAO	PART. LOAD-TTL,STD CN	GR/DSCF	4.51621	6.38374
CAU	PART. LOAD-TTL,STK CN	GR/ACF	2.11358	2.94315
CAX	PARTIC EMIS-TOTAL	LB/HR	1.01 a/	1.31 b/
IC	PERC IMPINGER CATCH		40.31	29.49

a/ Per stack; to obtain total, multiply by 1.67.

b/ Per stack; to obtain total for kiln, multiply by 7.

DRAFT

DRAFT

TABLE C-12

SUMMARY OF RESULTS--METRIC UNITS (ORGANIC)

NAME	DESCRIPTION	UNITS	1	3	5
	DATE OF RUN		12-02-75	12-03-75	12-04-75
VMSTM	VOL DRY GAS-STD COND	NCM	.316	2.649	1.829
PMOS	PERCENT MOISTURE BY VOL		11.6	25.5	30.5
TSM	AVG STACK TEMPERATURE	DEG.C	11.1	65.8	70.1
QSM	STK FLOWRATE, DRY,STD CN	NM3/MIN	547[a/]	1.2	1.2
QAM	ACTUAL STACK FLOWRATE	M3/MIN	612[a/]	1.9	2.0
PERI	PERCENT ISOKINETIC		76.7	94.0	99.5
EA	PERCENT EXCESS AIR		67	67	42
PARTICULATES -- PARTIAL CATCH					
MF	PARTICULATE WT-PARTIAL	MG	554.90	1574.60	2515.50
CANM	PART. LOAD-PTL,STD CN	MG/NM3	1754.55	593.28	1372.10
CATM	PART. LOAD-PTL,STK CN	MG/M3	1569.28	375.90	800.85
CAWM	PARTIC EMIS-PARTIAL	KG/HR	58	.042[b/]	.096[b/]
PARTICULATES -- TOTAL CATCH					
MT	PARTICULATE WT-TOTAL	MG	646.70	3367.30	6815.40
CAOM	PART. LOAD-TTL,STD CN	MG/NM3	2044.82	1268.73	3717.52
CAUM	PART. LOAD-TTL,STK CN	MG/M3	1828.89	803.87	2169.79
CAXM	PARTIC EMIS-TOTAL	KG/HR	67	.091[b/]	.260[b/]
IC	PERC IMPINGER CATCH		14.20	53.24	63.09

a/ Nominal 10-ft (120 in.) diameter stack.

b/ Per stack; to obtain total for kiln, multiply by 8.

DRAFT

DRAFT

TABLE C-12 (Continued)

NAME	DESCRIPTION	UNITS	7	9	11
	DATE OF RUN		12-05-75	12-06-75	12-07-75
VMSTM	VOL DRY GAS-STD COND	NCM	1.557	.991	1.086
PMOS	PERCENT MOISTURE BY VOL		35.0	30.0	31.4
TSM	AVG STACK TEMPERATURE	DEG.C	73.8	69.5	94.8
QSM	STK FLOWRATE, DRY,STD CN	NM3/MIN	.9	1.0	.9
QAM	ACTUAL STACK FLOWRATE	M3/MIN	1.8	1.7	1.7
PERI	PERCENT ISOKINETIC		104.6	97.0	99.4
EA	PERCENT EXCESS AIR		64	39	14
PARTICULATES -- PARTIAL CATCH					
MF	PARTICULATE WT-PARTIAL	MG	7996.00	2855.50	4777.90
CANM	PART. LOAD-PTL,STD CN	MG/NM3	5123.51	2874.98	4390.16
CATM	PART. LOAD-PTL,STK CN	MG/M3	2761.64	1712.83	2387.56
CAWM	PARTIC EMIS-PARTIAL	KG/HR	.290 a/	.170 b/	.243 a/
PARTICULATES -- TOTAL CATCH					
MT	PARTICULATE WT-TOTAL	MG	48040.40	6491.20	8821.20
CAOM	PART. LOAD-TTL,STD CN	MG/NM3	30782.30	6535.49	8105.33
CAUM	PART. LOAD-TTL,STK CN	MG/M3	16592.09	3893.66	4408.03
CAXM	PARTIC EMIS-TOTAL	KG/HR	1.744 a/	.387 b/	.449 a/
IC	PERC IMPINGER CATCH		83.36	56.01	45.84

a/ Per stack; to obtain total for kiln, multiply by 8.
b/ Per stack; to obtain total for kiln, multiply by 7.

DRAFT

DRAFT

TABLE C-12 (Concluded)

NAME	DESCRIPTION	UNITS	13	14
	DATE OF RUN		12-08-75	12-08-75
VMSTM	VOL DRY GAS-STD COND	NCM	.164	.476
PMOS	PERCENT MOISTURE BY VOL		30.1	33.2
TSM	AVG STACK TEMPERATURE	DEG.C	158.3	145.3
QSM	STK FLOWRATE, DRY,STD CN	NM3/MIN	.7	.7
QAM	ACTUAL STACK FLOWRATE	M3/MIN	1.6	1.5
PERI	PERCENT ISOKINETIC		89.7	101.7
EA	PERCENT EXCESS AIR		-11	-11
PARTICULATES -- PARTIAL CATCH				
MF	PARTICULATE WT-PARTIAL	MG	1013.70	4911.40
CANM	PART. LOAD-PTL,STD CN	MG/NM3	6169.01	10299.68
CATM	PART. LOAD-PTL,STK CN	MG/M3	2887.09	4748.56
CAWM	PARTIC EMIS-PARTIAL	KG/HR	.275 a/	.420 b/
PARTICULATES -- TOTAL CATCH				
MT	PARTICULATE WT-TOTAL	MG	1698.20	6965.90
CAOM	PART. LOAD-TTL,STD CN	MG/NM3	10334.63	14608.16
CAUM	PART. LOAD-TTL,STK CN	MG/M3	4836.60	6734.94
CAXM	PARTIC EMIS-TOTAL	KG/HR	.460 a/	.595 b/
IC	PERC IMPINGER CATCH		40.31	29.49

a/ Per stack; to obtain total, multiply by 1.67.

b/ Per stack; to obtain total for kiln, multiply by 7.

DRAFT

DRAFT

DRAFT

APPENDIX D

RESULTS OF ANALYSIS - COMPUTER COMPUTATIONS
(POLYCYCLIC ORGANIC MATERIALS)

DRAFT

TABLE D-1

BENZ[c]PHENANTHRENE DATA AND CALCULATED VALUES

RUN- 2 DATE- 12-03-75

ATMOS TEMP (DG.F)	ATMOS PRES (I.HG)	STACK VAC (I.H2O)	H2O COND (ML)	PARTIC WT-PTL (MG)	PARTIC WT-TTL (MG)	STACK AREA (FT2)	INIT VOL (DCF)	PERC O2 DRY	PERC CO2 DRY	PERC CO DRY	PITOT TUBE COEF
40.0	29.31	0.00	109.8	15.40[a]	15.40[a]	.20	837.66	9.2	11.0	1.9	.850

PORT- POINT		SAMP TIME (MIN)	METER VOL (DCF)	DELTA P (I.H2O)	DELTA H (I.H2O)	TEMP IN (D.F)	TEMP OUT (D.F)	TRAIN VAC (I.HG)	STACK TEMP (D.F)	S.GEL TEMP (D.F)	PROBE T DIA (IN)	VEL (FPM)
1	1	5.00	838.98	.005	.270	43.0	43.0	8.5	140.0		.600	260.0
2	1	5.00	840.69	.006	.400	49.0	49.0	5.0	145.0		.600	300.0
4	1	5.00	842.82	.009	.650	53.0	53.0	5.0	130.0		.600	350.0
3	1	5.00	845.03	.009	.700	58.0	60.0	6.0	140.0		.600	350.0
5	1	5.00	847.27	.011	.700	62.0	62.0	9.0	160.0		.600	400.0
6	1	5.00	849.49	.011	.650	64.0	64.0	7.0	155.0		.600	400.0
7	1	5.00	851.22	.004	.450	65.0	66.0	12.0	165.0		.600	250.0
8	1	5.00	853.23	.008	.550	65.0	65.0	12.0	165.0		.600	350.0

a/ x 10^{-3}.

DRAFT

DRAFT

TABLE D-2

BENZ[c]PHENANTHRENE DATA AND CALCULATED VALUES

RUN- 4 DATE- 12-04-75

ATMOS TEMP (DG.F)	ATMOS PRES (I.HG)	STACK VAC (I.H2O)	H2O COND (ML)	PARTIC WT-PTL (MG)	PARTIC WT-TTL (MG)	STACK AREA (FT2)	INIT VOL (DCF)	PERC O2 DRY	PERC CO2 DRY	PERC CO DRY	PITOT TUBE COEF
50.0	29.31	0.00	134.4	3.40[a]	23.40[a]	.20	853.51	7.3	15.0	2.9	.850

PORT-	POINT	SAMP TIME (MIN)	METER VOL (DCF)	DELTA P (I.H2O)	DELTA H (I.H2O)	TEMP IN (D.F)	TEMP OUT (D.F)	TRAIN VAC (I.HG)	STACK TEMP (D.F)	S.GEL TEMP (D.F)	PROBE T DIA (IN)	VEL (FPM)
1	1	5.00	854.97	.004	.500	64.0	66.0	5.0	150.0		.600	250.0
2	1	5.00	857.01	.008	.600	58.0	60.0	7.5	145.0		.600	350.0
4	1	5.00	859.01	.008	.550	61.0	61.0	5.5	160.0		.600	350.0
3	1	5.00	860.85	.007	.500	64.0	64.0	5.0	160.0		.600	320.0
5	1	5.00	863.15	.011	.700	68.0	68.0	12.0	165.0		.600	400.0
6	1	5.00	865.45	.011	.700	72.0	72.0	9.0	150.0		.600	400.0
7	1	5.00	867.35	.006	.600	73.0	73.0	5.0	160.0		.600	300.0
8	1	5.00	869.71	.011	.700	75.0	75.0	13.0	155.0		.600	400.0

a/ x 10^{-3}.

DRAFT

DRAFT

TABLE D-3

BENZ[c]PHENANTHRENE DATA AND CALCULATED VALUES

RUN- 6 DATE- 12-05-75

ATMOS TEMP (DG.F)	ATMOS PRES (I.HG)	STACK VAC (I.H2O)	H2O COND (ML)	PARTIC WT-PTL (MG)	PARTIC WT-TTL (MG)	STACK AREA (FT2)	INIT VOL (DCF)	PERC O2 DRY	PERC CO2 DRY	PERC CO DRY	PITOT TUBE COEF
50.0	29.25	-0.00	154.8	11.00[a]	11.00[a]	.20	869.81	9.2	17.2	4.1	.850

PORT-	POINT	SAMP TIME (MIN)	METER VOL (DCF)	DELTA P (I.H2O)	DELTA H (I.H2O)	TEMP IN (D.F)	TEMP OUT (D.F)	TRAIN VAC (I.HG)	STACK TEMP (D.F)	S.GEL TEMP (D.F)	PROBE T DIA (IN)	VEL (FPM)
1	1	5.00	871.25	.004	.300	68.0	70.0	5.0	155.0	70.0	.600	250.0
2	1	5.00	872.97	.006	.350	67.0	67.0	5.0	155.0		.600	300.0
4	1	5.00	874.84	.006	.450	67.0	67.0	5.0	150.0		.600	300.0
3	1	5.00	876.42	.004	.300	69.0	69.0	5.0	160.0		.600	250.0
5	1	5.00	878.15	.006	.400	66.0	67.0	7.0	160.0		.600	300.0
6	1	5.00	879.83	.006	.400	68.0	68.0	8.0	165.0		.600	300.0
7	1	5.00	882.05	.010	.700	70.0	70.0	10.5	180.0		.600	400.0
8	1	5.00	883.70	.006	.400	70.0	70.0	7.0	185.0		.600	300.0

a/ x 10^{-3}.

DRAFT

DRAFT

TABLE D-4

BENZ[c]PHENANTHRENE DATA AND CALCULATED VALUES

RUN- 8 DATE- 12-06-75

ATMOS TEMP (DG.F)	ATMOS PRES (I.HG)	STACK VAC (I.H2O)	H2O COND (ML)	PARTIC WT-PTL (MG)	PARTIC WT-TTL (MG)	STACK AREA (FT2)	INIT VOL (DCF)	PERC O2 DRY	PERC CO2 DRY	PERC CO DRY	PITOT TUBE COEF
40.0	29.65	0.00	96.1	0.00[a/]	19.80[b/]	.20	883.70	6.4	16.1	1.5	.850

PORT-POINT		SAMP TIME (MIN)	METER VOL (DCF)	DELTA P (I.H2O)	DELTA H (I.H2O)	TEMP IN (D.F)	TEMP OUT (D.F)	TRAIN VAC (I.HG)	STACK TEMP (D.F)	S.GEL TEMP (D.F)	PROBE T DIA (IN)	VEL (FPM)
4	1	5.00	885.07	.004	.250	44.0	46.0	4.0	150.0		.600	250.0
3	1	5.00	886.77	.006	.400	42.0	42.0	4.0	140.0		.600	300.0
5	1	5.00	888.41	.006	.400	43.0	43.0	4.0	155.0		.600	300.0
6	1	5.00	889.80	.004	.250	44.0	44.0	6.0	145.0	70.0	.600	250.0
7	1	5.00	891.43	.006	.400	44.0	44.0	5.0	160.0		.600	300.0
8	1	5.00	893.04	.006	.400	49.0	49.0	9.0	175.0		.600	300.0
1	1	5.00	894.69	.006	.400	50.0	50.0	9.0	160.0		.600	300.0

a/ Not detectable.
b/ $\times 10^{-3}$.

DRAFT
DRAFT

TABLE D-5

BENZ[c]PHENANTHRENE DATA AND CALCULATED VALUES

RUN- 10 DATE- 12-07-75

ATMOS TEMP (DG.F)	ATMOS PRES (I.HG)	STACK VAC (I.H2O)	H2O COND (ML)	PARTIC WT-PTL (MG)	PARTIC WT-TTL (MG)	STACK AREA (FT2)	INIT VOL (DCF)	PERC O2 DRY	PERC CO2 DRY	PERC CO DRY	PITOT TUBE COEF
40.0	29.65	0.00	168.0	0.00[a/]	10.30[b/]	.20	894.80	5.1	18.2	5.5	.850

PORT-POINT		SAMP TIME (MIN)	METER VOL (DCF)	DELTA P (I.H2O)	DELTA H (I.H2O)	TEMP IN (D.F)	TEMP OUT (D.F)	TRAIN VAC (I.HG)	STACK TEMP (D.F)	S.GEL TEMP (D.F)	PROBE T DIA (IN)	VEL (FPM)
1	1	5.00	896.12	.004	.250	42.0	45.0	5.0	180.0		.600	250.0
4	1	5.00	898.14	.010	.650	41.0	41.0	11.0	205.0		.600	400.0
3	1	5.00	899.48	.004	.250	41.0	41.0	7.0	165.0	50.0	.600	250.0
5	1	5.00	901.06	.006	.300	42.0	42.0	7.0	175.0	60.0	.600	300.0
6	1	5.00	902.40	.004	.250	44.0	44.0	7.0	175.0		.600	250.0
7	1	5.00	903.95	.006	.300	46.0	46.0	8.0	185.0		.600	300.0
8	1	5.00	905.49	.005	.300	48.0	48.0	8.0	215.0	70.0	.600	300.0
2	1	5.00	906.78	.005	.200	49.0	49.0	8.0	335.0		.600	300.0

a/ Not detectable.
b/ $\times 10^{-3}$.

DRAFT
DRAFT

TABLE D-6

BENZ[c]PHENANTHRENE DATA AND CALCULATED VALUES

RUN- 12 DATE- 12-08-75

ATMOS TEMP (DG.F)	ATMOS PRES (I.HG)	STACK VAC (I.H2O)	H2O COND (ML)	PARTIC WT-PTL (MG)	PARTIC WT-TTL (MG)	STACK AREA (FT2)	INIT VOL (DCF)	PERC O2 DRY	PERC CO2 DRY	PERC CO DRY	PITOT TUBE COEF
40.0	29.35	0.00	83.0	0.00a/	27.30b/	.20	908.17	1.1	22.3	6.7	.850

PORT-	POINT	SAMP TIME (MIN)	METER VOL (DCF)	DELTA P (I.H2O)	DELTA H (I.H2O)	TEMP IN (D.F)	TEMP OUT (D.F)	TRAIN VAC (I.HG)	STACK TEMP (D.F)	S.GEL TEMP (D.F)	PROBE T DIA (IN)	VEL (FPM)
1	1	5.00	909.38	.005	.250	51.0	54.0	5.0	360.0		.600	300.0
2	1	5.00	910.51	.003	.200	46.0	46.0	10.0	330.0		.600	250.0
4	1	5.00	911.59	.003	.200	42.0	43.0	4.0	220.0		.600	220.0
3	1	5.00	912.73	.003	.200	44.0	44.0	6.0	170.0		.600	220.0
5	1	5.00	913.88	.004	.150	40.0	40.0	10.0	230.0	50.0	.600	240.0
6	1	5.00	915.17	.004	.200	41.0	41.0	4.0	190.0		.600	250.0
7	1	5.00	916.16	.003	.150	45.0	42.0	10.0	310.0		.600	220.0

a/ Not detectable.
b/ x 10^{-3}.

DRAFT
DRAFT

DRAFT

TABLE D-7

BENZ[c]PHENANTHRENE EMISSION DATA

NAME	DESCRIPTION	UNITS	2	4	6
	DATE OF RUN		12-03-75	12-04-75	12-05-75
DN	PROBE TIP DIAMETER	IN	.600	.600	.600
TT	NET TIME OF RUN	MIN	40.0	40.0	40.0
PB	BAROMETRIC PRESSURE	IN.HG	29.31	29.31	29.25
PM	AVG ORIFICE PRES DROP	IN.H2O	.546	.606	.412
VM	VOL DRY GAS-METER COND	DCF	15.57	16.20	13.89
TM	AVG GAS METER TEMP	DEG.F	57.6	67.1	68.3
VMSTD	VOL DRY GAS-STD COND	DSCF	15.64	15.98	13.64
VW	TOTAL H2O COLLECTED	ML	109.8	134.4	154.8
VWV	VOL H2O VAPOR-STD COND	SCF	5.20	6.37	7.34
PMOS	PERCENT MOISTURE BY VOL		25.0	28.5	35.0
MD	MOLE FRACTION DRY GAS		.750	.715	.650
PCO2	PERCENT CO2 BY VOL, DRY		11.0	15.0	17.2
PO2	PERCENT O2 BY VOL, DRY		9.2	7.3	9.2
PCO	PERCENT CO BY VOL, DRY		1.9	2.9	4.1
PN2	PERCENT N2 BY VOL, DRY		77.9	74.8	69.5
MWD	MOLECULAR WT-DRY STK GAS		30.13	30.69	31.12
MW	MOLECULAR WT-STK GAS		27.10	27.07	26.53
CP	PITOT TUBE COEFFICIENT		.850	.850	.850
DPS	AVG STK VELOCITY HEAD	IN.H2O	.008	.008	.006
TS	AVG STACK TEMPERATURE	DEG.F	150.0	155.6	163.8
NP	NET SAMPLING POINTS		8	8	8
PST	STATIC PRES OF STACK	IN.HG	-0.00	-0.00	-0.00
PS	STACK PRESSURE, ABSOLUTE	IN.HG	29.31	29.31	29.25
VS	AVG STACK GAS VELOCITY	FPM	333	346	300
AS	STACK AREA	IN2	29	29	29
QS	STK FLOWRATE, DRY,STD CN	DSCFM	42	42	32
QA	ACTUAL STACK FLOWRATE	ACFM	67	69	60
PERI	PERCENT ISOKINETIC		93.5	97.1	106.8
MF	PARTICULATE WT-PARTIAL[a]	MG	15.40	3.40	11.00
MT	PARTICULATE WT-TOTAL[a]	MG	15.40	23.40	11.00
IC	PERC IMPINGER CATCH		0.00	85.47	0.00
CAN	PART. LOAD-PTL,STD CN[a]	GR/DSCF	.01516	.00328	.01242
CAO	PART. LOAD-TTL,STD CN[a]	GR/DSCF	.01516	.02255	.01242
CAT	PART. LOAD-PTL,STK CN[a]	GR/ACF	.00968	.00198	.00671
CAU	PART. LOAD-TTL,STK CN[a]	GR/ACF	.00968	.01360	.00671
CAW	PARTIC EMIS-PARTIAL[a]	LB/HR	.00552[b]	.00117[b]	.00345[b]
CAX	PARTIC EMIS-TOTAL[a]	LB/HR	.00552[b]	.00807[b]	.00345[b]
EA	PERCENT EXCESS AIR		67	42	64

a/ x 10^{-3}.

b/ Per stack; to obtain total for kiln, multiply by 8.

DRAFT

DRAFT

TABLE D-7 (Concluded)

NAME	DESCRIPTION	UNITS	8	10	12
	DATE OF RUN		12-06-75	12-07-75	12-08-75
DN	PROBE TIP DIAMETER	IN	.600	.600	.600
TT	NET TIME OF RUN	MIN	35.0	40.0	35.0
PB	BAROMETRIC PRESSURE	IN.HG	29.65	29.65	29.35
PM	AVG ORIFICE PRES DROP	IN.H2O	.357	.312	.193
VM	VOL DRY GAS-METER COND	DCF	10.99	11.98	7.99
TM	AVG GAS METER TEMP	DEG.F	45.3	44.3	44.2
VMSTD	VOL DRY GAS-STD COND	DSCF	11.43	12.49	8.24
VW	TOTAL H2O COLLECTED	ML	96.1	168.0	83.0
VWV	VOL H2O VAPOR-STD COND	SCF	4.56	7.96	3.93
PMOS	PERCENT MOISTURE BY VOL		28.5	38.9	32.3
MD	MOLE FRACTION DRY GAS		.715	.611	.677
PCO2	PERCENT CO2 BY VOL, DRY		16.1	18.2	22.3
PO2	PERCENT O2 BY VOL, DRY		6.4	5.1	1.1
PCO	PERCENT CO BY VOL, DRY		1.5	5.5	6.7
PN2	PERCENT N2 BY VOL, DRY		76.0	71.2	69.9
MWD	MOLECULAR WT-DRY STK GAS		30.83	31.12	31.61
MW	MOLECULAR WT-STK GAS		27.18	26.01	27.21
CP	PITOT TUBE COEFFICIENT		.850	.850	.850
DPS	AVG STK VELOCITY HEAD	IN.H2O	.006	.005	.003
TS	AVG STACK TEMPERATURE	DEG.F	155.0	204.4	258.6
NP	NET SAMPLING POINTS		7	8	7
PST	STATIC PRES OF STACK	IN.HG	-0.00	-0.00	-0.00
PS	STACK PRESSURE, ABSOLUTE	IN.HG	29.65	29.65	29.35
VS	AVG STACK GAS VELOCITY	FPM	286	294	243
AS	STACK AREA	IN2	29	29	29
QS	STK FLOWRATE, DRY,STD CN	DSCFM	35	28	24
QA	ACTUAL STACK FLOWRATE	ACFM	57	59	49
PERI	PERCENT ISOKINETIC		95.0	111.8	100.5
MF	PARTICULATE WT-PARTIAL[a]	MG	0.00	0.00	0.00
MT	PARTICULATE WT-TOTAL[a]	MG	19.80	10.30	27.30
IC	PERC IMPINGER CATCH		100.00	100.00	100.00
CAN	PART. LOAD-PTL,STD CN[a]	GR/DSCF	0.00000	0.00000	0.00000
CAO	PART. LOAD-TTL,STD CN[a]	GR/DSCF	.02667	.01270	.05101
CAT	PART. LOAD-PTL,STK CN[a]	GR/ACF	0.00000	0.00000	0.00000
CAU	PART. LOAD-TTL,STK CN[a]	GR/ACF	.01629	.00613	.02498
CAW	PARTIC EMIS-PARTIAL[a]	LB/HR	0.00000	0.00000	0.00000
CAX	PARTIC EMIS-TOTAL[a]	LB/HR	.00798[b]	.00309[c]	.01040[b]
EA	PERCENT EXCESS AIR		39	14	-11

a/ x 10^{-3}.

b/ Per stack; to obtain total for kiln, multiply by 7.

c/ Per stack; to obtain total for kiln, multiply by 8.

DRAFT

DRAFT

TABLE D-8

BENZ[c]PHENANTHRENE EMISSION DATA (METRIC RESULTS)

NAME	DESCRIPTION	UNITS	2	4	6
	DATE OF RUN		12-03-75	12-04-75	12-05-75
DN	PROBE TIP DIAMETER	IN	.600	.600	.600
TT	NET TIME OF RUN	MIN	40.0	40.0	40.0
PB	BAROMETRIC PRESSURE	IN.HG	29.31	29.31	29.25
PM	AVG ORIFICE PRES DROP	IN.H2O	.546	.606	.412
VM	VOL DRY GAS-METER COND	DCF	15.57	16.20	13.89
TM	AVG GAS METER TEMP	DEG.F	57.6	67.1	68.3
VMSTM	VOL DRY GAS-STD COND	NCM	.44	.45	.39
VW	TOTAL H2O COLLECTED	ML	109.8	134.4	154.8
VWM	VOL H2O VAPOR-STD COND	NM3	.15	.18	.21
PMOS	PERCENT MOISTURE BY VOL		25.0	28.5	35.0
MD	MOLE FRACTION DRY GAS		.750	.715	.650
PCO2	PERCENT CO2 BY VOL, DRY		11.0	15.0	17.2
PO2	PERCENT O2 BY VOL. DRY		9.2	7.3	9.2
PCO	PERCENT CO BY VOL, DRY		1.9	2.9	4.1
PN2	PERCENT N2 BY VOL, DRY		77.9	74.8	69.5
MWD	MOLECULAR WT-DRY STK GAS		30.13	30.69	31.12
MW	MOLECULAR WT-STK GAS		27.10	27.07	26.53
CP	PITOT TUBE COEFFICIENT		.850	.850	.850
DPS	AVG STK VELOCITY HEAD	IN.H2O	.008	.009	.006
TSM	AVG STACK TEMPERATURE	DEG.C	65.5	68.7	73.2
NP	NET SAMPLING POINTS		8	8	8
PST	STATIC PRES OF STACK	IN.HG	-0.00	-0.00	-0.00
PS	STACK PRESSURE, ABSOLUTE	IN.HG	29.31	29.31	29.25
VSM	AVG STACK GAS VELOCITY	M/MIN	101.4	105.6	91.5
AS	STACK AREA	IN2	29	29	29
QSM	STK FLOWRATE, DRY,STD CN	NM3/MIN	1.2	1.2	.9
QAM	ACTUAL STACK FLOWRATE	M3/MIN	1.9	2.0	1.7
PERI	PERCENT ISOKINETIC		93.5	97.1	106.8
MF	PARTICULATE WT-PARTIAL a/	MG	15.40	3.40	11.00
MT	PARTICULATE WT-TOTAL a/	MG	15.40	23.40	11.00
IC	PERC IMPINGER CATCH		0.00	85.47	0.00
CANM	PART. LOAD-PTL,STD CN a/	MG/NM3	34.70	7.50	28.43
CAOM	PART. LOAD-TTL,STD CN a/	MG/NM3	34.70	51.60	28.43
CATM	PART. LOAD-PTL,STK CN a/	MG/M3	22.16	4.52	15.35
CAUM	PART. LOAD-TTL,STK CN a/	MG/M3	22.16	31.12	15.35
CAWM	PARTIC EMIS-PARTIAL a/	KG/HR	.00250 b/	.00053 b/	.00157 b/
CAXM	PARTIC EMIS-TOTAL a/	KG/HR	.00250 b/	.00366 b/	.00157 b/
EA	PERCENT EXCESS AIR		67	42	64

a/ x 10^{-3}.

b/ Per stack; to obtain total for kiln, multiply by 8.

DRAFT

DRAFT

TABLE D-8 (Concluded)

NAME	DESCRIPTION	UNITS	8	10	12
	DATE OF RUN		12-06-75	12-07-75	12-08-75
DN	PROBE TIP DIAMETER	IN	.600	.600	.600
TT	NET TIME OF RUN	MIN	35.0	40.0	35.0
PB	BAROMETRIC PRESSURE	IN.HG	29.65	29.65	29.35
PM	AVG ORIFICE PRES DROP	IN.H2O	.357	.312	.193
VM	VOL DRY GAS-METER COND	DCF	10.99	11.98	7.99
TM	AVG GAS METER TEMP	DEG.F	45.3	44.3	44.2
VMSTM	VOL DRY GAS-STD COND	NCM	.32	.35	.23
VW	TOTAL H2O COLLECTED	ML	96.1	168.0	83.0
VWM	VOL H2O VAPOR-STD COND	NM3	.13	.23	.11
PMOS	PERCENT MOISTURE BY VOL		28.5	38.9	32.3
MD	MOLE FRACTION DRY GAS		.715	.611	.677
PCO2	PERCENT CO2 BY VOL, DRY		16.1	18.2	22.3
PO2	PERCENT O2 BY VOL, DRY		6.4	5.1	1.1
PCO	PERCENT CO BY VOL, DRY		1.5	5.5	6.7
PN2	PERCENT N2 BY VOL, DRY		76.0	71.2	69.9
MWD	MOLECULAR WT-DRY STK GAS		30.83	31.12	31.61
MW	MOLECULAR WT-STK GAS		27.18	26.01	27.21
CP	PITOT TUBE COEFFICIENT		.850	.850	.850
DPS	AVG STK VELOCITY HEAD	IN.H2O	.006	.005	.003
TSM	AVG STACK TEMPERATURE	DEG.C	68.3	95.8	125.9
NP	NET SAMPLING POINTS		7	8	7
PST	STATIC PRES OF STACK	IN.HG	-0.00	-0.00	-0.00
PS	STACK PRESSURE, ABSOLUTE	IN.HG	29.65	29.65	29.35
VSM	AVG STACK GAS VELOCITY	M/MIN	87.1	89.6	74.0
AS	STACK AREA	IN2	29	29	29
QSM	STK FLOWRATE, DRY,STD CN	NM3/MIN	1.0	.8	.7
QAM	ACTUAL STACK FLOWRATE	M3/MIN	1.6	1.7	1.4
PERI	PERCENT ISOKINETIC		95.0	111.8	100.5
MF	PARTICULATE WT-PARTIAL[a]	MG	0.00	0.00	0.00
MT	PARTICULATE WT-TOTAL[a]	MG	19.80	10.30	27.30
IC	PERC IMPINGER CATCH		100.00	100.00	100.00
CANM	PART. LOAD-PTL,STD CN[a]	MG/NM3	0.00	0.00	0.00
CAOM	PART. LOAD-TTL,STD CN[a]	MG/NM3	61.03	29.07	116.72
CATM	PART. LOAD-PTL,STK CN[a]	MG/M3	0.00	0.00	0.00
CAUM	PART. LOAD-TTL,STK CN[a]	MG/M3	37.27	14.03	57.16
CAWM	PARTIC EMIS-PARTIAL[a]	KG/HR	0.00000	0.00000	0.00000
CAXM	PARTIC EMIS-TOTAL[a]	KG/HR	.00362[b]	.00140[c]	.00472[b]
EA	PERCENT EXCESS AIR		39	14	-11

a/ x 10^{-3}.

b/ Per stack; to obtain total for kiln, multiply by 7.

c/ Per stack; to obtain total for kiln, multiply by 8.

DRAFT

TABLE D-9

SUMMARY OF RESULTS (BENZ[c]PHENANTHRENE)

NAME	DESCRIPTION	UNITS	2	4	6
	DATE OF RUN		12-03-75	12-04-75	12-05-75
VMSTD	VOL DRY GAS-STD COND	DSCF	15.64	15.98	13.64
PMOS	PERCENT MOISTURE BY VOL		25.0	28.5	35.0
TS	AVG STACK TEMPERATURE	DEG.F	150.0	155.6	163.8
QS	STK FLOWRATE, DRY,STD CN	DSCFM	42	42	32
QA	ACTUAL STACK FLOWRATE	ACFM	67	69	60
PERI	PERCENT ISOKINETIC		93.5	97.1	106.8
PARTICULATES -- PARTIAL CATCH					
MF	PARTICULATE WT-PARTIAL[a]	MG	15.40	3.40	11.00
CAN	PART. LOAD-PTL,STD CN[a]	GR/DSCF	.01516	.00328	.01242
CAT	PART. LOAD-PTL,STK CN[a]	GR/ACF	.00968	.00198	.00671
CAW	PARTIC EMIS-PARTIAL[a]	LB/HR	.00552[b]	.00117[b]	.00345[b]
PARTICULATES -- TOTAL CATCH					
MT	PARTICULATE WT-TOTAL[a]	MG	15.40	23.40	11.00
CAO	PART. LOAD-TTL,STD CN[a]	GR/DSCF	.01516	.02255	.01242
CAU	PART. LOAD-TTL,STK CN[a]	GR/ACF	.00968	.01360	.00671
CAX	PARTIC EMIS-TOTAL[a]	LB/HR	.00552[b]	.00807[b]	.00345[b]
IC	PERC IMPINGER CATCH		0.00	85.47	0.00

a/ x 10^{-3}.

b/ Per stack; to obtain total for kiln, multiply by 8.

DRAFT

DRAFT

TABLE D-9 (Concluded)

NAME	DESCRIPTION	UNITS	8	10	12
	DATE OF RUN		12-06-75	12-07-75	12-08-75
VMSTD	VOL DRY GAS-STD COND	DSCF	11.43	12.49	8.24
PMOS	PERCENT MOISTURE BY VOL		28.5	38.9	32.3
TS	AVG STACK TEMPERATURE	DEG.F	155.0	204.4	258.6
QS	STK FLOWRATE, DRY,STD CN	DSCFM	35	28	24
QA	ACTUAL STACK FLOWRATE	ACFM	57	59	49
PERI	PERCENT ISOKINETIC		95.0	111.8	100.5
PARTICULATES -- PARTIAL CATCH					
MF	PARTICULATE WT-PARTIAL	MG	0.00	0.00	0.00
CAN	PART. LOAD-PTL,STD CN	GR/DSCF	0.00000	0.00000	0.00000
CAT	PART. LOAD-PTL,STK CN	GR/ACF	0.00000	0.00000	0.00000
CAW	PARTIC EMIS-PARTIAL	LB/HR	0.00000	0.00000	0.00000
PARTICULATES -- TOTAL CATCH					
MT	PARTICULATE WT-TOTAL[a]	MG	19.80	10.30	27.30
CAO	PART. LOAD-TTL,STD CN[a]	GR/DSCF	.02667	.01270	.05101
CAU	PART. LOAD-TTL,STK CN[a]	GR/ACF	.01629	.00613	.02498
CAX	PARTIC EMIS-TOTAL[a]	LB/HR	.00798[b]	.00309[c]	.01040[b]
IC	PERC IMPINGER CATCH		100.00	100.00	100.00

a/ x 10^{-3}.

b/ Per stack; to obtain total for kiln, multiply by 7.

c/ Per stack; to obtain total for kiln, multiply by 8.

DRAFT

DRAFT

TABLE D-10

SUMMARY OF RESULTS--METRIC UNITS (BENZ[c]PHENANTHRENE)

NAME	DESCRIPTION	UNITS	2	4	6
	DATE OF RUN		12-03-75	12-04-75	12-05-75
VMSTM	VOL DRY GAS-STD COND	NCM	.443	.453	.386
PMOS	PERCENT MOISTURE BY VOL		25.0	28.5	35.0
TSM	AVG STACK TEMPERATURE	DEG.C	65.5	68.7	73.2
QSM	STK FLOWRATE, DRY,STD CN	NM3/MIN	1.2	1.2	.9
QAM	ACTUAL STACK FLOWRATE	M3/MIN	1.9	2.0	1.7
PERI	PERCENT ISOKINETIC		93.5	97.1	106.8
EA	PERCENT EXCESS AIR		67	42	64
PARTICULATES -- PARTIAL CATCH					
MF	PARTICULATE WT-PARTIAL[a]	MG	15.40	3.40	11.00
CANM	PART. LOAD-PTL,STD CN[a]	MG/NM3	34.70	7.50	28.43
CATM	PART. LOAD-PTL,STK CN[a]	MG/M3	22.16	4.52	15.35
CAWM	PARTIC EMIS-PARTIAL[a]	KG/HR	.00250[b]	.00053[b]	.00157[b]
PARTICULATES -- TOTAL CATCH					
MT	PARTICULATE WT-TOTAL[a]	MG	15.40	23.40	11.00
CAOM	PART. LOAD-TTL,STD CN[a]	MG/NM3	34.70	51.60	28.43
CAUM	PART. LOAD-TTL,STK CN[a]	MG/M3	22.16	31.12	15.35
CAXM	PARTIC EMIS-TOTAL[a]	KG/HR	.00250[b]	.00366[b]	.00157[b]
IC	PERC IMPINGER CATCH		0.00	85.47	0.00

a/ x 10^{-3}.

b/ Per stack; to obtain total for kiln, multiply by 8.

DRAFT

DRAFT

TABLE D-10 (Concluded)

NAME	DESCRIPTION	UNITS	8	10	12
	DATE OF RUN		12-06-75	12-07-75	12-08-75
VMSTM	VOL DRY GAS-STD COND	NCM	.324	.354	.233
PMOS	PERCENT MOISTURE BY VOL		28.5	38.9	32.3
TSM	AVG STACK TEMPERATURE	DEG.C	68.3	95.8	125.9
QSM	STK FLOWRATE, DRY,STD CN	NM3/MIN	1.0	.8	.7
QAM	ACTUAL STACK FLOWRATE	M3/MIN	1.6	1.7	1.4
PERI	PERCENT ISOKINETIC		95.0	111.8	100.5
EA	PERCENT EXCESS AIR		39	14	-11
PARTICULATES -- PARTIAL CATCH					
MF	PARTICULATE WT-PARTIAL	MG	0.00	0.00	0.00
CANM	PART. LOAD-PTL,STD CN	MG/NM3	0.00	0.00	0.00
CATM	PART. LOAD-PTL,STK CN	MG/M3	0.00	0.00	0.00
CAWM	PARTIC EMIS-PARTIAL	KG/HR	0.00000	0.00000	0.00000
PARTICULATES -- TOTAL CATCH					
MT	PARTICULATE WT-TOTAL[a]	MG	19.80	10.30	27.30
CAOM	PART. LOAD-TTL,STD CN[a]	MG/NM3	61.03	29.07	116.72
CAUM	PART. LOAD-TTL,STK CN[a]	MG/M3	37.27	14.03	57.16
CAXM	PARTIC EMIS-TOTAL[a]	KG/HR	.00362[b]	.00140[c]	.00472[b]
IC	PERC IMPINGER CATCH		100.00	100.00	100.00

a/ x 10^{-3}.

b/ Per stack; to obtain total for kiln, multiply by 7.

c/ Per stack; to obtain total for kiln, multiply by 8.

DRAFT

DRAFT

TABLE D-11

BENZ[a]PYRENE DATA AND CALCULATED VALUES

RUN- 4 DATE- 12-04-75

ATMOS TEMP (DG.F)	ATMOS PRES (I.HG)	STACK VAC (I.H2O)	H2O COND (ML)	PARTIC WT-PTL (MG)	PARTIC WT-TTL (MG)	STACK AREA (FT2)	INIT VOL (DCF)	PERC O2 DRY	PERC CO2 DRY	PERC CO DRY	PITOT TUBE COEF
50.0	29.31	0.00	134.4	3.40[a/]	14.30[a/]	.20	853.51	7.3	15.0	2.9	.850

PORT-	POINT	SAMP TIME (MIN)	METER VOL (DCF)	DELTA P (I.H2O)	DELTA H (I.H2O)	TEMP IN (D.F)	TEMP OUT (D.F)	TRAIN VAC (I.HG)	STACK TEMP (D.F)	S.GEL TEMP (D.F)	PROBE T DIA (IN)	VEL (FPM)
1	1	5.00	854.97	.004	.500	64.0	66.0	5.0	150.0		.600	250.0
2	1	5.00	857.01	.008	.600	58.0	60.0	7.5	145.0		.600	350.0
4	1	5.00	859.01	.008	.550	61.0	61.0	5.5	160.0		.600	350.0
3	1	5.00	860.85	.007	.500	64.0	64.0	5.0	160.0		.600	320.0
5	1	5.00	863.15	.011	.700	68.0	68.0	12.0	165.0		.600	400.0
6	1	5.00	865.45	.011	.700	72.0	72.0	9.0	150.0		.600	400.0
7	1	5.00	867.35	.006	.600	73.0	73.0	5.0	160.0		.600	300.0
8	1	5.00	869.71	.011	.700	75.0	75.0	13.0	155.0		.600	400.0

a/ x 10^{-3}.

DRAFT
DRAFT

TABLE D-12

BENZ[a]PYRENE DATA AND CALCULATED VALUES

RUN- 6 DATE- 12-05-75

ATMOS TEMP (DG.F)	ATMOS PRES (I.HG)	STACK VAC (I.H2O)	H2O COND (ML)	PARTIC WT-PTL (MG)	PARTIC WT-TTL (MG)	STACK AREA (FT2)	INIT VOL (DCF)	PERC O2 DRY	PERC CO2 DRY	PERC CO DRY	PITOT TUBE COEF
50.0	29.25	-0.00	154.8	3.20[a/]	7.20[a/]	.20	869.81	9.2	17.2	4.1	.850

PORT-	POINT	SAMP TIME (MIN)	METER VOL (DCF)	DELTA P (I.H2O)	DELTA H (I.H2O)	TEMP IN (D.F)	TEMP OUT (D.F)	TRAIN VAC (I.HG)	STACK TEMP (D.F)	S.GEL TEMP (D.F)	PROBE T DIA (IN)	VEL (FPM)
1	1	5.00	871.25	.004	.300	68.0	70.0	5.0	155.0	70.0	.600	250.0
2	1	5.00	872.97	.006	.350	67.0	67.0	5.0	155.0		.600	300.0
4	1	5.00	874.84	.006	.450	67.0	67.0	5.0	150.0		.600	300.0
3	1	5.00	876.42	.004	.300	69.0	69.0	5.0	160.0		.600	250.0
5	1	5.00	878.15	.006	.400	66.0	67.0	7.0	160.0		.600	300.0
6	1	5.00	879.83	.006	.400	68.0	68.0	8.0	165.0		.600	300.0
7	1	5.00	882.05	.010	.700	70.0	70.0	10.5	180.0		.600	400.0
8	1	5.00	883.70	.006	.400	70.0	70.0	7.0	185.0		.600	300.0

a/ x 10^{-3}.

DRAFT

DRAFT

TABLE D-13

BENZ[a]PYRENE DATA AND CALCULATED VALUES

RUN- 8 DATE- 12-06-75

ATMOS TEMP (DG.F)	ATMOS PRES (I.HG)	STACK VAC (I.H2O)	H2O COND (ML)	PARTIC WT-PTL (MG)	PARTIC WT-TTL (MG)	STACK AREA (FT2)	INIT VOL (DCF)	PERC O2 DRY	PERC CO2 DRY	PERC CO DRY	PITOT TUBE COEF
40.0	29.65	0.00	96.1	0.00a/	6.60b/	.20	883.70	6.4	16.1	1.5	.850

PORT-POINT		SAMP TIME (MIN)	METER VOL (DCF)	DELTA P (I.H2O)	DELTA H (I.H2O)	TEMP IN (D.F)	TEMP OUT (D.F)	TRAIN VAC (I.HG)	STACK TEMP (D.F)	S.GEL TEMP (D.F)	PROBE T DIA (IN)	VEL (FPM)
4	1	5.00	885.07	.004	.250	44.0	46.0	4.0	150.0		.600	250.0
3	1	5.00	886.77	.006	.400	42.0	42.0	4.0	140.0		.600	300.0
5	1	5.00	888.41	.006	.400	43.0	43.0	4.0	155.0		.600	300.0
6	1	5.00	889.80	.004	.250	44.0	44.0	6.0	145.0	70.0	.600	250.0
7	1	5.00	891.43	.006	.400	44.0	44.0	5.0	160.0		.600	300.0
8	1	5.00	893.04	.006	.400	49.0	49.0	9.0	175.0		.600	300.0
1	1	5.00	894.69	.006	.400	50.0	50.0	9.0	160.0		.600	300.0

a/ Not detectable.
b/ $\times 10^{-3}$.

DRAFT
DRAFT

TABLE D-14

BENZ[a]PYRENE DATA AND CALCULATED VALUES

RUN- 10 DATE- 12-07-75

ATMOS TEMP (DG.F)	ATMOS PRES (I.HG)	STACK VAC (I.H2O)	H2O COND (ML)	PARTIC WT-PTL (MG)	PARTIC WT-TTL (MG)	STACK AREA (FT2)	INIT VOL (DCF)	PERC O2 DRY	PERC CO2 DRY	PERC CO DRY	PITOT TUBE COEF
40.0	29.65	0.00	168.0	0.00a/	16.80b/	.20	894.80	5.1	18.2	5.5	.850

PORT-POINT		SAMP TIME (MIN)	METER VOL (DCF)	DELTA P (I.H2O)	DELTA H (I.H2O)	TEMP IN (D.F)	TEMP OUT (D.F)	TRAIN VAC (I.HG)	STACK TEMP (D.F)	S.GEL TEMP (D.F)	PROBE T DIA (IN)	VEL (FPM)
1	1	5.00	896.12	.004	.250	42.0	45.0	5.0	180.0		.600	250.0
4	1	5.00	898.14	.010	.650	41.0	41.0	11.0	205.0		.600	400.0
3	1	5.00	899.48	.004	.250	41.0	41.0	7.0	165.0	50.0	.600	250.0
5	1	5.00	901.06	.006	.300	42.0	42.0	7.0	175.0	60.0	.600	300.0
6	1	5.00	902.40	.004	.250	44.0	44.0	7.0	175.0		.600	250.0
7	1	5.00	903.95	.006	.300	46.0	46.0	8.0	185.0		.600	300.0
8	1	5.00	905.49	.005	.300	48.0	48.0	8.0	215.0	70.0	.600	300.0
2	1	5.00	906.78	.005	.200	49.0	49.0	8.0	335.0		.600	300.0

a/ Not detectable.
b/ $\times 10^{-3}$.

DRAFT
DRAFT

TABLE D-15

BENZ[a]PYRENE DATA AND CALCULATED VALUES

RUN- 12 DATE- 12-08-75

ATMOS TEMP (DG.F)	ATMOS PRES (I.HG)	STACK VAC (I.H2O)	H2O COND (ML)	PARTIC WT-PTL (MG)	PARTIC WT-TTL (MG)	STACK AREA (FT2)	INIT VOL (DCF)	PERC O2 DRY	PERC CO2 DRY	PERC CO DRY	PITOT TUBE COEF
40.0	29.35	0.00	83.0	0.00[a]	32.20[b]	.20	908.17	1.1	22.3	6.7	.850

PORT- POINT		SAMP TIME (MIN)	METER VOL (DCF)	DELTA P (I.H2O)	DELTA H (I.H2O)	TEMP IN (D.F)	TEMP OUT (D.F)	TRAIN VAC (I.HG)	STACK TEMP (D.F)	S.GEL TEMP (D.F)	PROBE T DIA (IN)	VEL (FPM)
1	1	5.00	909.38	.005	.250	51.0	54.0	5.0	360.0		.600	300.0
2	1	5.00	910.51	.003	.200	46.0	46.0	10.0	330.0		.600	250.0
4	1	5.00	911.59	.003	.200	42.0	43.0	4.0	220.0		.600	220.0
3	1	5.00	912.73	.003	.200	44.0	44.0	6.0	170.0		.600	220.0
5	1	5.00	913.88	.004	.150	40.0	40.0	10.0	230.0	50.0	.600	240.0
6	1	5.00	915.17	.004	.200	41.0	41.0	4.0	190.0		.600	250.0
7	1	5.00	916.16	.003	.150	45.0	42.0	10.0	310.0		.600	220.0

a/ Not detectable.
b/ x 10^{-3}.

DRAFT
DRAFT

DRAFT

TABLE D-16

BENZ[a]PYRENE EMISSION DATA

NAME	DESCRIPTION	UNITS	4	6	8
	DATE OF RUN		12-04-75	12-05-75	12-06-75
DN	PROBE TIP DIAMETER	IN	.600	.600	.600
TT	NET TIME OF RUN	MIN	40.0	40.0	35.0
PB	BAROMETRIC PRESSURE	IN.HG	29.31	29.25	29.65
PM	AVG ORIFICE PRES DROP	IN.H2O	.606	.412	.357
VM	VOL DRY GAS-METER COND	DCF	16.20	13.89	10.99
TM	AVG GAS METER TEMP	DEG.F	67.1	68.3	45.3
VMSTD	VOL DRY GAS-STD COND	DSCF	15.98	13.64	11.43
VW	TOTAL H2O COLLECTED	ML	134.4	154.8	96.1
VWV	VOL H2O VAPOR-STD COND	SCF	6.37	7.34	4.56
PMOS	PERCENT MOISTURE BY VOL		28.5	35.0	28.5
MD	MOLE FRACTION DRY GAS		.715	.650	.715
PCO2	PERCENT CO2 BY VOL, DRY		15.0	17.2	16.1
PO2	PERCENT O2 BY VOL, DRY		7.3	9.2	6.4
PCO	PERCENT CO BY VOL, DRY		2.9	4.1	1.5
PN2	PERCENT N2 BY VOL, DRY		74.8	69.5	76.0
MWD	MOLECULAR WT-DRY STK GAS		30.69	31.12	30.83
MW	MOLECULAR WT-STK GAS		27.07	26.53	27.18
CP	PITOT TUBE COEFFICIENT		.850	.850	.850
DPS	AVG STK VELOCITY HEAD	IN.H2O	.008	.006	.006
TS	AVG STACK TEMPERATURE	DEG.F	155.6	163.8	155.0
NP	NET SAMPLING POINTS		8	8	7
PST	STATIC PRES OF STACK	IN.HG	-0.00	-0.00	-0.00
PS	STACK PRESSURE, ABSOLUTE	IN.HG	29.31	29.25	29.65
VS	AVG STACK GAS VELOCITY	FPM	346	300	286
AS	STACK AREA	IN2	29	29	29
QS	STK FLOWRATE, DRY,STD CN	DSCFM	42	32	35
QA	ACTUAL STACK FLOWRATE	ACFM	69	60	57
PERI	PERCENT ISOKINETIC		97.1	106.8	95.0
MF	PARTICULATE WT-PARTIAL[a]	MG	3.40	3.20	0.00
MT	PARTICULATE WT-TOTAL[a]	MG	14.30	7.20	6.60
IC	PERC IMPINGER CATCH		76.22	55.56	100.00
CAN	PART. LOAD-PTL,STD CN[a]	GR/DSCF	.00328	.00361	0.00000
CAO	PART. LOAD-TTL,STD CN[a]	GR/DSCF	.01378	.00813	.00889
CAT	PART. LOAD-PTL,STK CN[a]	GR/ACF	.00198	.00195	0.00000
CAU	PART. LOAD-TTL,STK CN[a]	GR/ACF	.00831	.00439	.00543
CAW	PARTIC EMIS-PARTIAL[a]	LB/HR	.00117[b]	.00100[b]	0.00000
CAX	PARTIC EMIS-TOTAL[a]	LB/HR	.00493[b]	.00226[b]	.00266[c]
EA	PERCENT EXCESS AIR		42	64	39

a/ x 10^{-3}.

b/ Per stack; to obtain total for kiln, multiply by 8.

c/ Per stack; to obtain total for kiln, multiply by 7.

DRAFT

DRAFT

TABLE D-16 (Concluded)

NAME	DESCRIPTION	UNITS	10	12
	DATE OF RUN		12-07-75	12-08-75
DN	PROBE TIP DIAMETER	IN	.600	.600
TT	NET TIME OF RUN	MIN	40.0	35.0
PB	BAROMETRIC PRESSURE	IN.HG	29.65	29.35
PM	AVG ORIFICE PRES DROP	IN.H2O	.312	.193
VM	VOL DRY GAS-METER COND	DCF	11.98	7.99
TM	AVG GAS METER TEMP	DEG.F	44.3	44.2
VMSTD	VOL DRY GAS-STD COND	DSCF	12.49	8.24
VW	TOTAL H2O COLLECTED	ML	168.0	83.0
VWV	VOL H2O VAPOR-STD COND	SCF	7.96	3.93
PMOS	PERCENT MOISTURE BY VOL		38.9	32.3
MD	MOLE FRACTION DRY GAS		.611	.677
PCO2	PERCENT CO2 BY VOL, DRY		18.2	22.3
PO2	PERCENT O2 BY VOL, DRY		5.1	1.1
PCO	PERCENT CO BY VOL, DRY		5.5	6.7
PN2	PERCENT N2 BY VOL, DRY		71.2	69.9
MWD	MOLECULAR WT-DRY STK GAS		31.12	31.61
MW	MOLECULAR WT-STK GAS		26.01	27.21
CP	PITOT TUBE COEFFICIENT		.850	.850
DPS	AVG STK VELOCITY HEAD	IN.H2O	.005	.003
TS	AVG STACK TEMPERATURE	DEG.F	204.4	258.6
NP	NET SAMPLING POINTS		8	7
PST	STATIC PRES OF STACK	IN.HG	-0.00	-0.00
PS	STACK PRESSURE, ABSOLUTE	IN.HG	29.65	29.35
VS	AVG STACK GAS VELOCITY	FPM	294	243
AS	STACK AREA	IN2	29	29
QS	STK FLOWRATE, DRY,STD CN	DSCFM	28	24
QA	ACTUAL STACK FLOWRATE	ACFM	59	49
PERI	PERCENT ISOKINETIC		111.8	100.5
MF	PARTICULATE WT-PARTIAL[a/]	MG	0.00	0.00
MT	PARTICULATE WT-TOTAL[a/]	MG	16.80	32.20
IC	PERC IMPINGER CATCH		100.00	100.00
CAN	PART. LOAD-PTL,STD CN[a/]	GR/DSCF	0.00000	0.00000
CAO	PART. LOAD-TTL,STD CN[a/]	GR/DSCF	.02072	.06016
CAT	PART. LOAD-PTL,STK CN[a/]	GR/ACF	0.00000	0.00000
CAU	PART. LOAD-TTL,STK CN[a/]	GR/ACF	.01000	.02946
CAW	PARTIC EMIS-PARTIAL[a/]	LB/HR	0.00000	0.00000
CAX	PARTIC EMIS-TOTAL[a/]	LB/HR	.00504[b/]	.01227[c/]
EA	PERCENT EXCESS AIR		14	-11

a/ x 10^{-3}.

b/ Per stack; to obtain total for kiln, multiply by 8.

c/ Per stack; to obtain total for kiln, multiply by 7.

DRAFT

DRAFT

TABLE D-17

BENZ[a]PYRENE EMISSION DATA (METRIC RESULTS)

NAME	DESCRIPTION	UNITS	4	6	8
	DATE OF RUN		12-04-75	12-05-75	12-06-75
DN	PROBE TIP DIAMETER	IN	.600	.600	.600
TT	NET TIME OF RUN	MIN	40.0	40.0	35.0
PB	BAROMETRIC PRESSURE	IN.HG	29.31	29.25	29.65
PM	AVG ORIFICE PRES DROP	IN.H2O	.606	.412	.357
VM	VOL DRY GAS-METER COND	DCF	16.20	13.89	10.99
TM	AVG GAS METER TEMP	DEG.F	67.1	68.3	45.3
VMSTM	VOL DRY GAS-STD COND	NCM	.45	.39	.32
VW	TOTAL H2O COLLECTED	ML	134.4	154.8	96.1
VWM	VOL H2O VAPOR-STD COND	NM3	.18	.21	.13
PMOS	PERCENT MOISTURE BY VOL		28.5	35.0	28.5
MD	MOLE FRACTION DRY GAS		.715	.650	.715
PCO2	PERCENT CO2 BY VOL, DRY		15.0	17.2	16.1
PO2	PERCENT O2 BY VOL, DRY		7.3	9.2	6.4
PCO	PERCENT CO BY VOL, DRY		2.9	4.1	1.5
PN2	PERCENT N2 BY VOL, DRY		74.8	69.5	76.0
MWD	MOLECULAR WT-DRY STK GAS		30.69	31.12	30.83
MW	MOLECULAR WT-STK GAS		27.07	26.53	27.18
CP	PITOT TUBE COEFFICIENT		.850	.850	.850
DPS	AVG STK VELOCITY HEAD	IN.H2O	.008	.006	.006
TSM	AVG STACK TEMPERATURE	DEG.C	68.7	73.2	68.3
NP	NET SAMPLING POINTS		8	8	7
PST	STATIC PRES OF STACK	IN.HG	-0.00	-0.00	-0.00
PS	STACK PRESSURE, ABSOLUTE	IN.HG	29.31	29.25	29.65
VSM	AVG STACK GAS VELOCITY	M/MIN	105.6	91.5	87.1
AS	STACK AREA	IN2	29	29	29
QSM	STK FLOWRATE, DRY,STD CN	NM3/MIN	1.2	.9	1.0
QAM	ACTUAL STACK FLOWRATE	M3/MIN	2.0	1.7	1.6
PERI	PERCENT ISOKINETIC		97.1	106.8	95.0
MF	PARTICULATE WT-PARTIAL a/	MG	3.40	3.20	0.00
MT	PARTICULATE WT-TOTAL a/	MG	14.30	7.20	6.60
IC	PERC IMPINGER CATCH		76.22	55.56	100.00
CANM	PART. LOAD-PTL,STD CN a/	MG/NM3	7.50	8.27	0.00
CAOM	PART. LOAD-TTL,STD CN a/	MG/NM3	31.53	18.61	20.34
CATM	PART. LOAD-PTL,STK CN a/	MG/M3	4.52	4.47	0.00
CAUM	PART. LOAD-TTL,STK CN a/	MG/M3	19.01	10.05	12.42
CAWM	PARTIC EMIS-PARTIAL a/	KG/HR	.00053 b/	.00046 b/	0.00000
CAXM	PARTIC EMIS-TOTAL a/	KG/HR	.00224 b/	.00102 b/	.00121 c/
EA	PERCENT EXCESS AIR		42	64	39

a/ x 10^{-3}.

b/ Per stack; to obtain total for kiln, multiply by 8.

c/ Per stack; to obtain total for kiln, multiply by 7.

DRAFT

DRAFT

TABLE D-17 (Concluded)

NAME	DESCRIPTION	UNITS	10	12
	DATE OF RUN		12-07-75	12-08-75
DN	PROBE TIP DIAMETER	IN	.600	.600
TT	NET TIME OF RUN	MIN	40.0	35.0
PB	BAROMETRIC PRESSURE	IN.HG	29.65	29.35
PM	AVG ORIFICE PRES DROP	IN.H2O	.312	.193
VM	VOL DRY GAS-METER COND	DCF	11.98	7.99
TM	AVG GAS METER TEMP	DEG.F	44.3	44.2
VMSTM	VOL DRY GAS-STD COND	NCM	.35	.23
VW	TOTAL H2O COLLECTED	ML	168.0	83.0
VWM	VOL H2O VAPOR-STD COND	NM3	.23	.11
PMOS	PERCENT MOISTURE BY VOL		38.9	32.3
MD	MOLE FRACTION DRY GAS		.611	.677
PCO2	PERCENT CO2 BY VOL, DRY		18.2	22.3
PO2	PERCENT O2 BY VOL, DRY		5.1	1.1
PCO	PERCENT CO BY VOL, DRY		5.5	6.7
PN2	PERCENT N2 BY VOL, DRY		71.2	69.9
MWD	MOLECULAR WT-DRY STK GAS		31.12	31.61
MW	MOLECULAR WT-STK GAS		26.01	27.21
CP	PITOT TUBE COEFFICIENT		.850	.850
DPS	AVG STK VELOCITY HEAD	IN.H2O	.005	.003
TSM	AVG STACK TEMPERATURE	DEG.C	95.8	125.9
NP	NET SAMPLING POINTS		8	7
PST	STATIC PRES OF STACK	IN.HG	-0.00	-0.00
PS	STACK PRESSURE, ABSOLUTE	IN.HG	29.65	29.35
VSM	AVG STACK GAS VELOCITY	M/MIN	89.6	74.0
AS	STACK AREA	IN2	29	29
QSM	STK FLOWRATE, DRY,STD CN	NM3/MIN	.8	.7
QAM	ACTUAL STACK FLOWRATE	M3/MIN	1.7	1.4
PERI	PERCENT ISOKINETIC		111.8	100.5
MF	PARTICULATE WT-PARTIAL a/	MG	0.00	0.00
MT	PARTICULATE WT-TOTAL a/	MG	16.80	32.20
IC	PERC IMPINGER CATCH		100.00	100.00
CANM	PART. LOAD-PTL,STD CN a/	MG/NM3	0.00	0.00
CAOM	PART. LOAD-TTL,STD CN a/	MG/NM3	47.42	137.67
CATM	PART. LOAD-PTL,STK CN a/	MG/M3	0.00	0.00
CAUM	PART. LOAD-TTL,STK CN a/	MG/M3	22.89	67.42
CAWM	PARTIC EMIS-PARTIAL a/	KG/HR	0.00000	0.00000
CAXM	PARTIC EMIS-TOTAL a/	KG/HR	.00228 b/	.00556 c/
EA	PERCENT EXCESS AIR		14	-11

a/ x 10^{-3}.

b/ Per stack; to obtain total for kiln, multiply by 8.

c/ Per stack; to obtain total for kiln, multiply by 7.

DRAFT

TABLE D-18

SUMMARY OF RESULTS (BENZ[a]PYRENE)

NAME	DESCRIPTION	UNITS	4	6	8
	DATE OF RUN		12-04-75	12-05-75	12-06-75
VMSTD	VOL DRY GAS-STD COND	DSCF	15.98	13.64	11.43
PMOS	PERCENT MOISTURE BY VOL		28.5	35.0	28.5
TS	AVG STACK TEMPERATURE	DEG.F	155.6	163.8	155.0
QS	STK FLOWRATE, DRY,STD CN	DSCFM	42	32	35
QA	ACTUAL STACK FLOWRATE	ACFM	69	60	57
PERI	PERCENT ISOKINETIC		97.1	106.8	95.0
PARTICULATES -- PARTIAL CATCH					
MF	PARTICULATE WT-PARTIAL[a]	MG	3.40	3.20	0.00
CAN	PART. LOAD-PTL,STD CN[a]	GR/DSCF	.00328	.00361	0.00000
CAT	PART. LOAD-PTL,STK CN[a]	GR/ACF	.00198	.00195	0.00000
CAW	PARTIC EMIS-PARTIAL[a]	LB/HR	.00117[b]	.00100[b]	0.00000
PARTICULATES -- TOTAL CATCH					
MT	PARTICULATE WT-TOTAL[a]	MG	14.30	7.20	6.60
CAO	PART. LOAD-TTL,STD CN[a]	GR/DSCF	.01378	.00813	.00889
CAU	PART. LOAD-TTL,STK CN[a]	GR/ACF	.00831	.00439	.00543
CAX	PARTIC EMIS-TOTAL[a]	LB/HR	.00493[b]	.00226[b]	.00266[c]
IC	PERC IMPINGER CATCH		76.22	55.56	100.00

a/ x 10^{-3}.

b/ Per stack; to obtain total for kiln, multiply by 8.

c/ Per stack; to obtain total for kiln, multiply by 7.

DRAFT

DRAFT

TABLE D-18 (Concluded)

NAME	DESCRIPTION	UNITS	10	12
	DATE OF RUN		12-07-75	12-08-75
VMSTD	VOL DRY GAS-STD COND	DSCF	12.49	8.24
PMOS	PERCENT MOISTURE BY VOL		38.9	32.3
TS	AVG STACK TEMPERATURE	DEG.F	204.4	258.6
QS	STK FLOWRATE, DRY,STD CN	DSCFM	28	24
QA	ACTUAL STACK FLOWRATE	ACFM	59	49
PERI	PERCENT ISOKINETIC		111.8	100.5
PARTICULATES -- PARTIAL CATCH				
MF	PARTICULATE WT-PARTIAL	MG	0.00	0.00
CAN	PART. LOAD-PTL,STD CN	GR/DSCF	0.00000	0.00000
CAT	PART. LOAD-PTL,STK CN	GR/ACF	0.00000	0.00000
CAW	PARTIC EMIS-PARTIAL	LB/HR	0.00000	0.00000
PARTICULATES -- TOTAL CATCH				
MT	PARTICULATE WT-TOTAL a/	MG	16.80	32.20
CAO	PART. LOAD-TTL,STD CN a/	GR/DSCF	.02072	.06016
CAU	PART. LOAD-TTL,STK CN a/	GR/ACF	.01000	.02946
CAX	PARTIC EMIS-TOTAL a/	LB/HR	.00504 b/	.01227 c/
IC	PERC IMPINGER CATCH		100.00	100.00

a/ x 10^{-3}.

b/ Per stack; to obtain total for kiln, multiply by 8.

c/ Per stack; to obtain total for kiln, multiply by 7.

DRAFT

DRAFT

TABLE D-19

SUMMARY OF RESULTS--METRIC UNITS (BENZ[a]PYRENE)

NAME	DESCRIPTION	UNITS	4	6	8
	DATE OF RUN		12-04-75	12-05-75	12-06-75
VMSTM	VOL DRY GAS-STD COND	NCM	.453	.386	.324
PMOS	PERCENT MOISTURE BY VOL		28.5	35.0	28.5
TSM	AVG STACK TEMPERATURE	DEG.C	68.7	73.2	68.3
QSM	STK FLOWRATE, DRY,STD CN	NM3/MIN	1.2	.9	1.0
QAM	ACTUAL STACK FLOWRATE	M3/MIN	2.0	1.7	1.6
PERI	PERCENT ISOKINETIC		97.1	106.8	95.0
EA	PERCENT EXCESS AIR		42	64	39
PARTICULATES -- PARTIAL CATCH					
MF	PARTICULATE WT-PARTIAL[a]	MG	3.40	3.20	0.00
CANM	PART. LOAD-PTL,STD CN[a]	MG/NM3	7.50	8.27	0.00
CATM	PART. LOAD-PTL,STK CN[a]	MG/M3	4.52	4.47	0.00
CAWM	PARTIC EMIS-PARTIAL[a]	KG/HR	.00053[b]	.00046[b]	0.00000
PARTICULATES -- TOTAL CATCH					
MT	PARTICULATE WT-TOTAL[a]	MG	14.30	7.20	6.60
CAOM	PART. LOAD-TTL,STD CN[a]	MG/NM3	31.53	18.61	20.34
CAUM	PART. LOAD-TTL,STK CN[a]	MG/M3	19.01	10.05	12.42
CAXM	PARTIC EMIS-TOTAL[a]	KG/HR	.00224[b]	.00102[b]	.00121[c]
IC	PERC IMPINGER CATCH		76.22	55.56	100.00

a/ x 10^{-3}.

b/ Per stack; to obtain total for kiln, multiply by 8.

c/ Per stack; to obtain total for kiln, multiply by 7.

DRAFT

DRAFT

TABLE D-19 (Concluded)

NAME	DESCRIPTION	UNITS	10	12
	DATE OF RUN		12-07-75	12-08-75
VMSTM	VOL DRY GAS-STD COND	NCM	.354	.233
PMOS	PERCENT MOISTURE BY VOL		38.9	32.3
TSM	AVG STACK TEMPERATURE	DEG.C	95.8	125.9
QSM	STK FLOWRATE, DRY,STD CN	NM3/MIN	.8	.7
QAM	ACTUAL STACK FLOWRATE	M3/MIN	1.7	1.4
PERI	PERCENT ISOKINETIC		111.8	100.5
EA	PERCENT EXCESS AIR		14	-11
PARTICULATES -- PARTIAL CATCH				
MF	PARTICULATE WT-PARTIAL	MG	0.00	0.00
CANM	PART. LOAD-PTL,STD CN	MG/NM3	0.00	0.00
CATM	PART. LOAD-PTL,STK CN	MG/M3	0.00	0.00
CAWM	PARTIC EMIS-PARTIAL	KG/HR	0.00000	0.00000
PARTICULATES -- TOTAL CATCH				
MT	PARTICULATE WT-TOTAL a/	MG	16.80	32.20
CAOM	PART. LOAD-TTL,STD CN a/	MG/NM3	47.42	137.67
CAUM	PART. LOAD-TTL,STK CN a/	MG/M3	22.89	67.42
CAXM	PARTIC EMIS-TOTAL a/	KG/HR	.00228 b/	.00556 c/
IC	PERC IMPINGER CATCH		100.00	100.00

a/ x 10^{-3}.

b/ Per stack; to obtain total for kiln, multiply by 8.

c/ Per stack; to obtain total for kiln, multiply by 7.

DRAFT

DRAFT

TABLE D-20

POM-LIKE MATERIAL DATA AND CALCULATED VALUES

RUN- 2 DATE- 12-03-75

ATMOS TEMP (DG.F)	ATMOS PRES (I.HG)	STACK VAC (I.H2O)	H2O COND (ML)	PARTIC WT-PTL (MG)	PARTIC WT-TTL (MG)	STACK AREA (FT2)	INIT VOL (DCF)	PERC O2 DRY	PERC CO2 DRY	PERC CO DRY	PITOT TUBE COEF
40.0	29.31	0.00	109.8	345.00[a]	376.00[a]	.20	837.66	9.2	11.0	1.9	.850

PORT- POINT		SAMP TIME (MIN)	METER VOL (DCF)	DELTA P (I.H2O)	DELTA H (I.H2O)	TEMP IN (D.F)	TEMP OUT (D.F)	TRAIN VAC (I.HG)	STACK TEMP (D.F)	S.GEL TEMP (D.F)	PROBE T DIA (IN)	VEL (FPM)
1	1	5.00	838.98	.005	.270	43.0	43.0	8.5	140.0		.600	260.0
2	1	5.00	840.69	.006	.400	49.0	49.0	5.0	145.0		.600	300.0
4	1	5.00	842.82	.009	.650	53.0	53.0	5.0	130.0		.600	350.0
3	1	5.00	845.03	.009	.700	58.0	60.0	6.0	140.0		.600	350.0
5	1	5.00	847.27	.011	.700	62.0	62.0	9.0	160.0		.600	400.0
6	1	5.00	849.49	.011	.650	64.0	64.0	7.0	155.0		.600	400.0
7	1	5.00	851.22	.004	.450	65.0	66.0	12.0	165.0		.600	250.0
8	1	5.00	853.23	.008	.550	65.0	65.0	12.0	165.0		.600	350.0

a/ x 10^{-3}.

DRAFT

DRAFT

TABLE D-21

POM-LIKE MATERIAL DATA AND CALCULATED VALUES

RUN- 4 DATE- 12-04-75

ATMOS TEMP (DG.F)	ATMOS PRES (I.HG)	STACK VAC (I.H2O)	H2O COND (ML)	PARTIC WT-PTL (MG)	PARTIC WT-TTL (MG)	STACK AREA (FT2)	INIT VOL (DCF)	PERC O2 DRY	PERC CO2 DRY	PERC CO DRY	PITOT TUBE COEF
50.0	29.31	0.00	134.4	143.00[a]	213.00[a]	.20	853.51	7.3	15.0	2.9	.850

PORT-POINT		SAMP TIME (MIN)	METER VOL (DCF)	DELTA P (I.H2O)	DELTA H (I.H2O)	TEMP IN (D.F)	TEMP OUT (D.F)	TRAIN VAC (I.HG)	STACK TEMP (D.F)	S.GEL TEMP (D.F)	PROBE T DIA (IN)	VEL (FPM)
1	1	5.00	854.97	.004	.500	64.0	66.0	5.0	150.0		.600	250.0
2	1	5.00	857.01	.008	.600	58.0	60.0	7.5	145.0		.600	350.0
4	1	5.00	859.01	.008	.550	61.0	61.0	5.5	160.0		.600	350.0
3	1	5.00	860.85	.007	.500	64.0	64.0	5.0	160.0		.600	320.0
5	1	5.00	863.15	.011	.700	68.0	68.0	12.0	165.0		.600	400.0
6	1	5.00	865.45	.011	.700	72.0	72.0	9.0	150.0		.600	400.0
7	1	5.00	867.35	.006	.600	73.0	73.0	5.0	160.0		.600	300.0
8	1	5.00	869.71	.011	.700	75.0	75.0	13.0	155.0		.600	400.0

a/ x 10^{-3}.

DRAFT
DRAFT

TABLE D-22

POM-LIKE MATERIAL DATA AND CALCULATED VALUES

RUN- 6 DATE- 12-05-75

ATMOS TEMP (DG.F)	ATMOS PRES (I.HG)	STACK VAC (I.H2O)	H2O COND (ML)	PARTIC WT-PTL (MG)	PARTIC WT-TTL (MG)	STACK AREA (FT2)	INIT VOL (DCF)	PERC O2 DRY	PERC CO2 DRY	PERC CO DRY	PITOT TUBE COEF
50.0	29.25	-0.00	154.8	69.00[a]	105.00[a]	.20	869.81	9.2	17.2	4.1	.850

PORT-POINT		SAMP TIME (MIN)	METER VOL (DCF)	DELTA P (I.H2O)	DELTA H (I.H2O)	TEMP IN (D.F)	TEMP OUT (D.F)	TRAIN VAC (I.HG)	STACK TEMP (D.F)	S.GEL TEMP (D.F)	PROBE T DIA (IN)	VEL (FPM)
1	1	5.00	871.25	.004	.300	68.0	70.0	5.0	155.0	70.0	.600	250.0
2	1	5.00	872.97	.006	.350	67.0	67.0	5.0	155.0		.600	300.0
4	1	5.00	874.84	.006	.450	67.0	67.0	5.0	150.0		.600	300.0
3	1	5.00	876.42	.004	.300	69.0	69.0	5.0	160.0		.600	250.0
5	1	5.00	878.15	.006	.400	66.0	67.0	7.0	160.0		.600	300.0
6	1	5.00	879.83	.006	.400	68.0	68.0	8.0	165.0		.600	300.0
7	1	5.00	882.05	.010	.700	70.0	70.0	10.5	180.0		.600	400.0
8	1	5.00	883.70	.006	.400	70.0	70.0	7.0	185.0		.600	300.0

a/ x 10^{-3}.

DRAFT

DRAFT

TABLE D-23

POM-LIKE MATERIAL DATA AND CALCULATED VALUES

RUN- 8 DATE- 12-06-75

ATMOS TEMP (DG.F)	ATMOS PRES (I.HG)	STACK VAC (I.H2O)	H2O COND (ML)	PARTIC WT-PTL (MG)	PARTIC WT-TTL (MG)	STACK AREA (FT2)	INIT VOL (DCF)	PERC O2 DRY	PERC CO2 DRY	PERC CO DRY	PITOT TUBE COEF
40.0	29.65	0.00	96.1	0.00a/	191.00b/	.20	883.70	6.4	16.1	1.5	.850

PORT-POINT		SAMP TIME (MIN)	METER VOL (DCF)	DELTA P (I.H2O)	DELTA H (I.H2O)	TEMP IN (D.F)	TEMP OUT (D.F)	TRAIN VAC (I.HG)	STACK TEMP (D.F)	S.GEL TEMP (D.F)	PROBE T DIA (IN)	VEL (FPM)
4	1	5.00	885.07	.004	.250	44.0	46.0	4.0	150.0		.600	250.0
3	1	5.00	886.77	.006	.400	42.0	42.0	4.0	140.0		.600	300.0
5	1	5.00	888.41	.006	.400	43.0	43.0	4.0	155.0		.600	300.0
6	1	5.00	889.80	.004	.250	44.0	44.0	6.0	145.0	70.0	.600	250.0
7	1	5.00	891.43	.006	.400	44.0	44.0	5.0	160.0		.600	300.0
8	1	5.00	893.04	.006	.400	49.0	49.0	9.0	175.0		.600	300.0
1	1	5.00	894.69	.006	.400	50.0	50.0	9.0	160.0		.600	300.0

a/ Not detectable.
b/ x 10^{-3}.

DRAFT
DRAFT

TABLE D-24

POM-LIKE MATERIAL DATA AND CALCULATED VALUES

RUN- 10 DATE- 12-07-75

ATMOS TEMP (DG.F)	ATMOS PRES (I.HG)	STACK VAC (I.H2O)	H2O COND (ML)	PARTIC WT-PTL (MG)	PARTIC WT-TTL (MG)	STACK AREA (FT2)	INIT VOL (DCF)	PERC O2 DRY	PERC CO2 DRY	PERC CO DRY	PITOT TUBE COEF
40.0	29.65	0.00	168.0	160.00[a]	416.00[a]	.20	894.80	5.1	18.2	5.5	.850

PORT-POINT		SAMP TIME (MIN)	METER VOL (DCF)	DELTA P (I.H2O)	DELTA H (I.H2O)	TEMP IN (D.F)	TEMP OUT (D.F)	TRAIN VAC (I.HG)	STACK TEMP (D.F)	S.GEL TEMP (D.F)	PROBE T DIA (IN)	VEL (FPM)
1	1	5.00	896.12	.004	.250	42.0	45.0	5.0	180.0		.600	250.0
4	1	5.00	898.14	.010	.650	41.0	41.0	11.0	205.0		.600	400.0
3	1	5.00	899.48	.004	.250	41.0	41.0	7.0	165.0	50.0	.600	250.0
5	1	5.00	901.06	.006	.300	42.0	42.0	7.0	175.0	60.0	.600	300.0
6	1	5.00	902.40	.004	.250	44.0	44.0	7.0	175.0		.600	250.0
7	1	5.00	903.95	.006	.300	46.0	46.0	8.0	185.0		.600	300.0
8	1	5.00	905.49	.005	.300	48.0	48.0	8.0	215.0	70.0	.600	300.0
2	1	5.00	906.78	.005	.200	49.0	49.0	8.0	335.0		.600	300.0

[a] $\times 10^3$.

DRAFT

DRAFT

TABLE D-25

POM-LIKE MATERIAL DATA AND CALCULATED VALUES

RUN- 12 DATE- 12-08-75

ATMOS TEMP (DG.F)	ATMOS PRES (I.HG)	STACK VAC (I.H2O)	H2O COND (ML)	PARTIC WT-PTL (MG)	PARTIC WT-TTL (MG)	STACK AREA (FT2)	INIT VOL (DCF)	PERC O2 DRY	PERC CO2 DRY	PERC CO DRY	PITOT TUBE COEF
40.0	29.35	0.00	83.0	448.00[a]	795.00[a]	.20	908.17	1.1	22.3	6.7	.850

PORT-POINT		SAMP TIME (MIN)	METER VOL (DCF)	DELTA P (I.H2O)	DELTA H (I.H2O)	TEMP IN (D.F)	TEMP OUT (D.F)	TRAIN VAC (I.HG)	STACK TEMP (D.F)	S.GEL TEMP (D.F)	PROBE T DIA (IN)	VEL (FPM)
1	1	5.00	909.38	.005	.250	51.0	54.0	5.0	360.0		.600	300.0
2	1	5.00	910.51	.003	.200	46.0	46.0	10.0	330.0		.600	250.0
4	1	5.00	911.59	.003	.200	42.0	43.0	4.0	220.0		.600	220.0
3	1	5.00	912.73	.003	.200	44.0	44.0	6.0	170.0		.600	220.0
5	1	5.00	913.88	.004	.150	40.0	40.0	10.0	230.0	50.0	.600	240.0
6	1	5.00	915.17	.004	.200	41.0	41.0	4.0	190.0		.600	250.0
7	1	5.00	916.16	.003	.150	45.0	42.0	10.0	310.0		.600	220.0

a/ x 10^{-3}.

DRAFT
DRAFT

DRAFT

TABLE D-26

POM-LIKE MATERIAL EMISSION DATA

NAME	DESCRIPTION	UNITS	2	4	6
	DATE OF RUN		12-03-75	12-04-75	12-05-75
DN	PROBE TIP DIAMETER	IN	.600	.600	.600
TT	NET TIME OF RUN	MIN	40.0	40.0	40.0
PB	BAROMETRIC PRESSURE	IN.HG	29.31	29.31	29.25
PM	AVG ORIFICE PRES DROP	IN.H2O	.546	.606	.412
VM	VOL DRY GAS-METER COND	DCF	15.57	16.20	13.89
TM	AVG GAS METER TEMP	DEG.F	57.6	67.1	68.3
VMSTD	VOL DRY GAS-STD COND	DSCF	15.64	15.98	13.64
VW	TOTAL H2O COLLECTED	ML	109.8	134.4	154.8
VWV	VOL H2O VAPOR-STD COND	SCF	5.20	6.37	7.34
PMOS	PERCENT MOISTURE BY VOL		25.0	28.5	35.0
MD	MOLE FRACTION DRY GAS		.750	.715	.650
PCO2	PERCENT CO2 BY VOL, DRY		11.0	15.0	17.2
PO2	PERCENT O2 BY VOL, DRY		9.2	7.3	9.2
PCO	PERCENT CO BY VOL, DRY		1.9	2.9	4.1
PN2	PERCENT N2 BY VOL, DRY		77.9	74.8	69.5
MWD	MOLECULAR WT-DRY STK GAS		30.13	30.69	31.12
MW	MOLECULAR WT-STK GAS		27.10	27.07	26.53
CP	PITOT TUBE COEFFICIENT		.850	.850	.850
DPS	AVG STK VELOCITY HEAD	IN.H2O	.008	.008	.006
TS	AVG STACK TEMPERATURE	DEG.F	150.0	155.6	163.8
NP	NET SAMPLING POINTS		8	8	8
PST	STATIC PRES OF STACK	IN.HG	-0.00	-0.00	-0.00
PS	STACK PRESSURE, ABSOLUTE	IN.HG	29.31	29.31	29.25
VS	AVG STACK GAS VELOCITY	FPM	333	346	300
AS	STACK AREA	IN2	29	29	29
QS	STK FLOWRATE, DRY,STD CN	DSCFM	42	42	32
QA	ACTUAL STACK FLOWRATE	ACFM	67	69	60
PERI	PERCENT ISOKINETIC		93.5	97.1	106.8
MF	PARTICULATE WT-PARTIAL a/	MG	345.00	143.00	69.00
MT	PARTICULATE WT-TOTAL a/	MG	376.00	213.00	105.00
IC	PERC IMPINGER CATCH		8.24	32.86	34.29
CAN	PART. LOAD-PTL,STD CN a/	GR/DSCF	.33970	.13781	.07792
CAO	PART. LOAD-TTL,STD CN a/	GR/DSCF	.37022	.20526	.11858
CAT	PART. LOAD-PTL,STK CN a/	GR/ACF	.21694	.08309	.04208
CAU	PART. LOAD-TTL,STK CN a/	GR/ACF	.23643	.12377	.06404
CAW	PARTIC EMIS-PARTIAL a/	LB/HR	.12366 b/	.04932 b/	.02164 b/
CAX	PARTIC EMIS-TOTAL a/	LB/HR	.13477 b/	.07347 b/	.03294 b/
EA	PERCENT EXCESS AIR		67	42	64

a/ x 10^{-3}.

b/ Per stack; to obtain total for kiln, multiply by 8.

DRAFT

DRAFT

TABLE D-26 (Concluded)

NAME	DESCRIPTION	UNITS	8	10	12
	DATE OF RUN		12-06-75	12-07-75	12-08-75
DN	PROBE TIP DIAMETER	IN	.600	.600	.600
TT	NET TIME OF RUN	MIN	35.0	40.0	35.0
PB	BAROMETRIC PRESSURE	IN.HG	29.65	29.65	29.35
PM	AVG ORIFICE PRES DROP	IN.H2O	.357	.312	.193
VM	VOL DRY GAS-METER COND	DCF	10.99	11.98	7.99
TM	AVG GAS METER TEMP	DEG.F	45.3	44.3	44.2
VMSTD	VOL DRY GAS-STD COND	DSCF	11.43	12.49	8.24
VW	TOTAL H2O COLLECTED	ML	96.1	168.0	83.0
VWV	VOL H2O VAPOR-STD COND	SCF	4.56	7.96	3.93
PMOS	PERCENT MOISTURE BY VOL		28.5	38.9	32.3
MD	MOLE FRACTION DRY GAS		.715	.611	.677
PCO2	PERCENT CO2 BY VOL, DRY		16.1	18.2	22.3
PO2	PERCENT O2 BY VOL, DRY		6.4	5.1	1.1
PCO	PERCENT CO BY VOL, DRY		1.5	5.5	6.7
PN2	PERCENT N2 BY VOL, DRY		76.0	71.2	69.9
MWD	MOLECULAR WT-DRY STK GAS		30.83	31.12	31.61
MW	MOLECULAR WT-STK GAS		27.18	26.01	27.21
CP	PITOT TUBE COEFFICIENT		.850	.850	.850
DPS	AVG STK VELOCITY HEAD	IN.H2O	.006	.005	.003
TS	AVG STACK TEMPERATURE	DEG.F	155.0	204.4	258.6
NP	NET SAMPLING POINTS		7	8	7
PST	STATIC PRES OF STACK	IN.HG	-0.00	-0.00	-0.00
PS	STACK PRESSURE, ABSOLUTE	IN.HG	29.65	29.65	29.35
VS	AVG STACK GAS VELOCITY	FPM	286	294	243
AS	STACK AREA	IN2	29	29	29
QS	STK FLOWRATE, DRY,STD CN	DSCFM	35	28	24
QA	ACTUAL STACK FLOWRATE	ACFM	57	59	49
PERI	PERCENT ISOKINETIC		95.0	111.8	100.5
MF	PARTICULATE WT-PARTIAL[a]	MG	0.00	160.00	448.00
MT	PARTICULATE WT-TOTAL[a]	MG	191.00	416.00	795.00
IC	PERC IMPINGER CATCH		100.00	61.54	43.65
CAN	PART. LOAD-PTL,STD CN[a]	GR/DSCF	0.00000	.19734	.83702
CAO	PART. LOAD-TTL,STD CN[a]	GR/DSCF	.25726	.51308	1.48533
CAT	PART. LOAD-PTL,STK CN[a]	GR/ACF	0.00000	.09525	.40994
CAU	PART. LOAD-TTL,STK CN[a]	GR/ACF	.15711	.24766	.72746
CAW	PARTIC EMIS-PARTIAL[a]	LB/HR	0.00000	.04797[c]	.17067[b]
CAX	PARTIC EMIS-TOTAL[a]	LB/HR	.07695[b]	.12472[c]	.30286[b]
EA	PERCENT EXCESS AIR		39	14	-11

a/ x 10^{-3}.

b/ Per stack; to obtain total for kiln, multiply by 7.

c/ Per stack; to obtain total for kiln, multiply by 8.

DRAFT

DRAFT

TABLE D-27

POM-LIKE MATERIAL EMISSION DATA (METRIC RESULTS)

NAME	DESCRIPTION	UNITS	2	4	6
	DATE OF RUN		12-03-75	12-04-75	12-05-75
DN	PROBE TIP DIAMETER	IN	.600	.600	.600
TT	NET TIME OF RUN	MIN	40.0	40.0	40.0
PB	BAROMETRIC PRESSURE	IN.HG	29.31	29.31	29.25
PM	AVG ORIFICE PRES DROP	IN.H2O	.546	.606	.412
VM	VOL DRY GAS-METER COND	DCF	15.57	16.20	13.89
TM	AVG GAS METER TEMP	DEG.F	57.6	67.1	68.3
VMSTM	VOL DRY GAS-STD COND	NCM	.44	.45	.39
VW	TOTAL H2O COLLECTED	ML	109.8	134.4	154.8
VWM	VOL H2O VAPOR-STD COND	NM3	.15	.18	.21
PMOS	PERCENT MOISTURE BY VOL		25.0	28.5	35.0
MD	MOLE FRACTION DRY GAS		.750	.715	.650
PCO2	PERCENT CO2 BY VOL, DRY		11.0	15.0	17.2
PO2	PERCENT O2 BY VOL, DRY		9.2	7.3	9.2
PCO	PERCENT CO BY VOL, DRY		1.9	2.9	4.1
PN2	PERCENT N2 BY VOL, DRY		77.9	74.8	69.5
MWD	MOLECULAR WT-DRY STK GAS		30.13	30.69	31.12
MW	MOLECULAR WT-STK GAS		27.10	27.07	26.53
CP	PITOT TUBE COEFFICIENT		.850	.850	.850
DPS	AVG STK VELOCITY HEAD	IN.H2O	.008	.008	.006
TSM	AVG STACK TEMPERATURE	DEG.C	65.5	68.7	73.2
NP	NET SAMPLING POINTS		8	8	8
PST	STATIC PRES OF STACK	IN.HG	-0.00	-0.00	-0.00
PS	STACK PRESSURE, ABSOLUTE	IN.HG	29.31	29.31	29.25
VSM	AVG STACK GAS VELOCITY	M/MIN	101.4	105.6	91.5
AS	STACK AREA	IN2	29	29	29
QSM	STK FLOWRATE, DRY,STD CN	NM3/MIN	1.2	1.2	.9
QAM	ACTUAL STACK FLOWRATE	M3/MIN	1.9	2.0	1.7
PERI	PERCENT ISOKINETIC		93.5	97.1	106.8
MF	PARTICULATE WT-PARTIAL a/	MG	345.00	143.00	69.00
MT	PARTICULATE WT-TOTAL a/	MG	376.00	213.00	105.00
IC	PERC IMPINGER CATCH		8.24	32.86	34.29
CANM	PART. LOAD-PTL,STD CN a/	MG/NM3	777.34	315.34	178.32
CAOM	PART. LOAD-TTL,STD CN a/	MG/NM3	847.19	469.71	271.35
CATM	PART. LOAD-PTL,STK CN a/	MG/M3	496.43	190.15	96.30
CAUM	PART. LOAD-TTL,STK CN a/	MG/M3	541.04	283.23	146.55
CAWM	PARTIC EMIS-PARTIAL a/	KG/HR	.05609 b/	.02237 b/	.00982 b/
CAXM	PARTIC EMIS-TOTAL a/	KG/HR	.06113 b/	.03332 b/	.01494 b/
EA	PERCENT EXCESS AIR		67	42	64

a/ x 10^{-3}.

b/ Per stack; to obtain total for kiln, multiply by 8.

DRAFT

DRAFT

TABLE D-27 (Concluded)

NAME	DESCRIPTION	UNITS	8	10	12
	DATE OF RUN		12-06-75	12-07-75	12-08-75
DN	PROBE TIP DIAMETER	IN	.600	.600	.600
TT	NET TIME OF RUN	MIN	35.0	40.0	35.0
PB	BAROMETRIC PRESSURE	IN.HG	29.65	29.65	29.35
PM	AVG ORIFICE PRES DROP	IN.H2O	.357	.312	.193
VM	VOL DRY GAS-METER COND	DCF	10.99	11.98	7.99
TM	AVG GAS METER TEMP	DEG.F	45.3	44.3	44.2
VMSTM	VOL DRY GAS-STD COND	NCM	.32	.35	.23
VW	TOTAL H2O COLLECTED	ML	96.1	168.0	83.0
VWM	VOL H2O VAPOR-STD COND	NM3	.13	.23	.11
PMOS	PERCENT MOISTURE BY VOL		28.5	38.9	32.3
MD	MOLE FRACTION DRY GAS		.715	.611	.677
PCO2	PERCENT CO2 BY VOL, DRY		16.1	18.2	22.3
PO2	PERCENT O2 BY VOL, DRY		6.4	5.1	1.1
PCO	PERCENT CO BY VOL, DRY		1.5	5.5	6.7
PN2	PERCENT N2 BY VOL, DRY		76.0	71.2	69.9
MWD	MOLECULAR WT-DRY STK GAS		30.83	31.12	31.61
MW	MOLECULAR WT-STK GAS		27.18	26.01	27.21
CP	PITOT TUBE COEFFICIENT		.850	.850	.850
DPS	AVG STK VELOCITY HEAD	IN.H2O	.006	.005	.003
TSM	AVG STACK TEMPERATURE	DEG.C	68.3	95.8	125.9
NP	NET SAMPLING POINTS		7	8	7
PST	STATIC PRES OF STACK	IN.HG	-0.00	-0.00	-0.00
PS	STACK PRESSURE, ABSOLUTE	IN.HG	29.65	29.65	29.35
VSM	AVG STACK GAS VELOCITY	M/MIN	87.1	89.6	74.0
AS	STACK AREA	IN2	29	29	29
QSM	STK FLOWRATE, DRY,STD CN	NM3/MIN	1.0	.8	.7
QAM	ACTUAL STACK FLOWRATE	M3/MIN	1.6	1.7	1.4
PERI	PERCENT ISOKINETIC		95.0	111.8	100.5
MF	PARTICULATE WT-PARTIAL[a]	MG	0.00	160.00	448.00
MT	PARTICULATE WT-TOTAL[a]	MG	191.00	416.00	795.00
IC	PERC IMPINGER CATCH		100.00	61.54	43.65
CANM	PART. LOAD-PTL,STD CN[a]	MG/NM3	0.00	451.57	1915.38
CAOM	PART. LOAD-TTL.STD CN[a]	MG/NM3	588.70	1174.09	3398.95
CATM	PART. LOAD-PTL,STK CN[a]	MG/M3	0.00	217.97	938.08
CAUM	PART. LOAD-TTL.STK CN[a]	MG/M3	359.52	566.73	1664.67
CAWM	PARTIC EMIS-PARTIAL[a]	KG/HR	0.00000	.02176[c]	.07741[b]
CAXM	PARTIC EMIS-TOTAL[a]	KG/HR	.03491[b]	.05657[c]	.13738[b]
EA	PERCENT EXCESS AIR		39	14	-11

a/ x 10^{-3}.

b/ Per stack; to obtain total for kiln, multiply by 7.

c/ Per stack; to obtain total for kiln, multiply by 8.

DRAFT

TABLE D-28

SUMMARY OF RESULTS (POM-LIKE MATERIAL)

NAME	DESCRIPTION	UNITS	2	4	6
	DATE OF RUN		12-03-75	12-04-75	12-05-75
VMSTD	VOL DRY GAS-STD COND	DSCF	15.64	15.98	13.64
PMOS	PERCENT MOISTURE BY VOL		25.0	28.5	35.0
TS	AVG STACK TEMPERATURE	DEG.F	150.0	155.6	163.8
QS	STK FLOWRATE, DRY,STD CN	DSCFM	42	42	32
QA	ACTUAL STACK FLOWRATE	ACFM	67	69	60
PERI	PERCENT ISOKINETIC		93.5	97.1	106.8
PARTICULATES -- PARTIAL CATCH					
MF	PARTICULATE WT-PARTIAL[a]	MG	345.00	143.00	69.00
CAN	PART. LOAD-PTL,STD CN[a]	GR/DSCF	.33970	.13781	.07792
CAT	PART. LOAD-PTL,STK CN[a]	GR/ACF	.21694	.08309	.04208
CAW	PARTIC EMIS-PARTIAL[a]	LB/HR	.12366[b]	.04932[b]	.02164[b]
PARTICULATES -- TOTAL CATCH					
MT	PARTICULATE WT-TOTAL[a]	MG	376.00	213.00	105.00
CAO	PART. LOAD-TTL,STD CN[a]	GR/DSCF	.37022	.20526	.11858
CAU	PART. LOAD-TTL,STK CN[a]	GR/ACF	.23643	.12377	.06404
CAX	PARTIC EMIS-TOTAL[a]	LB/HR	.13477[b]	.07347[b]	.03294[b]
IC	PERC IMPINGER CATCH		8.24	32.86	34.29

a/ x 10-3.

b/ Per stack; to obtain total for kiln, multiply by 8.

DRAFT

DRAFT

TABLE D-28 (Concluded)

NAME	DESCRIPTION	UNITS	8	10	12
	DATE OF RUN		12-06-75	12-07-75	12-08-75
VMSTD	VOL DRY GAS-STD COND	DSCF	11.43	12.49	8.24
PMOS	PERCENT MOISTURE BY VOL		28.5	38.9	32.3
TS	AVG STACK TEMPERATURE	DEG.F	155.0	204.4	258.6
QS	STK FLOWRATE, DRY,STD CN	DSCFM	35	28	24
QA	ACTUAL STACK FLOWRATE	ACFM	57	59	49
PERI	PERCENT ISOKINETIC		95.0	111.8	100.5
PARTICULATES -- PARTIAL CATCH					
MF	PARTICULATE WT-PARTIAL[a/]	MG	0.00	160.00	448.00
CAN	PART. LOAD-PTL,STD CN[a/]	GR/DSCF	0.00000	.19734	.83702
CAT	PART. LOAD-PTL,STK CN[a/]	GR/ACF	0.00000	.09525	.40994
CAW	PARTIC EMIS-PARTIAL[a/]	LB/HR	0.00000	.04797[b/]	.17067[c/]
PARTICULATES -- TOTAL CATCH					
MT	PARTICULATE WT-TOTAL[a/]	MG	191.00	416.00	795.00
CAO	PART. LOAD-TTL,STD CN[a/]	GR/DSCF	.25726	.51308	1.48533
CAU	PART. LOAD-TTL,STK CN[a/]	GR/ACF	.15711	.24766	.72746
CAX	PARTIC EMIS-TOTAL[a/]	LB/HR	.07695[c/]	.12472[b/]	.30286[c/]
IC	PERC IMPINGER CATCH		100.00	61.54	43.65

a/ x 10^{-3}.

b/ Per stack; to obtain total for kiln, multiply by 8.

c/ Per stack; to obtain total for kiln, multiply by 7.

DRAFT

DRAFT

TABLE D-29

SUMMARY OF RESULTS--METRIC UNITS (POM-LIKE MATERIAL)

NAME	DESCRIPTION	UNITS	2	4	6
	DATE OF RUN		12-03-75	12-04-75	12-05-75
VMSTM	VOL DRY GAS-STD COND	NCM	.443	.453	.386
PMOS	PERCENT MOISTURE BY VOL		25.0	28.5	35.0
TSM	AVG STACK TEMPERATURE	DEG.C	65.5	68.7	73.2
QSM	STK FLOWRATE, DRY,STD CN	NM3/MIN	1.2	1.2	.9
QAM	ACTUAL STACK FLOWRATE	M3/MIN	1.9	2.0	1.7
PERI	PERCENT ISOKINETIC		93.5	97.1	106.8
EA	PERCENT EXCESS AIR		67	42	64
PARTICULATES -- PARTIAL CATCH					
MF	PARTICULATE WT-PARTIAL[a/]	MG	345.00	143.00	69.00
CANM	PART. LOAD-PTL,STD CN[a/]	MG/NM3	777.34	315.34	178.32
CATM	PART. LOAD-PTL,STK CN[a/]	MG/M3	496.43	190.15	96.30
CAWM	PARTIC EMIS-PARTIAL[a/]	KG/HR	.05609[b/]	.02237[b/]	.00982[b/]
PARTICULATES -- TOTAL CATCH					
MT	PARTICULATE WT-TOTAL[a/]	MG	376.00	213.00	105.00
CAOM	PART. LOAD-TTL,STD CN[a/]	MG/NM3	847.19	469.71	271.35
CAUM	PART. LOAD-TTL,STK CN[a/]	MG/M3	541.04	283.23	146.55
CAXM	PARTIC EMIS-TOTAL[a/]	KG/HR	.06113[b/]	.03332[b/]	.01494[b/]
IC	PERC IMPINGER CATCH		8.24	32.86	34.29

a/ x 10^{-3}.

b/ Per stack; to obtain total for kiln, multiply by 8.

DRAFT

DRAFT

TABLE D-29 (Concluded)

NAME	DESCRIPTION	UNITS	8	10	12
	DATE OF RUN		12-06-75	12-07-75	12-08-75
VMSTM	VOL DRY GAS-STD COND	NCM	.324	.354	.233
PMOS	PERCENT MOISTURE BY VOL		28.5	38.9	32.3
TSM	AVG STACK TEMPERATURE	DEG.C	68.3	95.8	125.9
QSM	STK FLOWRATE, DRY,STD CN	NM3/MIN	1.0	.8	.7
QAM	ACTUAL STACK FLOWRATE	M3/MIN	1.6	1.7	1.4
PERI	PERCENT ISOKINETIC		95.0	111.8	100.5
EA	PERCENT EXCESS AIR		39	14	-11
PARTICULATES -- PARTIAL CATCH					
MF	PARTICULATE WT-PARTIAL[a/]	MG	0.00	160.00	448.00
CANM	PART. LOAD-PTL,STD CN[a/]	MG/NM3	0.00	451.57	1915.38
CATM	PART. LOAD-PTL,STK CN[a/]	MG/M3	0.00	217.97	938.08
CAWM	PARTIC EMIS-PARTIAL[a/]	KG/HR	0.00000	.02176[b/]	.07741[c/]
PARTICULATES -- TOTAL CATCH					
MT	PARTICULATE WT-TOTAL[a/]	MG	191.00	416.00	795.00
CAOM	PART. LOAD-TTL,STD CN[a/]	MG/NM3	588.70	1174.09	3398.95
CAUM	PART. LOAD-TTL,STK CN[a/]	MG/M3	359.52	566.73	1664.67
CAXM	PARTIC EMIS-TOTAL[a/]	KG/HR	.03491[c/]	.05657[b/]	.13738[c/]
IC	PERC IMPINGER CATCH		100.00	61.54	43.65

a/ x 10^{-3}.

b/ Per stack; to obtain total for kiln, multiply by 8.

c/ Per stack; to obtain total for kiln, multiply by 7.

DRAFT

DRAFT

DRAFT

APPENDIX E

FLUE GAS COMBUSTION COMPUTATIONS

DRAFT

DRAFT

The computations that follow are based on data found in the Handbook of Chemistry and Physics, 23rd Edition[5/] and Lange's Handbook of Chemistry[6/] and assumptions made as noted.

A long chain aliphatic hydrocarbon, Bryonane ($C_{20}H_{42}$, mol wt 282), has been taken to represent the tar and oil fraction of the flue gas stream. A mole of any referenced gas is assumed to occupy 0.79 cu ft. A theoretical flame temperature of 3790°F (2090°C) based on several natural gas streams[5/] was used for combustion of the flue gas stream. This natural gas then requires 16 cu ft air per cubic foot natural gas[5/] in addition to that required for combustion of the flue gas stream, and will produce 24,500 cal/cu ft natural gas.

Heats of vaporization of water are as follows:[5,6/]

Temperature (°C)	Heat of vaporization (cal/g)
60	563.2
70	557.5
95	542.7
145	507.3

Specific heats of the various compounds are as follows:[6/]

Compound	Specific heat (cal/g/°C)
Air	0.24
Carbon dioxide	0.20
Carbon monoxide	0.25
Nitrogen	0.25
Oxygen	0.22
Water	0.48

DRAFT

DRAFT

Computations to determine the net heat available from the flue gas stream are based on the heats of combustion of the water and tar and oil fractions less the heat of vaporization of the water.

Computations to determine the air fuel ratio (amount of air to be added per amount of flue gas to allow combustion) are based on stoichiometric combustion of the given amount of $C_{20}H_{42}$ available in each sample.

Calculations to determine the amount of natural gas needed for combustion of the flue gas are based on raising the gas stream and additional air from the stack temperature to the flame temperature. For the water fraction this includes the heat of vaporization.

These values must be taken as approximate or "ball-park" estimates. The positive heat of combustion for the water fraction indicates the presence of entrained volatile organics. The tar and oil fraction is composed of many constituents which may not be accurately represented by $C_{20}H_{42}$. Some constituents may have passed through the sampling train without entrapment or have been lost during sample recovery. Any or all of these factors may contribute to errors in the calculations.

<u>December 4</u>

Net heat available from flue gas stream:

Water fraction: (296 cal/g) (8.4 g) = 2,486.4 cal
(-557.5 cal/g) (8.4 g) = -4,683.0 cal

DRAFT

DRAFT

Tar and oil fraction: (1,185 cal/g) (0.6 g) = 711.0 cal

Net	2,486.4	cal
+	711.0	cal
	3,197.4	cal
	-4,683.0	cal
	-1,485.6	cal

Air/fuel ratio:

0.6 g $C_{20}H_{42}$ (mol wt 282) = 0.002 mole

	% by Volume	Volume (cu ft)	Moles
H_2O	30.5	0.2562	0.47
CO_2	15 (of 69.5)	0.08757	0.11
O_2	7.3	0.0426174	0.05
CO	2.9	0.0169302	0.02
N_2	74.8	0.4366824	0.55
		0.84	

$$0.002\ C_{20}H_{42} + 0.061\ O_2 \longrightarrow 0.04\ CO_2 + 0.042\ H_2O$$

0.061 mole O_2 required
0.05 mole O_2 available in flue gas
0.011 mole O_2 additional required

$$\frac{0.011 \text{ mole } O_2}{0.002 \text{ mole fuel}} = 5.5$$

$$\frac{\text{mole air}}{\text{mole fuel}} = \frac{\text{volume air}}{\text{volume fuel}} = \text{air/fuel ratio} = (5.5)\left(\frac{1}{0.21}\right) = 26.2$$

Requires 26.2 cu ft air to combust 1 cu ft flue gas

Flue gas combustion:

Stack temperature = 70°C ΔT = 2090°C - 70°C = 2020°C

DRAFT

DRAFT

Constituent	Moles	Specific heat (cal/g/°C)	Heat required per volume stack gas sampled (cal)	Heat required per cu ft stack gas (cal)
CO_2	0.11	0.20	1,955	2,328
O_2	0.05	0.22	711	846
CO	0.02	0.25	283	337
N_2	0.55	0.25	7,777	9,258
H_2O	0.47	0.48	8,801	9,620
(100°C to 2090°C = ΔT = 1990°C)				22,389
Combustion air	0.05	0.24	698	831
Heat of vaporization			4,683	5,575
			Heat required	28,795
		Water fraction	2,486	2,690
		Tar and oil fraction	711	846
			Net heat available	3,806
			Net heat required	24,989

Thus, 1.02 cu ft natural gas required per cubic foot flue gas and approximately 42 cu ft air total

December 6

Net heat available:

Water fraction: (227 cal/g) (4.6 g) = 1,044.2 cal
(-557.5 cal/g) (4.6 g) = 2,564.5 cal

Tar and oil fraction: (7,256 cal/g) (0.6 g) = 4,353.6 cal

Net: +2,833.3 cal

Air/fuel ratio:

0.002 mole $C_{20}H_{42}$
0.05 mole O_2

DRAFT

DRAFT

$$0.002\ C_{20}H_{42} + 0.061\ O_2 \longrightarrow 0.04\ CO_2 + 0.042\ H_2O$$

0.011 mole O_2 required

$$\frac{0.011 \text{ mole } O_2}{0.002 \text{ mole fuel}}$$

$$\text{Air/fuel ratio} = \frac{5.5}{0.21} = 26.2$$

Flue gas combustion:

Constituent	Moles	Specific heat (cal/g/°C)	Heat required per cu ft stack gas (cal)
CO_2	0.13	0.20	2,458
O_2	0.05	0.22	756
CO	0.01	0.25	150
N_2	0.63	0.25	9,477
H_2O	0.26	0.48	4,756
			17,597
Combustion air	0.05	0.24	743
Heat of vaporization			2,728
		Heat required	21,068
		Water fraction	1,111
		Tar and oil fraction	4,631
		Net heat available	5,742
		Net heat required	15,326

Requires 0.63 cu ft natural gas per cubic foot flue gas and approximately 36 cu ft air total

December 7

Net heat available:

Water fraction: (153 cal/g) (16.3 g) = 2,493.9 cal
(-542.7 cal/g) (16.3 g) = -8,846.01 cal

DRAFT

DRAFT

Tar and oil fraction: (7,097 cal/g) (1.2 g) = 8,516.4 cal

Net: +2,164.3 cal

Air/fuel ratio:

0.004 mole $C_{20}H_{42}$
0.08 mole O_2

$$0.004\ C_{20}H_{42} + 0.122\ O_2 \longrightarrow 0.08\ CO_2 + 0.084\ H_2O$$

0.042 mole O_2 required

$$\frac{0.042 \text{ mole } O_2}{0.004 \text{ mole fuel}} = 10.5$$

Air/fuel ratio = 50

Flue gas combustion:

Constituent	Moles	Specific heat (cal/g/°C)	Heat required per cu ft stack gas (cal)
CO_2	0.30	0.20	2,801
O_2	0.08	0.22	598
CO	0.09	0.25	669
N_2	1.16	0.25	8,617
H_2O	0.91	0.48	8,322
			21,007
Combustion air	0.20	0.24	1,467
Heat of vaporization			4,705
		Heat required	27,179
		Water fraction	1,326
		Tar and oil fraction	4,530
		Net heat available	5,856
		Net heat required	21,323

DRAFT

DRAFT

Requires 0.87 cu ft natural gas per cubic foot flue gas and approximately 64 cu ft air total

December 8 - First Run

Net heat available:

Water fraction: (173 cal/g) (11.0 g) = 1,903 cal
(-507.3 cal/g) (11.0 g) = -5,580.3 cal

Tar and oil fraction: (8,877 cal/g) (0.6 g) = 5,326.2 cal

Net: +1,648.9 cal

Air/fuel ratio:

0.002 mole $C_{20}H_{42}$
0.02 mole O_2

$$0.002\ C_{20}H_{42} + 0.061\ O_2 \longrightarrow 0.04\ CO_2 + 0.042\ H_2O$$

0.041 mole O_2 required

$$\frac{0.041 \text{ mole } O_2}{0.002 \text{ mole fuel}} = 20.5$$

Air/fuel ratio = 97.6

DRAFT

DRAFT

Flue gas combustion:

Constituent	Moles	Specific heat (cal/g/°C)	Heat required per cu ft stack gas (cal)
CO_2	0.48	0.20	3,197
O_2	0.02	0.22	107
CO	0.15	0.25	795
N_2	1.52	0.25	8,052
H_2O	0.61	0.48	4,801
			16,232
Combustion air	0.20	0.24	1,046
Heat of vaporization			2,171
		Heat required	19,449
		Water fraction	740
		Tar and oil fraction	2,072
		Net heat available	2,812
		Net heat required	16,637

Requires 0.68 cu ft natural gas per cubic foot flue gas and approximately 109 cu ft air total

December 8 - Second Test

Net heat available:

Water fraction: (855 cal/g) (11.8 g) = 10,089 cal
(-507.3 cal/g) (11.8 g) = -5,986.14 cal

Tar and oil fraction: (4,715 cal/g) (0.6 g) = 2,829 cal

Net: +6,931.9 cal

Air/fuel ratio:

0.002 mole $C_{20}H_{42}$
0.02 mole O_2

DRAFT

DRAFT

$$0.002\ C_{20}H_{42} + 0.061\ O_2 \longrightarrow 0.04\ CO_2 + 0.042\ H_2O$$

0.041 mole O_2 required

$$\frac{0.041 \text{ mole } O_2}{0.002 \text{ mole fuel}} = 20.5$$

Air/fuel ratio = 97.6

Flue gas combustion:

Constituent	Moles	Specific heat (cal/g/°C)	Heat required per cu ft stack gas (cal)
CO_2	0.48	0.20	3,260
O_2	0.02	0.22	109
CO	0.14	0.25	756
N_2	1.49	0.25	8,050
H_2O	0.66	0.48	4,503
			16,678
Combustion air	0.20	0.24	2,134
Heat of vaporization			2,375
		Heat required	21,187
		Water fraction	4,004
		Tar and oil fraction	1,123
		Net heat available	5,127
		Net heat required	16,060

Requires 0.66 cu ft natural gas per cubic foot flue gas and approximately 108 cu ft air total

DRAFT

DRAFT

APPENDIX F

COMPUTATION OF KILN VOLUME

DRAFT

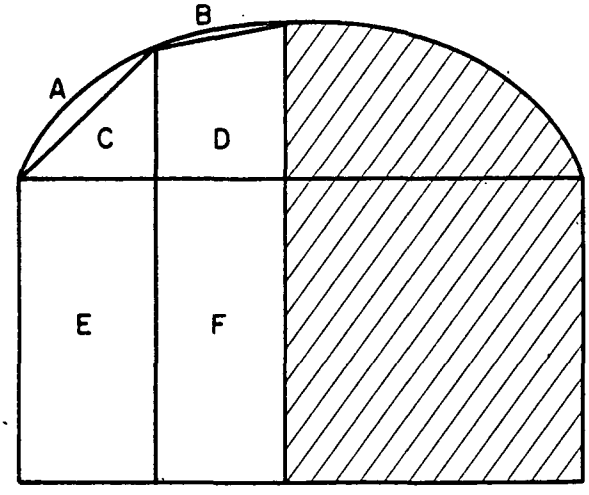

All units in inches unless otherwise noted

DRAFT

Area A:

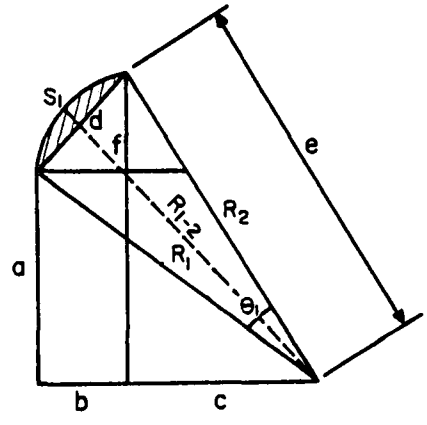

a = 84
b = 60
c = 60

$$R_1 = \sqrt{(a)^2 + (b + c)^2} = \sqrt{(84)^2 + (120)^2}$$
$$= 146.4786674$$

$$a + f = 126$$

$$f = 126 - 84 = 42$$

$$R_2 = \sqrt{(a + f)^2 + (c)^2} = \sqrt{(126)^2 + (60)^2}$$
$$= 139.5564402$$

$$R_{1-2} = \frac{R_1 + R_2}{2} = 143.0175538$$

$$d = \sqrt{(b)^2 + (f)^2} = \sqrt{(60)^2 + (42)^2}$$
$$= 73.23933369$$

$$e = 1/2 \sqrt{4(R_{1-2})^2 - (d)^2} = 1/2$$
$$\sqrt{(4)\ (143)^2 - (73)^2} = 138.2498488$$

$$\theta_1 = 2 \text{ arc sin} \left[\frac{d}{(2)\ (R_{1-2})}\right]$$
$$= 2 \text{ arc sin} \left[\frac{73}{(2)\ (143)}\right]$$

$$\theta_1 = 0.5178678409 \text{ radians}$$

$$S_1 = (R_{1-2})\ (\theta_1) = (143)\ (0.518) =$$
$$= 74.0641918$$

DRAFT

Area A = 233.576 sq in.

= 1.622 sq ft

$$\text{Area A} = 1/2\ [(R_{1-2})\ (S_1) - (d)\ (e)]$$

$$= 1/2\ [(143)\ (74) - (73)\ (138)]$$
$$= 233.5763633$$

DRAFT

Area B:

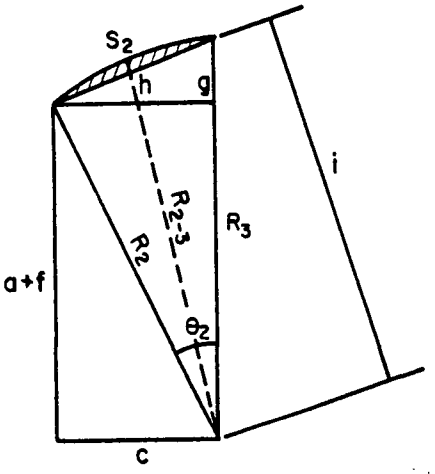

a+f = 126
c = 60
R_3 = 138
R_2 = 139.5564402

$$R_{2-3} = \frac{R_1 + R_2}{2} = 138.7782201$$

$$g = R_3 - (a + f) = 138 - (126) = 12$$

$$h = \sqrt{g^2 + c^2} = \sqrt{(12)^2 + (60)^2}$$
$$= 61.18823416$$

$$i = 1/2\sqrt{4(R_{2-3})^2 - (h)^2}$$
$$= 1/2\sqrt{(4)\ (139) - (61)^2}$$
$$= 135.3639331$$

$$\theta_2 = 2 \text{ arc sin}\left[\frac{h}{(2)\ (R_{2-3})}\right]$$
$$= 2 \text{ arc sin}\left[\frac{61}{(2)\ (139)}\right]$$

$$\theta_2 = 0.4445583706 \text{ radians}$$

$$S_2 = (R_{2-3})\ (\theta_2) = (139)\ (0.445)$$
$$= 61.69501066$$

Area B = 139.622 sq in.

= 0.970 sq ft

$$\text{Area B} = 1/2\ [(R_{2-3})\ (S_2) - (h)\ (i)]$$
$$= 1/2\ [(139)\ (62) - (61)\ (135)]$$
$$= 139.6218666$$

Area C:

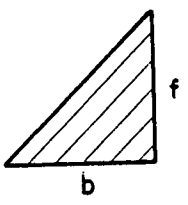

b = 60
f = 42

$$\text{Area C} = 1/2\ (b)\ (f) = 1/2\ (60)\ (42)$$
$$= 1{,}260$$

Area C = 1,260 sq in.

= 8.75 sq ft

DRAFT

DRAFT

Area D:

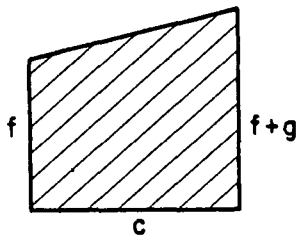

c = 60
f = 42
f+g = 54

Area D = 1/2 [(f) + (f + g)] c
= 1/2 [42 + 54] 60

= 2,880

Area D = 2,880 sq in.

= 20 sq ft

Area E and F:

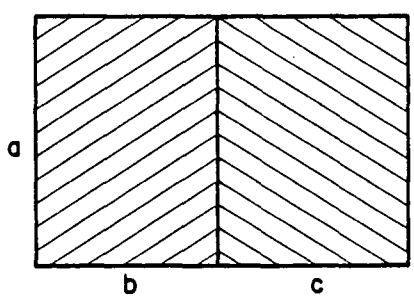

a = 84
b = 60
c = 60

Area E and F = (a) (b + c) = (84) (120)
= 10,080

Area E and F = 10,080 sq in.

= 70 sq ft

Area of Kiln End:

Total Area = (A + B + C + D + E + F) x 2

= 233.576 + 139.622 + 1,260
+ 2,280 + 10,080

= 14,693.198 sq in.

= (101.342 sq ft) x 2

= 202.683 sq ft

DRAFT

DRAFT

Volume of kiln: Volume = (area) x (length)

= (202.683) (32)

= 6,485.866 cu ft (183.659 cu m)

As one cord of wood is 4 ft x 4 ft x 8 ft, the volume of one cord of wood is 128 cu ft (3.625 cu m). Thus, the volume of the kiln is approximately 50.67 cords.

Allowing for air space left along the walls and roof and provided along the floor, the total amount of wood in the kiln would be approximately 45 cords.

DRAFT

DRAFT

APPENDIX G

PRELIMINARY RUNS - FIELD DATA

DRAFT

TABLE G-1

PRELIMINARY DATA AND CALCULATED VALUES

RUN- 1-P DATE- 09-29-75

ATMOS TEMP (DG.F)	ATMOS PRES (I.HG)	STACK VAC (I.H2O)	H2O COND (ML)	PARTIC WT-PTL (MG)	PARTIC WT-TTL (MG)	STACK AREA (FT2)	INIT VOL (DCF)	PERC O2 DRY	PERC CO2 DRY	PERC CO DRY	PITOT TUBE COEF
70.0	29.15	0.00	42.9	0.00	0.00	.20	548.70	3.0	13.0	3.5	.850

PORT- POINT		SAMP TIME (MIN)	METER VOL (DCF)	DELTA P (I.H2O)	DELTA H (I.H2O)	TEMP IN (D.F)	TEMP OUT (D.F)	TRAIN VAC (I.HG)	STACK TEMP (D.F)	S.GEL TEMP (D.F)	PROBE T DIA (IN)	VEL (FPM)
1	1	5.00	549.86	.004	.135	69.0	70.0	2.0	190.0		.597	250.0
1	1	5.00	551.02	.004	.135	70.0	70.0	2.0	190.0		.597	250.0
1	1	5.00	552.17	.004	.135	75.0	70.0	2.0	240.0		.597	250.0
1	1	5.00	553.34	.004	.135	79.0	72.0	2.0	200.0	60.0	.597	250.0
1	1	5.00	554.60	.004	.135	81.0	74.0	2.0	200.0		.597	250.0
1	1	5.00	556.56	.004	.200	83.0	75.0	2.5	200.0		.597	250.0

DRAFT

DRAFT

TABLE G-2

PRELIMINARY DATA AND CALCULATED VALUES

RUN- 2-P DATE- 09-29-76

ATMOS TEMP (DG.F)	ATMOS PRES (I.HG)	STACK VAC (I.H2O)	H2O COND (ML)	PARTIC WT-PTL (MG)	PARTIC WT-TTL (MG)	STACK AREA (FT2)	INIT VOL (DCF)	PERC O2 DRY	PERC CO2 DRY	PERC CO DRY	PITOT TUBE COEF
70.0	29.12	0.00	35.0	0.00	0.00	.20	556.56	3.0	13.0	3.5	.850

PORT-POINT		SAMP TIME (MIN)	METER VOL (DCF)	DELTA P (I.H2O)	DELTA H (I.H2O)	TEMP IN (D.F)	TEMP OUT (D.F)	TRAIN VAC (I.HG)	STACK TEMP (D.F)	S.GEL TEMP (D.F)	PROBE T DIA (IN)	VEL (FPM)
1	1	5.00	557.24	.004	.170	75.0	76.0	2.0	230.0		.594	250.0
1	1	5.00	558.61	.004	.210	78.0	77.0	2.0	230.0		.594	250.0
1	1	5.00	560.03	.004	.210	84.0	78.0	2.0	200.0		.594	250.0
1	1	5.00	561.40	.004	.200	87.0	80.0	2.0	200.0	75.0	.594	250.0
1	1	5.00	562.70	.004	.170	89.0	81.0	2.0	200.0		.594	250.0
1	1	5.00	563.95	.004	.170	90.0	82.0	2.0	290.0		.594	250.0

DRAFT

DRAFT

TABLE G-3

PRELIMINARY DATA AND CALCULATED VALUES

RUN- 3-P DATE- 11-04-75

ATMOS TEMP (DG.F)	ATMOS PRES (I.HG)	STACK VAC (I.H2O)	H2O COND (ML)	PARTIC WT-PTL (MG)	PARTIC WT-TTL (MG)	STACK AREA (FT2)	INIT VOL (DCF)	PERC O2 DRY	PERC CO2 DRY	PERC CO DRY	PITOT TUBE COEF
65.0	29.38	0.00	47.0	0.00	0.00	.20	232.39	.5	20.0	4.7	.850

PORT- POINT	SAMP TIME (MIN)	METER VOL (DCF)	DELTA P (I.H2O)	DELTA H (I.H2O)	TEMP IN (D.F)	TEMP OUT (D.F)	TRAIN VAC (I.HG)	STACK TEMP (D.F)	S.GEL TEMP (D.F)	PROBE T DIA (IN)	VEL (FPM)
1 1	5.00	233.70	.003	.170	68.0	67.0	2.5	220.0	50.0	.592	230.0
1 1	5.00	234.59	.003	.170	71.0	68.0	3.0	200.0		.592	220.0
1 1	5.00	235.12	.003	.170	73.0	68.0	5.0	200.0		.592	220.0
1 1	5.00	236.27	.003	.170	75.0	70.0	5.0	200.0		.592	220.0
1 1	5.00	237.36	.003	.170	78.0	71.0	5.5	200.0		.592	220.0
1 1	5.00	238.26	.003	.170	80.0	72.0	5.5	200.0		.592	220.0

DRAFT

DRAFT

TABLE G-4

PRELIMINARY DATA AND CALCULATED VALUES

RUN- 4-P DATE- 11-04-75

ATMOS TEMP (DG.F)	ATMOS PRES (I.HG)	STACK VAC (I.H2O)	H2O COND (ML)	PARTIC WT-PTL (MG)	PARTIC WT-TTL (MG)	STACK AREA (FT2)	INIT VOL (DCF)	PERC O2 DRY	PERC CO2 DRY	PERC CO DRY	PITOT TUBE COEF
75.0	29.34	0.00	46.5	0.00	0.00	.20	238.26	.5	20.0	4.7	.850

PORT- POINT		SAMP TIME (MIN)	METER VOL (DCF)	DELTA P (I.H2O)	DELTA H (I.H2O)	TEMP IN (D.F)	TEMP OUT (D.F)	TRAIN VAC (I.HG)	STACK TEMP (D.F)	S.GEL TEMP (D.F)	PROBE T DIA (IN)	VEL (FPM)
1	1	5.00	239.33	.003	.050	77.0	76.0	2.0	250.0		.613	220.0
1	1	5.00	240.28	.003	.050	78.0	77.0	2.0	245.0	60.0	.613	220.0
1	1	5.00	241.03	.003	.050	79.0	77.0	2.0	245.0		.613	220.0
1	1	5.00	241.63	.003	.050	80.0	77.0	2.0	245.0		.613	220.0
1	1	5.00	242.30	.003	.050	82.0	78.0	3.0	245.0		.613	220.0
1	1	5.00	243.20	.003	.050	84.0	79.0	5.0	245.0		.613	220.0

DRAFT

DRAFT

TABLE G-5

PRELIMINARY DATA AND CALCULATED VALUES

RUN- 5-P DATE- 11-04-75

ATMOS TEMP (DG.F)	ATMOS PRES (I.HG)	STACK VAC (I.H2O)	H2O COND (ML)	PARTIC WT-PTL (MG)	PARTIC WT-TTL (MG)	STACK AREA (FT2)	INIT VOL (DCF)	PERC O2 DRY	PERC CO2 DRY	PERC CO DRY	PITOT TUBE COEF
75.0	29.34	0.00	86.5	0.00	0.00	.20	243.20	.5	20.0	4.7	.850

PORT- POINT		SAMP TIME (MIN)	METER VOL (DCF)	DELTA P (I.H2O)	DELTA H (I.H2O)	TEMP IN (D.F)	TEMP OUT (D.F)	TRAIN VAC (I.HG)	STACK TEMP (D.F)	S.GEL TEMP (D.F)	PROBE T DIA (IN)	VEL (FPM)
1	1	5.00	244.31	.002	.130	82.0	81.0	2.0	245.0		.613	200.0
1	1	5.00	245.36	.002	.120	82.0	82.0	2.5	270.0		.613	200.0
1	1	5.00	246.33	.002	.120	82.0	82.0	3.0	270.0		.613	200.0
1	1	5.00	247.40	.002	.120	84.0	82.0	5.0	270.0	65.0	.613	200.0
1	1	5.00	248.49	.002	.170	84.0	82.0	7.0	270.0		.613	200.0
1	1	5.00	249.55	.002	.150	84.0	82.0	8.0	270.0		.613	200.0

DRAFT

DRAFT

TABLE G-6

PRELIMINARY DATA AND CALCULATED VALUES

RUN- 6-P DATE- 11-04-75

ATMOS TEMP (DG.F)	ATMOS PRES (I.HG)	STACK VAC (I.H2O)	H2O COND (ML)	PARTIC WT-PTL (MG)	PARTIC WT-TTL (MG)	STACK AREA (FT2)	INIT VOL (DCF)	PERC O2 DRY	PERC CO2 DRY	PERC CO DRY	PITOT TUBE COEF
75.0	29.35	0.00	64.0	0.00	0.00	.20	249.55	.5	20.0	4.7	.850

PORT- POINT	SAMP TIME (MIN)	METER VOL (DCF)	DELTA P (I.H2O)	DELTA H (I.H2O)	TEMP IN (D.F)	TEMP OUT (D.F)	TRAIN VAC (I.HG)	STACK TEMP (D.F)	S.GEL TEMP (D.F)	PROBE T DIA (IN)	VEL (FPM)
1 1	5.00	250.50	.002	.130	78.0	78.0	7.5	270.0		.613	200.0
1 1	5.00	251.35	.002	.130	78.0	78.0	8.0	280.0		.613	200.0
1 1	5.00	252.50	.002	.150	78.0	79.0	7.5	280.0		.613	200.0
1 1	5.00	253.70	.002	.170	80.0	79.0	6.0	280.0		.613	200.0
1 1	5.00	254.74	.002	.150	83.0	80.0	6.5	280.0		.613	200.0
1 1	5.00	255.75	.002	.150	86.0	80.0	6.5	280.0		.613	200.0

DRAFT

DRAFT

TABLE G-7

PRELIMINARY EMISSION DATA

NAME	DESCRIPTION	UNITS	1-P	2-P	3-P
	DATE OF RUN		09-29-75	09-29-76	11-04-75
DN	PROBE TIP DIAMETER	IN	.597	.594	.592
TT	NET TIME OF RUN	MIN	30.0	30.0	30.0
PB	BAROMETRIC PRESSURE	IN.HG	29.15	29.12	29.38
PM	AVG ORIFICE PRES DROP	IN.H2O	.146	.188	.170
VM	VOL DRY GAS-METER COND	DCF	7.86	7.39	5.87
TM	AVG GAS METER TEMP	DEG.F	74.0	81.4	71.8
VMSTD	VOL DRY GAS-STD COND	DSCF	7.60	7.04	5.75
VW	TOTAL H2O COLLECTED	ML	42.9	35.0	47.0
VWV	VOL H2O VAPOR-STD COND	SCF	2.03	1.66	2.23
PMOS	PERCENT MOISTURE BY VOL		21.1	19.1	27.9
MD	MOLE FRACTION DRY GAS		.789	.809	.721
PCO2	PERCENT CO2 BY VOL, DRY		13.0	13.0	20.0
PO2	PERCENT O2 BY VOL, DRY		3.0	3.0	.5
PCO	PERCENT CO BY VOL, DRY		3.5	3.5	4.7
PN2	PERCENT N2 BY VOL, DRY		80.5	80.5	74.8
MWD	MOLECULAR WT-DRY STK GAS		30.20	30.20	31.22
MW	MOLECULAR WT-STK GAS		27.63	27.87	27.53
CP	PITOT TUBE COEFFICIENT		.850	.850	.850
DPS	AVG STK VELOCITY HEAD-	IN.H2O	.004	.004	.003
TS	AVG STACK TEMPERATURE	DEG.F	203.3	225.0	203.3
NP	NET SAMPLING POINTS		6	6	6
PST	STATIC PRES OF STACK	IN.HG	-0.00	-0.00	-0.00
PS	STACK PRESSURE, ABSOLUTE	IN.HG	29.15	29.12	29.38
VS	AVG STACK GAS VELOCITY	FPM	250	250	222
AS	STACK AREA	IN2	29	29	29
QS	STK FLOWRATE, DRY,STD CN	DSCFM	31	30	25
QA	ACTUAL STACK FLOWRATE	ACFM	50	50	44
PERI	PERCENT ISOKINETIC		84.6	79.8	79.7
EA	PERCENT EXCESS AIR		6	6	-9

DRAFT

DRAFT

TABLE G-7 (Concluded)

NAME	DESCRIPTION	UNITS	4-P	5-P	6-P
	DATE OF RUN		11-04-75	11-04-75	11-04-75
DN	PROBE TIP DIAMETER	IN	.613	.613	.613
TT	NET TIME OF RUN	MIN	30.0	30.0	30.0
PB	BAROMETRIC PRESSURE	IN.HG	29.34	29.34	29.35
PM	AVG ORIFICE PRES DROP	IN.H2O	.050	.135	.147
VM	VOL DRY GAS-METER COND	DCF	4.94	6.35	6.20
TM	AVG GAS METER TEMP	DEG.F	78.7	82.4	79.8
VMSTD	VOL DRY GAS-STD COND	DSCF	4.77	6.09	5.97
VW	TOTAL H2O COLLECTED	ML	46.5	86.5	64.0
VWV	VOL H2O VAPOR-STD COND	SCF	2.20	4.10	3.03
PMOS	PERCENT MOISTURE BY VOL		31.6	40.3	33.7
MD	MOLE FRACTION DRY GAS		.684	.597	.663
PCO2	PERCENT CO2 BY VOL, DRY		20.0	20.0	20.0
PO2	PERCENT O2 BY VOL, DRY		.5	.5	.5
PCO	PERCENT CO BY VOL, DRY		4.7	4.7	4.7
PN2	PERCENT N2 BY VOL, DRY		74.8	74.8	74.8
MWD	MOLECULAR WT-DRY STK GAS		31.22	31.22	31.22
MW	MOLECULAR WT-STK GAS		27.04	25.90	26.77
CP	PITOT TUBE COEFFICIENT		.850	.850	.850
DPS	AVG STK VELOCITY HEAD	IN.H2O	.003	.002	.002
TS	AVG STACK TEMPERATURE	DEG.F	245.8	265.8	278.3
NP	NET SAMPLING POINTS		6	6	6
PST	STATIC PRES OF STACK	IN.HG	-0.00	-0.00	-0.00
PS	STACK PRESSURE, ABSOLUTE	IN.HG	29.34	29.34	29.35
VS	AVG STACK GAS VELOCITY	FPM	220	200	200
AS	STACK AREA	IN2	29	29	29
QS	STK FLOWRATE, DRY,STD CN	DSCFM	22	17	19
QA	ACTUAL STACK FLOWRATE	ACFM	44	40	40
PERI	PERCENT ISOKINETIC		69.8	115.3	103.7
EA	PERCENT EXCESS AIR		-9	-9	-9

DRAFT

DRAFT

TABLE G-8

PRELIMINARY EMISSION DATA (METRIC RESULTS)

NAME	DESCRIPTION	UNITS	1-P	2-P	3-P
	DATE OF RUN		09-29-75	09-29-76	11-04-75
DN	PROBE TIP DIAMETER	IN	.597	.594	.592
TT	NET TIME OF RUN	MIN	30.0	30.0	30.0
PB	BAROMETRIC PRESSURE	IN.HG	29.15	29.12	29.38
PM	AVG ORIFICE PRES DROP	IN.H2O	.146	.188	.170
VM	VOL DRY GAS-METER COND	DCF	7.86	7.39	5.87
TM	AVG GAS METER TEMP	DEG.F	74.0	81.4	71.8
VMSTM	VOL DRY GAS-STD COND	NCM	.22	.20	.16
VW	TOTAL H2O COLLECTED	ML	42.9	35.0	47.0
VWM	VOL H2O VAPOR-STD COND	NM3	.06	.05	.06
PMOS	PERCENT MOISTURE BY VOL		21.1	19.1	27.9
MD	MOLE FRACTION DRY GAS		.789	.809	.721
PCO2	PERCENT CO2 BY VOL, DRY		13.0	13.0	20.0
PO2	PERCENT O2 BY VOL, DRY		3.0	3.0	.5
PCO	PERCENT CO BY VOL, DRY		3.5	3.5	4.7
PN2	PERCENT N2 BY VOL, DRY		80.5	80.5	74.8
MWD	MOLECULAR WT-DRY STK GAS		30.20	30.20	31.22
MW	MOLECULAR WT-STK GAS		27.63	27.87	27.53
CP	PITOT TUBE COEFFICIENT		.850	.850	.850
DPS	AVG STK VELOCITY HEAD	IN.H2O	.004	.004	.003
TSM	AVG STACK TEMPERATURE	DEG.C	95.2	107.2	95.2
NP	NET SAMPLING POINTS		6	6	6
PST	STATIC PRES OF STACK	IN.HG	-0.00	-0.00	-0.00
PS	STACK PRESSURE, ABSOLUTE	IN.HG	29.15	29.12	29.38
VSM	AVG STACK GAS VELOCITY	M/MIN	76.2	76.2	67.6
AS	STACK AREA	IN2	29	29	29
QSM	STK FLOWRATE, DRY,STD CN	NM3/MIN	.9	.9	.7
QAM	ACTUAL STACK FLOWRATE	M3/MIN	1.4	1.4	1.3
PERI	PERCENT ISOKINETIC		84.6	79.8	79.7
EA	PERCENT EXCESS AIR		6	6	-9

DRAFT

DRAFT

TABLE G-8 (Concluded)

NAME	DESCRIPTION	UNITS	4-P	5-P	6-P
	DATE OF RUN		11-04-75	11-04-75	11-04-75
DN	PROBE TIP DIAMETER	IN	.613	.613	.613
TT	NET TIME OF RUN	MIN	30.0	30.0	30.0
PB	BAROMETRIC PRESSURE	IN.HG	29.34	29.34	29.35
PM	AVG ORIFICE PRES DROP	IN.H2O	.050	.135	.147
VM	VOL DRY GAS-METER COND	DCF	4.94	6.35	6.20
TM	AVG GAS METER TEMP	DEG.F	78.7	82.4	79.8
VMSTM	VOL DRY GAS-STD COND	NCM	.13	.17	.17
VW	TOTAL H2O COLLECTED	ML	46.5	86.5	64.0
VWM	VOL H2O VAPOR-STD COND	NM3	.06	.12	.09
PMOS	PERCENT MOISTURE BY VOL		31.6	40.3	33.7
MD	MOLE FRACTION DRY GAS		.684	.597	.663
PCO2	PERCENT CO2 BY VOL, DRY		20.0	20.0	20.0
PO2	PERCENT O2 BY VOL, DRY		.5	.5	.5
PCO	PERCENT CO BY VOL, DRY		4.7	4.7	4.7
PN2	PERCENT N2 BY VOL, DRY		74.8	74.8	74.8
MWD	MOLECULAR WT-DRY STK GAS		31.22	31.22	31.22
MW	MOLECULAR WT-STK GAS		27.04	25.90	26.77
CP	PITOT TUBE COEFFICIENT		.850	.850	.850
DPS	AVG STK VELOCITY HEAD	IN.H2O	.003	.002	.002
TSM	AVG STACK TEMPERATURE	DEG.C	118.8	129.9	136.8
NP	NET SAMPLING POINTS		6	6	6
PST	STATIC PRES OF STACK	IN.HG	-0.00	-0.00	-0.00
PS	STACK PRESSURE, ABSOLUTE	IN.HG	29.34	29.34	29.35
VSM	AVG STACK GAS VELOCITY	M/MIN	67.1	61.0	61.0
AS	STACK AREA	IN2	29	29	29
QSM	STK FLOWRATE, DRY,STD CN	NM3/MIN	.6	.5	.5
QAM	ACTUAL STACK FLOWRATE	M3/MIN	1.2	1.1	1.1
PERI	PERCENT ISOKINETIC		69.8	115.3	103.7
EA	PERCENT EXCESS AIR		-9	-9	-9

DRAFT

DRAFT

DRAFT

APPENDIX H

COMPUTATION FOR ISOKINETIC SAMPLING

DRAFT

DRAFT

$$PERI = \frac{(1{,}032)\ (TS + 460)\ (VMSTD)}{(VS)\ (TT)\ (PS)\ (MD)\ (DN)^2} \quad \underline{a}/$$

$$VMSTD = \frac{(17.71)\ (VM)\ (PB + \frac{PM}{13.6})}{(TM + 460)} \quad \underline{a}/$$

$$MD = \frac{100 - PMOS}{100} \quad \underline{a}/$$

where:

PERI = percent isokinetic sampling rate

TS = stack temperature (°F)

VMSTD = volume dry gas sampled, standard conditions (dscf)

VS = stack gas velocity (fpm)

TT = net sampling time (min)

PS = stack pressure, absolute (in. Hg)

MD = mole fraction, dry gas

DN = probe tip diameter (in.)

VM = volume dry gas sampled, meter conditions (dcf)

PB = barometric pressure (in. Hg)

PM = orifice pressure drop (in. H_2O)

TM = meter temperature (°F)

PMOS = percent stack gas moisture, by volume

---

a/ From Federal Register.[1/]

DRAFT

DRAFT

$$PERI = \frac{(1{,}032)\ (TS + 460)\ (17.71)\ (VM)\ (PB + \frac{PM}{13.6})}{(VS)\ (TT)\ (PS)\ (MD)\ (DN)^2\ (TM + 460)}$$

$$VM = \frac{(PERI)\ (VS)\ (TT)\ (PS)\ (MD)\ (DN)^2\ (TM + 460)}{(1{,}032)\ (TS + 460)\ (17.71)\ (PB + \frac{PM}{13.6})} \quad \text{as } \frac{PM}{13.6} \ll PB;\ PB \sim PS$$

$$VM = \left[\frac{(PERI)\ (TT)\ (DN)^2}{(1{,}032)\ (17.71)}\right] [(MD)] \left[\frac{(VS)\ (TM + 460)}{(TS + 460)}\right]$$

Known for given test:

PERI = 100

TT = 5

DN

Known for given day:

MD (based on preliminary or previous day)

Known for each stack:

VS

Known for each 5-min sampling period:

TM

TS

Thus for each incremental sampling period, a volume to be sampled can be determined, approximating isolcinetic sampling for each period, stack, and run.

DRAFT

DRAFT

APPENDIX I

TABLE OF METRIC EQUIVALENTS

DRAFT

To convert from	To	Multiply by
inch (in.)	centimeter (cm)	2.540 E-00
foot (ft)	meter (m)	3.048 E-01
square inches (sq in.)	square meters (sq m)	6.542 E-04
square feet (sq ft)	square meters (sq m)	9.290 E-02
cubic inches (cu in.)	cubic meters (cu m)	1.639 E-05
cubic feet (cu ft)	cubic meters (cu m)	2.832 E-02
pounds (lb)	kilograms (kg)	4.536 E-01
pounds per cubic foot (pcf)	kilograms per cubic meter (kg/ cu m)	1.602 E+01
degrees Fahrenheit (°F)	degrees Celsious (°C)	$t_C = \frac{t_F - 32}{1.8}$
British Thermal Units (BTU)	calories (cal)	2.52 E+02
calories per gram per degrees centigrade (cal/g/°C)	joules per gram per degrees centigrade (joules/g/°C)	4.185 E-00

DRAFT

DRAFT