United States
Environmental Protection
Agency

Solid Waste and
Emergency Response
(5305)

EPA530-R-94-001
December 1993

EPA

Report to Congress on Cement Kiln Dust

Methods and Findings

(Graphics not Included on Diskettes)

Printed on Recycled Paper

§3001(b)(3)(C), reach a final Regulatory Determination on the management status of CKD within six months of submission of this Report. The Regulatory Determination requires the Agency only to determine to promulgate regulations under Subtitle C, or determine that Subtitle C is unwarranted. Thus, if RCRA §3004(x) or Option 5 is chosen, EPA would have time beyond six months to promulgate a Final Rule.

Exhibit 2-3

Geographic Distribution of Active Portland Cement Production Facilities in 1991 in the U.S.

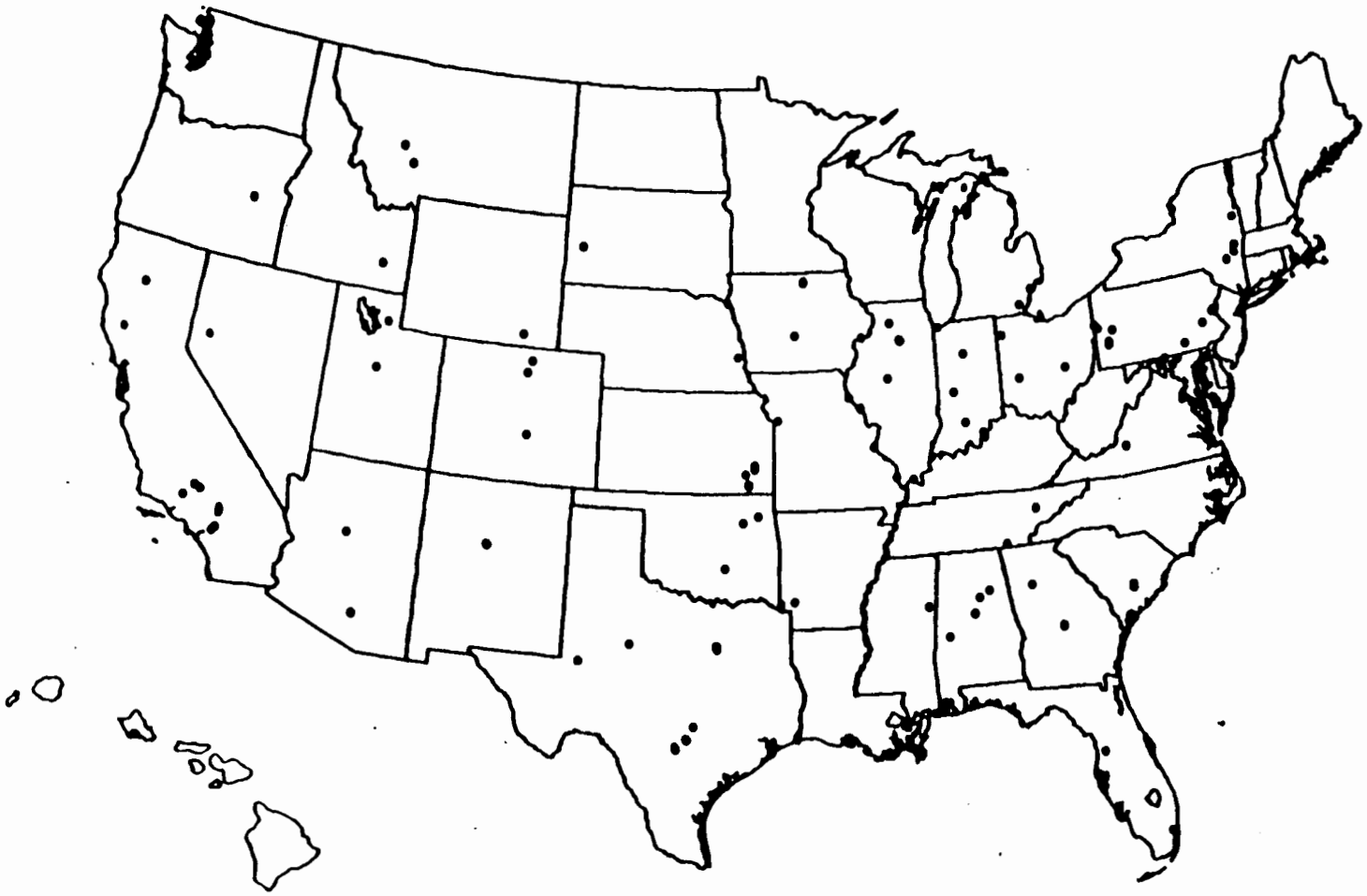

Source: Portland Cement Association, 1992b, *op. cit.*

Exhibit 2-5

Steps in the Manufacture of Portland Cement

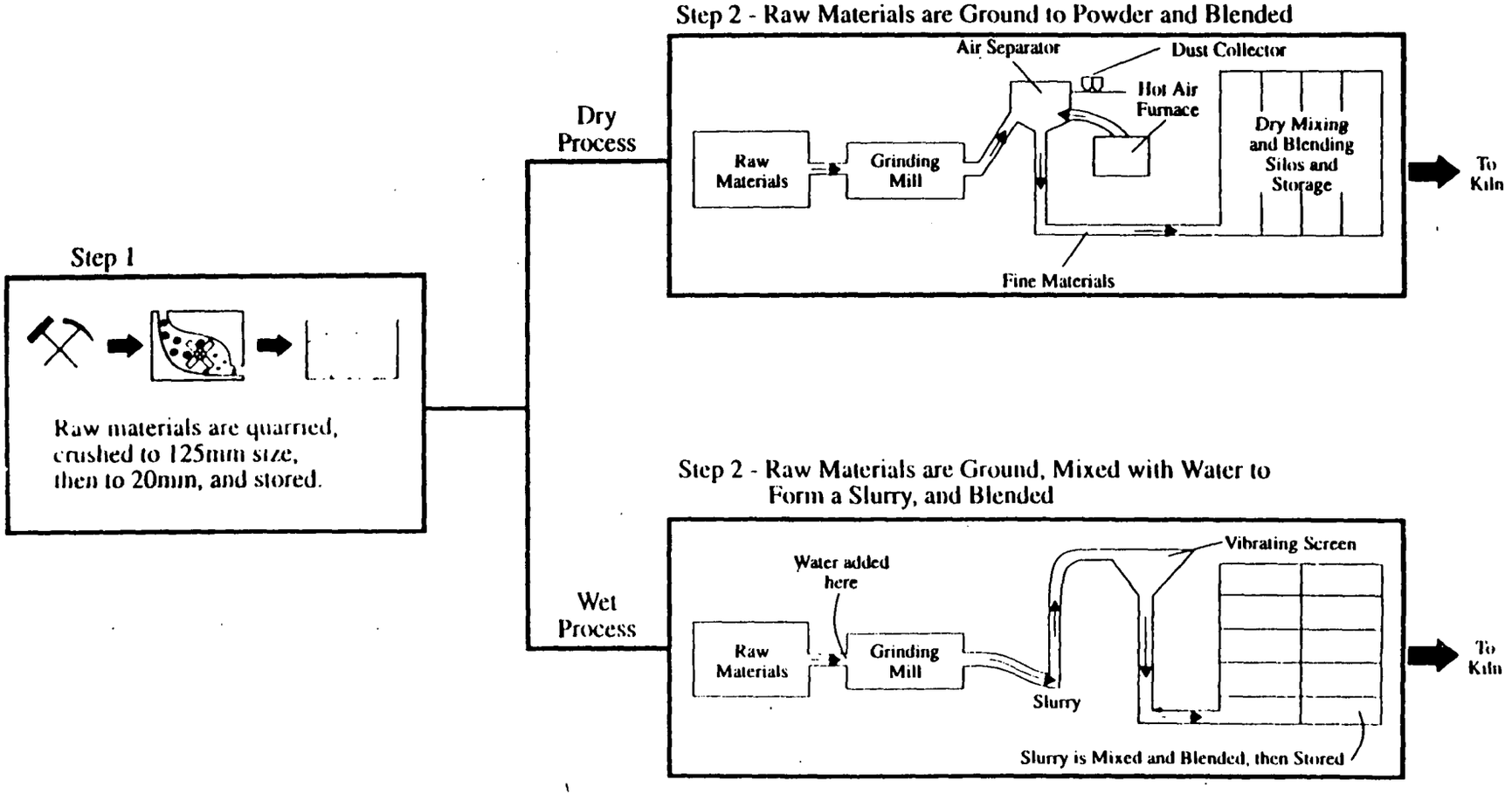

Source: Adapted from Portland Cement Association, 1992. *[An Analysis of Selected Trace Metals in Cement and Kiln Dust.]*

Exhibit 2-5 (continued)

Steps in the Manufacture of Portland Cement

Step 3 - Burning Chemically Changes Raw Mix into Cement Clinker

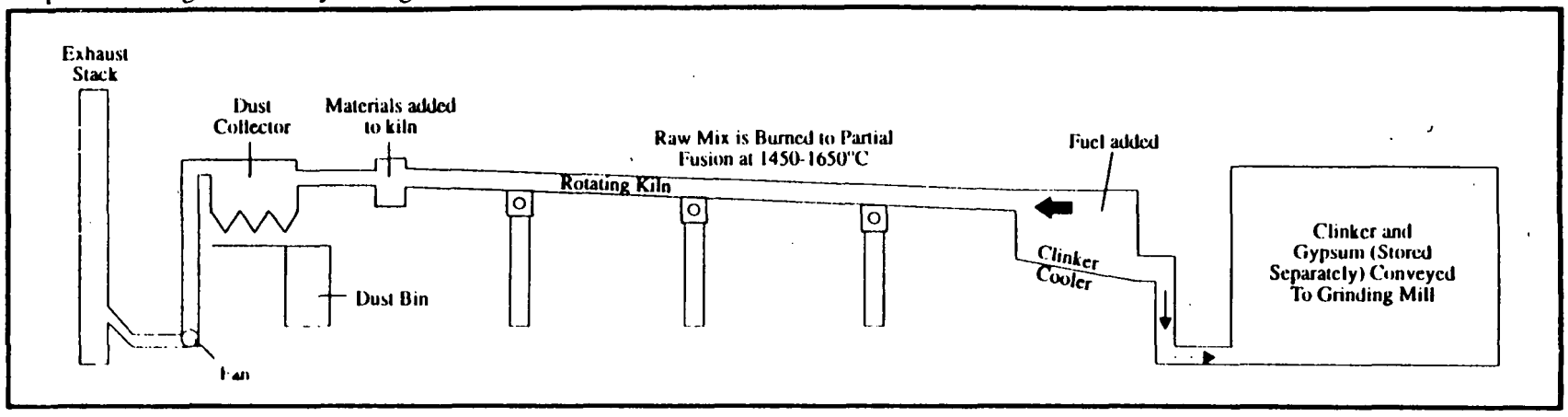

Step 4 - Clinker with Gypsum Ground into Portland Cement

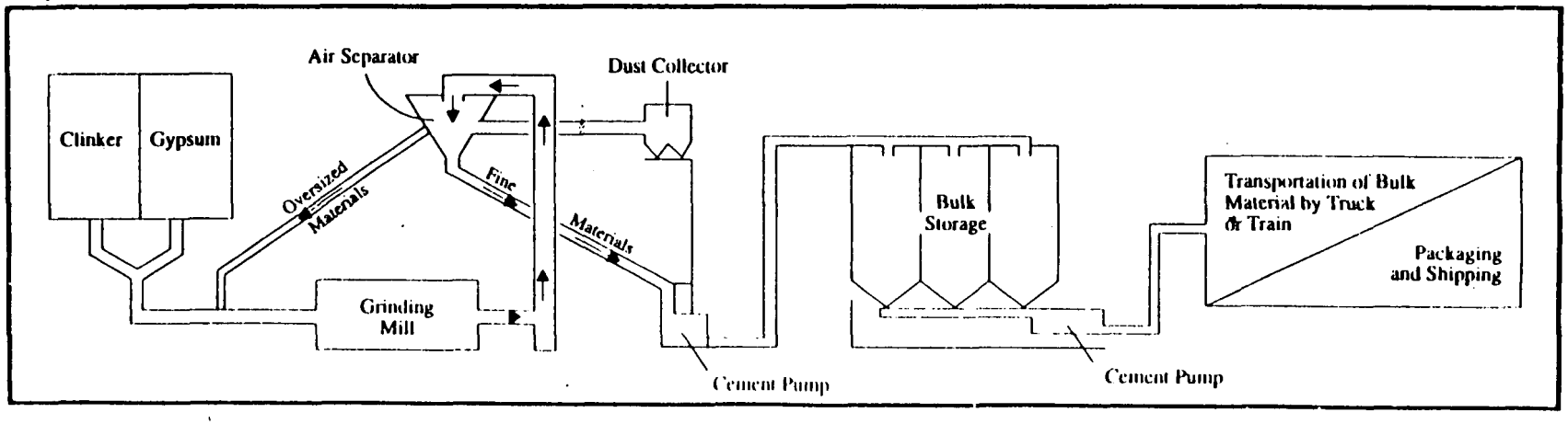

Source: Adapted from Portland Cement Association, 1992 *[An Analysis of Selected Trace Metals in Cement and Kiln Dust.]*

Exhibit 3-3

Schematic Diagrams of Common Types of Air Pollution Control Devices

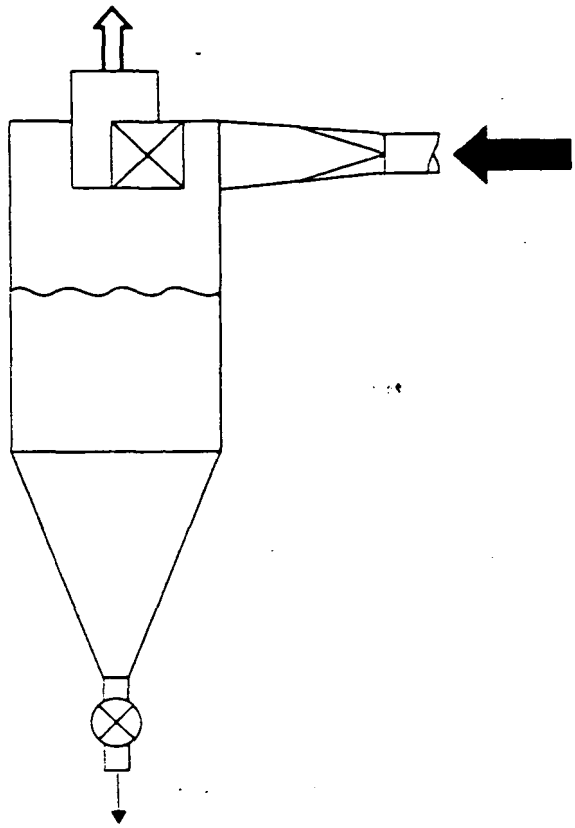

Cyclone Collector

Source: Adapted from Kirk-Othmer, 1979

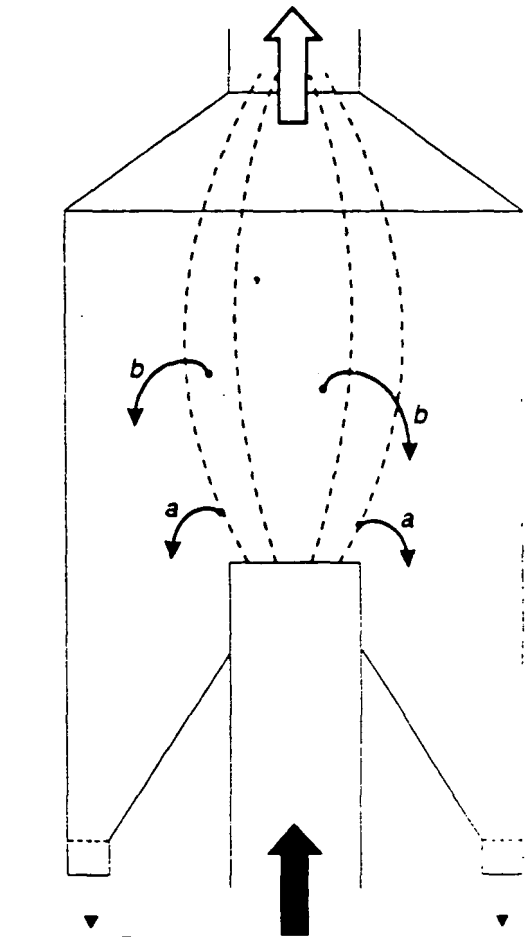

Counter-current Gravity Separator

Source: Adapted from Kohlhaas *et al.* 1983

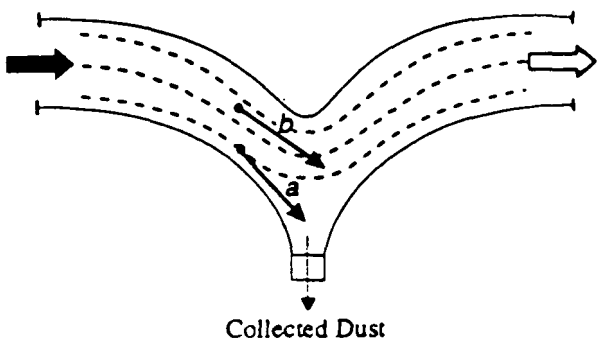

Inertial Separator

Source: Adapted from Kohlhaas *et al.* 1983

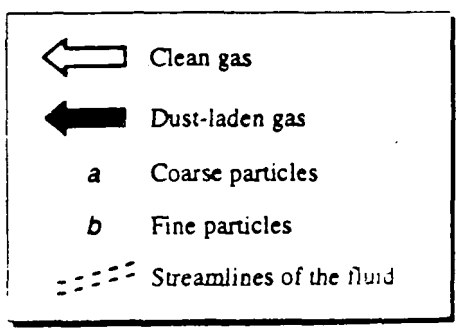

Exhibit 3-3 (continued)

Schematic Diagrams of Common Types of Air Pollution Control Devices

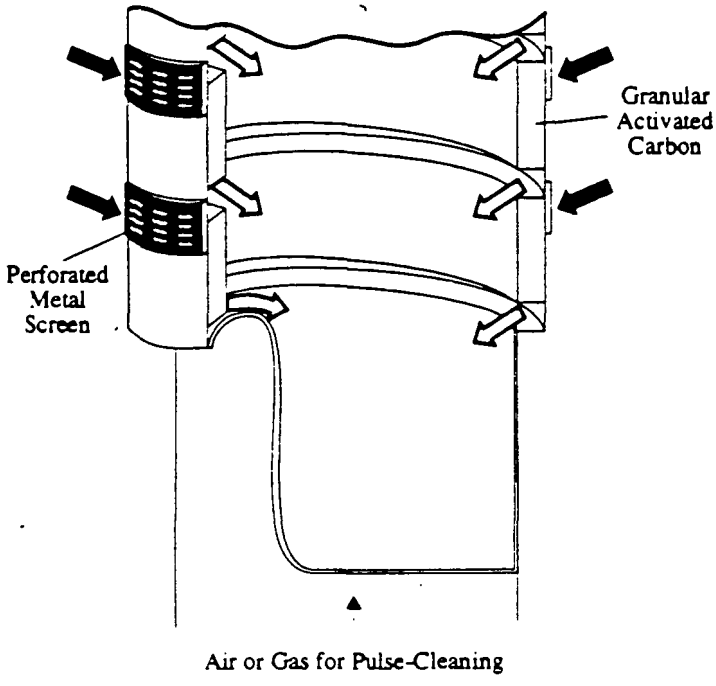

Granular Bed Filter

Source: Adapted from Kirk-Othmer, 1979

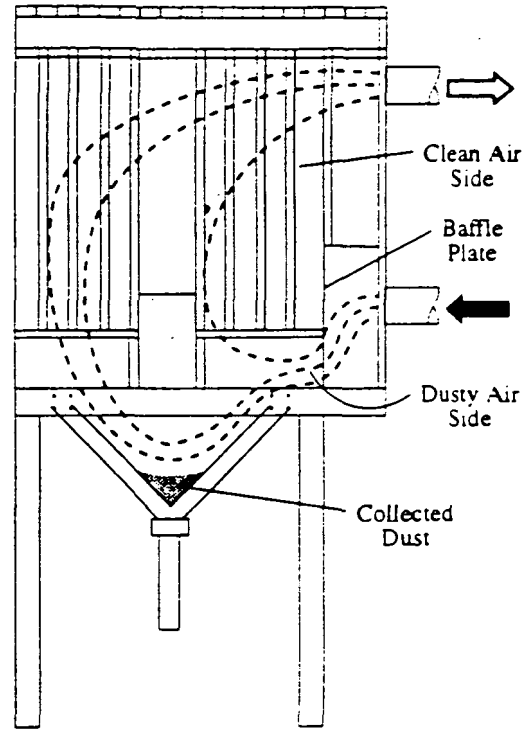

Screen Filter

Source: Adapted from Kirk-Othmer, 1979

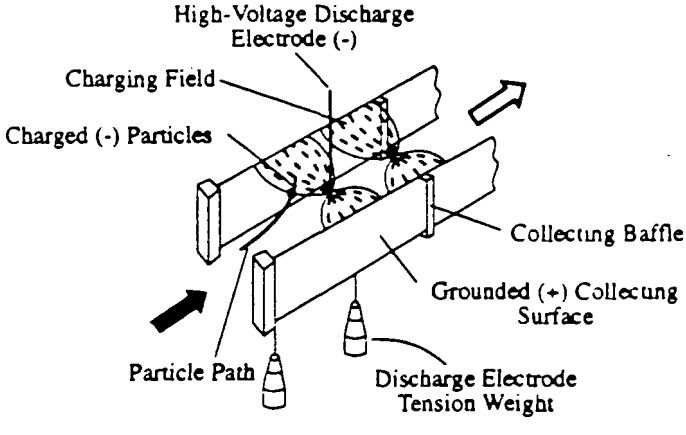

Electrostatic Precipitator

Source: Adapted from Kirk-Othmer, 1979

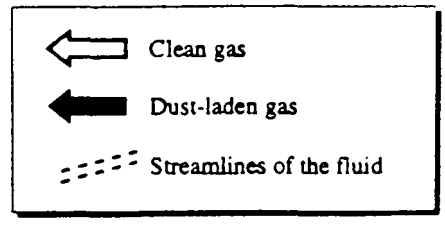

Exhibit 6-1

Overview of Risk Assessment Methodology

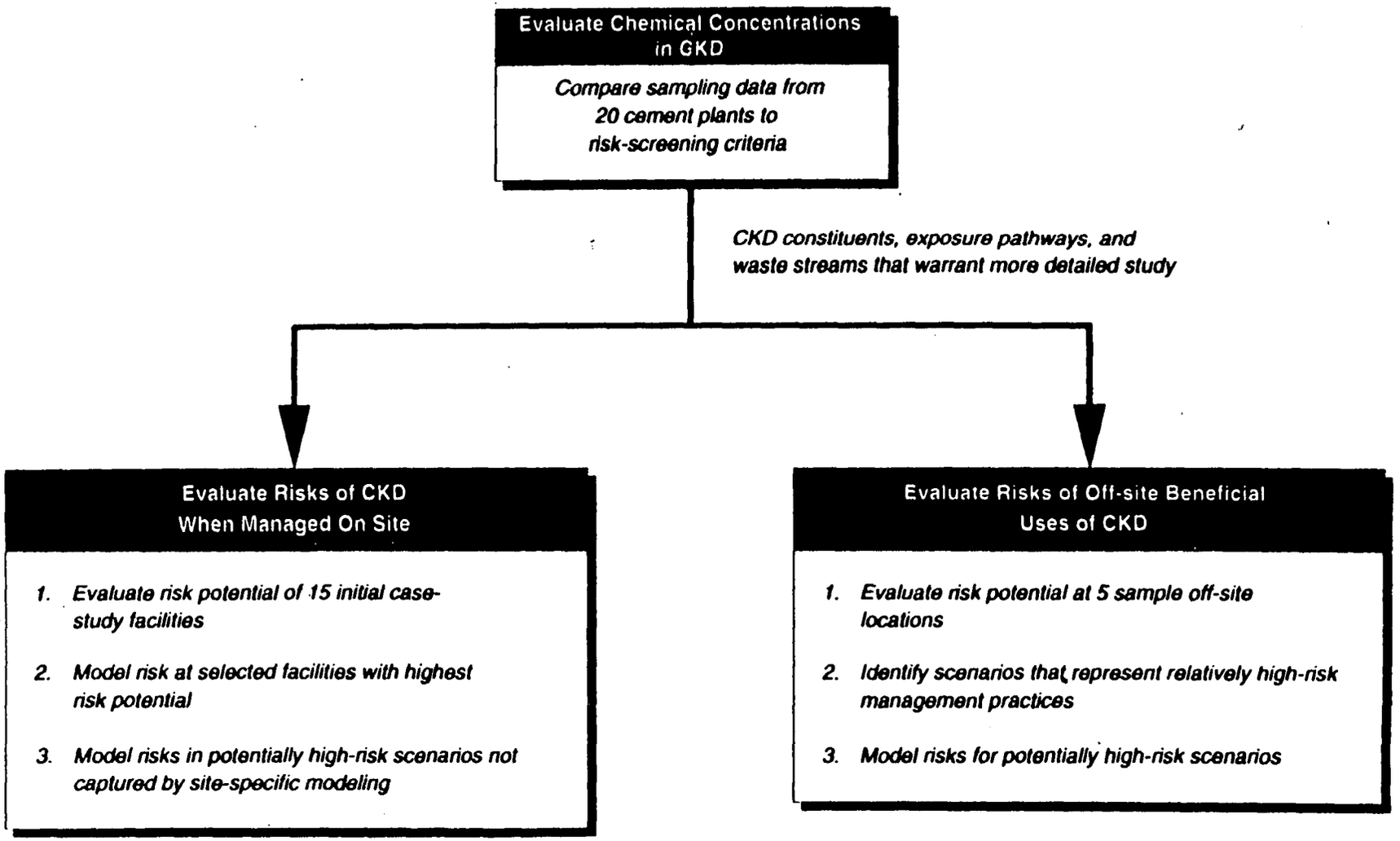

Exhibit 6-5

Site Specific Factors Used to Evaluate Risk Potential of On-Site CKD Management

	Ground Water	Surface Water	Air
Intrinsic Hazard of CKD	1. *Concentration of mobile and persistent chemicals relative to drinking water criteria* 2. *Number of constituents exceeding toxicity criteria*	1. *Concentration of persistent chemicals relative to surface water criteria.* 2. *Number of constituents exceeding toxicity criteria*	1. *Concentration of persistent chemicals relative to air release-off-site exposure criteria* 2. *Number of constituents exceeding toxicity criteria*
Contamination Potential	1. *Ground-water monitoring data* 2. *Area of CKD unit at base* 3. *Availability of water to seep through CKD unit* a. *CKD under water, or* b. *Net recharge* 4. *Containment* 5. *CKD unit type* 6. *Primary unsaturated zone materials underlying management unit* 7. *Depth to ground water*	1. *Surface water monitoring data* 2. *Potential for contamination via stormwater runoff* a. *Containment* b. *Location relative to 100-yr floodplain* c. *Distance to receiving surface water* d. *Intensity of rainfall* e. *Area of CKD unit at base* 3. *Potential for contamination via ground-water discharge* a. *Ground-water contamination potential* b. *Potential for ground water to discharge to surface water* c. *Distance to receiving surface water* 4. *Potential for contamination via airborne release* a. *Air contamination potential* b. *Width of receiving surface water* c. *Distance to receiving surface water*	1. *Ambient air monitoring data* 2. *CKD transported in open-air trucks* 3. *Containment* 4. *Exposed surface area of CKD unit* 5. *Mean annual wind speed* 6. *Ratio of erosion threshold wind speed to fastest speed wind* 7. *Precipitation-evaporation index* 8. *Number of days per year with ≥ 0.01 inch of precipitation*
Transport Potential	1. *Lateral containment (slurry walls)* 2. *Potential for ground water to discharge directly to surface water* 3. *Karst or fault area* 4. *Distance from unit to downgradient property boundary* 5. *Distance from unit to nearest existing downgradient residence*	1. *Surface water dilution potential* 2. *Distance from potential point of release to surface water to potential point of use by people*	1. *Distance from CKD unit to nearest property boundary* 2. *Distance from CKD unit to nearest existing residence*
Exposure Potential	1 *Ground water presently used* 2 *Population within one mile downgradient*	1. *Ecological sensitivity* 2 *Present human uses of surface water*	1. *Number of existing residences within one mile of property boundary* 2. *Surrounding land uses*

Exhibit 6-10

Graphical Illustration of On-site Risk Modeling Scenarios

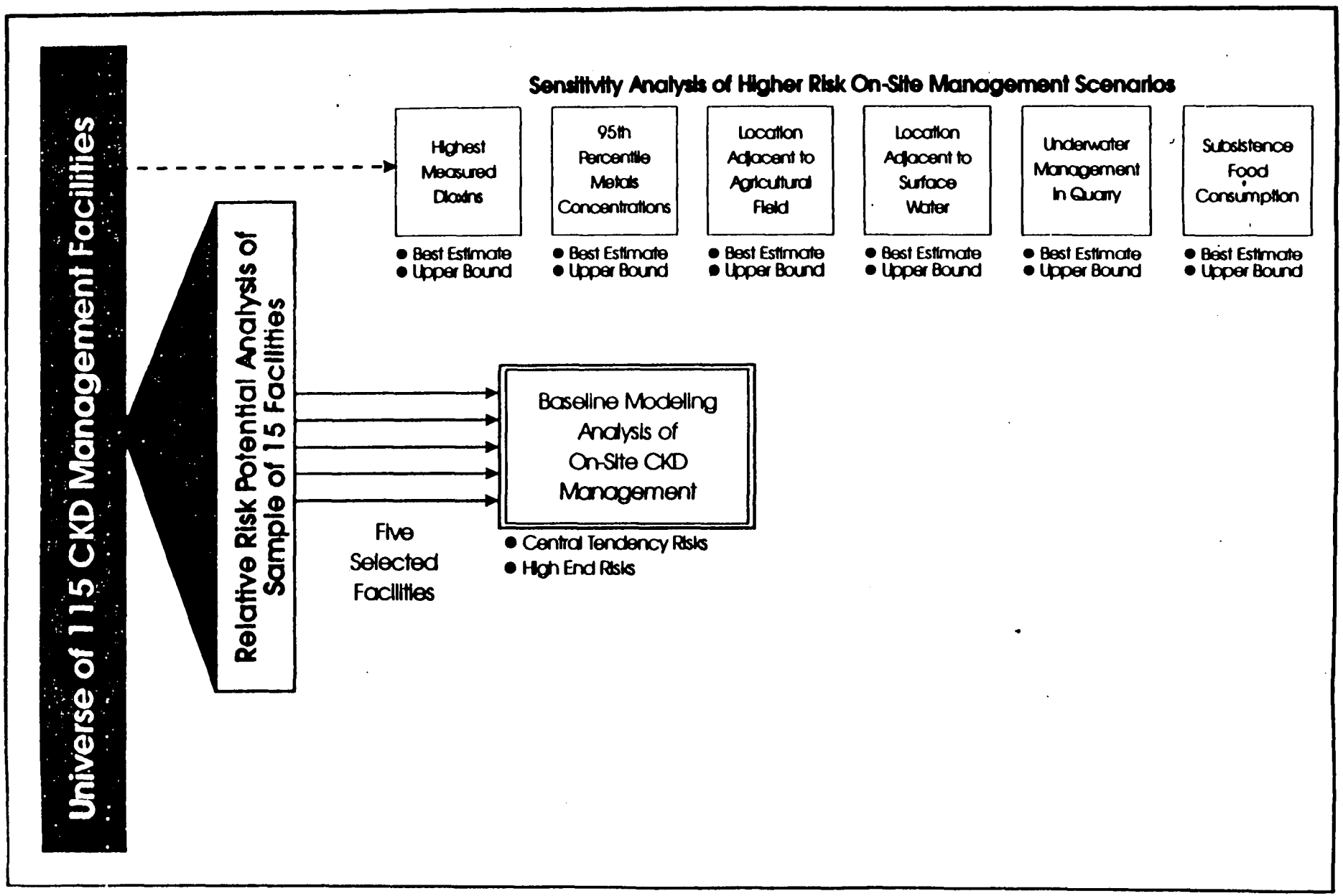

Exhibit 8-2

Process Flow Diagram of Recovery Scrubber

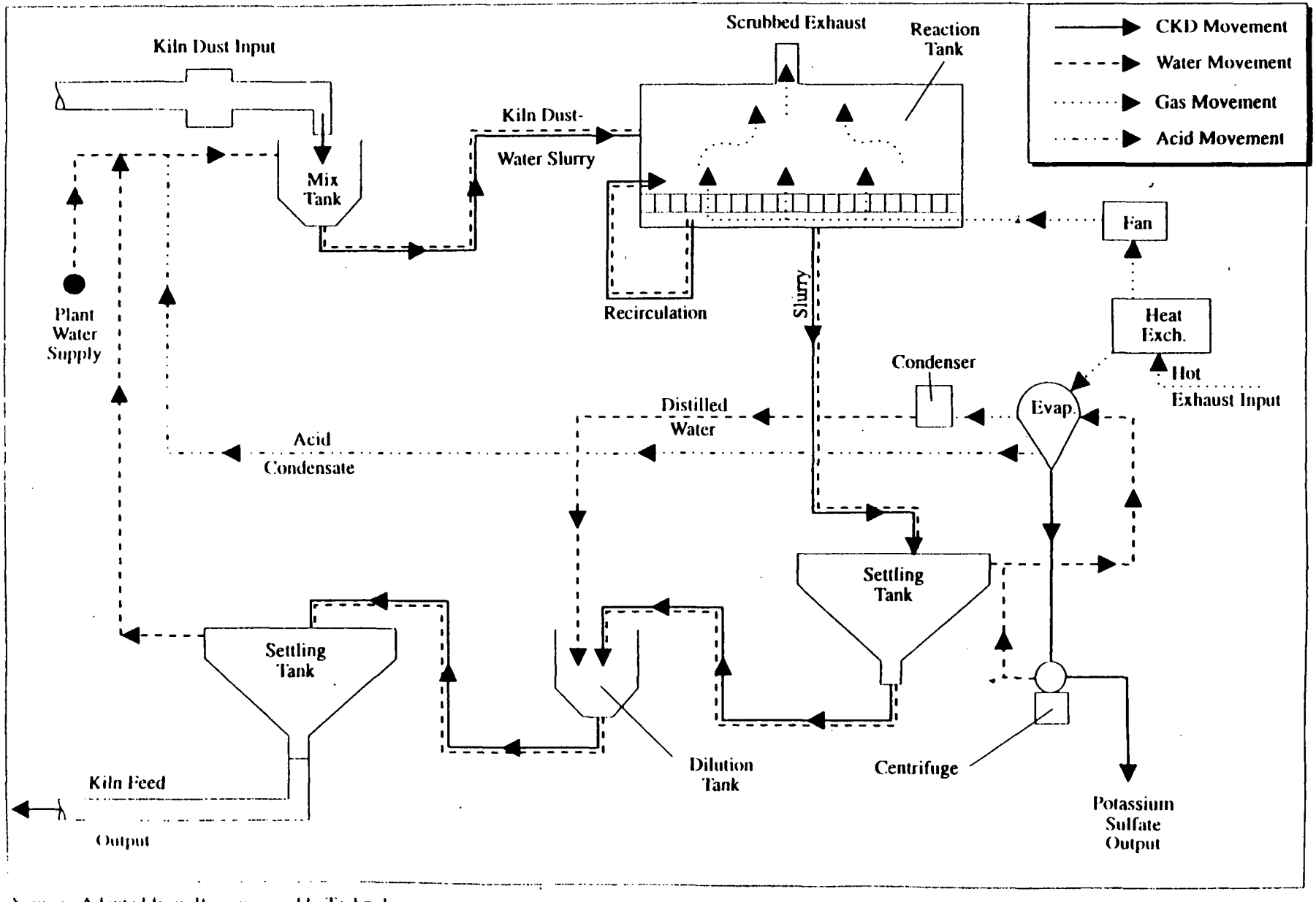

Source: Adapted from Passamaquoddy Technology

Exhibit 8-3

Process Flow Diagram of Fluid Bed Dust Recovery Process (With Heat Recovery System)

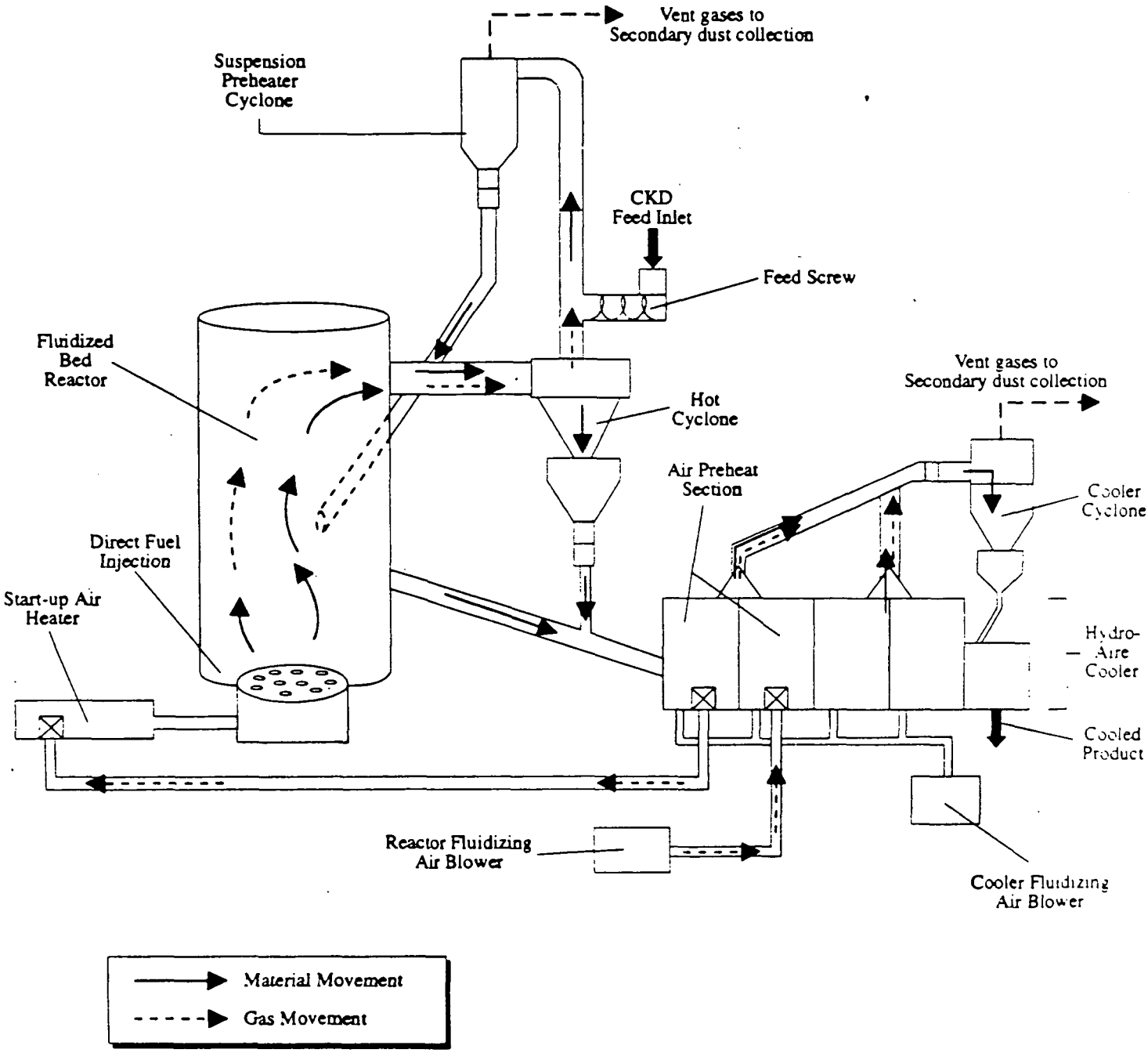

Source: Adapted from Fuller Company

CONTENTS

REPORT TO CONGRESS ON CEMENT KILN DUST

Volume II: Methods and Findings **Page**

LIST OF ACRONYMS

CHAPTER ONE: INTRODUCTION 1-1

1.0 PURPOSE AND SCOPE 1-1

1.1 GENERAL METHODS AND INFORMATION SOURCES 1-2

1.1.1 General Analytical Methods 1-3

1.1.2 EPA Data Collection Activities 1-3

A. 1991 Portland Cement Association (PCA) Survey of Cement Kiln Facilities 1-3
B. 1992 and 1993 CKD Sampling and Analysis 1-3
C. Damage Case Collection 1-4
D. EPA Site Visits 1-4
E. RCRA §3007 Waste and Site Characteristics Data Request 1-5

1.2 EPA'S DECISION MAKING RATIONALE 1-5

1.3 CONTENTS AND ORGANIZATION OF REPORT 1-7

CHAPTER TWO: CEMENT INDUSTRY OVERVIEW 2-1

2.0 INTRODUCTION AND DESCRIPTION OF CKD 2-1

2.1 CEMENT INDUSTRY STRUCTURE AND CHARACTERISTICS 2-1

2.1.1 What Is Cement? 2-1

2.1.2 The Cement Industry 2-5

2.2 CEMENT MANUFACTURING 2-9

2.2.1 The Basic Production Process 2-10

Mining 2-10
Crushing 2-10
Grinding and Blending 2-13
Pre-Drying 2-13
Drying and Preheating 2-13
Calcining 2-15
Burning 2-15
Cooling 2-15

CONTENTS (continued)

Volume II: Methods and Findings Page

Finish Milling/Loading 2-16

2.2.2 Kiln Design 2-16

Wet Process Kiln 2-18
Dry Process Kiln 2-19
Preheater Kiln 2-21
Precalciner Kiln 2-23
Semidry Process Kiln 2-23
Trends in Kiln Technology and Use 2-25

2.2.3 Process Inputs 2-26

Raw (Feed) Materials 2-26
Fuels 2-33
Fossil Fuels 2-37
Non-hazardous Waste Fuels 2-39
Hazardous Waste Fuels 2-40
Overview of the Hazardous Waste Fuels Industry 2-40
Extent of Hazardous Waste Consumption by Cement Kilns and Types of Waste Burned 2-41
Hazardous Waste Fuel Technologies 2-42
Relevant Environmental Regulations 2-42

2.3 SUMMARY AND RELEVANCE TO SUBSEQUENT CHAPTERS 2-43

CHAPTER THREE: CKD GENERATION AND CHARACTERISTICS 3-1

3.0 INTRODUCTION 3-1

3.1 CKD GENERATION 3-1

3.1.1 Dust Collection Devices 3-2

3.1.2 Plant-Level CKD Generation Rates 3-2

3.1.3 Quantities and Fate of CKD Generated 3-16

Differences in CKD Generation Rates Across Process Types 3-16
Differences in CKD Generation Rates Across Process Types and Fuel Usage 3-18
Differences in Gross CKD Generation Rates 3-18
Differences in Net CKD Generation Rates 3-19
CKD Recycling 3-19
Recycling Differences 3-21
Differences in Fate of CKD Across Process Types 3-21

CONTENTS (continued)

Volume II: Methods and Findings — Page

Differences in Fate of CKD Across Process Types and Fuel Usage 3-22

3.2 CKD GROSS CHARACTERISTICS 3-25

3.2.1 Physical Characteristics 3-25

3.2.2 Bulk Chemical Characteristics 3-29

3.3 CKD TRACE CHARACTERISTICS 3-30

3.3.1 EPA Sampling Program 3-30

3.3.2 Total Concentrations 3-32

Metals 3-33
Dioxins and Furans 3-37
General Chemistry 3-41
Volatile Organics 3-41
Semi-Volatile Organics 3-44
Pesticides 3-44
PCBs 3-45
Radionuclides 3-45

3.3.3 Leachable Concentrations 3-47

Metals 3-47
Dioxins and Furans 3-50
General Chemistry 3-50
Volatile Organics 3-50
Semi-Volatile Organics 3-50
Pesticides 3-52
PCBs 3-52
Radionuclides 3-52

3.4 STATISTICAL ANALYSES OF CKD CHARACTERIZATION RESULTS 3-53

3.4.1 Metals 3-53

3.4.2 Dioxins and Furans 3-61

3.5 CLINKER CHARACTERISTICS 3-62

CHAPTER FOUR: CURRENT MANAGEMENT PRACTICES FOR CKD 4-1

4.0 INTRODUCTION 4-1

CONTENTS (continued)

Volume II: Methods and Findings — **Page**

4.1 ON-SITE LAND DISPOSAL 4-1

4.1.1 Landfills 4-2

4.1.2 Piles 4-2

4.1.3 Ponds 4-2

4.1.4 Dimensions 4-3

4.1.5 Codisposal 4-3

4.1.6 Remaining Useful Life 4-3

4.2 POTENTIAL EXPOSURE PATHWAYS 4-4

4.2.1 Ground Water 4-5

4.2.2 Surface Water 4-6

4.2.3 Air 4-6

4.3 ENVIRONMENTAL PROTECTION PRACTICES 4-7

4.4 BENEFICIAL USE OF CKD 4-9

4.4.1 Waste Stabilization 4-10

4.4.2 Soil Amendment (Fertilizer) 4-12

4.4.3 Liming Agent 4-12

4.4.4 Materials Additive 4-12

4.4.5 Road Base 4-13

4.4.6 Other Uses 4-13

CHAPTER FIVE: DOCUMENTED DAMAGES FROM MANAGEMENT OF CKD 5-1

5.0 INTRODUCTION AND METHODOLOGY 5-1

"Tests of Proof" 5-1
Identification of Prospective Damage Cases 5-2
Information Collection 5-2
Damage Case Preparation and Review 5-3

CONTENTS (continued)

Volume II: Methods and Findings — Page

Limitations of the Damage Cases 5-3

5.1 OVERVIEW OF FINDINGS, TRENDS, AND CONCLUSIONS 5-4

5.1.1 Findings 5-4

5.1.2 Overall Trends and Conclusions 5-5

5.2 DOCUMENTED GROUND AND SURFACE WATER DAMAGE CASE SUMMARIES 5-9

Cases of Documented Damage 5-9

5.2.1 Holnam Incorporated, Mason City, Iowa 5-9

5.2.2 Lehigh Portland Cement Company, Leeds, Alabama 5-14

5.2.3 Lehigh Portland Cement Company, Mason City, Iowa 5-17

5.2.4 Portland Cement Company, Salt Lake City, Utah 5-22

5.2.5 Southwestern Portland Cement (Southdown, Inc.), Fairborn, Ohio 5-26

5.2.6 National Gypsum Co./Lafarge Corp., Alpena, Michigan 5-32

5.2.7 Ash Grove Cement West, Montana City, Montana 5-34

5.3 CASES OF POTENTIAL DAMAGE TO GROUND AND SURFACE WATER ... 5-37

5.3.1 Texas Industries, Inc., Midlothian, Texas 5-37

5.3.2 Holnam, Inc., Artesia, Mississippi 5-40

5.3.3 Markey Machinery Property, Seattle, Washington 5-41

5.4 DOCUMENTED AIR DAMAGES 5-45

5.5 CKD MANAGEMENT SCENARIOS OF CONCERN 5-49

CHAPTER SIX: POTENTIAL DANGER TO HUMAN HEALTH AND THE ENVIRONMENT 6-1

6.0 INTRODUCTION 6-1

Purpose and Scope 6-1

CONTENTS (continued)

Volume II: Methods and Findings — **Page**

Overview of Approach 6-2

Major Results and Conclusions 6-4

6.1 INITIAL RISK SCREENING 6-6

6.1.1 Approach and Methods 6-6

CKD Composition Data 6-6
Risk-Screening Criteria 6-7
Other Constituent-Specific Factors 6-10

6.1.2 Risk-Screening Results 6-11

6.2 EVALUATION OF RISKS WHEN CKD IS MANAGED ON SITE 6-14

6.2.1 Risk Potential Ranking of Initial Case Studies 6-15

Approach and Methods 6-15
Results of Risk Potential Ranking 6-19
Risk Potential Ranking for the Ground-water Pathway 6-20
Risk Potential Ranking for the Surface Water Pathway 6-23
Risk Potential Ranking for the Air Pathway 6-26

6.2.2 Risk Modeling of On-site CKD Management 6-29

Analytical Methodology 6-29
Release, Fate, and Transport Modeling Methodology 6-32
Characterization of Exposed Populations 6-34
Exposure Assessment and Risk Characterization 6-35
Sensitivity Analysis of Higher Risk Potential Scenarios 6-38
Results of On-site Risk Modeling 6-40
Baseline On-site CKD Management 6-40
Sensitivity Analysis of Potentially Higher Risk Scenarios 6-45

6.2.3 Summary of Risks from On-site CKD Management 6-51

Ground-Water Risks 6-51
Surface Water Risks to Human Health 6-52
Aquatic Ecological Risks 6-52
Air Pathway Risks from Windblown Dust 6-52

6.3 EVALUATION OF RISKS FROM OFF-SITE BENEFICIAL USES OF CKD 6-53

6.3.1 Approach and Methods 6-54

CONTENTS (continued)

Volume II: Methods and Findings — Page

6.3.2 Hazardous Waste Stabilization and Disposal 6-54

6.3.3 Sewage Sludge Treatment and Use 6-56

6.3.4 Building Materials Addition 6-57

6.3.5 Road Construction 6-58

Analysis of Risk Factors 6-58
Risk Modeling Results for Unpaved Traffic Surfaces 6-59

6.3.6 Agricultural Liming 6-60

Analysis of Risk Factors 6-60
Risk Modeling Results for Liming 6-62

6.3.7 Summary of Risks from Off-site Beneficial Uses 6-63

CHAPTER SEVEN: EXISTING REGULATORY CONTROLS ON CKD MANAGEMENT . 7-1

7.0 INTRODUCTION AND METHODS 7-1

7.0.1 Objectives 7-1

7.0.2 Methodology 7-1

7.0.3 Summary of Findings 7-2

7.0.4 Limitations of the Analysis 7-4

7.1 AIR 7-5

7.1.1 Federal Controls 7-5

Clean Air Act 7-5
Implementing Regulations 7-5
State Implementation Plans 7-5
New Source Performance Standards 7-6
Prevention of Significant Deterioration 7-6
Nonattainment Review 7-7
Hazardous Air Pollutants 7-7
Boiler and Industrial Furnace Regulations 7-8

7.1.2 State Controls 7-9

California 7-10

CONTENTS (continued)

Volume II: Methods and Findings **Page**

Ambient Air Quality Standards 7-11
Authority To Construct 7-11
Permit To Operate 7-12
Prevention of Significant Deterioration and New Source Review 7-12
Michigan 7-13
Ambient Air Quality and Permits 7-13
Particulate Matter and Visible Emissions Limitations 7-14
Pennsylvania 7-14
Nonattainment Review 7-15
Particulate Matter and Visible Emissions Limitations 7-15
Texas 7-16
Other Requirements Applicable to Cement Plants 7-16
Special Report on Texas Cement Plants' Excess Emissions 7-18

7.2 WATER 7-18

7.2.1 **Federal Controls** 7-18

The Clean Water Act 7-18
Safe Drinking Water Act 7-20

7.2.2 **State Controls** 7-21

California 7-22
Process Wastewater Requirements 7-23
Water Quality Standards 7-23
Stormwater Management Requirements 7-24
Michigan 7-24
Water Quality Standards 7-25
Ground-Water Protection 7-25
Pennsylvania 7-25
Water Quality Standards 7-26
Ground-Water Protection 7-26
Stormwater Management Requirements 7-27
Texas 7-27
Water Quality Standards 7-28
Ground-Water Protection 7-28
Stormwater Management Requirements 7-29

7.3 SOLID WASTE MANAGEMENT 7-29

7.3.1 **Federal Controls** 7-30

The Resource Conservation and Recovery Act 7-30
Boiler and Industrial Furnace Rule 7-31

CONTENTS (continued)

Volume II: Methods and Findings — Page

Comprehensive Environmental Response, Compensation, and Liability Act 7-32

7.3.2 State Controls 7-32

California 7-33
Michigan 7-36
Pennsylvania 7-37
Texas 7-40

CHAPTER EIGHT: ALTERNATIVE CKD MANAGEMENT PRACTICES AND POTENTIAL UTILIZATION 8-1

8.0 OVERVIEW 8-1

8.1 MINIMIZATION OF CKD REMOVAL FROM THE KILN SYSTEM 8-2

8.1.1 Control of CKD Generation Rates 8-2

8.1.2 Direct Return of CKD to the Kiln 8-3

Return to Flame End 8-5
Return with Raw Feed 8-5

8.1.3 Treatment and Return of CKD to the Kiln 8-6

Pelletizing 8-6
Leaching with Water 8-6
Leaching with a Potassium Chloride Solution 8-8
Alkali Volatilization 8-8
Recovery Scrubbing 8-9
Fluid Bed Dust Recovery 8-13

8.2 BENEFICIAL USE OF REMOVED CKD 8-16

8.2.1 Stabilization of Sludges, Wastes, and Contaminated Soils 8-17

Sewage Sludge 8-17
Oil Sludge 8-21
Acid Waste 8-22
Miscellaneous Wastes and Contaminated Soils 8-23

8.2.2 Soil Stabilization 8-24

8.2.3 Land Reclamation 8-24

CONTENTS (continued)

Volume II: Methods and Findings — Page

8.2.4 Agricultural Applications 8-25

Fertilizer 8-25
Liming Agent 8-28

8.2.5 Livestock Feed Ingredient 8-28

8.2.6 Lime-Alum Coagulation in Water Treatment 8-31

8.2.7 Construction Applications 8-31

Blending with Portland Cement 8-32
CKD as the Only Blending Agent 8-32
CKD as a Co-Blending Agent 8-33
Use as a Road Base Material 8-34

8.2.8 Sanitary Landfill Daily Cover 8-35

8.2.9 Mineral Filler 8-36

8.2.10 Lightweight Aggregate 8-36

8.2.11 Glass Making 8-36

8.3 ON-SITE LAND DISPOSAL 8-36

8.4 SUMMARY AND FINDINGS 8-38

8.4.1 Technical Feasibility 8-43

8.4.2 Human Health/Environmental Considerations 8-44

8.4.3 Economic Feasibility 8-44

8.4.4 Current Extent of Use and Trends 8-45

CHAPTER NINE: COST AND ECONOMIC IMPACTS OF ALTERNATIVES TO CURRENT CKD DISPOSAL PRACTICES 9-1

9.0 INTRODUCTION 9-1

9.1 APPROACH AND METHODS 9-1

9.1.1 Data Sources 9-2

CONTENTS (continued)

Volume II: Methods and Findings — Page

9.1.2 Approach to Estimating Costs and Impacts of CKD Management Alternatives 9-2

Case Study Plants 9-2
Methods for Estimating Facility Costs 9-3
Methods for Extrapolating from the Case Study Sample to the Industry .. 9-4

9.1.3 Cost Accounting Assumptions 9-5

9.1.4 Limitations of the Analysis 9-5

9.2 DESCRIPTIONS AND COSTS OF BASELINE AND ALTERNATIVE CKD MANAGEMENT METHODS 9-6

9.2.1 Current Practices 9-7

Direct Recycling of Collected Dust 9-8
Off-Site Beneficial Use 9-9
Current Land Disposal Practices 9-9

9.2.2 Alternative Land Disposal Practices 9-10

Conventional Subtitle C Technology and Administrative Standards 9-10
Subtitle C Costs (Exclusive of Corrective Action Costs) 9-11
Potential Subtitle C Corrective Action Costs 9-11
Alternative Subtitle C Costs Under RCRA §3004(x) 9-14
Tailored Contaminant Release Controls 9-15

9.2.3 Alternative On-Site CKD Recycling and Recovery Techniques 9-19

Increasing Direct CKD Recycling 9-19
Innovative CKD Recovery Technologies 9-20
Alkali Leaching 9-22
Fluid Bed Dust Recovery 9-26
The Passamaquoddy Technology Flue Gas Desulfurization Process 9-28

9.2.4 Other Operating Practices 9-31

Revised Standards for Cement Products 9-31
Curtailing Use of Hazardous Waste Fuels 9-32

9.2.5 Summary of the Costs of Alternative CKD Management Methods 9-34

9.3 POTENTIAL IMPACTS OF ALTERNATIVE MANAGEMENT PRACTICES ... 9-37

CONTENTS (continued)

Volume II: Methods and Findings — Page

9.3.1 Individual Plant-Level Impacts 9-37

9.3.2 Nationwide Cement Industry Impacts 9-40

9.3.3 Conclusions and Relationships to Regulatory Requirements 9-43

CHAPTER TEN: STUDY FINDINGS AND REGULATORY OPTIONS 10-1

10.1 Study Findings 10-1

10.1.1 Sources and Volumes of Waste (Study Factor 1) 10-1

10.1.2 Waste Management Practices (Study Factors 2 and 8) 10-2

10.1.3 Waste Characteristics and Potential Risks to Human Health and the Environment (Study Factor 3) 10-2

10.1.4 Documented Evidence of Damage (Study Factor 4) 10-4

10.1.5 Potential Costs and Impacts of Subtitle C Regulation (Study Factors 5, 6, and 7) 10-4

10.2 Environmental Justice 10-5

10.3 Recommendations 10-5

10.3.1 Decision Rationale and Options 10-5

10.3.2 Regulatory Options 10-7

10.3.3 Next Steps 10-11

GLOSSARY

BIBLIOGRAPHY

LIST OF EXHIBITS

REPORT TO CONGRESS ON CEMENT KILN DUST

Volume II: Methods and Findings — **Page**

Exhibit 2-1	General Cement Types and Uses	2-2
Exhibit 2-2	1990 Clinker Production by State	2-6
Exhibit 2-3	Geographic Distribution of Active Portland Cement Production Facilities in 1991 in the U.S.	2-7
Exhibit 2-4	U.S. Clinker Capacity for the Period 1973-1991	2-9
Exhibit 2-5	Steps in the Manufacture of Portland Cement	2-11
Exhibit 2-6	Material Temperature Ranges in the Kiln Portion of the Cement Manufacturing Process	2-14
Exhibit 2-7	Typical Energy Requirements for Each Kiln Type	2-18
Exhibit 2-8	Typical Process Flow Diagram for a Wet Process Cement Kiln	2-20
Exhibit 2-9	Typical Process Flow Diagram for a Suspension Flash Preheater Cement Kiln	2-22
Exhibit 2-10	Typical Process Flow Diagram for a Precalciner Coal and Waste Fired Cement Kiln	2-24
Exhibit 2-11	Age and Capacity of Existing Kilns	2-25
Exhibit 2-12	Feed Mixtures in 1990	2-28
Exhibit 2-13	Feed Mixtures in 1985	2-29
Exhibit 2-14	Raw Material Consumption in 1990 and 1985	2-30
Exhibit 2-15	Typical Composition of Raw Materials	2-31
Exhibit 2-16	Typical Feed Mixtures in 1990	2-32
Exhibit 2-17	Cement Kiln Fuel Consumption in 1990 and 1985	2-34
Exhibit 2-18	Cement Kiln Fuel Mixtures in 1990	2-35
Exhibit 2-19	Cement Kiln Fuel Mixtures in 1985	2-36
Exhibit 2-20	Average Coal Composition by Rank	2-38
Exhibit 2-21	Coal Producing Regions of the United States and Coal Types Produced	2-38

LIST OF EXHIBITS (continued)

Volume II: Methods and Findings		Page
Exhibit 2-22	Nominal Fossil Fuel Prices in 1985 and 1990	2-39
Exhibit 2-23	Breakdown of Solid Waste Fuel Consumption	2-40
Exhibit 2-24	Breakdown of Hazardous Waste Fuel Consumption	2-41
Exhibit 3-1	Flow Chart of Gross CKD Management Pathways	3-2
Exhibit 3-2	Air Pollution Control Devices Used at Cement Kilns	3-4
Exhibit 3-3	Schematic Diagrams of Common Types of Air Pollution Control Devices	3-5
Exhibit 3-4	1990 Gross CKD Collection by Different Types of Air Pollution Control Devices	3-7
Exhibit 3-5	Relationship Between Net and Gross CKD Generated in 1990	3-8
Exhibit 3-6	Gross and Net CKD Generated (1990)	3-10
Exhibit 3-7	Share of Net CKD Generated and Clinker Production Capacity (1990)	3-11
Exhibit 3-8	Facilities With High Net CKD Generation Relative to Clinker Capacity	3-12
Exhibit 3-9	Percentages of Gross CKD Recycled, Sold, and Wasted (1990)	3-13
Exhibit 3-10	Recycling Rates Among Facilities That Operate Dry Kilns	3-14
Exhibit 3-11	Recycling Rates Among Facilities That Operate Wet Kilns	3-15
Exhibit 3-12	Average CKD Generation Rates Per Ton of Product (1990)	3-17
Exhibit 3-13	Fate of CKD as a Percent of Gross CKD (1990)	3-23
Exhibit 3-14	Particle Size Distribution of CKD by Process Type	3-26
Exhibit 3-15	Particle Size Distribution of CKD Midwest Portland Cement Company, Zanesville, Ohio	3-27
Exhibit 3-16	Hydraulic Conductivity of Freshly Generated and Managed CKD	3-29
Exhibit 3-17	Typical CKD Bulk Constituents	3-31
Exhibit 3-18	Trace Metal Concentrations in As Generated CKD	3-34

LIST OF EXHIBITS (continued)

Volume II: Methods and Findings		Page
Exhibit 3-19	Trace Metal Concentrations in As Managed CKD	3-36
Exhibit 3-20	Trace Elements Commonly Found in Native Soils	3-37
Exhibit 3-21	Total Concentrations of Dioxins and Dibenzofurans in As Generated CKD	3-39
Exhibit 3-22	Total Concentrations of Dioxins and Dibenzofurans in As Managed CKD	3-40
Exhibit 3-23	Summary of Dioxin and Dibenzofuran Concentrations in CKD	3-42
Exhibit 3-24	Summary of Combined 1992-1993 Dioxin/Furan Sampling Results CKD 2,3,7,8, TCDD Toxicity Equivalence	3-43
Exhibit 3-25	Comparison of Maximum and Average Metals Concentrations in As Generated Dust with TC Standards	3-48
Exhibit 3-26	Comparison of Maximum and Average Metals Concentrations in As Managed Dust with TC Standards	3-49
Exhibit 3-27	TCLP Concentrations of Dioxins and Dibenzofurans in As Generated CKD	3-51
Exhibit 3-28	T-test Comparison of Fuel Burning Effects on Metals Concentrations	3-56
Exhibit 3-29	T-test Comparison of Kiln Type on Metals Concentrations	3-58
Exhibit 3-30	Analytical Results of Clinker Analyses for Inorganics By Fuel Type	3-64
Exhibit 4-1	1991 CKD Waste Management Unit Dimensions	4-3
Exhibit 4-2	Remaining Life of Waste Management Units	4-4
Exhibit 4-3	Typical Cement Plant Layout	4-5
Exhibit 4-4	Environmental Protection Practices at CKD Waste Management Units Active in 1990, by Kiln Fuel Use Type	4-8
Exhibit 4-5	Estimated Off-Site Uses for CKD Sold/Given Away	4-11
Exhibit 5-1	Summary of Cases of Documented and Potential Damage to Human Health and/or Environmental	5-4
Exhibit 5-2	Summary of Documented Water Damages	5-6

LIST OF EXHIBITS (continued)

Volume II: Methods and Findings		Page
Exhibit 5-3	Cases of Potential Damage	5-8
Exhibit 5-4	Site Diagram – Holnam Incorporated, Mason City, Iowa	5-10
Exhibit 5-5	Site Diagram – Lehigh Portland Cement Company, Leeds, Alabama	5-15
Exhibit 5-6	Site Diagram – Lehigh Portland Cement Company, Mason City, Iowa	5-18
Exhibit 5-7	Site Diagram – Lime Creek Nature Center (Lehigh Portland Cement), Mason City, Iowa	5-19
Exhibit 5-8	Site Diagram – Portland Cement Company, Salt Lake City, Utah	5-24
Exhibit 5-9	Site Diagram – Southwestern Portland Cement, Fairborn, Ohio	5-28
Exhibit 5-10	Summary of Exceedances of State Metals Limits Southwestern Portland Cement - Fairborn, Ohio Landfill #6	5-29
Exhibit 5-11	Site Diagram – National Gypsum Co./LaFarge Corp., Alpena, Michigan	5-33
Exhibit 5-12	Summary of Exceedances of State Metals Limits National Gypsum Co./Lafarge Corp., Alpena, Michigan	5-34
Exhibit 5-13	Site Diagram – Ash Grove Cement West, Montana City, Montana	5-36
Exhibit 5-14	Site Diagram – Texas Industries, Inc., Midlothian, Texas	5-38
Exhibit 5-15	Site Diagram – Holnam, Inc., Artesia, Mississippi	5-42
Exhibit 5-16	Site Diagram – Markey Machinery Property, Seattle, Washington	5-43
Exhibit 5-17	Summary of Air Damage Case Findings	5-46
Exhibit 5-18	Example of CKD Disposal Adjacent to an Agricultural Field	5-50
Exhibit 6-1	Overview of Risk Assessment Methodology	6-3
Exhibit 6-2	Basis for Risk-Screening Criteria	6-9
Exhibit 6-3	CKD Constituents That Exceeded Risk-Screening Criteria at EPA Sample Facilities	6-12
Exhibit 6-4	Comparison of 15 Sample Facilities to Other Facilities	6-16
Exhibit 6-5	Site Specific Factors Used to Evaluate Risk Potential of On-Site CKD Management	6-18

LIST OF EXHIBITS (continued)

Volume II: Methods and Findings		Page
Exhibit 6-6	Risk Potential Rankings for the Ground-water Pathway	6-21
Exhibit 6-7	Risk Potential Rankings for the Surface Water Pathway	6-24
Exhibit 6-8	Particle Size Distribution of CKD by Kiln Type	6-27
Exhibit 6-9	Risk Potential Rankings for the Air Pathway	6-28
Exhibit 6-10	Graphical Illustration of On-site Risk Modeling Scenarios	6-31
Exhibit 6-11	Aquatic Ecological Benchmark Levels	6-38
Exhibit 6-12	Baseline On-Site Management Cancer Risks for Direct Exposure Pathways for 15 Case Study Facilities	6-41
Exhibit 6-13	Baseline On-Site Management Cancer Risks for Foodchain Exposure Pathways for 15 Case Study Facilities	6-42
Exhibit 6-14	Constituents Contributing to Adverse Health Effects In On-site CKD Risk Modeling Analysis	6-43
Exhibit 6-15	Results of Central Tendency and High End Ecological Effects Analysis	6-45
Exhibit 6-16	Sensitivity Analysis of Maximum CDD/CDF Cancer Risks for Direct Exposure Pathways	6-46
Exhibit 6-17	Sensitivity Analysis of Maximum CDD/CDF Cancer Risks for Foodchain Exposure Pathways	6-47
Exhibit 6-18	Sensitivity Analysis of Location Adjacent to Agricultural Field for Foodchain Exposure Pathways	6-48
Exhibit 6-19	Sensitivity Analysis of Location Adjacent to Surface Water for Direct and Foodchain Exposure Pathways	6-49
Exhibit 6-20	Sensitivity Analysis of Highly Exposed Individuals for Foodchain Exposure Pathways	6-50
Exhibit 6-21	Off-site Beneficial Uses Examined in the Risk Assessment	6-54
Exhibit 7-1	New Source Performance Standards for Portland Cement Plants	7-7
Exhibit 7-2	Summary of State Air Pollution Controls	7-10
Exhibit 7-3	Summary of State Water Pollution Controls	7-21

LIST OF EXHIBITS (continued)

Volume II: Methods and Findings **Page**

Exhibit 7-4	Summary of State Solid Waste Management Controls	7-33
Exhibit 8-1	Flow Chart of Gross CKD Management Pathways	8-1
Exhibit 8-2	Process Flow Diagram of Recovery Scrubber	8-10
Exhibit 8-3	Process Flow Diagram of Fluid Bed Dust Recovery Process	8-15
Exhibit 8-4	Summary of Alternatives for Minimization of CKD Removal from the Kiln System	8-39
Exhibit 8-5	Summary of Alternatives for Beneficial Utilization of CKD Removed from the Kiln System	8-41
Exhibit 9-1	Facilities Included in the Cost Analysis	9-3
Exhibit 9-2	Subtitle C Disposal Costs	9-12
Exhibit 9-3	Subtitle C-Minus Disposal Costs	9-15
Exhibit 9-4	Tailored Contaminant Release Controls Costs: Continued Sales of CKD for Off-Site Use	9-17
Exhibit 9-5	Tailored Contaminant Release Controls Costs: Curtailed Sales of CKD for Off-Site Use	9-18
Exhibit 9-6	Key Design Conditions for the Nine Case Study Cement Plants	9-23
Exhibit 9-7	Estimated Incremental Net Costs for the Alkali Leaching System	9-25
Exhibit 9-8	Estimated Incremental Net Costs for the Fuller Fluidized Bed System	9-27
Exhibit 9-9	Estimated Incremental Net Costs for the Passamaquoddy Technology Recovery Scrubbing Process	9-30
Exhibit 9-10	Economic Benefits from Burning Hazardous Waste Fuels	9-33
Exhibit 9-11	Total Incremental Annualized Costs of CKD Management Alternatives for EPA Case Study Cement Plants	9-35
Exhibit 9-12	Annualized Incremental Costs of CKD Management Alternatives per Metric Ton of CKD for EPA Case Study Cement Plants	9-36
Exhibit 9-13	Annualized Incremental Costs of CKD Management Alternatives per Metric Ton of Cement for EPA Case Study Cement Plants	9-38

LIST OF EXHIBITS (continued)

Volume II: Methods and Findings **Page**

Exhibit 9-14 **Capital Investment Requirements for Implementing CKD Management Alternatives for EPA Case Study Cement Plants** 9-39

Exhibit 9-15 **Incremental Costs of Alternative CKD Management Practices Relative to Value of Cement Sales (Incremental cost per ton of cement/revenue per ton of cement — cents per dollar of sales)** 9-41

Exhibit 9-16 **Industry Wide Costs of Alternative Management Practices (Cost in $ Million)** 9-42

LIST OF ACRONYMS

ADEM	-	Alabama Department of Environmental Management
APCD	-	air pollution control device(s)
ARARs	-	applicable and relevant or appropriate requirements
ARB	-	Air Resources Board
ASTM	-	American Society for Testing and Materials
AWQC	-	ambient water quality criteria
BACT	-	Best Available Control Technology
BDAT	-	Best Demonstrated Available Technology
BIFs	-	boilers or industrial furnaces
BMPs	-	best management practices
BOM	-	U.S. Bureau of Mines
CDDs	-	Chlorinated Dibenzo-p-dioxins
CDFs	-	Chlorinated Dibenzofurans
CELDS	-	Computer-Aided Environmental Legislative Data System
CERCLA	-	Comprehensive Environmental Response, Compensation, and Liability Act
CKD	-	cement kiln dust
CWA	-	Clean Water Act
DAF	-	dilution and attenuation factor
DOE	-	U.S. Department of Energy
DOT	-	Department of Transportation
DRE	-	destruction and removal efficiency
ESPs	-	electrostatic precipitators
FGD	-	flue gas desulfurization
FHA	-	Federal Highway Authority
FIT	-	Field Investigation Team
FML	-	flexible membrane liner
GAC	-	granular activated carbon
GEMS	-	Graphical Exposure Modeling System
HBLs	-	health-based levels
HDPE	-	high density polyethylene
HSWA	-	Hazardous and Solid Waste Amendments of 1984
IC	-	Information Circular
LCNC	-	Lime Creek Nature Center
LCS	-	leachate collection systems
LDR	-	Land Disposal Restrictions
LOAELs	-	lowest observed adverse effect levels
LPCC	-	Lehigh Portland Cement Company
MCLs	-	Maximum Contaminant Levels
MDNR	-	Michigan Department of Natural Resources
MEI	-	maximum exposed individual
MERA	-	Michigan Environmental Response Act
NAAQS	-	National Ambient Air Quality Standards
NESHAPs	-	National Emission Standards for Hazardous Air Pollutants
NOV	-	Notice of Violation
NPDES	-	National Pollutant Discharge Elimination System
NPL	-	National Priorities List
NSPS	-	New Source Performance Standards
OEPA	-	Ohio Environmental Protection Agency
PCA	-	Portland Cement Association

LIST OF ACRONYMS (continued)

PCBs	-	polychlorinated biphenyls
PCS	-	EPA's Permit Compliance System
PCU	-	Portland Cement Company of Utah
PICs	-	products of incomplete combustion
POTWs	-	publicly owned treatment works
ppm	-	parts per million
PSD	-	Prevention of Significant Deterioration
PVC	-	polyvinyl chloride
RCRA	-	Resource Conservation and Recovery Act
SCS	-	Soil Conservation Service
SDWA	-	Safe Drinking Water Act
SIP	-	state implementation plan
SPLP	-	Synthetic Precipitation Leaching Procedure
SWMUs	-	solid waste management units
TC	-	Toxicity Characteristic
TCLP	-	Toxicity Characteristic Leaching Procedure
TDS	-	total dissolved solids
TEF	-	toxicity equivalent factor
TSDF	-	treatment, storage, or disposal facilities
TSP	-	total suspended particulate
TSS	-	total suspended solids
TWC	-	Texas Water Commission
UBK	-	uptake/biokinetic
UDEQ	-	Utah Department of Environmental Quality
USGS	-	U.S. Geological Survey
VOCs	-	volatile organic compounds
WMUs	-	waste management units
WWTPs	-	wastewater treatment plants

CHAPTER ONE

INTRODUCTION

Section 3001(b)(3)(A)(iii) of the Resource Conservation and Recovery Act (RCRA) excludes cement kiln dust waste from regulation under Subtitle C of RCRA, pending completion of a Report to Congress required by §8002(o) and a determination by the EPA Administrator either to promulgate regulations under Subtitle C or that such regulations are unwarranted (as required by §3001(b)(3)(C)). This report has been prepared by EPA to meet the requirements of §3001(b)(3) and §8002(o) that the Agency study cement kiln dust (CKD) waste generated in the production of cement clinker and prepare a Report to Congress on the findings of the study.

This introductory chapter is organized into four sections. The first section discusses the purpose and scope of this report, while section two presents EPA's general study methods and the major sources of information used in preparing this document. Section three describes the Agency's decision making rationale that will be used in making the final regulatory determination. Finally, section four provides an overview of the content and organization of this report.

1.0 PURPOSE AND SCOPE

On October 21, 1976, Congress enacted RCRA (Pub. L. 94-580). Section 3001 of RCRA mandated that the EPA Administrator "promulgate regulations identifying characteristics of hazardous waste, and listing particular hazardous wastes which shall be subject to the provisions of this subtitle." Section 3004 required the Administrator to promulgate standards applicable to owners and operators of hazardous waste treatment, storage, and disposal facilities.

In response to these requirements, EPA proposed regulations for managing hazardous wastes under Subtitle C of RCRA on December 18, 1978 (43 FR 58946). In this regulatory proposal, EPA proposed to defer most of the RCRA Subtitle C requirements for six categories of wastes, which it termed "special wastes," until information could be gathered and assessed and the most appropriate regulatory approach determined. Special wastes are typically generated in large volumes, are thought to pose less risk to human health and the environment than wastes (to be) regulated as hazardous wastes, and may be inappropriately regulated under the proposed technical requirements implementing Subtitle C. EPA identified CKD waste as one of these "special wastes".[1]

In 1979, Congress began work on reauthorization of RCRA. During the reauthorization process, Rep. Thomas Bevill (Alabama) offered an amendment (now frequently referred to as the Bevill Amendment) which, among other things, modified §3001 to temporarily exempt "cement kiln dust waste" (along with two other categories of waste) from Subtitle C regulation, pending completion of certain studies. On October 12, 1980, Congress enacted the Solid Waste Disposal Act Amendments of 1980 (Pub. L. 96-482), which added §3001(b)(3)(A)(i-iii) (the Bevill Amendment) to RCRA. These amendments also added §8002(o), which required the

[1] The other five proposed "special wastes" specifically identified in the 1978 proposed rule were mining waste; utility waste; phosphate rock mining, beneficiation, and processing waste; uranium mining waste; and oil and gas drilling muds and oil production brines.

Administrator to study the adverse effects on human health and the environment, if any, from the disposal of "cement kiln dust waste," and submit a Report to Congress on its findings. The 1980 amendments also added §3001(b)(3)(C), which requires the Administrator to make a regulatory determination, within six months of the completion of the §8002(o) study, whether or not to regulate CKD waste under Subtitle C of RCRA.

In response to the 1980 RCRA amendments, on November 19, 1980, EPA published an interim final amendment to its hazardous waste regulations to reflect the provisions of the Bevill Amendment (45 FR 76618), which is codified at 40 CFR 261.4(b)(8). Consequently, since that time, CKD has been exempt from Subtitle C of RCRA -- that is, this material has never been regulated as a hazardous waste under federal law.[2]

The purpose of this report is to comply with the Congressional edict and to establish the factual basis for EPA decision making regarding the appropriate regulatory status, under RCRA, of CKD waste. In keeping with the statutory requirements, this report addresses the following eight study factors, as articulated at §8002(o) of RCRA:

(1) The source and volumes of [CKD] generated per year;

(2) Present disposal practices;

(3) Potential danger, if any, to human health and the environment from the disposal of [CKD];

(4) Documented cases in which danger to human health or the environment has been proved;

(5) Alternatives to current disposal methods;

(6) The costs of such alternatives;

(7) The impact of those alternatives on the use of natural resources; and

(8) The current and potential utilization of [CKD].

In addition, the report includes a review of applicable state and federal regulations, so regulatory decisions that derive from the report will avoid duplication of existing requirements.

1.1 GENERAL METHODS AND INFORMATION SOURCES

In preparing this report, EPA has developed industry-wide, and in some cases, facility-specific data and analytical methods that reflect the complexity of the issues that are addressed in this report. The facilities that generate CKD waste vary considerably in size, location, operational aspects, and waste management techniques. Moreover, to examine in detail the

[2] It should be noted here that under the RCRA Subtitle C Boilers and Industrial Furnaces (BIF) Rule, CKD generated by kilns that burn hazardous waste as fuel may be ineligible for Bevill Exclusion under certain conditions (see 40 CFR 266.112).

broad array of study factors mandated by RCRA §8002(o), EPA had to develop approaches and methods that were sufficiently sophisticated to take into account the special nature of CKD. This section outlines the general methods and the data sources that the Agency employed to respond to the statutory study factors, beginning with a discussion of the major data collection initiatives that EPA's Office of Solid Waste (OSW) has conducted during the past three years.

1.1.1 General Analytical Methods

To address the RCRA §8002(o) study factors in a thorough and systematic fashion, EPA has organized this report and conducted its supporting analyses along functional lines. The Agency has combined its examination of certain study factors into groups and has presented its analysis of the others in a logical sequence. For that reason, certain key concepts are addressed in several chapters of the Report, albeit with different emphases. Examples of such cross-cutting issues include CKD composition, cement kiln design and operation, and kiln fuel type.

The specific methods that EPA used to address each of the study factors are described in detail in Chapters 3 through 9. Additional information on the methods used and supporting data are contained in the Background Documents to this Report.

1.1.2 EPA Data Collection Activities

To develop an adequate information base to address the eight study factors, OSW conducted a number of data collection activities. The focus of most of these efforts was site-specific. As a result, EPA was able to compile reasonably detailed industry-wide information, which was used extensively to prepare this report. The major information-gathering initiatives are identified and discussed in the following paragraphs.

A. 1991 Portland Cement Association (PCA) Survey of Cement Kiln Facilities

In December 1991, the Portland Cement Association (PCA) prepared and distributed a written questionnaire to the operators of the 115 cement kiln facilities in the U.S. that EPA believed generated CKD waste. These facilities were identified from information in existing Agency files, information provided by PCA, and from data supplied by the U.S. Bureau of Mines (BOM). The questionnaire was designed to elicit information both on CKD waste generation and management at clinker-producing facilities, and on the operational characteristics of the facilities. The majority of the questions addressed waste management and were ordered so as to "track" CKD from the point of generation through ultimate disposition.

Approximately 80 percent of the facilities that currently generate CKD responded to the questionnaire. PCA has made these survey responses available to the Agency, and hence, to the public record. Responses were entered into a computerized data base, which EPA used in conducting the analyses described below. A description of the survey is contained in the Background Documents to this Report. Copies of the survey instrument, as well as all available non-confidential company responses, may be found in the supporting docket for this report.

B. 1992 and 1993 CKD Sampling and Analysis

Because CKD has not been studied by OSW previously, and because existing facility-specific data on this waste were sparse, EPA conducted a CKD and cement clinker sampling and

analysis program in early 1992. The Agency's field sampling teams visited 15 cement facilities, recorded observations of operational practices, photographed waste management activities, and collected samples. In most cases, EPA sampled both "as generated" and "as managed" CKD.

To clarify certain analytical issues raised by the results of the 1992 sampling and analysis effort (referred to throughout this Report as "Phase I"), EPA conducted a second, more focused CKD sampling and analysis program in May 1993 (referred to as Phase II). The Agency visited and took CKD (and in some cases, clinker) samples from six cement plants (one of which had been visited during Phase I), and performed various chemical analyses. One important distinction between the two sampling and analysis programs is that the analytical methods employed for measuring dioxin and dibenzofuran concentrations in Phase II analysis were far more sensitive than those used in Phase I.

The data developed in EPA's two-phase CKD sampling program is summarized in the supporting docket for this report. A description of EPA's waste sampling study is presented in a Technical Background Document, which may also be found in the docket.

C. Damage Case Collection

To respond to the need to describe "documented cases in which danger to human health or the environment has been proved," (referred to in this report as "damage cases") as directed by RCRA, EPA conducted an exhaustive examination of the extent to which CKD has been implicated in human health or environmental contamination incidents. This effort began by contacting appropriate staff in all EPA regions and states in which one or more cement kiln facilities is located. When available, the information was obtained through the mail or through visits to state/local officials having regulatory jurisdiction over CKD management.

The Agency's damage case analysis is based primarily on documented evidence, rather than on visits to the sites being evaluated. However, the 15 Phase I waste sampling visits included an effort to collect information on the existence of potential environmental pathways through which CKD and its constituents might migrate and cause adverse impacts. The result of this effort is a compilation of information regarding the past and present management practices that have been applied to CKD, and the environmental or human health consequences of these practices.

Damage case findings are presented in Chapter 5 of this report; the individual sites that have been evaluated are listed in a supporting Technical Background Document, which also provides more extensive discussions and supporting evidence.

D. EPA Site Visits

In addition to the waste sampling and damage case collection efforts described above, EPA visited two cement facilities during the summer of 1991 to enhance the Agency's general understanding of CKD generation and management practices. The knowledge and insights gained during these and subsequent sampling visits have enabled the Agency to understand and evaluate current waste management practices, and to draw conclusions and make recommendations regarding the appropriate regulatory status of CKD.

E. RCRA §3007 Waste and Site Characteristics Data Request

To augment existing EPA waste and site characterization data and to allow affected facilities to have meaningful input into the Agency's evaluation of the physical and chemical characteristics of CKD, EPA issued a formal written request, under authority of RCRA §3007, to cement plant operators. The purpose of the request was to obtain any available information on the characteristics of the dust that they generate. In particular, the Agency sought new information on the presence and concentrations of organic constituents in CKD, and patterns of off-site CKD use in productive applications, as well as site-specific environmental characteristics of those plants for which PCA surveys had not been received. The request did not specify the quantity of data required by EPA or a data format, so as to make compliance by the facility operators as simple as possible.

EPA reviewed all data submittals and collected and used the data that are most relevant to the analyses presented in this study.

1.2 EPA'S DECISION MAKING RATIONALE

Based on the analysis of the study factors found at §8002(o), EPA has arrived at preliminary findings that are relevant to the appropriate regulatory status of CKD under RCRA. These findings suggest two general EPA options that were developed through the systematic evaluation process described below. In this process, the Agency considered the study factors in a step-wise fashion. This methodology is consistent with previous Bevill Amendment decisions, such as those made for mineral processing. In applying this framework, EPA used a number of assumptions, which are described in the following paragraph.

The first assumption that the Agency made is that decision criteria were needed so that reasonable decisions regarding the need for additional regulatory controls can be achieved. The second major assumption guiding EPA's decision-making process was that the study factors that are most important in establishing the regulatory status of CKD are 1) the risks posed and documented damages caused by the dust, and 2) the costs and impacts that would be associated with more stringent regulatory controls, if such additional controls were warranted. The reason for this is that in the absence of potential risk and/or documented damages, there is no need for hazardous waste regulation under RCRA Subtitle C (the key issue in question); if greater regulatory controls are needed because of significant potential or documented danger, the costs and impacts of regulatory controls are the critical factor in determining whether a given alternative would lead to the desired outcome (adequate protection of human health and the environment, <u>and</u> continued operation of the affected facilities). EPA also believes that it has developed and analyzed regulatory compliance scenarios that are realistic from an operational and engineering standpoint, and that are likely to be adequately protective of human health and the environment (i.e., could be implemented by facility operators and would result in societal benefits).

Evaluation Criteria

Step 1. Does management of CKD pose human health/environmental problems? Might current practices cause problems in the future?

Critical to the Agency's decision-making process is whether CKD either has caused or could cause human health or environmental damage. To resolve this issue, EPA posed the following key questions:

(1) Has CKD, as currently managed, caused documented human health impacts or environmental damage?

(2) Does EPA's analysis indicate that CKD could pose significant risk to human health or the environment at any of the sites that generate it (or in off-site use), under either current management practices or plausible mismanagement scenarios?

(3) Does CKD exhibit any of the characteristics of hazardous waste?

If the answer to any of these three questions was yes, then EPA would conclude that further evaluation was necessary. If the answer to all of these questions was no, then the Agency would conclude that regulation of CKD under RCRA Subtitle C is unwarranted.

Step 2. Is more stringent regulation necessary and desirable?

If CKD has caused or may cause human health or environmental impacts, then EPA would conclude that an examination of alternative regulatory controls was appropriate. Given the context and purpose of the present study, the Agency focused on an evaluation of the likelihood that such impacts might continue or arise in the absence of Subtitle C regulation, by posing the following two questions:

(1) Are current practices adequate to limit contaminant release and associated risk?

(2) Are current federal and state regulatory controls adequate to address the management of CKD?

If current practices and existing regulatory controls are adequate, <u>and</u> if the potential for actual future impacts is low (e.g., facilities in remote locations), then the Agency would tentatively conclude that regulation of CKD under Subtitle C is unwarranted. Otherwise, further examination of regulatory alternatives was necessary.

Step 3. What would the operational and economic consequences be of a decision to regulate CKD under Subtitle C?

If, based upon the previous two steps, EPA believed that regulation of CKD under Subtitle C might be appropriate, then the Agency would evaluate the costs and impacts of two potential regulatory options. The focus of this inquiry was whether the magnitude and distribution of regulatory compliance costs might jeopardize the continued economic viability of

one or more generators if the waste were to be regulated under the Subtitle C scenario. The key questions in the Agency's decision-making process were as follows:

(1) Are predicted economic impacts associated with the Subtitle C scenario significant for any of the affected facilities?

(2) To what extent could these compliance costs be avoided through the implementation of alternative CKD management practices?

(3) In the event that significant impacts are predicted, might a substantial proportion of domestic capacity or product consumption be affected?

(4) What effects would hazardous waste regulation have upon the viability of the beneficial use or recycling of CKD?

In EPA's judgment, absence of significant impacts would suggest that Subtitle C regulation might be appropriate for CKD if findings indicate that it poses significant risk. If even less stringent Subtitle C standards impose widespread and significant impacts on facilities, and/or deter the safe and beneficial use of the dust, EPA would conclude that regulation under some form of Subtitle D program might be more appropriate.

1.3 CONTENTS AND ORGANIZATION OF REPORT

This Report to Congress consists of two volumes, as follows:

Volume I: Executive Summary

- This volume provides an overview of the methods and data sources used to conduct the study, the technical findings of the study, a description of the regulatory options considered, EPA's conclusions and preliminary recommendations, and a discussion of the next steps the Agency plans to undertake.

Volume II: Methods and Findings

- Chapter 1, **Introduction**, summarizes the purpose and scope of the report, general methods and information sources used, and EPA's decision-making rationale.

- Chapter 2, **Cement Industry Overview**, provides a description of CKD waste, cement industry structure and characteristics, the cement manufacturing process, the types of production processes used, and significant process inputs.

- Chapter 3, **CKD Generation and Characteristics**, describes the generation of CKD, dust collection devices and recycling of dust back to the kiln, and the physical and chemical characteristics of CKD.

- ù Chapter 4, **Current CKD Management Practices**, outlines the range of CKD management practices currently employed at domestic cement plants.

- ù Chapter 5, **Documented Damages from Management of CKD**, provides a discussion of case studies in which it has been shown that currently used CKD management practices have led to documented environmental impairment.

- ù Chapter 6, **Potential Danger to Human Health and the Environment**, presents a discussion of EPA's risk assessment in which the Agency examined inherent hazards posed by CKD, evaluated site-specific risk factors, and performed quantitative transport, fate, and exposure modeling.

- ù Chapter 7, **Existing Regulatory Controls on CKD Management**, reviews applicable federal and state laws and regulations controlling CKD management with respect to the various environmental media.

- ù Chapter 8, **Alternative Management Practices and CKD Utilization**, investigates a variety of alternative management practices for CKD and beneficial uses of CKD removed from the production system, and examines the technical feasibility, human health/environmental considerations, and economic feasibility of each option.

- ù Chapter 9, **Cost and Economic Impacts of Alternatives to Current CKD Disposal Practices**, discusses methods and data sources used, cost modeling results, and analysis of the economic impacts under each of several regulatory and operational scenarios.

- ù Chapter 10, **Study Findings and Regulatory Options**.

Additional documentation regarding the methods, data sources, and assumptions used in preparing this report and the analyses contained herein may be found in the RCRA docket (docket number F-93-RCKA-FFFFF).

CHAPTER ONE

INTRODUCTION

1.0 PURPOSE AND SCOPE 1

1.1 GENERAL METHODS AND INFORMATION SOURCES 2

1.1.1 General Analytical Methods 3

1.1.2 EPA Data Collection Activities 3

A. 1991 Portland Cement Association (PCA) Survey of Cement Kiln Facilities 3

B. 1992 and 1993 CKD Sampling and Analysis 3

C. Damage Case Collection 4

D. EPA Site Visits 4

E. RCRA §3007 Waste and Site Characteristics Data Request 5

1.2 EPA'S DECISION MAKING RATIONALE 5

1.3 CONTENTS AND ORGANIZATION OF REPORT 7

CHAPTER TWO

CEMENT INDUSTRY OVERVIEW

2.0 INTRODUCTION AND DESCRIPTION OF CKD

CKD is a fine-grained solid material generated as the primary by-product of the production of cement. Cement production occurs in very large rotary kilns at high temperatures; finely ground raw material enters and rolls downward from the "cool end" of the kiln, while fuels and combustion air are introduced and drawn upward from the "hot end." This air that is drawn into and through the kiln carries with it some of the finely ground solid raw materials, condensed fuel components, and partially reacted feed. As this air exits the cool end, the entrained solid matter is collected before the air is vented to the atmosphere, through the large gas emission "smokestacks" that are found at all cement production facilities. CKD generation results directly from this control of particulate matter that would otherwise be discharged. In contrast to many other residues of industrial production, CKD is essentially an "off-specification" product; it much more closely resembles the raw materials entering and product leaving the operation than many other industrial solid wastes. The effective control of stack emissions at cement plants has occurred only during the past 30 years or so. Therefore, the generation of CKD as a "solid waste" in significant quantities is a relatively recent phenomenon. Nonetheless, existing stockpiles of this material are quite large at some facilities, and substantial quantities of additional CKD are generated (though not necessarily accumulated) on a continuous basis at all cement plants.

All cement kilns generate CKD, and the quantities and characteristics of the CKD generated depend upon a number of operational factors and characteristics of the inputs to the manufacturing process. A critical examination of CKD management and its impacts cannot be conducted without an understanding of the industry and the basic process of manufacturing cement. Accordingly, this section presents an overview of the cement industry and describes cement types, the basic structure of the cement industry, manufacturing processes, and variations in kiln design. A section on process inputs provides discussion of the characteristics of the raw feed and the fuels used in the manufacturing process. This overview should assist the reader in understanding some of the issues surrounding the chemical characteristics of CKD that are discussed in considerable detail in subsequent chapters of this report. This chapter concludes with a brief summary and "road map" to the remainder of this document.

2.1 CEMENT INDUSTRY STRUCTURE AND CHARACTERISTICS

2.1.1 What Is Cement?

For purposes of this Report to Congress, cement refers to the commodities that are produced by burning mixtures of limestone and other minerals or additives at high temperature in a rotary kiln, followed by cooling, finish mixing, and grinding. This is the manner in which the vast majority of commercially-important cementitious materials are produced in the United States. Cements are used to chemically bind different materials together. The most commonly produced cement type is "Portland" cement, though other standard cement types are also produced on a limited basis. The major cement types and their applications are presented in

Exhibit 2-1. Portland cement is a hydraulic cement, meaning that it sets and hardens by chemical interaction with water and is capable of doing so under

Exhibit 2-1

General Cement Types and Uses

Cement Name	Type	Characteristics	Uses
Normal Portland Cement	I	Non-specialty hydraulic cement	Most structures, pavements, and reservoirs.
Modified Portland Cement	II	Generates less heat from its hydration and is more resistant to sulfate attacks than type I.	Structures having large cross sections, such as large abutments and heavy retaining walls. Also in drainage where a moderate sulfate concentration exists.
High-Early-Strength Portland Cement	III	Allows earlier removal of forms and shorter periods of curing.	When high strengths are required within a few days.
Low-Heat Portland Cement	IV	Generates less heat during hydration than type II. Gains strength more slowly than type I. The tricalcium aluminum content is limited to seven percent.	Mass concrete constructions such as large dams where high temperature rises would create special problems.
Sulfate-Resisting Portland Cement	V	High sulfate resistance cement that gains strength more slowly than type I. The tricalcium aluminate content is limited to a maximum of five percent.	Special cement, not readily available, to be used when concrete is exposed to severe sulfate attack.
Air-Entraining Portland Cements	IA IIA IIIA	Air-entraining agents, interground with the cement clinker, purposely cause air, in minute, closely spaced bubbles, to occur in concrete.	Entrained air makes the concrete more resistant to the effects of repeated freezing and thawing and of the deicing agents used on pavements.
Portland-Blast Furnace Slag Cements	IS IS-A MH MS	Made by grinding granulated high-quality slag with Portland-cement clinker. Type IS cements gain strength more slowly in initial stages, but ultimately have about the same 28-day strength as type I cements.	Air entrainment type is IS-A; Moderate heat-of-hydration type is MH; Moderate sulfate resistance type is MS.
White Portland Cement	N/A	Desirable aesthetic qualities. High in alumina and contains less than 0.5 percent iron.	Architectural and ornamental work.
Portland-Pozzolan Cement	IP IP-A	A blended cement made by intergrinding Portland cement and pozzolanic materials (slaked lime and granulated blast-furnace slag or other material similar to natural lava), without burning.	Used under certain conditions for concrete not exposed to the air. Air entrainment type is IP-A. Covered in ASTM specification C3-40.

Masonry Cement	C91 (ASTM)	Hydraulic cement made by combining either natural or Portland cements with fattening materials such as hydrated lime and, less frequently, with air-entraining admixtures.	Used in place of job cement-lime mixtures to reduce the number of materials handled and to improve the uniformity of the mortar.

Exhibit 2-1 (continued)

General Cement Types and Uses

Cement Name	Type	Characteristics	Uses
Waterproofed Cements	N/A	Produced by grinding with certain soaps and oils.	Sometimes used where a waterproof or water-repellant concrete or mortar is desirable. The effectiveness is limited to three or four feet of water pressure.
Natural Cement	N/A	Manufactured from limestone containing clay, with chemical constituents similar to those of Portland cement.	Sometimes used as common mortar for brick or stonework.

Note: N/A = not applicable
Source: Adapted from Baumeister and Marks, 1968. *Standard Handbook for Mechanical Engineers.*

water.[1] When combined with sand, gravel, water, and other materials, Portland cement forms concrete, the most widely used building material in the world. Portland cement comprises about 90 percent of all hydraulic cement produced, with masonry, lime, and natural cements constituting the remainder. Cement produced and sold in the U.S. must meet specifications established by the American Society for Testing and Materials (ASTM). Five types of Portland cements are covered by ASTM specifications (number C150). Each type requires specific additives or changes in the proportions of the raw material mix to make products for specific applications.

Together, Portland and masonry cement consumption exceeded 69 million metric tons (76 million tons) in 1991,[2] far surpassing the use of all other cement types combined. Seventy-three percent of all U.S. cement is used by the ready mix concrete industry, while 12 percent is used by concrete product producers (pipe, pre-cast, and prestressed), and 5 percent is used by highway contractors. Other users include building materials dealers and other contractors. Most of the Portland cement sold in the U.S. is shipped in bulk form, with less than 5 percent of the total being shipped in bags.[3]

---

[1] American Concrete Institute, 1990. *Cement and Concrete Terminology*, American Concrete Institute Committee 116, publication SP-19 (90), Detroit, Michigan.

[2] Portland Cement Association, 1992a. *U.S. Cement Industry Fact Sheet*, 10th Edition, Market and Economic Research, Skokie, Illinois. April 1992.

[3] U.S. Department of Commerce, 1991. *Cement Industry, U.S. Industrial Outlook 1991*, Washington, D.C.

Portland cement concrete is utilized in a wide variety of construction applications, including houses, offices, roads, sidewalks, playgrounds, and water supply systems. Use in buildings accounts for approximately 60 percent of all cement consumption. Half of this is for residential buildings, approximately 20 percent for commercial buildings, and the remainder for public and farm buildings.[4] Public infrastructure development and maintenance accounts for the remaining 40 percent of cement demand.[5] The majority of public infrastructure applications are for streets and highways, but other important applications include water and waste systems, burial vaults, and oil wells.[6] As discussed in more detail below, cement producing facilities in the United States generally serve local and regional markets.

Portland cement consists of a mixture of synthetic materials or compounds. The four principal compounds are:

- Tricalcium silicate - $(CaO)_3SiO_2$;
- Dicalcium silicate - $(CaO)_2SiO_2$;
- Tricalcium aluminate - $(CaO)_3Al_20_3)$; and
- Tetracalcium-aluminoferrite - $(CaO)_4(Al_2O_3)(Fe_2O_3)$.

Portland cement can be defined as "the product obtained by finely grinding clinker produced by calcining to incipient fusion (i.e., sintering) an intimate and properly proportioned mixture of argillaceous and calcareous materials."[7] Roughly translated, cement is made by sintering a mixture of materials containing lime, silica, alumina, and iron oxide. Typically, these materials include limestone, sand, clay, iron ore, and/or other minerals and mineral processing residues.

Cement production involves heating these raw materials, usually limestone and clay, to approximately 1,482°C (2,700°F) to form a material called "clinker," which is granular and highly variable in size. Clinker is then cooled, and ground with a smaller amount (approximately five percent) of gypsum to make cement. The heating process is performed in a rotary cement kiln, which is a brick-lined cylinder, inclined slightly from the horizontal, that rotates on its longitudinal axis at a slow and constant speed (generally a couple of revolutions per minute). Raw materials are introduced at the higher end, while a fixed combustion source is operated at the lower end. Thus, the raw materials and the heated air (which induces the chemical reactions in the raw feed) travel countercurrent to one another. There are a number of different cement kiln configurations that employ different technologies and equipment, and thus, there is considerable variation in the size and operating characteristics of cement kilns. Nonetheless, cement kilns are all quite large in comparison with most other types of industrial equipment;

---

[4] *Ibid.*

[5] Sanborn, S., 1992. *Cement & Aggregates*, Value Line Publishing. July 24, 1992.

[6] U.S. Department of Commerce, 1991, *op. cit.*

[7] "Portland Cement", Kackman, A.H. and Brown, R.W., Section Editors; *SME Mineral Processing Handbook*, Society of Mining Engineers of the American Institute of Mining, Metallurgical, and Petroleum Engineers, Inc., New York, NY, 1985, Vol. 2, Section 26, pp. 26-1 to 26-52.

typical cement kilns are approximately 152.4 meters (m) long (500 feet) and 3.7 m in diameter,[8] and some are considerably larger. There are two primary types of kiln design: wet process kilns that accept feed materials in slurry form, and dry process kilns that accept feeds in dry, ground form. A more detailed description of the cement production process and its variations is presented in Section 3.2, below.

2.1.2 The Cement Industry

Because cement is used in almost all construction activities, the cement industry is an important part of the nation's economic and industrial base. Figures characterizing the cement industry, such as production, capacity, and consumption statistics, change as a result of fluctuations in domestic construction activities, plant modernizations, economic conditions, and the level of cement imports. In 1991, reported consumption of Portland and masonry cement in the U.S. was 69.3 million metric tons (76.3 million tons), representing the lowest consumption since the early 1980s.[9] The companies that comprise the U.S. cement industry, and the number and location of the plants that they operate are presented in Appendix B-1.

The most recent figures on clinker production are from 1990.[10] In 1990, the domestic cement industry consisted of 43 companies operating 115 clinker-producing plants, consisting of 218 kilns, in 37 states and Puerto Rico. Total domestic clinker production in 1990 was nearly 65.4 million metric tons, comprising an 85.7 percent utilization of the total available capacity of close to 76.2 million metric tons. Dry kilns accounted for approximately 45 million metric tons of this production, representing over 65 percent of the total. The slight dominance in terms of production by dry kilns reflects the recent trend toward greater reliance on this more energy-efficient process.

California was the largest clinker producing state in 1990, followed by Texas, Pennsylvania, Missouri, and Michigan. Exhibit 2-2 presents 1990 clinker production by state. This geographic distribution reflects the regional nature of the industry. Because of the low value-to-weight ratio of cement and the resulting high relative cost of transportation, most cement plants are located within 321.9 kilometers (200 miles) of their principal markets.[11] Therefore, the states with the largest populations and economies, which have enjoyed dynamic construction trends, tend to be the largest cement markets and also the largest cement producers. There has been little change over the past 30 years in terms of the largest cement-consuming states; California, Texas, and Florida have been the leaders throughout this period.

---

[8] Environmental Toxicology International, 1992. *All Fired Up: Burning Hazardous Waste in Cement Kilns*, Seattle, Washington.

[9] Portland Cement Association, 1992b. *U.S. and Canadian Portland Cement Industry: Plant Information Summary 1991*, Market and Economic Research, Skokie, Illinois. August, 1992.

[10] Production statistics for this report were derived from capacity information presented in the 1991 PCA facility survey and capacity utilization data reported by the U.S. Bureau of Mines. For more detailed information on the derivation of these data, refer to Appendix B-2.

[11] The exception to this distance limitation comprises those production facilities that have ready access to water transportation, enabling them to extend their marketing areas through the use of distribution terminals. Although ultimate delivery of cement to the consumer is almost always performed by truck, 90 percent of shipments from production plants to distribution terminals are done by rail and waterway (Environmental Toxicology International, 1992, *op. cit.*)

Exhibit 2-3 presents the geographic distribution of cement plants across the U.S. The location of plants also corresponds roughly to the location of the larger cement markets. California, Texas, and Pennsylvania each had 11 cement facilities in 1990. These larger states contain several distinct markets, each with multiple cement producers supporting the construction requirements of individual metropolitan areas. On the other hand, there are a number of one-plant companies that serve the needs of a particular regional market and a number of states that exist as individual cement markets. In addition, 13 states and the District of Columbia currently have no cement-producing plants and rely upon cement supplies from other (usually adjacent) states. The 13 states are:

Exhibit 2-2

1990 Clinker Production by State

State	Number of Plants	Number of Kilns			Reported Capacity (tons per year)[a]	Reported Capacity Utilization	Calculated Production (tons clinker)
		Wet	Dry	Total			
CALIFORNIA	11	1	19	20	10,389,000	85.0%	8,830,650
TEXAS	11	9	11	20	7,853,940	89.0%	6,990,007
PENNSYLVANIA	11	8	15	23	5,226,000	81.8%	4,274,868
MISSOURI	5	2	5	7	4,158,000	99.8%	4,149,684
MICHIGAN	4	3	6	9	3,866,390	98.6%	3,812,261
ALABAMA	5	0	6	6	4,096,000	74.9%	3,067,904
INDIANA	5	3	6	9	2,794,900	97.4%	2,722,233
NEW YORK	4	4	1	5	2,941,630	86.1%	2,532,743
IOWA	4	2	4	6	2,498,000	99.8%	2,493,004
SOUTH CAROLINA	3	6	1	7	2,493,570	95.5%	2,381,359
ILLINOIS	4	0	8	8	2,265,000	98.4%	2,228,760
FLORIDA	4	5	3	8	2,816,700	71.4%	2,011,124
PUERTO RICO	2	4	2	6	2,188,007	78.8%	1,724,150
MARYLAND	3	2	5	7	1,750,000	93.7%	1,639,750
KANSAS	4	4	7	11	1,737,144	80.4%	1,396,664
OKLAHOMA	3	2	5	7	1,791,000	74.0%	1,325,340
ARIZONA	2	0	7	7	1,640,000	71.6%	1,174,240
OHIO	3	4	1	5	1,507,000	76.0%	1,145,320
VIRGINIA	1	0	5	5	1,100,000	87.9%	966,900
GEORGIA	2	0	3	3	1,082,730	87.6%	948,471
ARKANSAS	2	5	0	5	1,239,000	69.1%	856,149
UTAH	2	2	1	3	853,000	99.7%	850,441
COLORADO	3	1	2	3	1,250,000	66.8%	835,000
TENNESSEE	2	2	1	3	940,000	87.6%	823,440
14 OTHER STATES	15	12	13	25	7,506,400	80.3%	6,027,639
Totals	**115**	**81**	**137**	**218**	**75,983,411**	**85.7%**	**65,117,783**

[a] These numbers have been converted from short tons per year as reported in the source.

Source: Capacity data derived from facility responses to the 1991 PCA Survey, 1992 North American Cement Directory, and the Bureau of Mines 1990 Annual Report on Cement. Utilization data taken from the Bureau of Mines 1990 Annual Report on Cement.

Exhibit 2-3

Geographic Distribution of Active Portland Cement Production Facilities in 1991 in

Source: Portland Cement Association, 1992b, *op. cit.*

Alaska	Minnesota	North Dakota
Connecticut	New Hampshire	Rhode Island
Delaware	New Jersey	Vermont
Louisiana	North Carolina	Wisconsin
Massachusetts		

In 1990 the five largest U.S. cement companies in terms of clinker production were as follows: Holnam, Incorporated; Lafarge Corporation; Lehigh Portland Cement Company; Lone Star Industries; and Southdown, Incorporated. These companies also ranked identically in terms of capacity, with the top five accounting for approximately 39 percent of industry clinker capacity. Clearly, the cement industry is not one with highly concentrated ownership; the five largest producers in many other types of manufacturing industries account for 80 percent or more of the total industry capacity.[12]

Nevertheless, the structure of the domestic cement industry has changed radically over the last 20 years. There are now fewer companies with one- and two-plant operations, and many established cement companies are out of business or have sold off their holdings. In general, the industry has been shrinking in terms of capacity over the last decade. Exhibit 2-4 presents U.S. clinker capacity for the period 1973-1991. Also, foreign ownership of U.S. clinker capacity has increased from 5 percent in the late 1970s to over 70 percent in 1992.[13] Both Holnam Inc. and Lafarge Corporation are foreign owned.[14]

Seasonal cycles are typical in the cement industry. Demand during peak summer months may be three times that of a winter month. Typically, a cement producer will build up inventories during the winter months in anticipation of peak demands during the summer construction period. Trade literature reports that about two thirds of U.S. cement consumption generally occurs during the six month period from May to October.

Historical data document the fact that trends in cement consumption generally follow trends in construction activity. In the past, the cement industry has experienced prolonged cycles in activity over 15 to 20 years, as well as the shorter traditional business cycles.

Imports of cement usually account for a small percentage of total U.S. cement consumption. Historically, cement and clinker importation has been highly cyclical, but still has only accounted for between three and 11 percent of consumption. The 11 percent figure occurred in 1979, and the lower figures generally appear during the later stages of recessionary periods. Higher rates of importation usually occur when plants are operating at full capacity and are still unable to meet consumer requirements. Imports of cement tend to affect domestic coastal markets, like Florida and California, to a greater degree, because in these markets, costly ground transportation of cement product to consumers is not required. Historically, it has been Canada, Japan, Spain, and Mexico that have been

---

[12] Portland Cement Association, 1984. *U.S. Cement Industry - an Economic Report*, Skokie, Illinois. January 1984.

[13] U.S. Department of Commerce, Date Unknown. *Construction Materials Database*, Building Materials and Construction Division, Office of Forest Products and Domestic Construction, International Trade Administration, Washington, D.C.

[14] Portland Cement Association, 1992b, *op. cit.*

Exhibit 2-4

U.S. Clinker Capacity for the Period 1973-1991

Source: Portland Cement Association, 1992b, *op. cit.*

key exporters of cement to the U.S. Exports of U.S. cement are reported to have seldom exceeded 1 percent of total production. Not surprisingly, exports tend to occur when domestic market demand is low relative to foreign markets, and during domestic recessions.

2.2 CEMENT MANUFACTURING

This section provides a more detailed presentation of cement manufacturing, focusing on those aspects that influence the generation and characteristics of CKD. This section begins with a general description of the basic steps common to all cement production processes, followed by a comparison of the different kiln types that are in operation in the U.S., focusing on noteworthy operational differences and industry trends. The section concludes with a discussion of the inputs into the process of manufacturing cement (i.e., raw materials and fuels). The growing use of hazardous waste-derived fuels is an issue that is of growing importance not only to the regulatory status of CKD but to the larger issue of hazardous waste management in the United States.

2.2.1 The Basic Production Process

Although a variety of cement types are produced in the U.S., cement production generally follows a standard series of steps. The focus of this section is on the manufacture of Portland cement, but the basic production steps are common to most other types as well. Portland cement is derived from a combination of calcium (usually in the form of limestone), silica, alumina, iron oxide, and small amounts of other materials. These raw materials are quarried, crushed, ground together, and then burned in rotary kilns at temperatures near 1,482°C (2,700°F). The resulting material (a mixture of marble- to fist-sized pellets and sand-sized particles) is called clinker. The clinker is finely ground into a gray powder and mixed with gypsum to slow down the "setting" (i.e., hardening) of the cement when it is used in concrete.[15] Manufacturers use clinker and specific additives in various proportions to create cements having different properties for specific construction applications. The general manufacturing steps are discussed below in greater detail and are presented schematically in Exhibit 2-5.

Typical Portland cement consists largely of limestone, clay and/or shale, and a small amount of gypsum and other minerals, such as iron ore, sand, or bauxite. Most of these mineral inputs into the production of cement are quarried on site, ground and blended, then fed into a kiln system. The type of Portland cement being produced determines the specific proportions of these raw materials. High levels of impurities in the raw feed may cause operational problems in the kiln, and/or produce inferior cement. A more detailed discussion of the differences in raw material types and composition and their effects is presented in Section 2.2.3.

Mining

Material mined for cement production consists primarily of limestone. Mining usually occurs in open quarries, although underground mining has been used in the past. During a typical surface mining operation, shovels or bulldozers remove overburden, rock is blasted, and front-end loaders or power shovels load the blasted rock into trucks or railroad cars.[16] The size of the mined rock is up to one meter in diameter. The rock is transported to the crushing plant located in the quarry or at the cement plant. Overburden, or waste rock, is often disposed on site in or adjacent to the quarry.[17] Overburden has also been used for riprap and fill material or sold as aggregate for concrete or road base use.[18]

Crushing

Once removed, the raw material (e.g., limestone) is crushed to a smaller size. The type of crusher used is dependent on the nature of the rock (e.g., hardness, lamination, and quarry

---

[15] Portland Cement Association, 1984, *op. cit.*

[16] Not all quarries mine by blasting hard rock. In the Southeastern U.S., draglines are used to break up and load semi-consolidated material.

[17] Muelberg, P.E., *et al.*, 1977. *Industrial Process Profiles for Environmental Use: Chapter 21, The Cement Industry*, U.S. Environmental Protection Agency, Office of Research and Development, Industrial Environmental Research Laboratory, Cincinnati, Ohio. February 1977.

[18] Johnson, W., 1992. *Cement, Annual Report 1990*, U.S. Bureau of Mines, Washington, D.C. April 1992.

product size). Common crusher types include: gyratory, jaw, and roll crushers and hammer and impact mills.

Exhibit 2-5

Steps in the Manufacture of Portland Cement

Exhibit 2-5 (continued)

Steps in the Manufacture of Portland Cement

Typically, a primary crusher reduces the rock from power shovel size to 0.1 to 0.25 meter (0.328 to 0.82 feet) in diameter and a secondary crusher reduces the product to 0.01 to 0.05 meters in diameter. This material is then conveyed with other raw materials to the grinding and blending step. Partial drying of rock is sometimes accomplished during the crushing process by passing furnace-heated air, clinker cooler exhaust air, or kiln exhaust gases through the crusher.[19,20]

Grinding and Blending

In general, during the grinding process crushed raw material is fed into the grinding mill, ground to a fine size range, and blended to obtain the correct composition for kiln feed. This material is commonly referred to as raw mix or raw meal. In the dry process, ground and blended materials are usually conveyed to a pre-drying step before being fed to the kiln. In the wet process, the raw materials are mixed with about 30 to 40 percent water during grinding or blending to form a well-homogenized slurry. Low concentrations of slurry thinners may be added, such as sodium carbonates, silicates, and phosphates, as well as lignosulfates and modified petrochemicals.[21,22]

Pre-Drying

In the dry process, raw materials must be dried before they are fed into the kiln. The moisture content of the ground raw materials is usually three to eight percent, but may reach 20 percent. Drying reduces moisture content to less than one percent. Ground stone is usually dried with furnace-heated air, clinker cooler exhaust air, or kiln exhaust gases in a cylindrical rotary dryer.[23]

Drying and Preheating

Within the kiln system, different chemical reactions and phase formations occur that are defined by specific temperature ranges of the feed material. Exhibit 2-6 shows the various reaction zones and the raw material temperatures in a typical rotary kiln.

The drying and preheating zone is where the first true thermal treatment occurs within the kiln system. In some kiln configurations (e.g., in wet kilns) this zone is located in the cool end of the kiln, while in others it resides in the preheater or precalciner. In any case, the following three sequential processes occur in this zone: evaporating all free water (material

---

[19] Sapp, J.E., 1981. *Energy and Materials Flows in the Cement Industry*, prepared for U.S. Department of Energy, June 1981.

[20] Muelberg, *et al.*, 1977, *op. cit.*

[21] Sapp, 1981, *op. cit.*

[22] Kirk-Othmer, 1979. Cement, *Kirk-Othmer Encyclopedia of Chemical Technology*, Volume 5, John Wiley and Sons, New York, New York.

[23] Muelberg, *et al.*, 1977, *op. cit.*

temperature 100°C); dehydrating clay minerals (material temperature beginning at 549°C); and increasing the feed temperature to the calcining temperature (material temperature 804°C).[24]

[24] Peray, K.E., 1986. *The Rotary Cement Kiln*, Second Edition, Chemical Publishing Co., Inc., New York, New York.

Exhibit 2-6

Material Temperature Ranges in the Kiln Portion of the Cement Manufacturing

Calcining

Calcining, or calcination, is the process through which carbonates or other compounds are decomposed by application of heat. Carbon dioxide is driven off from limestone ($CaCO_3$) and magnesium carbonate ($MgCO_3$) contained in the feed, leaving free lime (CaO) and magnesia (MgO). This process occurs at a material temperature range between 804°C and 1,200°C.[25]

Complete calcination of the kiln feed before it enters the burning zone is essential to proper burning and clinker formation.[26] The successful calcining process, which produces a grayish-green clinker, requires the appropriate temperature and an oxidizing atmosphere to completely decompose the carbonates in the feed materials. Insufficient oxidizing conditions yield a brown clinker that produces an inferior cement.[27]

Burning

Though often used synonymously with the term sintering, the burning of the calcined kiln feed is actually a three-stage process occurring in the hot end of the kiln (refer to Exhibit 2-6). The area in which burning occurs can be divided into three sections: the upper transition zone, the sintering zone, and the cooling or lower transition zone. This production stage is also commonly referred to as clinkering, because passing through these zones results in the kiln feed becoming clinker. In the upper transition zone, interim-phase formations occur while some calcination is still being completed. The upper transition zone (material temperature range 1,200–1,400°C) is identified in a temperature profile by a rapid rise in material temperature just at the end of the calcining zone. The final stages of clinker compound formation take place in the sintering zone. This process involves exothermic reactions and is the zone of highest material temperature (1,400–1,510°C). The last 3.05 to 6.1 m of the kiln's discharge (hot) end constitute the cooling zone (material temperature range from a high of 1,510°C to a low of 1,290°C).[28]

Cooling

After leaving the kiln, the clinker is further cooled in rotary, planetary, or grate-type coolers by air pulled into the unit by dedicated cooler fans, and then transferred by conveyor to the finish mill.[29] The cooling process conditions can significantly influence the quality of the clinker. Generally, faster cooling rates result in a higher quality clinker.[30]

---

[25] *Ibid.*

[26] *Ibid.*

[27] Kohlhaas, B., *et al.*, 1983. *Cement Engineers' Handbook*, Bauverlag GmbH, Wiesbaden and Berlin.

[28] Muelberg, *et al.*, 1977, *op. cit.* These units have been converted to °C from °F as reported.

[29] *Ibid.*

[30] Peray, 1986, *op. cit.*

Finish Milling/Loading

At the finish milling stage, Portland cement is produced by grinding clinker together with about five percent gypsum to a fine powder (94 to 98 percent particles with diameters less than 0.044 millimeters). It is then loaded into bulk carriers or packaged into bags. The gypsum is added to retard the setting time of the cement, thereby making it more suitable for common construction applications. It is at this stage that various additives along with gypsum are introduced to create specialty Portland cements. For example, masonry cement production includes blending crushed limestone with the clinker and gypsum. Other typical finish milling additives include: blast furnace slag, fly ash, and natural pozzolans (such as volcanic rocks, diatomaceous earth, and burned oil shale residue).[31]

During the finish milling process, the proportioned materials are drawn up by belt conveyors to a two-compartment ball mill. A separator device recycles oversized products and sends correctly sized product to storage. To prevent dehydration of the gypsum, either air or water cooling is used during grinding.[32]

2.2.2 Kiln Design

Rotary cement kilns are horizontal, inclined rotating cylinders that are refractory lined, internally fired, and designed to produce clinker through the intense heating of raw materials. Raw materials are fed into the upper, cool end while fuels are normally fed into the lower, hot end. As a function of the inclined surface, combustion gases and raw materials move counterflow in kilns. Thus, the raw materials get progressively hotter as they travel down the length of the kiln to become clinker at the low, hot end. U.S. cement kilns range in length from 35.4 to 231.6 meters (m) (116 to 760 feet), and 2.4 to 7.3 m in diameter.[33]

Clinker is manufactured in five kiln types:

- Wet process;
- Dry process;
- Preheater;
- Precalciner; and
- Semidry process.

These kiln types represent variations on two primary cement kiln designs: wet process and dry process (preheater, precalciner, and semidry process kilns are variations on the standard dry process). Raw materials are generally the same for both wet and dry processes, but the sequences and operations for raw material crushing, grinding, and blending are different.[34] In both process types, the kiln generally slopes at an angle of about 3 degrees. Most kilns, both wet

---

[31] Kohlhaas, *et al.*, 1983, *op. cit.*

[32] Muelberg, *et al.*, 1977, *op. cit.*

[33] Johnson, W., 1992, *op. cit.*

[34] Beers, A., 1987. *Hazardous Waste Incineration: The Cement Kiln Option*, New York State Legislative Commission on Toxic Substances and Hazardous Wastes, Albany, New York. December 1987.

and dry, are equipped with a 18.3 to 30.5 m "chain" section in the upper, or cool end of the kiln, to increase the heat transfer rate from the discharge gas to the raw feed and to help keep the process material moving down the kiln. Chain sections also provide a filtering action to reduce dust emissions.[35,36] Though the chains are expensive and require a high level of maintenance, the improved energy efficiency of the kiln justifies their use.[37,38]

One major difference between wet and dry kilns is the kiln length.[39] As described above and shown in Exhibit 2-6, the raw material travels through several reaction zones before becoming clinker. The number of these zones required and their relative length varies by kiln type. Wet process kilns require additional length for preheating the slurry feed. To obtain the necessary heat transfer for water evaporation, wet kilns must be long, typically ranging from 137 to over 183 m in length.[40,41] Dry process kilns do not require this slurry preheat zone, and require about 10 percent less length for evaporation.[42] Therefore, standard dry process kilns may be somewhat shorter than otherwise comparable wet kilns. The preheater, precalciner, and semidry process kilns have only calcining and burning zones, because the material has been dried before it enters the kiln. Accordingly, these kiln types may in some cases be very short (under 61 m).[43,44] Therefore, in general, dry kiln types tend to be shorter than wet kilns of the same production capacity (i.e., their length to capacity ratio is smaller). As a result, the use of dry kiln technology has allowed the construction of higher capacity kilns. For example, precalciner kilns in operation in Japan reportedly produce over 9,072 metric tons of clinker per day,[45] while the largest U.S. clinker capacity for a preheater/precalciner kiln is 4,700 metric tons per day.[46] By comparison, available data indicate that the largest wet kilns in the U.S. have a capacity of approximately 3,630 metric tons per day.

---

[35] Muelberg, *et al.*, 1977, *op. cit.*

[36] Engineering-Science, 1987. *Background Information Document for the Development of Regulations to Control the Burning of Hazardous Wastes in Boilers and Industrial Furnaces, Volume II: Industrial Furnaces*, submitted to U.S. Environmental Protection Agency, Waste Treatment Branch, Washington, D.C. January 1987.

[37] Peray, 1986, *op. cit.*

[38] Muelberg, *et al.*, 1977, *op. cit.*

[39] Engineering-Science, 1987, *op. cit.*

[40] Engineering Science, 1987, *op. cit.*

[41] Johnson, 1992, *op. cit.*

[42] Peray, 1986, *op. cit.*

[43] Engineering Science, 1987, *op. cit.*

[44] Johnson, 1992, *op. cit.*

[45] Kirk-Othmer, 1979, *op. cit.*

[46] Portland Cement Association, 1992b, *op. cit.*

Another major difference between wet and dry processes is evident in their heat requirements.[47] At any given location in a kiln, the gas temperature always exceeds the material temperature. However, the closer that these two temperatures approach one another, the more efficient the heat exchange between the gases and the material. Each of the five kiln types has a characteristic temperature profile. In dry kilns, gas and material temperatures tend to be much closer over the entire length of this profile than in wet kilns.[48] Therefore, dry kilns tend to be more efficient than wet kilns, requiring less energy input per ton of clinker produced. Exhibit 2-7 presents reported typical energy requirements for various kiln types.

Exhibit 2-7

Typical Energy Requirements for Each Kiln Type[a]

Kiln Type	Energy Required (Kcal/kg output)
Wet Process Kiln	1,529 – 1,668
Dry Process Kiln	1,251 – 1,390
Semidry (Lepol) Kiln	945.2
Preheater Kiln	750.6 – 889.6
Precalciner Kiln	Unknown[b]

[a] Energy requirements provided in this exhibit are those reported in the literature. Average energy requirements calculated from facility responses to the 1991 PCA survey are comparable. The sample of 46 wet kilns for which complete information was provided averaged 1,520.7 Kcal/kg (5.47 million Btus). The sample of 83 dry kilns, including semidry, preheater, and precalciner kilns, averaged 1,175.9 Kcal/kg.

[b] Specific data were not available for precalciner kilns. However, while precalciners burn 30-50 percent of their total energy input at the rear of the kiln, reducing the heat load on the burning zone, preheater and precalciner kilns consume approximately the same amounts of fuel. Therefore, while precalciners reduce the heat requirements of the kiln itself, it is believed that the total heat required for the complete process (calcination through clinker production) is unchanged and similar to that required for a typical preheater kiln.

Sources: Engineering Science, 1987, *op. cit.*; Perry's Chemical Engineers' Handbook, 1984. Sixth Edition, McGraw-Hill, New York, New York.

The specific characteristics of the five kiln types are discussed below in more detail.

Wet Process Kiln

In the wet process, the limestone and other raw mix components are ground wet and slurried at a moisture content of 30 to 40 percent. This slurry is fed into the upper, or cool, end of the kiln and flows down slope through the kiln to the hot discharge end. A typical process

[47] Engineering Science, 1987, *op. cit.*

[48] Peray, 1986, *op. cit.*

flow diagram for a wet process kiln is presented in Exhibit 2-8. Wet process kilns are longer than dry process kilns because a substantial portion of the kiln length (20 to 25 percent) must be used for evaporation of the slurry water.[49,50]

When compared to dry process kilns, reported advantages of wet process kilns include more uniform feed blending, generally lower emissions of kiln dust, and compatibility with moist climates where complete drying of raw feed is difficult to achieve.[51,52] The primary disadvantage associated with wet process kilns, however, is that they require significantly more energy, because large quantities of water must be evaporated from the raw feed, resulting in higher operational costs. Typical energy requirements for wet process kilns range from 1,529 to 1,668 Kcal/kg of clinker produced.[53,54]

Dry Process Kiln

In the dry process, dry raw mix is pneumatically pumped to the upper end of the kiln. The meal flows down through the sloped kiln as it is thermally treated. Dry process kilns have diameters similar to wet process kilns, but are shorter because there is no evaporation zone required. Dry process kilns operate with a high exit gas temperature of approximately 450°C (840°F), and typically, employ water sprays to cool the gas before it enters the dust control equipment.[55]

Kiln gases exiting dry process kilns do not pass through a wet raw mix that would significantly decrease exit gas temperatures. The high exit gas temperatures can therefore be used for cogeneration of electrical power. This fact may be significant to existing dry process plants because cogeneration could be energy-conserving. In some locations it may even be more economical to add a power plant to an existing dry kiln than to retrofit the kiln with a preheater.[56] The number of facilities currently coupled with power plant operations is not presented in the literature. In the absence of cogeneration equipment, the hot exit gas is used as supplemental combustion air for the kiln fuel.[57]

---

[49] Muelberg, *et al.*, 1977, *op. cit.*

[50] Engineering Science, 1987, *op. cit.*

[51] Peray, 1986, *op. cit.*

[52] Beers, 1987, *op. cit.*

[53] Engineering Science, 1987, *op. cit.*

[54] Perry's Chemical Engineers' Handbook, 1984, *op. cit.*

[55] Peray, 1986, *op. cit.*

[56] *Ibid.*

[57] Muelberg, *et al.*, 1977, *op. cit.*

Exhibit 2-8

Typical Process Flow Diagram for a Wet Process Cement Kiln

Increased energy efficiency is a major advantage of dry process kilns in comparison to wet process kilns. Available data indicate that dry kilns are approximately 10-25 percent more thermally efficient than wet kilns, requiring 1,251 to 1,390 Kcal/kg of clinker produced.[58,59]

Preheater Kiln

Preheater kilns, more accurately referred to as suspension preheater kilns, preheat and partially calcine raw meal by passing it through a system of heat exchange cyclones before it enters the kiln.[60,61] A typical, four-stage suspension flash preheater kiln is illustrated in Exhibit 2-9. As the raw material passes through each of the four stages, it gets hotter and becomes more processed before entering the kiln, resulting in more uniformly processed material. Suspension preheaters reduce by one half to two thirds the required kiln length of the rotary dry process kilns they precede. Because of the increasing fuel costs experienced by kiln operators during the 1970's and early 1980's, suspension preheaters came into common use.[62]

Suspension preheater kilns are the most energy-efficient types of kilns available, producing clinker at energy consumption rates ranging from 750.6 to 889.6 Kcal/kg.[63,64] The addition of a preheater with or without a precalciner improves process efficiency, through fuel savings and scale economies associated with larger production units.[65] The feed in precalciner and preheater kilns also tends to be much more uniformly calcined than in dry kilns and even in longer wet kilns. Operating conditions in the precalciner and preheater kilns are also easier to control.[66]

One disadvantage of the preheater kiln is that plug-up problems can occur at the lower cyclone stage and kiln inlet due to high concentrations of volatile constituents such as alkalies, sulfur, and chlorides in the kiln exit gases. To reduce the severity of this problem, alkali and sulfur bypass systems allow evacuation of some of the kiln exit gases before they reach the preheater cyclones.[67]

---

[58] Engineering-Science, 1987, *op. cit.*

[59] Perry's Chemical Engineer's Handbook, 1984, *op. cit.*

[60] Peray, 1986, *op. cit.*

[61] Muelberg, *et al.*, 1977, *op. cit.*

[62] Peray, 1986, *op. cit.*

[63] Engineering Science, 1987, *op. cit.*

[64] Perry's Chemical Engineers' Handbook, 1984, *op. cit.* The units were converted to Kcal/kg from million Btus/ton as reported.

[65] Engineering-Science, 1987, *op. cit.*

[66] Peray, 1986, *op. cit.*

[67] *Ibid.*

Exhibit 2-9

Typical Process Flow Diagram for a Suspension Flash Preheater Cement Ki

Precalciner Kiln

Precalciner kilns, the most recent advance in cement manufacturing technology, are essentially suspension preheater kilns that are equipped with a secondary firing system (flash furnace) attached to the lower stage of the preheater tower. A pyroclone precalciner kiln is illustrated in Exhibit 2-10. Precalciner kilns fall into two categories -- kilns with and kilns without tertiary air ducts. Kilns with tertiary air ducts are supplied with air from the exhaust gases from the clinker cooler. Precalciner kilns without tertiary air ducts receive air from the kiln itself. The kilns with tertiary air ducts are generally more difficult to control.[68] Both categories process the raw feed similarly.

Precalciner and preheater kilns have several advantages over conventional dry and wet long kilns. As mentioned above, the feed in precalciner and preheater kilns is much more uniformly calcined than in conventional dry and wet long kilns. Operating conditions in the precalciner and preheater kilns are also easier to control. Moreover, precalciner kilns greatly reduce the residence time needed for raw material to become clinker. A conventional dry kiln, for example, requires approximately 45.7 m to achieve 90 percent calcination, a distance that takes the feed about one hour to traverse. The precalciner kiln, in contrast, completes the same amount of thermal work in less than a minute. Precalciners do not improve the energy efficiency of the calcining process, but they do reduce the required heat load in the rotary kiln, thereby extending refractory service life, and reducing operational costs. Additionally, less expensive, lower grade fuels, such as subbituminous coal, lignite, and oil shale, as well as tires and waste oil, can be burned in the auxiliary firing unit, reducing the fuel cost per unit of clinker. Precalciner kilns also exhibit output rates that were previously considered unattainable.[69]

The addition of a preheater or precalciner significantly improves the overall energy efficiency of the cement production process. Depending on whether a preheater and/or precalciner is used, dry process plants can have a long, medium, or short kiln.[70]

Semidry Process Kiln

The semidry process kiln, also known as the "grate process" or the "Lepol" kiln, is a type of preheater kiln that begins with raw feed nodules containing 10 to 15 percent moisture. In the semidry process, raw material nodules travel on a grate through a preheater in which they are partially calcined. The partly calcined material then falls down a chute into the rotary kiln where the final clinkering takes place. The partial precalcination allows the rotary kiln to be only about one-third the usual length. This type of kiln usually requires additional labor to monitor the thickness of the feed bed and to oversee production of the nodules, which is not required in operating conventional rotary kilns. Some plants use filter press cakes rather than nodules for kiln feed. In these cases, the wet-feed slurry is passed through large presses to remove free water, and more importantly, to remove alkalies before the cakes are fed to the kiln.[71]

---

[68] *Ibid.*

[69] *Ibid.*

[70] Engineering Science, 1987, *op. cit.*

[71] Peray, 1986, *op. cit.*

Exhibit 2-10

Typical Process Flow Diagram for a Precalciner Coal and Waste Fired Ceme

Although nearly as energy efficient as preheater and precalciner kilns, the semidry process kiln has a limited output capacity. The semidry process is practical, however, in geographic areas where raw material moisture is so high that it cannot be economically removed by waste heat from the kiln. An additional advantage is that the semidry process kiln operates with much lower dust content in the waste gases than preheater and precalciner kilns.[72] In 1990, however, only four of 115 domestic cement plants reported using a semi-dry process kiln system. The small number of these kilns operating in the U.S. is believed to be related to low output rates and the labor intensive nature of this process.

Trends in Kiln Technology and Use

Exhibit 2-11 shows the age distribution of kilns both in terms of numbers and capacity. Clearly, there has been a trend over the years toward larger capacity kilns of both basic types. While the earliest domestic facilities produced Portland cement by the wet process, the dry process also has been utilized for some time. From the 1950's through the 1970's, wet process kilns remained competitive with the more energy-efficient dry kilns because they were less labor-intensive than dry

Exhibit 2-11

Age and Capacity of Existing Kilns

Date of Kiln Installation	Wet Kilns		Dry Kilns		Overall	
	Number of Kilns	Average Capacity (Ktons)	Number of Kilns	Average Capacity (Ktons)	Number of Kilns	Average Capacity (Ktons)
After 1980	0	0.0	26	690.3	26	690.3
1976-1980	0	0.0	18	653.1	18	653.1
1971-1975	11	459.6	32	476.8	43	470.9
1966-1970	13	424.9	19	425.0	32	426.9
1961-1965	20	355.4	38	336.1	58	346.3
1956-1960	19	260.5	46	199.6	65	226.7
1951-1955	5	193.6	19	176.6	24	181.1
1946-1950	6	158.0	9	164.0	15	160.0
1941-1945	1	150.0	0	0.0	1	150.0
1936-1940	1	153.0	2	138.0	3	143.0
1931-1935	0	0.0	0	0.0	0	0.0
Before 1931	4	159.3	0	0.0	4	159.3

Source: Adapted from Portland Cement Association, 1992b, *op. cit.*

[72] *Ibid.*

kilns.[73] However, no new wet kilns have been constructed since 1975. This change to more energy-efficient dry technologies may be attributed to rising energy prices. Because dry kilns can be constructed with larger capacities than wet kilns, the trend toward larger capacities also may have made this technology more attractive because of positive economies of scale.

Kilns normally operate 24 hours/day and 7 days/week, but temporary shutdowns for refractory relining and other maintenance activities reduce the effective annual operating period substantially. The most recent figures report the average annual operating time at 313 days/year as of 1990. Although the kilns operate nearly year round, they do not necessarily operate at maximum capacity at all times. The portion of capacity utilized depends upon market factors. As indicated in the preceding discussion of industry structure, annual clinker capacity utilization is approximately 86 percent.[74]

2.2.3 Process Inputs

Many of the issues surrounding CKD focus on the health and environmental impacts associated with exposure to CKD or its constituents,[75] and on the development of technologies to improve recovery rates, minimize generation, improve operational efficiencies in existing kiln systems, and seek alternative beneficial applications for existing, stockpiled CKD. An understanding of these issues requires knowledge of both the raw materials and the fuels used in cement kiln systems, because it is these inputs, coupled with the manufacturing process, that to a large extent, determine the characteristics and quantities of CKD generated.

The following discussion provides insight into how the inputs into the process of manufacturing Portland cement can affect process operations and the ultimate composition and fate of CKD. The focus is on the major (bulk) constituents of raw mix and fuel inputs. A detailed discussion of trace constituents and their sources, fate, and impacts is presented in Chapters 3, 5, and 7.

The data used in this section of the report were taken from facility responses to the 1991 PCA survey; however, not all domestic facilities responded to this survey. For example, the totals for raw material and fuel consumption reported here do not reflect total consumption for the industry. Rather, they reflect consumption for the sample of facilities that responded to the pertinent questions in the survey. EPA has no reason to believe that these facilities are not representative of the population at large, and has conducted the analyses presented in this report accordingly. In addition, the sample of facilities providing information for 1990 in the survey was not necessarily the same as the sample providing information for 1985. Therefore, the reader should not compare or make any inferences regarding total consumption for these two years.

Raw (Feed) Materials

Portland cement is commonly made from a mixture of calcareous (calcium containing) materials, typically limestone, and smaller amounts of materials that contain silica, alumina, and

---

[73] Kirk-Othmer, 1979, *op. cit.*

[74] Johnson, W., 1992, *op. cit.*

[75] Exposure to CKD can be direct or through the contamination of environmental media such as ground water.

iron. Kiln feed is generally comprised of about 80 percent carbonate of lime and about 20 percent silica with much lower quantities of alumina and iron. The number of raw materials required to achieve this blend depends on the composition of the materials and their availability.[76] Exhibits 2-12, 2-13, and 2-14 show the types of raw materials consumed and the types of feed mixtures used in 1990 and 1985 at facilities that responded to the 1991 PCA survey.[77] There has been very little change in the types of materials used for cement manufacture over the last five years. Limestone is the primary source of calcium for nearly all cement plants, though one facility reported using cement rock (a type of limestone that is nearly perfectly balanced for cement manufacture) in 1990, and one facility reported using marl (an earthy material containing significant amounts of calcium carbonate). In the past, plants in Alabama and Arkansas have used chalk, and plants along the Gulf of Mexico and the coast of California have used crushed coquinoid limestone (often referred to as shell hash) as sources of calcium.[78] However, no facilities reported using these materials in the 1991 PCA survey.

Shale, clay, and sand are the primary materials fed as sources of silica and alumina. Some facilities also utilize ash (typically fly ash or bottom ash) as a primary or secondary feed for its silica and alumina content. A majority of facilities use either iron ore or steel mill scale to supplement the iron content of their mix. Other materials used in significant amounts in cement kilns include the following: gypsum, for its calcium content; bauxite, an aluminum ore; diatomaceous earth, which is high in silica; and slag, for its silica and calcium content. Exhibit 2-15 presents chemical composition data for several types of limestone and many of these other feed materials.

In addition to the chemical composition of the desired product, the proportion of each type of raw material used in a given cement kiln will depend on the composition of the specific materials available to the operator. Exhibit 2-16 shows the quantity ranges and typical mixtures of materials fed to kilns in 1990. The specific blend of materials used at a given kiln at a given time is often calculated through an iterative process using computer programs. The proportioning process takes into account the ratios of calcium, silica, alumina, and iron needed to produce good quality clinker, as well as the "burnability" of the raw mix (i.e., the requirements in terms of time, temperature, and fuel to process the material).[79] In addition, kiln operators pay close attention to the presence of "impurities" in the mixture, including magnesia, sulfur, chlorides, and oxides of potassium and sodium (referred to as "alkalies"). Magnesia (MgO) levels are carefully monitored because they can lead to the production of clinker that is unsound if not cooled rapidly (i.e., such clinker used to make concrete can cause destructive expansion of hardened concrete through slow reaction with water).[80] Magnesia can, however, be desirable to some extent because it acts as a flux at sintering temperatures, facilitating the burning process. Alkalies can react in the cool end of the kiln with sulfur dioxide, chlorides, and carbon dioxide

---

[76] Peray, 1986, *op. cit.*

[77] For more detailed information on the derivation of the raw material consumption statistics used in this report, refer to the Technical Background Document.

[78] Boynton, R.S., 1980. *Chemistry and Technology of Lime and Limestone*, Second Edition, John Wiley and Sons, New York, New York.

[79] Kirk-Othmer, 1979, *op. cit.*

[80] Taylor, H.F.W., 1990. *Cement Chemistry*, Academic Press Inc., San Diego, California.

contained in the kiln gas and can lead to operational problems. Therefore, high levels of alkalies, sulfur, and chlorides in the feed mix are undesirable.[81]

[81] Peray, 1986, *op. cit.*

Exhibit 2-12

Feed Mixtures in 1990

Primary Feed(s)[a]	Number of Plants[b]	Secondary Feeds[c] (Number of Plants Utilizing)							Other Secondary Feeds
		Sand	Shale	Clay	Iron Ore	Ash[d]	Mill Scale	Gypsum	
Limestone	19	12	5	7	15	3	3	3	Electroplating Sludge, Filter Cake, Slag, Bauxite
Limestone and Clay	16	7	1	--	7	3	3	2	Foundry Wastes, Spent Catalysts, Carbon Black
Limestone and Shale	14	9	--	0	2	2	0	2	
Limestone and Sand	10	--	2	1	6	1	2	2	Bauxite, Iron Flue Dust, Mag Rock
Limestone and Ash[e]	6	2	0	2	3	--	1	1	Staurolite
Limestone, Sand, and Shale	5	--	--	1	4	0	1	0	
Limestone, Sand, and Clay	4	--	0	--	2	1	1	0	Slag, Aluminum Silicate
Other[f]	5	2	2	1	5	0	0	0	
Total	**79**	**32**	**10**	**12**	**44**	**10**	**11**	**10**	

[a] For purposes of this analysis, primary feeds are defined as those materials that make up five percent or more of the total feed.

[b] This exhibit presents information only for the 79 facilities for which 1990 raw feed information was available.

[c] For purposes of this analysis, secondary feeds are those materials that make up less than five percent of the total feed.

[d] Includes bottom ash, fly ash, and alumina ash (calcined alumina).

[e] Includes facilities for which the primary feeds were limestone and ash; limestone, ash, and sand; limestone, ash, and clay; and limestone, ash, and slag.

[f] Other primary feed mixtures in 1990 included: limestone, shale, and clay; limestone and gypsum; limestone, shale, and diatomaceous earth; cement rock and limestone; and marl and limestone.

Source: Facility responses to the 1991 PCA Survey.

Exhibit 2-13

Feed Mixtures in 1985

Primary Feed(s)[a]	Number of Plants[b]	Secondary Feeds[c] (Number of Plants Utilizing)							Other Secondary Feeds
		Sand	Shale	Clay	Iron Ore	Ash[d]	Mill Scale	Gypsum	
Limestone	26	18	7	7	19	2	4	4	Slag, Bauxite, Dolomite
Limestone and Clay	15	3	0	--	6	3	3	2	Slag, Fluorspar, Calcium Chloride, Carbon Black
Limestone and Shale	10	5	--	0	6	0	0	1	
Limestone and Sand	5	--	1	2	2	1	0	0	Iron Flue Dust
Limestone and Ash[e]	5	4	0	1	2	--	2	0	Staurolite
Limestone, Sand, and Shale	5	--	--	0	3	1	1	0	
Limestone, Sand, and Clay	5	--	0	--	4	2	1	0	
Other[f]	5	3	3	2	4	0	0	0	
Total	**76**	**33**	**11**	**12**	**46**	**9**	**11**	**7**	

[a] For purposes of this analysis, primary feeds are defined as those materials that make up five percent or more of the total feed.

[b] This exhibit presents information only for the 76 facilities for which 1985 raw feed information was available.

[c] For purposes of this analysis, secondary feeds are those materials that make up less than five percent of the total feed.

[d] Includes bottom ash, fly ash, and alumina ash.

[e] Includes facilities for which the primary feeds were limestone and ash; limestone, ash, and clay; and limestone, ash, and slag.

[f] Other primary feed mixtures in 1985 included: limestone, shale, and clay; limestone, shale, and diatomaceous earth; marl and limestone; limestone, sand, shale, and clay; and limestone, sand, and mag rock (limestone with high magnesium content).

Source: Facility responses to the 1991 PCA Survey.

Exhibit 2-14

Raw Material Consumption in 1990 and 1985[d]

Feed Material	1990 Consumption[a]		1985 Consumption[b]	
	Metric Tons	Percent of Total	Metric Tons	Percent of Total
Limestone	67,852,083	84.28	60,359,409	85.55
Shale	3,685,150	4.58	3,215,690	4.56
Clay	2,989,094	3.71	3,098,777	4.39
Sand	2,076,220	2.58	1,475,413	2.09
Marl	1,526,864	1.90	644,430	0.91
Ash[c]	1,158,200	1.44	743,550	1.05
Iron Ore	512,659	0.64	451,471	0.64
Gypsum	321,122	0.40	149,674	0.21
Bauxite	89,280	0.11	36,320	0.05
Mill Scale	76,623	0.10	87,442	0.12
Diatomaceous Earth	74,386	0.09	81,013	0.11
Slag	57,580	0.07	134,286	0.19
Mag Rock	9,980	0.01	56,065	0.08
Other	80,875	0.10	20,241	0.03
Total	**80,510,116**	**100.00**	**70,553,781**	**100.00**

[a] Reflects 1990 raw material consumption for the 79 facilities for which data were available.

[b] Reflects 1985 raw material consumption for the 76 facilities for which data were available.

[c] Includes bottom ash, fly ash, and alumina ash.

[d] These numbers have been converted from short tons per year as reported in the source.

Source: Facility responses to the 1991 PCA survey.

Exhibit 2-15

Typical Composition of Raw Materials

Feed Material	Constituent (weight percent)					Ignition Loss (weight percent)
	CaO	SiO_2	Al_2O_3	Fe_2O_3	MgO	
CALCIUM SOURCES						
Indiana high calcium limestone	54.5	0.7	0.7	0.1	0.6	40 - 43
Virginia high calcium limestone	55.3	0.4	0.1	0.1	0.5	40 - 43
Kansas cretaceous high calcium limestone (chalk)	52.5	2.4	1.6	0.6	0.6	40 - 43
Illinois Niagaran dolomitic limestone	31.2	0.1	0.3	0.2	20.5	44
Northwestern Ohio Niagaran dolomitic limestone	29.5	0.1	0.0	0.1	21.1	44
New York magnesian limestone	45.7	2.6	0.2	0.2	7.1	44
Lehigh Valley, Pennsylvania limestone (cement rock)	38.9	19.8	5.4	1.6	2.7	32 - 37
Pennsylvania limestone (cement rock)	41.8	13.4	4.6	0.6	1.9	32 - 37
Marl	49.1	6.0	0.6	2.3	0.4	40.4
SILICA AND ALUMINA SOURCES						
Shale	3.2	53.8	18.9	7.7	2.2	8.2 - 13.1
Clay	0.5-0.9	61.0-67.8	14.3-16.9	4.5-12.4	0.4-1.2	8
Sand	0.8	70.0	15.0	5.0	0.2	8.6
Blast Furnace Slag	35.5	33.1	9.1	0.9	16.4	2.1
Bauxite	--	10.6	57.5	2.6	--	28.4
IRON SOURCES						
Iron Ore	--	6.7	1.4	89.7	0.4	0.2
Steel Mill Scale	--	2.5	1.1	89.9	--	4.0

Sources: Boynton, 1980, *op. cit.*; Peray, 1986, *op. cit.*; Kirk-Othmer, 1979, *op. cit.*

Exhibit 2-16

Typical Feed Mixtures in 1990

Primary Feed(s)		Feed Composition (weight percent)								
		Limestone	Sand	Shale	Clay	Iron Ore	Ash[a]	Mill Scale	Gypsum	Other
Limestone	Range	89.67 - 99.14	0.00 - 3.76	0.00 - 4.40	0.00 - 4.41	0.00 - 2.77	0.00 - 4.80	0.00 - 0.72	0.00 - 3.58	0.00 - 3.27
	Average	95.05	1.29	0.63	0.76	1.11	0.29	0.08	0.36	0.44
Limestone and Clay	Range	74.54 - 91.10	0.00 - 4.91	0.00 - 3.16	6.95 - 22.67	0.00 - 0.78	0.00 - 4.29	0.00 - 1.66	0.00 - 2.28	0.00 - 1.95
	Average	83.08	1.08	0.19	14.54	0.16	0.43	0.18	0.15	0.19
Limestone and Shale	Range	69.27 - 91.98	0.00 - 4.60	5.01 - 30.73	0.00 - 0.00	0.00 - 1.44	0.00 - 2.85	0.00 - 0.00	0.00 - 3.00	0.00 - 0.39
	Average	82.48	1.37	15.18	0.00	0.38	0.22	0.00	0.35	0.03
Limestone and Sand	Range	80.52 - 93.89	5.10 - 17.68	0.00 - 4.29	0.00 - 2.63	0.00 - 2.24	0.00 - 1.61	0.00 - 0.72	0.00 - 2.56	0.00 - 0.00
	Average	88.85	8.09	0.76	0.26	0.64	0.16	0.14	0.27	0.00
Limestone and Ash[b]	Range	77.58 - 91.4	0.00 - 10.32	0.00 - 0.00	0.00 - 13.04	0.00 - 1.24	8.21 - 13.27	0.00 - 0.25	0.00 - 0.00	0.00 - 0.00
	Average	83.69	2.87	0.00	2.88	0.50	10.01	0.05	0.00	0.00
Limestone, Sand, and Shale	Range	78.47 - 83.58	5.68 - 9.36	7.86 - 11.61	0.00 - 1.53	0.00 - 2.36	0.00 - 0.00	0.00 - 0.07	0.00 - 0.00	0.00 - 0.00
	Average	81.18	7.40	9.94	0.31	1.16	0.00	0.01	0.00	0.00
Limestone, Sand, and Clay	Range	75.76 - 82.93	5.77 - 9.71	0.00 - 0.00	5.37 - 14.86	0.00 - 1.99	0.00 - 1.20	0.00 - 2.25	0.00 - 0.00	0.00 - 3.62
	Average	80.27	8.28	0.00	8.80	0.89	0.30	0.56	0.00	0.91
Range of Above		**69.27 - 99.14**	**0.00 - 17.68**	**0.00- 30.73**	**0.00- 22.67**	**0.00- 2.77**	**0.00- 13.27**	**0.00- 2.25**	**0.00- 3.58**	**0.00- 3.62**
All Facilities[c]	**Range**	**19.85 - 99.14**	**0.00- 17.68**	**0.00- 30.73**	**0.00- 22.67**	**0.00- 2.77**	**0.00- 13.27**	**0.00- 2.25**	**0.00- 10.42**	**0.00- 3.62**
	Average	**84.98**	**2.90**	**3.89**	**3.93**	**0.63**	**0.96**	**0.11**	**0.35**	**0.19**

[a] Includes bottom ash, fly ash, and alumina ash.

[b] Includes facilities whose primary feeds were limestone and ash; limestone, ash, and sand; limestone, ash, and clay; and limestone, ash, and slag.

[c] Reflects feed mixtures for the 79 facilities for which data were available and includes facilities that do not fall into one of the primary feed categories listed above (i.e., facilities from the "other" category shown in Exhibit 2-14).

Source: Facility responses to the 1991 PCA survey.

Available data indicate that the cement industry consumes almost 1.6 metric tons of raw material per ton of clinker produced. The portion of raw material that does not become clinker is either lost on ignition or becomes CKD. Exhibit 2-15 shows typical ignition losses for each material type. Many of the feed materials, including limestone, can contain significant quantities of trace metals. Consequently, trace metal levels from feed materials in CKD can vary from plant to plant based on differences in feed mixture components. As stated above, the occurrence and impacts of trace metals are discussed further in Chapters 3, 5, and 7 of this report.

Fuels

The process of producing cement requires tremendous amounts of energy. The cost of this energy can constitute as much as 40 percent of total production costs for a cement facility.[82] The most energy-intensive part of the process is the maintenance of adequate temperatures inside the cement kiln.[83] As indicated in the discussion of the manufacturing process, material temperatures inside the kiln reach as high as 1,510°C (2,750°F). The heat source (combustion gas) must therefore be hotter than these materials, or hotter than the temperatures needed to form cement. In 1990, the average energy required for a kiln to produce one kg of clinker was 1,245 Kcals.[84]

The U.S. Bureau of Mines estimates that in 1990, the domestic cement industry consumed 71 trillion Kcals.[85] Industry responses to the 1991 PCA survey, however, suggest that this figure may be an underestimate. For example, 71 facilities that provided complete fuel information in the survey consumed an estimated 52 trillion Kcals. Also, the energy required to manufacture the nearly 70 million metric tons of clinker produced in 1990 at the average of 1,245 Kcals/kg (as estimated from the PCA surveys) would be over 81 trillion Kcals.

Clearly, the elevated combustion temperatures involved in cement production require fuels with a high heat content. Furthermore, the large volume of fuel consumed by the industry necessitates fuels that are available in large quantities at reasonable cost. Historically, these circumstances have dictated an almost exclusive reliance on fossil fuels of one type or another. Exhibits 2-17, 2-18, and 2-19 characterize fuel consumption by the cement industry in 1985 and 1990. These exhibits show that coal and, to a lesser extent, other fossil fuels have been and continue to be the primary fuels burned in most cement kilns. However, there has been a trend toward exploiting other, lower cost fuel alternatives, particularly waste fuels. In particular, a number of cement kilns across the country now fire non-hazardous solid wastes and/or hazardous waste liquids and solids as fuel. The following sections discuss the use of fossil fuels, solid waste fuels, and hazardous waste fuels in more detail.

---

[82] Johnson, W., 1992, *op. cit.*

[83] Smith, J.D., 1990. Cement Kilns 1990, *EI Digest*, Environmental Information, Ltd. June 1990.

[84] Fuel consumption statistics for this report were derived from facility responses to the 1991 PCA survey. For more detailed information on the derivation of these statistics, refer to the Technical Background Document. These units were converted to Kcals from Btus as reported.

[85] Johnson, W., 1992, *op. cit.*

Exhibit 2-17

Cement Kiln Fuel Consumption in 1990 and 1985

Fuel Input	1990 Consumption[a]			1985 Consumption[b]		
	Total Consumption[c]	Energy Equivalent (million Kcals)	Percent of Total	Total Consumption	Energy Equivalent (million Kcals)	Percent of Total
Coal	5,548,250 metric tons	36,969,297	71.4%	5,838,240 metric tons	38,901,568	86.9%
Coke	866,732 metric tons	6,820,688	13.2%	518,274 metric tons	4,088,875	9.1%
Hazardous waste	NA	3,535,117	6.8%	NA	563,693	1.3%
Natural Gas	384 km^3	3,455,517	6.7%	121 km^3	1,087,839	2.4%
Oil	43,551 kiloliters	424,025	0.8%	12,452 kiloliters	124,253	0.3%
Solid waste	NA	491,003	0.9%	NA	2,666	0.0%
Other	NA	54,959	0.1%	NA	35,626	0.1%
Total	—	**51,750,606**	**100.0%**	—	**44,804,520**	**100.0%**

[a] Reflects 1990 fuel consumption for the 71 facilities for which data were available.

[b] Reflects 1985 fuel consumption for the 65 facilities for which data were available.

[c] The units in this table have been converted to metric from standard as reported.

NA: Data not available.

Source: Facility responses to the 1991 PCA survey.

Exhibit 2-18

Cement Kiln Fuel Mixtures in 1990

Primary Fuel(s)[a]	Number of Plants[b]	Supplemental Fuel[c] (Number of Plants Utilizing)						
		Coal	Natural Gas	Oil	Coke[d]	Solid Waste	Hazardous Waste	Other[e]
Coal	39	--	19	17	4	8	2	3
Coal, Coke	11	--	5	1	--	3	1	0
Coal, Coke, Hazardous Waste	6	--	3	2	--	2	--	2
Coal, Hazardous Waste	6	--	2	3	1	1	--	0
Coal, Natural Gas	5	--	--	1	2	1	1	0
Natural Gas, Coke	3	2	--	0	--	0	0	0
Natural Gas	2	0	--	1	0	1	0	0
Coal, Natural Gas, Coke	2	--	--	0	--	1	0	0
Coke, Hazardous Waste	2	0	2	0	0	0	--	0
Coal, Solid Waste	1	--	1	0	0	--	0	0
Coal, Oil	1	--	0	--	0	0	0	0
Solid Waste	1	0	1	0	0	--	0	0
Natural Gas, Oil, Coke	1	0	--	--	--	0	0	0
Natural Gas, Solid Waste	1	0	--	0	0	--	0	0
Total	**81**	**2**	**33**	**25**	**7**	**17**	**4**	**5**

[a] For purposes of this analysis, primary fuels are defined as those inputs that make up ten percent or more of the total heat value input.

[b] This exhibit presents information only for the 81 facilities for which 1990 fuel input information was available.

[c] For purposes of this analysis, supplemental fuels are those inputs that make up less than ten percent of the total heat value fed.

[d] Includes petroleum coke.

[e] Other fuels utilized in 1990 included: coke dust, carbon black, re-refined oil, carbon dust, and propane.

Source: Facility responses to the 1991 PCA survey.

Exhibit 2-19

Cement Kiln Fuel Mixtures in 1985

Primary Fuel(s)[a]	Number of Plants[b]	Supplemental Fuel[c] (Number of Plants Utilizing)						
		Coal	Natural Gas	Oil	Coke[d]	Solid Waste	Hazardous Waste	Other[e]
Coal	49	--	21	17	6	1	3	4
Coal, Coke	13	--	7	3	--	2	1	0
Coal, Natural Gas	4	--	--	2	1	0	0	0
Coal, Natural Gas, Coke	3	--	--	0	--	0	0	0
Natural Gas, Coke	1	0	--	1	--	0	0	0
Natural Gas	1	0	--	0	0	0	0	0
Coal, Hazardous Waste	1	--	0	0	0	0	--	0
Coal, Coke, Hazardous Waste	1	--	1	0	--	0	--	0
Natural Gas, Oil, Coke	1	0	--	--	--	0	0	0
Natural Gas, Coke, Hazardous Waste	1	1	--	0	--	0	--	0
Total	**75**	**1**	**29**	**23**	**7**	**3**	**4**	**4**

[a] For purposes of this analysis, primary fuels are defined as those inputs that make up ten percent or more of the total heat value input.

[b] This exhibit presents information only for the 75 facilities for which 1985 fuel input information was available.

[c] For purposes of this analysis, supplemental fuels are those inputs that make up less than ten percent of the total heat value fed.

[d] Includes petroleum coke.

[e] Other fuels utilized in 1985 included: coke dust, sublime pitch, re-refined oil, carbon dust, and propane.

Source: Facility responses to the 1991 PCA survey.

Fossil Fuels

Although the industry is now utilizing increasing amounts of alternative fuels, most cement kilns continue to combust traditional fossil fuels to produce the enormous process heat required for cement production. Fossil fuels still accounted for more than 90 percent of the total energy consumed in cement kilns in 1990. In contrast to the trend in the 1970's and early 1980's, when rising oil prices resulted in coal displacing oil as kiln fuel, there has been a recent trend away from coal toward other types of fossil fuels (coke, natural gas, and oil) and toward waste fuels. Exhibits 2-17, 2-18, and 2-19 show that coal's share of cement kiln fuel consumption declined from 1985 to 1990, both in terms of total energy provided and in the percentage of facilities using it. Coal, however, still remained the most commonly used fuel.

Most cement plants firing coal as a primary fuel obtain the coal from a local source. Data from the 1991 Keystone Coal Industry Manual suggest that most kilns usually obtain coal from within the same state or from the closest state with a sufficient coal supply. Coal is primarily organic matter consisting of carbon, hydrogen, oxygen, nitrogen, and sulfur. The composition of coal varies from place to place throughout the U.S. Coal is ranked according to composition into classes ranging from anthracitic to bituminous to subbituminous to lignitic. Exhibit 2-20 shows average coal composition by rank, and Exhibit 2-21 displays the geographic distribution of each rank.

Coal can contain significant quantities of sulfur, trace metals, and halogens, and their concentrations are dependent on the area in which the coal was mined. Consequently, contaminant levels attributable to coal in CKD can vary from plant to plant based on regional differences in coal composition. The occurrence of trace metals is discussed further in Chapter 3 of this report. Sulfur (in the form of SO_3) will vaporize in the kiln to form sulfur dioxide (SO_2), and condense in the form of sulfates. Within the kiln, these sulfates combine with calcium and potassium, causing operational problems in the cool end of the kiln.[86] Halogens are of concern because chlorides can cause operational problems similar to those caused by sulfur. Chlorine concentrations in coal can range from 100 to 2,800 parts per million.[87]

The other fossil fuels utilized in cement kilns include coke, natural gas, and oil. Coke is the solid, cellular, infusible material remaining after the carbonization of coal, pitch petroleum residues, and certain other carbonaceous materials.[88] The coke used by cement kilns is typically petroleum coke. Natural gas is a naturally occurring mixture of hydrocarbon and nonhydrocarbon gases found in the porous geologic formations beneath the earth's surface. Processed natural gas is principally methane, with small amounts of ethane, propane, butane, pentane, carbon dioxide, and nitrogen.[89] Because of its high heat transfer rate, natural gas is used to perform initial firing of kilns at many cement plants. When the kiln reaches operating temperature, the primary fuel is then brought on-line. Coke, natural gas, and oil are considered "cleaner" than coal because they contain less sulfur per Kcal provided.

---

[86] Peray, 1986, *op. cit.*

[87] Environmental Toxicology International, 1992, *op. cit.*

[88] Perry's Chemical Engineers' Handbook, 1984, *op. cit.*

[89] Kirk-Othmer, 1979, *op. cit.*

Exhibit 2-20
Average Coal Composition by Rank

	Average	Anthracite	Bituminous	Subbituminous	Lignite
Kcal (per kg.)	6,210	7,100	6,820	5,230	2,780
Moisture	10.0	1.4	4.8	18.4	41.5
Volatile matter	29.9	6.5	32.3	33.8	23.0
Fixed carbon	48.8	79.5	51.2	39.0	20.9
Ash	11.3	12.6	11.7	8.8	14.6
Hydrogen	5.1	2.4	5.0	5.9	6.8
Carbon	64.1	80.1	69.1	54.3	29.9
Nitrogen	1.1	0.8	1.3	1.0	0.5
Oxygen	16.4	3.2	10.3	29.3	46.5
Sulfur	2.0	0.8	2.7	0.7	1.7
Sulfate sulfur	0.12	0.02	0.16	0.04	0.24
Pyritic sulfur	1.19	0.35	1.70	0.35	0.68
Organic sulfur	0.70	0.48	0.88	0.32	0.75

(All values except Kcals in weight percent)

* These units have been converted to Kcal/kg from Btus/lb as reported.

Sources: Swanson, V.E., et al., 1976. *Collection, Chemical Analysis, and Evaluation of Coal Samples in 1975*, U.S. Geological Survey, Open File Report 76-468.

Exhibit 2-21
Coal Producing Regions of the United States and Coal Types Produced

Region	Coal Ranks Produced
Eastern Province (Alabama, Kentucky, Maryland, Ohio, Pennsylvania, Tennessee, Virginia, West Virginia)	Primarily anthracite, with large deposits of bituminous
Interior Province (Arkansas, Illinois, Indiana, Iowa, Kansas, Kentucky, Michigan, Missouri, Nebraska, Oklahoma)	Medium- to high-volatile bituminous, with smaller volumes of low-volatile bituminous and anthracite
Gulf Province (Alabama, Arkansas, Mississippi, Texas)	Lignite
Northern Great Plains Province (Montana, North Dakota, Wyoming)	Lignite, subbituminous
Rocky Mountain Province (Arizona, Colorado, New Mexico, Utah, Wyoming)	Bituminous, subbituminous
Pacific Coast Province (Washington)	Bituminous, subbituminous, lignite

Source: Magee, E.M., et al., 1973. *Potential Pollutants in Fossil Fuels*, prepared for U.S. Environmental Protection Agency, Esso Research and Engineering Co., Linden, New Jersey. June 1973.

Exhibit 2-22 compares relative costs per unit of energy of each of the fossil fuels. Coal (or at least bituminous, subbituminous, and lignite coal) is inexpensive compared to the other fuel types, which certainly contributes to its dominance as the primary energy source for cement kilns. However, natural gas prices have fallen much more rapidly than coal prices over the last five years. These reduced prices, combined with the lower sulfur content of natural gas, may help explain its increasing share of the kiln fuel market. Moreover, domestic supplies of both coal and natural gas are abundant, providing a more secure long-term fuel source, as compared to oil.

Exhibit 2-22

Nominal Fossil Fuel Prices in 1985 and 1990

Fuel	1990 Price (cents per million Kcals)	1985 Price (cents per million Kcals)	Percent Change
Coal (Anthracite)	692.7	810.6	- 14.5
Coal (Bituminous, Subbituminous, and Lignite)	395.0	455.7	- 13.3
Natural Gas	613.7	896.0	- 31.5
Oil	1,370.8	1,648.7	- 16.9
Coke	Not Available	Not Available	--

Source: Energy Information Administration, 1992. *Annual Energy Review 1991*. June 1992.

Non-hazardous Waste Fuels

In an effort aimed largely at reducing production costs, the cement industry has been actively investigating alternative fuel sources. As a result, there has been a significant increase in the use of wastes, both hazardous and non-hazardous, as fuels by cement kilns. Three facilities reported using small amounts of non-hazardous solid waste[90] as supplemental fuels in 1985. By comparison, 20 facilities reported using solid waste as either primary or supplemental fuel in 1990. One of these facilities even obtained the majority (over 70 percent) of the energy it consumed from solid waste (waste oil). The primary types of non-hazardous solid waste used as fuel in 1990 were used tires and waste oil. One facility reported using waste wood chips as fuel. Exhibit 2-23 further details the consumption of solid waste fuel by type. Reportedly, the industry is also evaluating other types of non-hazardous solid waste, including almond shells and municipal solid waste, for use as kiln fuel.[91] Although available waste fuel price data are extremely limited, it is EPA's understanding that the burning of such alternative fuels can be done at zero net cost or even at a small profit to cement plant operators.

[90] The term, "solid waste", is used throughout this analysis in its regulatory sense. The term does not have a direct relationship to the physical form of the material and includes sludges and liquid wastes (such as waste oil) as well as solids.

[91] Portland Cement Association, 1992a, *op. cit.*

Exhibit 2-23

Breakdown of Solid Waste Fuel Consumption[c]

Solid Waste	1990 Consumption[a]			1985 Consumption[b]		
	Total Consumption	Energy Equivalent (million Kcals)	Percent of Total	Total Consumption	Energy Equivalent (million Kcals)	Percent of Total
Tires	69,228 metric tons	278,391	56.7%	0	0	0.0%
Waste Oil	19,148 kiloliters	207,841	42.3%	314 kiloliters	2,666	100.0%
Wood Chips	943 metric tons	4,792	1.0%	0	0	0.0%
Total	--	**491,024**	**100.0%**	--	**2,666**	**100.0%**

[a] Reflects 1990 fuel consumption for the 71 facilities for which data were available.

[b] Reflects 1985 fuel consumption for the 65 facilities for which data were available.

[c] These units have been converted to metric units from the standard units reported.

Source: Facility responses to the 1991 PCA survey.

Hazardous Waste Fuels

In addition to increasing consumption of solid waste fuels, cement kiln operators have substantially increased the consumption of hazardous wastes as fuel, which has come to account for a significant portion of fuel consumption by cement kilns. Available data indicate that hazardous waste fuels now supply as much of the total energy consumed as natural gas (see Exhibit 2-17). The remainder of this section discusses the hazardous waste fuels industry in general, the extent of hazardous waste consumption by kilns, the types of hazardous waste burned, the technologies used to feed the waste to kilns, and environmental regulations applicable to this practice. The section concludes by highlighting some of the subjective arguments made by supporters and opponents of burning hazardous wastes in cement kilns.

Overview of the Hazardous Waste Fuels Industry

As part of EPA's RCRA Subtitle C Land Disposal Restrictions (LDR) Program (see 40 CFR Part 268), EPA has established treatment standards that must be met before a hazardous waste may be land-disposed. These standards are based on the performance of the Best Demonstrated Available Technology (BDAT). For most non-aqueous wastes contaminated with organic constituents (e.g., solvents, petroleum refining wastes), EPA has determined that incineration is the BDAT. Use as fuel in boilers or industrial furnaces (BIFs) (e.g., cement kilns) is an acceptable means of complying with LDRs for many of these wastes. Because of the significant demand for treatment of hazardous wastes, the limited availability of and high price of using commercial hazardous waste incinerators, and the sizable fuel requirements of cement

kilns, cement kilns can successfully compete with commercial incinerators in the waste treatment market, and have become a major component of the commercial hazardous waste management industry.

Because the business of managing hazardous wastes is quite different from the business of manufacturing cement, and because cement plants are often located far from waste generators, many cement companies rely on intermediate fuel processors to supply them with waste fuels. These fuel processors may be located at the cement plant site, but more often they are not. The fuel processor typically accepts or collects wastes from many individual waste generators and stores and blends wastes to meet cement kiln specifications. In some cases, these fuel processors also manage or participate in hazardous waste fuel management activities (e.g., sampling and recordkeeping) at the cement facility. Waste fuels may be stored in tanks or in container storage areas prior to being fed to the kiln or, in some cases, may be fed directly from tanker trucks.

Extent of Hazardous Waste Consumption by Cement Kilns and Types of Waste Burned

Environmental Information Digest lists 23 cement plants that were routinely burning hazardous waste in 1990.[92] Eighteen of the 81 facilities that provided fuels information in response to the 1991 PCA survey reported burning hazardous waste as either primary or supplemental fuel. As noted above and shown in Exhibits 2-17, 2-18, and 2-19, the practice of burning hazardous waste in cement kilns has increased significantly during the last five years, both in terms of the number of facilities utilizing hazardous waste and in terms of percent of total energy consumed.

Exhibit 2-24 provides information on the physical form of hazardous wastes burned in cement kilns. Although liquid wastes comprise most of the hazardous wastes consumed, cement plant operators also have expanded their consumption of hazardous wastes in solid form in recent years. In

Exhibit 2-24

Breakdown of Hazardous Waste Fuel Consumption

Hazardous Waste Physical Form	1990 Consumption[a]		1985 Consumption[b]	
	Energy Equivalent (million Kcals)	Percent of Total	Energy Equivalent (million Kcals)	Percent of Total
User name: R6HASSO (43)	Queue: R6HAZRD100	3.5%	0	
File name: Server PS_R6HAZRD100				
Directory:				
Description: LPT1 Catch				
January 13, 94 8:57am				

```
**********************************************************************
                                  *
RRRR  CCC  A   SSS  SSS  OOO            *
R  RC  C AA S  SS  SO  O          *
R  RC   A AS   S   O  O           *
RRRR C   A  A SSS  SSS O  O           *
RR  C   AAAAA   S   SO  O          *
R  R C  CA  AS  SS  SO  O         *
R   R CCC A  A SSS  SSS  OOO          *
                                  *
**********************************************************************
                                  *
L    SSS TTTTT                 *
L   S  S  T                 *
L   S    T  ::               *
```

L S S T ::
LLLLL SSS T ::

****

				0.0%
Liquid	3,411,450	96.5%	563,718	100.0%
Sludge	0	0.0%	0	0.0%
Total	**3,535,272**	**100.0%**	**563,718**	**100.0%**

[92] Smith, J.D., 1991. Cement Kilns 1991, *EI Digest*, Environmental Information, Ltd. August 1991.

[a] Reflects 1990 fuel consumption for the 71 facilities for which data were available.

[b] Reflects 1985 fuel consumption for the 65 facilities for which data were available.

[c] These units have been converted to Kcals from Btus as reported.

Source: Facility responses to the 1991 PCA survey.

addition, though several facility operators have reported that they have the capacity to burn hazardous waste sludges,[93] none (in the 1991 PCA survey) reported burning waste in this form.

Hazardous Waste Fuel Technologies

Several different technologies are employed to feed hazardous waste fuels into cement kilns. These different methods are important in that they dictate the types of wastes that a kiln can burn (i.e., liquid, sludge, or solid) and the location of the waste entry point relative to the flame in the kiln. In general, there are four important types of feed systems:

- Liquid feed systems, whereby liquid waste fuels are fed either through primary (fossil fuel) fuel ports or through similar ports in the hot end of the kiln;
- Sludge feed systems, which are similar to liquid feed systems except that they have higher solids, particle size, and viscosity tolerances;
- Dry solids systems, in which dry, finely divided waste particles (like coal dust) are blown into the flame area of the kiln; and
- Container feed systems, in which small buckets or bags are fed to the mid-section or calcining zone of the kiln. In wet process kilns, containers are fed at the mid-point of the kiln, while in preheater/precalciner kilns, containers are fed at the cool end, between the preheater and the rotating kiln body.

Relevant Environmental Regulations

Until August 1991, the burning of hazardous waste as fuel in cement kilns was exempt from RCRA permitting requirements under the premise that this practice constituted recycling. As a guideline for identifying recycling, EPA established a minimum waste heating value limit of 2,780 Kcal/kg. Hazardous waste fuel burners meeting this limit were required to notify EPA of their activities, obtain an EPA identification number, and maintain certain records (40 CFR 266.36).

On February 21, 1991 (56 FR 7134), EPA promulgated new rules to control the burning of hazardous waste in boilers and industrial furnaces. The so-called Boiler and Industrial Furnace (BIF) Rule controls the emissions of toxic organic compounds, toxic metals, hydrogen chloride (HCl), chlorine gas (Cl_2), and particulate matter from boilers and industrial furnaces that burn hazardous wastes. In particular, the BIF Rule establishes, at 40 CFR Part 266, Subpart H, the following regulatory compliance criteria:

- Demonstrate 99.9999 percent destruction or removal of dioxin-listed wastes and 99.99 percent destruction or removal of all other hazardous organic constituents;
- Adhere to limits on carbon monoxide and/or hydrocarbon flue gas concentrations;

[93] U.S. Environmental Protection Agency, 1990. *Commercial Combustion Capacity for Hazardous Waste Sludges and Solids*, Office of Solid Waste, Washington, D.C. August 1990.

- ù Meet risk-based (i.e., health-based) emission limits for four carcinogenic metals (arsenic, beryllium, cadmium, and chromium), six noncarcinogenic metals (antimony, barium, lead, mercury, silver, and thallium), HCl, and Cl_2. Under EPA's tiered approach to metal standards, higher emissions rates and feed rates are permitted as more detailed, site-specific emissions testing and dispersion modeling are conducted;

- ù Limit particulate matter emissions to 0.08 gr/dscf, corrected to 7 percent oxygen (the same standard required of hazardous waste incinerators); and

- ù Comply with general facility standards specified under 40 CFR 264 for hazardous waste treatment, storage, and disposal facilities.

Affected facilities were given until August 21, 1991 to notify EPA of their waste burning practices and their plans for certifying precompliance with the rule. With few exceptions, BIF operators were required to certify compliance with interim status standards by August 21, 1992. The rule did not place a deadline on final permit decisions. [Note to reader: EPA recently granted a stay to the two-part test.]

2.3 SUMMARY AND RELEVANCE TO SUBSEQUENT CHAPTERS

This chapter presented an overview of the cement industry and the basic cement manufacturing process. The discussion of the industry's structure and description of kiln technology presented herein will assist the reader in understanding the issues raised in subsequent chapters of this report. Specifically, the overview of the cement industry serves as an introduction that will result in a clearer understanding of the economic impacts of potential CKD regulation (see Chapter 9). The discussion of production technologies provides the reader with the industry-specific knowledge needed to understand the current CKD collection, recycling, and management practices discussed in Chapters 3 and 4 and management alternatives presented in Chapter 8. Finally, the last section of this chapter on process inputs will help the reader understand the connection between raw material and fuel inputs to cement making and the chemical characteristics of CKD, a topic that is discussed more fully in Chapter 3.

CHAPTER TWO

CEMENT INDUSTRY OVERVIEW

2.0 INTRODUCTION AND DESCRIPTION OF CKD 1

2.1 CEMENT INDUSTRY STRUCTURE AND CHARACTERISTICS 1

2.1.1 What Is Cement? 1

2.1.2 The Cement Industry 5

2.2 CEMENT MANUFACTURING 9

2.2.1 The Basic Production Process 10

Mining 10

Crushing 10

Grinding and Blending 13

Pre-Drying 13

Drying and Preheating 13

Calcining 15

Burning 15

Cooling 15

Finish Milling/Loading 16

2.2.2 Kiln Design 16

Wet Process Kiln 18

Dry Process Kiln 19

Preheater Kiln 21

Precalciner Kiln 23

Semidry Process Kiln 23

Trends in Kiln Technology and Use 25

2.2.3 Process Inputs 26

Raw (Feed) Materials 26

Fuels 33

Fossil Fuels 37

Non-hazardous Waste Fuels 39

Hazardous Waste Fuels 40

Overview of the Hazardous Waste Fuels Industry 40

Extent of Hazardous Waste Consumption by Cement Kilns and Types of Waste Burned 41

Hazardous Waste Fuel Technologies 42

Relevant Environmental Regulations 42

2.3 SUMMARY AND RELEVANCE TO SUBSEQUENT CHAPTERS 43

LIST OF EXHIBITS

Exhibit 2-1	General Cement Types and Uses	2
Exhibit 2-2	1990 Clinker Production by State	6
Exhibit 2-3	Geographic Distribution of Active Portland Cement Production Facilities in 1991 in the U.S.	7
Exhibit 2-4	U.S. Clinker Capacity for the Period 1973-1991	9
Exhibit 2-5	Steps in the Manufacture of Portland Cement	11
Exhibit 2-6	Material Temperature Ranges in the Kiln Portion of the Cement Manufacturing Process	14
Exhibit 2-7	Typical Energy Requirements for Each Kiln Type	18
Exhibit 2-8	Typical Process Flow Diagram for a Wet Process Cement Kiln	20
Exhibit 2-9	Typical Process Flow Diagram for a Suspension Flash Preheater Cement Kiln	22
Exhibit 2-10	Typical Process Flow Diagram for a Precalciner Coal and Waste Fired Cement Kiln	24
Exhibit 2-11	Age and Capacity of Existing Kilns	25
Exhibit 2-12	Feed Mixtures in 1990	28
Exhibit 2-13	Feed Mixtures in 1985	29
Exhibit 2-14	Raw Material Consumption in 1990 and 1985	30
Exhibit 2-15	Typical Composition of Raw Materials	31
Exhibit 2-16	Typical Feed Mixtures in 1990	32
Exhibit 2-17	Cement Kiln Fuel Consumption in 1990 and 1985	34
Exhibit 2-18	Cement Kiln Fuel Mixtures in 1990	35
Exhibit 2-19	Cement Kiln Fuel Mixtures in 1985	36
Exhibit 2-20	Average Coal Composition by Rank	38
Exhibit 2-21	Coal Producing Regions of the United States and Coal Types Produced	38

Exhibit 2-22 Nominal Fossil Fuel Prices in 1985 and 1990 39

Exhibit 2-23 Breakdown of Solid Waste Fuel Consumption 40

Exhibit 2-24 Breakdown of Hazardous Waste Fuel Consumption 41

CHAPTER THREE

CKD GENERATION AND CHARACTERISTICS

3.0 INTRODUCTION

Cement production processes in current use in the U.S. generate CKD as an intrinsic process residue. During cement production, kiln combustion gases flow countercurrent to the raw feed and exit the kiln under the influence of induced draft fans. The rapid gas flow and continuous raw feed agitation are turbulent processes that result in large quantities of particulate matter being entrained in the combustion gases. The entrained particulate matter (as well as various precipitates) is subsequently removed from the kiln exhaust gases by air pollution control equipment; this particulate matter constitutes CKD.

For purposes of this report, as discussed in greater detail later in this chapter, *gross CKD* constitutes the dust collected at the air pollution control device(s) (APCDs) associated with a kiln system. Gross CKD is generated as an inherent process residue at all cement plants, though the fate of this material varies by facility. After collection, gross CKD is either *recycled* back to the kiln system or removed from the kiln system as *net CKD*. Net CKD is either treated and returned to the kiln system, disposed in an on-site waste management unit, or sold or given away for beneficial use. Exhibit 3-1 illustrates the potential management pathways for gross CKD. Although a number of plants directly recycle all gross CKD back to the kiln system, most plants remove a significant quantity of CKD from the system, for subsequent treatment and recycle back into the kiln, disposal, or for beneficial use.

Although CKD generation is unavoidable, the amount and characteristics of the dust that is generated (and the degree to which it is recycled or reused) can be influenced by several factors. These factors include kiln type, cement production rate, raw feed material types and proportions, fuel type(s), and the types and numbers of APCDs employed. Through variations in these factors, many facilities recycle some portion of their generated dust back to the kiln. This chapter presents information on CKD generation rates and characteristics (including current recycling practices and limitations on CKD that is returned to the kiln system) and describes the physical and chemical characteristics of CKD. Finally, for the interest of the reader, this chapter also presents information on the characteristics of clinker materials.

3.1 CKD GENERATION

As mentioned above, gross CKD generation is defined in this report as the collection of dust via APCDs from cement kiln exhaust gases. This definition excludes that portion of generated CKD that passes the APCDs and exits the kiln system with the exhaust gases. Based on typical APCD efficiency standards, generally between 98 and 100 percent of all particulate matter is captured before exiting the kiln system.[1]

---

[1] Engineering-Science, 1987. Background Information Document For The Development of Regulations To Control The Burning of Hazardous Wastes In Boilers and Industrial Furnaces. Vol. II: Industrial Furnaces. January, 1987. p. 3-47.

Exhibit 3-1

Flow Chart of Gross CKD Management Pathways

Based on an extrapolation of the data supplied to EPA by respondents to the 1991 PCA Survey, which represents data from 64 percent of active U.S. cement kilns,[2] the U.S. cement industry generated an estimated 12.9 million metric tons (14.2 million tons) of gross CKD and 4.6 million metric tons of net CKD in 1990. Operators of U.S. kilns recycled about 8.3 million metric tons, or 64 percent, of the gross CKD. This section discusses how CKD is collected, provides information on plant level CKD generation rates, and finally, addresses factors that may affect gross CKD generation, recycling rates, and net CKD generation.

3.1.1 Dust Collection Devices

APCDs are used to limit dust emissions from the kiln system to the atmosphere. The combustion gases that exit the kiln consist primarily of carbon dioxide, water, fly ash (i.e., fine solid particles of ashes, dust, and soot from burning of fuels), sulfur, and nitrogen oxides. The components of these gases are derived from the combustion of fuels, contaminants (organic and

[2] Operators of 144 kilns provide usable data in response to the PCA Survey; there are approximately 225 kilns in the U.S. industry.

inorganic) in the kiln solids, small particles of feed and clinker material, and (for wet kilns) slurry water. After passing through the air pollution control system, the remaining combustion gases, which are discharged through a stack, consist primarily of carbon dioxide and water.[3] Undesirable contaminants (in terms of clinker quality) may volatilize in the burning zone of the kiln and precipitate as alkalies, sulfates, and chlorine compounds to become part of the CKD.[4]

CKD as collected is a fine-grained, solid, highly alkaline material that is generated at a temperature near 1,482°C (2,700°F). These characteristics tend to limit the types of dust collection devices that can be used to control air pollutant emissions from cement kilns. For example, because its fine-grained nature (diameter ranging from near zero micrometers or microns [μm] to greater than 50 μm) allows CKD to be easily entrained in exhaust gases, settling chambers that rely on gravity to separate particulate matter from a gas stream can only be used as a primary dust collection device to remove coarse dust particles and, in general, must be combined with more complex devices such as fabric filters (i.e., baghouses) or electrostatic precipitators. Wet scrubbers, commonly used in many mineral processing industries, cannot be used in the cement industry because adding water to the captured CKD causes it to harden ("set up") due to its cementitious properties.

The predominant APCDs in use at cement plants are electrostatic precipitators (ESPs) and fabric filters arrayed in baghouses. Both are often preceded by one or more cyclones. Additional APCDs include gravity/inertial separators and granular bed filters. Dust collection systems at cement plants may involve a combination of the above units. These systems typically remove dust at an efficiency ranging from 98 to nearly 100 percent.[5] Each of these technologies is described below in Exhibit 3-2 and is illustrated in Exhibit 3-3.

Dust collection systems are sensitive to the temperature of the inlet gases because very low or high temperatures may damage APCD components; the moisture and sulfur content of the gases require that the temperature be controlled within a set range. For example, moisture can condense in a baghouse or in an ESP when the temperature falls below the dewpoint of the gases. Such condensation can cause plugging problems and result in corrosion of the dust-collection equipment. A conservative minimum dust collector inlet temperature should be 176°C to allow for the additional temperature drop that may occur within a baghouse. At the other end of the range, the temperature of gases passing through most baghouses cannot exceed 299°C before damage to the filters occurs.[6]

Exhibit 3-4 summarizes the quantities of CKD collected in 1990 by APCD type among respondents to the 1991 PCA Survey. APCD types are characterized according to the four choices provided in the survey: baghouse, multiclone, ESP, or other APCD. Some respondents reported quantities for systems with two different APCD types. This exhibit shows that ESPs and baghouses in isolation are the predominant APCDs used by facilities. These two types of devices collected approximately 65 percent of the CKD generated by the 123 kilns for which survey responses are available. In contrast, 23 percent of the survey respondents collected CKD

---

[3] Engineering-Science, 1987, *op. cit.*, p. 3-4.

[4] Kohlhaas, B., *et al.*, 1983. *Cement Engineer's Handbook*. Bauverlag GMBH, Wiesbaden and Berlin. p. 624.

[5] Engineering-Science, 1987, *op. cit.*, pp. 3-47 and 3-49.

[6] Peray, Kurt E., 1986. *The Rotary Cement Kiln*. Chemical Publishing Co., Inc. New York, NY. p. 172.

with a multiclone in combination with a baghouse in 1990. Other combinations accounted for the remaining 12 percent of the CKD collected. Very few survey respondents indicated "other" to describe their APC system.

Exhibit 3-2

Air Pollution Control Devices Used at Cement Kilns[a,b]

APCD	Description
Electrostatic Precipitators	One or more high intensity electrical fields are generated and cause particles to acquire an electrical charge. These charged particles migrate to a collecting surface that has the opposite electrical charge. The collecting surface may be wet or dry. Facility operators then retrieve the captured CKD. One advantage of this technology is that flow is not restricted during collection. Collection efficiencies can be as high as 99.75 percent.
Fabric Filters	Filters remove particulate matter from gas streams by retaining the particles in a porous structure, and are typically used in series to form a baghouse. The porous structure is generally a woven or felt fabric with a retention efficiency that improves as the interstices fill with captured dust, but with the negative effect of increased flow resistance. Thus, regular filter cleaning is required to maintain efficiency. Baghouse filters can also be constructed of siliconized glass fibers (i.e., fiberglass). Fabric filters can remove submicron-sized particles at collection efficiencies as high as 99.95 percent.
Cyclones	A vortex within a collector propels particles to deposition areas for removal. Cyclones may be operated either wet or dry. They deposit the collected particulate matter into a hopper for eventual collection. Cyclones have collection efficiencies that range from 58 to 97 percent. Multiple cyclones used as part of one unit are referred to as multiclones. Multiclones have collection efficiencies that range from 85 to 94 percent for dust particles with diameters of 15 to 20 microns.
Gravity/Inertial Separators	These devices collect particulate matter by gravity or centrifugal force, but do not depend upon a vortex as do cyclones. Examples include settling chambers, baffled chambers, louvered chambers, and devices in which the gas and particulate mixture passes through a fan. In general, collectors of this type are of relatively low collection efficiency and are frequently followed by other types of collectors. Gravity settling chambers remove coarse dust particles at collection efficiencies ranging from 30 to 70 percent.
Granular Bed Filters	Dust is captured and bound on a porous medium through the principle of adsorption. The most commonly used medium is granular activated carbon (GAC). Collection efficiencies have been reported to be as high as 99.9 percent.

[a] Kohlhaas, B., *et al.*, 1983. *Cement Engineer's Handbook.* Bauverlag GMBH, Wiesbaden and Berlin. p. 635.

[b] Duda, W.H., 1976. *Cement-Data-Book: International Process Engineering in the Cement Industry.* Bauverlag GMBH Wiesbaden and Berlin, pp. 403-417.

Exhibit 3-3

Schematic Diagrams of Common Types of Air Pollution Control Devices

Exhibit 3-3 (continued)

Schematic Diagrams of Common Types of Air Pollution Control Devices

Exhibit 3-4

1990 Gross CKD Collection by Different Types of Air Pollution Control Devices[a]

APCD	No. of Facilities with APCD Type	Percent of Facilities	Gross CKD Generation[b] (Metric Tons)			
			CKD Collected	Cumulative CKD Collected	Percent of Total CKD Collected[c]	Cumulative Percent Collected
ESP	37	50.7	3,578,934	3,578,934	41.1	41.1
Baghouse	19	26.0	1,662,784	5,241,718	19.1	60.2
Multiclone with Baghouse	7	9.6	2,128,021	7,369,739	24.4	84.6
Baghouse with ESP	5	6.8	678,642	8,048,381	7.8	92.4
Multiclone with ESP	4	5.5	552,804	8,601,185	6.3	98.7
Baghouse and Other	1	1.4	112,945	8,714,130	1.3	100.0
Total	**73**	**100.0**	**8,714,130**	**8,714,130**	**100.0**	**100.0**

[a] Based on the usable responses from 73 facilities reported in the PCA Surveys.

[b] This exhibit presents only APCD collection quantities, while the remainder of this chapter considers only quantities of CKD reported as gross or generated CKD. A number of facilities reported gross CKD generation rates that were different than the associated CKD collection rates reported for the APCDs.

[c] (Collected CKD by given APCD) ÷ (Total CKD Collected) × 100

Responses in this category are either variations on one of the previously discussed APCDs (e.g., cyclones as opposed to multiclones) or consist of uncommon APCDs (e.g., fallout chambers).

3.1.2 Plant-Level CKD Generation Rates

To better understand the nature of contemporary CKD practices, EPA has performed an extensive evaluation of plant-level gross and net CKD generation rates. Any significant patterns with respect to CKD generation and in-line recycling could have important implications with respect to EPA's analysis of the adequacy of current management practices and the feasibility of CKD management alternatives.

As stated previously, CKD generation rates vary widely among facilities on both a gross and net basis. These rates do not, however, necessarily vary in direct proportion with one another. A scatter plot of gross versus net CKD generation for plants responding to the 1991 PCA Survey is presented in Exhibit 3-5. As this exhibit demonstrates, there is no clear, apparent relationship between the amount of gross CKD generated and the amount of net CKD generated, even within a given process type. Facilities that generate large quantities of gross CKD do not necessarily generate large amounts of net CKD. Conversely, a facility may generate moderate quantities of CKD on a gross basis, but may be one of the larger net CKD generators by virtue of the fact that it recycles none of its

Exhibit 3-5

Relationship Between Net and Gross CKD Generated in 1990

Source: 1991 PCA Survey Responses.

Note: For clarity of presentation, available data on the LaFarge Corporation, Alpena facility was excluded from the above exhibit because it was an outlier. In 1990, this facility generated about 650 thousand metric tons of gross CKD and about 430 thousand metric tons of net CKD.

CKD. Therefore, gross CKD generation rate is not an accurate indicator of the magnitude of waste management issues at individual cement facilities.

In comparison with the other kiln types, operators of preheater/precalciner kilns recycle higher percentages of the gross CKD that they generate; this difference is especially apparent at the higher gross CKD generation rates (i.e., more than 200,000 metric tons per year). Moreover, while there is a considerable amount of scatter in the data, it appears that at lower gross CKD generation rates (less than 200,000 metric tons per year), the distribution of points corresponding to both the wet and the preheater/precalciner plants follows one of two patterns: 1) the points fall along the X-axis (net CKD is zero or close to zero); or 2) the points fall along a diagonal line (net CKD equals or is close to gross CKD), meaning that recycled CKD is or is close to zero. Plants operating long dry kilns, in contrast, are more difficult to categorize with respect to CKD generation trends.

To further examine industry-wide CKD generation rates and trends, EPA analyzed CKD generation and management data comprising useable results from PCA Survey responses covering 79 active U.S. cement plants; the data obtained have been tabulated and, for purposes of presentation, split into ten groups of eight facilities.[7] Exhibit 3-6 shows gross and net CKD generation for these groups arrayed in descending order, by net CKD generation. The top ten percent of facilities generated about 2.25 million metric tons of gross CKD in 1990, which was two to three times more than the gross CKD generated by any other group (except for the seventh decile), and was about 10 times higher than the gross CKD generated by the sixth decile. The gross CKD generation rates of the plants in the remaining groups do not differ markedly, with most generating between 0.5 and a little more than one million metric tons per year, with an average of about 700,000 metric tons per year.

It is apparent from the relative heights of the bars on the right half of the diagram that approximately one-half of all 79 plants in the sample directly recycle all, or almost all, of the gross CKD that they generate. In general, it also would appear, based upon an examination of the heights of the gross CKD bars of deciles 1-5 with those of deciles 6-10, that the gross CKD generation rates of the groups with very high aggregate recycling rates are comparable to those of the groups generating significant quantities of net CKD. Finally, it is clear that some facilities in all of these groups recycle significant quantities of CKD, due to the substantial differences in gross and net CKD generation rates in each group represented.

Plant-by-plant net CKD generation rates vary dramatically among facilities in the U.S. cement industry. The top ten facilities together accounted for over 50 percent of the total net CKD generated in 1990. In fact, the top three facilities alone accounted for close to 30 percent of the net CKD generated during this period. To determine whether the share of net CKD generated was simply a function of facility size or throughput, the Agency compared net CKD generation to clinker capacity. Exhibit 3-7 shows the share of total net CKD and clinker production capacity accounted for by each group of eight facilities. The top ten percent accounted for almost 47 percent of net CKD generated in 1990. Although as a group these facilities are also the top ten percent in terms of production capacity, they represent only about 15 percent of total industry capacity. In the remaining groups, no pattern with respect to net CKD generation and production capacity emerges. For example, the seventh decile represents close to 12 percent of capacity but only two percent of net CKD generation, whereas the second

[7] The last group contains only seven facilities.

decile represents less capacity (9.4 percent) but accounts for a substantially larger share of net CKD generation (19.7 percent).

Exhibit 3-6

Gross and Net CKD Generated (1990)

Source: 1991 PCA Survey Responses.

Note 1: Data on gross CKD generated was not available for one data point in the fifth decile and one data point in the eighth decile. Therefore, the gross CKD indicated for these two deciles is the total generated at only seven of the eight facilities in each decile.

Note 2: The last decile contains only seven facilities.

Exhibit 3-7

Share of Net CKD Generated and Clinker Production Capacity (1990)

Source: 1991 PCA Survey Responses.

Note 1: Data on clinker production capacity was not available for one data point in the third decile and one data point in the last decile.

Note 2: The last decile contains only seven facilities.

Exhibit 3-8 lists seven facilities whose share of net CKD generated in 1990 was three to four times higher than their share of clinker production capacity. All seven facilities, not surprisingly, fall in the top two deciles of net CKD generators. The facilities that display the sharpest difference between shares of clinker production capacity and net CKD generation are the LaFarge, Alpena, facility, which is also the largest generator of net and gross CKD, and the Holnam, Ada, facility. Five of the seven facilities in the exhibit have wet process kilns. With respect to fuel usage, there appears to be a fairly even distribution between hazardous and non-hazardous waste burners. Five of the seven facilities displayed in Exhibit 3-8 are Holnam facilities and the remaining two are owned by LaFarge Corporation.

Exhibit 3-8

Facilities With High Net CKD Generation Relative to Clinker Capacity

Facility	Share of Clinker Capacity (1)	Share of Net CKD Generated (2)	Ratio (2)/(1)	Fuel	Process
LaFarge, Alpena	3.28	13.50	4.12	H	Dry Long
Holnam, Holly Hill	2.15	8.11	3.77	H	Wet
Holnam, Clarksville	2.22	7.11	3.20	H	Wet
Holnam, Ada	1.06	4.50	4.25	N	Wet
Holnam, Florence	0.82	3.05	3.72	N	Wet
Holnam, Fort Collins	0.77	2.67	3.47	N	Dry PH/PC
LaFarge, Fredonia	0.65	2.11	3.25	H	Wet

Conversely, there are several facilities that generate little or no net CKD; however, these facilities account for a fairly large percentage (around two percent or more) of clinker capacity. The Kaiser Cement, Cupertino, facility accounted for 2.73 percent of total clinker capacity, yet generated almost zero percent of total net CKD in 1990. Most of these facilities operate dry kilns (usually preheater/precalciner kilns) and do not burn hazardous waste fuels.

Exhibit 3-9 provides information on the percentages of gross CKD that were recycled, sold, and wasted in 1990 for the ten groups of eight facilities, again arranged in descending order by net CKD generation rate. The percentage of gross CKD recycled in 1990 ranges from about 34 percent for the top net CKD generators all the way up to 100 percent. The percentage sold does not follow any discernible pattern and generally varies from zero to approximately 10 percent, with the marked exception of the sixth decile. The facilities in the sixth decile sold as much as 26.7 percent of the gross CKD they generated in 1990. The last three deciles, which consist of facilities that recycle large portions of their gross CKD, not surprisingly sell negligible quantities of CKD. Finally, the percentage of CKD wasted increased marginally from 53.7 percent in the top decile to 56.6 percent in the second decile and then decreased substantially in each decile, with the exception of the sixth, reaching zero in the tenth and final group.

Exhibit 3-9

Percentages of Gross CKD Recycled, Sold, and Wasted (1990)

Source: 1991 PCA Survey Responses.

Note 1: Data on CKD recycled was not available for one data point in the fifth decile and one data point in the eighth decile.

Note 2: The last decile contains only seven facilities.

Finally, the Agency looked at percentages of CKD recycled at the plant level based on the individual kiln type and fuel usage. Of the 79 facilities for which PCA data are available, 48 operate dry kilns and the remaining 31 operate wet kilns. Of the 48 dry kiln facilities, 14 are equipped with dry long kilns and 34 with preheaters/precalciners (Ph/Pc).

Exhibit 3-10 summarizes recycling rates among the 48 facilities in EPA's data base that operate dry kilns. Hazardous waste burners in general do not appear to be recycling as much as non-hazardous waste burners, and operators of dry long kilns seem to recycle less than those operating Ph/Pc kilns. Low recycling rates, however, do not always imply that a large percentage of CKD is wasted. For example, the Heartland Cement Company's Independence facility, which operates a dry long kiln and burns hazardous waste, wastes only about 8.5 percent of the CKD it generates even though it recycles only around 37 percent. The facility sold close to 55 percent of the gross CKD it generated in 1990. Similarly, Southdown's Dixie facility, a hazardous waste burner operating a Ph/Pc kiln, sold 44 percent of its CKD in 1990 and wasted only 16 percent.

Exhibit 3-10

Recycling Rates Among Facilities That Operate Dry Kilns

Fuel Type	Number of facilities	Percent of CKD Recycled (Number of Facilities)		
		>50%	>90%	100%
Facilities That Operate Dry Long Kilns				
Hazardous Waste	5	2	1	0
Non-Hazardous Waste	9	6	3	1
All Fuels	14	8	4	1
Facilities That Operate Dry Ph/Pc Kilns				
Hazardous Waste	5	3	1	1
Non-Hazardous Waste	29	21	18	12
All Fuels	34	24	19	13
Facilities That Operate Dry Kilns (Long or Ph/Pc)				
Hazardous Waste	10	5	2	1
Non-Hazardous Waste	38	27	21	13
All Fuels	48	33	23	14

Note: Data are not available on one facility that operates dry long kilns and uses non-hazardous fuels and on one facility that operates dry Ph/Pc kilns and uses non-hazardous waste fuels.

Among facilities that burn non-hazardous waste fuels and operate Ph/Pc kilns, an interesting pattern can be observed. These facilities fall at one of two extremes -- they either recycle a large percentage or none of their gross CKD. In 1990, as shown in Exhibit 3-10 above, 18 of the 29 Ph/Pc plants for which data are available recycled over 90 percent of the gross CKD they generated, and three others recycled over 50 percent. In contrast, six of the remaining eight facilities recycled zero percent of the gross CKD they generated (though the operators of two facilities, LaFarge, Davenport and Monarch, Humboldt, each sold over 40 percent of their CKD).

Exhibit 3-11 summarizes recycling rates among the 31 facilities in EPA's data base that operate wet kilns. As shown in this exhibit, operators of facilities with wet kilns do not appear to recycle as much as dry kiln operators. The most glaring difference is the fact that no facilities that operate wet kilns recycle 100 percent of the CKD they generate. Among hazardous waste burners, only two of the eight facilities recycled over 50 percent of their CKD in 1990, and none recycled over 90 percent. The percentage of CKD wasted is high, with five of the eight facilities wasting over 50 percent of their CKD. Among the non-hazardous waste burners, 10 out of 23 recycled over 50 percent and three recycled over 90 percent. A total of six facilities sold over 40 percent of their CKD in 1990. The operator of the Holnam facility in Seattle recycled only about 51 percent of the CKD it generated, but sold the rest.

Exhibit 3-11

Recycling Rates Among Facilities That Operate Wet Kilns

Fuel Type	Number of facilities	Percent of CKD Recycled (Number of Facilities)		
		>50%	>90%	100%
Hazardous Waste	8	2	0	0
Non-Hazardous Waste	23	10	3	0
All Fuels	31	12	3	0

Finally, because of the observed wide variability in gross and net CKD generation rates, as well as the demographic characteristics (i.e., age distribution) of domestic cement kilns, EPA examined whether the age of individual cement kilns appears to influence the generation of CKD, on either a gross or net basis. The first step was to perform a simple linear correlation analysis of CKD generation and kiln age for the kilns within the sample of 79 cement plants providing useable data. The Agency conducted this test using all plants, then repeated the procedure separately for plants both burning and not burning hazardous waste fuels, and for wet and dry process kilns (i.e., the Agency conducted a set of five correlation analyses). Results of this exercise showed that for gross CKD generation, the correlation coefficients were negative and statistically significant at the 95 percent confidence level for all kilns, non-hazardous waste-burning kilns, wet process kilns, and dry process kilns; correlation coefficients for these groups ranged from -0.26 to -0.38. That is, the older kilns generate less gross CKD than the newer kilns, all else being equal. However, on a net CKD basis, no such relationship is apparent; no statistically significant correlation coefficients (at the 95 percent confidence level) were found within any of the five groups with respect to kiln age.

Because, as documented in Chapter 2, kiln capacity (and therefore, potential gross CKD generation) has increased over time, EPA proceeded to repeat the above analysis using CKD generation data that were normalized for clinker capacity. That is, we divided the per-kiln CKD generation rates by reported kiln capacity to eliminate the potential effects of the trend toward larger cement kilns over the past few decades.[8] Results of this exercise show that for both gross and net CKD, the normalized CKD generation rates are not related to kiln age for any of the five groups (i.e., none of the correlation coefficients are significantly different than zero). EPA therefore concludes that CKD generation is not related to kiln age, even if adjusted for fuel type or processing technology.

3.1.3 Quantities and Fate of CKD Generated

In an effort to further characterize the highly variable gross and net CKD generation rates described above, EPA conducted an analysis of potentially significant cement kiln design and operating variables. The two primary factors that are identified and examined in this section are kiln process type (wet or dry), and fuel type (i.e., whether the kiln is or is not fired with hazardous waste). As discussed earlier in this chapter, U.S. cement plants generated a total of about 12.9 million metric tons of gross CKD in 1990, and 4.6 million metric tons of net CKD, that is, material removed from the kiln system. As discussed further in Chapter 8, few practical process modifications can alter gross CKD generation rates. Nonetheless, it is important to look at differences between kiln types and operating practices to identify the process factors that may influence the gross quantity of dust generated.

Exhibit 3-12 presents tabulated data that summarize CKD generation rates per ton of clinker produced as a function of fuel usage (i.e., burning or not burning hazardous waste) and process type (i.e., wet, dry long, dry with preheater/precalciner). CKD generation data per ton of product eliminate differences in generation rates that are a function of differences in kiln size; this allowed the Agency to examine whether there are differences in generation rates that appear to be directly related to process types and/or fuel usage.

Differences in CKD Generation Rates Across Process Types

Exhibit 3-12 reveals the following relationships with respect to CKD generation across different process types:

- Wet kilns, which comprise 36 percent of all kilns in Exhibit 3-12, on average generate less gross CKD per ton of product than dry kilns. The data indicate that wet kilns generate about 24 percent less CKD per ton of product than dry long kilns and about eight percent less than Ph/Pc kilns.

- Operators of wet kilns, however, recycle a lower percentage of CKD than operators of dry kilns; on average, they generate more net CKD per ton of product (9.5 percent more than dry long kilns and 167 percent more than Ph/Pc kilns).

- With respect to dry kilns, Ph/Pc kilns generate about 17 percent less gross CKD and about 60 percent less net CKD per ton of product than dry long kilns.

---

[8] Ideally, the data would have normalized using kiln-specific clinker production data. Because, as discussed above, such data are unavailable, EPA used clinker capacity data as the best available proxy.

Exhibit 3-12

Average CKD Generation Rates Per Ton of Product (1990)[a]

Kiln Type	No. of Kilns	CKD Per Ton of Product Ratio[b]		
		Gross CKD	Net CKD	CKD Recycled[c]
Wet Kilns				
Burning Hazardous Waste	13	0.219	0.163	0.056
No Hazardous Waste	28	0.179	0.093	0.086
All Fuels	41	0.192	0.115	0.077
Dry Long Kilns				
Burning Hazardous Waste	13	0.236	0.131	0.105
No Hazardous Waste	19	0.264	0.087	0.177
All Fuels	32	0.253[c]	0.105[c]	0.148
Dry Preheater/Precalciner Kilns				
Burning Hazardous Waste	6	0.175	0.071	0.104
No Hazardous Waste	34	0.215	0.038	0.177
All Fuels	40	0.209[c]	0.043[c]	0.166
All Dry Kilns				
Burning Hazardous Waste	19	0.217	0.112	0.105
No Hazardous Waste	53	0.233	0.055	0.178
All Fuels	72	0.228	0.070	0.158
All Kilns				
Burning Hazardous Waste	32	0.218[c]	0.133[c]	0.085
No Hazardous Waste	81	0.214[c]	0.068[c]	0.146
All Fuels	113	0.215	0.087	0.128

[a] Source: Bureau of Mines.

[b] In general, Gross CKD = Net CKD + CKD Recycled.

[c] Computed from Bureau of Mines data.

EPA has evaluated the significance of these data further by performing pair-wise t-test comparisons of the average waste-to-product ratio value (means) provided in Exhibit 3-12. The results of this exercise demonstrate that there are no statistically significant differences (at a 95 percent confidence level) in the normalized gross CKD generation rates between any of the groups identified in the exhibit. That is, despite the apparent differences in average gross CKD generation rates per unit of product between, for example, hazardous waste-burning wet kilns and non-hazardous waste burning wet kilns, these differences are not sufficient, on a statistical basis, to indicate that these two groups are fundamentally different with respect to this variable.

In marked contrast, a number of statistically significant differences are apparent between various groups with respect to net CKD generation relative to production. Looking at the sample as a whole, the 32 kilns burning hazardous waste generate substantially more net CKD per unit of product, on average, than the 81 kilns that are not fired with this alternative fuel.

The difference (average of 0.113 versus 0.068 tons of net CKD per ton of product, respectively) is significant at the 99 percent confidence level. A similar pattern is observed within kiln type groups: both wet and dry kilns burning hazardous waste fuels have significantly higher (at a 95 percent confidence level) average net CKD generation rates than kilns of the same technology type that do not burn hazardous waste fuels. Interestingly, the differences within the dry process kiln type category diminish when considering dry long and dry Ph/Pc kilns individually; although average net CKD generation rates are higher for the hazardous waste burners within each of these technology type sub-groups, the differences between these rates and those of the non-hazardous waste burning kilns within their respective sub-groups are not statistically significant at a 95 percent confidence level.

Average normalized net CKD generation rates also appear to vary significantly by kiln technology type alone. Wet process kilns have average net dust generation rates that are significantly higher than those of dry process kilns, and within the dry process kiln type, dry long kilns generate significantly more net CKD per unit of product, on average, than Ph/Pc kilns. The significance levels for EPA's comparisons between these groups approach or exceed 99 percent.

Differences in CKD Generation Rates Across Process Types and Fuel Usage

Further examination of the data in Exhibit 3-12 reveals the following findings:

- Wet kilns that burn hazardous waste fuels generate about 22 percent more gross CKD per ton of product than those that do not burn hazardous wastes. In the case of dry kilns, the data suggest the opposite -- dry kilns that burn hazardous waste generate about 7 percent less gross CKD per ton of product.

- The inverse relationship between hazardous waste burning and gross CKD generation in dry kilns becomes more marked with increasing technological sophistication. Dry long kilns burning hazardous waste generate close to 11 percent less gross CKD per ton of product than dry long kilns not burning hazardous waste; Ph/Pc kilns that burn hazardous waste generate almost 20 percent less gross CKD per ton of product.

- Across all process types, operators of kilns that burn hazardous waste (representing almost 30 percent of all kilns), recycle significantly less CKD per ton of product than non-hazardous waste burners. The result is that hazardous waste burners generate almost twice as much net CKD per unit of product as non-hazardous waste burners, though they generate only about two percent more gross CKD.

- In the case of dry kilns, lower recycling rates (per ton of product) can be partly attributed to the fact that kilns burning hazardous waste generate lower quantities of gross CKD per ton of product than kilns that do not burn hazardous waste. Operators of dry kilns that burn hazardous waste, however, recycle a lower percentage of the gross CKD they generate than kilns that do not burn hazardous waste -- 48 percent compared with 70 percent, respectively.

Differences in Gross CKD Generation Rates

The observations highlighted above reveal that for the wet and dry kilns overall (i.e., regardless of which kilns burn hazardous waste), gross CKD generation rates per ton of product appear to be slightly lower in wet kilns (19.2 percent) than in dry kilns (22.8 percent). This finding supports at least one source that states wet kilns generate less gross CKD than dry kilns.[9]

Gross CKD generation rates per unit of product, when all kilns are considered together, are slightly higher for hazardous waste burners than for kilns not burning hazardous waste. When different process types are considered, this relationship holds true only for wet kilns. Therefore, there is no conclusive evidence indicating that burning hazardous waste results in increased gross CKD generation, though such a finding was indicated in an early EPA study on this topic.[10] One argument against this conclusion is that kilns that burn hazardous waste should generate less ash per unit of energy consumed than kilns that burn coal. Burning hazardous waste fuels, however, may allow the facility operator to burn a lower grade of coal (i.e., with a higher ash content) than it could otherwise, thus maintaining a relatively high overall ash content.

Differences in Net CKD Generation Rates

Based on observations from Exhibit 3-12, net CKD generation rates are higher in kilns burning hazardous waste. Although EPA has not found definitive evidence that burning hazardous waste causes increased net CKD generation rates, limited documentation suggests a link between the two variables. In one early study conducted by EPA in 1981, trial burns were conducted at three dry process cement kilns and two wet process kilns to compare results when coal was burned alone and when coal was co-fired with hazardous waste at unspecified rates. (None of these kilns was identified in the study.) In one of the dry process kilns, normal coal-fired operations generated approximately 91 metric tons per month of net CKD. When hazardous waste was co-fired, this figure increased to 1,800 metric tons per month, reportedly to keep system chloride levels within prescribed limits. Information on changes in the amount of dust generated at the other four facilities was not reported.[11]

More recent data are not adequate to support conclusions regarding any cause-and-effect relationship(s) between combustion of hazardous waste fuels and net CKD generation rates, because the available data were not collected over time and do not include observations obtained during both hazardous waste fuel burning and the absence of this practice at the same plants. Nonetheless, the data analyzed and presented in this report reflect the actual operating experience of the majority of active cement plants in the U.S. and do allow the Agency to make some interesting comparisons. These data show that within each kiln type group, on average, kilns fired with hazardous waste fuels have net CKD generation rates that are substantially higher than those of kilns not fired with hazardous wastes. In each of the three basic kiln type groups, net CKD generation, normalized for actual production rates, was from 50 to 87 percent higher in kilns burning hazardous wastes than in kilns not burning these alternative fuels. In addition, net CKD generation rates are substantially higher for wet kilns than for preheater/precalciner kilns, and are somewhat higher than for dry long kilns. This pattern is apparent in both fuel type groups.

---

[9] Engineering-Science, 1987, *op. cit.*, p. 3-12.

[10] *Ibid.*

[11] Engineering-Science, 1987, *op. cit.*, p. 4-18.

CKD Recycling

Although net CKD may be viewed as a waste, its nature as essentially an "off-spec clinker," or intermediate product, makes direct return to the kiln, or recycling, a desirable option for cement plant operators. If more CKD could be returned to the kiln system via recycling, less net CKD would be generated. Decreasing net CKD quantities reduces the quantity of dust that must be managed in some other manner. Moreover, reduced net CKD generation saves energy and raw materials through minimizing raw feed demand and heat lost to materials that are removed from the system and not productively used.

A variety of methods are currently used to directly return CKD to the kiln system. First, dust is injected, or insufflated, through or near the flame at the hot end of the kiln. Second, CKD is conveyed to a shroud, or sleeve, that embraces the middle of the kiln near the material inlet to the calcining zone. In both of these cases, CKD is mechanically conveyed by a screw conveyor from the APCD to the point of re-introduction to the kiln. Third, operators introduce CKD at the front end along with the raw feed. Alternatively, CKD can be returned to the kiln after first treating it for removal of undesirable contaminants (e.g., through leaching, volatilization, or recovery scrubbing). These approaches to returning CKD to the kiln are the subject of further elaboration in Chapter 8.

Conceptually, the ideal strategy for any cement plant operator would be to return all of the gross CKD to the process, which would eliminate any need to dispose of or find alternative uses for waste CKD. Returning CKD to the kiln system, however, involves balancing savings in resources, energy, and waste management costs with the costs of increased concentrations of certain CKD constituents and the capital and operating costs of the necessary equipment. While cement plant operators do typically recycle some portion of the gross CKD, the gradual accumulation of alkalies in the dust usually necessitates that some CKD be removed from the system as a net waste. Through recycling, chlorine and alkalies tend to accumulate in the gross CKD that is generated. These constituents can continue to build up in the kiln system as alkalies and alkali salts, which may impair the cement production process in three primary ways:

- Increased particulate matter emissions. As discussed in Sections 3.2.1 and 3.2.2, below, alkalies and chlorides may decrease the efficiency of ESPs, resulting in increased particulate matter emissions.[12]

- Kiln damage and/or preheater plugging. Alkali chlorides, which can damage kiln linings, condense more readily in the kiln than oxides, which help to protect kiln linings. Alkali chloride condensation can also lead to preheater plugging and ultimately to increased alkali recirculation.

- Inferior quality cement product. Alkali levels also affect the quality of the cement product. The American Society for Testing and Materials (ASTM) sets specific limits on alkali levels in portland cement. ASTM C 150 mandates that cement contain no more than 0.6 percent alkali.[13] This standard was created to

[12] Beers, A., 1987. New York State Legislature, Legislative Commission on Toxic Substances and Hazardous Wastes. Hazardous Waste Incineration: The Cement Kiln Option. December. p. 11.

[13] American Society for Testing and Materials, 1987. ASTM C150-86, Vol. 04.02. *Concrete and Aggregates*. p. 91.

minimize a detrimental phenomenon in concrete called alkali-aggregate reactivity.[14] Through this phenomenon, chemical reactions between the cement gel and the aggregates (i.e., gravel that is mixed with the cement to form concrete) cause the concrete to expand and may result in cracking or other structural defects. To limit alkali concentrations in the cement product, some CKD must typically be removed from the system.

Recycling Differences

To help identify some of the factors influencing recycling rates, it is useful to compare a facility that recycles all of its gross CKD to a facility that recycles none of its gross CKD. The operator of the active kiln at the Kaiser Cement Company in Cupertino, California, for example, recycles almost all (99.97%) of the gross CKD back to the raw feed. The unit is a dry process kiln with a preheater and precalciner, and is fired primarily with low-sulfur coal, and to a lesser extent, petroleum coke. The facility operators attribute the high recycling rate to the inherently low alkali, chloride, and sulfate levels in the raw material and fuel inputs.[15]

In contrast to the Kaiser Cupertino plant, the operator of the four active wet process kiln systems at Texas Industries, Inc., in Midlothian, Texas, recycles none of the gross CKD. Each kiln is fired with a mixture of coal, natural gas, petroleum coke, and liquid hazardous waste. According to the facility operator, the raw feed is high in alkalies, and because Texas Industries produces low-alkali cement, the operator believes that as generated CKD cannot be recycled back to the kiln.[16]

The idea that recycling rates are solely dependent on raw feed yields a simple generalization. Generally, higher alkalies should result in reduced recycling for a given cement grade. However, process and fuel differences can also significantly influence recycling rates. The remainder of this section discusses these differences in greater depth by examining the PCA Survey data for recycling rate differences across process type and fuel type. The influence of raw feed cannot be assessed in this analysis because appropriate raw feed characterization data are not readily available.

Exhibit 3-13 presents summary data that express CKD going to the various management pathways as a weight percent of gross CKD, as a function of whether they burn or do not burn hazardous waste, and process type (i.e., wet, dry long, and dry with preheater/precalciner). The data in Exhibit 3-13 demonstrate a number of interesting relationships that are outlined below. This discussion enhances the discussion relating to Exhibit 3-12, particularly with respect to the percentage of gross CKD that is disposed and sold.

Differences in Fate of CKD Across Process Types

Exhibit 3-13 reveals the following relationships with respect to CKD fate across different process types:

---

[14] Kosmatka, S. and Panarese, W., 1990. *Design and Control of Concrete Mixtures*. Portland Cement Association. Skokie, Illinois. pp. 42-43.

[15] U.S. EPA, 1992. Sampling Trip Reports.

[16] *Ibid.*

- Wet kilns generate, on average, 59 thousand metric tons of gross CKD, compared with about 69 thousand metric tons generated in dry long kilns and 60 thousand metric tons generated in Ph/Pc kilns. As previously noted, however, operators of wet kilns recycle a lower percentage of their gross CKD -- 45 percent in contrast with 65 percent in the case of dry long kilns, and 82 percent in the case of Ph/Pc kilns.

- The percentage of gross CKD that is sold is about five times higher for wet kilns than it is for dry kilns. Operators of wet kilns sell 13 percent of all the gross CKD they generate, compared with less than three percent for either category of dry kiln (though operators of hazardous waste-burning Ph/Pc kilns sold about 9.5 percent of their gross CKD in 1990).

- Despite the relatively large percentage of gross CKD that is sold by wet kilns, the lower percentage of CKD recycled by the operators of such kilns results in them wasting the highest percentage of gross CKD. In 1990, operators of wet kilns disposed of over 40 percent of all the CKD they generated. In the same year, dry long kiln operators disposed of about one-third of the CKD they generated, while the operators of Ph/Pc kilns disposed of only about 15 percent.

Differences in Fate of CKD Across Process Types and Fuel Usage

Examination of the fuel usage data in Exhibit 3-13 reveals the following relationships:

- Across all process types, hazardous waste-burning kilns generate, on average, more gross CKD than those not burning hazardous wastes. The difference is the greatest in the case of wet and Ph/Pc kilns, where hazardous waste burners generate almost twice as much gross CKD as non-hazardous waste burners. Part of this phenomenon is explained by the fact that kilns burning hazardous waste fuels tend to be larger than those not burning such fuels. The difference in size is apparent when Exhibit 3-13 is compared with Exhibit 3-12, where CKD generation rates have been normalized by production rates. For example, gross CKD per ton of product for wet kilns is only 1.2 times higher for hazardous waste burners than it is for non-hazardous waste burners (see Exhibit 3-12), though the former generate almost twice as much gross CKD as the latter in terms of absolute quantity (see Exhibit 3-13). In the case of dry kilns, gross CKD generated per ton of product is less for hazardous waste burners than it is for non-hazardous waste burners (see Exhibit 3-12), though the former generate larger average quantities of gross CKD (see Exhibit 3-13).

- Across all process types, operators of hazardous waste-burning kilns recycle a lower percentage of their gross CKD than those operating non-hazardous waste-burning kilns. Operators of wet kilns, as well as dry kilns that burn hazardous waste fuels, recycle almost 35 percent less of their gross CKD than those who do not burn hazardous waste fuels (34 percent compared with 52 percent in the case of wet kilns, and 55 percent compared with 83 percent in the case of dry kilns). Overall, kilns burning hazardous wastes generate about twice as much net CKD as a weight percentage of gross CKD than do kilns not burning hazardous wastes.

- This difference in recycling rates based on fuel usage is the most marked in the case of dry long kilns, where the percentage of gross CKD recycled by hazardous waste burners is only about half that of non-hazardous waste burners. Hazardous waste burners in this process type generate almost three times as much net CKD as a percentage of gross CKD -- 54 percent, compared with 20 percent in the case of non-hazardous waste burners.

Exhibit 3-13

Fate of CKD as a Percent of Gross CKD (1990)[a]

Fate of CKD as a Percent of Gross CKD (Averages)							
Kiln Type	No. of Plants	No. of Kilns	Average Gross CKD per kiln (metric tons)	Weight Percent of Gross CKD			
				Net	Recycled	Disposed	Sold[b]
Wet							
Burning Hazardous Waste	8	14	84,724	65.96	34.04	54.32	11.64
No Hazardous Waste	23	39	49,944	47.90	52.19	33.34	14.56
All Fuels	31	53	59,131	54.74	45.32	41.28	13.45
Dry Long							
Burning Hazardous Waste	5	15	69,081	54.35	45.65	53.05	1.31
No Hazardous Waste	8	19	68,707	19.65	80.39	17.28	2.37
All Fuels	13	34	68,872	35.01	65.01	33.11	1.90
Dry PH/PC							
Burning Hazardous Waste	5	6	94,253	29.02	70.98	19.53	9.49
No Hazardous Waste	28	51	56,389	17.06	83.73	14.97	2.09
All Fuels	33	57	60,374	19.03	81.63	15.72	3.31
All Dry Kilns							
Burning Hazardous Waste	10	21	76,273	45.41	54.59	41.21	4.20
No Hazardous Waste	36	70	59,732	17.87	82.69	15.69	2.18
All Fuels	46	91	63,549	25.50	74.90	22.76	2.74
All Kilns							
Burning Hazardous Waste	18	35	79,653	54.15	45.85	46.79	7.36
No Hazardous Waste	59	109	56,230	27.41	72.99	21.30	6.11
All fuels	77	144	61,923	35.77	64.51	29.27	6.50

[a] Based on usable responses from 1991 PCA Survey.

[b] "CKD Sold" quantities may also include CKD that was given away.

- No patterns emerge from the data in Exhibit 3-13 with respect to the percentage of gross CKD sold by operators of hazardous versus non-hazardous waste-burning cement kilns. In the case of wet kilns, hazardous waste burners sell a lower percentage of their CKD than non-hazardous waste burners, though the difference is not striking. In the case of dry kilns, however, hazardous waste burners sold a higher percentage of the CKD they generated in 1990 than non-hazardous waste burners. Operators of Ph/Pc kilns that burned hazardous waste fuels sold over four times more, as a percentage of gross CKD, than did the operators of the Ph/Pc kilns that do not burn hazardous waste fuels.

- Hazardous waste burners across all process types dispose of a larger percentage of the gross CKD they generated as compared with non-hazardous waste burners. This result is consistent with the earlier observation with respect to recycling rates. Although no pattern emerged in the case of CKD sold, the percentages of CKD sold are generally low relative to CKD recycled and it is not surprising that the percentages of CKD sold did not significantly influence the outcome with respect to CKD wasted.

- Across the entire sample of 144 kilns and 77 plants, close to 65 percent of the gross CKD generated was internally recycled in 1990, and of the more than 35 percent comprising net CKD, approximately 82 percent was disposed and 18 percent was sold or given away.

The data contained in Exhibits 3-12 and 3-13 show that recycling rates do differ between process type and between fuel type. Although some CKD must be removed from the system to reduce alkali levels, it is possible that some facility operators recycle none of their CKD to reduce the complexities of clinker quality control. Any explanation for the greatly reduced recycling rates observed among wet kilns compared to dry kilns is probably based on economics, because full recycling (in some cases with treatment of CKD) could probably be achieved for any process if cost were not an issue. Possible recycling technologies are discussed in greater depth in Chapters 8 and 9. Nonetheless, three potential explanations are presented here for the finding that wet kilns recycle less CKD than dry kilns.

One reason that wet kilns recycle less CKD than dry kilns is apparently because, relative to the number of kilns in each process type, a larger proportion of wet kilns burn hazardous waste than dry kilns. As discussed above, decreased CKD recycling rates are associated with hazardous waste burning. According to the 1991 PCA Survey, 13 of 43 wet kilns (30 percent) burn hazardous waste while only 19 of 82 dry kilns (23 percent) burn hazardous waste. This practice is probably driven by economics. Because of the higher water content of the raw feed, which must be dried, wet process kilns are inherently less energy efficient than dry kilns.[17] To supplement the large energy demands required by wet process kilns in a cost-competitive manner, wet kiln operators have presumably looked to hazardous waste as an inexpensive source of fuel with high heat content.[18]

---

[17] Beers, A., 1987, *op. cit.*

[18] Gossman, D., 1992. The Reuse of Petroleum and Petrochemical Waste in Cement Kilns. Environmental Progress (Vol. 11, No. 1). February. p. 5.

Another possible explanation is the fact that wet kilns generally represent older systems than dry kilns, and that perhaps these kilns also represent a sector of the cement industry where any system modifications are not projected to be cost-effective. Hence, operators of wet kilns may be wasting a greater proportion of dust to simplify their process operations. Rather than installing recycling process equipment and constantly monitoring CKD constituents to determine appropriate recycling rates, such operators may find it easier and more economical to waste the dust.

As mentioned previously, observed recycling differences between kiln systems may owe to plant-specific differences in raw feed inputs, where the raw feed inputs may typically be higher in alkalies for wet kilns than for kilns not burning hazardous waste, or for dry process kilns. Due to a general paucity of raw feed data, the only relevant comparison that can readily be made to explore this possibility is to compare the geographic distribution of kilns based on recycling rate, which can indicate regional differences in the geology and chemistry of raw materials. If regional trends were noted, EPA could infer an influence from raw feed inputs. In reviewing the geographic distribution of recycling rates (through mapping), however, EPA noted no recycling patterns by region for process type or for fuel type.

The most plausible explanation for decreased recycling rates among kilns burning hazardous waste is that chloride, alkali, and/or sulfate levels in some hazardous wastes may significantly increase the loading rates of these contaminants in the dust. To maintain acceptable levels of chloride, alkali, and sulfate in the system, more CKD may need to be removed from the system than if the kiln had not been burning hazardous waste as fuel. Some facility operators report that the burning of hazardous waste with high chlorine levels can induce the precipitation of alkali chlorides in the kiln. Bleeding of CKD then removes these alkali chlorides from the system.[19] This idea is supported in the co-firing study cited above, where net CKD in one kiln was increased from 91 metric tons per month to 1,800 metric tons per month to control chloride levels.[20]

3.2 CKD GROSS CHARACTERISTICS

CKD is comprised of thermally unchanged raw materials, dehydrated clay, decarbonated (calcined) limestone, ash from fuel, and newly formed minerals corresponding to all stages of processing up through the formation of the clinker.[21,22] An unusual feature of CKD is that, unlike typical process wastes that are substantially different than the product, CKD is essentially cement clinker that does not quite meet commercial specifications.

3.2.1 Physical Characteristics

Although the relative constituent concentrations in CKD can vary significantly, CKD has certain physical characteristics that are relatively consistent. When stored fresh, CKD is a fine, dry, alkaline dust that readily absorbs water. When managed on site in a waste pile, CKD can

---

[19] *Ibid.*

[20] Engineering-Science, 1987, *op. cit.*, p. 4-18.

[21] Kohlhaas, B., *et al.*, 1983, *op. cit.*, pp. 624.

[22] Engineering-Science, 1987, *op. cit.*, pp. 3-4, 3-12, 4-18.

retain these characteristics within the pile while developing an externally weathered crust, due to absorption of moisture and subsequent cementation of dust particles on the surface of the pile.

Exhibit 3-14 provides particle size distributions for CKD generated by various process types. It demonstrates that the size distribution of CKD can vary significantly, with diameters ranging from near zero to greater than 50 μm. (The lack of statistical information from the sources of these figures necessitates that only qualitative conclusions about particle size distributions be drawn.) The data show that from 15 to 90 percent of CKD has a diameter below 10 μm, within the respirable range for humans. Moreover, Exhibit 3-14 suggests that at least 55 percent of CKD measures less than 30 μm in diameter, while a nearly uniform 82 percent falls below 50 μm. Although the data contained in Exhibit 3-14 are limited in scope and therefore inconclusive, it appears that dry precalciner kilns generate larger CKD particles than wet kilns or dry long kilns, while dry long kilns may produce the smallest CKD particles. Dry long kilns appear to generate nearly all (90 percent) of their CKD in the respirable range, while only 17 percent of CKD from dry kilns with precalciners is in this size range. Median sizes also suggest that dry, long kilns may have the smallest CKD particles, at 3 μm, followed by wet kilns at 9.3 μm, and finally dry kilns with precalciners at 22.2 μm.

Exhibit 3-14

Particle Size Distribution of CKD by Process Type

	SOURCE 1[a]	SOURCE 2[b]		
Particle Size (μm)	**Unspecified Process Type (weight percent)**	**Wet Kilns (weight percent)**	**Long Dry Kilns (weight percent)**	**Dry Kilns with Precalciner (weight percent)**
0-5	5	26	45	6
5-10	10	19	45	11
10-20	30	20	5	15
20-30	17	9	1	23
30-40	13	8	1	18
40-50	7	1	0	9
>50	18	17	3	18
Median Particle Size	**No Data**	**9.3**	**3.0**	**22.2**

[a] Kohlhaas, *et al.*, 1983, *op. cit.*, p. 640. The number of samples used to develop data was not specified.

[b] Todres, H., A. Mishulovich, and J. Ahmed, 1992. CKD Management: Permeability. Research and Development Bulletin RD103T, Portland Cement Association, Skokie, Illinois, p. 2. It appears that one sample per process type was analyzed to develop the data presented above.

Exhibit 3-15 presents particle size data submitted by Midwest Portland Cement Company in Zanesville, Ohio, in response to a request for data by EPA under Section 3007 of RCRA. This facility operates two wet process kilns. These data show that "peaks" in the particle size distribution occur at diameters of 22 μm (approximately 13 percent of total dust volume) and 3.9 μm (about 11 percent of the total dust volume). Thirty percent or more of the CKD examined in this analysis had an aerodynamic diameter of less than 10 μm, which is the respirable range for humans.

Coplay (ESSROC Materials) Cement Company of Frederick, Maryland, in response to the same RCRA Section 3007 request, submitted particle-size screen analysis data on "typical stack dust."[23] These data were similar to those submitted by Midwest Portland, showing 99.9 percent of dust passing a screen size of approximately 185 μm, 99.4 percent passing 130 μm, 88.8 passing 110 μm, and 72.4 percent passing 72 μm. (These screen sizes were converted from screen sizes of #20 mesh, #50 mesh, #100 mesh, and #200 mesh, respectively.)

Exhibit 3-15

Particle Size Distribution of CKD
Midwest Portland Cement Company, Zanesville, Ohio[a]

Particle Size (μm)	Percent Volume Passing	Cumulative Percent Volume Passing
176.0	1.6	100.0
125.0	7.0	98.4
88.0	9.3	91.4
62.0	9.1	82.1
44.0	8.0	73.0
31.0	8.5	64.9
22.0	12.8	56.5
16.0	5.7	43.7
11.0	9.6	38.0
7.8	6.7	28.4
5.5	7.4	21.7
3.9	11.4	14.3
2.8	2.5	2.9
1.9	0.4	0.4

[23] ESSROC Materials, Inc., 1992. Particle size distribution of "typical stack dust," February 14, 1992. Submitted on November 3, 1992 in response to RCRA Section 3007 request for information by U.S. EPA, August 18, 1992.

1.4	0.0	0.0

[a] Midwest Portland Cement Company, 1992. Particle size distribution of kiln dust laboratory sample, February 14, 1992. Submitted on September 2, 1992 in response to RCRA Section 3007 request for information by U.S. EPA, August 18, 1992.

The fine-grained nature of CKD makes it easily transportable in air, a factor that necessitates the use of effective air pollution control devices to remove this material from kiln exhaust gases. The smallest particles may not be fully captured by air pollution control devices, and may instead be released into the atmosphere. Particles smaller than 75 μm can be suspended in the air and tend to follow air currents. At 30 μm or less, these particles can travel long distances before settling.

The ability of CKD to absorb water stems from its chemically dehydrated nature, which results from the thermal treatment it receives in the kiln system. The action of absorbing water (rehydrating) releases a significant amount of heat from non-weathered dust, a phenomenon that can be exploited in beneficially using CKD. For example, CKD can be used to dewater municipal sewage sludge, while the heat of hydration can be used to sterilize the blended material. Such uses are discussed further at the end of this chapter and in more detail in Chapter 8.

Hydraulic conductivity represents a physical characteristic of particular interest for CKD managed in piles or beneficially used in applications such as bulk fill. If, for example, CKD were to conduct water fairly well, it could be used as a bulk fill without concern about ponding and structurally unstable saturated material. Disposal of CKD in a waste management unit that readily conducted water might, however, require controls to prevent release of leachate to the environment.

EPA's data on CKD hydraulic conductivity are limited to two sources. Source 1 is a report on CKD pile characteristics by General Portland (now National Cement), in Los Robles, California.[24] The report presents test results comparing fresh CKD to CKD that had been placed in a waste pile. In a laboratory experiment, the two dust types were compacted to varying degrees under an empirically determined optimum compacting moisture content, and their hydraulic conductivities were measured. Source 2 is a conductivity study conducted by researchers for PCA.[25] In this study, investigators compared the conductivity of CKD from three process types: wet, dry long, and dry with precalciner. Exhibit 3-16 summarizes the results of these studies.

As shown in Exhibit 3-16, the hydraulic conductivity of CKD is inherently low, at least compared to typical soil types. Compacted CKD conductivities are as low as 1×10^{-10} cm/sec, an extremely low value compared to the typical conductivity of a compacted clay landfill liner, which is about 1×10^{-7} cm/sec. The highest conductivity was 3×10^{-3} cm/sec, which indicates moderate permeability. Making solely qualitative comparisons because additional data were not provided,

[24] Chadbourne, J. and E. Bouse, General Portland, 1985. Los Robles Cement Plant CKD Waste Classification Report. August. p. 5.

[25] Todres, H., A. Mishulovich, and J. Ahmed, 1992. *CKD Management: Permeability*. Research and Development Bulletin RD103T, Portland Cement Association, Skokie, Illinois, p.7.

no clear pattern was observed between process types from Source 2. For example, although dust from the wet process exhibited lower permeabilities at medium and high compactions, this same dust had the highest conductivity under light compaction. For Source 1, the waste pile dust appeared to exhibit a lower conductivity than the fresh dust. The authors of Source 1 attributed the lower conductivity of the waste pile dust to its "setting" during prolonged weathering. Although all or most of the cemented aggregations that might have formed during weathering would most likely be broken down during compaction in the test, the disaggregated particles in the managed dust appear to more readily bind and reduce conductive pore space than in the generated dust. The data from this test suggest that, although CKD hydraulic conductivity appears to be inherently low, this property appears to decrease even further with time, especially when CKD is exposed to atmospheric influences such as humidity and rain.

Exhibit 3-16

Hydraulic Conductivity of Freshly Generated and Managed CKD

SOURCE 1[a]			SOURCE 2[b]			
	Hydraulic Conductivity (cm/sec)[c]			Hydraulic Conductivity (cm/sec)		
Percent of Maximum Compacted Density	Waste Pile	Fresh	Degree of Compaction[d]	Wet Process	Dry Process	Dry Process with Precalciner
85	6.5×10^{-6}	3.5×10^{-5}	Light	1.5×10^{-3}	3.0×10^{-3}	5.1×10^{-4}
90	5.5×10^{-6}	1.3×10^{-5}	Medium	7.6×10^{-6}	7.0×10^{-6}	2.1×10^{-5}
95	1.9×10^{-6}	4.7×10^{-6}	Heavy	1×10^{-10}	4.9×10^{-8}	1.6×10^{-6}

[a] Chadbourne, J., and E. Bouse, 1985, *op. cit.*, p. 5.

[b] Todres, H., *et al.*, 1992, *op. cit.*, p. 7.

[c] Relative hydraulic conductivities between soil/rock types (Todres *et al.*, 1992, p. 5):

Relative Permeability	Hydraulic Conductivity	Typical Soil/Rock Type
High	$>10^{-1}$ (cm/sec)	Coarse gravel
Medium	10^{-1} to 10^{-3} (cm/sec)	Sand, find sand
Low	10^{-3} to 10^{-5} (cm/sec)	Silty sand, dirty sand
Very Low	10^{-5} to 10^{-7} (cm/sec)	Silt, fine sandstone
Near Impervious	$<10^{-7}$ (cm/sec)	Clay

[d] Degrees of compaction were designed to simulate the following treatments: Light Compaction = "as dumped", with little or no compactive effort; Medium Compaction (Standard Proctor) = Compaction in the field at appropriate moisture content, using moderate equipment on thin lifts; Heavy Compaction (Modified Proctor) = Compaction in the field at appropriate moisture content, using heavy equipment on controlled lift thicknesses.

3.2.2 Bulk Chemical Characteristics

An analysis of the chemical composition of CKD can be conducted on two levels: 1) the major, or "bulk" constituents of the material, and 2) minor, or "trace" constituents that may comprise very small percentages of total CKD mass but nonetheless be important from an operational and/or environmental standpoint. Bulk constituents are defined herein as those that exceed 0.05 percent by weight in the CKD. Bulk constituents are primarily those found in clinker, though they also may be present at levels in CKD that are unacceptable in the cement product. Although the types of bulk constituents found in CKD do not vary significantly among samples from different plants and over time, the relative proportions of these constituents vary widely. Trace CKD characteristics are presented in Section 3.3 and clinker characteristics are presented in Section 3.5.

Exhibit 3-17 summarizes some of the data on bulk constituents available for comparison, which suggest that significant CKD variability can occur even between kilns with relatively minor process differences. The first two columns of data show ranges for data provided by respondents to the 1991 PCA Survey, divided between all wet kilns and all dry kilns for which there are data.

The third and fourth columns contain analytical data representing two types of dry preheater kilns: dry with cyclone preheater and dry with grate preheater.

Although wide concentration ranges exist for most constituents, Exhibit 3-17 generally shows that the primary bulk constituents in CKD are silicates, calcium oxide, carbonates (expressed as loss of CO_2 and H_2O on ignition), potassium oxide, sulfates, chlorides, various metal oxides, and sodium oxide. The information presented in Exhibit 3-17 suggests that few inferences can be drawn from these data regarding process influences on CKD chemical composition. That is, variability in CKD composition appears to be without trend among the process types, based upon this limited sample. The chloride content of the wet kiln CKD may exceed that of the dry kiln CKD by a factor of about two. Exhibit 3-17 does serve to demonstrate that factors other than process type (e.g., fuels, feed, product specifications) may be influencing CKD chemical characteristics, because of the high degree of constituent concentration variability within each process type.

As an additional measure of chemical characteristics, Exhibit 3-17 shows that CKD is inherently alkaline. This characteristic is a clear function of the large quantity of CaO and other alkaline compounds, such as K_2O, NaOH, Na_2CO_3, and Na_2SO_4, that comprise CKD. Again, however, conclusions based on process differences are tenuous using the available data. In general, the pH of CKD leachates (using standard EPA leachate procedures) falls between 11 and 13.[26] The significance of these leachate levels with respect to environmental risk is discussed in detail in Chapter 6.

3.3 CKD TRACE CHARACTERISTICS

Trace constituents are generally found in concentrations of less than 0.05 percent by weight and are typically expressed as milligrams per kilogram (mg/Kg), or parts per million. These constituents include certain organic chemicals, metals such as cadmium, lead, and selenium, and radionuclides. Trace constituents are important to an analysis of the chemical characteristics of CKD because some of these elements and compounds are toxic or otherwise harmful at low concentrations, and as discussed below in Chapter 5, CKD has been managed in a way that may release these trace constituents to the environment. Furthermore, the use of hazardous waste and other wastes (e.g., slag) and raw materials as fuel and raw material inputs in cement kilns has raised concerns regarding the concentrations of certain heavy metals in CKD generated by plants that use these alternative materials.

3.3.1 EPA Sampling Program

With the exception of metals and general chemistry data,[27] the Agency found that existing chemical characterization data on CKD was insufficient for the purpose of determining what organic and inorganic constituents may be present in CKD. Therefore, the Agency decided to undertake a sampling program in order to characterize CKD more fully for this Report to

---

[26] Although some leachate pH values from dry kiln-derived CKD have been measured below 9.0, the Agency does not believe that kiln type exerts a significant influence on the alkalinity of CKD, and believes that the validity of some reported data is questionable. For example, results from EPA's 1992 field sampling and analysis yielded several as generated and as managed CKD samples with reported laboratory leachate values below pH 9.0. The Agency believes these pH levels may not be representative of typical CKD leachate characteristics.

[27] General chemistry analytes are also referred to as "major ions" and "wet chemistry" in this document. This class of analytes includes chlorides, sulfates, sulfides, fluorides, cyanide, and total organic carbon.

Congress. During the spring of 1992 and spring of 1993, EPA visited a total of 20 cement manufacturing facilities for the

Exhibit 3-17

Typical CKD Bulk Constituents

Constituent	Concentration Ranges (weight percent)			
	Long Dry Kilns, Dry Kilns with Preheaters, and/or Calciners[a]	Wet Kilns[b]	Rotary Kiln with Cyclone Preheater[c]	Rotary Kiln with Grate Preheater[c]
SiO_2	4.3-10.1	4.1-7.7	7-11	2-19
Al_2O_3	1.0-3.3	1.3-3.3	3-6[d]	0.5-8[d]
TiO_2	0.07-0.2	0.08-0.2		
Fe_2O3	0.7-2.3	0.8-2.0	1-3[d]	0.5-4[d]
Mn_2O_3	0.01-0.2	0.02-0.04		
CaO	11.0-45.0	15.9-38.0	41-51	6-26
MgO	0.4-2.0	0.4-1.9	0.5-2	0-2
SO_3	0.1-7.7	0.1-6.0	0.5-4	7-41
K_2O	0.2-9.7	0.2-12.1	0.5-4	14-40
Cl^-	0.08-2.7	4.2-6.3	0-0.3	0.9-4.5
Na_2O	0.07-1.2	0.1-4.1	0-0.5	0.5-3
LOI (CO_2+H_2O)	Not Available	22-25[e]	29-38	4-24
pH	6.11 - 12.83[f] (s.u.)	11.64-12.98[g] (s.u.)	No Data	No Data

[a] Based on 28 tests from 12 facilities responding to 1991 PCA Survey.

[b] Based on 19 tests from 9 facilities responding to 1991 PCA Survey.

[c] Kohlhaas, B, *et al.*, 1983, *op. cit.*, p. 623. No information was provided on the size of the population samples or operational characteristics.

[d] The responses for the corresponding constituents are aggregated.

[e] Range based on (1) a Dragon Products Company memorandum (December 6, 1991) from Steve Wallace to John Bangeman regarding typical analyses of several Dragon Products materials; and (2) a typical analysis of Stable Sorb at Keystone Cement Company (February 18, 1991).

[f] Based on EPA sampling data for TCLP and SPLP leachate tests on as generated CKD from seven facilities. These leachate samples are obtained using an acid solution, so that actual CKD pH values may be higher than indicated here.

[g] Based on EPA sampling data for TCLP and SPLP tests on as generated CKD from eight facilities. These leachate samples are obtained using an acid solution, so that actual CKD pH values may be higher than indicated here.

primary purpose of obtaining samples of cement kiln dust to determine its composition.[28] Fifteen of the facilities were selected at random from the population of U.S. facilities. The other five were selected for individual characteristics such as kiln type (e.g., wet or dry), use of hazardous waste as kiln fuel, and geographic location, so that these factors would be represented in the final data set. Then, the Agency collected samples of "as generated" and "as managed" CKD from each of the visited facilities and subjected them to chemical analysis.[29]

The Agency selected the following classes of analytes to characterize cement kiln dust: volatile organic compounds, semi-volatile organic compounds, dioxins, furans, pesticides, polychlorinated biphenyls (PCB), metals, radionuclides, and general chemistry. The individual target compounds that were determined are identified in the respective sampling project plans. The project plans are available in the EPA docket for this Report to Congress.[30] The organic analytes were selected primarily from EPA's list of RCRA Hazardous Constituents, which is presented in Appendix VIII of 40 CFR Part 261.

Because CKD is typically managed in open piles outdoors, the Agency believed it necessary to also examine the potential for constituents to leach from CKD into the surrounding environment. Therefore, the Agency also prepared TCLP and SPLP leachates from subsamples of selected CKD samples and subjected them to analysis for certain of the analytes identified above, including metals, dioxins, furans, pesticides, radionuclides, and general chemistry.[31] TCLP is a laboratory method that simulates the generation and release of leachate from an improperly disposed solid waste (i.e., a mis-management scenario). In certain cases, EPA uses an analogous method, SPLP, to simulate land disposal of inorganic wastes in monofills, a situation that commonly occurs at domestic cement plants.[32] Under both leaching procedures, the analyte concentrations that are measured in the leached extract are compared with a set of EPA regulatory standards, which are based on 100 times the respective EPA primary drinking water standards (i.e., toxicity characteristic).

3.3.2 Total Concentrations

The total concentrations (i.e., mass of a particular constituent per mass of CKD) of trace constituents found in CKD are presented below by the following classes: metals, dioxins and

---

[28] The EPA sampling efforts conducted in 1992 and 1993 are also referred to as the Phase I and Phase II sampling efforts, respectively. Also, one of the 20 facilities was re-visited and sampled a second time for analysis verification purposes. The re-visit is not included in the facility counts presented in this document.

[29] As generated refers to newly generated CKD that was obtained from the air pollution control device at the kiln. As managed refers to CKD that was obtained from the facilities' on-site CKD storage or disposal piles. The as-managed CKD samples were obtained from storage or disposal pile areas containing dust that had typically been in storage or disposal status for up to six months.

[30] The sampling project plans are entitled *Cement Kiln Industry Sampling and Analysis and Quality Assurance Project Plan*, dated March 1992, and *Cement Kiln Industry Sampling and Analysis and Quality Assurance Project Plan - Phase 2*, dated May 1993.

[31] TCLP stands for Toxicity Characteristic Leaching Procedure. SPLP stands for Synthetic Precipitation Leaching Procedure. The protocols for these procedures are found in SW-846 analytical methods numbered 1311 and 1312, respectively.

[32] Only the TCLP test and its results have regulatory significance; though the SPLP is an official EPA method, it is not used for identifying hazardous wastes under 40 CFR Part 261.

furans, general chemistry, volatile organic compounds, semi-volatile organic compounds, pesticides, polychlorinated biphenyls (PCB), and radionuclides.

Metals

EPA collected as generated CKD samples from the 15 facilities that were sampled by EPA in 1992 and as managed CKD samples from 13 of these facilities.[33] EPA analyzed these samples for the following metals: antimony, arsenic, barium, beryllium, cadmium, chromium, lead, mercury, nickel, selenium, silver, thallium, and vanadium. With a few exceptions, all of the metals were detected in all of the as generated and as managed CKD samples. As discussed below, these data were used to supplement the metals data made available to the Agency by the cement manufacturing industry and in literature published by the U.S. Bureau of Mines.

Upon conducting several assessments of the types and concentrations of trace metal constituents in as generated and as managed CKD, the Agency has concluded that a number of trace metal constituents occur in CKD at highly variable concentrations. Exhibits 3-18 and 3-19 present basic univariate statistics (number of samples, number of non-detected values, and mean, minimum, maximum, and median concentrations) describing the occurrence of several trace metal constituents in as generated and as managed CKD, respectively. These data were generated by separate studies conducted by the Portland Cement Association, the U.S. Bureau of Mines, and EPA in its 1992 sampling and analysis effort.

Data on the total constituent concentrations of trace metals found in both the as generated and as managed CKD show that the eight Toxicity Characteristic (TC) metals listed in 40 CFR §261.24 and nine other metals are consistently present (although at variable concentrations) in CKD. In general, the predominant trace metals include antimony, barium, lead, manganese, strontium, thallium, and zinc, and the minor trace metals include beryllium, copper, hexavalent chromium, mercury, nickel, silver, and thallium. A comparison of the data characterizing the as generated and as managed CKD suggests that the total constituent concentrations of trace metals found in the as generated CKD are greater by as much as an order of magnitude; however, the apparent differences may be attributable to changes in composition of materials charged to the kiln over time.

Intuitively, one would expect a mineral production waste such as CKD to contain the same types of constituents naturally present in the parent material. The concentration of the constituents found in such a waste, however, is likely dependent on whether the operator utilized a concentrating or extracting processing procedure. To help assess whether CKD contains elevated levels of any specific trace metal, the Agency compared the highest of the average concentrations of each trace metal observed in the five studies presented in Exhibit 3-18 for the as generated CKD and the two studies presented in Exhibit 3-19 for the as managed CKD to the range of trace metals commonly found in native soils. As shown in Exhibit 3-20, the levels of several of the trace metals found in CKD are within the range commonly found in native soils. Interestingly, these data suggest that CKD contains seven trace metals (antimony, cadmium, lead,

---

[33] One additional set of metals data was generated too late for consideration during the development of this report.
This data set includes EPA's analysis for the 14 metals in as managed CKD from the six facilities that were sampled by EPA in 1993 (Phase 2). These data have been included in the EPA RCRA docket for this report for access by interested parties, and they will be considered by the Agency during its formulation of the final regulatory determination for CKD.

mercury, selenium, silver, and zinc) at levels outside the range commonly found in native soils. These data also show that CKD may have arsenic and strontium at levels that are within the range of naturally occurring soils but that exceed the average

Exhibit 3-18
Trace Metal Concentrations in As Generated CKD
(parts per million)

Data Source	Analyte	Number of Samples	Number of Non-Detected Values	Mean	Minimum	Maximum	Median
EPA SAMPLING[a]	Antimony	17	1	7.7	1.77	27.2	6.2
	Arsenic	17	0	6.9	2.1	20.3	4.9
	Barium	17	0	172.1	11.0	779.0	103.0
	Beryllium	17	1	0.71	0.158	1.6	0.59
	Cadmium	17	0	13.2	0.89	80.7	4.6
	Chromium	17	0	26.6	11.5	81.7	18.1
	Lead	17	0	388.4	5.1	1,490.0	287.0
	Mercury	17	3	1.0	0.005	14.4	0.11
	Nickel	17	0	19.0	6.9	39.0	15.9
	Selenium	17	0	17.5	2.5	109.0	11.3
	Silver	17	0	6.9	1.1	22.6	3.7
	Thallium	17	0	17.1	0.99	108.0	3.5
	Vanadium	17	0	41.6	6.6	204.0	25.9
PCA SURVEY[b]	Antimony	1	1	0.53	0.53	0.53	0.53
	Arsenic	3	0	34.3	3.7	53.0	46.2
	Barium	1	0	150.0	150.0	150.0	150.0
	Beryllium	3	3	0.517	0.509	0.523	0.521
	Cadmium	3	0	8.05	3.0	12.1	9.05
	Chromium	3	0	39.0	32.7	49.0	35.2
	Chromium(VI)	2	0	7.82	7.05	8.59	7.82
	Copper	2	0	28.4	28.2	28.7	28.4
	Lead	3	0	210.3	151.0	270.0	210.0
	Manganese	5	0	211.2	200.0	222.0	212.0
	Mercury	3	3	0.104	0.100	0.107	0.106
	Nickel	3	0	18.3	10.0	23.8	21.1
	Selenium	1	0	6.5	6.5	6.5	6.5
	Silver	1	1	0.504	0.504	0.504	0.504
	Thallium	1	1	4.616	4.616	4.616	4.616
	Vanadium	3	0	33.5	23.0	39.2	38.3
	Zinc	3	0	104.3	86.0	116.0	111.0
PCA REPORT 1[c]	Antimony	6	0	112.8	37.8	161.0	142.5
	Arsenic	6	2	20.4	3.726	80.7	8.86
	Barium	6	0	183.5	101.0	323.0	141.5
	Beryllium	6	0	3.88	2.86	4.64	3.81
	Cadmium	6	0	18.6	4.73	44.0	13.5
	Chromium	6	0	35.9	18.1	58.5	36.2
	Lead	6	0	283.7	53.2	819.0	171.0
	Mercury	6	3	0.062	0.003	0.305	0.015
	Silver	6	0	9.17	5.71	12.7	9.33
	Thallium	6	0	88.0	68.6	146.0	79.0

Exhibit 3-18 (continued)
Trace Metal Concentrations in As Generated CKD
(parts per million)

Data Source	Analyte	Number of Samples	Number of Non-Detected Values	Mean	Minimum	Maximum	Median
PCA REPORT 2[d]	Antimony	95	86	0.395	0.083	3.43	0.21
	Arsenic	95	45	13.0	1.323	159.0	9.07
	Barium	95	0	185.8	35.0	1,402.0	133.0
	Beryllium	95	1	0.645	0.032	3.54	0.539
	Cadmium	95	14	8.83	0.008	59.6	3.27
	Chromium	95	0	40.8	8.25	293.0	29.1
	Lead	95	0	434.5	33.5	7,390.0	188.0
	Lithium	0	0	0	0	0	0
	Mercury	95	30	17.3	1.0	60.0	14.0
	Nickel	95	27	0.49	0.001	25.5	0.045
	Selenium	94	40	18.3	0.227	307.0	7.23
	Silver	95	3	10.3	3.549	40.7	9.28
	Thallium	95	6	40.6	0.109	776.0	8.96
BOM IC 8885[e]	Antimony	113	71	3.3	0.701	70.0	0.83
	Arsenic	113	0	23.8	1.3	518.0	10.0
	Cadmium	113	17	20.0	0.687	352.0	7.6
	Chromium	113	0	41.6	11.0	172.0	35.0
	Copper	113	0	30.1	7.0	206.0	24.0
	Lead	113	5	252.9	11.335	1,750.0	148.0
	Lithium	113	15	18.0	1.754	76.0	16.0
	Manganese	113	0	385.6	63.0	2,410.0	284.0
	Nickel	113	51	19.3	5.421	91.0	16.0
	Silver	113	54	5.1	1.291	17.0	4.7
	Strontium	113	0	669.0	100.0	8,800.0	400.0
	Zinc	113	0	462.0	32.0	8,660.0	167.0

[a] Data from EPA's 1992 sampling effort.

[b] Data from the 1991 PCA Survey of U.S. cement plants.

[c] Portland Cement Association, 1992. *An Analysis of Selected Trace Metals in Cement and Kiln Dust (Draft).* PCA Report SP109T, Skokie, IL.

[d] Portland Cement Association, 1992. *An Analysis of Selected Trace Metals in Cement and Kiln Dust.* PCA Report SP109T, Skokie, IL, 56 pages.

[e] Haynes, B., and G. Kramer, 1982. *Characterization of U.S. CKD.* Bureau of Mines Information Circular (IC) 8885, U.S. Department of Interior. Bureau of Mines. Office of Assistant Director. Minerals and Materials Research, Washington, D.C.

Exhibit 3-19

Trace Metal Concentrations in As Managed CKD (parts per million)

Data Source	Analyte	Number of Samples	Number of Non-Detected Values	Mean	Minimum	Maximum	Median
EPA SAMPLING[a]	Antimony	14	2	6.5	1.581	10.9	6.6
	Arsenic	14	0	7.7	2.1	19.8	6.4
	Barium	14	0	144.5	39.8	360.0	136.5
	Beryllium	14	2	0.68	0.175	1.5	.52
	Cadmium	14	0	11.8	0.62	27.4	10.1
	Chromium	14	0	35.0	9.6	110.0	21.4
	Lead	14	0	359.1	40.6	863.0	380.5
	Mercury	14	3	0.121	0.009	0.830	0.075
	Nickel	14	0	19.4	6.3	54.7	14.9
	Selenium	14	0	10.7	1.4	43.9	7.7
	Silver	14	2	4.2	0.348	17.2	1.95
	Thallium	14	0	4.1	1.1	14.6	2.3
	Vanadium	14	0	33.3	7.6	120.0	19.6
PCA SURVEY[b]	Antimony	37	13	27.7	0.099	360.0	7.2
	Arsenic	44	11	16.0	0.514	82.1	9.7
	Barium	42	0	235.2	2.0	635.0	207.0
	Beryllium	34	5	1.1	0.141	6.7	0.69
	Cadmium	44	0	24.3	0.41	85.7	17.3
	Chromium	44	0	40.1	3.3	132.0	34.8
	Chromium(VI)	7	1	0.11	0.02	0.23	0.13
	Copper	1	0	7.15	7.15	7.15	7.15
	Lead	44	0	857.9	3.12	4,230.0	441.0
	Manganese	2	0	165.9	123.0	208.8	165.9
	Mercury	42	24	1.0	0.002	4.7	1.1
	Nickel	11	0	22.4	3.6	46.3	16.0
	Selenium	34	9	15.0	0.518	103.0	7.5
	Silver	41	2	7.4	0.187	57.9	3.0
	Strontium	1	0	422.8	422.8	422.8	422.8
	Thallium	36	18	9.7	2.0	68.6	5.7
	Vanadium	1	0	30.0	30.0	30.0	30.0
	Zinc	2	0	128.6	37.2	220.0	128.6

[a] Data from EPA's 1992 sampling effort.

[b] Data from the 1991 PCA Survey of U.S. cement plants.

Exhibit 3-20

Trace Elements Commonly Found in Native Soils (mg/Kg)

Trace Elements	Common Ranges	Average Concentrations	As Generated (Highest Average)*	As Managed (Highest Average)*
Antimony	2 - 10	NA	112.8	27.7
Arsenic	1 - 50	5	34.3	16
Barium	100 - 3,000	430	185.8	235.2
Beryllium	0.1 - 40	6	3.8	1.1
Cadmium	0.01 - 0.7	0.06	20	24.3
Chromium	1 - 1,000	100	41.6	40.1
Copper	2 - 100	30	30.1	7.1
Lead	2 - 200	10	434.5	857.8
Manganese	20 - 3,000	600	385.6	165.9
Mercury	0.01 - 0.3	0.03	17.3	1
Nickel	5 - 500	40	19.3	22.4
Selenium	0.1 - 2	0.3	18.3	15
Silver	0.01 - 5	0.05	10.3	7.4
Thallium	NA	NA	40.6	9.7
Vanadium	20 - 500	100	41.6	33.3
Zinc	10 - 300	50	462	128.6
Strontium	50 - 1,000	200	669	422.8

Source: Hazardous Waste Land Treatment, Table 6.46 - Trace Elements of Soils, U.S. Environmental Protection Agency, Cincinnati, Ohio, PB89-179014, April 1983, page 273.

* EPA used the highest of the average concentrations of each trace metal observed in the five studies presented in Exhibit 3-18 for the as generated CKD and the two studies presented in Exhibit 3-19 for the as managed CKD.

native soil concentration by a factor of two or more. CKD, therefore, could be a potential contributor of these metals at higher than natural levels to the environment. For some metals (e.g., arsenic), the high end of the naturally occurring range of concentrations in native soils may present risk to human health and the environment. The potential risks to human health and the environment posed by these metals are identified and discussed in Chapters 5 and 6.

Dioxins and Furans

EPA analyzed dioxins and furans in as generated and as managed CKD samples from 11 facilities. A number of the dioxin and furan target compounds were detected in both as generated and as managed CKD. Because these compounds were detected rather consistently in CKD, the Agency continued with analysis of the analytical data. Analyses were performed to

non-hazardous waste burning facilities. These data show that dioxins and dibenzofurans (HpCDD, HpCDF, HxCDD, HxCDF, OCDD, OCDF, PeCDD, PeCDF, TCDD (including 2,3,7,8-TCDD) and TCDF also

determine whether the data from the 1992 EPA sampling could be pooled with the data from the 1992 sampling, and to determine whether there are relationships between dioxin and furan levels in CKD and two important operating factors: (1) use of hazardous waste as a fuel; and (2) use of wet process kilns versus dry process kilns.

One facility that was sampled during the Phase I sampling effort, River Cement Company, was re-sampled as part of the Phase II effort. This was done in part to conduct confirmatory analyses on the levels of dioxins that were reported from the Phase I effort at this facility. The CKD from this facility exhibited, by far, the highest levels of dioxins observed during the EPA sampling program. The results of the Phase II sampling did confirm the presence of dioxins in CKD at this facility, although the Phase II results showed dioxin levels generally three to four times lower than those measured during the Phase I sampling effort. As such, the Agency considers this facility to be non-typical of the industry in this respect. The Agency believes that the production of dioxins and furans in processes such as these may be heavily influenced by the incinerator or kiln exhaust gas temperatures, specifically at the inlet to the air pollution control devices (APCD) (e.g., baghouses, electrostatic precipitators). The levels of these organic constituents of CKD may be controllable through relatively minor process modifications to reduce exhaust gas or APCD inlet temperatures.

Exhibits 3-21 through 3-24 provide dioxins and dibenzofurans data resulting from sampling by EPA of as generated and as managed dust at six cement plants in 1993. It is worthy of note that dioxins and dibenzofurans were found in CKD samples collected from both facilities burning hazardous waste fuels and those not burning hazardous waste fuels.

Exhibit 3-21 presents total constituent concentration data for dioxins and dibenzofurans obtained from analyses of as generated CKD produced by both hazardous waste burning and non-hazardous waste burning facilities. These data indicate that dioxins and dibenzofurans (HpCDD, HpCDF, HxCDD, HxCDF, OCDD, OCDF, PeCDD, PeCDF, TCDD (including 2,3,7,8-TCDD) and TCDF are present at very low concentrations in CKD generated by both hazardous and non-hazardous waste fuel burning facilities. Most of the homologs, however, were detected at concentrations below 100 ppt, while several samples had homolog concentrations approaching one ppb. Only one homolog was detected at a concentration exceeding one ppb (total HxCDD at 1.5 ppb). These results correspond with the results obtained from EPA's Phase I analyses of dioxins and dibenzofurans, with the exception of one of seven samples where total HpCDD, HxCDD, HxCDF, PeCDD, PeCDF, TCDD, and TCDF were all detected at concentrations exceeding one ppb.

DIOXINS AND DIBENZOFURANS

- Tetrachlorinated dibenzo-p-dioxins (TCDD)
- Tetrachlorinated dibenzofurans (TCDF)
- Pentachlorinated dibenzo-p-dioxins (PeCDD)
- Pentachlorinated dibenzofurans (PeCDF)
- Hexachlorinated dibenzo-p-dioxins (HxCDD)
- Hexachlorinated dibenzofurans (HxCDF)
- Heptachlorinated dibenzo-p-dioxins (HpCDD)
- Heptachlorinated dibenzofurans (HpCDF)
- Octachlorinated dibenzo-p-dioxins (OCDD)
- Octachlorinated dibenzofurans (OCDF)

Exhibit 3-22 presents total constituent concentration data for dioxins and dibenzofurans obtained from analyses of as managed CKD generated by both hazardous waste burning and

Exhibit 3-21

Total Concentrations of Dioxins and Dibenzofurans in As Generated CKD (μg/Kg)

ANALYTE	HW-1 Sample 1	HW-1 Sample 2	HW-2	HW-3	NH-1	NH-2	NH-3	MAXIMUM	AVERAGE	AVERAGE DETECTED
1,2,3,4,6,7,8-HpCDD	0.0019	0.0018	B 0.25	B 0.0048	B 0.0051	J 0.0011	< 0.003	0.25	0.03824	0.04412
Total HpCDD	0.0037	0.0037	B 0.55	B 0.011	B 0.0098	0.0026	0.0079	0.55	0.08410	0.08410
1,2,3,4,6,7,8-HpCDF	< 0.00056	< 0.001	0.037	0.0024	< 0.0013	J 0.00028	< 0.0076	0.037	0.00716	0.01323
1,2,3,4,7,8,9-HpCDF	< 0.00052	< 0.001	0.0074	< 0.0017	< 0.0013	< 0.00069	< 0.00079	0.0074	0.00191	0.00740
Total HpCDF	0.0043	N.A.	B 0.067	B 0.0024	0.00047	B 0.0013	N.A.	0.067	0.01509	0.01509
1,2,3,4,7,8-HxCDD	< 0.00079	< 0.0014	0.025	< 0.0014	< 0.0012	< 0.00083	< 0.0012	0.025	0.00455	0.02500
1,2,3,6,7,8-HxCDD	< 0.00064	< 0.0021	0.049	< 0.0017	< 0.0018	< 0.00066	< 0.00096	0.049	0.00812	0.04900
1,2,3,7,8,9-HxCDD	< 0.00095	< 0.0019	0.041	< 0.00093	< 0.0014	< 0.001	< 0.0015	0.041	0.00695	0.04100
Total HxCDD	0.012	0.0076	1.5	0.00059	N.A.	N.A.	0.012	1.5	0.30644	0.30644
1,2,3,4,7,8-HxCDF	< 0.00073	< 0.0023	0.024	0.0028	< 0.0011	< 0.0007	< 0.00096	0.024	0.00466	0.01340
1,2,3,6,7,8-HxCDF	< 0.00044	< 0.0016	0.025	0.0028	< 0.00076	< 0.00049	< 0.00099	0.025	0.00458	0.01390
1,2,3,7,8,9-HxCDF	< 0.00044	< 0.0017	0.014	0.00096	< 0.00073	< 0.00085	< 0.0012	0.014	0.00284	0.00748
2,3,4,6,7,8-HxCDF	J 0.0004	< 0.0015	< 0.037	0.0023	< 0.00076	J 0.00057	< 0.00074	0.037	0.00618	0.00109
Total HxCDF	J 0.0004	N.A.	0.23	0.024	N.A.	0.00089	0.0019	0.23	0.05144	0.05144
OCDD	0.0036	0.0036	B 0.1	B 0.034	B 0.018	B 0.0046	B 0.0079	0.1	0.02453	0.02453
OCDF	< 0.001	< 0.0019	0.01	0.0017	< 0.0032	< 0.001	< 0.0014	0.01	0.00289	0.00585
1,2,3,7,8-PeCDD	< 0.0005	< 0.0012	0.03	< 0.0012	< 0.0015	< 0.00057	< 0.0021	0.03	0.00530	0.03000
Total PeCDD	0.0021	N.A.	0.85	N.A.	N.A.	N.A.	0.01	0.85	0.28737	0.28737
1,2,3,7,8-PeCDF	< 0.00046	< 0.00089	0.033	0.0061	0.00052	< 0.00051	< 0.00058	0.033	0.00601	0.01321
2,3,4,7,8-PeCDF	< 0.00053	< 0.00072	0.064	0.0038	< 0.00046	< 0.00033	< 0.00057	0.064	0.01006	0.03390
Total PeCDF	0.00039	N.A.	0.53	0.063	0.00052	0.00071	N.A.	0.53	0.11892	0.11892
2,3,7,8-TCDD	< 0.00031	< 0.0011	0.0056	< 0.00088	< 0.0013	< 0.00037	< 0.0016	0.0056	0.00159	0.00560
Total TCDD	0.0054	0.0035	B 0.44	N.A.	N.A.	N.A.	0.0091	0.44	0.11450	0.11450
2,3,7,8-TCDF	0.0005	< 0.00065	0.038	0.0044	0.00039	< 0.00087	< 0.00099	0.038	0.00654	0.01082
Total TCDF	0.0028	N.A.	0.96	0.076	0.00039	0.014	N.A.	0.96	0.21064	0.21064

"<" = Not Detected, the Associated Value is the Detection Limit.
N.A. = Detection limits are not available for total concentrations.
"B" = The Constituent was Detected in an Associated Blank.
"J" = The Concentration is an Estimate. The Constituent Was Positively Identified at a Trace Value or is a Nontarget Constituent for which no Calibration was Performed.
Average Detected = The average of the samples, excluding those that were not detected.

HW-1 -- Keystone Cement Co., Bath, PA
HW-2 -- River Cement Co., Festus, MO
HW-3 -- Heartland Cement Co., Independence, KS
NH-1 -- Ash Grove West, Inc., Inkom, ID
NH-2 -- Calaveras Cement Co., Tehachapi, CA
NH-3 -- Holnam, Inc., Artesia, MS

Exhibit 3-22

Total Concentrations of Dioxins and Dibenzofurans in As Managed CKD (μg/Kg)

ANALYTE	HW-1 Sample 1	HW-1 Sample 2	HW-2	HW-3	NH-1	NH-2	NH-3	MAXIMUM	AVERAGE	AVERAGE DETECTED
1,2,3,4,6,7,8-HpCDD	0.012	0.012	B 0.24	B 0.014	J 0.00067	< 0.0021	0.0039	0.24	0.040667	0.047095
Total HpCDD	0.023	0.023	B 0.54	B 0.027	J 0.00067	N.A.	0.014	0.54	0.104612	0.104612
1,2,3,4,6,7,8-HpCDF	< 0.0012	< 0.00082	0.1	0.0014	< 0.00047	< 0.00039	< 0.00087	0.1	0.015021	0.050700
1,2,3,4,7,8,9-HpCDF	< 0.00063	< 0.00062	0.012	< 0.00077	< 0.00078	< 0.00068	< 0.0014	0.012	0.002411	0.012000
Total HpCDF	N.A.	N.A.	B 0.15	B 0.0025	N.A.	N.A.	N.A.	0.15	0.076250	0.076250
1,2,3,4,7,8-HxCDD	< 0.0011	< 0.0027	0.022	< 0.00054	< 0.00052	< 0.00095	< 0.0016	0.022	0.004201	0.022000
1,2,3,6,7,8-HxCDD	0.0018	0.0023	0.038	< 0.00088	< 0.00085	< 0.00068	< 0.0016	0.038	0.006587	0.014033
1,2,3,7,8,9-HxCDD	< 0.0016	< 0.0015	0.026	< 0.00057	< 0.00062	< 0.00081	< 0.0018	0.026	0.004700	0.026000
Total HxCDD	0.057	0.06	0.86	0.0081	N.A.	N.A.	0.02	0.86	0.201020	0.201020
1,2,3,4,7,8-HxCDF	< 0.00089	< 0.0016	0.045	0.00048	< 0.00035	< 0.00033	< 0.00063	0.045	0.007040	0.022740
1,2,3,6,7,8-HxCDF	< 0.00049	< 0.00077	0.042	0.00046	< 0.0003	< 0.00027	< 0.00021	0.042	0.006357	0.021230
1,2,3,7,8,9-HxCDF	< 0.00035	< 0.00083	0.016	< 0.00033	< 0.00065	< 0.00063	< 0.0011	0.016	0.002841	0.016000
2,3,4,6,7,8-HxCDF	< 0.00065	J 0.00045	0.067	0.00074	J 0.00043	J 0.00042	< 0.0012	0.067	0.010127	0.013808
Total HxCDF	N.A.	J 0.0045	0.46	0.0027	J 0.00043	J 0.00042	N.A.	0.46	0.093610	0.093610
OCDD	0.009	0.008	B 0.19	B 0.046	B 0.0035	B 0.0027	B 0.011	0.19	0.038600	0.038600
OCDF	< 0.0024	< 0.0023	0.022	0.0016	< 0.0011	< 0.0029	< 0.0032	0.022	0.005071	0.011800
1,2,3,7,8-PeCDD	< 0.00076	< 0.0019	0.021	< 0.00057	< 0.00045	< 0.00043	< 0.0017	0.021	0.003830	0.021000
Total PeCDD	0.032	0.029	0.55	N.A.	N.A.	N.A.	0.0071	0.55	0.154525	0.154525
1,2,3,7,8-PeCDF	< 0.0012	< 0.0015	0.038	0.00048	< 0.00029	< 0.00047	< 0.00078	0.038	0.006103	0.019240
2,3,4,7,8-PeCDF	< 0.0006	< 0.0011	0.085	0.00044	< 0.00031	< 0.00041	< 0.00096	0.085	0.012689	0.042720
Total PeCDF	N.A.	N.A.	0.97	0.0054	N.A.	N.A.	0.00084	0.97	0.325413	0.325413
2,3,7,8-TCDD	< 0.001	< 0.0011	0.0034	< 0.00054	< 0.00059	< 0.0011	< 0.0013	0.0034	0.001290	0.003400
Total TCDD	0.036	0.035	B 0.24	B 0.002	N.A.	N.A.	0.0094	0.24	0.064480	0.064480
2,3,7,8-TCDF	< 0.00033	< 0.0015	0.029	0.00068	< 0.00037	< 0.00073	< 0.0012	0.029	0.004830	0.014840
Total TCDF	N.A.	0.0006	1.1	0.0091	N.A.	N.A.	N.A.	1.1	0.369900	0.369900

"<" = Not Detected, the Associated Value is the Detection Limit.
N.A. = Detection limits are not available for total concentrations.
"B" = The Constituent was Detected in an Associated Blank.
"J" = The Concentration is an Estimate. The Constituent Was Positively Identified at a Trace Value or is a Nontarget Constituent for which no Calibration was Performed.
Average Detected = The average of the samples, excluding those that were not detected.

HW-1 -- Keystone Cement Co., Bath, PA
HW-2 -- River Cement Co., Festus, MO
HW-3 -- Heartland Cement Co., Independence, KS
NH-1 -- Ash Grove West, Inc., Inkom, ID
NH-2 -- Calaveras Cement Co., Tehachapi, CA
NH-3 -- Holnam, Inc., Artesia, MS

are present at very low concentrations in the as managed CKD generated by both hazardous and non-hazardous waste fuel burning facilities. As was the case in the analyses of the as generated CKD, the majority of the dioxins and dibenzofurans were detected at concentrations below 100 ppt, while several samples had homolog concentrations approaching one ppb. Only one homolog was detected at a concentration exceeding one ppb (this time, total TCDF was detected at 1.1 ppb). These results also correspond with the results obtained from EPA's Phase I analyses of dioxins and dibenzofurans, with the exception of one of seven samples where total HpCDD, HxCDD, HxCDF, PeCDF, and TCDF were detected at concentrations exceeding one ppb. As summarized in Exhibit 3-23, the levels of dioxins and dibenzofurans detected in CKD appear to be slightly higher than those levels detected in samples of the as managed CKD, with the exception of total HxCDD, PeCDD, and TCDD homologs. The significance of this difference is not known; however, it is likely explained by both sample and analytical variation.

Finally, Exhibit 3-24 presents a summary of EPA's dioxin and furan analytical data collected in 1992 and 1993 that have been normalized to 2,3,7,8-TCDD equivalence.

Because dioxins and furans were detected in CKD from all 11 sampled facilities, the Agency believes it appropriate to carry consideration of these compounds through the risk assessment and decision rationale components of this report, which means that the presence of these compounds in CKD will influence the Agency's decisionmaking on the RCRA regulatory status of CKD.

General Chemistry

The following general chemistry target analytes were analyzed in all of the samples of as generated and as managed CKD obtained at 15 of the facilities sampled by EPA: chloride, fluoride, sulfate, sulfide, total organic carbon, total cyanide, and moisture content (or percent solids). Except for sulfide and sulfate, the same target analytes were also analyzed in all of the CKD samples obtained at the other five facilities sampled by EPA. Except for cyanide, the general chemistry target compounds were analyzed for general information, such as comparison with similar basic composition data supplied by the industry.

With one exception, total cyanide was not detected in any of the CKD samples. At one facility, cyanide was reported as detected in the as generated and as managed CKD samples. However, the reported levels were less that the method detection limit.

The Agency believes that no further consideration should be given to total cyanide for the purposes of this report because it does not appear to be present in CKD on an industry-wide basis. All of the analytical data from this effort are available in the docket for this Report to Congress.

Volatile Organics

Because of the nature of as generated CKD (i.e., temperature of 300° F or more, very dry matrix), the Agency considered it unlikely that volatile organic compounds would be present in this material. To confirm this, volatile organic compounds were analyzed in as generated CKD samples from 11 facilities.

The chemical analysis of the as generated CKD samples revealed a number of instances in which volatile organics were detected. The following discussion identifies those instances and presents the Agency's conclusions regarding their validity and implications.

Exhibit 3-23

Summary of Dioxin and Dibenzofuran Concentrations in CKD

ANALYTE	AS GENERATED - TOTAL (ug/Kg)			AS GENERATED - TCLP (ug/L)			AS MANAGED - TOTAL (ug/Kg)		
	MAXIMUM	AVERAGE	AVERAGE DETECTED	MAXIMUM	AVERAGE	AVERAGE DETECTED	MAXIMUM	AVERAGE	AVERAGE DETECTED
1,2,3,4,6,7,8-HpCDD	0.25	0.03824	0.04412	0.00003	0.000021	0.000019	0.24	0.040667	0.047095
Total HpCDD	0.55	0.08410	0.08410	0.000032	0.000018	0.000024	0.54	0.104612	0.104612
1,2,3,4,6,7,8-HpCDF	0.037	0.00716	0.01323	< 0.000017	< 0.000011		0.1	0.015021	0.050700
1,2,3,4,7,8,9-HpCDF	0.0074	0.00191	0.00740	< 0.000019	< 0.000014		0.012	0.002411	0.012000
Total HpCDF	0.067	0.01509	0.01509	0.000007	0.000007	0.000007	0.15	0.076250	0.076250
1,2,3,4,7,8-HxCDD	0.025	0.00455	0.02500	< 0.000018	< 0.000013		0.022	0.004201	0.022000
1,2,3,6,7,8-HxCDD	0.049	0.00812	0.04900	< 0.000021	< 0.000012		0.038	0.006587	0.014033
1,2,3,7,8,9-HxCDD	0.041	0.00695	0.04100	< 0.000019	< 0.000012		0.026	0.004700	0.026000
Total HxCDD	1.5	0.30644	0.30644	N.A.	N.A.		0.86	0.201020	0.201020
1,2,3,4,7,8-HxCDF	0.024	0.00466	0.01340	< 0.00001	< 0.000007		0.045	0.007040	0.022740
1,2,3,6,7,8-HxCDF	0.025	0.00458	0.01390	< 0.00001	< 0.000006		0.042	0.006357	0.021230
1,2,3,7,8,9-HxCDF	0.014	0.00284	0.00748	< 0.000024	< 0.000013		0.016	0.002841	0.016000
2,3,4,6,7,8-HxCDF	0.037	0.00618	0.00109	0.000021	0.000011	0.000005	0.067	0.010127	0.013808
Total HxCDF	0.23	0.05144	0.05144	0.000006	0.000005	0.000005	0.46	0.093610	0.093610
OCDD	0.1	0.02453	0.02453	0.00017	0.000073	0.000080	0.19	0.038600	0.038600
OCDF	0.01	0.00289	0.00585	0.000055	0.000028	0.000011	0.022	0.005071	0.011800
1,2,3,7,8-PeCDD	0.03	0.00530	0.03000	< 0.000024	< 0.000012		0.021	0.003830	0.021000
Total PeCDD	0.85	0.28737	0.28737	N.A.	N.A.		0.55	0.154525	0.154525
1,2,3,7,8-PeCDF	0.033	0.00601	0.01321	< 0.000017	< 0.000009		0.038	0.006103	0.019240
2,3,4,7,8-PeCDF	0.064	0.01006	0.03390	< 0.000008	< 0.000005		0.085	0.012689	0.042720
Total PeCDF	0.53	0.11892	0.11892	N.A.	N.A.		0.97	0.325413	0.325413
2,3,7,8-TCDD	0.0056	0.00159	0.00560	< 0.000022	< 0.000013		0.0034	0.001290	0.003400
Total TCDD	0.44	0.11450	0.11450	0.000005	0.000005	0.000005	0.24	0.064480	0.064480
2,3,7,8-TCDF	0.038	0.00654	0.01082	< 0.00001	< 0.000007		0.029	0.004830	0.014840
Total TCDF	0.96	0.21064	0.21064	N.A.	N.A.		1.1	0.369900	0.369900

"<" = Not Detected, the Associated Value is the Detection Limit.
N.A. = Detection limits are not available for total concentrations.
"B" = The Constituent was Detected in an Associated Blank.
"J" = The Concentration is an Estimate. The Constituent Was Positively Identified at a Trace Value or is a Nontarget Constituent for which no Calibration was Performed.
Average Detected = The average of the samples, excluding those that were not detected.

Exhibit 3-24

Summary of Combined 1992-1993 Dioxin/Furan Sampling Results
CKD 2,3,7,8, TCDD Toxicity Equivalence (ppm)

Plant	As Generated	As Managed	Sample Year
River-Festus, MO[a]	2.475×10^{-4} [b]	1.955×10^{-4} [b]	1992 and 1993
Holnam-Tijeras, NM	3.2×10^{-5} [b]	ND	1992
Heartland-Independence, KS[a]	3.6×10^{-6}	6.8×10^{-7}	1993
LaFarge-Fredonia, KS[a]	1.5×10^{-6}	9.0×10^{-6} [b]	1992
Giant-Harleyville, SC[a]	8.2×10^{-7}	4.3×10^{-6}	1992
Ash Grove-Inkom, ID	1.3×10^{-7}	5.3×10^{-8}	1993
Independent-Catskill, NY	4.0×10^{-8}	ND	1992
Calaveras-Tehachapi, CA	7.5×10^{-8}	4.5×10^{-8}	1993
Keystone-Bath, PA[a]	6.7×10^{-8} [b]	3.6×10^{-7}	1993
Holnam-Artesia, MS	8.0×10^{-9}	5.0×10^{-8}	1993
Ash Grove-Chanute, KS[a]	ND	ND	1992

[a] - Hazardous Waste Burner
[b] - Denotes average of two samples
ND denotes a non-detect

In several instances the volatile organic compound methylene chloride was detected in as generated CKD samples. In each instance, however, this compound was also detected in one or more of the corresponding quality assurance blanks, including method, trip, field, and equipment blanks. Therefore, its presence in the CKD sample is attributed to contamination of the sample. Methylene chloride is a common laboratory contaminant, the presence of which at low concentrations is not unexpected and is usually attributed to contamination of the ambient atmosphere in the laboratory.

In several instances, volatile organic compounds were detected in CKD at only one or two facilities, usually near the detection limit. The compounds acetone, carbon disulfide, chlorobenzene, chloroform, ethyl benzene, tetrachloroethene, trichloroethene, and xylene are in this category. Acetone was detected at only one facility. Carbon disulfide, chlorobenzene, chloroform, ethyl benzene, and tetrachloroethene were measured just above the detection limit at only one facility each. Trichloroethene was measured just above the detection limit at only two facilities, and xylene was also detected at only two facilities. The Agency believes that no further consideration should be given to these compounds for purposes of this report because their measured levels are near the analytical detection limit and they do not appear to be present in CKD on an industry-wide basis.

Two volatile organic compounds were detected several times, but only in the samples analyzed by one of the two laboratories that conducted the volatile organics analyses. The Agency believes that their detection is due solely to laboratory contamination or artifacts of the process of analyzing the samples that are unique to the laboratory that reported the analytes as detected. The compounds acetonitrile and trichlorofluoromethane are in this category. Acetonitrile was detected in all of the CKD samples analyzed at one laboratory but in none of the CKD samples analyzed at the other laboratory. Trichlorofluoromethane was detected in five of the CKD samples analyzed at one laboratory but in none of the CKD samples analyzed at the other laboratory. The Agency believes that no further consideration should be given to these compounds for purposes of this Report to Congress because their presence is due solely to laboratory contamination or artifacts of the analytical procedures used.

Four other volatile organic compounds were reported as detected in several CKD samples and are believed to be present due to sample contamination during the process of collecting and analyzing the samples or from artifacts of the analytical procedures. These compounds are benzene, 2-butanone, isobutyl alcohol and toluene. Additionally, the as generated CKD sample from one facility[34] had considerably higher levels of these compounds than did samples from the other facilities. The Agency believes that the integrity of the sample is suspect and therefore should not be considered. The Agency believes that no further consideration should be given to these compounds for purposes of this Report to Congress because their presence is believed to be due to laboratory contamination or artifacts of the analytical procedures.

No as managed CKD samples were subjected to analysis for volatile organics because the Agency believed that any such compounds, even if present in the as generated CKD, would have separated from the CKD due to prolonged exposure of the CKD to the elements (i.e., up to six months).

Semi-Volatile Organics

As was the case with volatile organic constituents, the Agency also considered it unlikely that volatile organic compounds would be present in this material (i.e., temperature of 300° F or more, very dry matrix). To confirm this, semi-volatile organic compounds were analyzed in as generated and as managed CKD samples from six facilities. None of the semi-volatile compounds were detected in either the as generated or as managed CKD samples.

The Agency believes that the semi-volatile organic compounds should not be considered further for purposes of this Report to Congress because they do not appear to be present in CKD, and accordingly, has not included them in the analysis that follows later in this report.

Pesticides

Thirteen target pesticide compounds were analyzed in as generated and as managed CKD samples from 11 facilities. Three of the target pesticide compounds were detected at a total of two facilities. Endrin and heptachlor epoxide were both detected in as generated CKD at one facility. Endosulfan was detected in both as generated and as managed CKD at another facility.

---

[34] Calaveras Cement Company, Tehachapi, CA facility. The results of the split sample analysis were similar.

Because only three pesticide compounds were detected in CKD samples at only one facility each, the Agency believes that the pesticides do not warrant further consideration for this Report to Congress because they do not appear to be present in CKD on an industry-wide basis. Accordingly, the pesticide compounds are not included in the analysis that follows later in this report.

PCBs

Seven PCB compounds were analyzed in as generated and as managed CKD samples from 11 facilities. None of the target PCB compounds were detected in either the as generated or as managed CKD samples obtained by EPA.

The Agency believes that PCBs should not be considered further for purposes of this Report to Congress because they do not appear to be present in CKD, and accordingly, has not included them in the analysis that follows later in this report.

Radionuclides

Raw materials are the major source of common, natural radionuclides that may be found in cement kiln dust because such materials are part of the earth's crust. Therefore, for example, if the limestone used in the manufacture of cement was slightly enhanced with background levels of the radioisotopes of uranium or thorium, slightly enhanced levels of these radionuclides would be expected to be present in the cement kiln dust. In order to properly evaluate any potential risks associated with management of CKD, the Agency conducted radiochemical analyses on samples of CKD for a number of the natural elements. The Agency also decided to analyze the samples for man-made elements, which could be present in raw materials due to their prior release in the environment, for example, from fallout from above-ground nuclear weapons testing and from the explosion of a satellite containing plutonium in the earth's atmosphere.

The Agency conducted gross alpha, gross beta, and gamma analyses as well as isotopic analysis involving chemical separations for the following specific analytes: radium-226, plutonium-238, plutonium-239, uranium-234, uranium-235, uranium-238, thorium-227, thorium-228, thorium-230 and thorium-232.[35,36] Gamma analyses and plutonium isotopic analyses were performed on the as generated CKD samples from all 20 facilities and also on the as managed CKD samples from six of these facilities. Gross alpha and beta analyses and isotopic analyses for the other specific analytes listed above were determined for all of the CKD samples from six of the facilities.

Several of the naturally occurring radionuclides were detected in the CKD samples collected by EPA, including isotopes of lead, radium, uranium, thorium, and potassium. With the possible exception of uranium and potassium, the radiological activities determined for the naturally occurring radionuclides are considered to be within the range of activities normally found in environmental

---

[35] The radionuclide analyses were performed by EPA's National Air and Radiation Environmental Laboratory. The analytical methods that were used for the samples associated with this study are presented in the EPA document entitled *Eastern Environmental Radiation Facility Radiochemistry Procedures Manual (doc. # EPA 520/5-84-006).*

[36] The following radionuclides can be detected by the gamma spectroscopy method used in this sampling and analysis program: Be-7, Na-22, K-40, Cr-51, Mn-54, Co-56, Co-57, Co-58, Fe-59, Co-60, Zn-65, Sr-85, Y-88, Zr-95, Nb-95, Ru-103, Ru-106, Cd-109, Ag-110, Sn-113, Sb-124, Sb-125, I-131, Ba-133, Cs-134, Cs-136, Cs-137, Ba-140, La-140, Ce-141, Ce-144, Hg-203, Bi-206, Bi-207, Tl-208, Pb-212, Bi-214, Pb-214, Ra-226, Ra-228, U-235, U-238.

samples of comparable composition. That is, the activity levels observed for these radionuclides measured in CKD are expected to be no different than, for example, those found in samples of soil and rock that are randomly selected and sampled.

The activity levels for the uranium isotopes may be considered to be slightly higher than average values for these isotopes found naturally in soils and rocks. However, based on the equilibrium state of the isotopes, the levels are consistent with the expected values for environmental samples containing natural uranium which has not undergone any isotopic separation, enhancement, or depletion process. This demonstrates that the observed uranium activity levels are due to unaltered natural uranium. In addition, there is great variability in the natural concentrations of the isotopes of uranium in soils and rocks. Also, the incineration process in a cement kiln could reasonably be expected to slightly increase the concentration of the isotopes of uranium due to the substantial reduction in volume of the fuels burned and materials processed in the kiln. Therefore, the activity levels of uranium isotopes and decay products, and thorium isotopes as well, are consistent with what would be expected in the residual material resulting from the processing of materials containing naturally-occurring radionuclides.

For the man-made elements, the Agency subjected the samples from the 1992 EPA sampling program to gamma scan analysis. Certain samples from four of the facilities were also subjected to gross alpha and gross beta analyses, and isotopic analysis involving chemical separations for isotopes of plutonium, uranium and thorium. Based on the results, the Agency proceeded to analyze all of the samples for the plutonium isotopes.[37] Also, all of the CKD samples from the six facilities sampled by EPA in 1993 were analyzed for the man-made elements. Two of the man-made elements were detected[38] in CKD samples as follows. Three samples of as managed CKD had detectible levels of plutonium-239. Cesium-137 was detected in CKD samples as follows: in as generated and as managed CKD at four facilities; in as generated CKD two facilities; and in the TCLP extract of the as generated CKD from one facility. This is consistent with prior findings that, due to past above-ground weapons testing, very small amounts of Pu-239 and Cs-137 are routinely detected in soils and comparable media.

For the man-made radionuclides, the radiological activities determined for the EPA samples are considered to be within the range of activities normally found in environmental samples of comparable composition.

In summary, the Agency considers that the radiological activities determined for the whole CKD samples collected by EPA to be within the range of activities found in environmental samples of comparable composition. That is, the activity levels observed for the radionuclides measured in CKD are expected to be no different than, for example, those found in samples of soil and rock that are randomly selected and sampled. Nevertheless, because the Agency's sampling and analytical program did reveal detectable amounts of certain radionuclide species in CKD samples, it has decided to

---

[37] This included re-analysis of the samples from the original four facilities. The Agency considers the original analytical results to be valid analytical data. The re-analyses were conducted for comparison purposes.

[38] The analytical detection limit for the EPA radionuclide analyses is considered to be the minimum detectable activity (MDA) value. MDA is the smallest activity that must be present in a sample in order to yield a count rate that will be detected with 97½ % probability given detection criteria that give a 2½ % probability of falsely detecting activity in a blank sample. (The confidence levels cited here are those used by EPA for its analysis of the EPA samples.)

include certain of them in the risk analysis on the basis of their presence at levels exceeding defined risk criteria. Chapter 6 of this report identifies the radionuclide species that were included in the risk analysis along with the basis for their inclusion.

3.3.3 Leachable Concentrations

EPA has established four sets of tests, or characteristics, that are used to determine whether a given waste stream should be managed as a hazardous waste. Of these four characteristics that define RCRA-designated hazardous wastes (ignitability, corrosivity, reactivity, and toxicity), only toxicity is relevant to CKD. This is because CKD is a solid, inorganic, non-flammable substance that is not ignitable or reactive. Although CKD is highly alkaline, it is not considered corrosive under EPA's definitions, because the characteristic does not apply to solid materials. Examining the characteristic of toxicity in CKD is important in that the test is designed specifically to evaluate the potential for toxic trace metals to leach and migrate from solid wastes.

Metals

To assess the potential of CKD to exhibit the toxicity characteristic, EPA performed TCLP and SPLP leachate analyses of subsamples of the CKD samples. EPA compared the maximum and average concentrations (i.e., mass of a particular constituent per unit volume of extract) in TCLP and SPLP leachates from as generated and as managed CKD, as collected from all available sources, with TCLP standards for arsenic, barium, cadmium, chromium, lead, mercury, selenium, and silver. The results of these comparisons are presented in Exhibits 3-25 and 3-26. These comparisons show that, in general, concentrations of trace metals are well below their corresponding TCLP standards. In fact, for some constituents, the maximum observed leachate concentration is more than an order of magnitude below the corresponding regulatory standard. Among these data, however, four samples (two TCLP, two SPLP extracts) of a total group of 244 samples of as generated dust analyzed for lead yielded concentrations greater than the TCLP standard of 5 parts per million (ppm) (see Exhibit 3-25); the maximum concentration for these four samples was 16.5 ppm. Also, two samples of a group of 129 samples of as generated dust analyzed for selenium yielded concentrations greater than the TCLP standard of 1.0 ppm; the maximum concentration of these two samples was 1.711 ppm. As shown in Exhibit 3-26, one of 88 samples of as managed dust analyzed for barium yielded a concentration higher than the TCLP standard (102.000 ppm versus 100.0 ppm), and one of 88 samples of as managed dust analyzed for cadmium yielded a concentration above the TCLP standard (2.55 ppm versus 1.0 ppm).

The reader should note that the outcome of the above analysis may change if EPA revises several existing TC levels and promulgates TC levels for new chemicals based on updated national primary drinking water standards (NPDWS). Specifically, EPA recently revised the NPDWS for barium, cadmium, chromium, lead, and selenium to 2 mg/L, 0.005 mg/L, 0.1 mg/L, 0.015 mg/L, and 0.05 mg/L, respectively. EPA also established a NPDWS for nickel at 0.1 mg/L.

Because most of the target metals analytes were detected in all of the EPA CKD samples, the Agency believes it appropriate to carry consideration of these elements through the decision rationale and risk assessment process of this report, which means that the presence of these elements in CKD will influence the Agency's decision-making on the RCRA regulatory status of CKD.

Exhibit 3-25

Comparison of Maximum and Average Metals Concentrations in As Generated Dust with TC Standards

As Generated CKD-TCLP Test Results (parts per million)									
Analyte	TC Standard	Number of Samples	Maximum Concentration	Ratio of Maximum Concentration to Standard	Maximum Concentration Minus Standard	Average Concentration	Ratio of Average Concentration to Standard	Average Concentration Minus Standard	Number of values > Standard
Arsenic	*5.0*	*227*	*0.636*	*0.13*	*-4.364*	*0.02035*	*0.004*	*-4.979*	*0*
Barium	*100*	*227*	*9.190*	*0.09*	*-90.810*	*0.59762*	*0.006*	*-99.402*	*0*
Cadmium	*1.0*	*227*	*0.508*	*0.51*	*-0.492*	*0.01480*	*0.015*	*-0.985*	*0*
Chromium	*5.0*	*227*	*1.290*	*0.26*	*-3.710*	*0.04571*	*0.009*	*-4.954*	*0*
Lead	*5.0*	*227*	*9.718*	*1.94*	*4.718*	*0.21396*	*0.043*	*-4.786*	*2*
Mercury	*0.2*	*227*	*0.022*	*0.11*	*-0.178*	*0.00083*	*0.004*	*-0.199*	*0*
Selenium	*1.0*	*112*	*1.711*	*1.71*	*0.711*	*0.07302*	*0.073*	*-0.926*	*2*
Silver	*5.0*	*227*	*0.166*	*0.03*	*-4.834*	*0.04147*	*0.008*	*-4.958*	*0*
As Generated CKD-SPLP Test Results (parts per million)									
Arsenic	*5.0*	*17*	*0.014*	*0.003*	*-4.987*	*0.00606*	*0.001*	*-4.994*	*0*
Barium	*100*	*17*	*1.860*	*0.019*	*-98.140*	*0.50462*	*0.005*	*-99.495*	*0*
Cadmium	*1.0*	*17*	*0.004*	*0.004*	*-0.996*	*0.00382*	*0.004*	*-0.996*	*0*
Chromium	*5.0*	*17*	*0.128*	*0.026*	*-4.872*	*0.0243*	*0.005*	*-4.976*	*0*
Lead	*5.0*	*17*	*16.500*	*3.3*	*11.500*	*2.13729*	*0.427*	*-2.863*	*2*
Mercury	*0.2*	*17*	*0.0001*	*0.0005*	*-0.1999*	*0.0001*	*0.0005*	*-0.1999*	*0*
Selenium	*1.0*	*17*	*0.276*	*0.276*	*-0.724*	*0.04578*	*0.046*	*-0.954*	*0*
Silver	*5.0*	*17*	*0.030*	*0.006*	*-4.970*	*0.00697*	*0.001*	*-4.993*	*0*

Exhibit 3-26

Comparison of Maximum and Average Metals Concentrations in As Managed Dust with TC Standards

Analyte	TC Standard	Number of Samples	Maximum Concentration	Ratio of Maximum Concentration to Standard	Maximum Concentration Minus Standard	Average Concentration	Ratio of Average Concentration to Standard	Average Concentration Minus Standard	Number of values > standard
As Managed CKD-TCLP Test Results (parts per million)									
Arsenic	5.0	74	0.867	0.173	-4.133	0.05958	0.0119	-4.940	0
Barium	100	74	102.000	1.020	2.000	2.15876	0.0216	-97.841	1
Cadmium	1.0	74	2.550	2.550	1.550	0.08654	0.0865	-0.913	1
Chromium	5.0	74	1.290	0.258	-3.710	0.13824	0.0277	-4.862	0
Lead	5.0	74	4.570	0.914	-0.430	0.33766	0.0675	-4.662	0
Mercury	0.2	70	0.100	0.500	-0.100	0.00385	0.0192	-0.196	0
Selenium	1.0	66	0.303	0.303	-0.697	0.05055	0.0506	-0.949	0
Silver	5.0	73	0.500	0.100	-4.500	0.04772	0.0095	-4.952	0
As Managed CKD-SPLP Test Results (parts per million)									
Arsenic	5.0	14	0.013	0.003	-4.987	0.00416	0.0008	-4.996	0
Barium	100	14	0.869	0.009	-99.131	0.39564	0.0040	-99.604	0
Cadmium	1.0	14	0.004	0.004	-0.996	0.00336	0.0034	-0.997	0
Chromium	5.0	14	0.373	0.075	-4.627	0.09348	0.0187	-4.907	0
Lead	5.0	14	1.790	0.358	-3.210	0.50310	0.1006	-4.497	0
Mercury	0.2	14	0	0.002	-0.200	0.00012	0.0006	-0.200	0
Selenium	1.0	14	0.086	0.086	-0.914	0.02348	0.0235	-0.977	0
Silver	5.0	14	0.026	0.005	-4.974	0.00706	0.0014	-4.993	0

Dioxins and Furans

As expected due to the extremely insoluble nature of dioxins and dibenzofurans, Exhibit 3-27 shows that no homologs, except OCDD, were detected in TCLP extracts using detection limits ranging from 0.000003 μg/L to 0.000037 μg/L. Total OCDD was detected in two TCLP extracts of as generated CKD samples obtained from non-hazardous waste fuel burning facilities; the measured levels are 0.00017 μg/L and 0.00011 μg/L.

Based on these results, the Agency does not believe that leachable dioxins and furans should be considered further for purposes of this Report to Congress, and accordingly, has not included them in the analysis that follows later in this report.

General Chemistry

EPA did not conduct TCLP analyses of any as generated or as managed CKD for the general chemistry parameters. In addition, as discussed earlier in this chapter, EPA did not expect total cyanide to be present in CKD; therefore, EPA also did not conduct TCLP analyses for cyanide (i.e., as specified in 40 CFR §261, Appendix II, "If a total analysis of the waste demonstrates that individual analytes are not present in the waste, or that they are present but at such low concentrations that the appropriate regulatory levels could not possibly be exceeded, the TCLP need not be run").

Based on the preceding discussion, the Agency believes that cyanide should not be considered further for purposes of this Report to Congress, and accordingly, has not included it in the analysis that follows later in this report.

Volatile Organics

The Agency did not conduct TCLP analyses of the CKD for any of the volatile organic compounds due to EPA's expectations that low or non-detectable total concentrations of the volatile organic constituents would be found in CKD materials (i.e., as specified in 40 CFR §261, Appendix II, "If a total analysis of the waste demonstrates that individual analytes are not present in the waste, or that they are present but at such low concentrations that the appropriate regulatory levels could not possibly be exceeded, the TCLP need not be run"). The Agency believes that the futility of performing such analyses was demonstrated by the fact that no volatile organic constituents were confirmed present in CKD.

Based on the preceding discussion, the Agency believes that the volatile organic compounds should not be considered further for purposes of this Report to Congress, and accordingly, has not included them in the analysis that follows later in this report.

Semi-Volatile Organics

The Agency did not subject CKD leachates to analysis for semi-volatile organic compounds because EPA did not expect that any semi-volatile organic constituents would be found in CKD materials (i.e., as specified in 40 CFR §261, Appendix II, "If a total analysis of the waste demonstrates that individual analytes are not present in the waste, or that they are present but at such low concentrations that the appropriate regulatory levels could not possibly be exceeded, the TCLP need not be run"). The Agency believes that the futility of performing such analyses was demonstrated by the fact that no semi-volatile organic constituents were confirmed present in CKD.

Exhibit 3-27

TCLP Concentrations of Dioxins and Dibenzofurans in As Generated CKD (μg/L)

ANALYTE	HW-1 Sample 1	HW-1 Sample 2	HW-2	HW-3	NH-1	NH-2	NH-3	MAXIMUM	AVERAGE	AVERAGE DETECTED
1,2,3,4,6,7,8-HpCDD	< 0.000019	< 0.000023	< 0.000009	J 0.000016	J 0.000021	< 0.000028	< 0.00003	0.00003	0.000021	0.000019
Total HpCDD	N.A.	N.A.	N.A.	J 0.000032	J 0.000021	J 0.000019	N.A.	0.000032	0.000018	0.000024
1,2,3,4,6,7,8-HpCDF	< 0.000017	< 0.000012	< 0.000003	< 0.000008	< 0.000017	< 0.000014	< 0.000009	<0.000017	<0.000011	
1,2,3,4,7,8,9-HpCDF	< 0.000015	< 0.000018	< 0.000005	< 0.00001	< 0.000019	< 0.000019	< 0.000014	<0.000019	<0.000014	
Total HpCDF	N.A.	N.A.	J 0.000007	N.A.	N.A.	N.A.	N.A.	0.000007	0.000007	0.000007
1,2,3,4,7,8-HxCDF	< 0.00001	< 0.00001	< 0.000004	< 0.000005	< 0.000006	< 0.00001	< 0.000007	<0.00001	<0.000007	
1,2,3,6,7,8-HxCDF	< 0.000008	< 0.00001	< 0.000003	< 0.000003	< 0.000006	< 0.000009	< 0.000006	<0.00001	<0.000006	
1,2,3,7,8,9-HxCDF	< 0.00002	< 0.000024	< 0.000006	< 0.000004	< 0.000012	< 0.00001	< 0.000012	<0.000024	<0.000013	
2,3,4,6,7,8-HxCDF	< 0.000021	< 0.000007	J 0.000006	J 0.000004	< 0.000016	< 0.000015	< 0.000008	0.000021	0.000011	0.000005
Total HxCDF	N.A.	N.A.	J 0.000006	J 0.000004	N.A.	N.A.	N.A.	0.000006	0.000005	0.000005
OCDD	< 0.000035	B 0.000037	B 0.000027	J 0.000077	0.00017	0.00011	J 0.000057	0.00017	0.000073	0.000080
OCDF	< 0.000026	< 0.000033	< 0.000009	J 0.000011	< 0.000022	< 0.000055	< 0.000041	0.000055	0.000028	0.000011
2,3,7,8-TCDD	< 0.000022	< 0.000013	< 0.000005	< 0.000008	< 0.000009	< 0.000017	< 0.000014	<0.000022	<0.000013	
Total TCDD	N.A.	N.A.	N.A.	J 0.000005	N.A.	N.A.	N.A.	0.000005	0.000005	0.000005

"<" = Not Detected, the Associated Value is the Detection Limit
N.A. = Detection limits are not available for total concentrations.
"B" = The Constituent was Detected in an Associated Blank.
"J" = The Concentration is an Estimate. The Constituent Was Positively Identified at a Trace Value or is a Nontarget Constituent for which no Calibration was Performed.
Average Detected = The average of the samples, excluding those that were not detected.

HW-1 -- Keystone Cement Co., Bath, PA
HW-2 -- River Cement Co., Festus, MO
HW-3 -- Heartland Cement Co., Independence, KS
NH-1 -- Ash Grove West, Inc., Inkom, ID
NH-2 -- Calaveras Cement Co., Tehachapi, CA
NH-3 -- Holnam, Inc., Artesia, MS

The Agency believes that the semi-volatile organic compounds should not be considered further for purposes of this Report to Congress because they do not appear to be present in CKD, and accordingly, has not included them in the analysis that follows later in this report.

Pesticides

EPA conducted TCLP leachate analyses for pesticides using as generated CKD from six facilities. There were no pesticide compounds detected in the TCLP leachates.

The Agency believes that the pesticides do not warrant further consideration for this Report to Congress because they do not appear to be present in CKD on an industry-wide basis. Accordingly, the pesticide compounds are not included in the analysis that follows later in this report.

PCBs

The Agency conducted TCLP leachate analyses for PCBs on samples of the as generated CKD collected from six facilities. EPA did not detect any PCB compounds in the TCLP leachates.

Because there were no PCB compounds detected in any of the CKD samples obtained by EPA, the Agency believes that they do not warrant further consideration for the purpose of this Report to Congress. Accordingly, the PCB compounds are not included in the analysis that follows later in this report.

Radionuclides

The Agency conducted gross alpha, gross beta, and gamma analyses as well as isotopic analysis involving chemical separations for the following specific analytes on TCLP leachates of CKD: radium-226, plutonium-238, plutonium-239, uranium-234, uranium-235, uranium-238, thorium-227, thorium-228, thorium-230 and thorium-232. Gamma analyses and plutonium isotopic analyses were performed on TCLP leachates of as generated CKD from six of the facilities. Gross alpha and beta analyses and isotopic analyses involving chemical separations for the other specific analytes listed above were determined for all of the CKD samples from six of the facilities.

Several of the TCLP leachates of the as-managed CKD samples had elevated levels of potassium-40 compared to the other aqueous samples. Potassium-40 is a naturally occurring radionuclide of relatively high natural abundance. It is reasonable to expect that the leaching process would concentrate the potassium-40, thereby producing the elevated activity levels. Since potassium-40 is a beta emitter, this would also explain the somewhat elevated gross beta activities of the TCLP leachate samples. In addition, Cesium-137 was detected in the TCLP extract of one sample of the as generated CKD sample.

For the man-made radionuclides, the radiological activities determined for the EPA samples are considered to be within the range of activities normally found in environmental samples of comparable composition.

As discussed earlier in this chapter, the Agency considers that the radiological activities determined for the whole CKD samples collected by EPA to be within the range of activities found in environmental samples of comparable composition. That is, the activity levels observed for the radionuclides measured in CKD are expected to be no different than, for example, those found in samples of soil and rock that are randomly selected and sampled. Nonetheless, because EPA detected

several radionuclide species in CKD samples, it has decided to include certain of them in the risk analysis on the basis of their presence at levels exceeding defined risk criteria. Chapter 6 of this report identifies the radionuclide species that were included in the risk analysis along with the basis for their inclusion.

3.4 STATISTICAL ANALYSES OF CKD CHARACTERIZATION RESULTS

As discussed in the previous sections of this chapter, the Agency detected potentially significant concentrations of certain trace metals and dioxins and furans in both the as generated and as managed forms of CKD. In an attempt to better understand the significance of these findings, EPA conducted a number of additional analyses.

The Agency notes at the outset that a number of caveats apply to this analysis and the results obtained thereby. These caveats limit the extent to which the results can reasonably be used to draw inferences or conclusions concerning the influence of cement kiln design and operating factors on CKD constituent concentrations. First, most of the CKD composition data in EPA's possession were obtained from one-time "grab" sampling at operating cement plants. The Agency believes that this was the general method employed to generate the PCA Survey and PCA Report data, as well as EPA's 1992 and 1993 field sampling data. Consequently, the data ascribed to a particular facility were collected at a particular point in time, and may or may not accurately reflect the typical composition of CKD or clinker over an extended period of time. In this regard, EPA notes that examination of some of the time series (process control) data submitted by some facility operators in response to the Agency's RCRA §3007 request indicate significant variation, on a day-to-day basis, in the concentrations of major CKD constituents; it seems reasonable that trace constituents may also vary in this manner. Second, the Agency's understanding of the CKD data provided by respondents to the PCA Survey is quite limited; information on collection methods and conditions is largely absent. Thus, for example, CKD constituent concentrations that are attributed to the burning of hazardous waste may actually have been collected when the cement kiln in question was not burning hazardous waste at all or under normal operating conditions.

3.4.1 Metals

As indicated above, for potentially important trace metal constituents, data were available from the following sources and were used for these analyses:

- 1992 EPA Sampling Data
- Individual 1991 Portland Cement Association (PCA) Surveys
- PCA CKD Metals Analysis Report (Draft and Final - January, 1992)
- Bureau of Mines (BOM) Information Circular 8885 (1982)

The Agency conducted the additional analyses of the metals data in three primary steps:

- Step 1 - Examine the concentration data from each source to determine if the measurements are random samples from a normal distribution. If appropriate, calculate a random concentration, the value of which lies between zero and the detection limit for the analytical measurement method, for constituent concentrations that were reported by the laboratory as "undetected."

- Step 2 - Compare the metal constituent concentrations from each of the data sources to determine if there are significant differences between the mean concentrations.[39] If significant differences are not found, then the data from these sources may be assumed to be drawn from the same population and can be combined for subsequent analysis.

- Step 3 - Examine the data for correlations or trends that may suggest how metals concentrations may be influenced by the design and operating characteristics of individual cement kilns.

A detailed description of these analyses and the results obtained thereby are presented in a Technical Background Document for this Report to Congress which is available in the RCRA docket.

For Step 1, EPA observed substantial improvement in the test for normality (the Shapiro-Wilk statistic) in most cases by including the calculated concentrations for the "undetected" constituents. Moreover, substituting these randomly calculated non-zero concentrations for the "undetected" constituent concentrations results in concentrations that are in all cases normally distributed; that is, the hypothesis that the data are normally distributed could not be rejected at the 95 percent confidence level for any material type, analysis type, or constituent. As mentioned above, because standard statistical analyses presuppose normally distributed data, all of the Agency's subsequent analyses are based upon the inclusion of these calculated data.

In Step 2, EPA compared the calculated means from each of the other data sources to the EPA sampling data means using the student t-test. The EPA data served as the basis of comparison because the Agency has the highest level of confidence in its own data set. These comparisons of the means resulted in the following observations:

- Most of the means from the various sources are not significantly different from the EPA sampling data means (at the 95 and 99 percent confidence level).

- For those means that are significantly different from the EPA sampling data at the 95 percent confidence level, most are **higher** than the EPA sampling data means. By combining these data, the effect would be to **increase** the calculated mean constituent concentrations from the original EPA measurements. All subsequent analyses would be **more conservative** as a result.

- For those means that are significantly **lower** than the EPA sampling data, all but three have substantial overlap between the minimum and maximum concentrations reported for each data source. This suggests that the difference may be an artifact of the sampling technique (i.e., the sampling was not random) and that therefore one cannot reject the hypothesis that the samples are from the same population. Further, differences in means did not involve "critical" constituents (i.e., those flagged as hazardous constituents) except for antimony (discussed below).

- Only three mean concentrations were found to be significantly lower than the corresponding EPA sampling data value and to not have overlap in the range of

[39] The Agency used mean values in the parametric statistical tests described in this section after establishing that the data are normally distributed. Parametric statistics require use of the mean rather than some other measure of central tendency, such as the median.

observed concentrations. All three of these are mean concentrations for antimony and were calculated from PCA Report 2 and Bureau of Mines sources for "as generated" dust using "TCLP" and "Total" analytical methods. The reason for this anomaly is not known. It is interesting to note, however, that the mean antimony values reported in PCA Report 2 were two to three orders of magnitude lower than those in PCA Report 1, for reasons that are not fully explained in PCA Report 2 (the final report). Because of this significant, unexplained swing in reported values, the Agency is inclined to discount these data. In addition, the mean antimony concentrations in the EPA and Bureau of Mines data sets differ by only a factor of about two.

Based upon this analysis, EPA concluded that the majority of the calculated mean concentrations for the EPA sampling data are not significantly different than the means from the other sources. The few concentration means that are significantly different do not adversely affect the overall analysis, for the reasons discussed above. Consequently, the Agency believed that it was reasonable to combine, or pool, the data from all of the available sources prior to conducting subsequent (Step 3) analyses.

Nonetheless, because in the next phase of the analysis the constituent data were examined in light of plant-specific design and operating factors, the available data set does not include observations from all active portland cement plants; it does, however, contain data from a substantial percentage of them (47 of the 115 active facilities). That is, because the analysis presented here focuses on cement kiln design and operating factors, only those composition data that can be attributed to specific plants or design and operating factors can be used. Accordingly, the data from the two PCA reports and the 1982 Bureau of Mines cement kiln dust study have not been used in this analysis, because these documents present no information on the design and operating factors of interest, nor do they identify the specific facilities that gave rise to the data presented therein.

EPA's next step was to attempt to determine whether CKD trace metal constituent concentrations might be affected by cement kiln design and operating factors. Given the disparities noted earlier in net CKD generation rates between kiln types and especially across fuel types, EPA focused its examination on these two variables. Accordingly, the Agency conducted t-test comparisons of the mean concentrations of trace metals in CKD found within these respective groups. Results of these analyses are presented below.

T-test to Examine Hazardous Waste Burning Effects. For this analysis, EPA pooled the data from both available sources, i.e., those containing material composition data and an indication of whether the corresponding facility does or does not burn hazardous wastes as fuel. The Agency calculated the mean of the metal concentration data for each Sample Type and Analysis Type subgroup. EPA then compared the mean concentration for each metal within each sub-group for those facilities burning hazardous wastes with those that do not. EPA used the t-test to determine whether the null hypothesis can be rejected for two means representing the same population at a given confidence level.

The majority of the means were not significantly different at the 95 percent confidence level for these two sub-groups; that is, there is no statistically significant difference in the mean concentration of most metals in most material and sample types in CKD generated by kilns burning hazardous waste versus those not burning hazardous waste. Exhibit 3-28 lists those means that may be considered different at a 95 percent confidence level.

Exhibit 3-28

T-test Comparison of Fuel Burning Effects on Metals Concentrations (includes only EPA[a] and PCA Survey Data)

Constituent	Sample Type	Analysis Type	Mean Concentration (ppm)		
			Kilns Burning HW	Kilns Not Burning HW	Ratio (HW + non-HW)
Cadmium	As Generated	Total	1.4×10^{1}	5.2×10^{0}	2.7
Chromium	As Generated	Total	3.9×10^{1}	1.6×10^{1}	2.4
Lead	As Generated	Total	5.3×10^{2}	2.0×10^{2}	2.6
Thallium[b]	As Generated	Total	1.8×10^{0}	2.8×10^{1}	.066
Arsenic	As Generated	TCLP	7.2×10^{-3}	1.2×10^{-2}	0.58
Barium	As Generated	TCLP	9.8×10^{-1}	3.9×10^{-1}	2.5
Cadmium	As Generated	TCLP	4.1×10^{-3}	1.7×10^{-2}	0.25
Nickel[b]	As Generated	TCLP	1.4×10^{-2}	5.3×10^{-2}	0.26
Selenium	As Generated	TCLP	3.4×10^{-2}	9.3×10^{-2}	0.37
Thallium[b]	As Generated	TCLP	2.0×10^{-2}	5.4×10^{-1}	.037
Mercury[b]	As Generated	SPLP	1.0×10^{-4}	9.8×10^{-5}	1.06
Nickel	As Generated	SPLP	1.4×10^{-2}	1.3×10^{-2}	1.07
Thallium[b]	As Generated	SPLP	2.3×10^{-2}	2.0×10^{-1}	0.12
Aluminum[b]	As Managed	Total	7.3×10^{3}	1.5×10^{4}	0.48
Arsenic	As Managed	Total	1.8×10^{1}	9.9×10^{0}	1.8
Barium[b]	As Managed	Total	2.3×10^{2}	1.4×10^{2}	1.6
Cadmium[b]	As Managed	Total	2.7×10^{1}	6.0×10^{0}	4.5
Chromium[b]	As Managed	Total	4.5×10^{1}	2.1×10^{1}	2.1
Mercury[b]	As Managed	Total	9.7×10^{-1}	3.4×10^{-1}	2.8
Lead[b]	As Managed	Total	1.1×10^{3}	1.2×10^{2}	8.8
Selenium[b]	As Managed	Total	1.4×10^{1}	7.5×10^{0}	1.9
Silver[b]	As Managed	TCLP	3.0×10^{-2}	6.2×10^{-2}	0.48
Cadmium	As Managed	TCLP	1.8×10^{-1}	3.3×10^{-2}	5.5
Mercury	As Managed	TCLP	6.0×10^{-3}	1.2×10^{-3}	5.2
Selenium[b]	As Managed	TCLP	8.2×10^{-2}	3.4×10^{-2}	2.4
Chromium	As Managed	SPLP	1.8×10^{-1}	2.7×10^{-2}	6.8
Silver[b]	As Managed	EP	3.3×10^{-3}	5.0×10^{-2}	.065
Cadmium[b]	As Managed	EP	2.2×10^{-3}	1.4×10^{-1}	.016
Lead	As Managed	EP	2.9×10^{-2}	1.4×10^{0}	.020
Aluminum[b]	As Managed	RAI	2.3×10^{4}	1.6×10^{4}	1.4

[a] 1993 sampling and analysis data not included.

[b] Confidence level of 99 percent.

Cadmium, chromium, and lead are found at mean concentrations in as generated CKD that are from 2.4 to 2.7 times higher in dust from facilities burning hazardous wastes than in CKD from facilities not burning hazardous waste fuels. On the other hand, thallium concentrations are decidedly lower in the dust generated by the hazardous waste-burning kilns (and at the 99 percent confidence level); this pattern holds not only for total concentrations but also for results of both leaching procedures (TCLP and SPLP). A number of other constituents are found at significantly lower concentrations in TCLP leachate in CKD from hazardous waste-burning kilns relative to non-hazardous waste burning kilns, including arsenic, cadmium, nickel, and selenium. However, barium is found at higher concentrations in the leachates from hazardous waste-burning kilns.

For as managed CKD, a number of heavy metals are found at significantly higher concentrations in dust from kilns burning hazardous wastes; these include arsenic, barium, cadmium, chromium, mercury, lead, and selenium. Only aluminum is found at a lower mean concentration. Leach test results are somewhat inconsistent, with some constituents (e.g., cadmium) exhibiting higher concentrations in dust from hazardous waste-burning kilns using one leach test (TCLP), and the opposite result using a different though similar leach test (EP).

Overall, certain metals appear to be present at a consistently higher mean concentration in CKD generated by kilns burning hazardous waste than in CKD generated by kilns not using this type of alternative fuel. Lead, cadmium, and chromium are the most prominent examples.

T-test to Examine Influence of Kiln Type (Dry vs. Wet). For this analysis, EPA pooled the data from both available sources, i.e., those containing material composition data and an indication of whether the corresponding facility has dry or wet kilns (only four plants nationwide have both). The Agency calculated the mean of the metal concentration data for each Sample Type and Analysis Type subgroup. EPA then compared the mean concentration for each metal within each sub-group for those facilities with wet kilns to those that have dry kilns. This was performed with the t-test to determine whether the null hypothesis can be rejected, i.e., the two means represent the same population at a given confidence level.

The majority of the means were not significantly different at the 95 percent confidence level for these two sub-groups; those means that are significantly different at this confidence level are presented in Exhibit 3-29.

No statistically significant differences between the wet and dry process are apparent in the total metals concentrations of as generated CKD. For four metals, however, TCLP test results are higher for dust generated by the dry process kilns; mean concentrations of aluminum, cadmium, nickel, and selenium in TCLP leachate from dry kiln as generated dust ranged from 2.4 to 4.4 times those from wet kiln as generated dust. Antimony levels as determined by the SPLP test appear to be almost twice as high for dust from the wet process as from the dry process.

Results from the total metals concentrations tests (acid digestion and RAI[40]) on as managed CKD are striking. Significantly higher concentrations of aluminum, arsenic, barium, cadmium, chromium, copper, mercury, lead, titanium, and zinc are found in the CKD from the

---

[40] The Agency used x-ray diffraction data for metal oxides reported in the PCA surveys to estimate total constituent concentrations of specific metals. These estimated total constituent concentrations have been designated "RAI" in the Report.

wet process kilns; mean concentration differences range from a factor of about two to almost ten, and most of the differences in mean concentration are significant at the 99 percent confidence level. TCLP results for aluminum and chromium are similar. Additional test results from use of the EP method show higher

Exhibit 3-29

T-test Comparison of Kiln Type on Metals Concentrations (includes only EPA[a] and PCA Survey Data)

Constituent	Sample Type	Analysis Type	Mean Concentration (ppm)		
			Dry Kilns	Wet Kilns	Ratio (Dry ÷ Wet)
Aluminum	As Generated	TCLP	1.1×10^{-1}	4.3×10^{-2}	2.4
Cadmium	As Generated	TCLP	1.8×10^{-2}	4.0×10^{-3}	4.4
Nickel[b]	As Generated	TCLP	5.6×10^{-2}	1.4×10^{-2}	4.0
Selenium[b]	As Generated	TCLP	1.1×10^{-1}	3.2×10^{-2}	3.5
Antimony	As Generated	SPLP	2.7×10^{-2}	4.6×10^{-2}	0.58
Arsenic	As Managed	Total	1.1×10^{1}	1.9×10^{1}	0.57
Barium[b]	As Managed	Total	8.9×10^{1}	2.9×10^{2}	0.30
Cadmium[b]	As Managed	Total	1.3×10^{1}	2.8×10^{1}	0.46
Chromium[b]	As Managed	Total	2.4×10^{1}	4.9×10^{1}	0.50
Mercury[b]	As Managed	Total	2.8×10^{-1}	1.2×10^{0}	0.24
Lead[b]	As Managed	Total	1.5×10^{2}	1.3×10^{3}	0.11
Aluminum	As Managed	TCLP	6.1×10^{-2}	2.1×10^{-1}	0.29
Chromium	As Managed	TCLP	9.6×10^{-2}	2.0×10^{-1}	0.48
Arsenic[b]	As Managed	EP	5.2×10^{-2}	1.4×10^{-2}	3.8
Selenium[b]	As Managed	EP	3.6×10^{-2}	3.7×10^{-1}	0.10
Aluminum[b]	As Managed	RAI	1.7×10^{4}	2.0×10^{4}	0.82
Copper	As Managed	RAI	1.2×10^{2}	3.0×10^{2}	0.40
Titanium[b]	As Managed	RAI	1.0×10^{3}	2.2×10^{3}	0.45
Zinc[b]	As Managed	RAI	3.6×10^{2}	2.2×10^{3}	0.17

[a] 1993 sampling and analysis data not included.

[b] Confidence level of 99 percent.

concentrations of selenium in as managed CKD from the wet process, though for most constituents, any differences in mean concentration are not statistically significant.

EPA can discern few overall trends from these results. Lead concentrations seem to be lower in CKD when using the dry process rather than the wet process, and total metals concentrations seem to be generally higher in as managed dust from the wet process. Otherwise, there do not appear to be consistent trends in metals content of these materials with respect to kiln technology type.

To better understand the determinants of trace metal concentrations in CKD, EPA wanted to determine whether there might be design and/or operating factors that influence contaminant concentrations in a direct manner. Therefore, as a next step, EPA examined the correlation between chemical concentration and four individual variables (kiln age, kiln length, recycling rate, and percentage of fuel consumption supplied by coal), to examine the validity of the hypothesis that each in isolation is directly and linearly related to the concentration of individual metallic constituents.

Linear correlation analysis is a quantitative technique that is used to estimate the degree to which two variables are related. Strong positive linear correlation means that as the value of one variable increases, the value of the other increases in direct proportion. Conversely, negative linear correlation means that as the value of one variable increases, the other decreases in direct proportion. Correlation analysis can therefore be used to identify variables that may be useful in explaining or even predicting the value of a variable or phenomenon of interest, and is particularly useful as a preliminary step leading to application of more sophisticated quantitative techniques, such as multiple regression analysis.

The Pearson Correlation Coefficient measures the strength of the linear relationship between two variables; the coefficient value ranges from -1 to +1. When two variables are highly and positively correlated, the coefficient approaches +1. Alternatively, if the variables are negatively correlated (value between -1 and 0), the variables are related inversely. A correlation of zero means that each variable has no linear predictive value with respect to the other. For purposes of its analysis, EPA assumed that Pearson Correlation Coefficient values *greater* than +.75 or *less* than -.75 indicate that a given variable has a possibly significant effect on constituent concentration. EPA has made this assumption because in all likelihood, constituent concentrations in CKD and other materials are a function of several variables, rather than a simple linear function of just one. The Agency's purpose was to identify potentially significant variables for possible further analysis, and to ensure that it did not overlook any clear or dominant explanatory variables. EPA's threshold value of +/- .75 is an arbitrary level to identify those variables that appear to signify or be used to "predict" trace constituent levels.

EPA tested four factors for correlation with constituent concentration values:

- Kiln age;
- Kiln length;
- CKD recycling rate; and
- Percent of energy consumption supplied by coal.

EPA chose these factors because it appears that they may have some impact on the distribution of metallic and non-metallic constituents in the kiln system and CKD.

The Agency examined kiln age because the predominant kiln type being used has changed over time; in recent years many older wet process kilns have been replaced with more energy efficient dry process kilns. Dry and wet process kilns have different material residence times, temperature profiles, and other operating characteristics that may influence constituent concentrations. Moreover, the physical age and condition of a unit may affect its operating performance and, thereby, the characteristics of both product (clinker and cement) and waste (CKD). The kiln length influences the amount of time that dust and raw materials remain in the kiln, possibly altering their chemical composition. Because metallic (and other inorganic) constituents are not destroyed in the kiln system, their build up in and removal from the kiln

system can be key factors in influencing the composition of CKD. CKD recycling rates may be a good indicator of the importance of these phenomena. Finally, EPA analyzed the possibility that the percentage of the energy consumed in making cement clinker that is supplied by coal may correlate with the concentrations of certain constituents in the CKD and other materials. A significant negative correlation may suggest that the use of alternative fuels (e.g., hazardous wastes) exerts an important influence on, for example, the composition of CKD (e.g., with respect to heavy metal concentrations).

In the majority of the cases in which EPA observed extreme (very high or low) Pearson correlation coefficient values there are a small number of observations (eight or less). Significant coefficient values (as defined within this context) are few for the analyses that involved larger data sets. Thus, it is difficult to draw any broad conclusions regarding the possible importance of the operating factors that EPA has examined here with respect to constituent concentrations. Nonetheless, there are some interesting findings from this analysis, which are discussed below.

Correlation Analysis of Kiln Age. No significant correlations (i.e., > .75 or < -.75) are apparent in the as generated CKD data for kiln age. For as managed dust, EP test results suggest both positive (antimony, molybdenum, selenium, and silver) and negative (arsenic, mercury, and zinc) correlations with kiln age. There are no instances of extreme coefficients for any constituent for more than one analysis type using the combined data. For cement, chromium and nickel concentrations are highly and positively correlated with kiln age, as reflected in both total and TCLP test results, while selenium is negatively correlated using these two analysis types. The impact of this finding is limited by the small number of data points (four to seven). TCLP leachate for mercury is positively correlated while total mercury concentration is somewhat negatively correlated.

EPA found no constituents with extreme correlation coefficients using the EPA sampling data. The results using only the PCA data parallel those using the combined data set for cement and as managed CKD because the PCA data set comprises almost all of the data points for cement and as managed CKD.

Correlation Analysis of Kiln Length. In the combined data set, there are no extreme correlation coefficient values from analysis of the as generated CKD data. For the EPA data for as managed dust, the analysis suggests both positive (antimony, molybdenum, and selenium) and negative (arsenic, mercury, and zinc) correlations with kiln length. It is noteworthy that this pattern with the same metals also appeared in the kiln age analysis presented above. Again, sample sizes for this analysis were quite limited (two to eight). A different analysis type ("RAI") indicates a strong positive correlation between kiln length and zinc concentration in as generated CKD. No instances of extreme coefficients resulted for any constituent for more than one analysis type for kiln length.

There are no constituents with extreme correlation coefficients using the EPA sampling data, and no constituents have extreme coefficients for more than one analysis type using PCA Survey Data. The EP and RAI results are, of course, identical to those from the combined data set, because these analysis types are not represented in the EPA data. In the very limited data (three observations from two facilities) for as generated CKD provided in the PCA Survey responses, total concentrations of arsenic, beryllium, cadmium, nickel, vanadium, and zinc have a strong negative correlation with kiln length, while total chromium and lead positively correlate with kiln length.

Correlation Analysis of Recycling Rate. For as generated CKD, only total zinc concentrations display a significant (negative) correlation with recycling rate, and this finding is based on only three observations. For as managed CKD, only a few constituents and analysis types show a strong linear relationship to recycling rates, and in most of these cases, the correlation results are based on only a few data points. Total concentrations of manganese and zinc, and EP concentrations of molybdenum and zinc are negatively correlated, while EP concentrations of antimony and TCLP concentrations of zinc are positively correlated. With the exception of the TCLP zinc concentrations, all of these correlations are influenced by very small sample sizes (two to four observations).

There are no instances of extreme coefficients for a constituent for more than one analysis type for the recycling rate variable.

Within the EPA data set, only silver and thallium concentrations in as managed dust (positive) show any significant correlation with recycling rate. In the PCA Survey data, results for the cement material type are identical to those in the combined data set. For as generated CKD, there are only three observations. These indicate significant negative correlations for total arsenic, beryllium, cadmium, nickel, vanadium, and zinc as well as significant positive correlations for chromium and lead. In as managed CKD, negative correlations are apparent for total manganese and zinc, and for EP concentrations of molybdenum and zinc; positive correlations are observed in EP results for antimony and TCLP results for vanadium and zinc. All but the last of these cases are drawn from very small data sets (two to four data points per analysis).

Correlation Analysis of Percent of Energy Consumption Supplied by Coal. For the as generated CKD data, only total zinc concentrations are strongly (negatively) correlated to coal use; this finding is based upon only three data points. For the as managed CKD data, total concentrations of manganese and zinc, EP concentrations of antimony, and zinc concentrations measured using the "RAI" method are negatively correlated with coal use. In contrast, EP concentrations of cadmium, molybdenum, silver, and zinc are positively correlated with the percentage of energy value derived from coal. Numbers of observations available in these cases range from two to twelve, and there are no instances of extreme coefficients for a constituent for more than one analysis type.

For the EPA data set, no extreme correlation coefficients appear in any material or analysis type, with the exception of total concentrations of lead, which are negatively correlated with the extent of coal use in both as generated and as managed CKD. In as generated CKD, total arsenic, beryllium, cadmium, nickel, vanadium, and zinc are negatively correlated, and total chromium and lead are positively correlated, with the extent of coal use. In as managed CKD, results are identical to those obtained using the combined data set, with the exception that TCLP concentrations of vanadium are positively correlated with the percentage of energy value derived from coal, in addition to the EP results described above.

For the PCA data, as before, cement analysis results are the same as in the combined data set.

3.4.2 Dioxins and Furans

In parallel with its examination of trace metal constituents, EPA evaluated the dioxins and dibenzofurans data for significant relationships and trends. First, the Agency attempted to determine whether or not the data obtained from Phase I and Phase II sampling are comparable

and can be pooled for further analysis. This analysis was necessary because the laboratory methods used during Phase II analysis were selected specifically because they offered far greater sensitivity than those employed for Phase I analysis. T-test comparisons of individual analytes by sample type yielded the following results. No statistically significant differences at the 99 percent confidence level were observed in as generated or as managed CKD, though there were a few instances in which differences were apparent at the 95 percent level (1,2,3,4,7,8,9-heptachlorodibenzofuran in both as generated and as managed dust, and total tetrachlorodibenzodioxin in as managed dust). The means for all analytes in CKD are, as expected, considerably higher in the Phase I data than in the Phase II data, due to the more sensitive laboratory methods employed to generate the Phase II data. Phase II mean values are generally about ten to 30 percent of Phase I means in as generated CKD, while in as managed CKD, these ratios range between 15 and 50 percent.

Based upon these results, EPA concluded that, despite the absence of statistically significant differences between Phase I and Phase II results for CKD, it was probably not reasonable to combine the data for further analysis. To do so would imply that the data are all derived from the same population, an assumption that is known to be false, due to the very different ways in which the two data sets were generated.

Consequently, as a next step, the Agency ran some t-test comparisons of the dioxin and dibenzofuran constituents in the Phase II data set, i.e., the data with more detected values, to determine whether any statistically significant differences exist in CKD generated by cement kilns falling into various groups. Because of the limited number of available data points, EPA was able to conduct only two simple pair-wise comparisons:

(1) Wet process kilns and dry process kilns; and

(2) RCRA hazardous waste-burning kilns and non-hazardous waste burning kilns.

The results of these t-test comparisons yield, with only two exceptions, no statistically significant differences between the respective groups for any group, material type, analysis type, or analyte.

Comparisons of wet and dry process kilns produce an interesting result. As generated and as managed CKD organic constituent concentrations are generally more than one order of magnitude higher in CKD generated by dry process kilns than in CKD generated by wet process kilns.

Mean concentrations in as managed dust generated by kilns burning hazardous waste fuels (as indicated by both total and TCLP analyses) appear to be higher, often by more than one order of magnitude, than in CKD generated by kilns not burning hazardous wastes. The same pattern is observed in the totals analyses of as generated CKD, though in TCLP results, concentrations are marginally higher in the samples collected from kilns not burning hazardous waste fuels. In this latter case, however, nearly all observations are estimated values, because the corresponding measured TCLP concentrations were below detection limits. Nonetheless, these observations are constrained by the relatively small sample population (six facilities -- three RCRA hazardous waste burners and three non-hazardous waste burners) and thus the difficulty in establishing statistically significant differences between these groups. Additionally, the Agency recognizes that other types of fuel (e.g., coal) that may be either burned exclusively or else co-

fired with RCRA hazardous wastes in the kilns could be significant contributors of organics and other constituents that are measured in the CKD.

3.5 CLINKER CHARACTERISTICS

During most of the facility sampling visits conducted by EPA for this study, samples of newly generated clinker were obtained and subjected to chemical analyses similar to those for cement kiln dust. There are two main reasons why EPA collected clinker samples during this study. First, the Agency wanted to be able to compare the actual and relative amounts of certain analytes in clinker with those in CKD as part of the RTC development effort. Second, the analytical data derived from analysis of the clinker samples will be used by EPA in another study. This study is entitled *Use of Hazardous Waste in Cement Production*. EPA's goal in this study is to examine how federal regulations and policies can and do affect the use of hazardous waste in cement production, and, should it be necessary, to determine the level of control necessary to protect human health and the environment.[41]

The samples of clinker that were obtained during this study are from a total of 18 facilities.[42] Eleven of the 18 were using hazardous waste for some portion of their fuel during the EPA sampling. The other seven facilities were not using hazardous waste for fuel during the EPA sampling.

All clinker samples were analyzed for metals, radionuclides, and major ions.[43] Nine of those samples were also analyzed for dioxins, furans, semi-volatile organics, pesticides, and PCB's. Four of these nine samples were also analyzed for volatile organic compounds. Several sets of leachates were also prepared from the whole samples of clinker obtained during the EPA sampling visits. These TCLP and SPLP leachates were analyzed as follows: 18 sets of leachates for metals, and four sets of leachates for dioxins, furans, pesticides, PCB's, radionuclides, and major ions. Volatile organics and semi-volatile organics were not analyzed in clinker leachates because it is believed that these compounds, if present in the original whole samples, would have been driven from the samples during the leachate preparation process and thus could not be quantitated. Exhibit 3-30 presents the results of the clinker characterization for inorganics by fuel type (i.e., non-hazardous and hazardous waste fuels).

Dioxins and furans were not detected in either the whole clinker samples or in the TCLP and SPLP leachates. Thus, it was not feasible to compare dioxin and furan levels in clinker with general fuel type or other operating factors. Accordingly, dioxin and furan levels in clinker do not appear to correlate with levels found in CKD produced at the same facility, i.e., although dioxins were detected in CKD at several facilities, they were not detected in clinker produced at the same facilities.

No pesticides or PCB's were detected in either whole clinker or TCLP and SPLP leachates prepared from the whole clinker samples.

---

[41] For more information, see the report titled *RCRA Implementation Study (RIS) Update: The Definition of Solid Waste* (EPA 530-R-92-021, July, 1992).

[42] One of the 18 facilities was re-visited and sampled a second time for analysis verification purposes. The re-visit is not counted in the statistics or facility counts presented in this section.

[43] At three of the 18 facilities, more than one clinker sample was obtained for sampling and analytical quality assurance purposes.

Only one volatile organic compound was detected in whole clinker. This compound is toluene. It was detected only once and its quantitated level is close to the detection limit. For reasons stated earlier, no TCLP or SPLP leachates were subjected to analysis for volatile organic compounds.

There were no semi-volatile organic compounds detected in whole clinker. There were two instances of quantitation estimates for di-n-butyl-phthalate at levels near 200 ppb. This is, however, below the established analytical method detection limit. For reasons stated earlier, no TCLP or SPLP leachates were subjected to analysis for semi-volatile organic compounds.

Several of the naturally occurring radionuclides were detected in the clinker samples collected by EPA, including isotopes of lead, radium, uranium, thorium and potassium. For the man-made elements, plutonium-238 was detected in clinker from one facility, and plutonium-239 was detected in clinker from another facility.

The Agency has drawn no conclusions at this time regarding the significance of any of the clinker data. The analytical results from clinker characterization for this study are available in the EPA docket for this Report to Congress. The Agency invites comments on all aspects of this clinker characterization data, including the above findings from the Agency's preliminary analysis of the clinker data.

Exhibit 3-30

Analytical Results of Clinker Analyses for Inorganics By Fuel Type (includes only EPA[a] Data)

Constituents	HW Fuel:	No	Yes	No	Yes
	Analysis:	Total	Total	TCLP	TCLP
	Units:	mg/kg	mg/kg	mg/L	mg/L
Antimony	Number of samples	7	9	7	9
	Number of detects	5	9	6	7
	Minimum detected value	9.5	5.3	0.05	0.05
	Maximum detected value	16.5	27.9	0.09	0.08
	Average of detected values	12.2	13.4	0.06	0.06
Arsenic	Number of samples	7	9	7	9
	Number of detects	7	9	7	9
	Minimum detected value	3.8	1.4	0.002	0.002
	Maximum detected value	25.4	14.7	0.006	0.004
	Average of detected values	9.4	7.3	0.003	0.003
Beryllium	Number of samples	7	9	7	9
	Number of detects	5	9	0	0
	Minimum detected value	0.75	0.86	ND	ND
	Maximum detected value	2.4	2.7	--	--
	Average of detected values	1.5	1.4	--	--
Cadmium	Number of samples	7	9	7	9
	Number of detects	0	0	0	0
	Minimum detected value	ND	ND	ND	ND
	Maximum detected value	--	--	--	--
	Average of detected values	--	--	--	--
Chromium	Number of samples	7	9	7	9
	Number of detects	7	9	7	6
	Minimum detected value	26.1	44.3	0.02	0.02
	Maximum detected value	138	150	0.33	0.95
	Average of detected values	60.9	83.5	0.15	0.4
Lead	Number of samples	7	9	7	9
	Number of detects	7	9	6	8
	Minimum detected value	0.77	0.68	0.002	0.002
	Maximum detected value	21	33.1	0.016	1.9
	Average of detected values	4.7	9.3	0.007	0.25

Exhibit 3-30 (continued)

Analytical Results of Clinker Analyses for Inorganics By Fuel Type (includes only EPA[a] Data)

Constituents	HW Fuel:	No	Yes	No	Yes
	Analysis:	Total	Total	TCLP	TCLP
	Units:	mg/kg	mg/kg	mg/L	mg/L
Mercury	Number of samples	7	9	7	9
	Number of detects	0	1	1	0
	Minimum detected value	ND	0.07	0.0002	ND
	Maximum detected value	--	0.07	0.0002	--
	Average of detected values	--	0.07	0.0002	--
Nickel	Number of samples	7	9	7	9
	Number of detects	7	9	0	1
	Minimum detected value	13.1	20.1	ND	0.03
	Maximum detected value	82	91.1	--	0.03
	Average of detected values	33.9	36.5	--	0.03
Selenium	Number of samples	7	9	7	9
	Number of detects	1	2	0	3
	Minimum detected value	0.52	0.92	ND	0.001
	Maximum detected value	0.52	1.6	--	0.014
	Average of detected values	0.52	1.3	--	0.009
Silver	Number of samples	7	9	7	9
	Number of detects	6	5	3	3
	Minimum detected value	1.5	1.1	0.01	0.01
	Maximum detected value	8.2	9.9	0.06	0.06
	Average of detected values	3.5	3	0.02	0.03
Thallium	Number of samples	7	9	7	9
	Number of detects	1	2	1	0
	Minimum detected value	0.19	0.18	0.001	ND
	Maximum detected value	0.19	0.54	0.001	--
	Average of detected values	0.19	0.36	0.001	--

[a] 1993 sampling and analysis data not included.

CHAPTER THREE

CKD GENERATION AND CHARACTERISTICS

3.0 INTRODUCTION 1

3.1 CKD GENERATION 1
3.1.1 Dust Collection Devices 2
3.1.3 Quantities and Fate of CKD Generated 16
Differences in CKD Generation Rates Across Process Types 16
Differences in CKD Generation Rates Across Process Types and Fuel Usage 18
Differences in Gross CKD Generation Rates 18
Differences in Net CKD Generation Rates 19
CKD Recycling 19
Recycling Differences 21
Differences in Fate of CKD Across Process Types 21
Differences in Fate of CKD Across Process Types and Fuel Usage 22

3.2 CKD GROSS CHARACTERISTICS 25
3.2.1 Physical Characteristics 25
3.2.2 Bulk Chemical Characteristics 29

3.3 CKD TRACE CHARACTERISTICS 30
3.3.1 EPA Sampling Program 30
3.3.2 Total Concentrations 32
Metals 33
Dioxins and Furans 37
General Chemistry 41
Volatile Organics 41
Semi-Volatile Organics 44
Pesticides 44
PCBs 45
Radionuclides 45
3.3.3 Leachable Concentrations 47
Metals 47
Dioxins and Furans 50
General Chemistry 50
Volatile Organics 50
Semi-Volatile Organics 50
Pesticides 52
PCBs 52
Radionuclides 52

3.4 STATISTICAL ANALYSES OF CKD CHARACTERIZATION RESULTS 53
3.4.1 Metals 53
3.4.2 Dioxins and Furans 61

3.5 CLINKER CHARACTERISTICS 62

LIST OF EXHIBITS

Exhibit 3-1
Flow Chart of Gross CKD Management Pathways 2
Exhibit 3-2
Air Pollution Control Devices Used at Cement Kilns 4
Exhibit 3-3
Schematic Diagrams of Common Types of Air Pollution Control Devices 5
Exhibit 3-4
1990 Gross CKD Collection by Different Types of Air Pollution Control Devices 7
Exhibit 3-5
Relationship Between Net and Gross CKD Generated in 1990 8
Exhibit 3-6
Gross and Net CKD Generated (1990) 10
Exhibit 3-7
Share of Net CKD Generated and Clinker Production Capacity (1990) 11
Exhibit 3-8
Facilities With High Net CKD Generation Relative to Clinker Capacity 12
Exhibit 3-9
Percentages of Gross CKD Recycled, Sold, and Wasted (1990) 13
Exhibit 3-10
Recycling Rates Among Facilities That Operate Dry Kilns 14
Exhibit 3-11
Recycling Rates Among Facilities That Operate Wet Kilns 15
Exhibit 3-12
Average CKD Generation Rates Per Ton of Product (1990) 17
Exhibit 3-13
Fate of CKD as a Percent of Gross CKD (1990) 23
Exhibit 3-14
Particle Size Distribution of CKD by Process Type 26
Exhibit 3-15
Particle Size Distribution of CKD
Midwest Portland Cement Company, Zanesville, Ohio 27
Exhibit 3-16
Hydraulic Conductivity of Freshly Generated and Managed CKD 29
Exhibit 3-17
Typical CKD Bulk Constituents 31
Exhibit 3-18
Trace Metal Concentrations in As Generated CKD 34
Exhibit 3-19
Trace Metal Concentrations in As Managed CKD 36
Exhibit 3-20
Trace Elements Commonly Found in Native Soils 37
Exhibit 3-21
Total Concentrations of Dioxins and Dibenzofurans in As Generated CKD 39
Exhibit 3-22
Total Concentrations of Dioxins and Dibenzofurans in As Managed CKD 40

Exhibit 3-23
Summary of Dioxin and Dibenzofuran Concentrations in CKD 42
Exhibit 3-24
Summary of Combined 1992-1993 Dioxin/Furan Sampling Results
CKD 2,3,7,8, TCDD Toxicity Equivalence 43
Exhibit 3-25
Comparison of Maximum and Average Metals Concentrations in As Generated Dust with TC Standards 48
Exhibit 3-26
Comparison of Maximum and Average Metals Concentrations in As Managed Dust with TC Standards 49
Exhibit 3-27
TCLP Concentrations of Dioxins and Dibenzofurans in As Generated CKD 51
Exhibit 3-28
T-test Comparison of Fuel Burning Effects on Metals Concentrations
. 56
Exhibit 3-29
T-test Comparison of Kiln Type on Metals Concentrations
. 58
Exhibit 3-30
Analytical Results of Clinker Analyses for Inorganics By Fuel Type 64

CHAPTER FOUR

CURRENT MANAGEMENT PRACTICES FOR CKD

4.0 INTRODUCTION

Four general approaches are used in managing CKD at cement plants: direct recycling, treatment and return to the kiln system, landfilling/stockpiling, and/or off-site use. As discussed in Chapter 3, direct recycling of CKD to the raw feed is preferable when practical; however, excessive alkali content, as well as other operational factors, may limit this practice.[1] Dust that is removed from the system may be disposed in waste management units (WMUs) or sold or given away for beneficial use off site.

This chapter describes current management practices for CKD that is not recycled to the kiln -- that is, it is removed from the kiln system. The first section discusses on-site land disposal of CKD, including the three major types of WMUs. The potential environmental impacts of on-site disposal of CKD, including potential exposure pathways and environmental protection practices at WMUs, are examined in the second and third sections. Finally, in the last section, the off-site beneficial uses of CKD are described.

4.1 ON-SITE LAND DISPOSAL

Waste CKD is most commonly land-disposed in on-site WMUs. Respondents to the 1991 PCA Survey (representing usable data from 79 plants and 145 kilns) reported that they land disposed an average of about 33,000 metric tons of CKD per plant in 1990. Of this aggregated average, wet process facilities disposed of 41,735 metric tons per plant and dry process facilities disposed of 27,419 metric tons per plant. Extrapolating these averages for wet and dry kilns to the entire industry, an estimated 4.2 million metric tons of CKD were land disposed nationwide in 1990.

Of 81 facilities responding to the 1991 PCA Survey, 62 (77 percent) indicated that they manage CKD on site (no off-site CKD WMUs have been reported). Only two of the respondents indicated that they had more than one active WMU. All but one of the facilities in the sample having a wet kiln disposes of CKD on site, and the net CKD from about two thirds of the wet kilns is sold for off-site use. CKD is disposed at somewhat more than half of the dry kilns with preheaters/precalciners. CKD from all but four of the 32 kilns burning hazardous waste is disposed on site, while the CKD from 66 of 93 kilns not burning hazardous waste is so managed. Some facility operators view CKD placement in waste management units as temporary stockpiling rather than disposal, with the expectation that the CKD will ultimately be removed for beneficial utilization. The 23 percent of facilities that do not dispose CKD in WMUs are those that recycle all of their CKD, or sell all of their net CKD.

The 1991 PCA Survey defined land disposal units for CKD as being comprised of three general types: landfills, piles, and ponds. Ninety-seven percent of the respondents with WMUs

---

[1] In this case, CKD can be treated using various methods to remove alkalies and can then be recycled to the kiln system. These methods are described in Chapter 8. When in-plant closed loop recycling has reached its practical limit, CKD must be removed from the system.

classified their units as one of these three types. Three percent of the responses, or two facilities, indicated that they managed CKD using a slight variation of these types.

4.1.1 Landfills

At cement production facilities, landfills are reportedly the most common on-site management method. Landfills accounted for 52 percent of the WMUs in the survey responses. Landfills are generally defined as WMUs in which material is disposed below the topographic grade and is sometimes buried between layers of earth. Usually landfills are artificial structures equipped with an engineered liner and a leachate/run-off collection system. For CKD disposal, however, landfills are generally not engineered structures; that is, they generally were not constructed in the manner that current solid waste landfills are constructed, with liners or run-off collection systems. CKD is typically dumped into a retired portion of the existing limestone quarry or in a nearby ravine. The CKD is either transported by truck to the quarry, pumped as a slurry, or insufflated through pipelines. In a typical operation, CKD is transported by truck to the quarry where it is dumped at the edge. The dust typically remains where dumped for a period of weeks or months to "weather," after which it is bulldozed over the edge into the quarry.

As an example, the River Cement plant in Festus, Missouri transports pelletized waste dust to its on-site CKD monofill. The monofill is located in a ravine that the facility has reportedly closed off with an earthen berm at its base. Once at the monofill, the CKD is bulldozed into a desired location.

4.1.2 Piles

With a slightly lower count than landfills, 43 percent of the WMUs in the survey responses were reported as piles. Like landfills for CKD, piles also are not engineered structures but are instead accumulations of CKD in designated areas. Such piles may or may not be above grade, and they may or may not be contained within the quarry. EPA believes that there was probably little differentiation between piles and landfills from the perspective of the respondents to the survey.

For example, the Ash Grove Cement plant in Inkom, Idaho, prior to installing a CKD dust leaching system approximately 20 years ago, disposed waste CKD in several large piles at the edge of the facility's limestone quarry. The piles have since been covered with shale, and during a May 1993 sampling visit attended by EPA personnel, vegetation was observed growing on many of the pile surfaces. During another sampling visit conducted in May 1993 at the Keystone Cement plant in Bath, Pennsylvania, EPA personnel observed several large CKD piles that had accumulated on open ground adjacent to active cropland.

4.1.3 Ponds

Disposal ponds at cement plants are different from landfills and piles in that CKD is stored underwater. This is an unusual WMU type and only one of the survey respondents indicated that it managed CKD in this manner. However, the Holnam Incorporated cement plant in Artesia, Mississippi has constructed an active CKD pile along the edge of an inactive limestone quarry, which has filled with water to form a lake. During a May 1993 sampling visit to the facility attended by EPA personnel, the active CKD pile was observed extending into the lake. The active pile will be extended further into the lake as more CKD is added.

Use of ponds creates a permanent hydraulic head on the dust, which imposes a continuous downward pressure and creates the potential for downward migration of contaminants into ground water. Additional discussion of this type of WMU and its implications for environmental and human health risk may be found in Chapter 6.

4.1.4 Dimensions

The size of CKD waste management units can vary considerably, depending upon such factors as unit type, age, and the quantity of dust discarded. The 1991 PCA Survey responses generally did not provide clear data on the volume of CKD contained in the waste management units. However, unit thickness and basal area measurements were reported, and these are presented in Exhibit 4-1. The information available from the survey is insufficient to calculate total volumes, because unfounded assumptions of uniform unit geometry (e.g., a cylindrical or rectangular shape) would provide inaccurate results.

As shown in Exhibit 4-1, piles tend to be the largest units, attaining a maximum height or thickness of 56.4 meters (m) (185 feet), according to usable responses to the survey, and averaging 15 m in thickness or height. Landfills average 14 m in thickness, with a maximum reported thickness of 34.6 m. The landfill units averaged twice the basal area of the piles, at approximately 7.9 hectares (19.4 acres), compared to about 3.6 hectares for the piles. These units can occupy significant land areas, covering up to 54.2 hectares. The pond and the "other" units are very small in comparison in basal area.

Exhibit 4-1

1991 CKD Waste Management Unit Dimensions

	# WMUs With Usable Responses[a]	Thickness (meters)			Basal Surface Area (hectares)		
		Min.	Max.	Avg.	Min.	Max.	Avg.
Pile	18 of 28	3.05	56.4	15	.04	8.4	3.8
Landfill	15 of 34	4.3	34.6	14	.19	54.2	7.9
Pond	1 of 1	3.7	3.7	3.7	.36	.36	.36
Other	1 of 2	24.7	24.7	24.7	.03	.03	.03

[a] Based on usable responses to the 1991 PCA Survey.

4.1.5 Codisposal

Facility operators also use land disposal units for small quantities of materials other than CKD. Information provided in the PCA Survey responses indicated that, the 66 CKD WMUs, 23 percent contained non-CKD waste materials in addition to CKD. These materials, totalling 22,333 metric tons, include furnace brick, concrete debris, and tires, and constitute less than one percent of the material reporting to disposal in these units in 1990. The quantity of quarry overburden co-disposed with CKD in 1990 nearly equalled CKD disposal quantities in 1990.

This material, because of its earth-like nature, was not considered a "waste material" when performing this analysis.

4.1.6 Remaining Useful Life

As facility operators continue to land-dispose CKD, the available capacity of existing waste management units will decrease. The 1991 PCA Survey responses yielded data regarding the remaining useful life of WMUs. Exhibit 4-2 provides a breakdown of these data in 10-year intervals. Of the 53 respondents with usable data, most (55 percent) of the CKD WMUs will be full to capacity within the next 20 years.

Exhibit 4-2

Remaining Life of Waste Management Units[a]

Remaining Useful Life (Range in Years)	Number of CKD Waste Management Units	Percent of CKD Waste Management Units[b]
0-9	13	24.5
10-19	16	30.2
20-29	9	17.0
30-39	1	1.9
40-49	5	9.4
50-59	3	5.7
60-69	1	1.9
70-79	0	0.0
80-89	0	0.0
90-99	1	1.9
100-109	3	5.7
200-209	1	1.9
Total	53	100

[a] Based on usable responses from 1991 PCA Survey

[b] (# CKD WMU's in a given range / Total # CKD WMU's) x 100

4.2 POTENTIAL EXPOSURE PATHWAYS

CKD management practices may affect human health and the environment through three primary exposure pathways: ground water, surface water, and air. The potential for release to these media varies according to the CKD management practices and the control measures

employed at a given facility. This section introduces the mechanisms by which CKD constituents are released to each medium, while Chapter 6 evaluates the human health and environmental risks associated with the different release and exposure pathways. Exhibit 4-3 presents a layout of a typical cement plant that illustrates potential exposure pathways. At a typical facility, a surface water body runs past the facility, while CKD is managed in a waste management unit in a retired quarry that is near ground-water level.

Exhibit 4-3

Typical Cement Plant Layout

4.2.1 Ground Water

Precipitation may percolate through CKD and leach constituents into the liquid phase. Based on the constituents' tendency to remain bound up in the matrix of the waste (i.e., the mobility of the constituents and their solubility in water), they may then migrate through the vadose zone (i.e., unsaturated zone) and enter an underlying aquifer. After release to ground water, the constituents will move with the general flow of the ground water, although at a

velocity that is slower than the ground water itself depending on their individual tendencies to bind to soil. Exposure to ground-water contaminants can occur through the domestic use (e.g., drinking water source) of untreated ground water. Potential migration to ground water is a particular concern when CKD is managed underwater, such as in surface impoundments or flooded quarries. The standing water column in these types of waste management units exerts a downward pressure (hydraulic head) that forces water through the vadose zone to the ground water.

For CKD management, ground water may be a potential exposure pathway because several CKD constituents (e.g., arsenic) are particularly mobile in ground water under high-pH, a condition associated with CKD leachate. In addition, many of the facilities are underlain by shallow aquifers, and only a few facilities have control measures in place to prevent or detect the migration of CKD leachate. Such control measures include the installation of synthetic or natural (e.g., compacted clay) liners, installation of leachate detection/collection systems, capping CKD management units to prevent leaching by precipitation, and installation of slurry walls to prevent lateral ground-water migration.

4.2.2 Surface Water

Stormwater run-off from a waste management unit is an important release mechanism, as precipitation may carry constituents in either a dissolved or suspended form through natural flow patterns to nearby surface waters or farm fields. Flooding or overflow of submerged WMUs may also result in CKD constituents being released to streams and rivers. In addition, constituents of concern may be released to surface water by migrating through ground water that discharges to a surface water body.

Human and ecological receptors may be exposed to surface water contamination through various means, including drinking water intake, ingestion of contaminated fish or shellfish, and direct contact with contaminated water. Common practices for controlling releases[2] to surface water include the leachate controls as described above for ground water; stormwater run-on/run-off controls that divert water from piles on landfill areas and/or collect run-off from the WMU for treatment prior to release to surface waters; and capping or covering.

4.2.3 Air

CKD constituents can be released to the air in the form of a gas or a particle. The only constituents that can be released as a gas are volatile or semivolatile organic chemicals (e.g., benzene and toluene), which tend to be present in relatively low concentrations in CKD, if present at all. Most CKD constituents (e.g., metals) are not volatile but could be released to air through fugitive dust emissions. Dust particles may be suspended in the air by either wind erosion or mechanical disturbances. The extent to which dust is blown into the air by wind erosion depends on a number of site-specific characteristics, including the texture (particle size distribution) and moisture of CKD on the surface of piles, the presence of nonerodible elements such as clumps of grass or stones on the pile, the existence of a surface crust, and wind speeds. Mechanical disturbances that can serve to suspend CKD constituents in the air include vehicular traffic on and around CKD piles, CKD dumping and loading operations, and transportation of CKD around a plant site in uncovered trucks. Cement plants may use a variety of control

---

[2] Stormwater controls and other regulatory requirements addressing releases to surface waters are described in Chapter 7.

measures to limit the release of CKD to the air.[3] For example, CKD may be "nodulized" in a pug mill, compacted, wetted, covered, and/or mixed with large chunks that are not susceptible to wind erosion.

CKD constituents that are released to the air are transported and dispersed by the winds and eventually deposited onto land or water, either by settling in a dry form or by being entrained in precipitation. Humans and other organisms can be exposed to the constituents in a number of ways. For example, airborne particles that are equal to or smaller than 10 micrometers (μm) in size are respirable and may be inhaled directly. Contaminants that have settled onto soil may be incidentally taken into the mouth and ingested, and contaminants that have been deposited on vegetation may be ingested via the food chain. In the specific case of radionuclides, people may be exposed to direct radiation emanating from radionuclides in the air or deposited onto the ground.

4.3 ENVIRONMENTAL PROTECTION PRACTICES

As noted above, CKD WMUs can represent permanent placement of a large volume of material that extends over a significant area. Because CKD disposal units are generally uncovered, they are subject to all of the climatic conditions of the geographic region in which they are located. Precipitation events are notable because they can transport particles and solubilized constituents beyond the boundaries of the WMU. Gusting winds are another potential transport mechanism.

To reduce the potential for off-site migration of CKD and CKD constituents, facilities managing CKD in WMUs can employ various environmental protection practices. These include run-off control/collection, run-off collection/treatment, leachate control/collection, leachate collection/treatment, slurry walls, liner systems, dust suppression, dust compaction, ground-water monitoring, and the preparation and implementation of closure plans. Exhibit 4-4 displays these practices as reported for 66 WMUs at the 62 facilities responding to the PCA Survey for which usable data were available. To relate these data to analyses presented in previous sections, EPA has classified WMUs by those receiving CKD from kilns burning hazardous waste and those receiving CKD from kilns not burning hazardous waste. Although statistical conclusions are tenuous given the small number of observations in some cases, Exhibit 4-4 reports the frequencies of each practice as both number and percentage of WMUs in the respective fuel use category. It should be noted that a single WMU may employ several of the listed environmental protection practices.

Run-off control/collection involves diverting precipitation away from the WMU to a discharge area (e.g., a stream) or into a collection unit (e.g., a treatment impoundment) or directly to a receiving stream. As presented in Exhibit 4-4, about 50 percent of both kilns burning hazardous waste and those not burning hazardous waste perform some type of run-off control. The diverted run-off is typically either discharged directly to a surface water stream, or discharged after some form of treatment. Existing treatment methods are unknown, though over 20 percent of the WMUs possess systems that reportedly treat collected run-off.

Leachate controls are any devices or approaches (e.g., underdrains) to prevent aqueous liquid that has entered managed CKD from exiting the WMU in an uncontrolled manner,

---

[3] Plant-specific air pollution control permits often explicitly address fugitive dust emissions from CKD piles and other sources. A more complete discussion of this topic is presented in Chapter 7.

particularly to the ground water. Overall, about 18 percent of the WMUs have leachate control, while about half that number also treat the leachate in some manner. This practice is more prevalent among the facilities not burning hazardous waste; 10 of 50 WMUs in this category have leachate controls, while only two of 16 WMUs containing CKD from hazardous waste-burning kilns are so equipped.

Slurry walls are very low-permeability walls cast-in-place in trenches of varying depth and width around a waste management unit. This technology is one of the more costly environmental control measures, and is reported at only nine of the 66 WMUs (approximately 15 percent) overall. Seven of these nine are WMUs receiving CKD from hazardous waste burners, while only two (representing four percent) of the WMUs from kilns not burning hazardous waste have such devices.

Exhibit 4-4

Environmental Protection Practices at CKD Waste Management Units Active in 1990, by Kiln Fuel Use Type

Environmental Protection Practices[a]	All Fuel Types		Hazardous Waste Burners		Not Hazardous Waste Burners	
	No. of WMUs	Percent of WMUs[c]	No. of WMUs	Percent of WMUs	No. of WMUs	Percent of WMUs
Run-off Control/Collection	34	51	8	50	26	52
Run-off Collection/Treatment	15	22	4	25	11	22
Leachate Control/Collection	12	18	2	13	10	20
Leachate Collection/Treatment	5	8	1	6	4	8
Slurry Walls	9	14	7	44	2	4
Modified Natural Liner	7	11	1	6	6	12
Dust Suppression	29	44	9	56	20	40
Dust Compaction	22	33	6	38	16	32
Other	14	21	3	19	11	22
Ground-Water Monitoring	11	17	4	25	7	14
Closure Plan (Approved)	10	15	3	19	7	14
Closure Plan (Not Approved)	2	3	1	6	1	2
None	26	39	5	31	21	42
Total in Response Group[b]	66		16		50	

[a] A WMU and/or a facility may have more than environmental protection practice.

[b] Based on 81 usable facility responses to 1991 PCA Survey, 62 facilities of which had active WMUs in 1990.

[c] Calculated as number of WMUs in a fuel-type column for the relevant environmental protection practice divided by the total WMUs for that fuel type. For example: 8 WMUs from hazardous waste burners practice run-off control/collection, divided by 16 total WMUs from hazardous waste burners, equals 50 percent.

Liners may be used in a WMU to restrict leachate from entering permeable soil layers and underlying ground-water aquifers. Liners can be natural or synthetic. Examples of natural liners are the indigenous bedrock or *in-situ* clay/shale. Natural liners can be modified through compaction to reduce downward migration channels. Synthetic liners may include compacted clay/shale, asphalt, concrete, or a manufactured woven fabric. Twenty-two percent of the respondents to the 1991 PCA Survey who have WMUs indicated that liners are not used. Of the 78 percent of respondents who indicated that they did use liners in their WMUs, none reported use of synthetic liners. This information is in accordance with EPA's observations during site visits, which revealed that all WMUs visited had only natural liners, typically the bedrock within a retired portion of a limestone quarry. As shown in Exhibit 4-4, seven (about 11 percent) of the respondents across both fuel types stated that they used modified natural liners.

Dust suppression/control is defined in the 1991 PCA Survey as any means of reducing the level of ambient breathable dust. Controls under this practice can include wetting, compacting, or covering CKD. Almost half of the WMUs across both fuel types reportedly have some form of dust control system. *Dust compaction* involves the densification of waste material to increase available disposal space and ameliorate dust migration. About 30-40 percent of the WMUs of both fuel types reportedly undergo some type of dust compaction.

Respondents to the "*other*" category indicated methods used to cover or contain a CKD WMU (soil cap, clay cap, berm, rip-rap cap, tree planting, etc.). Such activities were reported for about 20 percent of units, both within and across fuel types.

Overall, approximately 17 percent of WMUs have some type of *ground-water monitoring* system. In absolute terms, more non-hazardous waste burners (seven) monitor ground-water quality than hazardous waste burners (four), though in percentage terms, nearly twice as many hazardous waste burners in the sample of 66 monitor ground water as non-hazardous waste burners (25 percent vs. 14 percent).

In general, *closure plans* do not appear to be significantly more common for WMUs at hazardous waste-burning facilities than for WMUs at facilities that do not burn hazardous waste. Ten of the twelve units addressed by a closure plan have been approved by the pertinent regulatory agency.

Finally, 39 percent of the WMUs have none of the environmental controls listed in Exhibit 4-4; this finding applies to 31 percent of WMUs from hazardous waste-burning facilities, and to 42 percent of the facilities not burning hazardous waste. Since, however, the quality and effectiveness of reported systems is unclear, it is difficult to assess what, if any, increased exposure risks might exist at these WMUs compared to WMUs that do utilize environmental protection practices. As mentioned above, the implications of the use or lack of use of various environmental protection practices is discussed in greater detail in Chapter 7.

4.4 BENEFICIAL USE OF CKD

When CKD is not put back into the kiln or disposed on site, a facility may sell it for off-site beneficial use. EPA's data regarding beneficial uses of CKD came from two sources, the 1991 PCA Survey and cement facility responses to EPA's 1992 request for information under RCRA section 3007. Besides information on the beneficial uses of CKD, the PCA Survey data included information on gross and net CKD generation rates, kiln type, and fuel type. The §3007 responses contained information on beneficial uses of CKD, but did not include that other information. Some facilities submitted both the 1991 PCA Survey and a response to the §3007

request for information, however, there were other facilities that only sent a response to the section 3007 request. Therefore, only 1991 PCA Survey data were used to relate off-site use to generation rates, kiln type, and fuel type. The aggregated data were used to calculate percentages of CKD sold (or given away) for off-site beneficial uses.

Of the approximately 9.8 million metric tons (9.4 million tons) of CKD generated from 145 kilns at 79 plants providing usable responses in the 1991 PCA Survey, approximately 6.5 percent of gross CKD was sold off site or given away for beneficial use by 44 facilities. Responses to EPA's 1992 RCRA §3007 request indicate that at least 15 additional plants sold or gave away CKD in 1990. Respondents to the 1991 PCA Survey sold (or gave away) an average of 3,920 metric tons of CKD per kiln in 1990, representing 5.8 percent of the gross CKD. Of this aggregated average, wet kilns sold 7,833 metric tons per kiln and dry kilns sold 1,866 metric tons per kiln, accounting for 13.3 percent and 2.6 percent of gross CKD. Of the dry kilns, dry long kilns sold or gave away 1,993 metric tons per kiln (2.8 percent of gross CKD) and dry kilns with preheaters/precalciners sold 1,721 metric tons per kiln (2.3 percent of gross CKD). Wet kilns sell or give away a higher average percentage of their gross CKD than dry kilns. When considering fuel type, there is no apparent link between fuel type and percent of gross CKD sold or given away. Dry kilns that burn hazardous waste sell or give away a higher percentage of gross CKD than dry kilns that do not burn hazardous waste. On the other hand, wet kilns that do not burn hazardous waste sell or give away a higher percentage of gross CKD than wet kilns that burn hazardous waste.

The primary end-use applications for CKD sold off site as categorized in the 1991 PCA Survey were waste stabilization, soil amendment (both as a soil stabilizer and as a fertilizer), liming agent, materials addition, road base, and "other." Exhibit 4-5 below provides survey and §3007 data regarding end-use applications for CKD sold off site. As shown in the exhibit, 71 percent of the approximately 0.94 million metric tons of CKD sold off site in 1990 was used for waste stabilization. Soil amendment accounts for the second largest use, approximately 12 percent. The category "other" includes uses such as wet scrubbing or general undefined agricultural use. These categories are briefly discussed below. More detailed discussion of both these current and potential beneficial utilizations of CKD may be found in Chapter 8. In addition, researchers have investigated using CKD in other applications, including as an ingredient in livestock feed, as a lime-alum coagulant, as a mineral filler, as an ingredient in the manufacture of lightweight aggregate, and as a replacement for soda ash in the manufacture of green glass.

4.4.1 Waste Stabilization

Waste stabilization was, by far, the most common beneficial use of CKD, accounting for just under 71 percent of the total in 1990 (see Exhibit 4-5). CKD can absorb excess liquids and provide an alkaline environment to neutralize acids. Through its absorption capacity, CKD can dewater contaminated materials to increase weight-bearing capacity and to reduce the presence of free leachate. One of the primary forms of waste stabilization for which CKD is used is for municipal sewage treatment sludge. It is an economical and effective means of dewatering and stabilizing raw or digested sewage treatment sludges, thereby rendering such sludges more conducive to handling. The treated sludges can then be used as landfill cover, structural fill material, dike construction material,

Exhibit 4-5

Estimated Off-Site Uses for CKD Sold/Given Away[a]

Off-Site Uses of CKD	Quantity (Metric Tons)	% of Total Off Site[b]	# Facilities Burning HW	# Facilities Not Burning HW
Total CKD Sold/Given Away 1990	940,000	100.0	16	47
Used for Waste Stabilization	668,274	70.8	15	35
Used as Soil Amendment	110,676	11.7	1	13
Used as Liming Agent	52,480	5.6	1	5
Used for Materials Addition	25,365	2.7	0	3
Used as Road Base	10,832	1.2	0	4
Other	75,840	8.0	0	13

[a] The information in this table was estimated from the 1991 PCA Plant Information Summary, the 1991 PCA Surveys returned by 88 facilities and the responses of 85 facilities to the EPA's 1992 request for information under RCRA section 3007. The data obtained thereby address 109 facilities. The data in this table were extrapolated to the industry as a whole, i.e., from 109 to 115 facilities.

[b] (tons used off site for given use/total tons used off site) x 100

and in agricultural applications.[4,5,6,7] Waste stabilization with CKD is found at wastewater treatment plants (WWTPs) and chemical production facilities.

In addition to municipal sludge stabilization, the use of CKD to solidify oil sludge also has evoked a fair amount of interest and research.[8,9,10] According to one source, CKD has

---

[4] Keystone Cement Company, date unknown. *StableSorb: A Coproduct of Cement Manufacturing With a Variety of Uses*. Product Brochure.

[5] Burnham, J.C., 1988. *CKD/Lime Treatment or Municipal Sludge Cake, Alternative Methods For Microbial and Odor Control*. Paper from Proceedings of National Conference on Municipal Sewage Treatment Plant Sludge Management. June 27-29. Palm Beach, Florida.

[6] Personal communication with J. Patrick Nicholson, N-Viro Soil, December 7, 1992.

[7] Kelley, W.D., D.C. Martens, R.B. Reneau, Jr., and T.W. Simpson, 1984. *Agricultural Use of Sewage Sludge: A Literature Review*. Bulletin 143. Virginia Water Resources Research Center, Virginia Polytechnic Institute and State University, Blacksburg, Virginia. December. p. 38.

[8] Morgan, David S., *et al.*, 1984. *Oil Sludge Solidification Using CKD*. Journal of Environmental Engineering. October.

[9] Thorsen, J.W., *et al.*, 1983. *In Situ Stabilization and Closure of an Oily Sludge Lagoon*. 3rd Ohio Environmental Conference. March. Columbus, Ohio.

proven to be one of the most efficacious and economical means of solidifying non-recoverable waste oil sludge, producing a stable and compactible fill material with good compressive strength. Solidification of oily sludge in landfills makes it possible to use a reclaimed landfill site for industrial construction.[11]

CKD has also been used to neutralize and stabilize some additional wastes such as acid waste, synthetic wastes, contaminated dredged materials, and non-degradable liquid hazardous wastes. Finally, CKD has been used both alone and in conjunction with other soil stabilizing agents to temporarily or permanently increase the stability of soils at locations such as construction sites. CKD has also been utilized on a limited basis to reclaim settling ponds, lagoons, and abandoned mines.

4.4.2 Soil Amendment (Fertilizer)

As shown in Exhibit 4-5, about 12 percent of the CKD used beneficially in 1990 was used as a soil amendment, mostly as fertilizer. Like agricultural lime, CKD is alkaline and contains a number of essential plant nutrients. Because of these parallel characteristics, CKD has been used as an agricultural soil amendment for a number of years. CKD possesses significant fertilizer potential, particularly because of its high potassium content. It has been used to this end at the state and local levels in Ohio, Illinois, and Pennsylvania, because it provides savings over substitute products.[12] Agricultural studies relating to the use of CKD as a fertilizer have been undertaken in several countries around the world, including Russia, Poland, Netherlands, Czechoslovakia, and India.

Although there has been a considerable amount of research conducted on CKD use as a fertilizer, existing applications of CKD for this purpose have been mostly anecdotal, and there is only limited evidence that commercial CKD use as a fertilizer is growing significantly.

4.4.3 Liming Agent

Nearly six percent of the CKD used beneficially in 1990 was used as a liming agent. CKD has significant potential as a liming agent because of its high alkalinity. Substances that can and have been neutralized with CKD include industrial acidic wastes such as spent pickle liquor, leather tanning wastes, and cotton seed delinting chemicals. CKD also has been used as an agricultural liming agent to treat acidic soils. In the mid-eighties, it was used as an agricultural lime on a regional basis in New York.[13,14]

---

[10] Zarlinski, S.J. and J.C. Evans, 1990. *Durability Testing of a Stabilized Petroleum Sludge.* Paper from Hazardous and Industrial Wastes, Proceedings of 22nd Mid-Atlantic Industrial Waste Conference. July 24-27. Pennsylvania.

[11] Morgan, David S., *et al.*, 1984. *op. cit.*

[12] Personal Communication with Marc Saffley, Soil Conservation Service (SCS), November 18, 1992.

[13] Naylor, L.M., J.C. Dagneau, and I.J. Kugelman, 1985. *CKD - A Resource Too Valuable to Waste?* Proceedings of the Seventeenth Mid-Atlantic Industrial Waste Conference on Industrial and Hazardous Wastes. June 23. pp. 353-366.

[14] Naylor, L.M., E.A. Seme, and T.J. Gallagher, 1986. *Using Industrial Wastes in Agriculture.* BioCycle. February. pp. 28-30.

4.4.4 Materials Additive

Approximately 2.7 percent of CKD used beneficially was used in 1990 for materials additive applications, where CKD is blended with cement either alone or with other additive materials and aggregates to make concrete. CKD also has been used as a mineral filler for bituminous paving materials and asphaltic roofing materials. In addition, glassmakers have used CKD in glass that does not have stringent color restrictions or requirements for chemical stability.

4.4.5 Road Base

Approximately 1.2 percent of the CKD used beneficially in 1990 was used for road base construction. CKD provides an economically attractive substitute for road base products such as fill materials and lime. Use of CKD for this purpose has, however, been limited thus far and the subject does not appear to have attracted much continuing attention.

4.4.6 Other Uses

About eight percent of the CKD used beneficially in 1990 was used in other uses (e.g., wet scrubbing and general undefined agricultural use).

CHAPTER FOUR

CURRENT MANAGEMENT PRACTICES FOR CKD

4.0 INTRODUCTION 1

4.1 ON-SITE LAND DISPOSAL 1

4.1.1 Landfills 2

4.1.2 Piles 2

4.1.3 Ponds 2

4.1.4 Dimensions 3

4.1.5 Codisposal 3

4.1.6 Remaining Useful Life 3

4.2 POTENTIAL EXPOSURE PATHWAYS 4

4.2.1 Ground Water 5

4.2.2 Surface Water 6

4.2.3 Air 6

4.3 ENVIRONMENTAL PROTECTION PRACTICES 7

4.4 BENEFICIAL USE OF CKD 9

4.4.1 Waste Stabilization 10

4.4.2 Soil Amendment (Fertilizer) 12

4.4.3 Liming Agent 12

4.4.4 Materials Additive 12

4.4.5 Road Base 13

4.4.6 Other Uses 13

LIST OF EXHIBITS

Exhibit 4-1 **1991 CKD Waste Management Unit Dimensions** 3

Exhibit 4-2 **Remaining Life of Waste Management Units** 4

Exhibit 4-3 **Typical Cement Plant Layout** 5

Exhibit 4-4 **Environmental Protection Practices at CKD Waste Management Units Active in 1990, by Kiln Fuel Use Type** 8

Exhibit 4-5 **Estimated Off-Site Uses for CKD Sold/Given Away** 11

CHAPTER FIVE

DOCUMENTED AND POTENTIAL DAMAGES FROM MANAGEMENT OF CKD

5.0 INTRODUCTION AND METHODOLOGY

Section 8002(o)(4) of RCRA requires that EPA's study of CKD waste examine "documented cases in which danger to human health or the environment has been proved." In order to address this requirement, EPA defined danger to human health or the environment in the following manner. First, danger to human health includes both acute and chronic effects (e.g., directly observed health effects such as elevated blood lead levels or loss of life) associated with management of CKD waste. Second, danger to the environment includes the following types of impacts:

(1) Significant impairment of natural resources (e.g., contamination of any current or potential source of drinking water, with contaminant concentrations exceeding drinking water and/or aquatic ecologic standards);

(2) Ecological effects resulting in degradation of the structure or function of natural ecosystems and habitats; and

(3) Effects on wildlife resulting in damage to terrestrial or aquatic fauna (e.g., reduction in species' diversity or density, or interference with reproduction).

This approach parallels that used in the previous RCRA §8002 studies prepared by the Agency.[1]

This section describes the approach the Agency has employed to address the §8002(o)(4) requirement, including the "tests of proof" and the methods used to identify potential cases, information on actual damage cases, and verification of the accuracy and completeness of the resulting case studies. In addition, this section provides a discussion of the limitations associated with interpreting the results obtained. Throughout the discussion, cases where damage to the environment has been proved are referred to as damage cases.

"Tests of Proof"

The statutory requirement is that EPA examine proven cases of danger to human health or the environment. Accordingly, EPA developed "tests of proof" to determine if documentation available on a case provides evidence that danger/damage has occurred. (These are the same criteria used in the Report to Congress on Special Wastes from Mineral Processing.) These "tests of proof" consist of three separate tests; a case that satisfies one or more of these tests is considered "prove." The tests are as follows:

- Scientific investigation. Damages are found to exist as part of the findings of a scientific study. Such studies should include both formal investigations supporting litigation or a state enforcement action, and the results of technical tests (such as

[1] See, for example, U.S. EPA, 1990. Report to Congress on Special Wastes from Mineral Processing. Office of Solid Waste. July.

monitoring of wells). Scientific studies must demonstrate that damages are significant in terms of impacts on human health or the environment. For example, information on contamination of a drinking water aquifer must indicate that contamination levels exceed drinking water standards.[2]

- Administrative ruling. Damages are found to exist through a formal administrative ruling, such as the conclusions of a site report by a field inspector, or through existence of an enforcement action that cited specific health or environmental damages.

- Court decision. Damages are found to exist through the ruling of a court or through an out-of-court settlement.

Identification of Prospective Damage Cases

EPA identified damage case sites by compiling a list of (1) currently operating cement manufacturing facilities and currently inactive or closed facilities that were active during the last 10 to 20 years based on industry and government sources (e.g., the Portland Cement Association and the U.S. Bureau of Mines); and (2) cement manufacturing facilities investigated under the Comprehensive Environmental Response, Compensation and Liability Act (CERCLA) and listed in EPA's CERCLIS data base. Additional facilities were identified during the information collection process described below when state or federal contacts indicated that these facilities should be considered. The initial search resulted in the identification of 127 active and inactive sites as a basis for searching records for documented damages. Some cases, though they did not meet the "tests of proof" were identified as "potential" damage cases because they showed evidence of on-site contamination, but lacked any information regarding whether or not contaminated media migrated off site.

Information Collection

In addition to gathering information from its regional offices, EPA contacted state, other federal, and local agencies to collect information. Telephone contacts were made with agencies in all states in which cement is currently produced. These agencies included state environmental regulatory agencies; state, regional, or local departments of health; and other agencies potentially knowledgeable about damages related to the management of CKD waste. EPA also contacted professional and trade associations, and public interest and citizens groups, seeking additional information and perspective on prospective damage cases.

The Agency then visited four states identified in the initial telephone screening to collect information about specific sites from state and local agency files. These four states (California, Missouri, South Carolina, and New York) account for 23 of the 127 sites investigated for potential documented damages. EPA selected the states to be visited based on (1) the type and extent of site-specific information available in the files (based on contacts with state and local personnel); and (2) the ability of the Agency to combine data collection activities with scheduled CKD sampling visits. Where feasible, information also was collected by mail from state and local agency personnel. EPA did not conduct file searches in all states in which CKD sampling visits

[2] We recognize that comparison of drinking water standards and constituent levels in groundwater is not routine. But because of the lack of benchmark standards for constituents in leachate, we believe it is a useful comparison.

occurred because, based on contacts with state and local government personnel, EPA determined that no relevant information was available in the files of some agencies.

During visits to the regulatory agencies in the four states described above EPA reviewed documentation on sites on the list of potential damage cases, and collected documentation on those cases that appeared to meet one or more of the "tests of proof." Follow-up contacts were also made with relevant agencies, groups, and individuals based upon initial information review.

Damage Case Preparation and Review

Following completion of the data collection efforts, EPA prepared detailed damage case study notes of the information obtained for documented damage case sites. These notes provide the basis for the discussions of damage case findings for CKD waste management that are covered in this report. The detailed damage case notes are available in the RCRA docket.

Limitations of the Damage Cases

The damage case findings that resulted from the process described above must be interpreted with care, for several reasons. First, CKD waste disposal sites are often co-located with limestone mining operations (e.g., active and exhausted quarries) that may also be used for storage of other cement manufacturing feedstocks (e.g., petroleum coke). Similarly, and more importantly, CKD waste is or has been co-managed with other wastes such as refractory brick at many sites. In such cases, it is often difficult to determine if the documented damages were caused by management of CKD waste, or if the stored raw material or co-managed waste may have caused or contributed to the observed damage. The sites included in this report are those for which available data indicate that the documented damages are attributable, in whole or in large part, to the management of CKD waste.

Second, the extent to which the findings can be used to draw conclusions concerning the relative performance of waste management practices among states is limited by variations in requirements and recordkeeping. For example, recordkeeping varies significantly among states. Some states have up-to-date central enforcement or monitoring records on cement manufacturing facilities within the state. Where states have such records, information on damages may be readily available.

More often, enforcement and monitoring records are incomplete and/or distributed throughout regional offices within the state. Data collection efforts generally were focused on the central office of the appropriate state agencies. In some instances, information may have been available at a state regional office that was not available in the central office.

The third reason for caution is that, because CKD waste is not regulated under Subtitle C of RCRA, many states do not specifically regulate the management of CKD at cement manufacturing facilities. As a result, monitoring and, thus, detection of problems at cement manufacturing facilities has occurred on a very limited basis, if at all, in some states. Therefore, while damages may have occurred in states that do not have an environmental monitoring or regulatory program specifically for CKD wastes, these damages could not be identified in this study.

Finally, because environmental contamination resulting from waste disposal practices often takes years to become evident, documented examples of danger that have resulted from

particular waste disposal practices may reflect conditions that no longer exist. Specifically, processing operations, waste characteristics, and/or waste management practices may have changed. As a result, damage cases associated with CKD waste do not necessarily demonstrate that current CKD waste management practices or regulations affecting CKD waste generation and management are in need of change. Conversely, failure of a site to exhibit documented damages at present does not necessarily suggest that past or current waste management practices have not or will not cause damage. The Agency believes, however, that information on dangers posed by past waste management practices is useful in understanding the potential for environmental and human health impacts when releases to the environment occur.

5.1 OVERVIEW OF FINDINGS, TRENDS, AND CONCLUSIONS

5.1.1. Findings

Using the methodology described above, EPA collected information regarding damages to human health and the environment at 115 cement plants that were active in the United States in 1990. EPA also investigated the possibility of damages at 12 additional sites, including abandoned (inactive) cement plants and inactive, off-site disposal areas, at which CKD has been disposed within the past 20 years.

Based on its investigation, the Agency compiled the following information concerning the recorded documentation alleging human health and/or environmental damages at these 127 sites:

Exhibit 5-1

Summary of Cases of Documented and Potential Damage to Human Health and/or Environmental

Number of Sites	Documented and Potential Damages
90	No allegations of damages.
15	Alleged damages: documentation insufficient to support a test of proof.
19	Information available to support at least one test of proof for damages. These are cases of documented damage to surface water and/or groundwater and/or air.
3	Information available to indicate that on-site surface water has been impacted, but there is no data to indicate that damaged media has impacted ground water or has migrated off site. These are cases of potential damage.

From its investigation of compliance with environmental regulations and CKD management and disposal practices at these sites, EPA was able to document damages to human health and/or the environment at 19 cement plants in the United States using the tests of proof described above. Three additional sites are classified as cases of potential damage, because there

is no substantial evidence the damaged media has migrated off site. Exhibit 5-2 presents a summary of EPA's findings at seven of the sites where there has been documented damage to surface water and/or ground water, including waste management practices at the time the damage occurred, the environmental media impaired, and the chemical constituents of concern in the affected media. They are among the 19 cases of documented damage identified above in Exhibit 5-1. Exhibit 5-3 presents the same information for the two cases of potential damage. The eight documented damages are described in more detail under Documented Ground and Surface Water Damage Case Summaries in Section 5.2 of this chapter. The two documented cases of potential damage are described after description of the eight cases of documented water damage in Section 5.3. Documented damages to air were found at 12 sites and are listed in Exhibit 5-17. Air damages are summarized in this chapter in Section 5.4.

5.1.2 Overall Trends and Conclusions

Damages the Agency has documented are in the form of exceedances of established constituent limits; no direct impacts on human health have been demonstrated during the conduct of this analysis. In cases where damages to surface and ground water from the management of CKD have been documented, there are exceedances of a Federal or State minimum concentration limits (MCLs) for constituents of drinking water, and/or exceedances of aquatic/ecologic MCLs for constituents of surface water. In the air damage cases, damages are exceedances of opacity limits adopted by States in compliance with the Clean Air Act.[3] In all damage cases the available data included no evaluation of or information on potential for actual human exposure to waste constituents. Waste management practices included disposal in unlined units: waste piles, abandoned quarries, or landfills; two of the 19 damage case facilities disposed of CKD in off-site units. These waste management practices are common at many sites across the country.

At five of the seven sites where documented water damages have occurred, both surface water and ground water have been affected as a direct result of past waste management practices. Typical concerns at these facilities include elevated pH, total dissolved solids, and sulfate above secondary MCLs in ground water and surface water, as well as elevated levels of toxic metals such as arsenic, cadmium, and lead above primary drinking water MCLs.

At the three sites where there are potential water damages, on-site surface waters have been impacted by the disposal of CKD, but there is no significant evidence that these waters have migrated off site. At one of these sites CKD is managed underwater in an inactive quarry.

In addition to the documented damages to both surface water and ground water, EPA identified 21 incidents of air damage at 12 facilities. Notices of Violation (NOVs) were issued for these incidents, with three cases eventually settled through a judicial settlement. Six of these facilities have received more than one NOV. With the exception of two cases associated with the accumulation of fugitive dust, all of the cases were associated with visible emission violations (opacity) related to equipment and process malfunctions associated with the dust management system.

---

[3] Opacity is an indirect measurement of the concentration of PM_{10}, the MCL of which is protective of human health. Althoug

There are several sites with waste management practices similar to those in the documented damage cases that the Agency has investigated under CERCLA. At these sites, the Agency either found no cause for further action under CERCLA, or recommended further action that has not yet occurred. However, further action under CERCLA is based on a ranking system which is weighted towards proximity to human population centers. Therefore, failure to investigate further may overlook the existence of ecologic damage and/or risk to small human populations.

Exhibit 5-2

Summary of Documented Water Damages

Site	Waste Management Practice	Damaged Media	Constituents of Concern (concentrations exceed MCLs)	Other Constituents of Concern (concentrations exceed background levels)
Holnam Incorporated, Mason City, Iowa	CKD formerly disposed in abandoned, unlined quarry partially filled with precipitation and ground water (water table rises into quarry). Currently (1990) recycles 100% of CKD.	Ground Water	elevated pH, TDS, Cl, Mg, SO_4, Cr	elevated Cl, K, Na, phenols
		Surface Water	elevated pH, TDS, Al, Cl, K, SO_4	elevated K, Na
Lehigh Portland Cement, Leeds, Alabama	CKD formerly disposed in unlined waste piles at edge of clay pit/quarry. Currently (1990) recycles 100% of CKD.	Surface Water	elevated pH, TDS	
Lehigh Portland Cement, Mason City, Iowa	CKD currently (1990) disposed in on-site, unlined waste piles at perimeter of abandoned quarry. CKD also formerly disposed in off-site, unlined waste piles at site currently used as Lime Creek Nature Center.	Ground Water	elevated pH, TDS, Al, As, Pb, SO_4	elevated K, Na
		Surface Water	elevated pH, TDS, As	elevated Ca, K, Zn
Portland Cement Company, Salt Lake City, Utah	CKD formerly disposed near by but in off-site, unlined waste piles with drainage ditch through site and surplus canal adjacent to site. Kiln currently inactive.	Surface Water	elevated pH, As, hexavalent Cr, Pb	elevated Mo
		Ground Water	elevated pH, TDS, As, Cd, F, Pb, SO_4	elevated K, Mo
		Soils		elevated Mo, Pb

Al = aluminum, As = arsenic, Cd = cadmium, Cl = chloride, Cr = chromium, Cu = copper, F = fluoride, Fe = iron, Pb = lead, Mn = manganese, Mo = molybdenum, Ni = nickel, K = potassium, Se = selenium, Na = sodium, SO_4 = sulfate, Tl = thallium, TDS = total dissolved solids, Zu = zinc

Exhibit 5-2 (continued)

Summary of Water Damages

Site	Waste Management Practice	Damaged Media	Constituents of Concern (concentrations exceed MCLs)	Other Constituents of Concern (concentrations exceed background levels)
Southdown, Inc., Fairborn, Ohio	CKD formerly disposed in on-site, unlined landfills. CKD currently stored in on-site silos prior to recycling. Excess CKD sold and shipped off site for an unknown purpose.	Surface Water Ground Water	elevated pH, As, Cd, Cr, Fe, Pb, Se elevated pH, As, Cd, Cr, Fe, Ni, Pb, Se	elevated Cu, Zn
National Gypsum Lafarge Corporation Alpena, Michigan	31+ hectares, inactive disposal site. National Gypsum formerly disposed of CKD on the shores of Lake Huron. CKD piled 18 meters above the lake level. On shore there are 9-meter high banks that are actively being undercut by wave action. Pile contains drums, buckets, air pollution control bags, and other debris which are all eroding into the lake.	Surface Water Soils	elevated As, Pb elevated As, Pb, Se, Zn	
Ash Grove Cement West, Inc. Montana City, Montana	Currently (1990) disposes of CKD by landfilling a draw on the east side of the active quarry. Surface run-off during storms flows into holding ponds for sediment removal before discharge into Prickly Pear Creek. Two catastrophic releases of CKD-bearing sludges from holding pond into creek.	Surface Water	elevated TDS	elevated Pb, Tl

Al = aluminum, As = arsenic, Cd = cadmium, Cl = chloride, Cr = chromium, Cu = copper, F = fluoride, Fe = iron, Pb = lead, Mn = manganese, Mo = molybdenum, Ni = nickel, K = potassium, Se = selenium, Na = sodium, SO_4 = sulfate, Tl = thallium, TDS = total dissolved solids, Zu = zinc

Exhibit 5-3

Cases of Potential Damage

Site	Waste Management Practice	Damaged Media	Constituents of Concern (concentrations exceed MCLs)
Texas Industries Midlothian, Texas	60% to 80% of CKD collected in ESP currently (1990) disposed in on-site landfill in a depleted quarry area. 20% to 40% used beneficially off site. CKD formerly disposed in unlined waste pile.	Surface Water	elevated pH, As, Cr, Pb
Holnam, Inc. Artesia, Mississippi	Currently (1990) disposes of non-waste derived CKD in water-filled quarry. Waste derived CKD disposed of in open pile with bermed boundaries.	Surface Water (quarry water, process water discharge into quarry)	elevated pH
Markey Machinery Property Seattle, Washington	Approximately 38,000 cubic meters of CKD was disposed off site on a parcel of land within the city limits of Seattle. Site is an old truck park located within 1,200 meters of a State fishery (Duwamish River) and has substantial nearby population.	Surface Water Ground Water Soils	elevated pH, Pb elevated Pb elevated As, Pb

As=arsenic, Cr=chromium, Pb=lead

5.2 DOCUMENTED GROUND AND SURFACE WATER DAMAGE CASE SUMMARIES

As described above, EPA contacted officials at local and state regulatory agencies and at EPA Regional offices in all states in which cement is produced to gather information documenting the environmental performance of waste management practices for CKD. In addition to interviewing these officials, EPA reviewed files obtained either through the mail or during visits to regulatory agencies. Through the above-described case studies, EPA found documented environmental damages of either ground or surface water associated with CKD management at the following seven facilities:

- Holnam Incorporated, Mason City, Iowa;
- Lehigh Portland Cement Company, Leeds, Alabama;
- Lehigh Portland Cement Company, Mason City, Iowa;
- Portland Cement Company, Salt Lake City, Utah; and
- Southwestern Portland Cement (Southdown, Inc.), Fairborn, Ohio.
- National Gypsum Co./Lafarge Corp., Alpena, Michigan
- Ash Grove Cement West, Inc., Montana City, Montana

EPA has also found cases of potential environmental damage at the following three facilities:

- Texas Industries, Inc., Midlothian, Texas
- Holnam, Inc., Artesia, Mississippi
- Markey Machinery Property, Seattle,Washington

Documented damages at these seven facilities are summarized below, followed by a summary of the three cases of potential damage in Section 5.3.

Cases of Documented Damage

5.2.1 Holnam Incorporated, Mason City, Iowa

The Holnam, Inc. facility (formerly Northwestern States Portland Cement Company) occupies 97 hectares (240 acres), and is located in Cerro Gordo County, Iowa adjacent to the northern boundary of a residential development in Mason City. The plant operates one long dry process kiln and manufactures Types I, II, and III Portland cements and masonry cement.[4]

The site is bordered to the west by a railroad right-of-way, to the north by the property line of the Lehigh Portland Cement Company, to the east by Highway 65 and to the south by streets bordering the residential areas of Mason City. Calmus Creek crosses the northwest portion of the property on its way to Winnebago Creek nearly 1 kilometer (0.62 miles) away. To the east and west are rural agricultural areas.

From 1969 to 1985, plant operators landfilled CKD waste into a large inactive quarry located on the western portion of the facility property. Known as West Quarry, the disposal site

[4] Portland Cement Association, 1991. PCA CKD Survey: Response from Holnam, Inc., Mason City, Iowa.

was originally 61 hectares in area and 12 meters (m) (39 feet) deep.[5] When disposal activities ceased in 1985, 73 percent of available quarry volume was filled with approximately 1.8 million metric tons (2.0 million tons) of kiln dust, and the open volume of the quarry (now known as West Quarry Pond) was reduced to approximately 16 hectares and was filled with approximately 1.59 million kiloliters (420 million gallons) of water.[6] An indeterminate amount of dust also was disposed in East Quarry, located east of Highway 65.[7] No record is available regarding CKD disposal prior to 1969. Exhibit 5-4 provides a diagram of the Holnam site.

Exhibit 5-4

Site Diagram – Holnam Incorporated, Mason City, Iowa

---

[5] Northwestern States Portland Cement Company, 1985. *Hydrogeologic Investigation - West Quarry Site, Northwestern States Portland Cement Company, Mason City, Iowa. Prepared by IT Corporation. July, 1985.*

[6] *Iowa Department of Natural Resources, 1990. Record of Decision for Northwestern States Portland Cement Company Site, Mason City, Iowa. June, 1990.*

[7] *Portland Cement Association, 1991. PCA CKD Survey: Response from Holnam, Inc., Mason City, Iowa.*

Holnam no longer wastes CKD at its Mason City, Iowa facility. The raw materials in the manufacturing process have been changed so that the kiln dust can be placed back into the product; the dust is 100 percent recycled.

There are two aquifers in the vicinity of the Holnam facility, both of which supply potable water to people living nearby. Mason City municipal wells and the high capacity wells of both Holnam and Lehigh Cement tap sandstones comprising the Jordan aquifer at depths greater than 370 meters. Wells also tap a shallower limestone and dolomite aquifer located within 90 meters of the surface, which supplies the drinking and industrial needs of both facilities. The shallower limestone and dolomite aquifer also supplies the drinking water needs of about 300 residents in a subdivision (Winnebago Heights) located two kilometers north of the site.

Five municipal and five industrial water wells are located within 1.6 kilometers of West Quarry Pond. The municipal wells, located southeast of West Quarry, help supply drinking water to the Mason City public supply system, which serves over 30,000 people. Most residences in the vicinity of Holnam draw water from the municipal water wells. Some of these residences also have shallow private wells used for gardening and other outdoor activities.[8] Of the five industrial wells, two are owned by Holnam and are located on site; two are owned by Lehigh Portland Cement Company, and are located on Lehigh property north of the Holnam facility; and one is owned by the American Crystal Sugar Company, and located to the north within one mile of West Quarry Pond.

In April, 1974, a change in color in the quarry water prompted Northwestern States personnel to initiate a pH monitoring program in the West Quarry. From April 1974 to January 1976, the pH level in the water increased from 8.0 to 8.7. By April, 1976, the pH level had increased sharply to 11.8, and reached 12.8 in late 1980. The Iowa Department of Natural Resources attributed the increase in pH to a collapse of the natural buffering system that was sustaining the quarry water at a near-neutral pH. A quarry dewatering program, initiated in 1987, which reduced the water level in the West Quarry Pond from 12 to 4.6 meters, succeeded in lowering the pH level to 10.6 by 1990.[9]

Also, a report on the water quality of Calmus Creek prepared by the University of Iowa in 1984, describes a blowout, or seep on the northeast side of the West Quarry. Water from this seep, before merging with Calmus Creek, was observed to have a high pH (11.3) and elevated levels of several constituents, including sulfate (1,700 mg/L), sodium (1,280 mg/L), potassium (2,400 mg/L), and phenol (230 μg/L) relative to Calmus Creek (pH: 7.7-8.0, sulfate: 32-44 mg/L, sodium: 4.7-6.6 mg/L, potassium: 2.8-5.0 mg/L, phenol: 2-4 μg/L).[10] Benthic populations of aquatic animals were reported to be non-existent downstream, with very little spawning activity within the affected reach of Calmus Creek. Immediately downstream of the blowout, water in Calmus Creek showed an increase in turbidity (from 20 Natural Turbidity Units (NTUs) to 50 NTUs downstream) and elevated levels of sulfate (65 mg/L) and potassium

---

[8] *U.S. Department of Health and Human Services, 1991. Health Assessment for Northwestern States Portland Cement Company, Mason City, Cerro Gordo County, Iowa. December, 1991.*

[9] *Ibid.*

[10] *University of Iowa, 1984. Calmus Creek Water Quality Study. Report 85-1.*

(47 mg/L) relative to sampling sites upstream of the blowout.[11] In April 1985, the State ordered the facility to cease discharges from the seep area to Calmus Creek. At the same time, the facility was ordered to stop disposal of CKD in the quarry and to conduct a hydrogeologic investigation.[12]

In 1985, a hydrologic investigation of the West Quarry site prepared for Northwestern States Portland Cement Company showed waste kiln dust to be the original source of contamination at the site. Reported analyses of waste kiln dust show high levels of magnesium (4,000-5,000 mg/kg), potassium (4,400-13,000 mg/kg), and sulfur (4,100 mg/kg). A 10 percent slurry mixture of water and kiln dust produced a solution with a high pH (11.8-12.4).[13]

The report concluded that water from the West Quarry was also a source of contamination. Samples were characterized by a high pH (>12.0), as well as high concentrations of Total Dissolved Solids (1,800-13,000 mg/L), potassium (430-2,300 mg/L), sodium (48-250 mg/L), chloride (36-130 mg/L), and sulfate 320-3,030 mg/L). Concentrations of chromium (0.06-0.33 mg/L) also exceeded the Federal primary drinking water standard (0.015 mg/L).[14]

The investigation noted that water in the West Quarry is hydrogeologically connected with the surrounding ground water and, as a result, there is potential for migration of the contaminants in the ground water. Water sampled in wells placed between the West Quarry and Calmus Creek showed elevated pH levels (10.3-13.1) that decreased with depth. Also, levels of TDS (6,700-30,000 mg/L), aluminum (1.5-48 mg/L), potassium (1,100-3,900 mg/L), sodium (170-620 mg/L), chloride (71-470 mg/L), and sulfate (160-2,500 mg/L) were generally similar to levels observed in water in the West Quarry. Levels of these constituents in water sampled from background wells were considerably lower (pH: 6.8-7.4, TDS: 900-1,800 mg/L, aluminum: 1.5-4.5 mg/L, potassium: 2.4-3.0 mg/L, sodium: 21-22 mg/L, chloride: 26-65 mg/L, sulfate: 76-380 mg/L).[15]

The facility installed an acid-neutralization system in June 1987, adjacent to Calmus Creek in the northwestern portion of the filled West Quarry. In addition to treating the seep water, the system was used to dewater of the West Quarry Pond. The treated water is discharged to Calmus Creek in accordance with a NPDES permit issued by the Iowa Department of Natural Resources. These actions taken by the facility have eliminated untreated discharges from the West Quarry to Calmus Creek. However, discharge of water from the acid-neutralization facility still poses potential water quality problems in Calmus Creek due to elevated levels of total dissolved solids and phenols.[16]

---

[11] *Ibid.*

[12] *Ibid.*

[13] *Northwestern States Portland Cement Company, 1985. Hydrologic Investigation of the West Quarry Site, Northwestern States Portland Cement Co., Mason City, Iowa. Prepared by IT Corporation. July.*

[14] *Ibid.*

[15] *Ibid.*

[16] *Northwestern States Portland Cement Company, 1989. Remedial Investigation/Feasibility Study on the West Quarry, Mason City, Iowa. Prepared by Layne Geosciences, Inc. Project No. 61.1099.*

In May 1985, the facility installed two ground-water extraction wells in the vicinity of the seeps to control the discharge to Calmus Creek. The water that was collected by the wells was circulated back into West Quarry Pond.[17]

The site currently has a series of 16 monitoring wells. Analytical results of ground water discharging to Calmus Creek from sampling conducted in 1988, as part of EPA's Field Investigation Team (FIT) investigation, revealed a pH of 13.1 and sulfate and phenols concentrations of 1,500 mg/L, and 0.16 mg/L, respectively. Both pH and sulfate levels exceed national secondary drinking water standards.

On August 30, 1990, the Holnam site was listed on the National Priorities List. In its June 1990 Superfund Record of Decision, the Iowa Department of Natural Resources summarized the major concerns at the site as contaminated surface water and ground water. The primary problems have been sharp increases in pH and mineral deposition in on-site ground water and nearby surface water as a result of contact with waste CKD in the West Quarry.[18]

In the June 1990 Record of Decision for this site, the Iowa Department of Natural Resources determined that the selected remedy for the site would include the following actions to control and remediate existing ground-water contamination and to reduce the potential for future contamination of ground water and surface water:

- Dewatering of the West Quarry (completed in September 1989);
- Construction of a permanent drain system in the dewatered West Quarry to collect precipitation run-off and ground-water inflow to the quarry;
- Placement of an engineered clay cap over the area of the West Quarry filled with CKD to minimize infiltration through the kiln dust;
- Installation of bedrock extraction wells to collect contaminated ground water beneath the West Quarry, prevent migration of contaminated ground water from the site, and maintain ground-water levels below the CKD;
- Installation of kiln dust dewatering wells, if necessary; and
- Treatment of contaminated waters to meet Iowa NPDES discharge permit limits for discharge to Calmus Creek.

The initial remedial actions taken at this facility, dewatering of the West Quarry Pond, and neutralization of pond water, have proved to have some positive impact. However, according to the Superfund Record of Decision, additional remedial actions are still necessary to reduce the potential risk of future contamination. These include construction of a permanent drain, placement of a clay cap over the quarry, and installation of bedrock extraction wells.

---

[17] *Ibid.*

[18] *Iowa Department of Natural Resources, 1990. Record of Decision for the Northwestern States Portland Cement Company Site, Mason City, Iowa. June, 1990.*

The disposal of CKD in unlined, abandoned quarries is a common waste management practice utilized at cement plants. Damages at this site resulting from this disposal practice consist of impairment of Calmus Creek from the overland flow of high pH water from West Quarry Pond, and ground-water discharges to the creek. These discharges have elevated the pH of the stream above the State's water quality standard. This damage has been documented in several studies, the most recent being conducted in 1989. On-site ground-water contamination also has been identified at this site. The contaminants of concern include pH, total dissolved solids, potassium, sulfate, and phenols. These constituents have been observed at levels that exceed primary and secondary drinking water standards.

5.2.2 Lehigh Portland Cement Company, Leeds, Alabama

Lehigh Portland Cement Company's Leeds plant is located in Jefferson County, approximately 24 kilometers (km) (15 miles) east of Birmingham, Alabama. The plant has operated a single dry-process kiln at the site since 1976 and manufactures Types I, II, and III Portland cement and masonry cement. In 1990, the facility utilized coal for 96 percent of its fuel needs, and natural gas for the remaining four percent. The plant currently recycles all of its CKD; there is no land disposal of CKD either on or off site.[19]

The entire plant encompasses 270 hectares (668 acres) and is located within a 100-year floodplain with karst topography and faulted bedrock. The population within a 2 km radius of the plant was 7,000 in 1990, and the nearest residence is 91 meters (m) (300 feet) to the northwest of the plant's boundary. No public or private drinking water wells exist within two kilometers of the plant.[20]

Prior to 1978, the previous owners of the facility, the Atlas Cement Company and U.S. Steel, disposed of an undetermined portion of its waste CKD in two on-site piles. These piles lie within 150 meters of the plant's limestone quarry, which is located to the south of the plant's kiln.[21] Neither the State of Alabama nor Lehigh personnel know the total amount of CKD disposed in the piles, or if any material is co-disposed with the dust. One of these piles is currently seeded with grass.

Both waste CKD piles drain into a sedimentation pond, the water from which is pumped uphill and dispersed as a spray in a grove of pine trees. Run-off from the spray flows downslope away from Moores Creek, the natural drainage channel located south of Lehigh's limestone/clay quarry. Moores Creek receives stormwater run-off from the plant property through five NPDES outfalls.[22] The site layout is shown in Exhibit 5-5.

During the 1980s, the Alabama Department of Environmental Management's (ADEM) Water Division observed two incidents of elevated pH in Moores Creek caused by storm-water

---

[19] *Portland Cement Association, 1991. PCA CKD Survey: Response from Lehigh Portland Cement Company, Leeds, Alabama.*

[20] *Ibid.*

[21] *Lehigh Portland Cement Company, 1993. Personal communication with Charlie Klotz, Safety Training, and Environmental Manager, Leeds, Alabama facility.*

[22] *Lehigh Portland Cement Company, Leeds, Alabama, 1993. Personal communication with Charlie Klotz, op.cit.*

run-off from both dust piles and the plant proper. In April 1984, ADEM issued a NOV to Lehigh Portland Cement for violations of the Water Division's regulations.[23] In February 1987, ADEM issued a Notice of

[23] *Alabama Department of Environmental Management, 1984. Letter from H.H. Beiro, Pollution Control Specialist, to M.F. McCarthy, Lehigh Portland Cement Co., Leeds, Alabama. April 19, 1984.*

Exhibit 5-5

Site Diagram – Lehigh Portland Cement Company, Leeds, Alabama

Noncompliance for exceedances of limits for pH and total suspended solids (TSS) specified in the facility's NPDES permit during the fourth quarter of 1986.[24]

In the April 1984 NOV to Lehigh, ADEM noted that surface run-off from the facility's waste CKD stockpiles had elevated the pH of Moore's Creek, the receiving stream, from a level of 6.9 upstream of the plant to a level of 9.5 downstream of the plant, constituting a violation of the State's Water Quality Standard for pH in the stream of 8.5. In response, Lehigh Portland collected seven samples in May 1984, at the stream's "low flow" from various points on Moore's Creek (both upstream and downstream of the plant), and at the base of one of the dust piles.[25] Samples collected above and below Outfall #003 (located at the southern end of the limestone/clay quarry) yielded pH levels of 9.12 and 8.84, respectively. Lehigh Portland stated in

---

[24] *Alabama Department of Environmental Management, 1987. Notice of Noncompliance from S. Jenkins to M. McCarthy, Lehigh Portland Cement Company. February 3, 1987.*

[25] *Lehigh Portland Cement Company, 1984. Letter from R. Gebhardt to H. Beiro, ADEM. May 30, 1984.*

a letter to ADEM accompanying the sampling results, that "areas of the old, consolidated kiln dust piles that look like water courses are not; no water runs down them even during very heavy rains"; however, the facility offered no explanation for the elevated pH levels in the stream.[26]

Lehigh Portland initiated several ADEM-approved pollution abatement measures[27] in an attempt to control run-off into Moores Creek. In 1986, Lehigh Portland installed diversion ditches and an unlined sedimentation pond to the south of the clay pit and the dust piles, to allow settling of CKD in run-off from the piles prior to its discharge to Moores Creek through Outfall #006.[28] Lehigh Portland also seeded the dust piles with grass in the summer and fall of 1986 in an effort to control run-off.

Lehigh Portland's Leeds facility was again cited by ADEM in February, 1987, for violations of its NPDES permit.[29] The violations consisted of three exceedances of the pH limit of 9.0 for Outfall 006 during the fourth quarter of 1986 (measured pH: 9.2-10.0), and an exceedance of the daily average total suspended solids limit for the same outfall (25 mg/L) measuring 112.5 mg/L. During the first quarter of 1987, the daily average TSS for Outfall 006 exceeded the permit limit of 25 mg/L for each month (January: 88 mg/L, February: 58 mg/L, March: 51.5 mg/L).[30]

By May 1987, after determining that vegetation alone would not sufficiently control the run-off, Lehigh Portland sealed the discharge pipe from the sedimentation pond to Outfall 006 to prevent further discharge to Moore's Creek.[31] The plant also installed a pump and spray system to recirculate the water from the sedimentation pond away from Moores Creek. An emergency spillway to Moore's Creek was retained in the event of emergency overflow. According to the ADEM's Water Division, no additional violations or noncompliance with permit conditions have been observed, as determined through the Division's review of the plant's Discharge Monitoring Reports (the Division does not regularly inspect or monitor discharges at this facility). In addition, no ground-water contamination below the sedimentation pond has been observed.[32,33]

---

[26] *Ibid.*

[27] *Alabama Department of Environmental Management, 1985. Letter from Kirk S. Kreamer, ADEM, to A.P. Mahatekar, AmTech Services, Inc., August 21, 1985.*

[28] *Amtech Services, Inc., 1986. Letter from M. Holder, Professional Engineer, AmTech Services, Inc. to P. Prysey, ADEM. July 24, 1986.*

[29] *Alabama Department of Environmental Management, 1987. Notice of Noncompliance from S. Jenkins to M.F. McCarthy, Lehigh Portland Cement Co., Leeds, Alabama. February 3, 1987.*

[30] *Alabama Department of Environmental Management, 1987. DMR Violation Report, Ist Qtr. 1987, for Lehigh Portland Cement Co., Leeds, Alabama.*

[31] *Lehigh Portland Cement Company, 1987. Letter from L. Copple to S. Jenkins, Alabama Department of Environmental Management. February 20, 1987.*

[32] *Alabama Department of Environmental Management, 1992. Personal communication with S. Jenkins. January, 1992.*

[33] *Alabama Department of Environmental Management, 1992. Personal communication with C. McRoy. October, 1992.*

Damage at this site consists of the impairment of the water quality of Moore's Creek through the discharge of run-off from inactive CKD disposal piles. The discharge elevated the pH of the stream to levels exceeding the State's designated water quality standard for the stream; the discharge also exceeded the discharge limit for pH specified in the facility's NPDES permit. This was documented on two separate occasions during the 1980s, a period in which the CKD waste piles were inactive. The initial remedial action taken by Lehigh Portland, vegetating the piles and installing a sedimentation pond to extract CKD from the discharge, proved ineffective as demonstrated by the noncompliance with the NPDES-permitted discharge limits. The final remedial action, eliminating discharge through the outfall, has been effective to date.[34]

5.2.3 Lehigh Portland Cement Company, Mason City, Iowa

The Lehigh Portland Cement Company (LPCC) site, in operation since 1911, is located at 700 25th Street Northwest, on the north side of Mason City, Cerro Gordo County, Iowa. The facility operates one kiln, and manufactures Types I and III Portland cement.[35]

The site covers approximately 61 hectares (150 acres) and is bordered on the south by Calmus Creek (a tributary of the Winnebago River), and on the east by U.S. Highway 65. The facility is located in an urban area and a small residential neighborhood is located approximately 2.4 kilometers (km) (1.5 miles) to the north. The Lime Creek Nature Center (LCNC) is approximately 1.6 km northeast of the site. The plant is located within the 100-year floodplain. The Northwestern States Portland Cement Company site (now owned by Holnam, Inc.) is immediately south of the Lehigh site. Calmus Creek flows between these two sites to the Winnebago River, which is located approximately 450 meters (m) (1,476 feet) north and east of the two facilities.[36]

The LCNC, although separate from the plant area, has been the site of past disposal of CKD by the Lehigh Portland Cement Company. The LCNC covers 247 hectares and is owned by the County of Cerro Gordo and operated as an outdoor recreation area. It was opened to the public in May 1984. Portions of the current LCNC were formerly owned by Lehigh Portland Cement Company. The property was transferred to Cerro Gordo County in 1979.[37]

In 1990, Lehigh Portland, utilizing normal fossil fuels (85 percent coal, 8 percent natural gas, 7 percent coke), generated approximately 171,984 metric tons (189,577 tons) of CKD, of which 162,789 metric tons (95 percent) was recycled and used as raw material in the kiln. An estimated 8,620 metric tons of wasted CKD were landfilled in a clay quarry. This landfill first began receiving CKD waste in 1986.[38]

---

[34] *EPA has also promulgated rules that will require control of surface run-off; thus, if implemented, these regulations should prevent similar types of violations in the future.*

[35] *U.S. Environmental Protection Agency, 1991. Record of Decision: Lehigh Portland Cement, Mason City, Iowa. Prepared by the Office of Emergency and Remedial Response. June, 1991.*

[36] *Ibid.*

[37] *Ibid.*

[38] *Portland Cement Association, 1991. PCA CKD Survey: Response from Lehigh Portland Cement Company, Mason City, Iowa.*

Prior to disposal in the current landfill, Lehigh Portland deposited CKD in locations throughout facility property, including an exhausted quarry north of the plant (now known as the CKD Reclamation Area), as well as other on-site inactive quarry areas (now partially re-filled with water) located northeast of the plant proper, including Area "C" Pond, Arch Pond, Blue Waters Pond, and West Quarry Pond. Prior to 1979, when Lehigh Portland owned the LCNC property, plant operators also disposed of waste CKD in an abandoned quarry on the west side of the property (now water-filled and known as Quarry Pond), and in a 16 hectare site located along the west bank of the Winnebago River, known as the "Badlands". The actual amount of CKD disposed of on site may exceed 900,000 metric tons.[39,40] CKD disposal areas and plant operations are shown in Exhibits 5-6 (CPCC site) and 5-7 (LCNC site).

Exhibit 5-6

Site Diagram – Lehigh Portland Cement Company, Mason City, Iowa

[39] *U.S. Environmental Protection Agency, 1988. Final Report Site Investigation: Lehigh Portland Cement Company, Mason City, Iowa. Prepared by Ecology and Environment Field Investigation Team for Region VII. March, 1988.*

[40] *U.S EPA, 1991. Record of Decision: Lehigh Portland Cement, IA. op.cit.*

Exhibit 5-7

Site Diagram – Lime Creek Nature Center (Lehigh Portland Cement), Mason City, Iowa

The LPCC site was placed on the National Priorities List (NPL) on August 30, 1990. In litigation, Lehigh identified a number of concerns regarding the hazard ranking score. After reviewing the issues regarding the calculation of the score on the hazard ranking system, the Agency decided not to contest Lehigh's challenge to the listing decision. The listing was vacated by mutual consent in October 1992. Removal of that site from the NPL does not affect clean-up at the site.

There are two aquifers in the vicinity of the Lehigh Portland facility, both of which supply potable water to people living nearby. Wells serving the population of Mason City tap a sandstone aquifer greater than 370 meters in depth. Lehigh Portland, as well as the adjacent Holnam facility, utilize a shallower limestone and dolomite aquifer located within 90 meters of the surface. This aquifer supplies the drinking and industrial needs of both facilities. In addition, it supplies the drinking water needs of about 300 residents in a subdivision located north of the site. In 1987, EPA Field Investigation Team (FIT) personnel at Lehigh Portland observed shallow (1-3 meter depth) static water levels in pre-existing on-site ground-water

monitoring wells.[41] Quarry floors are below this depth, hence any CKD waste disposed in them was likely deposited directly into the shallow (1-90 meter) aquifer.

Problems with the site were first identified in 1981 during a routine hydrochemical test of Blue Waters Pond, one of four water-filled abandoned quarries on Lehigh property. The results of the test indicated that the pond water was alkaline (pH: 10.6) and exceeded the State standard (pH: 9.0) for discharge into warm water streams.[42] At this time, Lehigh had installed an overflow control structure at the southeastern corner of Blue Waters Pond. The flow control structure allowed water from the pond to be discharged directly to Calmus Creek to eliminate possible back-flooding of critical equipment.[43]

Lehigh hired an independent consulting firm to determine the source of the high pH waters. Twenty-eight surface water samples from various locations were collected and analyzed. The results of the report identified three potential sources, of which Arch Pond contributed the most significant quantities of high pH water to Blue Waters Pond. As a result, the facility transferred the water from Blue Waters Pond to the Area "C" Pond and retained the water behind two earthen dikes. These dikes have since failed due to high rainfall.[44]

In August 1984, the State of Iowa conducted a Comprehensive Work/Quality Assurance project on Calmus Creek, which is located approximately 300 meters south and downgradient of Blue Waters Pond. This investigation found that surface water contamination was directly related to the Lehigh facility as a result of discharges from the pond into the creek via a tile drain outlet southeast of the plant. The discharged water had a pH of 11.4, and total dissolved solids of 4,700 mg/L, including 2,000 mg/L potassium and 829 mg/L sulfates. The investigation also determined that the Arch Pond immediately west of the Blue Waters Pond could also contribute an unknown quantity of run-off from the western half of the plant to Calmus Creek.[45]

The study concluded that the biological quality of Calmus Creek had deteriorated as a result of effluent discharges from the Lehigh plant and the Holnam facility site located to the south. The study stated that because of the deterioration of the chemical balance in Calmus Creek and the quarry ponds, the number and variety of fish and benthic organisms were found to be substantially reduced downstream of the tile drain. As a result of this study, Lehigh was required to eliminate the discharge into Calmus Creek.[46]

---

[41] *U.S. Environmental Protection Agency, 1988. Final Report, Site Investigation, Lehigh Portland Cement, Mason City, Iowa. op.cit.*

[42] *Lehigh Portland Cement, 1989. Site Investigation Protocol for the Lehigh Portland Cement Company Plant, Mason City, Iowa. Prepared for Lehigh Portland by Layne GeoSciences, Inc. October, 1989.*

[43] *Ibid.*

[44] *Ibid.*

[45] *Iowa Department of Water, Air and Waste Management, 1984. Calmus Creek Water Quality Study, May-August, 1984.*

[46] *U.S. EPA, 1991. Record of Decision: Lehigh Portland Cement, IA. op.cit.*

Subsequently, at some unknown time, dikes were constructed to separate Arch Pond, the Area "C" Pond, and Blue Waters Pond, and an aboveground piping system was installed to pump water from Blue Waters Pond into the Area "C" Pond. Lehigh also constructed a lined ditch to channel the surface water run-off collected by the drain system from the adjacent highway back into the tile drain located southeast of Blue Waters Pond. The long-term goal of this effort was to eliminate Blue Waters Pond by backfilling and regrading the area.

An EPA site investigation conducted in April 1987 confirmed that the on-site quarry ponds and shallow ground-water table are contaminated locally and that contaminants have the potential to migrate off site to Calmus Creek and the Winnebago River. Seepage has occurred from the quarry ponds and is contaminating the ground water. The FIT investigation concluded that contamination could occur during high intensity rainfall events, leading to ground-water infiltration and flooding, and that the potential exists for human and biological exposures to the hazards present at the site.[47]

Surface water samples taken from each of the on-site quarry ponds (Blue Waters, Arch and Area "C" ponds), which contain disposed CKD, showed elevated levels of pH, metals, potassium, sodium, and sulfate relative to samples taken from Calmus Creek and the Winnebago River. Levels of total aluminum (0.82-1.8 mg/L), total sodium (28.0-180.0 mg/L), and total potassium (120.0-290.0 mg/L) in samples from the ponds were nearly ten times greater than levels of the same compounds found in samples taken from Calmus Creek (aluminum: 0.15 mg/L, sodium: 7.2 mg/L, potassium: undetected) and the Winnebago River (aluminum: 0.12 mg/L, sodium: 0.92 mg/L, potassium: 0.77 mg/L). Sulfate concentrations in the same ponds ranged from 270 mg/L to 1,160 mg/L and were as much as 34 times background levels in the creek and river (34.0-47.0 mg/L). Except for West Quarry Pond (pH: 8.52), which showed a pH close to levels found in Calmus Creek (pH: 7.84), and the Winnebago River (pH: 8.49), values of pH in pond waters were uniformly high (pH: 11.19-11.23). Arsenic was detected in waters from Arch Pond (0.051 mg/L) at about the same level as the Federal drinking water standard (0.05 mg/L), while lead was detected in the duplicate sample from Blue Waters Pond (0.038 mg/L) at a level 2.5 times the Federal drinking water standard (0.015 mg/L).[48]

The sample from the tile drain outlet into Calmus Creek, which drains Blue Waters Pond, had a pH value close to background (7.90), and had no detectable levels of arsenic or lead. Levels of potassium (19.0 mg/L), sodium (11.0 mg/L), and sulfate (63.5 mg/L), however, were elevated above background levels in Calmus Creek and the Winnebago River.[49]

Three pre-existing water wells, which are used to monitor ground-water flow and chemistry, were sampled during the EPA site investigation. These wells are located between the Area "C" Pond and Blue Waters Pond (MW #2), between the Arch Pond and Blue Waters Pond (MW #3), and hydrologically downgradient from Blue Waters Pond, between the pond and the Winnebago River at the eastern facility boundary (MW-#1). All three wells are less than 20 meters deep (MW #1: 19.1 meters, MW #2: 12.8 meters, MW #3: 9.1 meters) and penetrate the shallow ground-water table (static water levels: 1.2-2.7 meters below ground level). Samples

---

[47] *U.S. EPA, 1988. Final Report, Site Investigation, Lehigh Portland Cement, Iowa. op.cit.*

[48] *Ibid.*

[49] *Ibid.*

collected from wells MW #2 and MW #3 had elevated levels of pH (11.06, 12.04 respectively), above the national secondary drinking water standard (9.5). In addition, arsenic was present in well MW #3 at a concentration (dissolved 0.072 mg/L) 1.4 times the Federal drinking water standard (0.05 mg/L). Zinc was found in MW #3 at levels five to six times background concentration, but below Federal drinking water standards. MW #1 had a pH close to background levels (pH: 7.9), however levels of calcium (130 mg/L) and potassium (1.9 mg/L) were elevated relative to upgradient wells MW #2 and MW #3. One deep on-site Lehigh drinking water well was also sampled. This well did not exhibit concentrations of constituents above primary or secondary MCLs.[50]

In 1989, Lehigh hired Layne GeoSciences to perform the Remedial Investigation/Feasibility Study for the site. Nine monitoring wells were installed on the site, one being a nested well. The first of four sampling rounds was conducted in June 1990. Elevated pH values, total dissolved solids, and similar contaminants as prior studies were found in the ground water and surface water. The pH levels ranged from background to as high as 11.43 in one well. Total dissolved solids in this well were also as high as 7,000 mg/L. The pH levels in the on-site ponds were higher than previously detected (13.0 in Arch Pond), with TDS levels at 11,000 mg/L.[51]

In the fall of 1990, it was also determined by the Iowa Department of Natural Resources that the LCNC needed to be investigated for the same contaminants as the Lehigh site. As with the Lehigh site, the primary concerns in the LCNC area include elevated pH and TDS levels. The CKD samples that were collected showed high values for extractable and final pH (11 - 12.7). Elevated pH levels were detected in the Quarry Pond (9.5) and one monitoring well (#14, pH: 10.4). This high pH was not found in the LCNC water well, which is assumed to be downgradient of the CKD deposits.

There are two specific contamination concerns at the LCNC site:

- Elevated ground-water pH beneath the Badlands area; and
- Elevated ground-water pH and TDS levels in the Quarry Pond.

Local ground water and surface water have been affected at this site by high pH levels, an increase in total dissolved solids content, and elevated concentrations of potassium, sulfate, and sodium. These constituents have been monitored at levels that exceed national drinking water standards. In addition, ground-water contamination is evident beneath the Lime Creek Nature Center, a past off-site disposal area for CKD. These damages have been documented in several studies, and the situation has not changed significantly since 1989.

5.2.4 Portland Cement Company, Salt Lake City, Utah

From 1965 to 1983, the Portland Cement Company of Utah (PCU) disposed of CKD at five sites in and around Salt Lake City, Utah. The largest of these sites, designated as Portland Cement Co. site numbers two and three (Kiln Dust #2 & #3), is estimated to be 29 hectares (71

---

[50] *Ibid.*

[51] *Lehigh Portland Cement Company, 1991. Remedial Investigation/Feasibility Study for the Lehigh Portland Cement Company Plant, Mason City, Iowa. Prepared by Layne GeoSciences, Inc. April, 1991.*

acres) in area and is listed on the NPL. Lone Star Industries purchased PCU in 1979, and has been identified by the EPA and the Utah Department of Environmental Quality (UDEQ) as one of several Potentially Responsible Parties.[52,53]

The Kiln Dust #2 & #3 site is located in Salt Lake City approximately 2.5 kilometers (km) (1.6 miles) southeast of the Utah International Airport, and 1.6 kilometers south of Interstate 80. The site consists of three adjacent CKD disposal areas, site #2, site #3, and the West Site. The property is bounded on the north and east by city streets, and on the south and west by the Jordan River Surplus Canal.[54]

Land use in the vicinity of the site is characterized by mixed residential and commercial development. The immediate area surrounding the site is zoned for commercial and light industrial use. East of the site are residential areas. Vacant areas or agricultural lands are common in the surrounding area. The EPA, in the 1990 Record of Decision, estimates between 6,000 and 12,000 people live within one mile of the site.[55] Exhibit 5-8 provides a diagram of the site.

Between 1965 and December 1983, approximately 378,700 cubic meters (m^3) (495,718 cubic yards) of CKD was disposed in site #2, site #3, and the West Site, by PCU and/or Lone Star Industries. The waste CKD was disposed of as a slurry on site 2, while on site 3 it was disposed of in dry form. Within the boundaries of site #2, site #3 and the West Site, CKD is present in thicknesses ranging from one meter to more than two meters (m) (3.3-6.6 feet).[56] Co-disposed with the CKD is 327 metric tons (360 tons) of chromium brick. At the West Site, CKD is mixed in discontinuous layers with an indeterminate amount of industrial debris, including rubble, soils, scrap iron, concrete slabs, asphalt, common bricks, alumina kiln bricks, and common trash.[57]

Two drainage features pass through or are adjacent to the site. A drainage ditch, known as the City Drain, flows through the site, carrying urban storm run-off in a northwesterly direction. The Jordan River Surplus Canal carries water from the Jordan River northwestward to the Great Salt Lake. The City Drain is part of an urban storm sewer system and the water it

---

[52] *U.S. Environmental Protection Agency, Region VIII, and Utah Department of Health and Environmental Quality, 1990. Declaration for the Record of Decision, Portland Cement Company (Kiln Dust #2 & #3), Operable Unit 1, Salt Lake City, Utah. July, 1990.*

[53] *United States Bankruptcy Court, Southern District of New York, 1991. Proof of Claim of the State of Utah Department of Environmental Quality, Case No. 90-B-21277, in reference to New York Trap Rock Corporation, Lone Star Industries, Inc. et.al., Debtors.*

[54] *U.S. EPA and UDEQ, 1990. Declaration for the Record of Decision, Portland Cement Company, Salt Lake City Utah. op.cit.*

[55] *Ibid.*

[56] *Ibid.*

[57] *Ibid.*

carries is protected by the State of Utah. The water in the Surplus Canal is protected by the State of Utah for nongame fish, water-oriented wildlife, and agricultural uses.[58]

[58] *Ibid.*

Exhibit 5-8

Site Diagram – Portland Cement Company, Salt Lake City, Utah

Near-surface ground water underneath the site is characterized by a shallow, unconfined ground-water body, and local, perched water bodies. Both of these water bodies are above a deeper confined aquifer, which is the principal source of ground water in Salt Lake Valley. Although the local gradient of the shallow aquifer is generally to the northeast, toward the Jordan River, it is strongly influenced by the Jordan River Surplus Canal, the City Drain, and an underground sewer drain along the west side of CKD disposal areas #2 and #3.[59]

The 1990 EPA Record of Decision summarizes the results of several studies of the Kiln Dust #2 and #3 CKD disposal site. Disposed kiln dust contains the elements arsenic (3.0-27 mg/kg), cadmium (2.1-5.5 mg/kg), chromium (8.7-28 mg/kg), lead (90-1,274 mg/kg), and molybdenum (8.7-51.7). Of these, concentrations of molybdenum and lead are generally above those found in typical soils of the western United States (molybdenum: 3-7 mg/kg, lead: 10-700

[59] *U.S. EPA and UDEQ, 1990. Declaration for the Record of Decision, Portland Cement Company, Salt Lake City, Utah. op.cit.*

mg/kg). Concentrations of metals showed little variation among site #2, site#3, and the West Site.[60]

Analytical results of ponded water at the site are also summarized in the 1990 EPA Record of Decision. Ponded water was observed in several pools along the edges of disposal sites #2 and #3, and within the boundaries of site #3. Based on samples collected during regular observations at the site since 1984, the reported results show elevated levels of arsenic (2.53 mg/L maximum), chromium (3.00 mg/L maximum), and lead (0.37 mg/L maximum) above Federal drinking water limits, reaching as high 50 times the standard for arsenic (0.05 mg/L), 30 times the standard for hexavalent chromium (0.1 mg/L), and nearly 25 times the standard for lead (0.015 mg/L).[61] According to the Record of Decision, state officials observed ponded water migrating off site through a ditch that flows west into the City Drain.

The Record of Decision for the site concluded that the soil, ground water, and surface water are contaminated with CKD constituents both on and off site. A contaminant plume is present in the shallow ground water (approximately 2 meters below the surface) beneath the site and off site.[62] The plume is highly alkaline (pH: 12.6 maximum) and contains elevated concentrations of arsenic (11.4 mg/L maximum), lead (0.45 mg/L maximum), chromium, and other constituents including cadmium (6.04 mg/L maximum), fluoride (123 mg/L maximum), sulfate (15,500 mg/L maximum), and total dissolved solids (90,000 mg/L maximum). The plume has been detected immediately north of the site near a sewer alignment, and flows north across the site.[63] Ground-water sampling results from the Remedial Investigation indicate exceedances of the primary drinking water standards for pH, arsenic (2.3 × MCL), cadmium (4 × State MCL), chromium, and lead (30 × MCL). Remediation of the ground water cannot begin until the sources of contamination are controlled or removed.

Surface water samples collected from the City Drain, which flows through the site, indicate exceedances of the primary drinking water standards for pH and arsenic.[64]

Fugitive dust emissions also have been observed by state officials during high wind events, but apparently no NOVs have been issued. Modeling results of fugitive air emissions show airborne particulate concentrations in excess of the EPA 24-hour Significant Impact Limit of $5\mu g/m^3$, for an area extending 3.5 kilometers north of disposal site #3.[65]

In a 1990 Declaration for the Record of Decision, the State of Utah indicated, and EPA concurred, that excavation and off-site disposal of the CKD was their preferred alternative for remediation of the site. Remediation will begin approximately 18 months after completion of the

---

[60] *Ibid.*

[61] *Ibid.*

[62] *U.S. EPA and UDEQ, 1990. Declaration for the Record of Decision. op.cit.*

[63] *Ibid.*

[64] *Ibid.*

[65] *Ibid.*

remedial design.[66] The CKD will be removed to an off-site, state-approved, noncommercial, double-lined, industrial landfill in Salt Lake City, yet to be constructed. The bricks and soil will be treated on site. EPA and the State of Utah have yet to determine the method of treatment. Further ground-water monitoring will be conducted during the Remedial Action to determine whether the contamination is lessening or if the ground water has to be treated.[67]

5.2.5 Southwestern Portland Cement (Southdown, Inc.), Fairborn, Ohio

The Southdown, Inc. facility (formerly Southwestern States Portland Cement Company) site is located on approximately 1,620 hectares (4,000 acres), 2 kilometers (km) (1.2 miles) east of the City of Fairborn in Bath Township, Greene County, Ohio. The facility has operated one dry-process kiln since at least 1930. Prior to Southwestern Portland's purchase of the property in 1924, the site was owned by Universal Atlas Cement Company. During 1990, the principal commercial products manufactured at the facility included Types I, IA, II, and III Portland cement, masonry cements, and expansive cements.[68] A limestone quarry currently operated by the facility is located north of the site.

In 1990, the facility fueled its kiln with pulverized coal, waste tires, liquid hazardous waste-derived fuel, and fuel oil (for start-up only). Along with fossil fuels (coal: 68,600 metric tons (75,618 tons), oil: 504 kiloliters (133,089 gallons)), an estimated 4,170 metric tons of tires and 10,230 kiloliters of liquid hazardous waste were burned by Southwestern Portland in its cement manufacturing process.[69]

Facility property boundaries are adjacent to Mad River and the Beaver Creek watershed. A portion of the site (acreage unknown) is located in the 100-year floodplain. Wetlands that drain into Beaver Creek have been identified adjacent to the western property boundary. South and west of facility property are glacial deposits of unconsolidated gravel, sand, and clay that contain the aquifers that supply drinking water to the city of Fairborn. As of December 1991, approximately 35 people resided within the facility boundary, and an additional 30,000 residents lived within one mile of the plant. Both public and private drinking water wells are located within one mile of the facility boundary.[70]

An estimated 707,800 metric tons of CKD waste were landfilled in quarries owned by Southwestern Portland from 1924 through 1978.[71] Two tenths of one percent of all disposed material is chromic oxide brick, which was co-disposed along with CKD by Southwestern Portland from 1965 to 1978. CKD disposal occurred at 10 landfills dispersed within the facility

---

[66] *Ibid.*

[67] *U.S. EPA and UDEQ, 1990. Declaration for the Record of Decision. op.cit.*

[68] *Portland Cement Association, 1991. PCA CKD Survey: Response from the Southwestern Portland Cement Company, Fairborn, Ohio.*

[69] *Ibid.*

[70] *Ibid.*

[71] *Southdown, Inc., 1991. Site Assessment of Southwestern Portland Cement Properties Near Fairborn, Ohio: Phase 1, Preliminary Investigations, Part 1. Prepared by Panterra Corporation. March 11, 1991.*

property boundary. Universal Atlas Cement also may have disposed of CKD prior to 1924 into Landfill #1. The landfills are unlined and do not have leachate collection systems.[72] Plant operations and CKD disposal areas are shown in Exhibit 5-9.

Since the facility ceased its landfilling operations in 1980, CKD has been managed by temporarily storing the waste in five cement storage silos. A significant portion of the CKD at this facility is also recycled and used as raw material in the kiln.[73]

The Ohio Environmental Protection Agency (OEPA) is concerned about the potential of contaminant releases at Southwestern Portland from Landfill #1 and Landfill #6.[74] Landfill #1 covers 73 hectares and contains an estimated 11 million cubic meters (14.4 million cubic yards) of CKD-bearing fill.[75] It is adjacent to Mud Run, a tributary to the Mad River which is classified as a state resource water (recreational fishery). Landfill #6, an 11 hectare site, contains an estimated 920,000 cubic meters of CKD, co-disposed with kiln brick, plant and domestic trash, clean fill, and cover soil.[76] It is adjacent to 21 hectares of wetlands and overlies buried sand and gravel deposits that contain aquifers tapped by public water supply wells. Landfill #1 is the closest (1.6 kilometers) of all ten disposal sites to Fairborn's North Well Field. Landfill #6 is within 2.8 kilometers of four public water supply wells serving the needs of the 38,000 residents of the City of Fairborn.[77]

Contaminant releases have been observed in surface and ground waters associated with Landfill #6. Exhibit 5-10 summarizes the results of several sampling efforts that have been completed for this site. Surface water samples collected by OEPA (unpublished data) from seeps and streams around the toe of the landfill during March 1993 had elevated levels of arsenic (1 to 3 times OEPA standard), iron (8 to 31 times OEPA standard), and selenium (1 to 3 times above OEPA standard) above OEPA limits for drinking water. Levels of lead were at, or slightly below the Federal drinking water standard (0.015 mg/L). Ground-water samples collected at the same time near the seeps had elevated levels of arsenic (24 times OEPA standard), iron (31 times OEPA standard), and selenium (1.8 times OEPA standard) above OEPA drinking water limits. The surface water samples had very alkaline pH levels, reaching as high as 13.6.

---

[72] *Ohio Environmental Protection Agency, 1992. Personal communication with M. Lehar. January, 1992.*

[73] *Portland Cement Association, 1991. PCA CKD Survey. op.cit.*

[74] *Ohio Environmental Protection Agency, 1993. Personal communication with Thomas Schneider, Site Coordinator. April, 1993.*

[75] *Ibid.*

[76] *Ohio Environmental Protection Agency, 1993. Fact Sheet: Southwestern Portland Cement Company -- Landfill No. 6, Fairborn, Ohio. March, 1993.*

[77] *Ohio Environmental Protection Agency, 1986. Preliminary Assessment, Southwestern Portland Cement, Fairborn, Ohio (Landfill #6), Part 3 - Description of Hazardous Conditions and Incidents. July 18, 1986.*

The EPA has summarized reported analyses of surface waters and ground waters associated with Landfill #6.[78] As shown in Exhibit 5-10, surface water samples collected from December,

[78]*Ohio Environmental Protection Agency, 1992. Director's Final Findings and Order in the Matter of Southdown, Inc., 506 East Xenia Drive, Fairborn, Ohio.*

Exhibit 5-9

Site Diagram – Southwestern Portland Cement, Fairborn, Ohio

Exhibit 5-10

Summary of Exceedances[a] of State Metals Limits
Southwestern Portland Cement - Fairborn, Ohio
Landfill #6

Date/Media Sampled[b]			
3/93: Ground water[c,n]	3/93: Surface water[d,n]	3/93: Surface water[e,n]	3/93: Surface water[f,n]
As: 1.2 Fe: 9.4 Hg: 0.0016 Ni: 0.23 Se: 0.018 Zn: 0.05 pH: 13.38	As: 0.09 Fe: 9.24 Se: 0.026 pH: 12.89	As: 0.14 pH: 12.88	As: 0.157 Fe: 5.14 Se: 0.028 pH: 13.6
3/93: Surface water[g]	3/93: Composite Ground Water[h,o]	12/90-3/91: Surface Water[i,o]	10/90: Surface Water[j,o]
Fe: 2.39 pH: 12.8	As: 0.927 Cd: 0.024 Cr: 0.105 Pb: 0.108 Ni: 0.283 Se: 0.022 pH: 12.08	As: 0.83 Cd: 0.02 Cr: 0.100 Pb: 0.037 Ni: 0.283 pH: 12.9	As: 0.388 Pb: 0.070 Se: 0.07

Exhibit 5-10 (continued)

Summary of Exceedances[a] of State Metals Limits
Southwestern Portland Cement - Fairborn, Ohio
Landfill #6

Date/Media Sampled[b]			
11/90: pH readings[k,p]	Drinking Water[l]	Agricultural Water[l]	Background[m]
pH6: 13.44	As: 0.05 P	As: 0.1	As: <0.05
pH8: 9.76		Be: 0.1	Be: <0.004
pH9: 13.63	Ba: 1.0 P		
pH10: 13.70	Cd: 0.01 P		Cd: <0.001
pH11: 13.30	Cr: 0.05 P	Cr: 0.1	Cr: <0.01
	Cu: 1.0 S	Cu: 0.5	Cu: 0.02
	Fe: 0.3 S	Fe: 5.0	Fe: 0.12
	Pb: 0.05 P	Pb: 0.1	Pb: <0.003
	Mn: 0.5 S		Mn: <0.005
	Hg: 0.002 P	Hg: 0.01	Hg: <0.20
		Ni: 0.2	Ni: <0.01
	Se: 0.01 P	Se: 0.05	Se: <0.005
	Ag: 0.05 P		Ag: <0.001
	Zn: 5.0 S	Zn: 25.0	Zn: 0.02
	pH: 7 - 10.5 S		pH: 7.10

[a] *Constituent concentrations higher than State standards are marked in* bold. No violation of water standards is implied.

[b] All concentrations in mg/L except pH in standard units.

[c] Ground water from seep (MW-3) located at toe of landfill.

[d] Surface water sample (WN-2) from drainage from toe of landfill.

[e] Surface water sample (SW-16) from seep at toe of landfill.

[f] Surface water sample (SW-17) from seep at toe of landfill.

[g] Surface water sample (SW-15) collected from stream at west toe of landfill.

[h] Composite of ground-water samples from on-site monitoring wells. Reported constituent levels are the highest concentrations observed during the sampling period.

[i] Surface water and leachate samples from landfill. Listed constituent levels are the highest concentrations observed during the sampling period.

[j] Surface water sample of ponded leachate collected south of landfill.

[k] Readings from surface streams around the southern and western edge of landfill.

[l] Water Quality Standards, State of Ohio.

[m] Ground-water well located upgradient from Landfill #6.

[n] Ohio EPA, 1993, Unpublished surface water and ground-water monitoring data from Landfill #6, Southwestern Portland Cement Co, Fairborn, Ohio.

[o] Ohio EPA, 1992, Administrative Order against Southwestern Portland Cement Co., Greene Co., Ohio.

[p] EPA, 1991, Table 4-3: Field Investigation Team (FIT)-collected pH readings.

1990 to March, 1991 around Landfill #6 showed elevated levels of arsenic 17 times OEPA standard), cadmium (2 times OEPA standard), and chromium (2 times OEPA standard) above Ohio EPA drinking water limits. Levels of nickel were 1.4 times the State limit for agricultural waters. Highly alkaline ground waters (pH > 12) sampled during January and February, 1991, had similar degrees of exceedance for arsenic, cadmium, chromium, and nickel. In addition, levels of lead were reported to be as high as 7 times the Federal drinking water limit (0.015 mg/L). The pH readings from surface streams collected in November, 1990 were reported as high as 13.7.

In July 1992, the OEPA issued an administrative enforcement order against the facility for past disposal activities at Landfill #6. In the order's findings of fact, OEPA determined that the wastes disposed of in Landfill #6, including CKD, contained arsenic, lead, mercury, nickel, selenium, zinc, cadmium, chromium, copper, and phenolics, and, therefore, are industrial wastes. OEPA also determined that the leachate, because of its high pH (up to 13.7), is a hazardous waste, and when released from Landfill #6, constitutes disposal of hazardous waste. According to State law, the deposit (i.e., disposal) of industrial waste and hazardous waste in surface and ground waters constitutes pollution (i.e., damage) of State waters. The order requires that a CERCLA Remedial Investigation and Feasibility Study be conducted for this area.[79] To date, no remedial actions have been undertaken at this site.

Surface water and ground-water samples collected from streams around Landfill #1 are characterized by high pH, but only arsenic, iron, and selenium are elevated above State water quality standards. In a reconnaissance of the site in June, 1991, the Ohio EPA reported levels of arsenic (0.06 mg/L) 1.2 times the OEPA drinking water limit of 0.05 mg/L, iron (0.51 mg/L) three times the OEPA secondary drinking water limit (0.3 mg/L), and selenium (0.021 mg/L) 2.1 times the OEPA drinking water limit of 0.01 in surface water from a seep at the point of emergence along the north toe of the landfill. The pH of the water was highly alkaline (11.58) and exceeded the State drinking water standard of 10.5.[80] Elevated levels of arsenic (0.12 mg/L, 2.4 times OEPA drinking water limit) and iron (4.1 mg/L, 13.6 times Ohio EPA drinking water limit) in ground water associated with a seepage along the northwest slope of Landfill #1 also were reported in a site assessment of the landfill prepared for Southdown.[81]

The OEPA has also reported elevated levels of copper, lead, zinc, and selenium in excess of standards for warmwater wildlife habitats, in surface water samples collected along the margin of Landfill #1.[82] Although the concentrations of these elements are below the general State drinking water standards (copper: < 10 - 45 ppb, lead: 10 ppb, zinc: 16 - 60 ppb), these elements are considered elevated due to the very low water hardness of these samples (12-41 ppm $CaCO_3$) relative to normal water hardness (200-400 mg/L $CaCO_3$). The low water hardness increases the sensitivity of aquatic organisms to these constituents. The State limits for lead in waters with low

---

[79] *Ibid.*

[80] Ohio Environmental Protection Agency, 1991. Memo from Louise T. Snyder, DWQPA, SDWO on the Southwestern Portland Cement facility, Landfill #1. September 9, 1991.

[81] Southdown, Inc., 1992. *Subarea 1 Site Evaluation, Southwestern Portland Cement Company, Fairborn, Ohio.* Prepared by Ground Water Associates, Inc, April, 1992.

[82] Ohio Environmental Protection Agency, 1991. Memo from Louise Snyder, *op.cit.*

hardness (12-41 ppm $CaCO_3$) range from 9.1 ppb to 42 ppb. The ranges for copper and zinc are 2.1-7.2 ppb and 20-55 ppb, respectively.[83]

Damages at this site include contamination of on-site surface water and ground water. Damages have been documented in several studies. The contaminants of most concern to human health at both CKD landfills include pH and arsenic. The metals arsenic, selenium, chromium, lead, and pH have all been observed at levels exceeding either primary or secondary drinking water standards. These damages have resulted from the disposal of CKD in unlined landfills. No remedial actions have been initiated for this site. However, a 1992 Administrative Order issued by the Ohio Department of Natural Resources requires the company to undertake a remedial investigation and feasibility study for Landfill #6.

5.2.6 National Gypsum Co./Lafarge Corp., Alpena, Michigan

National Gypsum Company owned and operated a cement manufacturing facility northeast of Alpena, Michigan on the shore of Lake Huron's Thunder Bay. In 1986, Lafarge Corporation purchased the facility from National Gypsum and is the current owner and operator. Cement has been manufactured at this site since at least the 1890s.[84]

During the 1980s, National Gypsum disposed of its CKD in a waste pile located northeast of the facility along the edge of Lake Huron. The site covers more than 30 hectares (77 acres) and is approximately 300 meters (984 feet) x 600 meters, with CKD piled as high as 18 meters above the level of the lake.[85] The site has been inactive since 1986, when Lafarge took over operations. All CKD in this pile was generated prior to Lafarge's decision to burn hazardous waste fuels.[86] A site layout is provided in Exhibit 5-11.

Evidence of environmental release of CKD originating from the pile has been documented by the Michigan Department of Natural Resources (MDNR). During a site visit in March, 1993, MDNR inspectors reported CKD washing into a large erosion ditch (1 meter wide x 3 meters deep) leading to Lake Huron, along with other debris, including airbags, drums, kiln brick, and other miscellaneous debris co-managed with the dust. In addition, waves from the lake were reported to be actively eroding the pile along 6- to 9-meter high banks on the south end of the shoreline.[87] MDNR has provided the Agency with photographs and videotapes

---

[83] *Ibid.*

[84] Michigan Department of Natural Resources, 1993. Personal communication with JoAnn Merrick, Acting Chief, Compliance and Enforcement Section, Waste Management Division, Michigan Department of Natural Resources. July, 1993.

[85] Michigan Department of Natural Resources, 1993. Letter from John W. Vick, Environmental Response Division to Rebecca Beasly, Assistant General Council, National Gypsum Company. May, 1993.

[86] Michigan Department of Natural Resources, 1993, Interoffice Communication from Jim Sygo, Chief, Waste Management Division, to Russell Harding, Deputy Director. April, 1993.

[87] Michigan Department of Natural Resources, 1993. John W. Vick letter. *op. cit.*

showing CKD washing into Lake Huron by means of flow down erosion channels on the pile and wave action along the shore.[88]

[88] Michigan Department of Natural Resources, 1993. Photos of National Gypsum CKD pile taken during MDNR site visits on March 30, 1993 and April 22, 1993. Videotape of National Gypsum CKD pile taken by John W. Vick on April 30, 1993.

Exhibit 5-11

Site Diagram – National Gypsum Co./LaFarge Corp., Alpena, Michigan

Evidence of contamination was found in soil and surface water samples obtained from the pile near the shore of Lake Huron. As shown in Exhibit 5-12, surface water samples from the erosion ditch and nearby Lake Huron show levels of arsenic and lead in excess of standards specified under the Michigan Environmental Response Act (MERA, 1982 PA 307, as amended). Grab samples of soil from the beach and upslope from the shore on the CKD pile had elevated levels of arsenic, selenium, lead, and zinc, all above default values for soil cleanup.[89]

MDNR considers the presence of heavy metals in CKD and nearby surface waters to be a "release of hazardous substances under MERA," which "represents a threat to public health and the environment." MDNR has advised both National Gypsum Co. and Lafarge Corp. that they

[89] Michigan Department of Natural Resources, 1993. John W. Vick letter, *op.cit.*

are in violation of the Michigan Water Resources Commission Act (MWRC, PA 1929, as amended).[90]

[90] *Ibid.*

Exhibit 5-12

Summary of Exceedances of State Metals Limits
National Gypsum Co./Lafarge Corp., Alpena, Michigan

Date: Media Sampled	Constituent/Observed Concentration	State Standard*
3/93: Surface Water; Shore of Lake Huron adjacent to CKD pile.	As: 30 ppb	As: 0.02 ppb
3/93: Surface Water: Erosion ditch on CKD pile 20 feet from shore.	Pb: 32 ppb	Pb: 8 ppb
3/93: Soil Sample: Surface grab sample taken from CKD pile.	As: 6.52 ppm Se: 0.546 ppm Zn: 53 ppm	As: 5.8 ppm‡ Se: 0.41 ppm‡ Zn: 47 ppm‡
3/93: Soil Sample: Surface grab sample taken from beach northeast of erosion ditch.	As: 27.1 ppm Pb: 36 ppm Zn: 115 ppm	As: 5.8 ppm‡ Pb: 21 ppm‡ Zn: 47 ppm‡
3/93: Soil Sample: Surface grab sample taken from sediment at mouth of erosion ditch.	As: 23.2 ppm Pb: 51 ppm Se: 3.15 ppm Zn: 134 ppm	As: 5.8 ppm‡ Pb: 21 ppm‡ Se: 0.41 ppm‡ Zn: 47 ppm‡

* Standards specified under the Michigan Environmental Response Act (MERA) (1982 PA 307, as amended).
‡ MERA Type A soil cleanup criteria

Currently, MDNR is negotiating with both companies to initiate interim response actions to prevent further erosion and deposition of contaminants into Lake Huron.[91]

5.2.7 Ash Grove Cement West, Montana City, Montana

Ash Grove Cement West's Montana City facility is located on a 197 hectare (486 acre) site less than 10 kilometers (km) (6.2 miles) south of the city of Helena, Montana. The plant utilizes a wet process to manufacture cement in one kiln, which has an annual capacity of

[91] Michigan Department of Natural Resources, 1993. Personal communication with John W. Vick, Environmental Quality Analyst, Environmental Response Division.

269,510 metric tons (297,079 tons).[92] Facility boundaries are adjacent to the unincorporated town of Montana City, with an estimated 300 residents living within 0.8 km of the facility's boundary. No known sensitive areas (e.g., wetlands or endangered species habitats) are located nearby. However, there are private drinking water wells within 0.8 km of the facility's boundary.[93]

In 1990, the facility utilized predominantly natural gas, coal, and coke for its fuel needs. These fuels were supplemented by 8,270 kiloliters (2.18 million gallons) of waste pitch.[94] In 1991, Ash Grove West applied for precompliance certification to burn hazardous waste under the Boiler and Industrial Furnace rule, but was denied status by Region 8.

Waste CKD is landfilled in a draw on the east side of the quarry. In 1990, Ash Grove West in Montana City generated an estimated 29,000 metric tons of CKD, of which 19,000 metric tons were landfilled (the remainder being returned to the kiln). Prior to 1989, CKD was co-managed with shale overburden mined from quarry operations. Since the fall of 1989, CKD has been monofilled over the co-managed pile. At the end of 1991, the landfill was estimated to hold 77,000 metric tons of cumulative material.[95]

Stormwater run-off flows into one of two holding ponds, each of which discharges south of the plant proper via permitted outfalls into Prickly Pear Creek. Run-off from the active CKD landfill flows into a lower holding pond where it percolates through a gravel dam and discharges into Prickly Pear Creek (outfall is currently valved shut).[96,97] Run-off from a second upper pond discharges into Prickly Pear Creek, 245 meters (800 feet) further upstream from the discharge outfall from the lower pond.[98] CKD disposal areas are shown in Exhibit 5-13.

In December 1990, the State of Montana Department of Health and Environmental Sciences filed a Letter of Complaint and Application for Injunction against Ash Grove West, Inc. for violations of discharge permit limits at the Montana City facility.[99] In its claim, the Department describes two catastrophic releases from the plant's wastewater ponds into Prickly Pear Creek. Both releases involved quantities of CKD which flowed into the creek.

---

[92] Portland Cement Association, 1992. PCA CKD Survey: Response from Ash Grove West, Inc., Montana City, Montana.

[93] *Ibid.*

[94] *Ibid.*

[95] Portland Cement Association, 1992. PCA CKD Survey: Response from Ash Grove West, Inc., Montana City, Montana.

[96] *Ibid.*

[97] Ash Grove Cement West, Montana City, Montana facility, 1993. Personal communication with plant personnel. July, 1993.

[98] *Ibid.*

[99] Department of Health and Environmental Sciences, State of Montana, 1990. *State of Montana ex. rel. v. Ash Grove Cement West, Inc.* Complaint and Application for Injunction, Cause No. 8442, Montana 5th Judicial District Court, Jefferson County. December 11, 1990.

Exhibit 5-13

Site Diagram – Ash Grove Cement West, Montana City, Montana

As described in the Complaint, the first violation, which occurred on June 28, 1990, involved the release into Prickly Pear Creek of substantial quantities of sludge which had been previously excavated that morning from the bottom of the lower wastewater pond. A late morning/early afternoon storm washed substantial quantities of the excavated materials into Prickly Pear Creek. Subsequent measurements of creek waters downstream of the discharge point showed a total suspended solids level of 586.8 mg/L, compared to 10.1 mg/L upstream of the discharge point.[100] This is a violation of the plant's State effluent limit of 50 mg/L for total dissolved solids.[101]

---

[100] *Ibid.*

[101] Department of Health and Environmental Sciences, State of Montana, 1990. *State of Montana ex. rel. v. Ash Grove Cement West, Inc.*, Consent Decree, Stipulation and Order, Cause No. 8442, Montana 5th Judicial Court, Jefferson County.

In the second violation, on August 16, 1990, the lower holding pond failed after Ash Grove pumped dense liquid sludge from the slurry tanks into the holding pond. Catastrophic failure of the holding pond resulted in discharges into Prickly Pear Creek that raised the concentration of total dissolved solids from 5.2 mg/L upstream to 37,368 mg/L near the discharge point, and 4,453 mg/L 150 meters downstream from the discharge point.[102] This is also a violation of the plant's State limit of 50 mg/L for total dissolved solids.

Ash Grove acknowledged in a Consent Decree that both events allowed materials to pollute Prickly Pear Creek in violation of State law. In addition to exceeding the State permit limit for total dissolved solids, the discharges increased the turbidity above naturally occurring conditions, and "created a nuisance, harmed aquatic life, and formed objectionable emulsions and deposits . . ."[103]

5.3 CASES OF POTENTIAL DAMAGE TO GROUND AND SURFACE WATER

The Agency has identified cases of potential damage at three sites: (1) Texas Industries facility in Midlothian, Texas, (2) Holnam facility in Artesia, Mississippi and, (3) Markey Machinery Property in Seattle, Washington. In these cases there is information available to indicate that surface water located on site has been contaminated above Maximum Contaminant Levels (MCLs), but there is no data to indicate whether or not such levels have interacted with either nearby ground water or other surface waters off site. For example, at the Texas Industries facility, exceedances of metal standards were found in small, isolated puddles that were in no obvious communication with any other body of surface water. Furthermore, there is no known ground-water contamination at the Holnam facility.

5.3.1 Texas Industries, Inc., Midlothian, Texas

The Texas Industries facility is located in Ellis County on a 643 hectare (1,587 acre) tract of land 3.5 kilometers (km) (2.17 miles) southwest of Midlothian, Texas.[104] The plant manufactures approximately 1,088,900 metric tons (1,200,286 tons) of Portland cement per year in four wet process rotary kilns, and is authorized to burn hazardous waste for energy recovery.[105] Land use in the vicinity is predominantly agricultural, with low-density rural residential areas located adjacent to facility property boundaries to the east, south, and northwest.[106]

---

[102] Department of Health and Environmental Sciences, State of Montana, 1990. Complaint and Application for Injunction, *op.cit.*

[103] Department of Health and Environmental Sciences, State of Montana, 1990. *State of Montana ex. rel. v. Ash Grove Cement West, Inc.*, Consent Decree, Stipulation, and Order, Cause No 8442, Montana 5th Judicial District Court, Jefferson County. December 19, 1990.

[104] Texas Industries, Inc., 1992. *Part B Permit Application to EPA and the Texas Water Commission.* Prepared by Entellect Environmental Services for Texas Industries, Inc. p. 1-9.

[105] U.S. EPA Region 6, 1992. *Complaint, Compliance Order, and Notice of Opportunity for Hearing in the Matter of Texas Industries, Inc., Midlothian, Texas.* Docket No. RCRA VI-203-H, Hazardous Waste Management Division. September, 1992.

[106] Texas Industries, Inc., 1992. *op.cit.*

Each kiln produces 40 to 45 metric tons of CKD per day, all of which is wasted from the system. Sixty to 80 percent of the CKD is pelletized in a pug mill and landfilled on site, while the remaining 20 to 40 percent is sold either as roadbed filler or as a stabilizer.[107] The facility has two on-site CKD landfills, an active landfill in a depleted quarry area, and an inactive capped landfill located in the quarry to the southwest of the active disposal area.[108] A diagram of the site is provided in Exhibit 5-14.

Exhibit 5-14

Site Diagram – Texas Industries, Inc., Midlothian, Texas

Temperate climactic conditions

1990 to March, 1991 around Landfill #6 showed elevated levels of arsenic 17 times OEPA standard), cadmium (2 times OEPA standard), and chromium (2 times OEPA standard) above Ohio EPA drinking water limits. Levels of nickel were 1.4 times the State limit for agricultural waters. Highly alkaline ground waters (pH > 12) sampled during January and February, 1991, had similar degrees of exceedance for arsenic, cadmium, chromium, and nickel. In addition, levels of lead were reported to be as high as 7 times the Federal drinking water limit (0.015 mg/L). The pH readings from surface streams collected in November, 1990 were reported as high as 13.7.

In July 1992, the OEPA issued an administrative enforcement order against the facility for past disposal activities at Landfill #6. In the order's findings of fact, OEPA determined that the wastes disposed of in Landfill #6, including CKD, contained arsenic, lead, mercury, nickel, selenium, zinc, cadmium, chromium, copper, and phenolics, and, therefore, are industrial wastes. OEPA also determined that the leachate, because of its high pH (up to 13.7), is a hazardous waste, and when released from Landfill #6, constitutes disposal of hazardous waste. According to State law, the deposit (i.e., disposal) of industrial waste and hazardous waste in surface and ground waters constitutes pollution (i.e., damage) of State waters. The order requires that a CERCLA Remedial Investigation and Feasibility Study be conducted for this area.[79] To date, no remedial actions have been undertaken at this site.

Surface water and ground-water samples collected from streams around Landfill #1 are characterized by high pH, but only arsenic, iron, and selenium are elevated above State water quality standards. In a reconnaissance of the site in June, 1991, the Ohio EPA reported levels of arsenic (0.06 mg/L) 1.2 times the OEPA drinking water limit of 0.05 mg/L, iron (0.51 mg/L) three times the OEPA secondary drinking water limit (0.3 mg/L), and selenium (0.021 mg/L) 2.1 times the OEPA drinking water limit of 0.01 in surface water from a seep at the point of emergence along the north toe of the landfill. The pH of the water was highly alkaline (11.58) and exceeded the State drinking water standard of 10.5.[80] Elevated levels of arsenic (0.12 mg/L, 2.4 times OEPA drinking water limit) and iron (4.1 mg/L, 13.6 times Ohio EPA drinking water limit) in ground water associated with a seepage along the northwest slope of Landfill #1 also were reported in a site assessment of the landfill prepared for Southdown.[81]

The OEPA has also reported elevated levels of copper, lead, zinc, and selenium in excess of standards for warmwater wildlife habitats, in surface water samples collected along the margin of Landfill #1.[82] Although the concentrations of these elements are below the general State drinking water standards (copper: < 10 - 45 ppb, lead: 10 ppb, zinc: 16 - 60 ppb), these elements are considered elevated due to the very low water hardness of these samples (12-41 ppm $CaCO_3$) relative to normal water hardness (200-400 mg/L $CaCO_3$). The low water hardness increases the sensitivity of aquatic organisms to these constituents. The State limits for lead in waters with low

---

[79] *Ibid.*

[80] Ohio Environmental Protection Agency, 1991. Memo from Louise T. Snyder, DWQPA, SDWO on the Southwestern Portland Cement facility, Landfill #1. September 9, 1991.

[81] Southdown, Inc., 1992. *Subarea 1 Site Evaluation, Southwestern Portland Cement Company, Fairborn, Ohio.* Prepared by Ground Water Associates, Inc, April, 1992.

[82] Ohio Environmental Protection Agency, 1991. Memo from Louise Snyder, *op.cit.*

hardness (12-41 ppm $CaCO_3$) range from 9.1 ppb to 42 ppb. The ranges for copper and zinc are 2.1-7.2 ppb and 20-55 ppb, respectively.[83]

Damages at this site include contamination of on-site surface water and ground water. Damages have been documented in several studies. The contaminants of most concern to human health at both CKD landfills include pH and arsenic. The metals arsenic, selenium, chromium, lead, and pH have all been observed at levels exceeding either primary or secondary drinking water standards. These damages have resulted from the disposal of CKD in unlined landfills. No remedial actions have been initiated for this site. However, a 1992 Administrative Order issued by the Ohio Department of Natural Resources requires the company to undertake a remedial investigation and feasibility study for Landfill #6.

5.2.6 National Gypsum Co./Lafarge Corp., Alpena, Michigan

National Gypsum Company owned and operated a cement manufacturing facility northeast of Alpena, Michigan on the shore of Lake Huron's Thunder Bay. In 1986, Lafarge Corporation purchased the facility from National Gypsum and is the current owner and operator. Cement has been manufactured at this site since at least the 1890s.[84]

During the 1980s, National Gypsum disposed of its CKD in a waste pile located northeast of the facility along the edge of Lake Huron. The site covers more than 30 hectares (77 acres) and is approximately 300 meters (984 feet) x 600 meters, with CKD piled as high as 18 meters above the level of the lake.[85] The site has been inactive since 1986, when Lafarge took over operations. All CKD in this pile was generated prior to Lafarge's decision to burn hazardous waste fuels.[86] A site layout is provided in Exhibit 5-11.

Evidence of environmental release of CKD originating from the pile has been documented by the Michigan Department of Natural Resources (MDNR). During a site visit in March, 1993, MDNR inspectors reported CKD washing into a large erosion ditch (1 meter wide x 3 meters deep) leading to Lake Huron, along with other debris, including airbags, drums, kiln brick, and other miscellaneous debris co-managed with the dust. In addition, waves from the lake were reported to be actively eroding the pile along 6- to 9-meter high banks on the south end of the shoreline.[87] MDNR has provided the Agency with photographs and videotapes

---

[83] *Ibid.*

[84] Michigan Department of Natural Resources, 1993. Personal communication with JoAnn Merrick, Acting Chief, Compliance and Enforcement Section, Waste Management Division, Michigan Department of Natural Resources. July, 1993.

[85] Michigan Department of Natural Resources, 1993. Letter from John W. Vick, Environmental Response Division to Rebecca Beasly, Assistant General Council, National Gypsum Company. May, 1993.

[86] Michigan Department of Natural Resources, 1993, Interoffice Communication from Jim Sygo, Chief, Waste Management Division, to Russell Harding, Deputy Director. April, 1993.

[87] Michigan Department of Natural Resources, 1993. John W. Vick letter. *op. cit.*

showing CKD washing into Lake Huron by means of flow down erosion channels on the pile and wave action along the shore.[88]

[88] Michigan Department of Natural Resources, 1993. Photos of National Gypsum CKD pile taken during MDNR site visits on March 30, 1993 and April 22, 1993. Videotape of National Gypsum CKD pile taken by John W. Vick on April 30, 1993.

Exhibit 5-11

Site Diagram – National Gypsum Co./LaFarge Corp., Alpena, Michigan

Evidence of contamination was found in soil and surface water samples obtained from the pile near the shore of Lake Huron. As shown in Exhibit 5-12, surface water samples from the erosion ditch and nearby Lake Huron show levels of arsenic and lead in excess of standards specified under the Michigan Environmental Response Act (MERA, 1982 PA 307, as amended). Grab samples of soil from the beach and upslope from the shore on the CKD pile had elevated levels of arsenic, selenium, lead, and zinc, all above default values for soil cleanup.[89]

MDNR considers the presence of heavy metals in CKD and nearby surface waters to be a "release of hazardous substances under MERA," which "represents a threat to public health and the environment." MDNR has advised both National Gypsum Co. and Lafarge Corp. that they

[89] Michigan Department of Natural Resources, 1993. John W. Vick letter, *op.cit.*

are in violation of the Michigan Water Resources Commission Act (MWRC, PA 1929, as amended).[90]

[90] *Ibid.*

Exhibit 5-12

Summary of Exceedances of State Metals Limits
National Gypsum Co./Lafarge Corp., Alpena, Michigan

Date:	Media Sampled	Constituent/Observed Concentration	State Standard*
3/93:	Surface Water; Shore of Lake Huron adjacent to CKD pile.	As: 30 ppb	As: 0.02 ppb
3/93:	Surface Water: Erosion ditch on CKD pile 20 feet from shore.	Pb: 32 ppb	Pb: 8 ppb
3/93:	Soil Sample: Surface grab sample taken from CKD pile.	As: 6.52 ppm Se: 0.546 ppm Zn: 53 ppm	As: 5.8 ppm‡ Se: 0.41 ppm‡ Zn: 47 ppm‡
3/93:	Soil Sample: Surface grab sample taken from beach northeast of erosion ditch.	As: 27.1 ppm Pb: 36 ppm Zn: 115 ppm	As: 5.8 ppm‡ Pb: 21 ppm‡ Zn: 47 ppm‡
3/93:	Soil Sample: Surface grab sample taken from sediment at mouth of erosion ditch.	As: 23.2 ppm Pb: 51 ppm Se: 3.15 ppm Zn: 134 ppm	As: 5.8 ppm‡ Pb: 21 ppm‡ Se: 0.41 ppm‡ Zn: 47 ppm‡

* Standards specified under the Michigan Environmental Response Act (MERA) (1982 PA 307, as amended).
‡ MERA Type A soil cleanup criteria

Currently, MDNR is negotiating with both companies to initiate interim response actions to prevent further erosion and deposition of contaminants into Lake Huron.[91]

5.2.7 Ash Grove Cement West, Montana City, Montana

Ash Grove Cement West's Montana City facility is located on a 197 hectare (486 acre) site less than 10 kilometers (km) (6.2 miles) south of the city of Helena, Montana. The plant utilizes a wet process to manufacture cement in one kiln, which has an annual capacity of

[91] Michigan Department of Natural Resources, 1993. Personal communication with John W. Vick, Environmental Quality Analyst, Environmental Response Division.

269,510 metric tons (297,079 tons).[92] Facility boundaries are adjacent to the unincorporated town of Montana City, with an estimated 300 residents living within 0.8 km of the facility's boundary. No known sensitive areas (e.g., wetlands or endangered species habitats) are located nearby. However, there are private drinking water wells within 0.8 km of the facility's boundary.[93]

In 1990, the facility utilized predominantly natural gas, coal, and coke for its fuel needs. These fuels were supplemented by 8,270 kiloliters (2.18 million gallons) of waste pitch.[94] In 1991, Ash Grove West applied for precompliance certification to burn hazardous waste under the Boiler and Industrial Furnace rule, but was denied status by Region 8.

Waste CKD is landfilled in a draw on the east side of the quarry. In 1990, Ash Grove West in Montana City generated an estimated 29,000 metric tons of CKD, of which 19,000 metric tons were landfilled (the remainder being returned to the kiln). Prior to 1989, CKD was co-managed with shale overburden mined from quarry operations. Since the fall of 1989, CKD has been monofilled over the co-managed pile. At the end of 1991, the landfill was estimated to hold 77,000 metric tons of cumulative material.[95]

Stormwater run-off flows into one of two holding ponds, each of which discharges south of the plant proper via permitted outfalls into Prickly Pear Creek. Run-off from the active CKD landfill flows into a lower holding pond where it percolates through a gravel dam and discharges into Prickly Pear Creek (outfall is currently valved shut).[96,97] Run-off from a second upper pond discharges into Prickly Pear Creek, 245 meters (800 feet) further upstream from the discharge outfall from the lower pond.[98] CKD disposal areas are shown in Exhibit 5-13.

In December 1990, the State of Montana Department of Health and Environmental Sciences filed a Letter of Complaint and Application for Injunction against Ash Grove West, Inc. for violations of discharge permit limits at the Montana City facility.[99] In its claim, the Department describes two catastrophic releases from the plant's wastewater ponds into Prickly Pear Creek. Both releases involved quantities of CKD which flowed into the creek.

---

[92] Portland Cement Association, 1992. PCA CKD Survey: Response from Ash Grove West, Inc., Montana City, Montana.

[93] *Ibid.*

[94] *Ibid.*

[95] Portland Cement Association, 1992. PCA CKD Survey: Response from Ash Grove West, Inc., Montana City, Montana.

[96] *Ibid.*

[97] Ash Grove Cement West, Montana City, Montana facility, 1993. Personal communication with plant personnel. July, 1993.

[98] *Ibid.*

[99] Department of Health and Environmental Sciences, State of Montana, 1990. *State of Montana ex. rel. v. Ash Grove Cement West, Inc.* Complaint and Application for Injunction, Cause No. 8442, Montana 5th Judicial District Court, Jefferson County. December 11, 1990.

Exhibit 5-13

Site Diagram – Ash Grove Cement West, Montana City, Montana

As described in the Complaint, the first violation, which occurred on June 28, 1990, involved the release into Prickly Pear Creek of substantial quantities of sludge which had been previously excavated that morning from the bottom of the lower wastewater pond. A late morning/early afternoon storm washed substantial quantities of the excavated materials into Prickly Pear Creek. Subsequent measurements of creek waters downstream of the discharge point showed a total suspended solids level of 586.8 mg/L, compared to 10.1 mg/L upstream of the discharge point.[100] This is a violation of the plant's State effluent limit of 50 mg/L for total dissolved solids.[101]

---

[100] *Ibid.*

[101] Department of Health and Environmental Sciences, State of Montana, 1990. *State of Montana ex. rel. v. Ash Grove Cement West, Inc.*, Consent Decree, Stipulation and Order, Cause No. 8442, Montana 5th Judicial Court, Jefferson County.

In the second violation, on August 16, 1990, the lower holding pond failed after Ash Grove pumped dense liquid sludge from the slurry tanks into the holding pond. Catastrophic failure of the holding pond resulted in discharges into Prickly Pear Creek that raised the concentration of total dissolved solids from 5.2 mg/L upstream to 37,368 mg/L near the discharge point, and 4,453 mg/L 150 meters downstream from the discharge point.[102] This is also a violation of the plant's State limit of 50 mg/L for total dissolved solids.

Ash Grove acknowledged in a Consent Decree that both events allowed materials to pollute Prickly Pear Creek in violation of State law. In addition to exceeding the State permit limit for total dissolved solids, the discharges increased the turbidity above naturally occurring conditions, and "created a nuisance, harmed aquatic life, and formed objectionable emulsions and deposits . . ."[103]

5.3 CASES OF POTENTIAL DAMAGE TO GROUND AND SURFACE WATER

The Agency has identified cases of potential damage at three sites: (1) Texas Industries facility in Midlothian, Texas, (2) Holnam facility in Artesia, Mississippi and, (3) Markey Machinery Property in Seattle, Washington. In these cases there is information available to indicate that surface water located on site has been contaminated above Maximum Contaminant Levels (MCLs), but there is no data to indicate whether or not such levels have interacted with either nearby ground water or other surface waters off site. For example, at the Texas Industries facility, exceedances of metal standards were found in small, isolated puddles that were in no obvious communication with any other body of surface water. Furthermore, there is no known ground-water contamination at the Holnam facility.

5.3.1 Texas Industries, Inc., Midlothian, Texas

The Texas Industries facility is located in Ellis County on a 643 hectare (1,587 acre) tract of land 3.5 kilometers (km) (2.17 miles) southwest of Midlothian, Texas.[104] The plant manufactures approximately 1,088,900 metric tons (1,200,286 tons) of Portland cement per year in four wet process rotary kilns, and is authorized to burn hazardous waste for energy recovery.[105] Land use in the vicinity is predominantly agricultural, with low-density rural residential areas located adjacent to facility property boundaries to the east, south, and northwest.[106]

---

[102] Department of Health and Environmental Sciences, State of Montana, 1990. Complaint and Application for Injunction, *op.cit.*

[103] Department of Health and Environmental Sciences, State of Montana, 1990. *State of Montana ex. rel. v. Ash Grove Cement West, Inc.*, Consent Decree, Stipulation, and Order, Cause No 8442, Montana 5th Judicial District Court, Jefferson County. December 19, 1990.

[104] Texas Industries, Inc., 1992. *Part B Permit Application to EPA and the Texas Water Commission.* Prepared by Entellect Environmental Services for Texas Industries, Inc. p. 1-9.

[105] U.S. EPA Region 6, 1992. *Complaint, Compliance Order, and Notice of Opportunity for Hearing in the Matter of Texas Industries, Inc., Midlothian, Texas.* Docket No. RCRA VI-203-H, Hazardous Waste Management Division. September, 1992.

[106] Texas Industries, Inc., 1992. *op.cit.*

Each kiln produces 40 to 45 metric tons of CKD per day, all of which is wasted from the system. Sixty to 80 percent of the CKD is pelletized in a pug mill and landfilled on site, while the remaining 20 to 40 percent is sold either as roadbed filler or as a stabilizer.[107] The facility has two on-site CKD landfills, an active landfill in a depleted quarry area, and an inactive capped landfill located in the quarry to the southwest of the active disposal area.[108] A diagram of the site is provided in Exhibit 5-14.

Exhibit 5-14

Site Diagram – Texas Industries, Inc., Midlothian, Texas

Temperate climactic conditions in the region feed intermittent streams that flow over impermeable clayey soils. Surface run-off from the plant proper discharges into the eastern branch of Cottonwood Creek, and 5 kilometers further downstream into Joe Poole Lake, a public drinking water reservoir. Surface run-off from the inactive pile flows into the East Branch of

---

[107] Texas Industries, Inc., 1992. Personal communication with plant operators during EPA CKD sampling visit. March, 1992.

[108] *Ibid.*

Cottonwood Creek,[109] while run-off from the active CKD disposal area spills into the quarry and is confined to the facility property.[110] The quarry floor (18 meter (60 feet depth) is fractured, and there is a large body of ponded water near the active disposal pile. Perched water tables are within 11 meters of the surface and are above the quarry floor.[111] Beneath the facility the uppermost aquifer is located 73 meters below grade.[112]

CKD from the Texas Industries facility is known to contain leachable chromium. Samples of CKD collected by the Texas Water Commission (TWC) in 1991, directly from beneath one kiln (Kiln #4) had chromium levels in leachate of 0.44 mg/L. Kiln dust from the active landfill had a level of chromium below, but close to 0.08 mg/L. One sample of CKD from a "fugitive dust landfill" had a total chromium content of 881 mg/kg.[113]

During January 1992, inspectors from the TWC noticed pools of reddish-brown liquid seeping from the inactive pile during a RCRA compliance inspection of Texas Industries' hazardous waste treatment, storage, and disposal facilities.[114] This seepage, believed to be storm run-off,[115] was noted as an "Area of Concern" in a Notice of Violation letter to the facility describing violations of solid waste rules.[116] Analysis of a sample of this liquid showed levels of arsenic of 0.2 mg/L and lead of 0.03 mg/L.[117]

The seepage was again observed during a subsequent inspection of the facility in March 1992. Sample analysis showed the liquid to be extremely alkaline (pH: 13), with levels of arsenic of 0.46 mg/L and chromium at 1.07 mg/L.[118] As a result of the March 1992, inspection, EPA

---

[109] Texas Water Commission, 1993. Personal communication with Sam Barrett, Field Investigator. July, 1993.

[110] Texas Industries, Inc., 1992. Personal communication with facility personnel during EPA CKD sampling visit. March, 1992.

[111] Texas Water Commission, 1990. RCRA Facility Assessment Facility Checklist for Texas Industries, Incorporated, Peter F. Lodde, reviewer.

[112] *Ibid.*

[113] Texas Water Commission, 1991. Letter from Allen Hayes, Environmental Quality Specialist, to files regarding a review of laboratory analyses of samples collected on October 21 and 22, 1991, from North Texas Cement Co., Texas Industries, Inc., and Box Crow Cement Co. November 18, 1991.

[114] Texas Water Commission, 1992. Interoffice communication from Sam Barrett, Field Investigator, to files regarding compliance inspection at Texas Industries, Inc., Midlothian, Texas. February, 1992.

[115] Texas Water Commission, 1992. Personal communication with Sam Barrett, Field Investigator. June, 1992.

[116] Texas Water Commission, 1992. Letter from Mary B. Adrian, Section Leader, Enforcement Section, TWC, to E.L. Faciane, Staff Vice-President, Environmental Affairs, Texas Industries, p.3. April 15, 1992.

[117] Texas Water Commission, 1992. Interoffice memorandum from Sam Barrett, Field Investigator to files regarding record review of analytical results of samples collected from Texas Industries, Inc. during inspections on January 27, 1992, March 10, 1992, and April 10, 1992. October 21, 1992.

[118] Texas Water Commission, 1992. Letter from Sam Barrett to files regarding samples taken at Texas Industries, *op. cit.*

Region 6 filed a Letter of Complaint with Texas Industries, Inc. for violations of RCRA Subtitle C regulations.[119]

Although seepage from the old landfill was observed only as localized pools, there exists a potential for contaminants to migrate beyond plant boundaries. First, the cap on the old disposal area can become eroded[120] and allow stormwater access to disposed CKD. Secondly, the old disposal pile is in close proximity (90 meters) to the East Branch of Cottonwood Creek. Uncontrolled run-off from the old disposal pile would flow into both Cottonwood Creek and adjacent Newton Creek.[121] Furthermore, the probability of an uncontrolled release of CKD into either creek would be highest during a storm event. The characteristic low permeability of soils (10^{-5} cm/sec)[122] within plant boundaries and in the immediate vicinity reduces the effect of rainfall infiltration into the ground, decreasing the volume of surface run-off during a storm event.

As a result of an inspection of both CKD disposal areas in March 1990, the TWC concluded a potential exists for contaminant release from the landfills.[123] TWC based its finding on the presence of the shallow (11 meter depth) water table. CKD in the active area is disposed on the quarry floor at a depth of 18 meters, which is below the level of the perched water table (11 meters).[124] In addition, the volume of disposed dust is high (estimated to be 28,350 cubic meters (37,059 cubic yards and nearby ponded water.[125] The shallow ground-water table combined with the high volume of waste in the active disposal area, the lack of a landfill liner, and the proximity of the active landfill to ponded water combine to create an "unknown potential" for release.[126]

5.3.2 Holnam, Inc., Artesia, Mississippi

The Holnam facility is located in Lowndes County, about 5 kilometers (km) (3.1 miles) south of Artesia, Mississippi along Route 45. Facility property encompasses an estimated 120 hectares (300 acres) and is partly located in the 100-year flood plain. The surrounding land use is predominantly rural and agricultural. In 1990, an estimated 60 residents lived within two kilometers of the facility property boundary, with the nearest residence located 900 meters (2,953

---

[119] U.S. Environmental Protection Agency, Region 6, 1992. *Complaint, Compliance Order, and Notice of Opportunity for Hearing in the Matter of Texas Industries, Inc.* Docket Number RCRA VI-203-H. September 30, 1992.

[120] Texas Water Commission, 1992. Personal communication with Sam Barrett, Field Investigator. November, 1992.

[121] Texas Water Commission, 1993. Personal communication with Sam Barrett, Field Investigator. July, 1993.

[122] Texas Industries, Inc., 1992. *Part B Permit Application. op.cit.*

[123] Texas Water Commission, 1990. RCRA Facility Assessment Facility Checklist, *op.cit.*

[124] *Ibid.*

[125] *Ibid.*

[126] *Ibid.*

feet) to the northwest. At least one private drinking water well is located within the facility's boundary.[127]

Holnam's Artesia facility utilizes one wet process kiln with a 454,000 metric ton (500,440 ton) capacity to produce clinker. In 1992, the plant produced 426,670 metric tons of clinker while burning coal (95,750 metric tons) almost exclusively for its energy needs. The facility started burning hazardous waste as a fuel supplement in June, 1993.[128]

Non-waste derived CKD at Holnam is disposed in an abandoned, water-filled quarry located northeast of the kiln. An estimated 253,000 metric tons of CKD is landfilled in the quarry along the eastern edge. Two other waste CKD disposal areas also exist within facility boundaries at Holnam. A large, older CKD disposal area, with an indeterminate amount of CKD, is located 300 meters east of the active disposal area. In 1993, Holnam created a new disposal area 9 to 12 meters south of the quarry disposal area, to manage hazardous waste-derived CKD.

The quarry lake is filled to a depth of 3.2 meters with 632,000 kiloliters (167 million gallons) of water, comprised of rain water and industrial process water. Water from the quarry lake is pumped to make raw-material slurry and process water for the wet scrubbers. Industrial process water, originating from the clinker cooler scrubber, flows into the quarry from a discharge point located on the southwest side of the quarry lake.[129] Stormwater run-off from the quarry lake discharges via an NPDES permitted outfall into a tributary of the South Branch.[130] Exhibit 5-15 shows the Artesia site.

In May 1993, while collecting samples of CKD and clinker, the Agency measured elevated levels of pH, in surface waters and discharge points within the property boundaries of Holnam's Artesia facility. The pH of water in the quarry lake (described in Agency field notes as a settling pond) was measured at 11.0 at a point along the northeast corner of the abandoned quarry where grading permitted access to the edge of the water. In an open culvert near the discharge point into the quarry lake, clinker cooler water had a measured pH of 11.6. Water in a retention basin at the site of the old CKD waste pile had a measured pH of 11.2.[131] The Agency has no data regarding the potential for release at this site.

---

[127] Portland Cement Association, 1991. PCA CKD Survey: Response from Holnam, Inc., Artesia, Mississippi.

[128] United States Environmental Protection Agency, 1993. Unpublished field notes from Phase II CKD sampling trip. May 25, 1993.

[129] U.S. Environmental Protection Agency, 1993. Unpublished field notes collected during visit to Holnam, Inc., Artesia, Mississippi, May 25, 1993.

[130] State of Mississippi, 1992. Permit for stormwater run-off for Holnam, Inc., Artesia, Mississippi; NPDES Permit No. MSR320017.

[131] U.S. EPA, 1993. Unpublished field notes collected during CKD sampling visit to Holnam, Artesia, Mississippi. *op.cit.*

5.3.3 Markey Machinery Property, Seattle, Washington

The Markey Machinery Property site is a rectangular, 1.8 hectare (4.4 acre) CKD landfill on industrial property within the city limits of Seattle, Washington.[132] Between 1977 and 1978 an estimated 38,250 cubic meters (m^3) (50,000 cubic yards [yd^3]) of CKD was disposed on the property

[132] GeoEngineers, Inc., 1989. *Environmental Site Assessment, CKD Landfill, Markey Machinery Property, Seattle, Washington.* Prepared for Helsell, Fetterman, Martin, Todd, & Hokanson. August, 1989.

Exhibit 5-15

Site Diagram – Holnam, Inc., Artesia, Mississippi

as fill, allegedly by Ideal Cement.[133] The site, an old truck park, is located within 1,220 meters (4,003 feet) of the Duwamish River, which is classified as a fishery by the State.[134] Although properties immediately adjacent to the site are industrial,[135] there is a nearby population of over 2,600 residents within 0.8 kilometers (0.5 miles) of the site.[136]

The site is immediately adjacent to surface drainage. Along the north boundary is the eastward flowing Ham Creek, which intersects the Duwamish River further downstream. The

---

[133] *Ibid.*

[134] Department of Ecology, State of Washington, 1992. *Site Hazard Assessment, Markey Property, Parcel 4, south 96th Street/10th Avenue South, Seattle, Washington.* September, 1992.

[135] GeoEngineers, Inc., 1989. *op.cit.*

[136] Department of Ecology, State of Washington, 1992. *op.cit.*

east boundary of the site is marked by a ditch with intermittent flow which drains into Ham Creek.[137] Total annual rainfall averages nearly 86 cm (34 inches).[138] The vertical depth to ground water at the site is less than eight meters.[139] The site is shown in Exhibit 5-16.

Exhibit 5-16

Site Diagram – Markey Machinery Property, Seattle, Washington

Analyses of four samples of CKD collected from test pits at the site in 1989, showed elevated concentrations of heavy metals, including arsenic, cadmium, copper, lead, and zinc that were higher than for uncontaminated soils.[140] Two of these samples were collected at locations along the southern margin of the landfill at the furthest distance away from the overlying waste

---

[137] GeoEngineers, Inc., 1989. *op.cit.*

[138] Department of Ecology, State of Washington, 1992. *op.cit.*

[139] *Ibid.*

[140] GeoEngineers, Inc., 1989, *op.cit.*

debris. Levels of lead (960-1,730 ppm) and arsenic (150-210 ppm) in samples of CKD from the Markey site exceed State soil cleanup standards specified in the Model Toxics Control Act (lead: 250 ppm, arsenic: 20 ppm).[141] Levels of cadmium (1.6-3.8 ppm) exceed the State soil cleanup standard (2.0 ppm)[142] in three out of four samples.[143] The average pH of laboratory leachate from the four samples is highly alkaline (12.4) and just below the State Dangerous Waste criterion of 12.5.[144]

Analyses of ground-water samples collected in 1989 showed the concentrations of dissolved metals to be below established drinking water limits. At the same time, the level of lead in the wells ranged from less than 5 ppb to 8 ppb,[145] and slightly exceeded the State cleanup level for ground water (5.0 ppb)[146] in three out of four wells. Analysis of water level measurement in four ground-water monitoring wells at the site suggests the predominant flow of shallow ground water is northeast toward Ham Creek.[147]

Analysis of surface water has shown the impact of the presence of CKD at Markey Property. A surface water sample collected in 1989 from the ditch along the eastern boundary had an elevated pH of 10.2 and a concentration of lead (0.36 ppm) 24 times the Federal limit for drinking water (0.015 ppm; conversion assumes the density of water to be 1.0 g/cm^3).[148] A sample of standing water along the southern boundary of the site had an alkaline pH of 9.4, and a concentration of lead (0.025 ppm).

The State of Washington Department of Ecology has ranked the Markey Property CKD landfill site a "3" on a scale of one to five, with one representing the highest level of concern and five the lowest.[149] The ranking is a measurement of potential risk to human health and the environment relative to other contamination sites in the State.[150]

---

[141] Department of Ecology, State of Washington, 1991. *The Model Toxics Control Act Cleanup Regulation, Chapter 173-340 WAC.* As Amended, February, 1991. p. 108.

[142] *Ibid.*

[143] GeoEngineers, Inc., 1989. *op.cit.*

[144] *Ibid.*

[145] GeoEngineers, Inc., 1989. *op.cit.*

[146] Department of Ecology, State of Washington, 1992. *The Model Toxics Control Act Cleanup Regulation, Chapter 173-340 WAC. As amended.* February, 1992. p. 93.

[147] *Ibid.*

[148] GeoEngineers, Inc., 1989. *op.cit.*

[149] Department of Ecology, State of Washington, 1992. *Site Hazard Assessment, Markey Property, Parcel 4, South 96th Street/10th Avenue South, Seattle, Washington.* September, 1992.

[150] Department of Ecology, State of Washington, 1992. *Washington Ranking Method, Scoring Manual.* As amended. April, 1992.

Several site characteristics contribute to release potential at the Markey Property site, including: 1) the quantity of CKD used as fill (38,250 m^3); 2) the lack of run-on or run-off controls, cover, liner, or leachate containment system at the site; 3) the site's close proximity to populated areas; and, 4) the close proximity of the site to environmentally sensitive surface waters such as the Duwamish River.[151] Enhancing the potential risk that this site poses to human health and the environment are confirmed releases of lead to surface and ground waters around the site.[152]

5.4 DOCUMENTED AIR DAMAGES

In addition to examining documented cases of damage to surface- and ground-water, EPA reviewed available information for evidence of damage to the air media. In most cases, the standard of proof of air damage was an administrative ruling in the form of an NOV of a State or Federal regulation, issued by a State or Federal inspector[153]. For many cases, however, although the Agency was provided with anecdotal information from an interview with a State official, the Agency was unable to locate sufficient documentation to qualify them as damage cases. Additionally, air damage information was gleaned from Hazardous Waste Site Preliminary Assessment forms. The cases that met the standard of proof and the other cases that are less well-documented suggest that cement kilns can be a significant cause of localized air quality problems.

In conducting this study, EPA identified 21 incidents at 12 facilities that met one of the tests of proof. NOVs were issued for these incidents, with three cases eventually settled through a judicial settlement. Six of these facilities have received more than one NOV. With the exception of two cases associated with the accumulation of fugitive dust, all of the cases were associated with visible emission violations (opacity) related to equipment and process malfunctions associated with the dust management system. This usually involved the baghouse, clinker cooler, or dust screw conveyors. The 21 incidents that meet the test of proof are outlined in Exhibit 5-17, Summary of Air Damages.

In general terms, if a visual inspection performed according to Method 9[154] shows opacity to be in excess of 20 percent, the facility is found to be in violation. Most states have adopted the standard of 20 percent, with some states promulgating more stringent standards, such as 10 percent.

Opacity limits are independently enforceable standards set out in the Clean Air Act (see 40 CFR, Part 60, New Source Performance Standards). Opacity is defined as the power of the plume to obscure a background. Opacity is also an indirect measure of particulate matter. EPA uses opacity as an indicator of a problem with the combustion process or an air control device. Since high opacity correlates with high particulate matter, it may signify a health hazard. If

---

[151] Department of Ecology, State of Washington, 1992. Site Assessment, Markey Property. *op.cit.*

[152] *Ibid.*

[153] In many cases it was difficult to discern whether CKD was the source of the violation, since some notices merely listed the air control rule that was violated. Where there is no description linking CKD to the violation, the cases are not considered documented damage cases.

[154] 40 *CFR* 60.60.

opacity is high, EPA will ask for a compliance test to see if the facility meets the PM10 standard[155].

[155] This stack test measures the size of particulate matter.

Exhibit 5-17

Summary of Air Damage Case Findings

SITE	DESCRIPTION OF VIOLATION	TEST OF PROOF	REGULATING AUTHORITY
Atlantic Cement Company, Ravena, NY	Opacity of kiln stack emissions exceeded 20 percent for a total of 29.3 minutes during an observation time of 60 minutes. The highest opacity was 81 percent.	N.O.V. October 21, 1983	USEPA Region 2 issued N.O.V. NY State Department of Environmental Conservation took enforcement lead
Hercules Cement Company Stockertown, PA	State determined that emissions from the baghouse dust disposal area exceeded the limits of the State's Air Pollution Control Rules and Regulations[a]	N.O.V./Consent Order April 21, 1978	Pennsylvania Department of Environmental Resources
Keystone Portland Cement Bath, PA	Between May 22, 1979 and February 1, 1980, the State observed and notified the company of various particulate emissions, fugitive particulate emission, and visible emission violations caused by point and area air contamination sources: clinker discharge, rock dump, kiln No. 2 waste dust tank, finish mills, No. 2 cement kiln seal, dust dump, raw material storage, No. 1 kiln waste dust system and plant roadway.[b]	N.O.V./Consent Order August 27, 1980	Pennsylvania Department of Environmental Resources
Blue Circle, Atlanta, GA	Excessive opacity from Kiln #1 expansion joint; 20 percent opacity. "Probable" violation of emissions standard at kiln baghouse exhausts. Inspection resulted from citizen complaints of particulate matter collecting on cars, swimming pool, lawn chairs and other items outside homes, originating at Blue Circle.	N.O.V. August 10, 1990 N.O.V. September 25, 1987	Georgia Department of Environmental Resources
Holnam, Inc., Holly Hill, SC	Visible emissions exiting from cement kiln #1 and #2 were observed exceeding the maximum allowable State and Federal limit of 20% opacity. The clinker dust and/or emissions from the baghouse were observed exceeding the maximum allowable 10% opacity.	N.O.V. July 16, 1991 N.O.V. July 11, 1991	South Carolina Department of Health and Environmental Control

Exhibit 5-17 (continued)

Summary of Air Damage Case Findings

SITE	DESCRIPTION OF VIOLATION	TEST OF PROOF	REGULATING AUTHORITY
Santee Cement Company (now Holnam, Inc.) Holly Hill, SC	Opacity excess emissions totalling approximately 12% for the quarter (14,011 minutes) due to equipment/process malfunctions associated with kiln #2.	N.O.V. May 15, 1990	South Carolina Department of Health and Environmental Control
	Opacity excess emissions 13.2% of the quarter (17,605 minutes) due to equipment/process malfunctions associated with kiln #2.	N.O.V. February 26, 1990	
	Opacity emissions in excess of 20% were observed being emitted from kiln #1 for more than six minutes in a one hour period.	N.O.V. August 10, 1989	
Giant Cement Harleyville, SC	In excess of opacity limits from the stack serving kiln #4 and #5 and from the clinker handling and storage area.	N.O.V./Consent Order February 20, 1991	South Carolina Department of Health and Environmental Control
Lafarge Corporation Alpena, MI	Excessive visible emissions from pugmill/pelletizer used to mix CKD and water. This process was observed in operation and visible emissions readings were conducted of the CKD pellets dropping off the conveyor and onto the disposal pile. 76.67% opacity.	N.O.V. August 5, 1991	Michigan Department of Natural Resources
Lone Star Industries Cape Girardeau, MO	Opacity was found to be in excess of 15% from clinker cooler and in excess of 30% from the main kiln stack. This was in violation of the court settlement described below between DNR and Lone Star.	N.O.V. February 4, 1991	Missouri Attorney General (Missouri Department of Natural Resources)
	Existing air pollution control equipment was not of sufficient size to handle periods of high dust loading. Lone Star was violating State's opacity regulation as well as New Source Performance Standards.[e]	Court Settlement September 24, 1990	Missouri Department of Natural Resources

Exhibit 5-17 (continued)

Summary of Air Damage Case Findings

SITE	DESCRIPTION OF VIOLATION	TEST OF PROOF	REGULATING AUTHORITY
Lone Star Industries Pryor, OK	A sizable accumulation of baghouse waste dust was present on the property outside of the building. In violation of Oklahoma air pollution control regulations governing fugitive dust.	N.O.V. October 3, 1990	Oklahoma State Department of Health
Holnam, Inc. Ada, OK	Excessive particulate emissions from kiln dust storage area blowing off of plant property.	N.O.V. July 23, 1991	Oklahoma State Department of Health
National Cement Lebec, CA	Excessive emissions from kiln baghouse. Emissions ranged from 40 to 100% opacity.	N.O.V. October 7, 1992	Kern County, California Air Pollution Control District
Kaiser Cement (now Mitsubishi Cement) Lucerne Valley, CA	Particulate emissions from baghouse controlling kiln emissions, above allowable limits.	N.O.V. September 23, 1987	San Bernadino, California Air Pollution Control District
Calveras Cement Co. Monolith, CA	Excessive dust from ductwork carrying gases from kiln to baghouse; grey plume 20%-40% opacity. Excessive emissions from chute to kiln baghouse; 60%-100% opacity. Excessive emissions from dust collection bin west of rotary kiln; 35%-50% opacity.	N.O.V. August 5, 1992 N.O.V. February 7, 1992 N.O.V. August 22, 1991	San Joaquin Unified Air Pollution Control District (Kern Co., CA)

[a] Hercules agreed to install air pollution control equipment to eliminate dust emissions from the baghouse area.

[b] Keystone Portland agreed to take corrective measures to keep the above-described emissions to a minimum.

[c] Settlement between Missouri Department of Natural Resources, the State Attorney General, and Lone Star. In order to satisfy the regulations and ensure they could meet the regulation, Lone Star undertook an agreement to reduce emissions by 100 tons per year through the installation of new air pollution control equipment. The agreement provided for a 30 percent opacity limit until new air pollution control equipment was installed.

EPA also identified 50 citizen complaint forms from the files of three states aimed at seven different cement kiln plants. In the case of the Blue Circle Cement plant in Atlanta, Georgia, such complaints resulted in an NOV (Exhibit 5-17). In this case, a number of citizens in the vicinity of the cement plant complained of particulate matter originating at the plant, collecting on their cars, lawn chairs, window sills and other items located outside of their homes.

Although at the time of the inspection, the opacity of the plume did not appear excessive, considering the large exhaust area of the baghouse monitors to the atmosphere, State officials concluded that mass emissions probably exceeded Georgia Air Quality Rules. Generally, the other citizen complaints were similar in nature to those received for Blue Circle Cement.

In addition, nine citizens complained of respiratory problems believed to be associated with emissions originating from the cement kiln plant. The health complaints were unsubstantiated, however.

5.5 CKD MANAGEMENT SCENARIOS OF CONCERN

There are a few CKD management scenarios which may pose a high calculated risk under specific reasonable worst case conditions. These situations are highlighted below. The risks associated with these scenarios are described in more detail in Chapter 6. While they are believed to be relatively infrequent, they are, nevertheless, plausible given the range of observed concentrations of constituents in CKD.

In particular, disposal of CKD in exposed, unlined piles that are adjacent to actively tilled agricultural fields may present higher risks (Exhibit 5-18). Analysis shows there is a greater potential for risk through the foodchain from the ingestion of vegetables, meat, milk, and soil contaminated by arsenic and dioxins through atmospheric deposition of CKD from nearby piles. The close proximity of an active agricultural field to the exposed CKD pile has been observed twice in the course of EPA site visits.

The Agency is also concerned about the practice of management of CKD underwater, and in quarries, in particular. CKD disposal in a quarry that later filled with water is a prominent factor in two cases of documented damage, one of which is a National Priorities List Superfund site. Investigations at these sites noted that CKD-contaminated waters were likely sources of contamination of surrounding surface waters and groundwaters.

Although the Agency's calculated risk associated with the management of CKD under water is low, the Agency did not assume karst topography (an irregular topography with sinks, underground streams, and caverns) when it modeled CKD management underwater in quarries. This risk could be higher in scenarios where CKD is managed in areas with limestone bedrock and karst topography. Cavernous limestones are highly jointed and fractured and can conduct large volumes of groundwater rapidly for significant distances. Water-CKD mixtures migrating through cavernous limestones can enter shallow groundwater bodies with little or no attenuation, exposing to risk all nearby population that may drink the water and degrading the environmental quality of nearby groundwaters and surface waters.

Exhibit 5-18

Example of CKD Disposal Adjacent to an Agricultural Field

CHAPTER FIVE

DOCUMENTED DAMAGES FROM MANAGEMENT OF CKD

5.0 INTRODUCTION AND METHODOLOGY 1
"Tests of Proof" 1
Identification of Prospective Damage Cases 2
Information Collection 2
Damage Case Preparation and Review 3
Limitations of the Damage Cases 3

5.1 OVERVIEW OF FINDINGS, TRENDS, AND CONCLUSIONS 4
5.1.1 Findings 4
5.1.2 Overall Trends and Conclusions 5

5.2 DOCUMENTED GROUND AND SURFACE WATER DAMAGE CASE SUMMARIES 9

Cases of Documented Damage 9
5.2.1 Holnam Incorporated, Mason City, Iowa 9
5.2.2 Lehigh Portland Cement Company, Leeds, Alabama 14
5.2.3 Lehigh Portland Cement Company, Mason City, Iowa 17
5.2.4 Portland Cement Company, Salt Lake City, Utah 22

5.2.5 Southwestern Portland Cement (Southdown, Inc.), Fairborn, Ohio 26
5.2.6 National Gypsum Co./Lafarge Corp., Alpena, Michigan 32
5.2.7 Ash Grove Cement West, Montana City, Montana 34
5.3 CASES OF POTENTIAL DAMAGE TO GROUND AND SURFACE WATER 37
5.3.1 Texas Industries, Inc., Midlothian, Texas 37

5.3.2 Holnam, Inc., Artesia, Mississippi 40
5.3.3 Markey Machinery Property, Seattle, Washington 41

5.4 DOCUMENTED AIR DAMAGES 45
5.5 CKD MANAGEMENT SCENARIOS OF CONCERN 49

LIST OF EXHIBITS

Exhibit 5-1
Summary of Cases of Documented and Potential Damage to Human Health and/or Environmental 4
Exhibit 5-2
Summary of Documented Water Damages 6
Exhibit 5-3
Cases of Potential Damage 8
Exhibit 5-4
Site Diagram – Holnam Incorporated, Mason City, Iowa 10
Exhibit 5-5
Site Diagram – Lehigh Portland Cement Company, Leeds, Alabama 15
Exhibit 5-6
Site Diagram – Lehigh Portland Cement Company, Mason City, Iowa 18
Exhibit 5-7
Site Diagram – Lime Creek Nature Center (Lehigh Portland Cement), Mason City, Iowa 19
Exhibit 5-8
Site Diagram – Portland Cement Company, Salt Lake City, Utah 24
Exhibit 5-9
Site Diagram – Southwestern Portland Cement, Fairborn, Ohio 28
Exhibit 5-10
Summary of Exceedances[a] of State Metals Limits Southwestern Portland Cement - Fairborn, Ohio Landfill #6 29
Exhibit 5-11
Site Diagram – National Gypsum Co./LaFarge Corp., Alpena, Michigan 33
Exhibit 5-12
Summary of Exceedances of State Metals Limits National Gypsum Co./Lafarge Corp., Alpena, Michigan 34
Exhibit 5-13
Site Diagram – Ash Grove Cement West, Montana City, Montana 36
Exhibit 5-14
Site Diagram – Texas Industries, Inc., Midlothian, Texas 38
Exhibit 5-15
Site Diagram – Holnam, Inc., Artesia, Mississippi 42
Exhibit 5-16
Site Diagram – Markey Machinery Property, Seattle, Washington 43
Exhibit 5-17
Summary of Air Damage Case Findings 46
Exhibit 5-18
Example of CKD Disposal Adjacent to an Agricultural Field 50

CHAPTER SIX

POTENTIAL DANGER TO HUMAN HEALTH AND THE ENVIRONMENT

6.0 INTRODUCTION 6-1

Purpose and Scope 6-1

Overview of Approach 6-2

Major Results and Conclusions 6-4

6.1 INITIAL RISK SCREENING 6-6

6.1.1 Approach and Methods 6-6

CKD Composition Data 6-6

Risk-Screening Criteria 6-7

Other Constituent-Specific Factors 6-10

6.1.2 Risk-Screening Results 6-11

6.2 EVALUATION OF RISKS WHEN CKD IS MANAGED ON SITE 6-14

6.2.1 Risk Potential Ranking of Initial Case Studies 6-15

Approach and Methods 6-15

Results of Risk Potential Ranking 6-19

Risk Potential Ranking for the Ground-water Pathway 6-20

Risk Potential Ranking for the Surface Water Pathway 6-23

Risk Potential Ranking for the Air Pathway 6-26

6.2.2 Risk Modeling of On-site CKD Management 6-29

Analytical Methodology 6-29

Release, Fate, and Transport Modeling Methodology 6-32

Characterization of Exposed Populations 6-34

Exposure Assessment and Risk Characterization 6-35

Sensitivity Analysis of Higher Risk Potential Scenarios 6-38

Results of On-site Risk Modeling 6-40

Baseline On-site CKD Management 6-40

Sensitivity Analysis of Potentially Higher Risk Scenarios 6-45

6.2.3 Summary of Risks from On-site CKD Management 6-51

Ground-Water Risks 6-51

Surface Water Risks to Human Health 6-52

Aquatic Ecological Risks 6-52

Air Pathway Risks from Windblown Dust 6-52

6.3 EVALUATION OF RISKS FROM OFF-SITE BENEFICIAL USES OF CKD 6-53

6.3.1 Approach and Methods 6-54

6.3.2 Hazardous Waste Stabilization and Disposal 6-54

6.3.3 Sewage Sludge Treatment and Use 6-56

6.3.4 Building Materials Addition 6-57

6.3.5 Road Construction 6-58

Analysis of Risk Factors 6-58

Risk Modeling Results for Unpaved Traffic Surfaces 6-59

6.3.6 Agricultural Liming 6-60

Analysis of Risk Factors 6-60

Risk Modeling Results for Liming 6-62

6.3.7 Summary of Risks from Off-site Beneficial Uses 6-63

LIST OF EXHIBITS

Exhibit 6-1 Overview of Risk Assessment Methodology 6-3

Exhibit 6-2 Basis for Risk-Screening Criteria 6-9

Exhibit 6-3 CKD Constituents That Exceeded Risk-Screening Criteria at EPA Sample Facilities 6-12

Exhibit 6-4 Comparison of 15 Sample Facilities to Other Facilities 6-16

Exhibit 6-5 Site Specific Factors Used to Evaluate Risk Potential of On-Site CKD Management 6-18

Exhibit 6-6 Risk Potential Rankings for the Ground-water Pathway 6-21

Exhibit 6-7 Risk Potential Rankings for the Surface Water Pathway 6-24

Exhibit 6-8 Particle Size Distribution of CKD by Kiln Type 6-27

Exhibit 6-9 Risk Potential Rankings for the Air Pathway 6-28

Exhibit 6-10 Graphical Illustration of On-site Risk Modeling Scenarios 6-31

Exhibit 6-11 Aquatic Ecological Benchmark Levels 6-38

Exhibit 6-12 Baseline On-Site Management Cancer Risks for Direct Exposure Pathways for 15 Case Study Facilities 6-41

Exhibit 6-13 Baseline On-Site Management Cancer Risks for Foodchain Exposure Pathways for 15 Case Study Facilities 6-42

Exhibit 6-14 Constituents Contributing to Adverse Health Effects In On-site CKD Risk Modeling Analysis 6-43

Exhibit 6-15 Results of Central Tendency and High End Ecological Effects Analysis 6-45

Exhibit 6-16 Sensitivity Analysis of Maximum CDD/CDF Cancer Risks for Direct Exposure Pathways 6-46

Exhibit 6-17 Sensitivity Analysis of Maximum CDD/CDF Cancer Risks for Foodchain Exposure Pathways 6-47

Exhibit 6-18 Sensitivity Analysis of Location Adjacent to Agricultural Field for Foodchain Exposure Pathways 6-48

LIST OF EXHIBITS (cont.)

Exhibit 6-19 **Sensitivity Analysis of Location Adjacent to Surface Water for Direct and Foodchain Exposure Pathways** 6-49

Exhibit 6-20 **Sensitivity Analysis of Highly Exposed Individuals for Foodchain Exposure Pathways** 6-50

Exhibit 6-21 **Off-site Beneficial Uses Examined in the Risk Assessment** 6-54

CHAPTER SIX

POTENTIAL DANGER TO HUMAN HEALTH AND THE ENVIRONMENT

6.0 INTRODUCTION

Section 8002(o)(3) of RCRA requires that EPA's study of CKD waste analyze potential danger to human health and the environment from disposal. In response to this requirement, EPA assessed the risks of potential releases of CKD contaminants to the environment, both during the routine management of the dust at cement plants and when the dust is beneficially used at other locations. This assessment relies heavily on the information developed on the amounts and characteristics of CKD generated (discussed in Chapter 3), CKD management practices (discussed in Chapter 4), and alternative CKD management practices and uses (summarized in Chapter 8). In addition, the risk assessment is intended to complement the damage case study presented in Chapter 5. The damage cases provide actual instances of environmental contamination, sometimes attributable to management practices and facility settings not considered in the risk assessment. The risk assessment covers the potential for certain more subtle or long-term risks that might not be evidenced in the damage case files.

This chapter summarizes the methods and results of EPA's risk assessment of CKD disposal and use. Additional details on various aspects of the study are provided in *Technical Background Document, Human Health and Environmental Risk Assessment in Support of the Report to Congress on CKD Waste* (referred to as the "Risk Assessment Technical Background Document" in the rest of this chapter). Before presenting the specific elements of the study, this section provides background on the purpose and scope of the risk assessment, as well as an overview of the study approach. This introduction also summarizes the major results and conclusions that are developed in greater detail in the remainder of the chapter.

Purpose and Scope

One of the primary objectives of the risk assessment was to investigate, as realistically as possible, the baseline risks of CKD management practices at actual sites. This was accomplished by focusing on a sample of case-study cement plants and off-site beneficial use scenarios that appeared to reasonably represent the universe of sites where CKD is disposed and used. For each sample site, EPA evaluated the potential for CKD contaminants to be released into the environment, migrate to possible human and ecological receptors, and result in exposures and adverse effects. This evaluation included a combination of qualitative analyses designed to document and describe major factors contributing to (or limiting) risks, and quantitative modeling designed to estimate the magnitude of risks. The study focused on the potential for releases and exposures through all media and pathways (ground water, surface water, air, and the food chain), and examined risks both to maximally exposed individuals and total populations around each case-study site.

Recognizing that potentially higher risk conditions may exist at other sites not included in the case-study sample, EPA designed the study to evaluate potential adverse effects under a variety of hypothetical scenarios. These scenarios were constructed by modifying the conditions evaluated at the case-study sites to reflect a reasonable worst-case set of waste characteristics, environmental settings, or CKD management practices.

Overall, the study examines the range of conditions that exist across the industry, while also focusing on those scenarios that have the greatest potential for adverse effects. The case studies are believed to fairly represent the range of risks that exist at "typical" sites. At the same time, to characterize the upper end of the risk distribution, priority was given to identifying and evaluating those management scenarios that pose the greatest threat.

Overview of Approach

The risk assessment approach consisted of three primary steps, as shown in Exhibit 6-1. First, the Agency conducted an "initial risk screening" of the chemical concentrations in CKD. Using EPA's sampling data for 20 cement plants, as well as data provided by industry, this screening compared chemical concentrations to a set of criteria. Concentrations that fell below these screening criteria were judged to pose a low or negligible risk that did not need further study. Conversely, concentrations above the criteria indicated that more detailed study was needed to determine the risks associated with certain CKD constituents, exposure pathways, and facility-specific waste streams under more realistic management conditions. This initial risk screening is summarized in Section 6.1.

Second, those constituents, exposure pathways, and CKD waste streams that could not be ruled out based on the initial risk screening were evaluated at a sample of actual cement plants. For each of the 15 plants visited during the 1992 sampling study, EPA collected site-specific data on a number of management practices and environmental factors that influence the potential for damage through releases to ground water, surface water, and air when the dust is managed on site at cement plants. Based on an analysis of these factors, the facilities were grouped into risk potential categories (negligible, low, moderate, and high) for each pathway. The Agency then performed quantitative modeling to estimate the human health and environmental risks at five of these 15 plants in order to estimate both central tendency and high end risks. In addition, the sensitivity of these modeled risk results to selected key parameters was examined in order to identify potentially higher risk management scenarios and environmental settings not captured by the 15 sample sites. Section 6.2 summarizes this evaluation of risks when CKD is managed on site at cement plants.

Third, those constituents, exposure pathways, and CKD waste streams that the initial risk screening could not exclude from further study were evaluated in the context of off-site beneficial uses. The Agency reviewed data on the nature, extent, and location of off-site CKD uses to identify five case studies for further risk analysis. These cases represented five major categories of off-site use: 1) hazardous waste stabilization and disposal, 2) sewage sludge stabilization and use, 3) building materials addition, 4) road construction, and 5) agricultural liming. EPA collected data on major risk factors for each case study to determine the potential for adverse effects and to prioritize the beneficial use categories for quantitative modeling. Hypothetical scenarios designed to represent the two categories that appeared to pose the highest risk were then developed and modeled for the purpose of risk estimation. This analysis of off-site beneficial uses is presented in Section 6.3.

Exhibit 6-1

Overview of Risk Assessment Methodology

Major Results and Conclusions

Major results and conclusions from the evaluation of potential danger to human health and the environment from the management of CKD are presented below.

- The pH of CKD leachate measured in laboratory tests typically ranged from 11 to 13. High pH levels in ground water and surface water may result in a variety of adverse effects, including the mobilization of certain metals and other constituents that could pose toxicological problems, human tissue burns (at pH levels above 12.5 or more), corrosion in pipes, and objectionable taste in drinking water. In addition, high pH levels could cause a wide variety of adverse ecological effects.

- Seventeen radionuclides were found in detectable concentrations in CKD, including members of the naturally occurring uranium-238 and thorium-232 decay chains and anthropogenic radionuclides that have been dispersed throughout the environment along with fallout from nuclear weapons tests. The concentrations of these radionuclides in CKD, however, are not elevated compared to the range of natural background levels, and modeling results for those nuclides with the highest potential for adverse health effects showed negligible risk.

- Based on a detailed qualitative review of site-specific risk factors at 15 representative cement plants, on-site CKD handling and disposal does not appear to have a high potential for adverse human health and environmental risks. However, selected risk factors, observed or reported at these or other cement plants, required more detailed qualitative evaluations.

- Quantitative risk modeling of case-study plants yielded central tendency risk estimates for cancer and noncancer health effects that were below levels of concern. Of the seven potential exposure pathways examined in this baseline analysis, including direct contact and indirect foodchain pathways, estimated increased individual cancer risks never exceeded a level of $1x10^{-6}$ (most pathway risks never exceeded $1x10^{-8}$). The noncancer hazard estimates were always less than one order of magnitude of the noncancer effects threshold.

- Modeling estimates of high end risks from on-site management indicated a greater potential for human health effects. High end facility cancer risks due to recreational exposures to surface water reached an upper bound value of $2x10^{-5}$; the ingestion of vegetables grown in agricultural fields contaminated by CKD reached an upper bound cancer risk of $3x10^{-6}$, and consumption of recreationally-caught fish reached an upper bound risk of $4x10^{-5}$. The other high end direct and indirect exposure pathway estimates were all less than $1x10^{-6}$.

- Although the central tendency results for the baseline risk modeling analysis showed no exceedances of ambient water quality criteria or other aquatic ecological benchmarks, the high end results indicated a potential for aquatic ecological damages. The high end ecological risks reflect contributions of CKD from overland run-off, atmospheric deposition, and ground-water discharge all entering the receiving water body. While most of the high end results indicated that aquatic ecological benchmarks would be exceeded by small amounts for most constituents, two constituents (cadmium and chromium) exceeded benchmarks by

more than two orders of magnitude and two others (arsenic and lead) exceeded by a factor of ten or more.

- The sensitivity analysis of hypothetical but plausible (based on conditions infrequently observed) higher risk scenarios indicated a potential for more significant human health threats in a number of scenarios. These analyses indicated that the proximity to potential exposure points (such as agricultural fields and surface water bodies), high end concentrations of individual toxic constituents (such as dioxins, arsenic, or heavy metals), or the possible presence of extreme exposure situations (such as subsistence food consumption), would be major factors that could increase the potential for damages from CKD plants.

- Dioxins/furans did not contribute substantially to cancer risks for either the central tendency or high end plants in the baseline case studies. Sensitivity analysis, based on high end measured dioxin concentrations, also suggested negligible or low risks in the direct exposure pathways. However, for indirect foodchain pathways, high dioxin concentrations applied to base case plant settings increased central tendency cancer risks to levels as high as $1x10^{-4}$ and high end plant risks to as high as $1x10^{-3}$.

- Sensitivity analyses indicated that, other factors being equal, CKD units located adjacent to crop fields and pastures or surface water bodies (both settings having been observed in field site visits) would increase general health and/or aquatic resource damages by an order of magnitude or more over the base-case estimates.

- Although subsistence level food consumption exposure patterns were not observed in the field or otherwise reported to the Agency, sensitivity analyses incorporating these extreme indirect foodchain exposure situations yielded the highest estimated risks in the EPA studies. Although these subsistence consumption risks did not exceed levels of concern for the central tendency base case plants, when combined with any other high end risk factor, cancer risks typically exceeded $1x10^{-4}$ for subsistence fish consumption and $1x10^{-5}$ for subsistence farming.

- Off-site beneficial byproduct use of CKD as a stabilizing agent for hazardous waste, sewage sludge stabilizer, road sub-base, asphalt additive, and additive for building materials (e.g., concrete and masonry block) does not appear to pose significant risks to human health or the environment. Although there is some potential for releases of CKD contaminants and subsequent exposures when the dust is used in the construction of unpaved roads and parking lots, modeling of a parking lot scenario indicates that this risk should be small (predicted cancer risks of $1x10^{-7}$ or lower and noncancer risks of at least two orders of magnitude below effects thresholds for all potential exposure pathways).

- Utilization of CKD as an agricultural liming agent appears to pose more of a risk than other byproduct beneficial uses. The Agency's analysis indicated that cancer risks and noncancer effects could exceed relevant levels of concern in the foodchain pathway in several scenarios for those CKD sources with very high concentrations of arsenic and dioxins. While best estimate risks indicated a maximum exposure to a subsistence farmer of about $7x10^{-6}$ due to arsenic, the

upper bound risks in this exposure scenario reached a maximum of $2x10^{-4}$ as a result of dioxin exposures.

6.1 INITIAL RISK SCREENING

EPA started its risk assessment by comparing the concentrations of chemicals measured in CKD to a set of benchmarks, or "risk-screening criteria." These criteria were developed using accepted toxicity values and chemical release, transport, and exposure assumptions that represent reasonable mismanagement scenarios when CKD is managed on site at cement plants. EPA first compared chemical concentrations to the screening criteria to identify CKD constituents that need further study to determine if there is a potential to pose a human health or environmental risk when the dust is managed on site. The Agency then evaluated other chemical and physical properties (i.e., mobility and persistence in the environment, and normal background concentrations) that may tend to mitigate, intensify, or otherwise qualify the risks associated with those CKD constituents found at levels above the screening criteria.

The purpose of this initial risk screening was threefold:

- To identify individual CKD constituents that may have the potential to pose risks, and, if so, how pervasively across cement plants;
- To identify exposure pathways that are most likely to convey risks (ground water, surface water, air, and direct contact); and
- To identify CKD waste and product streams on a facility-specific basis that may have the potential to pose risks under reasonable mismanagement scenarios.

Those CKD constituents, exposure pathways, and CKD streams believed to pose a low or negligible risk based on the results of the risk screening could be excluded from further analysis. Conversely, those constituents, pathways, and CKD streams that could not be ruled out based on this initial screening would warrant a closer, site-specific assessment. The Agency then proceeded to analyze these constituents, pathways, and cement plants in more detail in subsequent steps of the risk assessment.

The remainder of this section summarizes the methods and results of this initial risk screening. More detail is provided in the Risk Assessment Technical Background Document. Section 6.1.1 provides a brief overview of the risk screening approach and methods. Section 6.1.2 presents the risk-screening results for different exposure pathways, and discusses their implications for subsequent steps in the risk assessment.

6.1.1 Approach and Methods

This section describes the CKD composition data, risk-screening criteria, and other constituent-specific factors used in the initial risk screening.

CKD Composition Data

For the purpose of the initial risk screen, EPA examined the concentrations of 25 dioxins and furans, 14 metals, 17 radionuclides, fluoride, and pH.[1] The screening focused primarily on concentrations measured during the Agency's 1992 and 1993 sampling study, introduced in Chapter 1. EPA believes that it is appropriate to focus this risk screen on its own sampling data (as opposed to data from the PCA Survey, PCA Reports, and Bureau of Mines) for three main reasons:

- EPA's data set is the only source of data on dioxins, furans, and radionuclides (the other sources do not provide any data on these constituents);
- The Agency data can be related in all instances to specific waste management practices and environmental settings for subsequent case-study purposes; and
- As discussed in Section 3.2.2 of this report, a statistical analysis indicates that the vast majority of calculated mean concentrations for metals in the EPA sampling data are not significantly different than the means from the other data sources.

Nevertheless, the Agency recognizes that the other data sources report higher concentrations of some metals than observed in the EPA sampling, and that limiting this initial risk screening to only the EPA sampling data might ignore some metal concentrations that would yield higher risk conclusions. Therefore, the risk screen also considered the full range of metal concentrations reported in the other data sources.

EPA's data set of constituent concentrations consists of a total of 45 CKD samples from 20 different cement plants, including ten facilities that burn hazardous waste as fuel and ten facilities that do not burn hazardous waste. Not all samples were analyzed for every constituent, however. Metals data (both totals and leach extract) are available for 15 facilities, and dioxins data are available for 11 facilities (although only six facilities have leachate data). The number of facilities for which radionuclide data are available ranges from seven to 20, depending on the particular radionuclide and test type. For this analysis, EPA did not differentiate between the "as generated" and "as managed" dust samples, but rather combined the sampling results (there were 24 "as generated" samples and 21 "as managed" samples). Similarly, the results from TCLP and SPLP extract analyses, discussed in Chapter 3, were not differentiated for the initial risk screen.

Leachate extract analyses were conducted for dioxins, furans, and radionuclides at the six cement plants examined in the 1993 sampling, but not at the 15 plants examined in 1992. The Agency filled this data gap by estimating leachate concentrations of these constituents for the 1992 sampling results. In particular, EPA determined the median ratio of total concentrations to leachate extract concentrations observed for each dioxin, furan, and radionuclide examined in the 1993 sampling, and then multiplied these ratios by the corresponding total concentrations observed in 1992. These estimated leachate concentrations were then pooled with the measured concentrations from 1993 for comparison to the risk-screening criteria.

Risk-Screening Criteria

---

[1] EPA also measured the concentrations of chloride, total organic carbon, total cyanide, sulfate, and sulfide in CKD totals analyses during the 1992 sampling. The Agency did not examine these chemicals in the risk screening, however, as there are no accepted toxicity values on which to base screening criteria.

Because this evaluation was intended to identify constituents, pathways, and CKD streams that warrant further analysis and rule out those that present negligible risk, EPA designed the screening criteria to be reasonably "conservative" to avoid false negative conclusions. That is, the criteria are based on release, transport, and exposure assumptions that are more likely to indicate risk than actual CKD management practices at cement plants.

Separate criteria were developed for four release and exposure pathways: ground water, surface water, air, and on-site direct contact. For the ground-water pathway, the Agency used two criteria to evaluate the potential for adverse health effects through drinking water exposures: one based on the drinking water primary Maximum Contaminant Levels (MCLs) and the other based on health-based levels (HBLs). Four criteria were used for surface water: two for evaluating the potential for human exposure through drinking water (based on the same MCLs and HBLs used for the ground-water criteria), one for evaluating the potential for aquatic ecological effects (based on the Ambient Water Quality Criteria), and one for evaluating the potential for human exposure through fish ingestion. One criterion was developed for the air pathway and the on-site direct contact pathway. The basis for each of the risk-screening criteria is summarized in Exhibit 6-2. The Risk Assessment Technical Background Document provides more detail on the derivation of these criteria, as well as the numerical values used for the different criteria.

An individual lifetime cancer risk of $1x10^{-5}$ was used as the basis for the screening criteria for carcinogens, indicating that the chance of an individual contracting cancer over a 70-year lifetime,[2] as a result of the exposure being assessed, is approximately 1 in 100,000. This risk level is consistent with EPA policy of selecting risk management targets between $1x10^{-4}$ and $1x10^{-6}$ (55 FR 8716; March 9, 1990). An individual cancer risk of $1x10^{-5}$ is appropriate for developing screening criteria in this context because the total population exposed to CKD is relatively small, and because using a lower target risk in conjunction with the conservative exposure assumptions underlying the screening criteria would unnecessarily compound the conservatism of the criteria. For example, assuming a 70-year exposure duration introduces substantial conservatism compared to the 9-year average exposure duration assumed in most current generic risk assessments (assuming a 9-year exposure would raise the screening criteria for carcinogens by a factor of almost eight). Using a higher target risk would be inappropriate because the screening analysis was designed to be reasonably conservative and to minimize false negatives.

To develop the ground-water and surface water pathway criteria, EPA used a dilution and attenuation factor (DAF) to account for the decrease in concentration that occurs as contaminants are released from a waste management unit, mix in the flow of ground water or surface water, and migrate to a location where a person, plant, or animal might be exposed. A DAF of 10 was used for the ground-water pathway and a DAF of 100 was used for the surface water pathway (i.e., adverse effect levels were multiplied by 10 for the ground-water criteria and by 100 for the surface water criteria). These are the same DAFs that EPA used in conducting a similar risk-screening analysis in the Report to Congress on Special Wastes from Mineral

---

[2] EPA assumed a 70-year exposure duration in developing the risk-screening criteria as one means of ensuring that the criteria are conservative (i.e., to help avoid false negative conclusions in this step of the analysis). In the risk modeling step of the analysis, EPA assumed an exposure duration of 9 years, which is the 50th percentile (median) duration of occupancy at one residence (*Exposure Factors Handbook*, U.S. EPA Office of Health and Environmental Assessment, EPA/600/8-89/043, July 1989). The Agency used 9 years in the risk modeling to develop a risk estimate that is more realistic than the conservative risk potential conclusions from the initial risk screen.

Processing.[3] The Agency believes that these factors account for a minimal amount of dilution and attenuation in ground water and surface water under reasonable CKD mismanagement scenarios.

[3] *Report to Congress on Special Wastes from Mineral Processing*, Volume II, Methods and Analyses, U.S. EPA Office of Solid Waste, July 1990.

Exhibit 6-2

Basis for Risk-Screening Criteria[a]

Screening Criterion		Major Underlying Assumptions and Parameters
Ground-water Pathway	10x Primary MCL	The Primary Maximum Contaminant Levels (MCLs) established for drinking water supplies are designed to be protective of human health. Ten times the primary MCL represents the constituent concentrations in CKD leachate that could result in an exceedance of the primary MCL (and the risk of associated adverse human health effects) if the leachate is released and migrates in ground water to a downgradient drinking water well with less than a 10-fold dilution. In the case of pH, the Agency used one standard unit above the upper bound of the secondary MCL (equivalent to a factor of 10) because there is no primary MCL. The secondary MCL for pH is intended to limit corrosivity and taste effects, not necessarily adverse health effects.
	10x Health-Based Level	The Agency developed health-based levels (HBLs) using chemical-specific toxicological values along with equations for calculating preliminary remediation goals for ground water at Superfund sites. These levels assume that an adult directly ingests contaminated ground water and inhales volatile contaminants from whole-house water use (such as from the shower or faucet). The HBLs are based on an individual lifetime cancer risk of $1x10^{-5}$ for carcinogens and noncancer effect thresholds for noncarcinogens. The Agency multiplied these HBLs by 10 to develop criteria that represent concentrations in CKD leachate that may pose health risks if leachate is released and migrates in ground water to a nearby drinking water well with less than a 10-fold dilution.
Surface Water Pathway	100x Primary MCL	These are the same MCLs used for the ground-water criteria, simply multiplied by 100 rather than 10 to account for greater dilution expected in surface water.
	100x Health-Based Level	These are the same HBLs used in deriving the ground-water criteria, but multiplied by 100 instead of 10.
	100x AWQC	When available, the Agency used chronic ambient water quality criteria (AWQC) for freshwater organisms. When AWQC were not available, the Agency derived "AWQC-like" values by extrapolating lowest observed adverse effect levels for chronic exposures of freshwater organisms. These criteria are designed to be protective of aquatic organisms (not humans), accounting for the potential for constituents to bioconcentrate and cause adverse effects through food chain exposures.
	Human Fish Ingestion Health Factor	The Agency developed human health screening criteria for contaminated fish ingestion using chemical-specific toxicological values and bioconcentration factors, along with equations for calculating exposure from the ingestion of contaminated fish at Superfund sites. The levels are based on an individual lifetime cancer risk of $1x10^{-5}$ for carcinogens and noncancer effect thresholds for noncarcinogens. The Agency multiplied these levels by 100 to develop criteria that represent concentrations in CKD leachate that may pose human health risks if constituents are released, migrate to a surface water with only a 100-fold dilution, and bioconcentrate in fish that are consumed by humans.
Air Release-Off-site Exposure Pathway		These criteria represent concentrations that, if CKD is suspended in air and transported to a downwind receptor location, could lead to an individual lifetime cancer risk of $1x10^{-5}$ or an exceedance of a noncancer effect threshold. The underlying assumptions are that particulates from a CKD pile are blown into the air by the wind, dispersed to a hypothetical "backyard gardener's" property located 230 meters (750 feet) away, and deposited onto soil and vegetables at that point. The receptor is then assumed to be exposed to CKD contaminants via four routes: (1) inhalation of particulates; (2) incidental ingestion of soil contaminated by airborne deposition of particulates (i.e., inadvertent ingestion of soils as a result of normal mouthing of objects or hands); (3) ingestion of leafy vegetables contaminated by deposited particulates; and (4) for radionuclides, exposure to direct radiation from the contaminated ground surface without any shielding.
On-site Direct Contact Pathway		These criteria are based on a highly conservative, hypothetical scenario in which an individual is assumed to live directly on uncovered CKD, and over a lifetime, incidentally ingests the dust, inhales particulates suspended into the air, inhales constituents that have volatilized from the dust, and is exposed to direct radiation with no shielding. No dilution is taken into account; the exposed individual is assumed to live directly on CKD, not CKD mixed with soil or any other material. The criteria are based on an individual lifetime cancer risk of $1x10^{-5}$ for carcinogens and noncancer effect thresholds for noncarcinogens. The Agency calculated these levels using equations and parameters developed for calculating preliminary remediation goals for soil at Superfund sites.

[a] See the Risk Assessment Technical Background Document for the numerical values used for each criterion and more detail on their derivation.

To develop appropriate screening concentrations for dioxins and furans, EPA followed the methodology presented in *Interim Procedures for Estimating Risks Associated with Exposures to Mixtures of Chlorinated Dibenzo-p-dioxins and -Dibenzofurans (CDDs and CDFs), 1989 Update.* According to this methodology, concentrations of 2,3,7,8-substituted CDDs and CDFs (i.e., CDDs and CDFs with a chlorine substituted on the 2, 3, 7, and 8 carbon atoms) are converted to equivalent concentrations of 2,3,7,8-tetrachlorodibenzo-p-dioxin (2,3,7,8-TCDD), the most potent carcinogen that has been evaluated by EPA. Equivalent concentrations of 2,3,7,8-TCDD for each 2,3,7,8-substituted congener[4] are calculated by multiplying the concentration of each 2,3,7,8-substituted congener by its respective toxicity equivalent factor (TEF). CDDs and CDFs that do not have chlorine substitutions at the 2, 3, 7, and 8 carbons are assigned a TEF of zero. After each congener is multiplied by its TEF, the concentrations for all the congeners are summed to determine the 2,3,7,8-TCDD equivalent for the mixture.

Other Constituent-Specific Factors

For those constituents found to exceed one of the risk-screening criteria, the Agency evaluated three other constituent-specific factors that may affect the potential for human health and environmental risks. These other factors were used to qualify the results of the criteria comparisons, not as a basis for excluding constituents of potential concern from the analysis. The values used in evaluating each of these factors are outlined in the Risk Assessment Technical Background Document.

First, the Agency evaluated each constituent's mobility in ground water[5] by examining its soil-water partition coefficient (K_d), which reflects the tendency of a chemical to attach to soil.[6] EPA evaluated this factor because, even though a constituent may exist in CKD leachate in relatively high concentrations, it may pose little or no risk to off-site receptors if it migrates very slowly in ground water.

Second, each constituent's persistence in the environment was evaluated. A constituent that degrades rapidly may not pose a substantial risk, even if it exists in relatively high concentrations. Many constituents present in CKD are elements that do not degrade in the environment. However, EPA evaluated the half-life of dioxins in ground water as reported in the U.S. Department of Energy's (DOE's) MEPAS database. The persistence of dioxins in air or surface water was not evaluated, because the travel time in these media to a possible exposure point is nearly instantaneous. For radionuclides, EPA used radioactive half-lives documented in the *Radiological Health Handbook* (1970) published by the U.S. Public Health Service.

---

[4] The term "congener" refers to any one member of the same chemical family. There are 75 congeners of chlorinated dibenzo-p-dioxins; seven of these have chlorine substituted at the 2, 3, 7, and 8 carbons. Likewise, there are 135 congeners of chlorinated dibenzofurans; ten of these have chlorine substituted at the 2, 3, 7, and 8 carbons.

[5] EPA assumed that all constituents would be mobile in surface water or air if released to these media.

[6] This partition coefficient, or K_d, represents the equilibrium ratio of a chemical adhering to soil that is present in ground water. The Agency reviewed each constituent's K_d as developed by EPA's Office of Research and Development (ORD) (documented in EPA's Corrective Action chemical database). If a value was not developed by ORD, K_d values were selected from the Department of Energy's *Chemical Data Bases for the Multimedia Environmental Pollutant Assessment System* (MEPAS). Both of these sources provide K_d values for different pH categories, and EPA selected values from the highest pH category to best represent conditions that are most likely to exist in CKD leachate.

Third, EPA evaluated the normal background concentrations of radionuclides in the environment. Most of the radionuclides detected in CKD are naturally occurring (such as members of the uranium-238 and thorium-232 decay chains), while others are anthropogenic but have become ubiquitous in the environment (such as cesium-137 and plutonium-238/239, which exist essentially everywhere due to fallout from nuclear weapons tests). The Agency reviewed background concentration data available in the literature and provided by DOE. If a radionuclide was found to exist in CKD in concentrations within the normal range found in the environment, it may not pose a risk that warrants special attention.

6.1.2 Risk-Screening Results

Although substantial variability was found in the concentrations of individual contaminants at the 20 facilities sampled, all 20 facilities had one or more constituents that exceeded the risk-screening criteria for every pathway. The constituents that exceeded screening criteria at each facility are presented in Exhibit 6-3.[7] (For additional detail, including the magnitude of exceedances at each facility, see the Risk Assessment Technical Background Document.) As shown, every facility had at least four constituents that exceeded the ground-water pathway criteria, at least one constituent that exceeded the surface water pathway criteria, and at least five constituents that exceeded the very conservative on-site direct contact criteria. In addition, every facility tested for metals had CKD that exceeded the air release off-site exposure criteria for at least one constituent.

Those facilities that burn hazardous waste as fuel are identified in Exhibit 6-3 with an asterisk. For the most part, the facilities that burn hazardous waste as fuel had the same constituents exceeding screening criteria by the same order of magnitude as the facilities that do not burn hazardous waste. However, dioxin, lead, chromium, pH, and Tl-208 levels at hazardous waste burners tended to exceed certain criteria by a slightly wider margin than at other facilities. Conversely, thallium, Bi-214, Pb-214, and Ra-226 concentrations tended to exceed the criteria by a slightly wider margin at facilities that do not burn hazardous waste.

In terms of the results for individual constituents, the initial risk screening suggests the following:

- Ground Water. The constituents needing further study for ground water are antimony, arsenic, thallium, and pH. Dioxins (2,3,7,8-TCDD equivalents), lead, beryllium, and cadmium also exceeded risk screening criteria, but these constituents are relatively immobile under the high pH conditions expected for CKD leachate (they would be expected to migrate readily only at sites where fractures or solution cavities exist in the subsurface). In addition, K-40, Ra-228, and U-238 exceeded the screening criteria, but these radionuclides appear to be present in CKD in concentrations that are within the range of background levels found in normal rock and soil.

[7] The absence of a chemical for a given facility in Exhibit 6-3 may be the result of a lack of data for that facility, rather than the result of low chemical concentrations that fall below the screening criteria. Specifically, dioxins were not analyzed at Facilities B, C, G, I, J, L, N, Q, and S. Metals were not analyzed at Facilities K, M, P, R, and T. Radionuclide data also are not available for every facility.

Exhibit 6-3

CKD Constituents That Exceeded Risk-Screening Criteria at EPA Sample Facilities[a]

Facility	Ground-water Pathway[b]	Surface Water Pathway			Air Release - Off-site Exposure Pathway[c]	On-site Direct Contact Pathway
		100x MCL or 100x HBL[b]	100x AWQC[b]	Fish Ingestion[b]		
Facility A*	Sb, As, Pb, K-40, pH	pH, K-40	Pb, pH	Tl	As, Cr	As, Pb, Bi-214, K-40, Pb-214, Ra-226, Ra-228, Tl-208
Facility B	As, Pb, Tl, K-40, pH	K-40, pH	pH	Tl	As, Cr	As, Be, Bi-214, Pb-214, K-40, Ra-226, Ra-228, Tl-208
Facility C*	As, Pb, K-40, pH	Pb, K-40, pH	Pb, pH		As, Cr	Pb-214, K-40, Ra-226, Ra-228, Tl-208
Facility D	Sb, As, Tl, K-40, U-238, 2,3,7,8-TCDD equiv., pH	Tl, U-238, TCDD equiv., pH	pH	Tl, 2,3,7,8-TCDD equiv.	As, Cr	As, Tl, Bi-214, Pb-214, K-40, Ra-226, Ra-228, Tl-208, 2,3,7,8-TCDD equiv., TCDD+TCDF
Facility E	Sb, As, Tl, K-40, pH	K-40, pH	pH	Tl	As, Cr	As, Pb-214, K-40, Ra-226, Ra-228, Tl-208
Facility F*	Sb, As, Pb, K-40, U-238, 2,3,7,8-TCDD equiv., pH	Pb, K-40, pH	Pb, pH	Tl, 2,3,7,8-TCDD equiv.	As, Cr	As, Pb, Pb-214, K-40, Ra-226, Tl-208
Facility G	Sb, As, Pb, Tl, K-40, pH	Pb, Tl, K-40, pH	Pb, pH	Tl	As, Cr	As, Bi-214, Cs-137, Pb-214, K-40, Ra-226, Ra-228, Tl-208
Facility H*	As, Pb, K-40, U-238, 2,3,7,8-TCDD, equiv., pH	Pb, K-40, U-238, pH, 2,3,7,8-TCDD equiv.	Pb, pH, 2,3,7,8,-TCDD equiv.	Tl, 2,3,7,8-TCDD equiv.	As, Cr, 2,3,7,8-TCDD equiv.	As, Pb, Pb-214, K-40, Ra-226, Ra-228, Tl-208, 2,3,7,8-TCDD equiv., TCDD+TCDF
Facility I*	Sb, As, Pb, Tl, Ra-228, K-40, pH	K-40, pH	Pb, pH	Tl	As, Cr	As, Bi-214, Pb-214, K-40, Ra-226, Ra-228, Tl-208
Facility J	Sb, As, Pb, Tl, Ra-228, K-40, U-238, pH	K-40, U-238, pH	pH	Tl	As, Be, Cd, Cr	As, Be, Bi-214, K-40, Pb-214, Ra-226, Ra-228, Tl-208
Facility K	K-40, U-238, 2,3,7,8-TCDD equiv.	K-40, U-238		2,3,7,8-TCDD equiv.		Bi-214, K-40, Pb-214, Ra-226, Ra-228, Tl-208
Facility L	Sb, As, Pb, Tl, K-40, pH	Tl, pH	pH	Tl	As, Cr, Tl	Tl, Bi-214, K-40, Pb-214, Ra-226, Ra-228, Tl-208
Facility M	K-40, U-238, 2,3,7,8-TCDD equiv.	U-238		2,3,7,8-TCDD equiv.		Bi-214, K-40, Pb-214, Ra-226, Ra-228, Tl-208

Exhibit 6-3 (continued)

CKD Constituents That Exceeded Risk-Screening Criteria at EPA Sample Facilities[a]

Facility	Ground-water Pathway[b]	Surface Water Pathway			Air Release - Off-site Exposure Pathway[a]	On-site Direct Contact Pathway
		100x MCL or 100x HBL[b]	100x AWQC[b]	Fish Ingestion[b]		
Facility N*	Sb, As, Pb, K-40, pH	Pb, K-40, pH	Pb, pH	Tl	As, Cr	As, Be, Pb, Bi-214, Pb-214, K-40, Ra-226, Ra-228, Tl-208
Facility O*	Sb, As, Pb, Tl, Ra-228, K-40, U-238, 2,3,7,8-TCDD equiv., pH	K-40, U-238, pH	Pb, pH	Tl, 2,3,7,8-TCDD equiv.	As, Be, Cr	As, Be, Pb, Bi-214, K-40, Pb-212, Pb-214, Ra-226, Ra-228, Tl-208
Facility P*	Ra-228, K-40, U-238, 2,3,7,8-TCDD equiv., pH	U-238, pH	pH	2,3,7,8-TCDD equiv.	Th-228	Bi-214, K-40, Pb-214, Ra-226, Ra-228, Tl-208
Facility Q	As, Tl, K-40, pH	Tl	Tl	Tl	As, Cr, Tl	As, Tl, Bi-214, Pb-214, K-40, Ra-226, Ra-228, Tl-208
Facility R*	K-40, U-238, 2,3,7,8-TCDD equiv., pH	K-40, U-238, pH		2,3,7,8-TCDD equiv.		Bi-214, K-40, Pb-214, Pb-212, Ra-226, Ra-228, Tl-208
Facility S*	Sb, As, Pb, Tl, K-40, pH	pH, K-40	pH	Tl	As, Cr	As, Bi-214, Pb-214, K-40, Ra-226, Ra-228, Tl-208
Facility T	Ra-228, K-40, U-238, 2,3,7,8-TCDD equiv., pH	K-40, U-238, pH	pH	2,3,7,8-TCDD equiv.		Bi-214, K-40, Pb-214, Ra-226, Ra-228, Tl-208

* Burns hazardous waste as fuel.

[a] Dioxins were not analyzed at Facilities B, C, G, I, J, L, N, Q, and S. Metals were not analyzed at Facilities K, M, P, R, and T. Radionuclide data also are not available for every facility.

[b] Metals data reported by industry (not developed by EPA) indicate that, in addition to the above exceedances, beryllium and cadmium occasionally exceed ground-water screening criteria, arsenic occasionally exceeds the HBL-based surface water criterion, and mercury occasionally exceeds the AWQC-based and fish ingestion criteria. Because the identity of the facilities exceeding the criteria for these constituents is not known, they could not be displayed in this exhibit.

- Surface Water. Dioxins and furans (2,3,7,8-TCDD equivalents), lead, thallium, arsenic, K-40, U-238, and pH need further study to determine their potential drinking water threats. Dioxin, lead, thallium, mercury, and pH levels exceeded the AWQC-based criteria and require further study to determine their potential for aquatic ecological risk. Considering the potential for these constituents to bioconcentrate in fish tissue, dioxins, thallium, and mercury could pose an added threat of human exposures through the fish ingestion pathway. Of these constituents, dioxins, lead, thallium, and mercury are relatively immobile in ground water (if fractures or solution cavities that facilitate flow do not exist) and thus would tend to migrate to surface water primarily by stormwater run-off or

atmospheric deposition, rather than via ground-water discharge. In addition, the surface water risks associated with K-40 and U-238 do not appear to be greater than the risks associated with natural background radioactivity.

- Air. The constituents needing further study to determine airborne releases and exposures include dioxins (2,3,7,8-TCDD equivalents), arsenic, beryllium, cadmium, thallium, and chromium (conservatively assuming all of the chromium in CKD is present in its more toxic hexavalent form). Th-228 also could pose a risk via the air pathway, but no more than the risk associated with natural background concentrations of this radionuclide.

- On-site Direct Contact. Dioxins, arsenic, beryllium, lead, thallium, and eight radionuclides may be present at some facilities in concentrations that may be harmful under the highly conservative scenario in which an individual lives directly on uncovered CKD. Although the radionuclides may pose a risk under this exposure scenario, this radiation threat should not be any greater than that associated with natural background radioactivity.

Based on these screening results, EPA concluded that more detailed study was needed to determine the risks of several CKD constituents, exposure pathways, and facility-specific waste streams. The Agency proceeded to evaluate these risks more closely by examining existing conditions at a sample of actual cement plants and off-site locations where CKD is beneficially used.

6.2 EVALUATION OF RISKS WHEN CKD IS MANAGED ON SITE

In the second step of the risk assessment, EPA conducted a closer examination of the cement plants and CKD constituents that were found to have the potential for risks in the initial risk-screening. The results of the preceding analysis of constituent concentrations in CKD were combined with a site-specific evaluation of CKD management practices and environmental settings at a sample of actual cement plants.

This more detailed evaluation of risks was conducted in two phases. First, EPA evaluated the "risk potential" at initial case-study facilities by analyzing a number of site-specific factors relating to the potential for on-site CKD management to pose risks via ground-water, surface water, and air pathways. The purpose of this evaluation was to document and describe the major factors contributing to or limiting risk at each case-study facility, and to prioritize the facilities for further analysis through quantitative modeling. This evaluation of risk potential is presented in Section 6.2.1.

Second, the Agency performed quantitative modeling to estimate the magnitude of risks associated with on-site CKD management at cement plants. In particular, site-specific modeling was performed to estimate the risks at case-study cement plants that could pose higher risks based on the preceding evaluation of risk potential. The Agency also modeled potentially higher risk scenarios not captured by the sample of cement plants considered in the evaluation of risk potential. This risk modeling of on-site CKD management is presented in Section 6.2.2.

6.2.1 Risk Potential Ranking of Initial Case Studies

This section summarizes the methods and results of the risk potential ranking conducted by EPA to determine factors that strongly influence the risks of on-site CKD management and to prioritize cement plants for risk modeling. The Risk Assessment Technical Background Document provides more detail on this evaluation.

Approach and Methods

EPA focused this ranking on a subset of the constituent concentration data and 20 sample facilities analyzed in the initial risk screening. Only some of the constituents and facilities were examined to develop an initial sample of case-study facilities that could be evaluated on a "level playing field." In particular:

- Dioxin concentrations were not considered because only 11 of the 20 sample facilities were analyzed for dioxins. Considering dioxins, therefore, would have resulted in artificially high risk potential rankings for some facilities that are based more on data availability than on true differences that exist across sites.

- The five cement plants sampled by EPA in 1993 were not considered. These facilities were excluded from the risk potential ranking because their CKD was not tested for metals, which could result in a bias in the ranking.

It is important to clarify that EPA excluded dioxins and the five facilities sampled in 1993 <u>only from this risk potential ranking</u> and not from the rest of the risk assessment. As discussed in Section 6.2.2, the Agency modeled the risks of dioxins under several actual and hypothetical management scenarios, as well as potential higher-risk conditions found at some of the five facilities sampled in 1993, but not observed in the sample of 15 facilities sampled in 1992.

EPA believes that it is reasonable to focus on the 15 cement plants sampled in 1992 as initial case-study facilities because they appear to provide a representative sample of other cement plants. Specifically, the sample is large and diverse, representing approximately 10 percent of the universe of existing U.S. cement plants as well as a diversity of fuel types, process types, and geographic locations (e.g., eight of the facilities burn hazardous waste as fuel and seven do not). Moreover, the sample of 15 cement plants compares favorably with the complete set of 83 plants for which data are available, as shown in Exhibit 6-4. Specifically, the two sets of facilities are quite similar in terms of a number of factors that influence risk, including CKD management unit types, the size of CKD management units, the proximity to "sensitive" environmental features (karst terrain, geological faults, 100-year floodplains, and endangered species habitats), the number of residents presently within one mile, and the distance to the nearest existing residence. The 15 sample facilities, however, generate relatively large volumes of net CKD compared to the broader set of 83 plants, and do not represent the management of CKD underwater (which is practiced at three of the 83 facilities). Finally, a statistical analysis indicates that the concentrations of metals in CKD at these 15 facilities are similar to the concentrations observed at other cement plants. As discussed in Section 3.2.2, most of the calculated mean concentrations for metals at the 15 sample facilities are not significantly different than the means from other data sources that cover a larger sample of facilities (including PCA Report 2, which provides data on the concentration of metals in CKD from 79 cement plants).

Exhibit 6-4

Comparison of 15 Sample Facilities to Other Facilities

Parameter	Range of Values for 15 Sample Facilities	Range of Values for All 83 Facilities for Which Data are Available[a]
Total net CKD generated	25% ≥ 63,500 MT (70,000 tons) 50% ≥ 40,500 MT (45,000 tons) 75% ≥ 16,500 MT (18,200 tons)	25% ≥ 53,500 MT (59,000 tons) 50% ≥ 21,800 MT (24,000 tons) 75% ≥ 1,100 MT (1,200 tons)
CKD management unit type	60% landfill CKD in an on-site quarry 27% manage CKD in an above-grade pile 13% (2 facilities) have no active CKD unit	43% landfill CKD in an on-site quarry 40% manage CKD in an above-grade pile 11% landfill CKD in other units (mines, slopes) 1% (1 facility) manage CKD in a pond 4% use other management units
CKD managed underwater?	100% no	97% no 3% (3 facilities) yes
Basal area of CKD management unit(s)	25% ≥ 63,500 m^2 (683,000 ft^2) 75% ≥ 6,700 m^2 (72,000 ft^2)	25% ≥ 58,600 m^2 (630,000 ft^2) 75% ≥ 3,700 m^2 (39,800 ft^2)
Facility in karst area?	80% no 20% yes	85% no 15% yes
Facility in fault area?	67% no 33% yes	86% no 14% yes
Facility in 100-year floodplain?	47% no 53% yes	60% no 40% yes
Facility in endangered species habitat?	100% no	98% no 2% yes
Number of residents presently within one mile of property boundary	25% ≥ 1,020 people 75% ≥ 25 people	25% ≥ 2,020 people 75% ≥ 33 people
Distance from property boundary to nearest existing off-site residence	25% ≥ 850 m (2,800 ft) 75% ≥ 15 m (50 ft)	25% ≥ 790 m (2,600 ft) 75% ≥ 30 m (100 ft)

[a] A total of 79 cement plants, including 11 of 15 sample facilities, returned completed PCA mail survey questionnaires. Comparable data for the other four sample facilities were developed during the sampling visits.

For the sample of 15 cement plants, the Agency analyzed site-specific information on a number of factors that determine the degree to which CKD constituents are likely to be released into the environment and transported to locations where humans or ecological receptors could be exposed. The particular factors considered are listed in Exhibit 6-5. As shown, EPA conducted separate analyses of factors that relate to the potential for CKD management to pose risks via the ground-water, surface water, and air pathways (including risks from the ingestion of food contaminated through these different pathways). For each pathway, four sets of factors were systematically considered at every site:

- Factors related to the intrinsic hazard of CKD. These factors included the frequency and magnitude with which chemical concentrations and pH levels exceeded the risk-screening criteria discussed in Section 6.1. Again, dioxins were not considered in this step to avoid biasing the ranking toward the subset of facilities whose CKD was analyzed for dioxins. In addition, EPA did not consider immobile constituents in the ground-water pathway ranking, or radionuclides for any pathway because they were all measured in CKD at levels that fall within the range of typical background levels.[8]

- Factors related to ground-water, surface water, and air contamination potential. These factors included CKD management practices (size of pile, presence of liners and run-off controls, dust suppression practices, etc.) and environmental features (e.g., depth to ground water, distance to surface water, and wind speeds) that have a bearing on the potential for contaminants to migrate from waste management units and contaminate environmental media.

- Factors related to transport potential. These factors included the presence of natural and man-made barriers to contaminant migration in environmental media, such as slurry walls or surface water bodies that might impede the migration of ground-water contaminants, and karst terrain or fractures that may facilitate contaminant migration in ground water. The distance to closest potential receptors also was considered as a transport potential factor, giving the risk potential ranking an element of a maximum exposed individual (MEI) risk assessment.

- Factors related to exposure potential. These factors included the present human uses of nearby ground water, surface water, and air, as well as the size of potentially exposed populations. By considering the size of potentially exposed populations, the ranking also included elements of a population risk assessment. Depending on the size of the population, this factor had the effect of moderating or intensifying the risk potential ranking based on MEI distances alone.

---

[8] EPA believes that leaving immobile ground-water contaminants and radionuclides out of this ranking provides a more realistic evaluation of risk potential. However, once a facility was selected for risk modeling based on this ranking, all constituents that exceeded one of the risk-screening criteria were modeled.

Exhibit 6-5

Site Specific Factors Used to Evaluate Risk Potential of On-Site CKD Management

The Agency assembled site-specific values for each of these factors using, when available, information collected during the site visits. When data were not available from the site visits, a variety of sources were used to fill in data gaps, including the PCA mail survey, local offices of State governments and the U.S. Geological Survey (USGS), USGS topographic maps, the Graphical Exposure Modeling System (GEMS), and environmental data collected by EPA for nearby facilities as part of other risk assessment projects.

For each pathway (ground water, surface water, and air), the various factors were combined to develop rankings (negligible, low, moderate, and high) regarding intrinsic hazard, contamination potential, transport potential, and exposure potential at each site. The Agency then combined these four rankings to develop an overall ranking of the ground-water, surface water, and air risk potential at each plant. In developing this overall ranking for the different media, the lowest ranking was selected from among the scores assigned to intrinsic hazard, contamination potential, transport potential, and exposure potential. For example, if the ground-water pathway at a facility was assigned a low intrinsic hazard, a high contamination potential, a moderate transport potential, and a moderate exposure potential, the facility was assigned an overall low ground-water risk potential. In this way, the Agency evaluated the individual risk factors to determine if there were any factors that would limit the potential for significant risk at a given site. If a risk-limiting factor was identified (e.g., intrinsic hazard was low, as in the above example), the overall risk for that pathway could not be high. Chapter 7 of the Risk Assessment Technical Background Document describes this methodology in more detail, presents the individual factors and criteria used to develop risk potential rankings, and documents the results for each of the 15 case-study facilities.

In performing this ranking, EPA considered only the current conditions that exist at each cement plant, such as the current CKD pile sizes and containment features, the current land and water use practices in surrounding areas, and the current population distributions in off-site areas. Insufficient data were available to support a meaningful analysis and prediction of possible future conditions. However, significant changes in the current conditions at these 15 plants could result in some facilities being assigned higher or lower risk potential rankings.

Results of Risk Potential Ranking

The case-study site rankings represent best professional judgments on the potential for current CKD management practices at the 15 sample plants to pose risks to human health and the environment, based on the analysis of factors outlined above. The results provide a means of evaluating the risk potential at each of the 15 sites relative to each other, not a definitive assessment of the absolute risk at each site (e.g., a site ranking cannot be translated into a numeric cancer or non-cancer risk estimate). Considering the rigor of the methodology, this ranking provides a credible basis for prioritizing the sites and selecting plants that warrant risk modeling. At the same time, the results indicate the general level of risk expected to exist at each site, based on the Agency's understanding of risk-influencing parameters and the results of previous risk analyses and modeling projects. This is especially the case for sites that are assigned a negligible risk potential, where one or more site factors allow the Agency to conclude, with some certainty, that risks for a given release and exposure pathway are indeed sufficiently low to be ignored. As previously discussed, available information indicates that the site conditions and distribution of risk potential rankings across the sample of 15 plants reasonably represents the larger universe of active cement plants, but may not reflect particularly high-risk conditions or factors that have been discovered at the damage case sites or observed during site visits.

Risk Potential Ranking for the Ground-water Pathway

Exhibit 6-6 summarizes the risk potential rankings for the ground-water pathway at the 15 sample cement plants. These rankings address only the potential for human health risks through drinking water ingestion, not the potential for health or ecological risks associated with the discharge of contaminated ground water to a surface water body (which are considered in the next section on surface water risk potential). As shown, the Agency developed separate hazard potential rankings for each plant based on the intrinsic hazard of chemical concentrations and pH levels in CKD leachate. The plants are ordered in the exhibit from highest to lowest ground-water risk potential based on the concentrations of chemicals in CKD leachate. The risk potential ranking of the plants considering pH levels is slightly different, as indicated by the number in parentheses in the far right column.

Based on the results in Exhibit 6-6, none of the 15 facilities are expected to pose an overall high ground-water risk. Although the Agency's methodology ranked certain factors in isolation as having a high risk potential, the scores for these individual factors were moderated when combined with the other factors that determined overall site risk. For example, even though the potential for ground-water contamination was ranked high at Facility G, the overall risk potential for the facility was ranked moderate considering the other factors (intrinsic hazard, transport potential, and exposure potential) that influence risks at the site.

The Agency ranked four facilities as having an overall moderate risk potential for the ground-water pathway, considering the chemical concentrations in CKD leachate. In order of descending risk potential, these are Facilities G, A, C, and J. These same facilities also were ranked among the top considering pH levels of the CKD leachate. Facilities A and C burn hazardous waste as fuel, while Facilities G and J do not use hazardous waste as an alternative fuel. The primary factors that contributed to these facilities being ranked relatively high included:

- At Facility G, the potential for ground-water contamination appears high because, among other factors, the water table is shallow (0.3 to 1 meter [1 to 3 feet] beneath the CKD pile), the underlying soils are a permeable sand, and net recharge is high (38 cm/year, or 15 in/year). However, the potential for ground-water contamination to migrate to off-site drinking water wells and result in significant exposures is only moderate because the nearest downgradient residence is approximately 1,600 meters (one mile) from the CKD pile. Furthermore, local water suppliers have stated that residences in the area derive their drinking water from community water systems (although ground water is used for domestic purposes in the area and the possibility of a private well at nearby residences cannot be ruled out). The size of the population that may be exposed to any ground-water contamination within a mile downgradient of the facility's CKD pile is about 20 people.

- At Facility A, the contamination potential is not as high as at Facility G because the material underlying the CKD pile is a less permeable limestone and siltstone and because the net recharge is smaller (15 cm/year). As at Facility G, ground water is used for domestic purposes in the area, but according to local water suppliers, residences around Facility A derive their drinking water from a nearby river. If any nearby residences do have private wells, the nearest downgradient

residence that may be exposed to ground-water contamination is about 490 meters

Exhibit 6-6

Risk Potential Rankings for the Ground-water Pathway

Facility	Intrinsic Hazard Potential		Ground-water Contamination Potential	Transport Potential	Current Exposure Potential*	Overall Ground-water Risk Potential (Rank)	
	Chemical	pH				Chemical	pH
Facility G	Moderate	High	High	Moderate	Moderate	Moderate (1)	Moderate (2)
Facility A*	Moderate	Moderate	Moderate	Moderate	High	Moderate (2)	Moderate (3)
Facility C*	Moderate	Moderate	High	Moderate	Moderate	Moderate (3)	Moderate (5)
Facility J	Moderate	High	Moderate	Moderate	Moderate	Moderate (4)	Moderate (4)
Facility D	High	High	Low	High	High	Low (5)	Low (9)
Facility I*	Low	High	Moderate	Moderate	High	Low (6)	Moderate (1)
Facility F*	Low	Moderate	Moderate	Moderate	High	Low (7)	Moderate (6)
Facility B	Low	Moderate	Moderate	High	Moderate	Low (8)	Moderate (8)
Facility S*	Low	High	Moderate	Moderate	Moderate	Low (9)	Moderate (7)
Facility O*	Moderate	High	Moderate	Low	Negligible	Negligible (10)	Negligible (10)
Facility H*	Moderate	Moderate	Moderate	Low	Negligible	Negligible (11)	Negligible (11)
Facility N*	Moderate	Moderate	Moderate	Low	Negligible	Negligible (12)	Negligible (13)
Facility E	Low	Moderate	Moderate	Low	Negligible	Negligible (13)	Negligible (12)
Facility Q	Moderate	Moderate	Negligible	Negligible	Negligible	Negligible (14)	Negligible (15)
Facility L	Moderate	High	Negligible	Negligible	Negligible	Negligible (15)	Negligible (14)

* Burns hazardous waste as fuel.

* Future development of ground-water uses around these facilities could increase the exposure potential rankings and, depending on the risk rankings for the other site factors (intrinsic hazard, ground-water contamination potential, and transport potential), could result in higher overall ground-water risk potential rankings.

(1,600 feet) from the CKD pile and the total population within a mile downgradient is 450 people, larger than the potentially exposed population at Facility G.

- At Facility C, there appears to be a high potential to contaminate ground water because the water exists just three meters below the CKD pile, the unsaturated zone is moderately permeable (a clayey sand), and net recharge is high (33 cm/year). Although ground water is used as a drinking water source in the area,

the nearest downgradient residence that may be affected is farther away from the CKD pile than at Facilities G and A (1,100 meters). Additionally, the only residence that might be affected by any ground-water contamination is located on site, in between the CKD pile and a large river, which borders the site. All other residences in the direction of ground-water flow are on the other side of the river and are unlikely to be exposed to any ground-water contamination originating from Facility C.

- At Facility J, the ground-water contamination potential appears moderate because the water table is moderately deep (9 meters), the net recharge is moderate (20 cm/year), and the permeability of the shale underlying the site's CKD pile is low. Ground water is presently used in the area for domestic purposes, and the nearest downgradient residence that may have a private well is roughly 550 meters from the CKD pile. There are approximately 40 people within a mile downgradient that may be exposed to any ground-water contamination originating from the pile.

Five facilities were ranked as having an overall low ground-water risk potential. All of these facilities were ranked as low because one or more critical factors that determine overall site risk potential were scored low according to the Agency's ranking methodology. For example, the intrinsic hazard of the chemical concentrations in CKD leachate at Facilities I, F, B, and S is low, making the overall ground-water risk potential low at those sites regardless of the ground-water contamination, transport, and exposure potential. Similarly, even though the intrinsic hazard of the dust at Facility D is ranked high, the overall ground-water risk potential at the site appears low because of the low potential for ground-water contamination at the site (the water table is about 30 meters deep, net recharge is very low, and the underlying clay and shale is very impermeable).

Six facilities were ranked as having an overall negligible ground-water risk potential. Two of these facilities, Q and L, were assigned a negligible hazard because they presently recycle all of their CKD and do not have an on-site CKD management unit. The other facilities were assigned a negligible hazard because there is a negligible potential for exposure to any ground-water contamination that might originate from on-site CKD management. In particular:

- All ground water at Facility O discharges directly into the site's quarry (ground water is pumped at the site to dewater the quarry). Even after mining operations cease and ground-water contours are allowed to return to normal, any ground-water contamination originating from the plant's CKD pile would migrate just 150 meters to the northern property boundary where it would discharge directly into a surface water body without being withdrawn for human use.

- If ground water beneath the CKD pile at Facility H were to become contaminated, it would likely discharge directly into a river with a large dilution potential located 1,200 meters downgradient. All of the property between the pile and the river is owned by Facility H and presently uninhabited.

- There presently are no residences within a 1,600 meters downgradient from the CKD pile at Facility N. Also, the nearest downgradient property boundary where off-site exposures could occur is relatively far (1,400 meters) from the CKD pile.

- Any ground-water contamination originating from the CKD pile at Facility E is expected to discharge directly to a river with a large dilution potential 370 meters downgradient without being withdrawn for human use (all of the property between the pile and the river is owned by Facility E and presently uninhabited). Even if all the contamination did not discharge into the river, the closest downgradient residence that could be exposed to the contamination is approximately 2,300 meters away.

Risk Potential Ranking for the Surface Water Pathway

Exhibit 6-7 summarizes the risk potential rankings of the 15 case-study cement plants for the surface water pathway. These rankings address the potential for human health risk via drinking water, fish ingestion, and other surface water uses, as well as the potential for risk to aquatic organisms. As for the ground-water pathway, the Agency developed two separate rankings, one considering only the concentrations of chemicals (not pH levels) in CKD leachate and the other considering both the concentrations of chemicals and pH levels. Contamination potential scores were developed by considering three contaminant migration pathways: stormwater run-off to surface water, ground water to surface water migration, and air deposition to surface water. The highest score from among these three scores at a given facility was selected as that facility's surface water contamination potential. The overall surface water risk ranking at a site was determined by selecting the lowest score for any of the critical factors at that site (i.e., intrinsic hazard, contamination potential, transport potential, and current exposure potential). The plants are ordered in Exhibit 6-7 from highest to lowest overall risk potential considering the concentrations of chemicals in CKD leachate. The alternate ranking considering pH levels is indicated in the far right column of the exhibit.

Based on these results, none of the 15 facilities are expected to present a high risk to human health and aquatic organisms via the surface water pathway. As discussed for the ground-water pathway, the Agency's methodology ranked some facilities high for one or more aspects, but at each facility, at least one critical factor lowered the overall risk potential. For example, Facility F scored high for transport potential, but received an overall moderate risk ranking when the other factors were considered.

As shown in Exhibit 6-7, EPA ranked seven facilities as having a moderate surface water risk potential. Five of these seven facilities (O, F, A, I, and N) burn hazardous waste as fuel. The main factors that contributed to these rankings include:

- At Facility O, CKD could blow into the air and deposit in a water body with a large surface area just 150 meters to the north. Additionally, after current ground-water pumping to dewater the quarry ceases, any ground-water contamination originating from the on-site CKD pile would be expected to migrate 150 meters to the north and discharge into the same water body. Such contamination, including possible increases in pH levels in affected areas, has the potential to cause ecological damage, but would not be expected to pose a human drinking water threat because the water is not used for drinking. The potential for surface water contamination via stormwater run-off appears low, given surface drainage patterns and ditches that divert run-off from the CKD pile into the quarry, through a series of settling ponds, and eventually out to the surface water body through an NPDES-permitted outfall.

- At Facility J, there is a potential for stormwater run-off carrying contaminants from the on-site CKD pile to migrate approximately 2,100 meters through a drainage ditch and discharge into a reservoir. Given the pile's containment features and the site's hydrogeology and meteorology, there also is a potential for CKD contaminants to migrate via ground-water discharge and airborne deposition

Exhibit 6-7

Risk Potential Rankings for the Surface Water Pathway

Facility	Intrinsic Hazard Potential		Surface Water Contamination Potential by Different Migration Pathways			Transport Potential	Current Exposure Potential[a]	Overall Surface Water Risk Potential (Rank)	
	Chemical	pH	Storm Water	Ground Water	Air			Chemical	pH
Facility O[b]	Mod.	Mod.	Low	Mod.	Mod.	High	High	Mod. (1)	Mod. (1)
Facility J	Mod.	Mod.	Low	Low	Mod.	High	High	Mod. (2)	Mod. (2)
Facility F[b]	Mod.	Mod.	Low	Mod.	Low	High	Mod.	Mod. (3)	Mod. (5)
Facility D	Mod.	Mod.	Mod.	Low	Low	High	Mod.	Mod. (4)	Mod. (4)
Facility A[b]	Mod.	Mod.	Mod.	Neg.	Low	High	Mod.	Mod. (5)	Mod. (3)
Facility I[b]	Mod.	Mod.	Mod.	Mod.	Mod.	Mod.	Mod.	Mod. (6)	Mod. (6)
Facility N[b]	Mod.	Mod.	Low	Neg.	Mod.	Mod.	Mod.	Mod. (7)	Mod. (7)
Facility G	Mod.	Mod.	Neg.	Low	Low	High	Mod.	Low (8)	Low (8)
Facility S[b]	Mod.	Mod.	Low	Neg.	Neg.	High	Mod.	Low (10)	Low (10)
Facility B	Mod.	Mod.	Low	Low	Low	High	Mod.	Low (9)	Low (9)
Facility E	Mod.	Mod.	Low	Mod.	Mod.	Low	Mod.	Low (11)	Low (11)
Facility C[b]	Mod.	Mod.	Low	Low	Mod.	Low	High	Low (12)	Low (12)
Facility H[b]	Mod.	Mod.	Low	Low	Mod.	Neg.	Mod.	Neg. (13)	Neg. (13)
Facility Q	Mod.	Mod.	Neg.	Neg.	Neg.	Neg.	Neg.	Neg. (14)	Neg. (15)
Facility L	Mod.	Mod.	Neg.	Neg.	Neg.	Neg.	Neg.	Neg. (15)	Neg. (14)

[b] Burns hazardous waste as fuel.

[a] Future development of surface water uses around these facilities could increase the exposure potential rankings and, depending on the risk rankings for the other site factors (intrinsic hazard, surface water contamination potential, and transport potential), could result in higher overall surface water risk potential rankings.

to this same reservoir, located 1,000 meters directly downgradient and downwind from the on-site pile. This reservoir has minimal flow, so any contamination reaching the water is unlikely to be transported downstream and diluted significantly. In addition, there is a high potential for human exposures through the fish ingestion pathway because the reservoir is actively fished.

- At Facility F, there is a potential for contaminants to migrate through ground water from the on-site CKD pile to a creek located 600 meters downgradient. There also is a potential for windblown dust from the pile to deposit in the same creek, given the limited controls on dusting and the on-site meteorological conditions. This creek has a low flow and dilution capacity, and currently is used in the vicinity of the cement plant for agricultural purposes, creating the potential for human exposures through the food chain. Lead and pH levels measured in

extract analyses of this facility's CKD also exceed AWQCs, indicating a potential for aquatic ecological damage if the creek is contaminated.

- At Facility D, a moderate potential for surface water contamination through stormwater run-off exists because run-off is only partly controlled and the nearest surface water body that may receive run-off is 300 meters away. In addition, there is a potential for this same creek to be contaminated by airborne deposition of CKD, because windblown dusting from the pile is not prohibited entirely (e.g., although the pile is occasionally wetted, it is not covered or compacted over its entire surface). The potentially receiving water body has a very low flow (annual average of 0.06 m^3/sec, or 2 cfs), and thus has a very limited dilution capacity. The low flow makes it unlikely that the water body is used as a human drinking water supply. However, thallium and dioxin concentrations measured in leachate extracts of the facility's CKD indicate a potential for human health risks through the fish ingestion pathway. The high pH levels of CKD leachate at the facility also create the potential for aquatic ecological damage.

- At Facility A, there is a contamination potential via the stormwater run-off and air migration pathways because of the close proximity of the nearest water body (15 meters), a moderate potential for windblown dusting from the site's CKD pile, and limited stormwater run-off controls. The potentially receiving surface water has a low dilution capacity (annual average flow of 2 m^3/sec), and people could come in direct contact with the receiving water at the point of contamination (i.e., the water body is off site and access to it is unrestricted). Given the water's low flow, any surface water contamination is probably not a human drinking water threat, although it could pose a health threat via the fish ingestion pathway (thallium appears to the primary constituent of potential concern for this pathway). Also, elevated lead and pH levels measured in leachate extracts of the plant's CKD indicate a potential for adverse aquatic ecological effects.

- At Facility I, the nearest water body to the CKD pile is a river located only 90 meters away. There is a potential for contaminants to migrate into the river through ground-water discharges because there is a moderate potential for ground-water contamination at the site (given limited engineering controls and the site's hydrogeology), the river is located in a downgradient direction, and the river is likely to receive ground-water inputs. A potential also exists for contaminants to migrate to the river via stormwater run-off and windblown dusting, given site meteorology and limited controls on the pile (e.g., stormwater is not diverted in drainage ditches or subject to NPDES permitting prior to discharge). However, the water's relatively large flow (annual average of 132 m^3/sec) is expected to significantly dilute any contamination that enters the river.

- At Facility N, CKD containment features and site environmental conditions combine to create a moderate potential for contaminants to blow into the air and deposit in a river about 1,400 meters from the on-site CKD pile. There also is a low potential for contaminants to migrate to this same creek along with stormwater run-off, given the pile's run-off controls and distance from surface water. The potentially receiving river has a moderate flow (annual average of almost 100 m^3/sec), can be accessed by people in the area where CKD contaminants would enter the water, and is presently used for recreation, fishing,

and irrigation. Elevated lead and pH levels measured in leachate extract analyses of the facility's CKD also suggest the potential for aquatic ecological damage.

The Agency ranked five facilities as having an overall low risk potential for the surface water pathway. All of these facilities were assigned a relatively low surface water risk because one or more critical factors (e.g., low contaminant concentrations, low transport potential) were found to pose a low risk according to the Agency's ranking methodology.

Three facilities were ranked as having an overall negligible potential for surface water risk. As discussed for the ground-water rankings, two of these facilities, Facilities Q and L, were assigned a negligible risk potential because they presently recycle 100 percent of their CKD. The other facility, Facility H, was assigned a negligible surface water risk potential because the nearest surface water is located 1,200 meters from the on-site CKD pile. This relatively long distance makes it unlikely that the river will receive large CKD loads via any migration pathway (ground water, stormwater run-off, or air). Even if CKD migrated to the river, it would be quickly diluted because of the river's high flow in the vicinity of Facility H (over 5,000 m^3/sec on average).

When fully implemented, the Agency's recently promulgated stormwater runoff control regulations (described in Section 7.2.1 of Chapter 7) could substantially mitigate or eliminate human health risks and aquatic ecological damages to surface waters attributable to stormwater runoff of CKD contaminants. These regulations would not, however, control delivery of CKD contaminants to surface waters via ground-water or air pathways.

Risk Potential Ranking for the Air Pathway

The air pathway is of concern for CKD because the dust is a fine particulate matter that is readily suspendable, transportable, and respirable in air. In general, particles that are $\leq$100 micrometers (μm) may be suspended in the wind and transported. Within this range, particles that are $\leq$30 μm can be transported for considerable distances downwind. However, only particles $\leq$10 μm are respirable by humans. The significance of particulate size for CKD is illustrated in Exhibit 6-8, which displays the particle size distribution for dust samples by kiln type. Virtually all of the dust generated at the 15 case-study sites may be suspended and transported in the wind (i.e., the vast majority of particles are $\leq$100 μm), and over two-thirds of all dust particles generated may be transported over long distances. Additionally, a significant percentage of the total dust generated (from 22 to 95 percent, depending on kiln type) is comprised of respirable particles that are $\leq$10 μm.

In an effort to keep the dust down, many facilities add water to CKD prior to disposal to form larger clumps or nodules. In addition, as CKD sits in a pile exposed to the elements, occasional wetting by rainfall results in the formation of a thin surface crust in inactive areas of the pile. However, based on field observations during the site sampling trips, neither the formation of nodules nor the natural surface crusting eliminates the potential for CKD to blow into the air. Nodulizing the dust prior to disposal provides incomplete and temporary control because the entire dust volume is not nodulized and because the dust eventually dries and returns to a fine particulate that is available for suspension and transport. Likewise, a surface crust may develop, but (1) the crust breaks when vehicles or people move on the pile, and (2) fresh dust is regularly added to the pile providing a continual, exposed reservoir of fine particles.

Exhibit 6-8

Particle Size Distribution of CKD by Kiln Type[a]

Kiln Type	Number of Kilns in Case Study[b]	Percentage of Particles ≤100 μm	Percentage of Particles ≤30 μm	Percentage of Particles ≤10 μm
Long, wet rotary	20	95	77	53
Long, dry rotary	2	100	99	95
Dry, with precalciner	6	98	66	22

[a] Data for particle size distribution from: Todres, H.A. et al. 1992. *CKD Management Permeability*, Research and Development Bulletin RD103T, Portland Cement Association, Skokie, IL.

[b] The number of kilns represents the total number of kilns at the 15 facilities sampled in 1992, such that if one facility had three kilns each of the kilns was counted.

Although these intrinsic properties of CKD make the dust conducive to airborne suspension and transport, other site-specific factors must be considered when evaluating the overall risk potential for the air pathway. For this risk potential ranking, EPA has focused primarily on the potential for CKD releases as the dust is transported across a site and disposed in piles. The Agency recognizes that an unknown quantity of CKD also may be released from fugitive emissions during loading and unloading of vehicles transporting CKD, during CKD removal from the dust collection systems (e.g., electrostatic precipitators), and from other points in the process (e.g., process leaks or stack emissions). However, insufficient information was available to evaluate these potential release sources in a meaningful way in this risk ranking.

Exhibit 6-9 summarizes the air risk potential rankings for the 15 case-study cement plants. The Agency developed overall risk potential rankings based on the intrinsic hazard of the dust (based on total concentrations measured in dust), the air contamination potential, transport potential, and current exposure potential. The plants are listed in the exhibit from highest to lowest risk potential.

None of the facilities were ranked as posing a high risk potential for the air pathway considering the many site-specific factors that influence risk. Several facilities were ranked high for at least one critical factor, but this was moderated when combined with other factors. For example, the exposure potential was ranked high at Facility B, but other factors such as the intrinsic hazard of the facility's dust, the moderate exposed surface area of the pile (51,200 m^2 or 550,000 ft^2), the high precipitation-evaporation index (indicating a relatively moist environment), and the distance to the nearest residence (460 meters) suggest that overall risk potential is moderate rather than high.

The Agency ranked 11 facilities, including seven hazardous waste burners and four facilities that do not burn hazardous waste, as posing a moderate risk potential for the air pathway. The similarity in scores across the range of facilities is related to the similarities in intrinsic hazard scores (all 15 plants scored moderate for intrinsic hazard) and similarity in

Exhibit 6-9

Risk Potential Rankings for the Air Pathway

Facility	Intrinsic Hazard Potential	Air Contamination Potential	Transport Potential	Current Exposure Potential[a]	Overall Air Risk Potential (Rank)[b]
Facility A*	Moderate	Moderate	High	High	Moderate (1)
Facility J	Moderate	Moderate	High	Moderate	Moderate (2)
Facility D	Moderate	Moderate	High	High	Moderate (3)
Facility B	Moderate	Moderate	Moderate	High	Moderate (4)
Facility G	Moderate	Moderate	Moderate	High	Moderate (5)
Facility F*	Moderate	Moderate	Moderate	Moderate	Moderate (6)
Facility O*	Moderate	Moderate	Moderate	Moderate	Moderate (7)
Facility I*	Moderate	Moderate	Moderate	Moderate	Moderate (8)
Facility N*	Moderate	Moderate	Moderate	Moderate	Moderate (9)
Facility H*	Moderate	Moderate	Moderate	Moderate	Moderate (10)
Facility S*	Moderate	Moderate	Moderate	Moderate	Moderate (11)
Facility C*	Moderate	Moderate	Low	High	Low (12)
Facility E	Moderate	Moderate	Low	Moderate	Low (13)
Facility L	Moderate	Negligible	Negligible	Negligible	Negligible (14)
Facility Q	Moderate	Negligible	Negligible	Negligible	Negligible (15)

* Burns hazardous waste as fuel.

[a] Future development of land uses around these facilities could increase the exposure potential rankings and, depending on the risk rankings for the other site factors (intrinsic hazard, air contamination potential, and transport potential), could result in higher overall air risk rankings.

[b] The distinction between pH and chemicals is not applicable for the air pathway. The intrinsic hazard ranking for the air pathway is based only on results of totals analyses, which do not include pH (pH is only relevant for liquids).

management practices (13 of the 15 facilities scored moderate for contamination potential). However, to prioritize plants for risk modeling, EPA identified the individual plants posing the greatest potential risk for the air pathway. The three plants ranked as having the greatest risk potential were Facilities A, J, and D. Primary factors that contributed to their ranking included:

- At Facility A, a large exposed surface area of the dust pile (206,000 m^2), limited dust suppression measures (e.g., the pile is not wetted and is only partially compacted), moderate wind speeds, and a relatively moist setting (relatively frequent rainfall and limited evaporation) contributed to an overall moderate ranking for air contamination potential. The close proximity of the CKD pile to the site boundary (30 meters) and moderate distance to the nearest residence (490 meters) suggest a high potential for CKD to be transported to receptors if it is

released in the air. Finally, Facility A has a relatively large population within one mile (3,000 people) and much of the land surrounding the plant is used for agriculture (the facility leases some of its own property to nearby farmers), suggesting that both inhalation and food chain exposures could occur if CKD is released to air.

- At Facility J, limited dust suppression practices (e.g., the on-site CKD pile is uncovered, not wetted, and only partially compacted) and moderate rainfall and wind speeds result in a moderate potential for wind erosion from the on-site CKD pile. The proximity to property boundaries (140 meters) and a residence (300 meters) also suggests that CKD could be transported to receptors if released to air. Surrounding agricultural land and pastures provide a pathway for food chain exposure in addition to direct inhalation and incidental ingestion exposures.

- At Facility D, an active dust suppression program (e.g., wetting the pile) moderates the potential releases from a pile with a large exposed surface area (102,000 m^2) in a dry climate. However, the close proximity of the CKD pile to property boundaries (150 meters) and the large nearby population (1,400 people within one mile) suggest that transport of dust and exposures to nearby populations may occur.

Only Facilities C and E were ranked as having a low risk potential for the air pathway. Both of these facilities were ranked low because the potential for transport to exposed individuals for each facility was low. Specifically, the nearest residence at Facility C is 1,100 meters from the pile, and the nearest residence at Facility E is over 1,600 meters from the pile. Therefore, it is unlikely that significant inhalation exposures would occur. However, the air pathway risks do not appear to be negligible because land around each facility is used, in part, for agricultural purposes, creating the potential for human exposures through the ingestion of food contaminated by atmospheric deposition.

Only two facilities were ranked as having a negligible risk potential for the air pathway. These facilities, Facilities L and Q, were assigned negligible risk because all generated CKD is currently recycled.

6.2.2 Risk Modeling of On-site CKD Management

This section presents the methodology and results of the Agency's quantitative fate and transport modeling analysis of on-site CKD management. The first part presents the analytical methodology and the second part presents the results of the on-site risk modeling.

Analytical Methodology

The Agency conducted a quantitative fate and transport modeling analysis to estimate the potential human health and environmental effects associated with current on-site CKD management practices. This modeling analysis extended the results of the risk potential ranking analysis (presented in Section 6.2.1) by quantifying risks at five of the 15 facilities evaluated in that ranking analysis. For each of the three primary direct exposure pathways scored (i.e., air, surface water, and ground water), the two highest ranking facilities in each exposure pathway were selected for the modeling analysis to provide a basis for quantifying the upper end of the risk distribution for the 15 case-study plants. Because some facilities were the first or second

highest scoring facility in more than one pathway, this approach resulted in the selection of a total of five facilities for modeling.

As discussed in Section 6.2.1, the risk ranking evaluated a sample of 15 CKD facilities shown to be reasonably representative of the universe of 115 CKD facilities in the U.S. By evaluating risks at two facilities believed to represent the highest risk potential in each of the three direct pathways, EPA selected plants that would be most likely to include those combinations of CKD constituent characteristics, management practices, and exposure settings that might pose the greatest risk to human health from the larger 15-facility sample.

While the methodology focused on evaluating the potential high end of the risk distribution, it also provided an estimate of the central tendency portion of the national risk distribution, because three of the five modeled facilities represented midrange scores in each of the pathways. For example, while Facility G was selected as the highest ranking facility in the ground-water pathway, it represented the eighth ranking facility out of 15 for the surface water pathway. Thus, the modeled surface water risk estimates corresponding to this facility and two others could be used to represent the central portion of the national risk distribution. In this manner, the Agency was able to characterize the central tendency portion of the national risk distribution.

In focusing on the 15 case-study cement plants, it is possible that certain less frequent but potentially high risk CKD management scenarios might not be represented, potentially understating the true high end nationwide risks from CKD disposal. Consequently, the case-study baseline analysis was supplemented with a number of potentially higher risk scenarios to more fully characterize the upper tail of the distribution of national risks. Exhibit 6-10 illustrates these six sensitivity analysis scenarios and their relationship to the baseline central tendency and high end scenarios evaluated in the initial case study analysis.

The baseline on-site CKD management scenarios simulated, as closely as feasible, the actual waste management practices and environmental conditions at the five modeled facilities in order to estimate order-of-magnitude risks at relevant exposure points. Risks were estimated using a standard Agency screening-level model (MMSOILS), a mix of site-specific and regional geographical data, and standard Agency exposure assessment and risk characterization methods. Both individual cancer risks and noncancer human health effects were estimated via air, ground-water, surface water, soils, and the foodchain pathways. Aquatic ecological effects also were estimated for potentially affected surface waters.

The sensitivity analyses of higher risk modeling scenarios were conducted to quantify effects from potentially higher risk waste characteristics, environmental settings, or CKD management practices that have been observed nationally but that were not found at the five baseline facilities. Thus, they are hypothetical yet plausible. Each of these scenarios was based primarily on the baseline case-study facility characteristics; only key risk factors were modified to simulate a potentially higher risk condition. For example, hypothetical upper bound dioxin risks were estimated by simulating dioxin/furan concentrations at the highest levels measured by EPA at each of the five modeled facilities. Thus, this sensitivity analysis scenario combined the basic transport and exposure characteristics of the five original baseline facilities with one selected high risk potential factor (increased dioxin concentrations) to provide an upper sensitivity estimate of the potential contribution of dioxins/furans to CKD risks.

Exhibit 6-10

Graphical Illustration of On-site Risk Modeling Scenarios

The six higher risk scenarios examined, in turn, the following waste characteristics, environmental settings, management practices, or exposure scenarios:

- Disposal of CKD with the highest levels of 2,3,7,8-substituted chlorinated dibenzo-p-dioxins (CDDs) and dibenzo-furans (CDFs) measured by EPA;[9]

- Disposal of CKD with the 95th percentile highest measured metals concentrations based on combined EPA and industry samples from nearly 100 CKD facilities;

- Simulation of a CKD pile located directly adjacent to an agricultural field with uncontrolled erosion of CKD impacting the crops;

- Simulation of a CKD pile located directly adjacent to a surface water body (a lake and a river) with uncontrolled CKD eroding directly to the water;
- Simulation of CKD management in the bottom of a quarry that is covered with water resulting from ground-water seepage; and

- Simulation of potential risks to highly exposed individuals relying on locally-grown produce, beef, and milk, and locally-caught fish for subsistence purposes.

The primary components of the risk modeling methodology used in the baseline on-site scenarios, the higher risk scenarios, and the off-site use scenarios, are summarized below. A more-detailed presentation of the modeling methodology is presented in Chapter 8 of the Risk Assessment Technical Background Document.

Release, Fate, and Transport Modeling Methodology

The CKD risk modeling analysis used the MMSOILS model, a screening-level multimedia contaminant release, fate, and transport model, to estimate ambient concentrations of constituents of concern in ground water, air, surface water, soils, and the foodchain. MMSOILS was developed by EPA's Office of Research and Development to simulate the release of hazardous constituents from a wide variety of waste management scenarios and their subsequent multimedia transport through key environmental pathways.[10] MMSOILS also simulates numerous cross-media transfers of contaminants (e.g., atmospheric deposition to soil and ground water discharge to streams). As a screening-level model, MMSOILS was designed to provide rough order-of-magnitude exposure estimates in relatively simple environmental settings (e.g., granular porous aquifers and relatively flat terrain). Greater uncertainty is associated with the model's application to more complex and heterogeneous environmental settings. See Chapter 8 of the Technical Background Document for a more detailed description of MMSOILS and its use in this risk analysis.

The Agency adopted a screening-level methodology for this analysis both in the selection of MMSOILS and in the nature of the data used in the simulations. The Agency used site-

---

[9] The Agency is currently conducting a scientific reassessment of the cancer potency of CDDs/CDFs. Because this reassessment has not yet been completed, the CDD/CDF risk estimates are subject to revision.

[10] U.S. Environmental Protection Agency, Office of Research and Development, MMSOILS: Multimedia Contaminant Fate, Transport, and Exposure Model, Documentation and User's Manual, September 1992 (updated in April 1993).

specific, regional, and national level data to characterize the five actual cement kiln facilities. Data for the baseline on-site facilities was obtained primarily from three sources:

- Site-specific data that were collected by the Agency from actual CKD facilities;
- PCA mail survey;[11] and
- Previously collected data on facilities located in similar geographical regions as the case study CKD facilities.[12]

These data represent the best readily available sources for simulating waste characteristics, CKD management practices, environmental settings, and receptor locations at the five baseline on-site facilities. Because many of the environmental setting data characterize the regional setting of a facility rather than its site-specific features, the modeling results represent a rough screening-level indication of contaminant fate and transport in the various environmental media.

The Agency estimated ambient concentrations of CKD constituents of concern in the following exposure pathways/routes:

- Direct inhalation of air;
- Ingestion of contaminated ground water;
- Recreational exposures to contaminated surface water[13]
- Incidental ingestion of contaminated soil; and
- Foodchain ingestion of contaminated vegetables, beef, and milk.

The MMSOILS documentation describes the mathematical approaches used in estimating ambient concentrations in each of these pathways, along with key assumptions and limitations.

There are many sources of analytical uncertainty in any exposure or risk assessment. To better characterize this uncertainty, the Agency's guidance on risk characterization recommends developing both "central tendency" and "high end" risk estimates when conducting risk assessments.[14] The central tendency estimate represents the best estimate of risk, while the high end estimate represents a plausible estimate of the individual risk for those persons at the upper end of the risk distribution. This study adopted the Agency's recommended approach by developing both central tendency and high end risk estimates for CKD facilities.

In addition, EPA guidance recommends accounting for analytical uncertainty wherever possible in risk assessments. In developing this CKD risk assessment methodology, the Agency identified the most significant sources of uncertainty that could result in understating individual risks at the baseline facilities. Because no analytical data were available at the five facilities

---

[11] The 1991 Portland Cement Association mail survey.

[12] These data were collected from EPA Regional offices and states for the Corrective Action Regulatory Impact Analysis currently being conducted by EPA's Office of Solid Waste.

[13] Because none of the five baseline facilities had drinking water supply intakes in any of the rivers downstream of the CKD facilities, exposures from ingestion of surface water as a drinking water source were not estimated in this analysis.

[14] U.S. EPA, 1992. Guidance on Risk Characterization for Risk Managers and Risk Assessors.

quantifying environmental concentrations of CKD constituents at exposure points, it was not possible to calibrate the fate and transport modeling methodology with actual site data. Consequently, it was judged that the modeled exposure concentrations represented the most significant source of analytical uncertainty. Accordingly, the Agency generated "best estimate" and "upper bound" constituent concentrations in each exposure pathway at each facility based on best estimate and upper end characterizations of the key environmental transport parameters contributing most to uncertainties in the ambient concentration estimates.

Characterization of Exposed Populations

Data were collected on the locations of individuals that could be exposed to ambient concentrations of CKD constituents in each of the exposure pathways analyzed with MMSOILS. The methodology focused on estimating plausible exposure that could reasonably be expected based on actual nearby residential exposure locations. The risk modeling did not estimate risks corresponding to exposures directly on the CKD pile, because the Agency did not identify any residences on abandoned CKD piles; this hypothetical exposure scenario was not addressed further in the study. In addition, because the methodology was based on a risk screening approach, it was not possible to characterize the distribution of risks received by exposed populations surrounding each CKD facility. The approach used in characterizing the exposure points evaluated in the modeling analysis is briefly summarized below.

Direct Inhalation

For estimating individual exposure from direct inhalation of windblown CKD contaminants, USGS quadrangle maps and site visits were used to identify the nearest residence to the CKD pile in any compass direction. For estimating the total exposed population at the site, the total number of residences surrounding the facility were identified out to a distance of 10 kilometers from the CKD pile. (In addition to estimating direct inhalation of airborne contaminants, indirect exposure resulting from wind erosion of CKD particulates were estimated in several of the other exposure pathways described below.)

Surface Water

Sources of drinking water in the vicinity of the five baseline facilities were identified through contacts with the water utilities serving the vicinity of each facility, and it was determined that none of the five areas withdrew surface water for public water supplies downstream from the CKD facilities. Consequently, exposures were not estimated for ingestion of surface water as a source of drinking water. Surface water exposures through recreational swimming were estimated at the point in the nearest surface water body closest to the CKD pile. (Exposures through ingestion of locally-caught fish in the nearest surface water body were also estimated as part of the foodchain analysis.)

Ground Water

The extent of ground-water usage as a local drinking water source was determined through contacts with the water utilities serving communities around each facility. The Agency determined that one of the five facilities had significant private ground-water usage downgradient of the site, while three facilities primarily served by public water supplies were likely to have only limited private well usage; one of the facilities had no ground-water usage within one mile of the facility. Accordingly, individual ground-water exposures were estimated at the nearest residence

downgradient of the four facilities with potential ground water usage, while ground-water exposures were not estimated at the fifth facility. Exposure to the potentially affected population at the one site with significant ground-water usage were based on all residences located downgradient of the facility within a distance of two miles; at the other three facilities population risks were not estimated (only individual risks).

Incidental Soil Ingestion

Exposure due to the incidental ingestion of soil were estimated at the residence nearest to each facility that could potentially receive atmospheric deposition and/or erosion from the CKD facility. This location generally represented the closest residence identified for estimating direct inhalation exposures.

Foodchain Pathway

The foodchain pathway analysis generated constituent concentrations in vegetables, beef, milk, and fish at different exposure points in the vicinity of the facility. For vegetables, beef, and milk, foodchain concentrations were estimated at the agricultural field or pasture nearest to the facility. The locations of these fields were identified during the site visits (at one facility), or estimated based on the percentage of agricultural land in the county (at the other four facilities). While these fields and grazing lands were intended to be located on family farms for purposes of the exposure assessment, the actual crops grown and use of these fields was not known (and thus may significantly overstate actual foodchain exposures).[15] Constituent concentrations in fish were estimated at the nearest point in the surface water body closest to the facility. It was not known what edible species of fish were present in these streams or whether the streams are actually used for recreational fishing. Consequently, this scenario may also overstate actual foodchain exposures through fish ingestion.[16]

Exposure Assessment and Risk Characterization

The Agency followed standard guidance, methods, and practice in estimating risks due to exposures at the five baseline facilities.[17,18,19] Best estimate and upper end individual lifetime cancer and noncancer effects were calculated at each exposure point using the best estimate and upper end exposure concentrations from the MMSOILS modeling results. (The Technical

---

[15] The foodchain exposure pathway analysis was based on the assumption that vegetables grown for human consumption originate in a field located adjacent to the pasture used for grazing the beef and dairy cattle.

[16] The Agency is currently revising its "Methodology for Assessing Health Risks Associated with Indirect Exposure to Combustor Emissions," Interim Final, EPA/600/6-90-003, January 1990, and consequently this foodchain risk methodology is subject to revision.

[17] U.S. EPA, 1989. Risk Assessment Guidance for Superfund Volume I: Human Health Evaluation Manual (Part A). Office of Emergency and Remedial Response. EPA/540/1-89/002.

[18] U.S. EPA, 1991. Human Health Evaluation Manual, Supplemental Guidance: Standard Default Exposure Factors. Office of Emergency and Remedial Response. OSWER Directive: 9285.6-03.

[19] U.S. EPA, 1989. Exposure Factors Handbook. Office of Health and Environmental Assessment. EPA/600/8-89/043.

Background Document for this human health and environmental risk assessment provides significantly greater detail on the exposure and risk assessment methodologies.)

In this analysis, the Agency estimated individual excess cancer risk for each pathway, which represents the increase above background in the probability of developing cancer over an individual's lifetime in response to contaminant exposures. To estimate excess cancer risks, the Agency multiplied the daily intake of each carcinogen by the cancer slope factor published in EPA's Integrated Risk Information System (IRIS).[20] The highest individual risk for each exposure pathway is the sum of cancer risks calculated for each carcinogenic constituent resulting from exposures at the nearest location to the facility at which an exposure through that pathway could occur (e.g., for the ground-water pathway, the nearest point of ground-water use downgradient of the facility). Total pathway cancer risks represent the constituent-specific risks aggregated across chemicals within each pathway (following Agency guidance, cancer risks were not aggregated across exposure pathways).

The Agency evaluated noncancer effects by determining the ratio of the estimated dose of a particular contaminant to a standard Agency reference dose (RfD). These ratios are referred to as "hazard quotients." Hazard quotients greater than one for individual chemicals represent an exceedance of an Agency threshold of concern and the possibility of an adverse health effect. Total individual noncancer effects were evaluated by adding the chemical-specific hazard quotients within each pathway, referred to as the "hazard index."

Direct Ingestion Pathways

Exposures through direct inhalation, drinking water ingestion, incidental soil ingestion, and recreational ingestion of surface water were estimated using national average exposure rates, frequencies, and durations reported in standard Agency guidance documents.

Foodchain Pathways

Exposures for the vegetable, beef, and milk foodchain pathways were based on the assumption that the exposed individuals live on a family farm at which they raise a portion of their annual consumption of these food products (or live in a farming community where a significant portion of their food could originate from one local source). Moreover, it was assumed that the home-grown vegetables they consume all originate from the identified agricultural field receiving CKD from the facility, and that their beef and dairy cattle are provided feed from pasture land in the same location. While the extent of consumption of home-grown vegetables, beef, and dairy products will vary significantly on a site-specific basis depending on the types of crops grown, the type of farm, and individual behavior, the considerable variation in exposures on a site-specific basis could not be accounted for in this analysis. In general, it is believed that these exposure estimates may significantly overstate actual consumption patterns. Exposures through ingestion of recreationally caught fish were estimated using behavior patterns for the average individual in the general population as reported in standard Agency guidance.

---

[20] U.S. Environmental Protection Agency, Integrated Risk Information System Database.

Sensitive Subpopulations (Childhood Exposures to Lead)

Exposures to lead were calculated for one sensitive subpopulation -- children up through the age of seven years located at the residence nearest to each baseline facility. Because EPA has not published a reference dose for this systemic toxicant, the lead uptake/biokinetic (UBK) model was used to estimate the increased blood lead levels from exposure to lead in CKD.[21] The lead uptake/biokinetic (UBK) model provides a method to predict blood lead levels in target populations (i.e., children ages 0 to 7) exposed to lead in air, diet, drinking water, indoor dust, soil, and paint. Based on user-supplied lead concentrations in each of these potential sources of exposure, the UBK model estimates the relative contributions of each exposure source and the total lead uptake from all sources.

The model presents several different indicators of potential health effect from lead. First, it generates a distribution of blood lead levels for each year of the exposure period (ages 0 to 7) based on the total lead uptake. Second, the UBK model estimates the geometric mean blood level in the exposed population. Finally, the model estimates the percentage of the exposed population that is expected to be at or above a specified blood-lead threshold level (a blood lead level greater than 10 μg/dL was assumed to be the threshold of interest, based on exposure and effect relationships that have been established in infants and children at blood lead concentrations as low as 10 μg/dL).[22]

The UBK model accepts inputs for several sources of lead exposure not estimated in this CKD risk analysis: paint ingestion, indoor dust, and drinking water exposures resulting from lead solder pipes. For these sources, which were assumed to be unaffected by the CKD facilities, average background lead concentration levels presented as default values in the UBK model were employed. For those exposure routes used in the UBK model that were estimated by MMSOILS in this analysis, which included dietary intakes (through vegetables, beef and milk, and fish), soil intakes, and atmospheric exposures, the estimated lead concentrations from MMSOILS were added to the national average background values presented in the UBK model. Thus, the blood lead levels estimated in this analysis represent an increment above the national average background childhood blood lead levels estimated by the UBK model resulting from exposures to CKD.

Aquatic Ecological Effects

The Agency estimated potential aquatic ecological effects from CKD releases by relating ambient surface water constituent concentrations to benchmarks for the protection of aquatic life. These benchmarks were either published EPA chronic ambient water quality criteria (AWQC) for the protection of aquatic life, or, where these were not available, lowest observed adverse effect levels (LOAELs) divided by a factor of 5 to account for variations in species sensitivity. Exhibit 6-11 shows the eight constituents for which aquatic ecological benchmarks were available based on AWQC documents and their values. AWQCs are intended to protect

---

[21] U.S. EPA, 1991. "A PC Software Application of the Uptake/Biokinetic Model, Version 0.5," Office of Health and Environmental Assessment (ECAO-CIN-2178A).

[22] A threshold for the noncancer effects of lead is believed to lie within or below the 10 - 15 ug/dL range. Note, however, that this range is regarded as a "level of concern" warranting attention from a medical viewpoint and not a dose level or threshold below which no adverse health effects would be expected to occur. (From U.S. Environmental Protection Agency, "Technical Support Document on Lead," Office of Research and Development, ECAO-CIN-757 (January 1991).

aquatic communities against adverse effects on structure or function by protecting 95 percent of the species against adverse population-level effects. These adverse effects are species-dependent and could include reduced reproduction, growth, or survival. Effects of contaminated sediments on benthic communities are not considered.

Exhibit 6-11

Aquatic Ecological Benchmark Levels

Constituents	Aquatic Ecological Benchmark (mg/L)	Source
Antimony	3.2×10^{-1}	LOAEL
Arsenic (III)	1.9×10^{-1}	AWQC
Beryllium	1.1×10^{-3}	LOAEL
Cadmium*	1.1×10^{-3}	AWQC
Chromium (VI)	1.1×10^{-2}	AWQC
Lead*	3.2×10^{-3}	AWQC
Thallium	8.0×10^{-3}	LOAEL
2,3,7,8-TCDD	2.0×10^{-9}	LOAEL

* Assumes a water hardness of 100 mg/L $CaCO_3$

Sensitivity Analysis of Higher Risk Potential Scenarios

The Agency conducted a sensitivity analysis of various factors that could indicate the potential for higher risks from CKD management than exhibited in the baseline risk modeling analysis. A selected number of low probability but potentially higher risk waste characteristics, environmental settings, and exposure assumptions were identified based on site visits, reports from CKD facilities (other than those modeled in the baseline analysis), and in some cases, hypothetical scenarios that could potentially occur but were not specifically observed. In this sensitivity analysis, the Agency examined the extent to which these selected higher risk potential factors, when combined with the baseline central tendency and high end modeling scenarios, could indicate a potential for more significant risks resulting from CKD management.

Two of the sensitivity analysis scenarios examined the sensitivity of the baseline results to changes in waste characteristics:

- The highest measured dioxins scenario estimated the risks associated with the disposal of CKD containing the highest levels of 2,3,7,8-substituted chlorinated dibenzo-p-dioxins (CDDs) and dibenzo-furans (CDFs) measured by EPA during its CKD facility sampling and analysis program. This scenario examined the

extent to which the baseline central tendency and high end risk estimates would change if this high CDD/CDF wastestream were present at each of the facilities.

- The 95th percentile inorganic constituent concentrations scenario evaluated the change in risk associated with the disposal of CKD exhibiting the 95th percentile highest constituent concentrations at all five baseline facilities. These 95th percentile concentrations reflect data taken from the EPA sampling and analysis effort and the PCA survey.[23] Because of the low probability that a wastestream containing each of the inorganic CKD constituents at their respective 95th percentile concentration could be found at any single facility, this scenario does not examine the total incremental risk associated with this wastestream characterization, but rather examines only the potential for individual constituents to exceed health effects levels of concern.

Three sensitivity analysis scenarios examined the sensitivity of the baseline risk modeling results to higher risk potential environmental transport scenarios or CKD management practices:

- An EPA damage case study identified a CKD pile located directly adjacent to an agricultural field with uncontrolled erosion of CKD impacting the field. To simulate this scenario, the transport characteristics at two of the facilities modeled in the baseline analysis were modified to simulate exposures associated with the location of an agricultural field or pasture directly next to a CKD pile lacking erosion controls. This scenario focused on the potential effects of this setting on the terrestrial foodchain pathway alone.

- Several EPA damage case studies identified CKD piles that were located directly adjacent to surface water bodies with uncontrolled erosion of CKD entering the water bodies. To simulate this scenario, the environmental transport characteristics at two of the facilities modeled in the baseline analysis were modified to simulate the location of a surface water body (one facility had a river and the other a lake) next to the CKD pile. This sensitivity scenario examined the incremental risks to the recreational swimming and fish ingestion exposure pathways.

- EPA identified several facilities practicing CKD management underwater in a quarry, at which CKD was disposed in a quarry that had been excavated during cement production and that subsequently was filled with water entering the quarry through ground-water seepage. This scenario focused on examining the potential for increased risks through the ground-water transport pathway, although it also examined potential reductions in risk potential through the atmospheric and soil erosion pathways.

The sixth scenario examined in the sensitivity analysis examined the incremental change in foodchain risks associated with an assumption that an individual could rely on vegetables, beef and milk, and fish originating in locations affected by the CKD pile as major components of their diet:

---

[23] Portland Cement Association, 1991. *op. cit.*

- Potential high exposure due to subsistence food consumption was addressed by estimating exposures of two categories of individuals: subsistence farming and subsistence fishing. The subsistence farming scenario simulates the exposures that could be received by an individual ingesting a high percentage of homegrown produce, beef, and dairy products. For this hypothetical scenario, seventy-five percent of the subsistence farmer's beef, milk, and vegetables are assumed to originate in the CKD-contaminated agricultural field or pasture. The subsistence fishing scenario simulates the exposures to an individual that ingests a high proportion of fish caught locally in a CKD-contaminated surface water body. For this scenario, 75 percent of the fish consumed by the subsistence fisherman is assumed to be caught in the contaminated water body nearest to the facility. These exposure scenarios represent relatively infrequent behavior patterns that have not actually been observed or reported at any of the facilities examined by the Agency.

Results of On-site Risk Modeling

The results from the on-site risk modeling analysis are presented in this section, first for the baseline on-site facilities and then for the sensitivity analysis of higher risk scenarios. Unless otherwise indicated, all cancer risks are reported in terms of excess individual lifetime risk of cancer. Noncancer effects are reported using the previously described hazard index.

Baseline On-Site CKD Management

The cancer and noncancer baseline modeling results are presented below for the direct exposure pathways (i.e., air, ground water, surface water, and soil ingestion) and the foodchain pathways (i.e., vegetables, beef and milk, and fish).

Baseline Direct Exposure Pathway Risks

The Agency calculated a range of high end cancer risks corresponding to both a "best estimate" of facility transport conditions and an "upper bound" characterization of facility transport parameters. This range of high end values presented for each pathway, as shown in Exhibit 6-12, reflects the facility with the highest estimated risks in each respective pathway from among the five modeled facilities. As anticipated in the previous qualitative ranking of risk potential, different facilities were responsible for the highest risk estimated in each of the different pathways.

The central tendency results for the distribution reflect the best estimate of risks from the three facilities with the lowest risk estimates. The central tendency results are presented as a range "less than" the highest value estimated for these three facilities. Thus, the Agency believes that best estimate of the central tendency will generally be less than the reported value (see Exhibit 6-12).

The central tendency baseline modeling results generally indicate a low potential for adverse health effects from current CKD management via the direct exposure pathways. Of the five pathways presented in Exhibit 6-12, the surface water pathway exhibited the highest central tendency risks, estimated at less than an individual cancer risk level of $1x10^{-8}$. The other direct exposure pathway risks were also negligible. The central tendency results for noncancer health effects were all more than four orders of magnitude below the health effects threshold (i.e., the

hazard quotients were less than $1x10^{-4}$ in all five direct exposure pathways). These results suggest that most CKD management facilities will not present significant hazards through direct exposure pathways.

The high end risks generally indicated a low threat through the direct exposure pathways, with the exception of the surface water pathway. High end risks resulting from exposures during recreational swimming ranged from $4x10^{-6}$ to $2x10^{-5}$, attributable to arsenic concentrations in the surface water body. The upper bound of the high end risks in the other four pathways never exceeded $1x10^{-6}$, while the best estimate risks at the high end facilities were all less than $1x10^{-9}$. The only noncancer effect within one order of magnitude of the reference dose were for recreational swimming exposures, resulting from the combined systemic effects of arsenic and cadmium. However, the noncancer estimates did not exceed a hazard quotient of 1.0, indicating a low potential threat in the surface water pathway. The high end noncancer estimates in the other four pathways were negligible.

These surface water risks reflect potential exposures in the lake located near Facility J. Because MMSOILS assumes that the lake acts as a sink both for CKD eroding from the pile and subsequently traveling overland to the lake during its operating period, and for windblown CKD that reaches the lake from the pile, it indicates a potential for accumulation of CKD constituents in the lake bed sediments. The potential surface water effects are based on the partitioning of the CKD constituents from the lake bed sediments into the water column. Because of the relative simplicity of the lake simulation component of MMSOILS, the Agency believes these results could overstate the actual high end risks at this facility. Additionally, when fully implemented, the Agency's recently promulgated stormwater runoff control regulations (described in Section 7.2.1 of Chapter 7) could substantially mitigate or eliminate human health risks from surface waters contaminated by stormwater runoff from CKD piles. These regulations would not, however, control delivery of CKD contaminants to surface waters via ground-water or air pathways.

Exhibit 6-12

Baseline On-Site Management Cancer Risks for Direct Exposure Pathways for 15 Case Study Facilities

Exposure Pathway	Excess Individual Lifetime Cancer Risk		
	High End		Central Tendency
	Best Estimate	Upper Bound	
Ground water	$2x10^{-9}$	$6x10^{-8}$	Less than $1x10^{-18}$
Surface water	$4x10^{-6}$	$2x10^{-5}$	Less than $1x10^{-8}$
Direct inhalation	$2x10^{-12}$	$3x10^{-12}$	Less than $1x10^{-14}$
Soil ingestion - adult	$5x10^{-12}$	$1x10^{-7}$	Less than $1x10^{-13}$
Soil ingestion - child	$8x10^{-12}$	$2x10^{-7}$	Less than $1x10^{-12}$

Baseline Foodchain Pathway Risks

As shown below in Exhibit 6-13, while the baseline foodchain pathway results indicated a somewhat higher potential for health effects than in the direct exposure pathways, the central tendency individual cancer risks were still below $1x10^{-6}$, with the beef and milk and fish exposure routes showing negligible central tendency risks at levels less than $1x10^{-8}$. The central tendency noncancer effects were also more than two orders of magnitude below the threshold effects level (i.e., the hazard quotients were all less than $1x10^{-2}$), indicating a negligible likelihood of noncancer impact at those CKD facilities represented by the central tendency estimate.

The high end foodchain estimates varied by pathway, with the ingestion of fish resulting in the highest risks (ranging from $4x10^{-6}$ to $4x10^{-5}$) due to the combined cancer effects of arsenic, beryllium, and potassium-40. High end risks from the ingestion of vegetables ranged from $2x10^{-6}$ to $3x10^{-6}$, resulting from arsenic uptake into the vegetables. The beef and milk exposure pathway results were all less than $1x10^{-6}$ and ranged from $2x10^{-7}$ in the best estimate to $4x10^{-7}$ in the upper bound. The high end noncancer foodchain effects exceeded a hazard quotient of 1.0 in one pathway: ingestion of fish at Facility J resulted in an estimated high end hazard quotient ranging from 4.1 to 16 due to exposures to cadmium. In addition to cadmium, chromium also contributed to this high end noncancer effect with hazard quotients ranging from 0.17 to 0.66. The high end noncancer effects were negligible in the other two foodchain pathways.

Exhibit 6-13

Baseline On-Site Management Cancer Risks for Foodchain Exposure Pathways for 15 Case Study Facilities

Exposure Pathway	Excess Individual Lifetime Cancer Risk		
	High End		Central Tendency
	Best Estimate	Upper Bound	
Vegetable	$2x10^{-6}$	$3x10^{-6}$	Less than $1x10^{-6}$
Beef & Milk	$2x10^{-7}$	$4x10^{-7}$	Less than $1x10^{-8}$
Fish	$4x10^{-6}$	$4x10^{-5}$	Less than $1x10^{-8}$

In estimating the terrestrial foodchain effects (i.e., vegetables, beef and milk), the assumptions concerning the amount of erosion transported from the CKD pile to the agricultural field may result in an overestimate of the impacts in the high end analysis. While the Agency observed effective erosion controls at the five baseline facilities that were believed to effectively restrict the off-site movement of CKD by the erosion pathway, it was believed that these erosion controls could potentially fail in extreme storm events or due to failure of engineered controls. Consequently, the high end analysis adopted a worst case assumption at three of the facilities that these erosion controls would completely fail. Because the high end risks in the terrestrial foodchain pathway were associated with two of these facilities, these high end results may overstate the likely upper bound risks to the foodchain pathway at these facilities.

In total, the baseline modeling analysis simulated the release, fate, and transport of 14 constituents (or in the case of CDDs and CDFs, groups of constituents) that have been detected in CKD and have known cancer or noncancer health effects that could be modeled using current Agency guidance and available data. Exhibit 6-14 shows all of these constituents and the exposure pathways where they exceeded a cancer risk of $1x10^{-6}$ or a hazard quotient of 0.1.

Exhibit 6-14

Constituents Contributing to Adverse Health Effects In On-site CKD Risk Modeling Analysis

Constituents of Concern	Exposure Pathways								Health Effects
	Direct Inhalation	Recreational Swimming	Ground Water Ingestion	Residential Soil Ingestion (Adult)	Residential Soil Ingestion (Child)	Vegetables	Beef & Milk	Fish	
	CT HE	CT HE	CT HE	CT HE	CT HE	CT HE	CT HE	CT HE	
Antimony									Decreased blood cell synthesis
Arsenic		√				√		√	Skin cancer and skin damage
Barium									Increased blood pressure
Beryllium								√	Gross tumors
Cadmium		√						√	Kidney damage
Chromium								√	Central nervous system effects
Thallium								√	Liver damage
2378 TCDD Equivalents									Multiple cancers
Potassium 40								√	Cancer
Radium 226/228									Cancer
Uranium 234									Cancer
Uranium 238									Cancer
Thorium 230									Cancer

Exhibit 6-14 illustrates on a constituent-specific basis that none of the central tendency estimates exceeded a cancer risk of $1x10^{-6}$ or hazard quotient of 0.1. The exhibit shows that the high end risks were the result of exposures to six CKD constituents: arsenic, beryllium, cadmium, chromium, potassium-40, and thallium. Exposures to CDDs/CDFs were not of concern in the baseline risk analysis.

Arsenic, which can cause both systemic and carcinogenic effects, contributed to cancer risks and/or noncancer effects in three high end exposure pathways: exposures during swimming, ingestion of vegetables, and ingestion of recreationally-caught fish. In the swimming and fish ingestion exposure pathways, arsenic exceeded both cancer and noncancer levels, while in the vegetable ingestion pathway, it only indicated a potential threat for its cancer effect (it reached a level just exceeding $1x10^{-6}$). Cadmium resulted in exposures exceeding a noncancer hazard quotient of 0.1 in two high end pathways at one facility: exposures during swimming (ranging from 0.056 to 0.22) and ingestion of fish (ranging from 3.8 to 15). The remaining three constituents contributed to health effects of potential concern only in the high end fish ingestion scenario. Of these constituents, beryllium and potassium-40 indicated potential cancer effects, while thallium exceeded a noncancer hazard quotient of 0.1 for fish ingestion at one facility.

As mentioned previously, full implementation of the Agency's recently promulgated stormwater runoff control regulations could substantially limit human health risks from the ingestion of fish from surface waters contaminated by stormwater runoff from CKD piles. These regulations would not, however, limit the migration of CKD contaminants to surface waters via ground-water or air pathways.

Baseline Estimated Increased Blood Lead Levels

The Agency's methodology for characterizing potential adverse health effects resulting from exposures to lead generated an estimate of the increased blood lead levels above national background levels for children. Using the default assumptions in the UBK model for national average background lead concentrations in the various exposure routes through which children could be exposed to lead, it estimated a national average mean blood lead level of 3.14 μg/dL in children ages one through seven. Thus, in those cases where releases from the CKD facility did not increase exposures to lead above assumed national background levels, the UBK model would estimate a mean blood lead level of 3.14 μg/dL. Where releases from the CKD facility increased exposures to lead, the resulting estimate of the mean blood lead level would represent an increment above this national background estimate.

The estimated mean blood lead levels exceeded the baseline value of 3.14 μg/dL at three of the five baseline facilities, while the two remaining facilities were estimated to result in no increase above national background levels. The estimates exceeded the blood lead effect level of concern of 10 μg/dL at two of these facilities. The highest exceedance took place at Facility J, where the best estimate mean blood lead level was approximately 14 μg/dL, while the upper bound estimate was approximately 48 μg/dL. These increased exposures above background primarily reflect the simulated ingestion of lead in fish caught in the lake at this facility; exposure to lead through the other exposure routes were generally below the national average background levels. Facility A also exceeded the national average background estimates with a best estimate mean blood lead level of about 5 μg/dL and a upper bound estimate of about 13 μg/dL. Finally, the central tendency estimates at Facility F did not exceed background, while the upper bound estimate was approximately 8 μg/dL (which is below the health effect level of concern for blood lead).

Most of the blood lead level estimates indicating an increase above the national background were attributable to ingestion of fish caught in the nearest surface water body to the respective facilities. Because these blood lead estimates are based on the conservative assumption that 20 percent of the child's fish originates in the contaminated surface water body, the Agency believes that they most likely overstate that actual lead exposures associated with most CKD facilities.

Baseline Aquatic Ecological Effects

The examination of aquatic ecological effects focused on eight constituents for which aquatic ecological benchmarks were available (see Exhibit 6-11): antimony, arsenic, beryllium, cadmium, chromium (VI), lead, thallium, and 2,3,7,8-TCDD. In the high end analysis, five of these eight constituents exceeded their aquatic ecological benchmarks (arsenic, beryllium, cadmium, chromium [VI], and lead). The highest values occurred in the nearby lake at Facility J, and ranged from about two times the benchmark value for arsenic to about 300 times the benchmark for cadmium (see Exhibit 6-15 below). Given the relative simplicity of the MMSOILS lake exposure model, it is likely that these values could significantly overstate the actual constituent concentrations in this lake. As Exhibit 6-15 shows, none of the constituents exceeded their respective aquatic ecological health effects benchmarks in the central tendency analysis.

Exhibit 6-15

Results of Central Tendency and High End Ecological Effects Analysis

Modeling Scenario	Ratio of Surface Water Concentration to Ecological Effects Criteria				
	Arsenic	Beryllium	Cadmium	Chromium	Lead
High End	14 - 50	0.5 - 2	80 - 320	37 - 150	14 - 54
Central Tendency	Below AWQC	Below LOAEL	Below AWQC	Below AWQC	Below AWQC

Again, as mentioned previously, full implementation of the Agency's recently promulgated stormwater runoff control regulations could substantially mitigate or eliminate aquatic ecological damages to surface waters attributable to stormwater runoff of CKD contaminants. These regulations would not, however, limit the migration of CKD contaminants to surface waters via ground-water or air pathways.

Sensitivity Analysis of Hypothetical Higher Risk Scenarios

The sensitivity analysis of potentially higher risk scenarios quantified the change in the baseline risks associated with the superimposition of selected high risk potential facility and environmental setting characteristics on the baseline facility characterization. The Agency examined six high risk potential scenarios, which selectively modified the baseline facility estimates as described earlier. The results for each of these six scenarios are presented below in the following order: maximum measured dioxin concentrations; 95th percentile metal concentrations; location directly adjacent to an agricultural field; location directly adjacent to a

receiving surface water body; management underwater in a quarry; and risks to possibly highly exposed farmers and fisherman.

Maximum Measured Dioxin Concentrations

This sensitivity analysis examined the change in risks that would occur at the five baseline facilities, based on the hypothetical management of CKD containing the highest measured CDD/CDF concentrations found in EPA's sampling at 11 cement plants (see the Docket for the report on the sampling and analysis results). In order to estimate the sensitivity of the original case-study plant risk estimates to CDD/CDF concentrations, the highest CDD/CDF measured concentrations were substituted into each of the five original facility settings. This scenario is presented to provide an upper tail estimate of potential CDD/CDF risks nationwide. (Because the Agency has only published cancer slope factors for CDD/CDF congeners and has not published reference doses, this sensitivity analysis only examined incremental individual cancer risks and did not address noncancer effects.)

Exhibit 6-16 presents the high end and central tendency results for this sensitivity analysis. In the three primary direct inhalation and ingestion pathways (i.e., ground water, surface, and air), the results were found to be identical to the original baseline risks (presented previously in Exhibit 6-12). The lack of incremental increase in risks above the baseline estimates reflects the fact that CDDs/CDFs did not contribute to these baseline exposure pathway risks due to their lack of mobility in subsurface systems, low solubility in water, and relatively low concentrations in air. The sensitivity analysis did indicate a potential increase in the soil ingestion pathways. The central tendency risks increase by about three orders of magnitude, although they remain negligible (below $1x10^{-9}$). The high risks increased to a similar degree, resulting in risks to adults ranging from $3x10^{-10}$ (best estimate) to $7x10^{-6}$ (upper bound). The risks to children ingesting soil increased to $1x10^{-9}$ in the best estimate to $2x10^{-5}$ in the upper bound.

Exhibit 6-16

Sensitivity Analysis of Maximum CDD/CDF Cancer Risks for Direct Exposure Pathways

Exposure Pathway	Excess Individual Lifetime Cancer Risk		
	High End		Central Tendency
	Best Estimate	Upper Bound	
Ground water	Identical to Baseline	Identical to Baseline	Identical to Baseline
Surface water	Identical to Baseline	Identical to Baseline	Identical to Baseline
Direct inhalation	Identical to Baseline	Identical to Baseline	Identical to Baseline
Soil ingestion: adult	$3x10^{-10}$	$7x10^{-6}$	Less than $1x10^{-10}$
Soil ingestion: child	$1x10^{-9}$	$2x10^{-5}$	Less than $1x10^{-9}$

The sensitivity analysis indicated a similar increase in risks in the foodchain exposure pathways (Exhibit 6-17). Because the baseline estimates had been higher in the foodchain pathways, the foodchain risks in the sensitivity analysis were correspondingly higher. The risks to

the central tendency facilities were about two orders of magnitude greater than in the baseline analysis, and were less than $1x10^{-5}$ in the beef and milk and fish pathways, and less than $1x10^{-4}$ for the ingestion of vegetables. In the high end analysis, the highest risks were found in the fish ingestion pathway and reached an upper bound value of $2x10^{-3}$. Ingestion of vegetables and beef and milk resulted in risks ranging from $2x10^{-4}$ to $6x10^{-4}$.

In both the terrestrial foodchain scenarios and the soil ingestion scenarios, the upper bound risks reflect an assumption concerning the failure of erosion controls at the facilities. As was the case in the baseline analysis, the results presented in this maximum CDD/CDF concentration sensitivity analysis are likely to overstate the risks associated with CKD management.

Exhibit 6-17

Sensitivity Analysis of Maximum CDD/CDF Cancer Risks for Foodchain Exposure Pathways

Exposure Pathway	Excess Individual Lifetime Cancer Risk		
	High End		Central Tendency
	Best Estimate	Upper Bound	
Vegetable	$2x10^{-4}$	$3x10^{-4}$	Less than $1x10^{-4}$
Beef & Milk	$2x10^{-4}$	$6x10^{-4}$	Less than $1x10^{-5}$
Fish	$3x10^{-4}$	$2x10^{-3}$	Less than $1x10^{-5}$

95th Percentile Metals Concentrations

The 95th percentile metals concentration sensitivity analysis examined on a constituent-specific basis the potential for additional CKD constituents to exceed health effects levels of concern. This scenario was evaluated by scaling the baseline risk estimates for each constituent based on the ratio of the metals concentrations in the baseline facility sample and the 95th percentile metals concentrations (see the Docket for the results of EPA's CKD sampling and analysis program). This simplified approach assumes that the risk results in each exposure pathway will be linear with respect to constituent concentration. While this approach may be as accurate as evaluating all of these scenarios directly with MMSOILS, the Agency believes it represents a reasonable estimation of the risks associated with these higher constituent concentrations.

The primary incremental change over the baseline results in this sensitivity analysis was the increased noncancer effects associated with thallium. While it was only within one order of magnitude of the reference dose for the high end fish ingestion in the baseline analysis, it was within one order of magnitude of the reference dose in four additional high end exposure pathways using the 95th percentile concentrations: residential soil ingestion by adults and children, vegetables, and beef and milk. In one of these pathways, vegetable ingestion, thallium was within one order of magnitude of the threshold concentration in the central tendency analysis.

Only two other constituents were within one order of magnitude of the reference dose in a single pathway in addition to those found in the baseline. Antimony had a hazard quotient of 0.12 in the high end surface water pathway. Chromium had a high end hazard quotient of 0.49 in the surface water pathway.

Location Adjacent to an Agricultural Field

This sensitivity scenario focused on the potential for increased risks when an agricultural field or pasture was located directly adjacent to the CKD pile without erosion controls. Accordingly, this scenario only compares the baseline and sensitivity analysis results for the terrestrial foodchain pathways (i.e., ingestion of vegetables and ingestion of beef and milk). This sensitivity analysis only examined two of the five baseline facilities: Facility F (representing the high end estimate) and Facility J (representing the central tendency estimate).

The sensitivity results indicated that risks could increase in the baseline vegetable and beef and milk exposure pathways by between one and two orders of magnitude if the facilities were located directly next to an agricultural field (Exhibit 6-18). Because the scenario assumes no erosion loss during transport between the CKD pile and the field, this high risk scenario would be expected to result in significantly higher risks than at the actual baseline facilities. Both the beef and milk and vegetable exposure routes had similar high end risks, approximately $4x10^{-5}$. The central tendency risks were somewhat lower, with the vegetable risks about one order of magnitude higher than the beef and milk risks.

Noncancer effects in this sensitivity analysis exceeded the reference dose, unlike in the baseline analysis. The high end hazard quotient for the vegetable pathway was about 6, while the high end hazard quotient for the beef and milk pathway was about 3. The central tendency vegetable pathway hazard quotient was about 5, while the central tendency beef and milk hazard quotient, with a value of about 0.8, did not exceed the reference dose.

Exhibit 6-18

Sensitivity Analysis of Location Adjacent to Agricultural Field for Foodchain Exposure Pathways

Exposure Pathway	Excess Individual Lifetime Cancer Risk		
	High End		Central Tendency
	Best Estimate	Upper Bound	
Vegetable	$3.8x10^{-5}$	$4.2x10^{-5}$	Less than $3x10^{-5}$
Beef & Milk	$4.0x10^{-5}$	$4.3x10^{-5}$	Less than $4x10^{-6}$

Location Adjacent to a Surface Water Body

This sensitivity scenario focused on the potential for increased risks when a surface water body was located directly adjacent to the CKD pile. Because this scenario only affects the exposure pathways associated with the ambient concentrations in surface water, this scenario only examined the recreational swimming and fish ingestion pathways. This sensitivity analysis examined two of the five baseline facilities, both of which are representative of the high end risks: Facility F (representing the high end estimate for a facility bordering a river) and Facility J (representing the high end estimate for a facility bordering a lake). Central tendency risks were not estimated in this sensitivity analysis, which only examined potential changes to the high end estimates.

The high end results for the adjacent surface water scenario showed increased health effects in the recreational swimming and fish ingestion pathways (Exhibit 6-19). In the recreational swimming scenario, the risks were about one order of magnitude higher than the baseline risks, while the noncancer effects reached a maximum hazard quotient of 1.0 in one case. In the fish ingestion scenario, the sensitivity analysis risks were between five and seven times higher than in the baseline analysis. The most significant change in the sensitivity analysis was associated with the increased noncancer effects in the fish ingestion scenario, which reached a maximum hazard quotient of 35 due to uptake of cadmium.

Exhibit 6-19

Sensitivity Analysis of Location Adjacent to Surface Water for Direct and Foodchain Exposure Pathways

Exposure Pathway	Excess Individual Lifetime Cancer Risk		
	High End		Central Tendency
	Best Estimate	Upper Bound	
Recreational Swimming	2.4×10^{-5}	3.3×10^{-5}	Not evaluated
Fish Ingestion	2.3×10^{-5}	3.2×10^{-4}	Not evaluated

Management Underwater in a Quarry

This scenario simulated the increased potential for ground-water contamination resulting from disposal of CKD in a quarry that subsequently fills with water due to ground-water seepage. This sensitivity analysis scenario generated the highest ground-water estimates among all the baseline and hypothetical scenarios. The best estimate ground-water effects, however, remained below a cancer risk of 1×10^{-7}, and more than four orders of magnitude below the noncancer effects level. The high end individual cancer risks reached an upper bound value of about 7×10^{-7}, while the noncancer hazard quotient was within one order of magnitude of a potential effect.

While this sensitivity analysis scenario was not designed to examine risks in the other pathways, the results indicated that this scenario would have the lowest air, surface water, and foodchain effects. Because the CKD is managed underwater and below grade, there is minimal

potential for air emissions and erosion run-off, both of which were primary driving forces in the soil and foodchain pathway effects.

Subsistence Level Food Consumption Risks

The Agency evaluated potential risks to individuals highly exposed through two subsistence food consumption scenarios: subsistence farming and subsistence fishing. These hypothetical scenarios evaluated, respectively, potential exposures to an individual that receives 75 percent of his/her vegetables, beef, and milk from sources contaminated by CKD, and an individual that receives 75 percent of his/her diet of fish from a local stream contaminated by CKD. These increased exposure assumptions were superimposed, in turn, on the baseline analysis, the maximum dioxin sensitivity analysis, the adjacent agricultural field scenario (for the subsistence farmer), and in the adjacent surface water body scenario (for subsistence fishing). Thus, this sensitivity analysis examined the combined effects of high foodchain exposures with several individual central tendency and high end risk settings. Consequently, at least in the higher risk scenarios, this analysis tends to compound certain of these highly conservative assumptions related to both the surface water and soil erosion pathways. Accordingly, these results reflect worst case assumptions with a low probability of occurring, and should be evaluated as an indication of the sensitivity of the baseline results to combinations of high risk assumptions.

As would be expected, this scenario produced the highest estimates of risks from the on-site management of CKD. Exhibit 6-20 shows the high end and central tendency cancer risks for subsistence fishing and farming in the baseline analysis, the maximum dioxins analysis, and in the respective adjacent locations sensitivity analyses.

Exhibit 6-20

Sensitivity Analysis of Subsistence Level Food Consumption Risks

Exposure Pathway	Excess Individual Lifetime Cancer Risk		
	High End		Central Tendency
	Best Estimate	Upper Bound	
Subsistence Fishing			
Baseline Analysis	2.0×10^{-4}	1.7×10^{-3}	Less than 6×10^{-7}
Maximum Dioxins	1.3×10^{-2}	6.7×10^{-2}	Not estimated
Adjacent Surface Water	3.5×10^{-3}	1.4×10^{-2}	Not estimated
Subsistence Farming			
Baseline Analysis	1.3×10^{-5}	2.0×10^{-5}	Less than 7×10^{-6}
Maximum Dioxins	4.7×10^{-3}	7.2×10^{-3}	Not estimated
Adjacent Agricultural Field	6.1×10^{-4}	6.7×10^{-4}	Not estimated

The baseline analysis of highly exposed individuals estimated maximum risks at the central tendency facilities of less than $7x10^{-6}$ for subsistence farming and less than $6x10^{-7}$ for subsistence fishing. The central tendency noncancer effects were generally within one order of magnitude of the health effects threshold, but did not exceed a hazard quotient of 1. In reality, the Agency does not believe that the average facility represented by the central tendency estimate is likely to have subsistence-level exposures, as this is believed to be a relatively uncommon practice. But these central tendency results suggest that were such individuals located near CKD facilities, most would receive risks ranging below these values.

The high end baseline and sensitivity estimates indicate the greatest risk potential in these two subsistence exposure scenarios. The subsistence fishing scenario results ranged from $2x10^{-4}$ to $7x10^{-2}$, with the highest risks in the upper bound estimate associated with the maximum dioxin concentration analysis. The subsistence farming results were somewhat lower, ranging from $1x10^{-5}$ to $7x10^{-3}$, with the highest risks again occurring in the maximum dioxin concentration scenario. Generally, the high end subsistence level cancer risks were driven by dioxins, arsenic, and in some cases beryllium, while the noncancer effects were driven by arsenic, cadmium, chromium, and thallium.

6.2.3 Summary of Risks from On-site CKD Management

Based on a limited comparison, the sample of cement plants examined in this analysis appears to be generally representative of typical cement plants across the nation in terms of several factors that influence risks. By prioritizing the plants according to risk potential and focusing the modeling on the five facilities that appear to pose the highest risks, EPA attempted to quantify the upper range of the distribution of risks likely to be associated with the 15 case-study plants. In addition, the analysis was designed to quantify the middle range of this risk distribution as characterized by the "central tendency" estimates. The Agency recognizes that the high end results do not necessarily capture the upper bound of the risks that exist across the full universe of 115 active cement plants, as site-specific factors at some plants may contribute to higher risks than estimated for the 15 sample facilities. Therefore, the Agency also conducted a sensitivity analysis of several hypothetical scenarios representing combinations of potentially higher risk scenarios that may exist at other facilities. The findings pertaining to each primary exposure pathway are presented below.

Ground-water Risks

On-site CKD management practices and hydrogeologic conditions create a moderate potential for ground-water contamination at most of the 15 case-study plants. For example, none of the on-site CKD piles examined in the sample are equipped with a synthetic liner or other engineered control to prevent the migration of contaminants to the subsurface, and most sites exist in locations where the net recharge, depth to ground water, subsurface permeability, and other factors could permit shallow ground-water contamination. However, the potential for any such contamination to pose significant risks is diminished greatly by other factors at the majority of sites, including relatively low concentrations of contaminants in CKD leachate, the tendency for several CKD contaminants to sorb to soil and migrate very slowly in ground water, the distance to potential downgradient receptors, and existing ground-water use patterns. Considering all of these factors on a site-specific basis, the central tendency estimate of individual risks for the ground-water pathway were low at each of the facilities modeled (generally, significantly less than an increased individual cancer risk of $1x10^{-10}$ and noncancer effects several orders of magnitude below the relevant effects thresholds). Even in the high end

and sensitivity analyses, increased individual risks through ingestion of ground water never exceeded $1x10^{-6}$. Additionally, no cancer cases or noncancer effects were predicted for the populations surrounding the model facilities.

Surface Water Risks to Human Health

The potential for significant human health risks from direct exposures to surface water also appears low at present at most of the case-study plants, due to the lack of surface water usage for drinking purposes downgradient of the facilities. Because the surface water was not used for drinking water purposes, the risk modeling analysis examined exposures resulting from recreational swimming. In the central tendency analysis, the human health effects were below an individual cancer risk of $1x10^{-8}$ and several orders of magnitude below relevant noncancer effect thresholds, based on a recreational swimming scenario assuming exposures from dermal absorption and incidental ingestion of surface waters. In the high end analysis, the risk potential was shown to be greater, with individual risks ranging from $4x10^{-6}$ to $2x10^{-5}$. Important factors contributing to the low central tendency risk estimates include the frequent practice of intercepting and diverting stormwater run-off from CKD piles through on-site ditches prior to discharge to surface water bodies, as well as the distance to and dilution capacity (high flow rate) of receiving creeks and rivers. However, the high end and sensitivity analysis modeling results indicate that higher risks from direct exposure to surface water may exist if stormwater run-off is not adequately controlled and receiving waters have a negligible dilution capacity.

Potential human health risk estimates are higher for ingestion of fish from contaminated waters. While central tendency estimate of effects from consumption of fish caught recreationally were found to be less than $1x10^{-8}$ for cancer and well below the noncancer effect threshold, the high end results reached an increased individual cancer risk of about $4x10^{-5}$ and a noncancer hazard quotient for cadmium at a level about ten times higher than its corresponding threshold.

In cases where CKD facilities are located directly adjacent to a surface water body, both the best estimate recreational swimming and fishing scenarios showed increased cancer risks and noncancer effects roughly similar to the baseline high end estimates. In cases where facilities manage CKD containing the highest concentrations of dioxins measured by EPA, however, the estimated upper bound risks could exceed a cancer risk level of one in one thousand.

In cases where an exposed individual receives 75 percent of their fish from the contaminated surface water body (a subsistence fisherman), the risk analysis predicted significant cancer and noncancer effects. While this may be a relatively rare scenario at actual facilities, the modeling analysis showed this practice to be of relatively significant concern were it to occur.

Aquatic Ecological Risks

The risk modeling analysis evaluated the potential for CKD constituents to exceed aquatic ecological benchmark values in receiving surface waters near the plant. The central tendency results showed no values exceeding chronic ambient water quality criteria (AWQC) for the protection of aquatic life. In the high end analysis, five of the fourteen modeled constituents were shown to have a potential for exceeding ecological levels of concern.

Air Pathway Risks from Windblown Dust

The air pathway is of concern for on-site CKD management because the dust is a fine particulate matter that is readily suspendable, transportable, and respirable in air. Many of the sample facilities add water to CKD prior to disposal to form larger clumps or nodules in an effort to keep the dust down, and some dust suppression is achieved naturally as thin surface

crusts form on inactive portions of CKD piles as they are exposed to the elements. Nevertheless, these appear to be temporary and incomplete measures of fugitive dust control at most facilities.

Quantitative modeling of air pathway risks to people living near case-study facilities indicated that wind erosion and mechanical disturbances of on-site CKD piles do not result in significant risks at nearby residences via direct inhalation (e.g., central tendency and high end risks estimates were all less than $1x10^{-11}$ increased individual cancer risk at all five facilities modeled). However, fugitive dust from on-site CKD piles was estimated to be one of two contributors in some cases to higher risk estimates for indirect exposure pathways (which were primarily a result of direct surface run-off from the CKD pile reaching an agricultural field).

Central tendency foodchain cancer risk and noncancer effects for ingestion of vegetables, beef, and milk, were below individual risks levels of $1x10^{-6}$ at all five facilities. In the high end baseline facility scenarios, foodchain risks for ingestion of vegetables reached a maximum of about $3x10^{-6}$. In the sensitivity analysis scenarios, however, these risks reached a maximum of about $2x10^{-4}$ due to uptake of maximum measured CKD dioxin concentrations in vegetables. The estimated risks and hazards for the highly exposed subsistence farmer were significantly higher, reaching a maximum cancer risk exceeding $1x10^{-2}$ in the upper bound sensitivity analysis scenario that simulated the worst case dioxin concentrations. While the frequency of these less common exposure scenarios is likely to be relatively low on a national basis, these risk estimates indicate a potentially significant threat were they to occur.

6.3 EVALUATION OF RISKS FROM OFF-SITE BENEFICIAL USES OF CKD

As discussed in Chapter 8, approximately 943,000 metric tons (1,040,000 tons) of CKD was sold or given away in 1990 for off-site beneficial uses. Most commonly, the dust is used to stabilize hazardous and non-hazardous waste for disposal purposes. About 70 percent of off-site CKD use in 1990 was for this purpose, which is approximately six times more than for any other single use. The next most common off-site use is as a soil amendment, in which CKD mixed with sewage sludge is used as a fertilizer, soil conditioner, or landfill cover. The third most common single use is as a liming agent, in which raw CKD is land-applied directly to agricultural fields. Together, the amount of CKD used as a soil amendment and liming agent accounts for roughly 17 percent (160,000 metric tons) of the total quantity of CKD sold or given away in 1990. A number of other uses also exist, but they are much less common, both in terms of the number of cement plants and quantity of CKD involved. For example, three cement plants sold or gave away about 25,000 metric tons (3 percent of the total) to be used as an additive to concrete and other building materials, and four plants sold or gave away approximately 11,000 metric tons (1 percent of the total) for use in the construction of roads.

This section evaluates the human health and environmental risks associated with these various beneficial uses of CKD. It starts with an overview of the risk assessment approach and methods. The section then evaluates the risks of the following major categories of beneficial uses in turn: hazardous waste stabilization and disposal, sewage sludge stabilization and use, building materials addition, road construction, and agricultural liming. Included in the discussion of sewage treatment and use is an evaluation of the use of stabilized sewage as a landfill cover (one example of soil amendment). Other uses of CKD as a soil amendment (e.g., soil stabilizer) are not addressed because they are expected to pose similar, if not smaller, risks than the direct application of CKD as a liming agent to food crops and pastures. Furthermore, additional uses of CKD, such as an ingredient in livestock feed, a lime-alum coagulant, a mineral filler, an ingredient in lightweight aggregate manufacture, and in glass making, are not evaluated in this

chapter because of their limited use. These potential beneficial uses are described in detail in Chapter 8.

6.3.1 Approach and Methods

As a basis for evaluating risks of off-site uses, EPA collected information on how and where the dust is used. This information was obtained primarily through telephone interviews with personnel at a sample of five principal independent companies that receive, process, and/or market CKD at off-site locations. These companies are listed in Exhibit 6-21.

These five companies were selected for three reasons. First, the Agency selected a number of off-site recipients that is roughly proportional to the relative frequency of each category of off-site use: four recipients that mix CKD with either hazardous waste or sewage sludge, and one recipient each for liming agent, road construction, and building materials addition. Second, each company receives and handles a relatively large amount of CKD. With one exception, the sites received more than 900 metric tons (1,000 tons) of CKD from more than one cement manufacturing plant in 1990. Third, the sample of off-site locations represents a diversity of geographical areas.

Exhibit 6-21

Off-site Beneficial Uses Examined in the Risk Assessment

RECEIVING LOCATION	BENEFICIAL USE	QUANTITY OF CKD RECEIVED IN 1990 Metric Tons (Short Tons)
Farmland Ind., Coffeyville, KS	Hazardous Waste Stabilization (petroleum refining sludge)	123,000 (136,000)
VFL Technology, Malverne, PA	Landfill Cover (sewage sludge mixture)	19,000 (20,900)
NewLime, Ravena, NY	Waste Stabilization	53,000 (58,300)
	Road Construction	8,000 (8,800)
	Liming Agent	23,000 (25,300)
National N-Viro Energy Systems, Sioux City, IA	Soil Amendment (sewage sludge mixture)	6,000 (6,600)
U.S. Ash Inc., Roanoke, VA	Materials Addition (concrete admixture)	10,400 (11,440)

Information was developed on productive processes at recipient companies and on basic environmental features at locations where the dust is ultimately used. The Agency then analyzed the factors influencing CKD release, transport, and exposure potential for each category of use, considering the conditions that exist at the sample off-site locations. The purpose of this analysis was to document and describe the major factors that could influence risks from each beneficial use, and to prioritize the uses for further risk analysis through quantitative modeling.

6.3.2 Hazardous Waste Stabilization and Disposal

Farmland Industries is a petroleum refinery that uses CKD to stabilize petroleum sludges prior to land disposal. In 1990, Farmland received approximately 123,000 metric tons (136,000 tons) of CKD, accounting for roughly 17 percent of all the CKD used off-site for waste stabilization that year.

Farmland has used CKD to stabilize a variety of petroleum refining wastewater treatment sludges. The largest quantity of CKD was used as part of a project to close and renovate the refinery's oily sludge ponds in early 1990. These unlined ponds held various wastewaters and sludges, including API Separator Sludge (K051).[24] Investigations conducted at the facility in the early 1980s revealed that ground-water wells downgradient from the oily sludge ponds contained elevated levels of lead, phenols, and hexavalent chromium,[25] as well as a thick layer of oil on top of the water.[26] Therefore, before the land disposal restrictions for K051 became effective in November 1990, Farmland closed the ponds by excavating all the sludge, mixing it with CKD to stabilize it, and disposing of the mixture in a specially created landfill on top of the excavated sludge ponds. The landfill was lined and capped with a local clay.

Since this large closure project in 1990, Farmland has continued to use smaller quantities of CKD to stabilize other listed oil/water/solids separation sludges (i.e., F037 and F038). Farmland presently sends these sludges mixed with CKD off site for disposal in a Subtitle C landfill. Farmland indicates that once the land disposal restrictions for these other hazardous sludges become effective in June 1994, it will begin using a reconfigured wastewater treatment system that will eliminate the need to use CKD as a stabilizing agent.

The potential for CKD to cause or contribute to significant ground-water contamination as it is used by Farmland appears remote. The liner and cap at the landfill containing stabilized wastes from the old oily sludge ponds limit the extent to which water seeps through the wastes and percolates into the subsurface. Monitoring wells have been installed around the landfill and, according to Farmland personnel, have shown no sign of ground-water contamination thus far. Additionally, the off-site landfill where Farmland presently sends its stabilized F037 and F038 is equipped with appropriate controls required under Subtitle C to minimize the risk of ground-water contamination.

The containment provided at the on-site (oily sludge) landfill and off-site Subtitle C landfill also serves to limit the potential for CKD to significantly contaminate surface water. For example, the liner and cover used at the on-site landfill should significantly reduce the extent to which landfill contaminants can migrate to the nearby Verdigris River, either via overland run-off along with stormwater or via ground-water discharge. In addition, Farmland has constructed dikes and berms to control flooding and limit the direct flow of stormwater run-off from the site into the Verdigris River.

---

[24] *Environmental Priorities Initiative, Preliminary Assessment, Farmland Industries Site, Coffeyville, KS*, Ecology and Environment, Inc. prepared for U.S. EPA Hazardous Site Evaluation Division, October 15, 1990.

[25] *Evaluation of the Potential for Migration of Hazardous Waste Constituents from the Disposal Site to Water Supply Sources, Farmland Industries, Coffeyville, Kansas*, Engineering Enterprises, Inc., 1991.

[26] *Inspection of Ground-water Monitoring, Farmland Industries, Coffeyville, Kansas*, Draft Report, Harding Lawson Associates, 1984.

Similarly, once mixed with hazardous waste, the dust exists in an oily mixture that is not susceptible to wind erosion. This mixture is ultimately disposed in a covered landfill that effectively prohibits the potential for significant airborne emissions.

Prior to mixing CKD with hazardous waste, Farmland will accumulate a maximum of 9 metric tons (10 short tons) of the dust in an unlined, uncovered pile at the site. Although there is a potential for contaminants to migrate from this CKD pile into the environment, this potential threat appears small compared to that posed by the much larger piles kept on-site at some cement plants. Furthermore, there appears to be nothing unique about the environmental setting at the site that leads EPA to believe that the threat of releases from this small pile at Farmland is any greater than those evaluated for cement plants themselves.

Based on this case-study example, EPA believes that the use of CKD for hazardous waste stabilization does not pose a significant threat to human health or the environment. When mixed with hazardous waste, CKD is subject to full Subtitle C regulation. In fact, solidification with CKD and other similar agents has been designated as the Best Demonstrated Available Technology for the disposal of several metal-bearing wastes that exhibit a hazardous waste characteristic (55 FR 22520; June 1, 1990). Small quantities of CKD are handled and possibly released into the environment at off-site use locations before the dust is mixed with hazardous waste, but the risks associated with these releases are expected to be minimal. For these reasons, the Agency did not perform quantitative risk modeling for hazardous waste stabilization.

6.3.3 Sewage Sludge Treatment and Use

CKD is commonly used in the treatment of sewage sludge that is then used as landfill cover, fertilizer, or soil conditioner. One treatment approach, the N-Viro process, accounts for a large amount of all of the CKD used in this manner. As discussed in more detail in Chapter 8, the N-Viro process combines CKD with sewage sludge through a patented reaction to produce a "soil-like product."

To evaluate potential risks associated with the use of N-Viro soil, the Agency contacted two vendors that have licensed the process: National N-Viro Energy Systems in Sioux City, IA, and VFL Technology in Malverne, PA. National N-Viro produces and sells N-Viro soil for many uses (e.g., landfill cover, soil fertilizer). VFL, in contrast, operates a production facility at the Middlesex County Municipal Landfill in Middlesex, NJ for the exclusive purpose of producing landfill cover. The VFL plant has an N-Viro soil production capacity of 120 dry tons per day, 7 days per week. In evaluating risk potential, the Agency focused on the use of N-Viro soil as a landfill cover. Use as a soil fertilizer or conditioner is expected to pose similar, if not smaller, risks than the direct application of CKD as a liming agent (evaluated in Section 6.3.6).

The potential for contamination and adverse effects through the ground-water, surface water, and air pathways appears minor when CKD is combined with municipal sludge and used as a landfill cover. At the Middlesex landfill, for example, the landfill itself must meet basic design and operating standards for Subtitle D municipal landfills, including standards designed to limit the seepage of constituents through the landfill base.[27] Ground-water monitoring also is

---

[27] In October 1991, EPA promulgated expanded criteria in 40 CFR Parts 257 and 258 for solid waste disposal facilities regulated under Subtitle D of RCRA, including the co-disposal of sewage sludge with household wastes in municipal solid waste landfills (56 FR 50978, October 9, 1991). This rule set forth minimum federal criteria for municipal solid waste landfills like the Middlesex County Landfill, including location restrictions, facility design and

conducted, and according to VFL personnel, no ground-water contamination has been detected since the plant began operation in 1991. The Middlesex landfill also is equipped with berms and dikes to limit stormwater run-on/run-off and subsequent contamination of surface water. The greatest potential for air releases exists during transport of the raw dust to the N-Viro facility. VFL, however, reportedly transports the dust in covered trucks and transfers it directly into the plant via enclosed pipelines. Once CKD is combined with wet sludge, the dust particles are bound to the mixture and are prevented from being suspended in the air. When dried, the potential for airborne releases from the N-Viro product is limited because the fines are bound in large soil-like clumps.

Although there is some potential for the highly alkaline nature of CKD leachate to mobilize certain trace metals that exist in sewage sludge, this threat appears substantially limited by physical processes and existing regulatory and administrative controls. When added to sewage sludge, CKD raises the pH and chemically binds most heavy metals in the sludge. For example, barium, beryllium, cadmium, copper, mercury, nickel, lead, thallium, and zinc tend to be more immobile in ground water under high pH conditions than under low or neutral pH conditions; the reverse tends to be true only for arsenic, hexavalent chromium, antimony, molybdenum, and selenium.[28] In addition, EPA recently promulgated technical and permitting regulations that apply to sewage sludge beneficial use and disposal practices (40 CFR Part 503). Thus, fertilizers and soil amendments derived from CKD-sewage sludge mixtures pose minimal risk because these final products are required to be tested to assure they comply with all provisions of 40 CFR 503, which are fully protective of human health and the environment. N-Viro routinely analyzes their sewage sludge to assure compliance with concentration limits established in this "clean sludge" rule for arsenic, cadmium, chromium, copper, lead, molybdenum, mercury, nickel, selenium, and zinc. According to N-Viro personnel, this testing has not detected any exceedances of the clean sludge levels since the facility opened in 1991.

Based on this review, mixing CKD with sewage sludge for use as a municipal landfill cover does not appear to pose a threat to human health or the environment, and the Agency did not undertake more detailed risk analysis through modeling.

6.3.4 Building Materials Addition

To evaluate potential hazards of adding CKD to building materials, EPA contacted U.S. Ash, Inc. in Roanoke, VA, which purchased approximately 43 percent of all of the dust used for this purpose in 1990. U.S. Ash uses CKD to replace cement in general use concrete. Thirty percent of the cement is replaced with CKD and fly ash in equal proportions (i.e., 15 percent of the cementitious product from U.S. Ash is CKD). U.S. Ash does not purchase dust from kilns that burn hazardous waste. The dust is added in dry form to the cement, which is sold to many different customers and used in many different applications.

The possible scenarios for using CKD-containing cement are as numerous and diverse as those that exist for normal cement, and can include its use as water distribution pipelines and structural members of buildings and bridges. Therefore, it is difficult to generalize about potential exposure scenarios associated with this category of use.

---

operating criteria, ground-water monitoring requirements, corrective action requirements, financial assurance requirements, and closure and post-closure care requirements.

[28] Based on soil-water partition coefficients (K_d's) in EPA's Corrective Action chemical database.

One generalization that may be possible, however, is that dust or leachate from CKD-containing cement is unlikely to be significantly different in composition than that from normal cement. This is based partly on the fact that CKD is mixed with cement in only small proportions. Side-by-side leach test data for trace metals published by PCA also suggest that the composition of leachate from cement and CKD are similar.[29] Although these PCA data indicate that the concentrations of relatively volatile metals (mercury, selenium, thallium, cadmium, and lead) may be 13 to 40 times higher in CKD leachate than cement leachate, TCLP tests of both materials yielded metal concentrations that were non-detectable and/or below TC regulatory levels in virtually all cases. Perhaps more relevant results are provided by an independent study[30] that found that metals concentrations in leachate from concrete products were below detectable limits for all metals tested with the exception of chromium, which was measured at 72 ppb, well below the chromium MCL and TC regulatory level. These results indicate that metals, once bound into the cementitious matrix, are unlikely to leach from cement in appreciable quantities and probably do not pose a risk via waterborne pathways.

Similarly, once CKD is locked into concrete, the potential for airborne releases appears low. A potential for air releases does exist during materials handling prior to forming of the concrete, analogous to those observed at the cement production facilities. A potential for fugitive dusting from concrete also exists during use and when the concrete is cut apart or broken up, either in construction or demolition projects. Such releases, however, would be temporary and the amount of dust emitted to the air is likely to be small compared to that emitted from the large, uncovered CKD piles at cement plants.

For these reasons, EPA believes that the use of CKD as an additive in building materials is not likely to result in significant incremental releases of contaminants to the environment. Additional modeling to quantify risks from this type of use was not conducted.

6.3.5 Road Construction

General evaluation of risk factors suggests that use of CKD in road construction could present a potential threat greater than the other uses discussed above. To evaluate this threat in greater detail, the Agency performed quantitative modeling of a road construction scenario.

Analysis of Risk Factors

NewLime in upstate New York distributed almost 8,200 metric tons (9,000 short tons) of the CKD used in road construction, or approximately 76 percent of all CKD used for this purpose in 1990. Based on telephone interviews with NewLime personnel, CKD can be used in three different ways for road construction: as a road sub-base, mixed with asphalt that is used for the road surface, and in the construction of unpaved roads and parking lots. The potential for releases into the environment varies with these different types of uses.

The potential for releases appears small when the dust is used as a road sub-base. In these situations, the dust is usually mixed with gravel and fly ash. Because CKD and fly ash are

---

[29] Portland Cement Association, 1992. *An Analysis of Selected Trace Metals in Cement and Kiln Dust.* Skokie, IL.

[30] Kriech, Anthony J., *Leachability of Asphalt and Concrete Pavements*, Heritage Research Group, March 1992.

pozzolanic,[31] the sub-base sets up to form a solid layer that binds the CKD constituents in place. Leaching and migration from the sub-base also is expected to be limited by little to no direct contact with water, as the sub-base is overlain by relatively impermeable asphalt or concrete. The primary occasions when water may flow under the road and leach CKD contaminants are likely to be associated with freeze/thaw conditions. In addition, there appears to be little potential for windblown dusting, except during the actual application of CKD as a sub-base and the brief period that it is uncovered.

When used as an additive to asphalt, dust in the asphalt could be submerged during rainfall. In principle, CKD constituents could leach from the asphalt mixture and migrate to ground water or flow overland to surface waters. However, a study by the Heritage Research Group[32] shows that metals normally present in asphalt do not tend to leach in appreciable concentrations during TCLP tests. For almost every metal tested, concentrations in asphalt leachate were below detectable limits. The only exception was chromium, which was detected in asphalt leachate at a level of 0.10 ppm, 50 times below its TC regulatory level. It is not known how CKD affects the leachability of asphalt, if at all. However, the generally low concentrations of chemicals observed in CKD leach tests and the relatively small proportion (five percent or less) of CKD that is mixed with asphalt suggest that asphalt mixed with CKD would produce leachates very similar to asphalt by itself. The potential for airborne releases when CKD is used in asphalt also appears low because the dust is locked into a matrix through a pozzolanic (hardening) reaction. The presence of small proportions of CKD is not expected to significantly affect the quantity and quality of particulates that are suspended from the asphalt during road use.

A greater potential for CKD contaminants to migrate into the environment appears to exist when the dust is mixed with clayey soils to form unpaved roads or parking lots. In these cases, the dust may be applied in an indiscriminate manner that is not designed to optimize a pozzolanic reaction. Moreover, the dust is not covered by a hardened road surface like asphalt or concrete, and engineered controls are not used to prevent CKD contaminants exposed to the elements from leaching into the subsurface or migrating to any nearby fields or surface waters along with storm water run-off. CKD also could be blown into the air by the wind, and vehicular traffic both during and after construction could periodically and temporarily suspend particulate matter into the air. The primary factors that would influence the amount of CKD suspended in the air include the particle size of the material on the road surface, traffic volumes, the speeds and other characteristics of vehicles (e.g., number of wheels and weights), and rainfall patterns.

Based on this evaluation, there does not appear to be a significant human health or environmental risk associated with the use of CKD as either a road sub-base or an additive to asphalt. However, since there appears to be a greater potential for releases of CKD contaminants and subsequent exposures when the dust is used in the construction of unpaved roads or parking lots, these risks were studied in greater detail through quantitative modeling.

---

[31] That is, finely divided siliceous or siliceous and aluminous material that reacts chemically with slaked lime at ordinary temperature and in the presence of moisture to form a strong, slow-hardening cement.

[32] Kriech, Anthony J., *Evaluation of Hot Mix Asphalt for Leachability*, Heritage Research Group, October 1992.

Risk Modeling Results for Unpaved Traffic Surfaces

The Agency employed the same basic modeling methodology for quantifying the risks from off-site use of CKD for unpaved roads and parking lots as was used in the on-site analysis (Section 6.2.2). The primary difference relates to the design of the road paving scenario. Because such uses may take place in virtually any location in the U.S., this risk scenario is largely hypothetical and was developed using best professional judgment. Thus, the results from this analysis should be considered rough indications of the kinds of risks that might correspond to this CKD management approach.

The Agency simulated direct addition of CKD to the other materials (clayey soils and aggregate) used in the construction of an hypothetical off-site parking lot. Because MMSOILS requires a square source term, it cannot effectively simulate releases from a long thin source such as would be required to simulate a road. Accordingly, the analysis was limited to the use of CKD in unpaved parking lots. The release modeling for unpaved parking lots considered three of the four pathways evaluated in the on-site modeling: ground water, air, and surface water. Only one exposure pathway in the foodchain pathway was evaluated: ingestion of fish in a nearby stream.

Based on this modeling, the estimated risks associated with use of CKD as a surface for unpaved parking lots were generally quite low. None of the pathways examined were found to have cancer risks exceeding the 10^{-6} risk range or noncancer effects exceeding the threshold dose.

The highest risks were in the foodchain pathway (for ingestion of fish in the nearby stream receiving run-off from the parking lot). The only foodchain pathway effect evaluated for unpaved parking lots corresponds to the ingestion of fish caught recreationally in the nearby stream. The increased individual cancer risk associated with recreational fishing was estimated to be about $1x10^{-7}$, due to exposures to 2,3,7,8-TCDD. Noncancer effects were about two orders of magnitude below the effects threshold, with thallium representing the highest intake to reference dose ratio.

The maximum ground-water risks from the unpaved parking lot were estimated at $5.3x10^{-9}$, which were driven by potassium-40. The noncancer effect was nearly seven orders of magnitude below the effect threshold. The low ground-water effects resulted from the low permeability of the unpaved surface (resulting in minimal leachate generation) combined with the relatively low concentrations of the CKD constituents in the leachate generated by the parking lot material.

The increased individual cancer risks through exposure to air emissions were estimated to be $1.4x10^{-11}$ to the individual living closest to the parking lot. Noncancer effects were negligible and could not be quantified. These low air risks reflect the small size of the unpaved parking lot, which is unlikely to serve as a large enough source to result in elevated ambient concentrations of CKD constituents in the air.

The estimated maximum risk resulting from dermal absorption and incidental ingestion of water while swimming was 2.4×10^{-9}, and was due primarily to arsenic. Noncancer effects were estimated to be about five orders of magnitude below the health effects threshold.

6.3.6 Agricultural Liming

Because of the potential for bioaccumulation and the direct ingestion of contaminated food products, CKD used as a liming agent appears, on first evaluation, to pose more of a potential risk than any other CKD use. To further explore this risk potential, EPA performed quantitative modeling of an agricultural liming scenario.

Analysis of Risk Factors

Like agricultural lime, CKD is alkaline and contains a number of essential plant nutrients. According to the 1991 PCA Survey and the RCRA §3007 responses, approximately 53,000 metric tons (58,000 tons) of dust were sold or given away in 1990 for liming from five cement plants (one plant each in New York, Pennsylvania, and Kansas, and two in Idaho). To evaluate this application, the Agency contacted the NewLime Company in upstate New York. NewLime distributes dust to over 1,600 farmers and accounted for approximately 46 percent of the total dust used for liming in 1990.

NewLime is the exclusive CKD agent for Blue Circle Cement in Ravena, NY. The dust is transported from Blue Circle to storage silos at NewLime via enclosed trucks. CKD in storage at NewLime is subsequently transported from the silos to specific points of application via bulk tanker trucks. The dust is not modified in any way prior to application. The typical point of application is a 41-hectare (100-acre) farm that grows alfalfa, corn, and soybeans for livestock feed. Alfalfa and corn account for about 90 percent of the crop output. Approximately half of the CKD from NewLime is applied in New York.

Liming may occur during any season of the year with the majority occurring in the fall. Once the dust arrives at a farm, it is placed in spreader boxes of spreader trucks. These boxes commonly hold up to 11 metric tons of CKD and measure approximately 10 meters (33 feet) in width. Two and a half centimeter (1-inch) diameter holes on the bottom of the spreader boxes are spaced every 10 centimeters, which enables CKD to be applied evenly to the fields. CKD is applied in four steps. The farmer first disks the soil and harrows the ground; CKD is then spread; the soil is disked again; and the farmer plows a final time. CKD is usually tilled to a depth of 15 to 20 centimeters. Typically, 4.5 metric tons of CKD are spread per hectare with CKD application occurring once every three to five years. This is the same as the application rate for regular lime.

A paucity of available data on the composition of agricultural lime prevents a complete comparison of CKD and lime in terms of trace contaminant concentrations. However, a preliminary analysis suggests that, compared to CKD, agricultural lime can contain higher totals concentrations of some constituents (such as barium), about equal concentrations of some constituents (such as chromium), and lower concentrations of other constituents (including lead, nickel, silver, vanadium, and copper).[33] Agricultural lime would not be expected to contain dioxins because it is simply crushed limestone, and not, like CKD, manufactured in a combustion process along with chlorine precursors that might yield dioxins.

The potential for ground-water contamination from liming is a function of the amount of CKD applied, dust leachability, and the particular environmental conditions that exist at a farm

---

[33] Boynton, Robert S., *Chemistry and Technology of Lime and Limestone*, Second Edition, John Wiley & Sons, Inc., New York, Chichester, Brisbane, and Toronto.

(e.g., rainfall and recharge rates, soil chemistry and permeability, and depth to ground water). As noted above, the dust is applied infrequently in small amounts, just like regular lime. No data are available, however, to compare contaminant concentrations in leachate from regular lime to those measured in CKD leachate extracts. The environmental conditions where the CKD is applied may vary widely because CKD liming takes place not only throughout upstate New York, but also in a few other locations in the United States. At some sites, these conditions may be conducive to ground-water contamination, such as when net recharge rates are high, soils are permeable, and ground water is shallow. Furthermore, because ground water in rural areas around farms is often used for drinking and other purposes, any ground-water contamination associated with the use of CKD as a liming agent may have the potential to result in human exposures.

Similarly, there is a potential for this use of CKD to result in surface water contamination. The only measures that may exist to prevent CKD contaminants from migrating into surface waters are likely to be occasional irrigation ditches and agricultural management techniques designed to preserve topsoil, such as terracing. Vegetation may slow run-off to surface waters during the growing season, but when CKD is applied initially, little or no vegetation exists. Even during the growing season, much bare soil is exposed to the elements in fields with row crops. Factors such as CKD application rates, CKD properties (e.g., chemical composition and leachability), annual rainfall, the slope of the land, the nature of on-site soils, the extent of crop cover, and the distance to surface waters will all contribute to the potential for surface water contamination.

In general, when properly handled, the potential for release to air when CKD is used as a liming agent appears smaller than the potential for release to ground water and surface water. In the specific example of NewLime, the dust is covered and contained during all phases of storage and transport prior to the time it is applied to a field. In particular, CKD is transported in enclosed trucks to the NewLime storage facility, where it is then stored in enclosed silos. The dust is then transported from NewLime to individual farms in enclosed tanker trucks where it is placed in enclosed spreader boxes. The dust is dropped only centimeters above the ground and quickly tilled into the soil; it is not broadcast in the air and then allowed to settle onto the ground. In the Agency's telephone interview, NewLime personnel indicated that little dust becomes airborne even on windy days.

The greatest potential for contaminant exposures resulting from the use of CKD as a liming agent is through the foodchain. Crops cultivated in fields limed with CKD by NewLime are used as feed for livestock. CKD constituents, therefore, may be ingested directly by animals and concentrated in food products (milk, meat) that are ingested by humans.

Risk Modeling Results for Liming

The Agency conducted a quantitative analysis to estimate the potential magnitude of risks resulting from the agricultural use of CKD. As in the unpaved road analysis, the modeling methodology for the agricultural applications of CKD was based largely on the approach used in analyzing on-site risks. The primary differences concern the focus on the two foodchain exposure pathways relevant to agricultural applications: vegetables, and beef and milk. Because the CKD is assumed to be tilled directly into the soil, this analysis did not quantify potential impacts to surface water, air, or fish ingestion, as it is assumed that these results would be significantly lower than risks from the ingestion of agricultural products. Another difference from the on-site modeling analysis included the simulation of three basic risk scenarios: best

estimate, high end, and upper bound. The best estimate analysis assumed the best estimate CKD application rate and CKD concentrations representing CDD/CDF values from a facility that has been documented as selling CKD for use as a liming agent, and 50th percentile values for the metals and radionuclides from the Agency's database on CKD concentrations. The high end analysis used a high end CKD application rate and CKD concentrations corresponding to the highest risk potential wastestream from the five baseline facilities. Finally, the upper bound value used the high end application rate, and CKD concentrations from the facility with the highest measured CDD/CDF concentrations from the Agency's sampling and analysis program.

The Agency simulated direct incorporation of CKD on a hypothetical agricultural field assumed to grow corn or alfalfa for use as cattle feed. The field used in the simulation represented a typical 41-hectare (100-acre) field. The analysis employed an assumed CKD loading rate of 4.5 metric tons per hectare (2 tons per acre) every four years in the best estimate and the same loading every two years in the high end and upper bound analyses.

The best estimate results for the liming agent analysis showed the following for the three foodchain exposure scenarios examined. The highest best estimate risks were in the subsistence farmer scenario, reaching a maximum cancer risk of $7x10^{-6}$ for arsenic, with the next highest risk resulting from beryllium exposures (at $4.7x10^{-7}$). Ingestion of vegetables (non-subsistence) resulted in a risk of $8.4x10^{-7}$ for arsenic, while the ingestion of beef and milk resulted in a risk of $1.1x10^{-7}$.

The high end results (more frequent every two year application of CKD with higher constituent concentrations) exceeded those in the best estimate by one to two orders of magnitude. The subsistence farming scenario had the highest total cancer risks of $2.5x10^{-5}$, resulting equally from exposures to arsenic and 2,3,7,8-TCDD equivalents. The risks for ingestion of vegetables were $1.7x10^{-6}$ (due to arsenic), while the risks from beef and milk ingestion were $1x10^{-6}$ due to 2,3,7,8-TCDD equivalents and arsenic.

The upper bound scenario simulated the tilling of CKD with EPA's highest measured CDD/CDF concentrations in the field. This scenario produced the highest risk estimates, with a maximum risk of $2.1x10^{-4}$ for the subsistence farming scenario (due primarily to 2,3,7,8-TCDD equivalents), a cancer risk of $1.7x10^{-5}$ for beef and milk ingestion (dominated by 2,3,7,8-TCDD), and a cancer risk of $1.1x10^{-5}$ for the ingestion of vegetables (resulting from 2,3,7,8-TCDD, arsenic, and beryllium).

None of the noncarcinogens exceeded the effects threshold in the liming agent analysis, although several constituents resulted in hazards within one order of magnitude of the threshold (i.e., a hazard ratio between 0.1 and 1.0): antimony (high end subsistence farming only), cadmium (all subsistence farming scenarios and high end vegetables), and thallium (subsistence farming and beef and milk ingestion).

6.3.7 Summary of Risks from Off-site Beneficial Uses

By far, the most common off-site use of CKD is for waste stabilization, both for hazardous and non-hazardous waste prior to disposal and non-hazardous waste (municipal sewage sludge) prior to beneficial use. Based on an evaluation of the conditions that exist at sample off-site locations where CKD is used, EPA believes that these uses do not pose a significant threat to human health or the environment. Hazardous waste stabilization presents a low risk because CKD mixed with hazardous waste is subject to full Subtitle C regulation,

including requirements for disposal in lined units to prevent ground-water contamination, appropriate run-on and run-off controls to prevent surface water contamination, and capping of landfills upon closure to prevent air releases. Releases to various media are further minimized because CKD is generally mixed with sludges to form a stabilized solid that is less susceptible to dispersion (e.g., via wind erosion) than CKD by itself. For non-hazardous waste stabilization, the risks are also expected to be small because at least half of the CKD used in this manner in 1990 was used in the N-Viro process, which combines CKD with sewage sludge. Similar to Subtitle C regulations for hazardous wastes, sewage sludge disposal is controlled by recently promulgated permitting regulations (40 CFR Part 503). These regulations set forth concentration limits for metals in sludge before disposal. Compliance monitoring of stabilized sludge at a sample off-site use location indicates that no exceedances of clean sludge levels have occurred.

Three other off-site uses — road sub-base, additive to asphalt, and materials addition — also do not pose significant risks. When used for these purposes, CKD is mixed with other materials, such as asphalt or cement, to form a solid matrix. In this form, it is unlikely that the CKD will contaminate environmental media because: (1) the CKD makes up only a small fraction of the total solid matrix (e.g., less than five percent in the case of asphalt mixtures); and (2) the solid matrix is generally not susceptible to significant releases to ground water, surface water, or air.

Preliminary evaluation identified two types of uses that could have a greater potential to pose risk to human health and the environment: agricultural liming and construction of unpaved roads and parking lots. The primary risk conclusions for these off-site uses are as follows:

- For agricultural liming, releases to ground water and surface water are possible due to leaching and surface run-off. Air releases are not expected to be significant because the dust is covered and contained at all times during transport and delivery, dropped only centimeters from the ground during application, and is quickly tilled below the surface. EPA's modeling predicted potential risks via the foodchain pathway for this practice for ingestion of vegetables from the field, beef and milk raised on feed from the field, and most significantly, for a farmer subsisting on both vegetables, beef, and milk raised from the field. The best estimate cancer risks reached a maximum of $7x10^{-6}$, while the maximum high end risks were $2.5x10^{-5}$. In the bounding analysis, the subsistence farming scenario showed the greatest risk potential with a risk estimate of $2.1x10^{-4}$.

- For use in unpaved roads and parking lots, releases to ground water, surface water, and air could occur because the CKD is not fixed in a solid matrix, but is slightly compacted, exposed to the elements, and disturbed by vehicular traffic. However, the Agency's modeling predicted very low risks (less than $5x10^{-9}$) for the ground-water, air, and surface water pathways, and only $1x10^{-7}$ for the worst-case scenario of fish ingestion in the adjacent surface water body. Noncancer risks were found to be below the combined effects threshold for all pathways evaluated.

CHAPTER SEVEN

EXISTING REGULATORY CONTROLS ON CKD MANAGEMENT

7.0 INTRODUCTION AND METHODS

7.0.1 Objectives

EPA's objective in this analysis was to identify and evaluate the existing regulatory controls that pertain to management of CKD. The Agency carried out this analysis in accordance with the spirit of RCRA Section 8002(o), which suggests that EPA "review studies and other actions of other Federal and State agencies . . . with a view toward avoiding duplication of effort." The regulatory analysis also served more generally to help characterize current waste management practices. This knowledge will guide the development of the Agency's position on any additional CKD management regulations that EPA may deem appropriate.

7.0.2 Methodology

EPA has addressed federal, state, and local regulations, based on the environmental media that they were established to protect. Therefore, the Agency examined those regulations that protect air quality and surface and ground water. In examining existing management controls on CKD, the Agency evaluated both the strengths and areas needing improvement for the present regulatory framework. EPA also evaluated cross media impacts created by regulation; one example of such an impact is the effect that air pollution control devices, installed to remove dust from cement plant exhaust gases, had on the prevalence of collecting, landfilling, and storing CKD.

In the initial phase of the analysis, EPA examined the relevant statutes and regulations pertaining to air quality, water quality, and solid waste as they might apply to the management of CKD. To develop a baseline of information about current federal and state regulations, EPA conducted an on-line search of the Computer-Aided Environmental Legislative Data System (CELDS), a data base containing abstracts of federal and state environmental regulations. By querying CELDS with various combinations of key words, such as "cement plants," "dust," and "fugitive emissions," the Agency obtained abstracts of federal and state environmental regulations that might affect on-the-ground management of CKD.

EPA identified and evaluated the existing federal regulatory controls on CKD, focusing on programs and requirements established by EPA. This characterization is necessary for two reasons. First, some states do not have EPA-approved programs for regulating air pollution emissions to the atmosphere or discharging contaminants to surface waters. In those states, federal EPA regulations take precedence. Second, the federal government has not delegated authority to the states for implementing some environmental protection statutes and regulations and is thus responsible for their implementation. EPA contacted EPA Regional staff in those states that do not have federally approved programs for implementing the major environmental statutes (e.g., RCRA, The Clean Water Act [CWA]), and performed a detailed regulatory analysis of the implementation of existing federal statutes and regulations that pertain to the management of CKD.

The next step of EPA's analysis was to perform a more detailed review of statutes and regulations in four selected states. Based on time and resources, EPA limited this review to four of the states with the largest clinker production and finished grinding capacities. Together, California, Michigan, Pennsylvania, and Texas represent over 35 percent of 1990 clinker production capacity. EPA assumed that these states would have the most extensive experience in controlling the management of CKD and would have the greatest interest in regulating CKD.

Based on the state statutory and regulatory language, EPA discovered that the scope of state programs in these four states was not always clear. Therefore, EPA contacted state and local officials involved with implementing CKD management requirements to learn how those statutes and regulations are interpreted in practice, and to obtain facility-specific implementation information. The information compiled from these contacts was combined with the existing information on statutory and regulatory requirements to produce the final implementation analysis.

7.0.3 Summary of Findings

The control of stack emissions at cement plants during the last 30 years may have prompted an increase in landfilling and stockpiling of CKD as air pollution control devices removed non-useable dust from kiln exhaust gases.[1] Prior to regulation of air pollutant emissions, CKD was released into the atmosphere from stack and fugitive emissions with little or no control. More recently, air pollution control has been expanded to regulate fugitive dust emissions from non-stack sources (e.g., storage piles and transportation equipment).

As cement plant stack and fugitive emissions have been increasingly regulated, the generation and long-term management and disposal of CKD have become solid waste management issues. States have become concerned about contamination of surface and ground water from improper management of solid wastes. This growing concern has manifested itself in closer solid waste regulatory control of CKD at the state level. More stringent solid waste requirements for landfilling and stockpiling may in turn be a factor in the rise of CKD recycling and beneficial use.

On the federal level, air quality has been improved through implementation of controls on releases of CKD through kiln stacks and via fugitive dust emissions. Under the New Source Performance Standards (NSPS) for cement plants, a facility must comply with specific emission limitations for particulate matter. Prevention of Significant Deterioration (PSD) review also is required for a cement plant located in a geographic area that is classified as an attainment area. In addition, cement plants are subject to Nonattainment Review if they are located in an air quality control area that is not in compliance with the National Ambient Air Quality Standards (NAAQS) for a given pollutant (e.g., particulate matter or sulfur dioxide). Cement kilns that burn hazardous waste fuels also are being controlled under new regulations for the Burning of Hazardous Waste in Boilers and Industrial Furnaces (BIF), which imposed new controls on those facilities.

At the state level, air quality requirements for CKD management incorporate the federal standards as a baseline but many states have established additional, more stringent requirements. Individual states subject cement plants to visible emission or opacity limitations that are more

---

[1] Personal communication with Gary Linns, Pennsylvania Department of Environmental Resources, Bureau of Air Quality, October 9, 1992.

stringent than the federal standards; for example, Pennsylvania requires opacity to be measured over a three-minute period rather than the six-minute period in the federal standard. Texas also requires notification of "excessive emissions" and establishes particulate matter ground level concentration limits. Michigan and Pennsylvania have established fugitive dust control programs; Pennsylvania has actually required two cement plants to store CKD and clinker in a warehouse or silo to control fugitive emissions. California, Michigan, Pennsylvania, and Texas all require permits to construct and operate cement plants. In all states, the permit review process is designed to ensure that emissions from such sources will not interfere with the attainment and maintenance of ambient air quality standards.

Similarly, treatment of wastewater and stormwater run-off from cement plants has been beneficial in maintaining and improving water quality. National Pollutant Discharge Elimination System (NPDES) permits establish effluent limits on suspended solids, pH, toxic pollutants such as heavy metals, and material run-off from CKD storage piles. Monitoring and reporting requirements assure compliance with the applicable effluent limitations, water quality standards, and pretreatment standards. In addition to controls on process wastewater from cement plants, stormwater run-off is also regulated. Under new federal stormwater regulations, pollution prevention plans and Best Management Practices (BMPs) should continue to reduce the amount of uncontrolled CKD contained in stormwater discharges.

In states where responsibility for implementation of the NPDES program to regulate discharges to surface water has been delegated, such as California, Michigan, and Pennsylvania, only one state water permit regulating the discharge of pollutants is required. In Texas, where delegation of authority has not occurred, both federal and state permits must be obtained. Cement plants in any of the states generally are subject to State Pollutant Discharge Elimination System and pretreatment regulations that are either identical or similar to the federal requirements. Each of the four states has adopted both descriptive (e.g., all waters should support agricultural use) and numeric surface water quality standards.

In addition, state regulation of discharges has been expanded beyond the scope of the NPDES to include discharges to ground water. Ground-water protection requirements include facility siting restrictions, design standards, ground-water monitoring, and the designation of wellhead protection areas. Michigan has established ground-water quality regulations. Similarly, Pennsylvania's Pollutant Discharge Elimination System program applies both to streams and ground water. California's ground-water protection policy includes closely regulating a number of potential sources of ground-water degradation, such as waste management facilities.

In implementing the federal stormwater requirements, each state has established different permit issuance policies. California has decided not to issue permits specific to industrial categories, but has established a general permit that applies to all stormwater dischargers. Cement plants in Pennsylvania and Texas, where delegation has not occurred, will be subject to a general permit program that is industry-specific. In Michigan, on the other hand, individual cement plants or groups of plants must apply for stormwater permits.

While CKD is temporarily excluded from regulation under Subtitle C of RCRA, CKD is still subject to regulation as a non-hazardous solid waste under RCRA Subtitle D. In the area of solid waste management, CKD is landfilled or stored in piles on site at many cement plants. Under Subtitle D, flexibility exists for states to implement requirements for industrial non-hazardous waste and this flexibility results in a diverse collection of state Subtitle D programs. Enforcement of Subtitle D is primarily a state's responsibility. The federal government, however,

has the authority and resources under the Comprehensive Environmental Response, Compensation, and Liability Act (CERCLA, or Superfund) to respond to situations in which CKD is or may be released into the environment such that it poses an imminent and substantial danger to human health and the environment. Two cement kiln facilities are currently on the National Priorities List (NPL) in response to CKD-related environmental damage.

Because the Bevill Amendment does not preclude more stringent (e.g., hazardous waste) requirements for CKD at the state level, states (such as California) are free to characterize CKD as a hazardous waste; indeed, several differences in CKD management requirements exist between the states. However, California does not enforce the management of CKD as a hazardous waste because of recent legislation imposing a one year moratorium on enforcement of these requirements pending a study of CKD (See Section 7.3, subsection 7.3.2 for further discussion). Pennsylvania, on the other hand, classifies CKD as a residual waste, regulating CKD less stringently than if it was considered a hazardous waste, but still requiring comprehensive waste management practices. Michigan and Texas characterize CKD as an industrial, non-hazardous solid waste and, therefore, subject CKD to fewer management requirements than either California or Pennsylvania. Pennsylvania and Michigan also require beneficial use approvals for CKD. This approval is required if a cement facility plans to reuse CKD for a particular beneficial purpose, such as to make fertilizer or to use CKD as a soil stabilizer.

State solid waste management requirements for CKD control appear to be in transition because of a trend toward creation of new state industrial solid waste programs and expansion of existing programs. Concerns about ground-water protection and the desire to examine the effects of burning hazardous waste as a fuel supplement also support this trend. Pennsylvania is an example of a state in which new regulations on residual waste management apply more stringent requirements to all industrial solid waste, including CKD. Texas has new waste classification requirements and will be proposing new boiler and industrial furnace regulations in the near future. California has imposed a moratorium on enforcement of regulations that affect CKD pending further evaluation. In contrast, Michigan appears to be reviewing CKD management practices as well as examining with interest other states' programs for examples of effective innovations.

7.0.4 Limitations of the Analysis

This regulatory analysis must be interpreted with care, as the scope of the state regulatory review was limited. Time and resource constraints precluded a detailed analysis of all of the states that contain cement plants. In addition, EPA found that the scope of state programs was not always clear from the state statutory and regulatory language reviewed. As a result, EPA contacted state and local officials to interpret legal requirements. State and local regulatory officials, while helpful, sometimes had differing interpretations of requirements.

The ability to draw conclusions concerning the relative performance of waste management controls among states is limited by variations in requirements and recordkeeping among the states. Recordkeeping varies significantly among states; where states have pertinent records, information on implementation may be readily available. Also, as this study was limited to four states, the analysis may not be completely representative of CKD management controls throughout the country.

Most often, because CKD waste is not regulated under Subtitle C of RCRA, states do not specifically regulate the management of this waste at cement manufacturing facilities.

Similarly, enforcement and monitoring records are incomplete and/or distributed throughout regional offices within a state, making the effectiveness of existing CKD management controls more difficult to evaluate.

7.1 AIR

7.1.1 Federal Controls

Clean Air Act

The federal Clean Air Act requires EPA to establish the maximum ground level concentrations of pollutants in the ambient air that protect public health and the environment.[2] Currently, national ambient air quality standards (NAAQS) exist for sulfur dioxide (SO_2), particulate matter smaller than 10 microns in size (PM_{10}), carbon monoxide (CO), ozone (O_3), nitrogen oxides (NO_x), and lead (Pb).[3] The NAAQS for particulate matter is the standard having the most effect in controlling the release of CKD to the atmosphere through kiln stack or fugitive dust emissions. The standard for particulate matter was changed in 1987 from one measuring total suspended particulate (TSP) to one measuring particulate matter ten microns in diameter or smaller (PM_{10}).[4] PM_{10} emission limitations apply not only to kiln dust, but also to particulates from grinding and milling processes, coal dust, and quarry dust.

The NAAQS establish ceilings for individual pollutant concentrations and require the development and implementation of emission limitations pursuant to other sections of the Clean Air Act. Therefore, NAAQS determine the degree of control that will be imposed on existing sources and the restrictions on location of new sources, depending on whether air quality is better or worse than the NAAQS in the particular area where a source is or will be located. Regulatory agencies enforce the emission limitations to comply with the NAAQS. Various implementing regulations and air pollution control programs are described below.

Implementing Regulations

State Implementation Plans

The state implementation plan (SIP) under Section 110 of the Clean Air Act[5] is the primary regulatory mechanism by which emission controls are imposed by the states on stationary sources in order to meet NAAQS. EPA's approval of a state plan makes its provisions enforceable by the federal government, the state, and by citizen suit. All the states have SIPs, but the 1990 Amendments to the Clean Air Act require many changes in current SIPs, as delineated below.

---

[2] 42 U.S.C. §§ 7401-7671q.

[3] 40 CFR Part 50.

[4] Fine particles pose a greater hazard to human health as they can pass through the body's natural defenses and penetrate deep into the lungs.

[5] 42 U.S.C. § 7410.

In particular, Section 110(a)(2) of the Clean Air Act has been amended to require that an acceptable SIP contain detailed provisions addressing the following topics:

- Emission limitations and control measures;
- Monitoring requirements;
- Review of new and modified sources for compliance with new source performance standards (NSPS), prevention of significant deterioration (PSD), and nonattainment;
- A demonstration of adequate legal authority to operate and enforce the program;
- Emergency authority similar to that granted EPA under Section 303 of the Clean Air Act; and
- A permit program.

New Source Performance Standards

EPA established NSPS for portland cement plants in 40 CFR 60 Subpart F. These performance standards apply to plants that were constructed or modified after August 17, 1971.[6] Components of cement plants (referred to as "facilities") specifically affected are kilns, clinker coolers, raw mill systems, finish mill systems, raw mill dryers, raw material storage facilities, clinker storage facilities, finished product storage facilities, conveyor transfer points, and bagging and bulk-loading and unloading systems. For these plants, EPA establishes performance standards that reflect the emission limitations achievable through application of the best available pollution control technology. The performance standards consider other environmental (e.g., increased water pollution in exchange for reduced air pollution) and energy impacts.[7]

In accordance with the NSPS, no portland cement plant owner or operator may exceed the particulate matter emission limits. Owners or operators must monitor each stack using a continuous opacity monitoring system or a certified visible emissions observer. In all cases, each owner or operator must submit semi-annual reports of excess emissions (defined as all 6-minute periods during which the average opacity exceeds the standard) and of equipment malfunctions. The emission standards for these facilities are shown in Exhibit 7-1. In addition, owners or operators must record daily production rates and kiln feed rates and conduct monitoring activities.

Prevention of Significant Deterioration

The goal of the PSD program is to avoid deterioration of air quality in attainment ("clean air") areas by maintaining pollutant emissions levels such that ambient air quality remains below the NAAQS. For example, Oakland County, Michigan, is an attainment area for particulate

---

[6] A "modification" is any physical or operational change of an existing facility that increases the emission of any air pollutant.

[7] 42 U.S.C. § 7411.

matter, SO_2, NO_x, and lead; thus, the PSD program seeks to limit emission levels of these pollutants so that ambient concentrations remain within their respective NAAQS.

Exhibit 7-1

New Source Performance Standards for Portland Cement Plants

Affected Facility	New Source Performance Standards	
	Particulate Matter (kg/mt)*	Opacity (percent)
Kiln	0.15	20
Clinker Cooler	0.05	10
All Other Affected Facilities	--	10

* Particulate matter is measured in terms of kilograms of particulate matter per metric ton of feed (dry basis) to the kiln.

Section 165 of the Clean Air Act requires a PSD permit prior to construction or modification of a source in an attainment area. To obtain a PSD permit, a source must demonstrate that it will use Best Available Control Technology (BACT), to reduce emissions for each pollutant subject to regulation under the Clean Air Act. Section 169(3) defines BACT as air pollution controls that achieve the

> maximum degree of [emission] reduction . . . which the permitting authority, on a case-by-case basis, taking into account energy, environmental, and economic impacts and other costs, determines is achievable for such facility . . . .

BACT limitations must be at least as stringent as those limitations required by applicable NSPS. The BACT provision gives EPA or the authorized state the ability to tighten emission control technology requirements by incorporating state-of-the-art control technology developments.

Nonattainment Review

Whereas PSD review applies where a new or modified emission source is to be located in an attainment area, Nonattainment Review applies where an air quality control area is in nonattainment of the NAAQS. State implementation plans must require that permits be obtained for the construction or modification of major stationary sources in a nonattainment area.

Nonattainment status typically means that more stringent emission limitations will be necessary for the source than if it were being built in an attainment area. In addition, the stationary source must obtain an emission offset, which is a reduction in emissions of the nonattainment pollutant by an existing source (or sources) in the same area. Regulations establish offsets on the basis of total emission discharges. The offsets must be somewhat greater than the potential emissions of the new or modified source to produce a net air quality benefit or "reasonable further progress" toward compliance with the NAAQS.

Hazardous Air Pollutants

The 1990 Clean Air Act Amendments completely revised Section 112 of the Clean Air Act that had provided for national emission standards for hazardous air pollutants (NESHAPs). The revised Section 112(b)(1) establishes a program to regulate emissions of 189 toxic air

pollutants through technology-based standards.[8] EPA will not establish control requirements directly on a substance-by-substance basis. Instead, EPA identified categories of industrial facilities, including Portland Cement plants, that emit substantial quantities of each air toxic.[9]

NESHAPs apply to facilities that emit or have the potential to emit 10 tons or more of any single hazardous air pollutant in a year. Alternatively, a facility that emits or has the potential to emit more than 25 tons per year of any combination of hazardous air pollutants would also be subject to NESHAPs. In setting standards, EPA is allowed to distinguish between new and existing facilities, and to set less stringent technology-based standards for existing facilities. The standards can compel a wide range of control measures, including not only the installation of control equipment but also process changes or the substitution of materials. Within eight years of establishing a NESHAPs for a source category, EPA must provide for a second phase of regulatory controls aimed at protecting public health with "an ample margin of safety."[10] If necessary, additional health-based standards will be required.

EPA is currently developing NESHAPs for Portland Cement plants that will address stack emissions and fugitive emissions. Hazardous air pollutant emissions from CKD storage piles will be considered for regulation. It is uncertain how, or if, CKD storage piles will be regulated. The NESHAPs for Portland Cement plants are scheduled to be promulgated no later than November 1997.

Boiler and Industrial Furnace Regulations

On February 21, 1991, EPA finalized regulations that expanded controls on the burning of hazardous waste in boilers and industrial furnaces.[11] The boiler and industrial furnace (BIF) regulations require owners and operators of boilers and industrial furnaces burning hazardous waste to limit the emissions of toxic metals, carbon monoxide, hydrogen chloride, chlorine gas, and particulate matter.[12] Cement kilns that burn hazardous waste are subject to the regulation because they are defined as industrial furnaces.[13] Prior to the BIF rule, cement kilns burning hazardous waste for energy recovery in urban areas could do so only if they complied with the emission standards applicable to hazardous waste incinerators.[14] These urban cement kilns, along with all other cement kilns that burn hazardous waste, are now subject only to the BIF rule requirements.

---

[8] 42 U.S.C. § 7412(b)(1).

[9] 42 U.S.C. § 7412(d).

[10] 42 U.S.C. §7412(f)(2).

[11] 56 Fed. Reg. 7134.

[12] While the BIF rules are promulgated under the authority of the Resource Conservation and Recovery Act, 42 U.S.C. §§ 6901 to 6992K, for the purpose of this report, the discussion concerning the BIF rule emission limits is included under the section on air pollution controls. For further discussion of the impacts of the BIF rule on solid waste management, see Section 7.4.1.

[13] 40 CFR § 260.10.

[14] 42 U.S.C. § 6924(q)(2)(C). See also 40 CFR § 266.31(c).

Burning hazardous waste that contains toxic organic compounds under poor combustion conditions can result in emissions of organic compounds. EPA regulates the emissions of organics as follows:

- A 99.99 percent destruction and removal efficiency (DRE) standard for organic hazardous constituents in waste feeds and a 99.9999 percent DRE for dioxin-listed hazardous waste;

- Limits on flue gas concentrations of carbon monoxide (CO) and hydrocarbons to control products of incomplete combustion; and

- Special controls for chlorinated dibenzodioxins and dibenzofurans (CDD/CDF) for BIFs burning hazardous wastes under specific circumstances.

The rules also establish emission limits for toxic metals based on site-specific testing and analyses (e.g., emissions testing, dispersion modeling).[15] Emissions of hydrogen chloride and free chlorine are regulated under the same general approach. EPA established a particulate matter emission limit to control emissions of toxic metals; metals and organic compounds may adsorb onto particulate matter in the flue gas. Under the terms of an October 22, 1993 settlement, EPA will initiate a new rulemaking on whether to revise provisions of existing BIF regulations that establish standards for cement kilns by September 20, 1995.[16]

In an effort to protect the public from health risks associated with burning hazardous wastes, EPA announced on September 28, 1993 enforcement actions against 11 cement kilns for violations of the BIF rules. These enforcement actions are seeking over $13 million in penalties from owners and operators for violations that range from failure to comply with emission standards and inadequate monitoring of hazardous waste fuel feeds to failure to maintain proper records.

The BIF rule directly affects the regulatory status of CKD generated by cement kilns burning hazardous waste as fuel. These effects are discussed in detail in the Solid Waste Management Federal Controls section (7.4.1).

7.1.2 State Controls

At the state level, California, Michigan, Pennsylvania, and Texas have established air quality requirements for CKD management that incorporate the federal standards and also subject cement plants to more stringent visible emission or opacity limitations. A summary of the four states' air pollution controls can be found in Exhibit 7-2 and a discussion of the individual state's air quality requirements follows.

---

[15] Owners and operators must analyze the hazardous waste to be burned and comply with the standards for each of the 10 metals (antimony, arsenic, barium, beryllium, cadmium, hexavalent chromium, lead, mercury, nickel, selenium, silver, and thallium) that could reasonably be expected to be in the waste.

[16] Horsehead Resource Development Co. Inc. v. EPA, No. 91-1221 (D.C. Cir. Oct. 22, 1993). EPA also agreed to describe the option of adopting technology-based emission standards for cement kilns. Final rulemaking would be required by December 15, 1996.

Exhibit 7-2

Summary of State Air Pollution Controls

States	California	Michigan	Pennsylvania	Texas
Permits	Permit to construct and to operate; some air pollution control districts require permitting of CKD storage facilities	Permit to construct and to operate	Permit to construct and to operate; permit for fugitive emissions	Permit to construct and to operate
General Requirements	Compliance with Federal NSPS, and PSD and Nonattainment Review	Compliance with Federal NSPS, and PSD and Nonattainment Review	Compliance with Federal NSPS, and PSD and Nonattainment Review	Compliance with Federal NSPS, and PSD and Nonattainment Review
Particulate Matter Emission Controls	Particulate matter emission limits; opacity limits	Particulate matter emission limits; opacity limits	Particulate matter emission limits; opacity limits	Particulate matter emission limits; opacity limits
Fugitive Dust Emission Controls	Air pollution control district may require fugitive dust control program	State may require fugitive dust control program	Fugitive emission controls as permit condition	Opacity limits

California

The California Air Resources Board (ARB), local or regional air pollution control districts, and air quality management districts ("air districts") are the state agencies primarily responsible for controlling air pollution.[17] The ARB has responsibility to set air standards, measure local compliance, assist air districts in the preparation of plans to attain the standards, and review those plans and their implementation.

Air districts have the primary responsibility for enforcement of state and air district regulations. Enforcement options available to the air districts include notices of violation, abatement orders, administrative penalties, civil and criminal penalties, and permit revocations.[18] The ARB reviews district enforcement practices and is authorized to exercise district enforcement authority if it finds that a district's actions are inadequate.[19]

The air districts closely monitor compliance with fugitive dust emission limits for cement plants. The North Central Coast Air Basin inspectors review cement plant operations and records monthly.[20] Other air districts usually inspect cement plants annually unless there has

[17] Cal. Health and Safety Code §§ 39000-44384.

[18] Cal. Health and Safety Code §§ 42400-42402.

[19] Cal. Health and Safety Code §§ 41502-41507.

[20] Personal communication with Greg Chee, Air Quality Engineer, North Central Coast Air Basin, March 3, 1993.

been a complaint or reason to believe a cement plant is in violation.[21] Inspectors review the measures that facilities use to control fugitive dust emissions from CKD such as storage tanks or storage buildings.

Ambient Air Quality Standards

The state ambient air quality standards adopted by the ARB are in addition to the NAAQS adopted by EPA under the Clean Air Act. In adopting state ambient air quality standards, the ARB is required to consider "the public health, safety, and welfare, including, but not limited to health, illness, irritation to the senses, aesthetic value, interference with visibility and effects on the economy." According to a December 1988 ARB report, 23 of California's 41 air districts were in federally-designated nonattainment areas.[22] Therefore, most regulatory attention focuses on developing rules necessary to attain the federal standards.

Currently, California state ambient air quality standards exist for the following pollutants:

- ozone (O_3);
- carbon monoxide (CO);
- nitrogen dioxide (NO_2);
- sulfur dioxide (SO_2);
- particulate matter (PM_{10});
- sulfates (SO_4);
- particulate lead (Pb);
- hydrogen sulfide (H_2S); and
- visibility-reducing particles.[23]

Authority To Construct

An owner or operator of a cement plant proposing to construct or modify a stationary source in California that may emit pollutants into the atmosphere must first obtain an Authority to Construct from the county or regional air pollution control district or air quality management district where the source is or will be located. The air districts must ensure that emissions from such sources will not interfere with the attainment and maintenance of state ambient air quality standards.

Generally, an air district requests the following information before granting an Authority to Construct:

- Description of the business, including the materials used and the particle sizes of all bulk solids involved;
- Type of air pollution control equipment and its anticipated degree of efficiency;
- Types of fuel; and
- Operating schedule for emission sources.

[21] Personal communication with Tom Krinke, Air Quality Specialist, Compliance Section, San Bernadino Air Quality Control District, July 28, 1992.

[22] Air Resources Board, Stationary Source Division, *Technical Review Group Emissions Credit Systems and New Source Review Programs: A Report to the Legislature* (Dec. 8, 1988).

[23] 17 CCR § 70200.

Permit To Operate

Cement plants must also obtain a Permit to Operate from the air district for the area in which the facility is located. In general, the air district asks the applicant to verify that construction or modification of a facility was completed in accordance with the Authority to Construct and that the facility will meet the district's regulations.

Prevention of Significant Deterioration and New Source Review

Unless the local air district has been delegated the authority by EPA to issue these permits, a new or modified project may also require a PSD permit from EPA. A PSD permit is only required if the facility is located in an attainment area for a pollutant.

In nonattainment areas, air districts have adopted New Source Review Rules, which regulate all new or modified sources with emissions exceeding a specified limit for any pollutant for which a state or national ambient air quality standard exists. For example, standards exist for sulfur dioxide and particulate matter. The average "trigger" level is 250 pounds per day. If this level is exceeded by the projected operation of the new source or modification of an existing facility, New Source Review requirements become applicable.

Approval for the new source or modification will be granted only if the owner or operator provides "offsets" for all net emission increases.[24] The owner or operator must reduce emissions within the source at a 1 to 1 ratio, or reduce other sources in the nonattainment area at a ratio of at least 1.2 to 1. For example, an applicant proposing a new or modified source producing 1,000 pounds of pollutants per day must eliminate a minimum of 1,000 pounds of pollutants per day from his/her existing source or 1,200 pounds of pollutants per day from other existing sources. Offsets must be located upwind in the same or adjoining counties, or within 15 miles downwind of the proposed new or modified source.

In addition to complying with applicable New Source Review and/or PSD requirements, owners and operators of cement plants must comply with the federal NSPS.

Cement plants are also subject to visible emission limitations in accordance with Section 41701 of the California Health and Safety Code. This provision prohibits any air contaminant discharge to the atmosphere that continues for an aggregate period of more than three minutes in any one hour in which such emission is either:

- As dark or darker than "No. 2 on the Ringelmann Chart";[25] or
- Of such opacity as to obscure an observer's view in the same degree as smoke equalling Ringelmann No. 2.[26]

---

[24] Emission Offset Interpretive Ruling, 40 CFR Part 51, Appendix S.

[25] A Ringelmann Chart grades the shade or opacity of visible air contaminant emissions. The chart is a color coded strip that an observer holds up and compares to the shade of color of the air emissions discharging from a smokestack. Darker colors and higher numbers correspond with greater emissions. Ringelmann's Scale for Grading the Density of Smoke as published in United States Bureau of Mines Information Circular 8333.

[26] Cal. Health and Safety Code §§ 41701, 41704.

Some Air Districts, such as the South Coast Air Quality Management District, set more stringent opacity limits (emissions no darker than No. 1 on Ringelmann Chart) and these have been applied to cement plants.[27]

These visible emission limitations also regulate fugitive dust emissions from CKD storage. In addition, some air pollution control districts require permitting of CKD storage facilities and fugitive dust control programs. For example, air pollution control districts have required cement plants to control fugitive emissions by managing CKD in storage tanks or in warehouses before the CKD is insufflated (recycled to the feed stream) or landfilled.

Michigan

Ambient Air Quality and Permits

The Air Pollution Control Commission within the Michigan Department of Natural Resources (DNR) establishes state ambient air quality standards and requires permits for construction and operation of a cement plant.[28] Permits, for the most part, are issued by the regional DNR offices.[29] Permit requirements subject cement plants to the same general requirements as in California (e.g., compliance with the U.S. EPA's New Source Performance Standards for cement plants, and PSD and Nonattainment Review).[30]

As in California, inspections and enforcement occur primarily at the district (Michigan DNR) level. The Michigan DNR Air Quality Division has approximately 35-40 inspectors, including district supervisors, to review all stationary sources of air pollution.[31] For cement plants, inspections are performed annually. The district offices may inspect more frequently in response to complaints or if a facility has a history of compliance problems. The Wayne County Health Department, Air Pollution Control Division, monitors the cement facility located in Wayne County.[32]

On the basis of submitted monitoring reports or plant inspections, the DNR district office will send a notice of violation for any noncompliance with federal or state requirements or permit conditions. This notice of violation requires initiation of corrective actions and may establish a deadline for compliance. If a voluntary agreement is not entered into with DNR, DNR may initiate further enforcement actions such as administrative orders, injunctions, and civil and criminal penalties.

---

[27] SCAQMD Rule 401.

[28] Mich. Comp. Laws § 336.13.

[29] The Air Pollution Control Commission issues a permit only when a facility's emissions significantly affect a PSD or nonattainment area.

[30] Mich. Admin. Code §§ 336.1203 and 336.1208.

[31] Personal communication with Barb Rosenbaum, Michigan Department of Natural Resources, Air Quality Division, September 10, 1993.

[32] Personal communication with Bob Zabick, Wayne County Health Department, Air Pollution Control Division, Enforcement, October 13, 1992. Currently, the cement plant located in Wayne County only grinds clinker delivered from Canadian cement plants. The kiln which was permitted to burn hazardous waste for fuel was shut down for economic reasons.

Particulate Matter and Visible Emissions Limitations

Michigan has established particulate matter emission limits for cement manufacturers that are equivalent to the federal new source performance standards, but the state may impose more stringent emission limits. The Air Pollution Control Commission usually applies the opacity limit in the federal new source performance standards for cement plants (that range from 20 percent for kilns to 10 percent for clinker coolers). The state regulations require a cement plant not to exceed 27 percent opacity for more than one six-minute period per hour.[33] The Michigan Air Pollution Control Commission is also authorized to require a more stringent standard on a case-by-case basis.

In addition, the Air Pollution Control Commission may request that a cement plant's operator submit a fugitive dust control program.[34] This requirement applies to any facility that "processes" bulk materials, including raw materials for cement manufacture or clinker on its way to a grinding unit. These requirements are triggered only by a notification from the Commission. The Commission has required fugitive dust control programs that include the pneumatic conveyance of CKD, the use of particulate matter collection devices during transfer operations, the application of dust suppression liquids to haul roads (twice each month), and weekly sweeping of paved haul roads. In addition, at one cement facility, the Commission required that CKD be pneumatically pumped to the floor of a quarry rather than simply dumped from the top of the quarry. More recently, the Commission required a facility to mix its CKD with water to form pellets as a means of reducing fugitive emissions.

Pennsylvania

Under the Pennsylvania Clean Air Act, the Department of Environmental Resources (DER) establishes ambient air quality standards for the Commonwealth.[35]

In a manner similar to that used in California and Michigan, permitting and enforcement of air programs generally are handled by the six regional DER offices. However, Allegheny and Philadelphia Counties have autonomous air pollution control programs that have been approved by DER. As in the other states, permits to construct and operate are required.

DER conducts annual inspections of cement plants and reviews monitoring reports submitted by facilities. Generally, DER enforcement procedures parallel the enforcement procedures employed in California and Michigan. DER is concerned with fugitive dust emissions from CKD storage and other plant operations.[36] Inspectors are placing some emphasis on reviewing fugitive dust control programs and discouraging the use of open storage of CKD. Currently, all the operating cement plants recycle some of the CKD back into the kiln. DER is encouraging this trend to reuse CKD.

---

[33] *Mich. Admin. Code* § 336.1301 (1)(a).

[34] *Mich. Admin. Code* §§ 336.1371-72.

[35] 35 Pa. Stat. § 4004.

[36] Personal communication with Gary Linns, Pennsylvania Department of Environmental Resources, Air Quality Control Division, October 9, 1992.

Nonattainment Review

In Pennsylvania, special permit requirements exist for a cement plant locating in or significantly affecting nonattainment areas.[37] Pennsylvania's nonattainment review is slightly different than the reviews required by California and Michigan. These special permit requirements only apply to cement plants constructed or modified after June 30, 1979. In addition, a cement plant must discharge greater than 50 tons per year of emissions, 1,000 pounds per day, or 100 pounds per hour, whichever is more restrictive. Finally, facilities must also be significantly affecting a nonattainment area. To be considered significantly affecting a nonattainment area, a facility's discharge must exceed established emission limits. For example, the significance levels for ambient total suspended particulate and sulfur dioxide are one microgram per cubic meter annually, or five micrograms per cubic meter in a 24-hour period. In determining whether a source exceeds the emission rates or significance levels, all emissions resulting from the operation must be considered, including flue (e.g., stack) and fugitive (e.g., material transfer, storage piles, and roads on the plant property) emissions. To be permitted, a facility that exceeds the significance levels must offset its emissions by reducing emissions from its own facility or another facility located in the nonattainment area or from a facility affecting the nonattainment area. To improve air quality in the nonattainment area, the ratio of particulate matter or sulfur dioxide emission reductions required for any new emissions must be equal to or greater than 1.3 to 1 for flue emissions and 5 to 1 for fugitive emissions.

Particulate Matter and Visible Emissions Limitations

Pennsylvania has additional criteria for particulate matter that apply independently of PSD and nonattainment review. No source may cause the emission of visible air contaminants that exceed either of two opacity limits:

- 20 percent for a three-minute period in any hour; or
- 60 percent at any time.[38]

Visible emissions may be measured by either (1) any device approved by DER to provide accurate opacity measurements or (2) by a trained observer.

The Pennsylvania Air Pollution Control regulations also establish particulate matter emission limits for cement plants.[39] Cement plants may not emit particulate matter, at any time, in excess of either a rate calculated by a formula (variables exist for clinker production and clinker cooling) or 0.02 grains per dry standard cubic foot in the effluent gas.

As in Michigan, the emission into the atmosphere of fugitive air contaminants from a source is prohibited unless permitted by the state.[40] DER may require an owner or operator of a source to provide a description of proposed control measures, characteristics of emissions, quantity of emissions, and ambient air quality analysis showing the impact of the source on

---

[37] 25 Pa. Code §§ 127.61-127.73.

[38] 25 Pa. Code § 123.41.

[39] 25 Pa. Code § 123.13.

[40] 25 Pa. Code § 123.1.

ambient air quality. At least two cement plants in Pennsylvania have been required to store CKD in a warehouse or silo to control fugitive emissions.

> Permits may only be issued if the fugitive emissions, after being treated by an appropriate air pollution control, meet the following requirements:
>
> - Emissions are of minor significance with respect to causing air pollution; and
> - Emissions are not preventing or interfering with the attainment or maintenance of any ambient air quality standard.

Texas

The Texas Clean Air Act authorizes the Texas Air Control Board to set standards and emission limits for air pollution.[41] As in the other states, the 11 cement plants in Texas must have permits for construction and operation and must comply with applicable air quality standards.

On September 1, 1993, the Texas Air Control Board was abolished and all powers and duties were transferred to the Texas Water Commission. This transfer of authority completed the process of consolidating all environmental protection programs into one agency. At this time, the agency became the Texas Natural Resources Conservation Commission.

As in the other three states, primary responsibility for compliance monitoring occurs in the regional offices. Personnel from 12 regional offices conduct annual inspections of cement plants.[42] The regional offices also respond to citizen's complaints, review upset reports (i.e., if a facility violates its emission limitations, the facility must report this violation to the Commission), perform investigations, and if necessary, recommend enforcement actions. The primary enforcement mechanism is the notice of violation. The notice of violation provides a facility operator the opportunity to correct any problems within 30 days. Facilities usually come into compliance within this time period. The Commission will take no further action if the violation is not continuing or not a repeating problem. If a facility fails to conduct remedial activities, however, additional enforcement activities may be initiated.

Other Requirements Applicable to Cement Plants

Because the Air Quality Program of the Texas Natural Resources Conservation Commission requires the control of air pollution from visible emissions and particulate matter, cement plants are subject to visible emission requirements that vary depending upon age and exhaust gas flow rate.[43] Currently, the opacity limits for existing cement plants in Texas range from 10 percent (the facility was subject to more stringent PSD requirements) to 30 percent. Visible emissions must not exceed the following opacities:

(1) 30 percent average over a six-minute period for any source on which construction was begun on or before January 31, 1972;

(2) 20 percent average over a six-minute period for any source on which construction was begun after January 31, 1972; or

---

[41] Tex. Health and Safety Code § 1.05.

[42] Personal communication with Richard Lee, Natural Resources Conservation Commission, Air Quality Program, Compliance Division, August 25, 1993.

[43] Tex. Admin. Code tit. 31, § 111.111.

(3) 15 percent average over a six-minute period for any source having a flow rate greater than or equal to 100,000 cubic feet per minute unless a continuous opacity monitoring system is installed.

Categories (1) and (2) apply to facilities that utilize a continuous opacity monitoring system but otherwise would be subject to the third category. Fugitive dust emissions from CKD piles or roads on which CKD is transported must not exceed an opacity of 30 percent over a six-minute period.

Continuous opacity monitors and annual inspections assist in keeping a facility in compliance. Currently, all 11 portland cement manufacturing plants in Texas have continuous opacity monitors. Facilities submit quarterly monitoring reports and notify the Air Quality Program of any exceedance of the permit requirements. Monitoring and report records must be maintained on site for two years. Inspectors review these on-site records as part of the annual facility inspection.

In addition, ground level particulate matter concentration limits exist for all sources, including cement plants.[44] Emissions of particulate matter from a source may not exceed either of the following net ground level concentrations:

- 200 micrograms per cubic meter of air sampled, averaged over any three consecutive hours; or

- 400 micrograms per cubic meter of air sampled, averaged over any one hour period.

The owner or operator of a cement plant also must notify the Air Quality Program of any major upset condition that causes or may cause an excessive emission.[45] A "major upset" is defined as "[a]n unscheduled occurrence or excursion of a process or operation that results in an emission of air contaminants that contravenes the Texas Clean Air Act and is beyond immediate control . . ."[46] The notification must identify the cause and duration of the upset and the equipment involved. In addition, the compound-specific types and quantities of emissions released during the upset must be provided. Upon request of the Air Quality Program, the owner or operator may be required to prepare a technical evaluation of the upset. At a minimum, the evaluation must include an analysis of the probable causes of the upset and any necessary actions to prevent or minimize recurrence.

---

[44] Tex. Admin. Code tit. 31, § 111.155. Net ground level concentrations are obtained by subtracting the representative concentration of air contaminants flowing onto a property from the concentration of air contaminants generated by the source as measured at or beyond the property boundary. Id. at § 101.1.

[45] Tex. Admin. Code tit. 31, § 101.6.

[46] Tex. Admin. Code tit. 31, § 101.1.

Special Report on Texas Cement Plants' Excess Emissions

From November 1990 to May 1991, the Air Quality Program conducted a special study of all 11 portland cement manufacturing plants in Texas to gain a better understanding of emissions.[47] The study analyzed whether the kilns and clinker coolers were in continuous compliance with particulate matter and stack opacity limits, such as those found in the federal NSPS (40 CFR Part 60, Subpart F). The Program conducted the cement plant study to gain a better understanding of emissions, especially as more facilities are using hazardous waste as a fuel.

The Air Quality Program concluded that quantities and causes of excess emissions varied greatly between companies. The Program reviewed the causes of excess emissions, their levels and duration, and what actions were taken to prevent a recurrence in the future. In response to the study, the Air Quality Program developed guidance for companies to use in reporting excess emissions. The Air Quality Program also provided resources for the Compliance Division to hire an additional staff person with the responsibility to monitor maintenance and upsets at facilities.[48]

7.2 WATER

7.2.1 Federal Controls

The Clean Water Act

The basic framework for federal water pollution control is the Federal Water Pollution Control Act of 1972, also known as the Clean Water Act (CWA).[49] The CWA establishes national goals to eliminate the discharge of pollutants into navigable waters. The principle means to achieve these goals is to impose effluent limitations on, or otherwise to prevent, discharges of pollutants into any waters of the United States.

Under the Clean Water Act, the discharge of a pollutant from a point source into any waters of the United States, except as authorized by a permit, is illegal. Accordingly, any cement production facility seeking to discharge wastewater effluent and/or a point source discharge of stormwater to surface waters must apply for and obtain an NPDES permit. A cement facility has typically two types of discharges: process wastewater and stormwater run-off.

To impose limitations on pollutant discharges, the CWA established a nationwide NPDES permit program (see 40 CFR 122). An NPDES permit establishes specific "effluent limitations" and conditions regarding any discharges to surface waters. For the cement industry, these effluent limitations include requirements for total suspended solids, temperature, and pH. A permit writer may impose additional limits on toxics if an adequate basis exists using a Best Professional Judgment (BPJ) determination. Monitoring and reporting requirements assure

---

[47] Cement Plant Resources Group, draft *Final Report on Cement Plant Excess Emissions* (July 31, 1991).

[48] Personal communication with Richard Lee, Natural Resources Conservation Commission, Air Quality Program, Compliance Division, August 25, 1993. This person's responsibilities include not only monitoring maintenance and upsets at cement plants but also at facilities that emit vinyl chloride.

[49] 33 U.S.C. §§ 1251-1387.

compliance with the applicable effluent guideline limitations (40 CFR 411), water quality standards, and pretreatment standards.

Under Section 402(b) of the CWA, responsibility for administration of the NPDES program can be approved for individual states. To obtain program approval, a state must have a statutory program for regulating discharges to surface waters. EPA has approved state programs for implementing the NPDES permit system for three of the states analyzed in this report: California, Michigan, and Pennsylvania. In these states, only one state water permit regulating the discharge of pollutants is required. In Texas, which has not received authority, both federal and state permits must be obtained.

For regulatory purposes, process wastewater has been divided into two categories. The first category of process wastewater includes the following discharges:

- water that comes into contact with kiln dust as an integral part of the manufacturing of cement; or
- water that is used in wet scrubbers to control kiln stack emissions.

The second category of process wastewater includes:

- water that does not come into contact with kiln dust as an integral part of the manufacturing process; and
- water that is not used in wet scrubbers to control kiln stack emissions.

The other discharge of concern is stormwater run-off from materials storage piles and exposed surfaces at a facility.

For those cement facilities that discharge to publicly owned treatment works (POTWs) and not directly to surface waters, different but comparable treatment standards exist. These indirect discharges are regulated by pretreatment standards. Pretreatment standards protect the operation of POTWs (e.g., prohibit the introduction of pollutants that create fire or explosion hazards) and prevent the discharge of pollutants that might pass through POTWs without receiving adequate treatment. Cement facilities are subject to the general pretreatment standards in 40 CFR Part 403 as modified by or in addition to the effluent guideline limitations in 40 CFR Part 411 discussed above. Pretreatment requirements are directly enforceable by EPA and states with NPDES permitting authority.

The CWA also requires that states establish water quality standards for all surface waters. The standards are subject to EPA approval. States are allowed to set more stringent water quality standards than those derived by EPA in water quality criteria documents. In establishing NPDES permit requirements, the effluent limitations discussed above (that established a technology-based minimum treatment standard) may be superseded by more stringent effluent limitations necessary to maintain water quality in specific water bodies. Therefore, the stringency of particular water quality standards, established to protect designated uses for sections of a water body, can significantly affect the final effluent guideline limitations specified in a facility's NPDES permit.

In addition to controls on process wastewater from cement production facilities, stormwater run-off is also regulated. Generally, stormwater discharges from cement facilities contain CKD from materials storage piles and surficial areas at a facility. On November 16, 1990, EPA adopted a rule setting forth NPDES permit application requirements for stormwater discharges associated with industrial activity.[50] Stormwater run-off from cement facilities is

[50] 40 CFR § 122.26.

considered a discharge associated with industrial activity.[51] Facilities located in Michigan may apply for coverage under a stormwater permit through an individual application. In addition to an individual application for a permit, facilities in Texas, California, and Pennsylvania may also obtain coverage under a general permit.[52]

Under the stormwater permit application regulations, pollution prevention plans and best management practices will be required to reduce pollutants in stormwater discharges. Prior to 1990, cement plants already had to meet the effluent limitations for run-off from materials storage piles. Numeric limitations existed for discharges of total suspended solids (TSS) and pH levels. Facilities meeting these limitations are deemed to be in compliance with the new stormwater requirements for the remainder of an existing NPDES permit.[53] If an existing permit, which covers discharges of stormwater, expires, the facility is required to obtain separate permits for both their stormwater discharge and any process wastewater discharge.

Safe Drinking Water Act

The Safe Drinking Water Act (SDWA) has several provisions that can be significant to the operation of cement plants, including requirements for setting drinking water regulations and maximum contaminant levels (MCLs) for toxic water contaminants, as well as wellhead protection area programs. MCLs are "the maximum permissible level of a contaminant in water which is delivered to any user of a public water system."[54] EPA is responsible for establishing MCLs for pollutants as part of the primary drinking water regulations.

The importance of MCLs can be found in determining the level of cleanup required at Superfund sites containing CKD (for further discussion of Superfund and CKD, see section 7.4.1). Two cement production facilities described in the Damage Case Study (see Chapter 6) are currently listed on the National Priorities List. These facilities are:

- Holnam Incorporated, Mason City, Iowa; and
- Portland Cement Company, Salt Lake City, Utah.

For these facilities, MCLs constitute one of the primary classes of applicable and relevant or appropriate requirements (ARARs) when any hazardous substance, pollutant, or contaminant will remain on a Superfund site. MCLs have been established for many of the compounds found in CKD, including arsenic (As), barium (Ba), cadmium (Cd), chromium (Cr), mercury (Hg), selenium (Se), and silver (Ag).

The SDWA also requires EPA to establish national secondary drinking water regulations, standards that reflect welfare concerns such as odor, taste, and color. While these less stringent

---

[51] 40 CFR § 122.26(b)(14)(ii).

[52] EPA issued NPDES general permits for stormwater discharges associated with industrial activity on September 6, 1992. 57 Fed. Reg. 41236. Facilities in Texas are eligible for general permits because EPA maintains NPDES authority for Texas while California and Pennsylvania have been approved to issue general permits as part of their NPDES programs and have chosen to issue general permits. Michigan does not yet issue general permits.

[53] 40 CFR § 122.26(e)(6).

[54] 42 U.S.C. §§ 300f-300j.

standards protect public welfare other than human health, their violation can be used to justify the abandonment of a water source or treatment to remedy the problem. The national secondary drinking water standards most applicable to CKD are those for pH and total dissolved solids.

In addition, the wellhead protection area program encourages states to develop systematic and comprehensive programs within their jurisdictions to protect public water supply wells and wellfields. A wellhead protection area is defined as "the surface and subsurface area surrounding a water well or wellfield, supplying a public water system, through which contaminants are reasonably likely to move toward and reach such well or wellfield."[55] Based on the 1991 PCA Survey, 25 of 91 operating cement kiln facility respondents indicated that they are located within one mile of a public drinking water well.

7.2.2 State Controls

California, Michigan, and Pennsylvania have been delegated responsibility for implementation of the NPDES program to regulate discharges to surface water; in Texas, however, where delegation has not occurred, Texas has its own water program but EPA continues to manage the NPDES program. In California, Michigan, and Pennsylvania, only one state water permit regulating the discharge of pollutants is required. In Texas, where delegation has not occurred, both federal and state permits must be obtained. A summary of the four states' water pollution controls can be found in Exhibit 7-3, below, and a discussion of individual state's water quality requirements follows.

Exhibit 7-3

Summary of State Water Pollution Controls

States	California	Michigan	Pennsylvania	Texas
EPA-Approved Permit Program	Yes; adopted all federal NPDES requirements	Yes; adopted all federal NPDES requirements	Yes; adopted all federal NPDES requirements	No; separate State permit and a NPDES permit from EPA Region VI
Water Quality Standards	Existing and anticipated beneficial uses; regional water boards adopt numeric water quality standards for specific water body segments	All waters protected for agricultural use, public water supply, and recreation; numeric water quality standards for specific water body segments	Designated water uses; numeric water quality standards for specific water body segments	Three classifications: recreation, domestic water supply, and aquatic life; numeric water quality standards for specific water body segments

[55] 42 U.S.C. § 300h-7(e).

Exhibit 7-3 (continued)

Summary of State Water Pollution Controls

States	California	Michigan	Pennsylvania	Texas
Stormwater Requirements	General stormwater permit applicable to all stormwater dischargers (not by industrial category)	Individual stormwater permits (no general permitting authority)	Individual permit for run-off from material storage piles; general permit for all other stormwater discharges	EPA administers the stormwater program but must incorporate state hazardous metal effluent limitations to comply with Texas water quality standards
Ground-Water Protection Policy	Non-degradation; classification system based on beneficial uses	Non-degradation; no degradation above local background levels in all current and potential drinking water sources	Non-degradation; use of best demonstrated control technology and best management practices to protect ground-water resources	Non-degradation; four classes of ground water; EPA-approved wellhead protection program

California

The California Porter-Cologne Water Quality Act establishes the Water Resources Control Board and nine regional water resources control boards within the California Environmental Protection Agency. The state board and the regional boards are authorized to perform the following activities:

- Adopt water quality plans;
- Regulate discharges to surface and ground water; and
- Require cleanup of discharges of hazardous materials and other pollutants.

Responsibility for water quality planning is shared by the state board and the nine regional boards.

Holders of state-issued NPDES permits must provide monthly discharge monitoring reports. The monitoring data are input into a computerized data base (EPA's Permit Compliance System (PCS)).[56] The monitoring data are compared to the effluent limitations included in the permit, and cement plants that exceed permit limits may be subject to possible enforcement action.

The state and regional boards may inspect a facility as necessary to ensure compliance with water quality requirements. The state board does not consider cement plants major dischargers (as compared to some POTWs that may discharge over a million gallons of water per day) and therefore, these facilities are subject to less frequent inspections. However, the state board must inspect each facility at least once per year. The regional boards will consider more

[56] PCS is a computerized management information system which contains data on the NPDES permit-holding facilities. PCS tracks permit status, permit limits, discharge monitoring reports, violations, and enforcement activities.

frequent inspections if a cement plant has received a complaint, exceeded permit limits, or if the facility has a past record of permit violations.

The state water resources control board has broad enforcement authority. The state board may designate and authorize regional water quality control boards to exercise enforcement authority. The state board and designated regional boards have administrative and civil penalty authority.[57] A regional board can issue a cease and desist order to a discharger who is violating a discharge requirement or prohibition if a likelihood exists that the violation will continue in the future. The board may direct the discharger to comply immediately or in accordance with a time schedule set by the board to remedy or prevent future violations. A regional board may, through the Office of the Attorney General, seek a Superior Court injunction to prohibit an actual or threatened waste discharge if it constitutes an emergency. This applies if the discharge or threatened discharge causes or will cause a condition of pollution or nuisance constituting an emergency that requires immediate action to protect public health, safety, or welfare.[58]

The Porter-Cologne Act contains a number of civil and criminal penalty provisions.[59] Civil penalties may be imposed on owners or operators that negligently or intentionally violate a cease and desist order. Persons who, even unintentionally, cause or permit the discharge of a hazardous substance (under California law, CKD is considered a hazardous substance, see Section 7.4.2 for further discussion) that causes pollution may be strictly liable for civil penalties up to $25,000 per day. Criminal penalties ranging up to one year's imprisonment may be imposed for an owner's or operator's failure to report an unintentional discharge of hazardous substances or for the falsification of required reports.

Process Wastewater Requirements

California has a federally-approved NPDES permit pretreatment management program and the authority to issue general permits. The regional water quality boards implement the NPDES permit program, subject to EPA review. California's water quality regulations adopt by reference all applicable federal NPDES and pretreatment regulations and, therefore, cement kiln facilities are subject to these requirements.

Water Quality Standards

The California Water Resources Control Board has adopted state-wide water quality principles and guidance that the regional boards may make more stringent. In addition, each regional board has adopted water quality standards for specific water body segments, and these water quality standards are included in the region's water quality control plan. State water quality policy requires long-range resource planning, including ground-water and surface water management programs, and control and use of reclaimed water. Wastewater discharges must be treated to protect existing and anticipated beneficial uses of such water. California's ground-water protection policy includes closely regulating a number of potential sources of ground-water degradation, such as waste management facilities.

---

[57] Cal. Water Code §§ 13300-13306 and §§ 13261, 13385, 13387.

[58] Cal. Water Code § 13340.

[59] Cal. Water Code §§ 13350-13371.

Stormwater Management Requirements

In November 1991, the California Water Resources Control Board adopted a General Industrial Stormwater Permit to comply with the federal requirements for stormwater discharges. In so doing, California decided against issuing general permits to specific industrial categories, and instead established a general permit that applies to all industrial stormwater dischargers. Cement kiln facilities are subject to both the stormwater requirements of this general permit and to the federal effluent limitations for materials storage pile run-off. Cement kiln facilities will be required to develop pollution prevention plans, implement best management practices to control stormwater discharges, and establish monitoring programs.

Michigan

The Michigan Water Resources Commission Act authorizes the Water Resources Commission to issue permits that regulate the discharge of all pollutants to the waters of the state.[60] As in California, these permits are to assure compliance with the CWA and the NPDES program. Michigan has been delegated authority to administer the NPDES permit program for industrial facilities and to conduct its own pretreatment program. The state office issues NPDES permits that apply the federal effluent limitations, including the numeric limitations for run-off from materials storage piles (see 40 CFR 411).[61] These permits contain pH and total suspended solids limitations for treated process waters, treated quarry ground water and quarry stormwater. The state, however, has not been delegated by EPA the authority to issue general permits. Therefore, cement plants must submit individual applications to comply with the new federal requirements for stormwater discharges associated with industrial activity.

Regional DNR offices conduct inspections and enforce permits.[62] Some cement plants are considered major dischargers and are inspected annually. Like California, Michigan uses PCS to meet the information, inspection, and enforcement needs of its water quality program. The violations discovered most often for all industrial facilities, including cement plants, are effluent limitation violations and permit compliance schedule violations. Monitoring and recordkeeping violations occur less frequently. About 80 percent of all industrial and municipal dischargers are found to be "significantly in compliance" with their permit requirements. An additional 10 percent are found to be out of compliance, with less serious violations. The remaining 10 percent are out of compliance, with more serious violations. Overall, industrial facilities are in better compliance today than in the past due to increased environmental awareness. The cement manufacturing industry is not generally considered to have major compliance problems.[63]

The type of enforcement action taken depends on the severity of the violation. When a facility is found to be out of compliance, DNR first issues a verbal or written notice of noncompliance. If no remedial action occurs, a formal notice of violation is issued. Negotiated

---

[60] Mich. Comp. Laws §§ 323.1-323.13.

[61] Personal communication with Pete Ostlund, Chief of Industrial Permits Section, Surface Water Quality Division, Michigan Department of Natural Resources, September 15, 1992.

[62] Personal communication with Tom Rohrer, Chief of Enforcement Unit, Surface Water Quality Division, May 24, 1993.

[63] *Ibid.*

settlements bring most facilities into compliance. These settlements include penalties and schedules to return a facility into compliance. For more serious violations, emergency situations, and excessive recalcitrance on the part of the facility, DNR is authorized to issue abatement orders, revoke permits, and file civil and criminal actions.

Water Quality Standards

The state's water quality standards provide, as a minimum, that all waters be protected for agricultural use, navigation, industrial water supply, public water supply at the point of water intake, warm-water fish, and wading. Areas that must be suitable for swimming include all of the Great Lakes, their connecting waterways, and all inland lakes. The swimming rule does not apply in mixing zones, areas where a point source discharge is mixed with a receiving water. The overall aim is that all waters outside mixing zones must be suitable for swimming during the summer months. No degradation of waters may occur without a demonstration that such an activity would not be unreasonable and would promote the public interest. Dissolved solids must not exceed concentrations that are or may become injurious to any of the above designated uses.

Ground-Water Protection

Michigan also has established ground-water quality regulations to protect the public and to maintain the quality of ground waters in all usable aquifers for individual, public, industrial, and agricultural water supplies. These regulations establish the following:

- the goal of non-degradation of ground-water quality in useable aquifers;
- the requirements for hydrogeological study before permitting a discharge into ground waters;
- water quality parameters (e.g., metals, organic compounds, and toxic materials); and
- a ground-water monitoring system based on the hydrogeological study, local conditions, and the type of discharge for new and existing waste management facilities.

Pennsylvania

Pennsylvania's Clean Streams Law authorizes the Department of Environmental Resources (DER) to establish a program to prevent water pollution and to improve the purity of Pennsylvania's waters.[64] Pennsylvania has full authority to administer the federal NPDES permit program and to issue general permits. Unlike Michigan, DER's six regional offices issue individual permits. DER adopts the federal effluent limitations for cement plants and is implementing the federal requirements for stormwater discharges. An important feature of the state's NPDES program is that it applies both to streams and to ground water.

[64] 35 Pa. Stat. § 691.

The six regional offices conduct monitoring and enforcement activities, and have approximately 55 inspectors to regulate about 4,500 sewage and industrial dischargers.[65] Regional staff conduct annual inspections and respond to emergencies, pollution events, and complaints. Inspections include observations of treatment unit operation, effluent sampling, identifying problems, recommending solutions, and citing violations. During the past few years, Pennsylvania has made a considerable effort to enhance its monitoring program through automating the effluent limits data and the discharge monitoring using PCS. Monitoring data for all NPDES dischargers are reviewed on a routine basis.

Compliance and enforcement actions rely on both on-site monitoring and inspection data. Violations may result in notices, orders issued on site, penalty assessments, and civil and criminal actions. If environmental damage or willfulness was not involved, an attempt is made to obtain voluntary compliance. Usually a notice of violation requests correction by a specific date or the submittal of a compliance schedule. In more serious situations, higher level administrative, civil, or criminal actions may be the first step.

Water Quality Standards

Pennsylvania has established designated water uses and water quality criteria.[66] These designatd water uses include: support of warm-water fish; potable water supply, after treatment; industrial, livestock, and wildlife water supply; and irrigation, boating, fishing, water-contact sports, and aesthetics. In addition, specific water quality criteria for pH and total dissolved solids apply state-wide unless other numeric criteria are established for specific water body segments. In general, the pH limit is a range between 6.0 and 9.0, and the limit for total dissolved solids is 500 milligrams per liter on a monthly average with a maximum limit at any time of 750 milligrams per liter.[67]

Pennsylvania participates with the neighboring states of New Jersey, New York, and Delaware, as well as with the federal government, in the Delaware River Basin Compact. This agreement requires cooperative efforts to preserve the water's recreational and fish-producing value. The Delaware River Basin Commission, composed of the governors of the signatory states (or their designees) and the Secretary of the Interior, establishes comprehensive water quality standards. These standards impose limitations for pH and total dissolved solids that are more stringent than those imposed by Pennsylvania's water quality standards. Five cement facilities are located within the Delaware River Basin and are therefore subject to the Delaware River Basin Commission's water quality standards.

Ground-Water Protection

Pennsylvania has developed a Ground Water Protection Strategy to protect ground-water resources from contamination through the application of best demonstrated control technologies, the use of BMPs, monitoring of permit compliance, detection of ground-water contamination, and assessment and remediation. The Commonwealth's ultimate goal is non-degradation of

---

[65] A total of 5,614 inspections were conducted in FY 91 of industrial and municipal dischargers. See Pennsylvania Department of Environmental Resources 1992 Water Quality Assessment.

[66] 25 Pa. Code § 16.

[67] 25 Pa. Code § 93.6.

ground-water quality. While the state does not have ground-water quality standards, ground-water protection is considered when establishing permit requirements for wastewater and stormwater discharges or solid and residual waste management facility design standards.

Stormwater Management Requirements

Unlike Michigan, Pennsylvania has been delegated NPDES general permit authority by EPA. Cement kiln facilities can apply for coverage under Pennsylvania's general permit for discharges of stormwater associated with industrial activities. Cement plant operators are required to apply for individual stormwater discharge permits from DER for run-off from materials storage piles because they are subject to the Cement Manufacturing Point Source Category effluent limitations. The general permit, however, authorizes other stormwater discharges at a cement facility. The general permit requires that the owner of a facility develop and implement a Preparedness, Prevention, and Contingency Plan; comply with effluent limitations (e.g., pH between 6 and 9); and conduct annual monitoring.

Texas

In Texas, cement facilities subject to the federal NPDES permit program must receive an NPDES permit from EPA Region VI as well as an industrial discharge permit from the Texas Natural Resources Conservation Commission (Commission). Texas has not been delegated authority by EPA to administer the NPDES permit program for industrial facilities. Though cement facilities need dual endorsement, the requirements are similar. As Texas does not have any categorical effluent limitations for cement plants, both EPA Region VI and the Commission utilize the effluent guideline limitations for cement plants (40 CFR 411). These limitations are used as a minimum baseline, subject to more stringent limits, if necessary, to meet state water quality standards.

Unlike the other states, dual enforcement authority exists because both EPA Region VI and the Commission are responsible for compliance monitoring. EPA Region VI is responsible for monitoring compliance with the federal effluent limitations and the federal stormwater requirements. Per an agreement with EPA, the Commission will be primarily responsible for enforcement of the federal standards.[68] In addition, the Commission must identify alleged Texas Water Code violations and bring violators into compliance with the statutes.

The Commission has 14 field offices that conduct inspections (a 15th office will be added in 1994). Together these offices have approximately 50-70 inspectors.[69] The Field Operations Division, located at the Commission's headquarters in Austin, coordinates inspection activities among these field offices. The frequency of inspections is established based on the type of facility. The field offices inspect all major facilities annually. Cement plants, however, are not considered major facilities because they do not discharge large quantities of effluent.[70] After inspecting all major facilities, time and budget permitting, the offices will inspect other, minor dischargers such as cement plants. The offices will consider minor dischargers a high priority for

---

[68] Personal communication with Everett Spenser, EPA Region VI, Enforcement Branch, September 9, 1993.

[69] Personal communication with Rick Ruddell, Watershed Management Division, and Earnest Heyer, Field Operations Division, May 16, 1993.

[70] *Ibid.*

inspection if they have received a complaint or if the facility has a past record of violations. Inspectors review a facility's compliance with the terms of its permit, observe treatment facility operations, and sample effluent discharges.

The Commission takes enforcement actions based on results of inspections by the field offices, monitoring data included in the monthly effluent report (Texas also uses PCS to manage discharger information), and public complaints. In a manner similar to that used in other states, minor violations are handled by the field office. These offices send out notices of violations and require the permittee to return to compliance within 30-60 days. The field offices refer to headquarters all severe and continuing violations. The Commission coordinates enforcement activities with EPA Region VI for violations at facilities with NPDES permits. In addition, the Commission meets with EPA Region VI staff on a quarterly basis to discuss enforcement activities and noncompliance reports. Commission and EPA Region VI personnel do not consider cement plants to have had major compliance problems.[71]

Water Quality Standards

As in the other states, Texas establishes both narrative and numeric water quality standards. The state has three major categories of water quality designations: (1) contact (e.g., swimming) and noncontact (e.g., boating) recreation; (2) domestic water supply; and (3) five subcategories of aquatic life (i.e., limited quality, intermediate quality, high quality, exceptional quality, and oyster waters).[72] The domestic water supply and aquatic life designations are of special concern to cement facility operators, as both impose limits on concentrations of heavy metals, as well as toxic and chemical materials. In addition, the State has numeric criteria for each classified segment of a given water body.

Ground-Water Protection

A state ground-water protection policy was adopted in 1989 that sets nondegradation of ground-water resources as its goal. The policy recognizes the variability of Texas' aquifers, the importance of maintaining water quality for existing and potential uses, the protection of the environment, and the maintenance and enhancement of the long-term economic health of the state. Discharges of pollutants, disposal of wastes, and other regulated activities must be in a manner that will maintain present uses and not impair potential uses of ground water or pose a public health hazard. The State legislature is currently debating proposals that would require ground-water monitoring for disposal facilities located in the Edwards Aquifer region.

Texas is the only state (of the four states included in this report) to have its Wellhead Protection Program approved by EPA. The Wellhead Protection Program identifies the roles of state and local agencies and attempts to coordinate the state's existing ground water and well water protection legislation. A wellhead protection program attempts to protect ground water surrounding a well or wellfield that supplies a public drinking water system. A wellhead protection program promotes the use of best demonstrated technology to prevent contamination.

---

[71] Everett Spenser, EPA Region VI, Enforcement Branch, September 9, 1993, and Rick Ruddell, Watershed Management Division, and Earnest Heyer, Field Operations Division, Texas Natural Resources Conservation Commission, May 16, 1993.

[72] Tex. Admin. Code tit. 31, § 307.7.

Stormwater Management Requirements

No requirement exists under Texas regulations for the permitting of stormwater discharges. However, cement facilities are subject to the numeric limitations for run-off from materials storage piles found in the federal effluent limitations. These numeric limitations are incorporated as baseline requirements in the Texas Industrial Discharge permit and the federal NPDES permit.

As Texas does not have NPDES authority, EPA will administer the new stormwater requirements, including the issuance of general permits. However, EPA must incorporate the Texas hazardous metal effluent limitations (e.g., for cadmium, lead) as part of any stormwater permit, to comply with Texas water quality standards.[73]

7.3 SOLID WASTE MANAGEMENT

Three general approaches are used in managing CKD at cement plants: recycling, beneficial use, and land management. While the least wasteful method for managing CKD would be to recycle it to the raw feed, excessive alkali content in the dust limits the amount of CKD that can be directly recycled without upsetting the proper functioning of the kiln (see Chapter 3, Section 3.1.1). When recycling can not be used to manage all CKD, the CKD may be disposed or stockpiled on site in waste management units or sold off site for beneficial use. Beneficial uses of CKD include applications as soil amendments, material additives, liming agents, road sub-bases, or waste stabilization agents. Various solid waste management requirements exist for disposal and stockpiling of CKD. In addition, some states require a permit before allowing off-site beneficial uses of CKD.

Under federal law, the Bevill Amendment (Section 3001 of RCRA) temporarily excludes CKD from regulation as a hazardous waste under Subtitle C of RCRA, pending study. While temporarily excluding CKD from regulation as a hazardous waste, the Bevill Amendment did not preclude CKD regulation under other provisions of federal or state law. Currently, CKD is subject to federal criteria as a non-hazardous solid waste under Subtitle D of RCRA. In addition, CERCLA provides the federal government with the authority and resources to respond to situations in which CKD wastes are or may be released into the environment such that they pose an imminent and substantial danger.

Because nothing prevents states from imposing more stringent hazardous waste requirements, states (such as California) may, and in some cases do, characterize CKD as a hazardous waste. Pennsylvania, on the other hand, classifies CKD as a residual waste. Pennsylvania regulates CKD less stringently than if CKD was considered a hazardous waste but still requires comprehensive waste management practices. Michigan and Texas characterize CKD as an industrial, non-hazardous solid waste and subject CKD to management requirements that vary from those of the other states.

---

[73] 57 Fed. Reg. 41236.

7.3.1 Federal Controls

The Resource Conservation and Recovery Act

The Resource Conservation and Recovery Act of 1976 (RCRA), as amended, is the primary statute governing the management of solid and hazardous waste.[74] The principle objectives of RCRA are to:

- Promote the protection of human health and the environment from potential adverse effects of improper solid and hazardous waste management;
- Conserve material and energy resources through source reduction and waste recycling;
- Reduce or eliminate the generation of hazardous waste as expeditiously as possible; and
- Improve solid waste management practices.

Special requirements for hazardous wastes are found in Subtitle C of RCRA. Subtitle C provides a statutory framework for tracking all hazardous and toxic wastes from "cradle to grave," that is, from their generation to their final disposal, destruction, or recycling.

Under Section 3006 of RCRA, EPA may authorize states to administer and enforce a state hazardous waste program in lieu of the federal Subtitle C program. In order to receive authorization, a state's program must contain hazardous waste management regulations at least as stringent as federal Subtitle C standards. A state's enforcement provisions must also provide at least equivalent penalties to those required in RCRA and enforcement activities performed by EPA. EPA has approved the state-level programs for implementing the Subtitle C hazardous waste management system of all four of the states analyzed in this report.

Pursuant to regulations issued by EPA (40 CFR Part 261), solid wastes that meet EPA hazardous waste criteria with respect to "toxicity, persistence, degradability in nature, potential for accumulation in tissue, and other related factors such as flammability, corrosiveness. . ." are subject to RCRA's Subtitle C requirements. Generators of these wastes are generally required to comply with labeling, storage, transportation, and disposal requirements.

In 1980, however, Congress enacted the Bevill Amendment, which temporarily exempted certain categories of high volume solid wastes (including CKD) from regulation as a hazardous waste under Subtitle C of RCRA, pending study and a Regulatory Determination. While temporarily excluding CKD from regulation as a hazardous waste, the Bevill amendment did not exempt CKD from regulation under other provisions of federal or state law. Currently, CKD is subject to regulation as a non-hazardous solid waste (hereafter referred to as solid waste) under Subtitle D of RCRA.[75] Subtitle D established a cooperative framework for federal, state, and local governments to control the management of solid waste. The actual planning and implementation of solid waste programs are state and local functions.

---

[74] 42 U.S.C. §§ 6901 to 6992K.

[75] 42 U.S.C. §§ 6942 - 6949a.

The broad definition of solid waste in the federal regulations includes industrial waste such as CKD. "Solid waste" is defined as "any garbage, refuse, sludge from a waste treatment plant, water supply treatment plant, or air pollution control facility and other discarded material, including solid, liquid, semisolid, or contained gaseous material resulting from industrial, commercial, mining, and agricultural operations . . . "[76] According to RCRA, all solid wastes must be disposed in compliance with EPA's criteria.[77] A facility that meets the criteria is classified as a sanitary landfill.[78] A facility that fails to meet the criteria is classified as an open dump; disposal of solid waste in open dumps is prohibited.

EPA cannot take action against a person disposing of non-hazardous wastes in an open dump or against a state for failing to close open dumps, other than terminating certain grant funds available to a state under RCRA. No statutory authority exists to enforce or adopt a federal Subtitle D program in lieu of a state's program. However, EPA may respond to a waste management situation that presents "an imminent and substantial endangerment to health or the environment" under the authority of Section 7003 of RCRA.[79] Actions sanctioned by Section 7003 include injunctions to order a violator to stop the activity, as well as administrative orders requiring cleanup to protect public health and the environment.

Boiler and Industrial Furnace Rule

The Boiler and Industrial Furnace (BIF) Rule also directly affects the regulatory status of CKD generated by cement kilns burning hazardous waste as fuel.[80] Under the normal operation of RCRA Subtitle C, any remaining solid residue derived from the burning or processing of listed hazardous waste is itself a listed hazardous waste (40 CFR 261.3(c)(2)(i)). However, Bevill Amendment status of CKD is not automatically lost if hazardous waste is burned at a cement kiln. EPA amended the Bevill exclusion for CKD to specify that such "co-combustion residues" may retain their excluded status on a case-by-case basis. Cement kilns must process at least 50 percent by weight normal cement production raw materials to qualify. In addition, the owner or operator must demonstrate that the hazardous waste does not significantly affect the residue by meeting either of two alternate criteria: the toxic constituents in the waste-derived residue must not be significantly higher than the levels of such constituents in normal residue or exceed specified health-based limits. As part of the process of developing its Regulatory Determination, EPA may make modifications to the positions outlined in the BIF rule. [Note to reader: EPA recently granted a stay to the two-part test.

As part of the enforcement actions against cement kilns for violations of BIF regulations, discussed in the air pollution control section above (Section 7.1.1), EPA is seeking penalties from four facilities for BIF rule violations relating to CKD. EPA has alleged that three facilities failed

---

[76] 40 CFR § 257.2.

[77] 42 U.S.C. § 6944.

[78] On October 9, 1991, EPA revised the minimum criteria for municipal solid waste landfills. 56 Fed. Reg. 51016. As a result of EPA's concern about industrial waste, EPA is considering a second phase of criteria revisions that would address industrial solid waste management facilities and practices. This second phase of criteria revisions could affect the management of CKD.

[79] 42 U.S.C. § 6973.

[80] 56 Fed. Reg. 7134 (Feb. 21, 1991).

to perform adequate testing of CKD to determine if it should be characterized as hazardous waste. EPA alleges that the other facility stored hazardous CKD without a permit.

Comprehensive Environmental Response, Compensation, and Liability Act

Run-off, leachate, and other air and water emissions from CKD can be subject to the regulatory and liability provisions of the Comprehensive Environmental Response, Compensation, and Liability Act (CERCLA, or Superfund). Superfund provides the federal government with the authority and resources to respond to situations in which pollutants or contaminants are or may be released into the environment such that they pose an "imminent and substantial danger to the public health or welfare...."[81]

CERCLA authorizes EPA to respond to immediate threats to the environment or human health in situations in which a responsible party cannot act or cannot be readily identified. In such situations, EPA can proceed with necessary containment or removal actions. Where conditions allow, the Agency can also undertake more detailed remedial actions. Section 106 provides authority for administrative orders necessary to protect public health and the environment.

In those situations in which responsible parties that can respond "properly and promptly" can be identified, EPA is authorized to establish what remedial actions are required and to oversee the responsible parties' cleanup efforts. In all cases, the owners and/or other responsible parties are liable for the costs of cleaning up the hazardous waste problem, and for correcting damages to natural resources. Two cement kiln facilities are currently listed on the NPL and are discussed in detail in the Damage Case Evaluation (Chapter 5), above. These two NPL sites are as follows:

- Holnam Incorporated, Mason City, Iowa; and
- Portland Cement Company, Salt Lake City, Utah.[82]

7.3.2 State Controls

In the area of solid waste, significant differences in CKD management exist between the states, specifically with respect to how states characterize CKD waste. California characterizes CKD as a hazardous waste. Pennsylvania, on the other hand, classifies CKD as a residual waste, regulating CKD less stringently than if it was considered a hazardous waste, but still requiring comprehensive waste management practices. Michigan and Texas characterize CKD as an industrial, non-hazardous solid waste and therefore, subject CKD to fewer management requirements than either California or Pennsylvania. A summary of the four states' solid waste management controls can be found in Exhibit 7-4, and a discussion of individual state's solid waste management requirements follows.

---

[81] 42 U.S.C. § 9604.

[82] A third site, Lehigh Portland Cement Company's Mason City, Iowa, plant was placed on the NPL on August 30, 1990. In litigation, Lehigh identified a number of concerns regarding the hazard ranking score. After reviewing the issues regarding the calculation of the score on the hazard ranking system, the Agency decided not to contest Lehigh's challenge to the listing decision. The listing was vacated by mutual consent in October, 1992. Removal of Lehigh's Mason City site from the NPL does not affect clean-up at the site. For further discussion of this site, see Section 5: Documented and Potential Damages from Management of CKD.

Exhibit 7-4

Summary of State Solid Waste Management Controls

States	California	Michigan	Pennsylvania	Texas
CKD Classification	Hazardous waste; moratorium on enforcement	Industrial solid waste	Residual waste	Industrial solid waste
Permit required	Yes; design standards, siting restrictions, and operating requirements	Yes; design standards, siting restrictions, and operating requirements	Yes; design standards, siting restrictions, and operating requirements	No*; notification to State of waste management activities
Ground-Water Monitoring	Monitoring system designed to provide best assurance of earliest possible detection of a release from facility	Monitoring system to evaluate ground water at the solid waste facility boundary; number and location of wells will vary depending on hydrogeological study	Sufficient number of monitoring wells to be representative of water quality (at least one upgradient and three downgradient wells)	Technical guidelines on ground-water monitoring systems, but monitoring not required
Reporting Requirements	Permit will include frequency of reporting of ground-water sampling results; annual hazardous waste report	Quarterly ground-water sampling results	Quarterly and annual reporting of sampling results; biennial residual waste report and source reduction plan	Notification to State of waste classification and waste management activities
Beneficial Use Approvals Required	No	Sometimes; for uses that could be considered disposal and do not involve a licensed waste management facility (e.g., use as fill material)	Yes; general permits may be issued on a regional or state-wide basis for a particular use	No

* On-site management of industrial non-hazardous waste does not require a permit. CKD transported off site must be managed in a permitted facility.

California

In addition to assigning responsibilities to the California Water Resources Control Board and the regional water resource control boards to regulate water discharges, the Porter-Cologne Act gives the boards specific authority to regulate discharges of waste to land.[83] The boards also have the authority to manage landfills and waste piles. This aspect of the California water pollution control law complements the state's Hazardous Waste Control Law. Under the Hazardous Waste Control Law, the Department of Toxic Substances Control (Department) manages California's hazardous waste program. The California Water Resources Control Board and the California Environmental Protection Agency's Department of Toxic Substances Control are presently revising their regulations to make them more consistent.

Currently, CKD is considered a non-RCRA hazardous waste under California's Hazardous Waste Control Act but may be reclassified as a "special waste." California defines a

[83] Cal. Water Code §§ 13172, 13226-13227.

"special waste" as "a waste which is a hazardous waste only because it contains an inorganic substance or substances which cause it to pose a chronic toxicity hazard to human health or the environment ..."[84] The waste must meet all of the criteria and requirements of a special waste as specified in Sections 66261.122 and 66261.124 of the state's hazardous waste regulations; for example, the waste must not exhibit the characteristics of corrosivity, ignitability, reactivity, or toxicity (presumably, "acute" toxicity), as defined by the state.[85] The hazardous waste management regulations specifically list CKD as a waste that may be classified as a special waste.[86]

For CKD to be classified as a special waste, the owner or operator of a cement plant must submit an application to the Department. The application must contain the following information:

- Address where the waste is generated;
- Description of the waste that includes its source, physical state, quantity, and rate of generation; and
- Chemical analysis data.[87]

A representative CKD sample can be used in the chemical analysis because the plant continuously uses the same kinds of raw materials with respect to their origin, composition, and properties.

Upon written approval by the Department, a cement plant operator may manage CKD as a special waste, allowing it to be disposed in a landfill that is not permitted or operated under the more stringent hazardous waste requirements. As a special waste, the landfill does not have to comply with the hazardous waste facility design, closure and post-closure care, and financial assurance requirements.[88] However, the waste management facility must comply with any waste discharge requirements issued by the regional water quality control board.[89] The owner or operator of a facility also must have been granted a variance that allows for the disposal of special wastes. Unless specifically waived by a variance, the owner or operator of a waste management facility that accepts special waste is subject to the hazardous waste enforcement, manifesting, and reporting requirements.[90]

---

[84] Cal. Admin Code tit. 22, § 66260.10 (also referred to as the California Code of Regulations).

[85] A solid waste considered hazardous under California's more stringent corrosivity or toxicity characteristics definition might not be considered a hazardous waste under the federal RCRA Subtitle C hazardous waste characteristics definition.

[86] Cal. Admin. Code tit. 22, § 66261.120.

[87] Cal. Admin. Code tit. 22, § 66261.124.

[88] Cal. Admin. Code tit. 22, § 66261.126(a).

[89] As stated above, in addition to regulating water discharges, regional water quality control boards are authorized to regulate discharges of waste to land. Cal. Water Code §§ 13172, 13226-13227.

[90] Cal. Admin. Code tit. 22, § 66261.126(c).

Even if a cement plant's CKD was to be classified as a special waste, the owner or operator of the plant is subject to all of the requirements that apply to a generator of hazardous waste.[91] As a generator of hazardous waste, the owner or operator must analyze the CKD and obtain an identification number. Manifesting and other reporting requirements also apply, as do requirements and limitations for storing hazardous waste. Owners or operators may, however, obtain a variance from any or all of these requirements. In practice, because the state has never enforced the management of CKD as a hazardous waste, the majority of cement plants in California have not applied to reclassify their CKD as a special waste, nor do they manage it as a hazardous waste.[92] Only one cement plant began the process of having CKD reclassified as a special waste, but it never provided the Department with all of the required studies.[93] Therefore, the Department has never made a determination on whether CKD could be reclassified as a special waste.

In response to potential CKD enforcement concerns, the Governor of California signed a bill in October 1992 that places a one year moratorium on the enforcement of hazardous waste requirements for CKD that fails the California hazardous waste corrosivity characterization test.[94] This bill, effective January 1, 1993, and extending through January 1, 1994, authorizes a study on the health-based effects of CKD with funding by the California Cement Manufacturers Association. This study is subject to review by a committee consisting of California EPA, the Department of Toxic Substances Control, the State Water Resources Control Board, the California Cement Manufacturers Association, and an environmental organization. The study will analyze whether the hazardous waste corrosivity criteria, including testing protocols, should be applied to CKD. Due to procurement problems, this study remains at the bid stage and the California Cement Manufacturers Association will be asking the legislature for a one-year extension on the moratorium so the study can be completed.[95]

The moratorium only provides a temporary exemption from the enforcement of hazardous waste management requirements for CKD that fails the California hazardous waste corrosivity characterization test. One cement plant also failed California's hazardous waste characterization test because of the presence of lead in the CKD.[96] The Department, however, issued a letter in 1985 stating that the cement plant operator could treat the CKD as a non-hazardous waste because the lead had little potential to leach out of the CKD. Under this variance, the plant operator must wet the CKD and allow it to solidify prior to managing it in waste piles. The waste piles do not have liners or concrete pads. Ground-water monitoring wells

---

[91] Cal. Admin. Code tit. 22, § 66261.126(d).

[92] Personal communication with Chris Marxen, California Environmental Protection Agency, Department of Toxic Substances, Waste Evaluation Unit, and Fred Fontus, California Environmental Protection Agency, Department of Toxic Substances, Surveillance and Enforcement, September 10, 1993.

[93] Letter from Stanford Lau, Toxic Substances Control Division, to Ralph Mitchell, Lone Star Industries, Inc., July 20, 1988.

[94] Assembly Bill 3789, Cal. Health and Safety Code § 25141.1.

[95] Personal communication with Chris Marxen, California Environmental Protection Agency, Department of Toxic Substances, Waste Evaluation Unit, September 10, 1993.

[96] Personal communication with Fred Fontus, California Environmental Protection Agency, Department of Toxic Substances, September, 10, 1993.

near the waste piles consistently demonstrate no ground-water contamination has occurred from lead leaching from the CKD.

Recently, a weekly sample from newly-generated CKD at this cement plant demonstrated elevated lead levels. The plant immediately notified the Department. The plant segregated this CKD and will manage this batch of CKD as a hazardous waste.

The moratorium does not affect inspections or enforcement of other environmental requirements such as ground-water protection. Cement plants continue to be inspected annually.

Michigan

The Michigan Solid Waste Management Act authorizes the Michigan Department of Natural Resources (DNR) to manage industrial solid waste and hazardous waste disposal.[97] "Solid waste" is defined broadly to include "garbage, rubbish, ashes, incinerator ash, incinerator residue, street cleanings, municipal and industrial sludges, and solid commercial and solid industrial waste . . ."[98] CKD is considered a solid industrial waste under this definition, and is not characterized as a hazardous waste under Michigan regulations. CKD is considered a Type II solid waste.[99] DNR has become concerned about the potential environmental impact of past disposal of CKD in quarries and is studying CKD disposal practices at the three currently-operating cement plants.[100] DNR has discovered some ground-water contamination downgradient from CKD piles, but has no proof that the contamination originates from the CKD and is not the result of natural leachate from bedrock fractures. This situation continues to be monitored.

If the owner or operator wants to manage CKD on site, a construction permit and operating permit for landfills are required. The permitting process requires a separate license to operate a facility. The license application must be accompanied by an engineer's certification that construction was completed in accordance with the previously approved plans. A bond to cover the costs of closure and post-closure monitoring is also required. With regard to post-closure land use, the Department is in the

> The construction permit application is to be accompanied by the following:
>
> - A hydrogeological report and monitoring program;
> - Engineering plans; and
> - An environmental assessment.

[97] Mich. Comp. Laws §§ 401-436.

[98] Mich. Comp. Laws § 299.407.

[99] Wastes listed as hazardous or that demonstrate hazardous characteristics are classified as Type I wastes. Type III wastes are inert and essentially insoluble (e.g., demolition debris, rock, or dirt). Type II wastes are all the wastes that cannot be considered Type I or Type III and include garbage and rubbish. See Letter from Mindy Koch, Acting Chief, Waste Management Division, Department of Natural Resources, to Myron Black, LaFarge Corporation, dated September 27, 1991.

[100] Personal communication with Brad Venman, Michigan Department of Natural Resources, Waste Management Division, October 9, 1992. Currently, the cement plant located in Wayne County only grinds clinker delivered from Canadian cement plants. The kiln which was permitted to burn hazardous waste for fuel was shut down for economic reasons.

process of reviewing a cement facility's closure plan to turn a limestone quarry containing CKD into an inland lake or marina.[101]

Another option is to have CKD receive a "designation of inertness" from DNR.[102] This designation would exempt CKD from most solid waste management requirements (e.g., construction or operating permits). To be classified as inert material, the CKD must meet Toxicity Characteristic Leaching Procedure (TCLP) concentration limits. If the designation of inertness is approved for CKD, the owner or operator of the cement plant would be required to characterize the CKD a minimum of once per year. One facility failed this test because the leachable concentration of lead was too high.[103]

At another cement plant, DNR outlined three options for future CKD disposal: 1) transport the CKD to an off-site facility licensed to manage Type II wastes; 2) develop an on-site facility that is permitted and licensed; or 3) obtain a "designation of inertness" from DNR for the continued disposal of CKD in the on-site quarry.[104] If CKD is to be transported off site for disposal, the disposal must be consistent with county solid waste management plans.

DNR only requires beneficial use permits for certain uses. For example, no beneficial use approval is necessary when CKD is used to solidify liquid hazardous wastes because controls and reporting requirements exist and are the responsibility of the liquid hazardous waste management facility. Similarly, CKD used to solidify drilling muds and cuttings from oil and gas exploration activities or tank bottoms from oil and gas production facilities would not need to be permitted because the solidified wastes would be taken to a licensed landfill. DNR is more concerned about how CKD is ultimately disposed. Therefore, approval and reporting requirements would apply if the beneficial use of CKD involved activities such as river bank stabilization or restoration projects that would use CKD as fill. Historically, CKD has been used as fill along the Detroit River. Today, this type of use would receive close scrutiny.

Pennsylvania

Unlike California and Michigan, CKD is classified by Pennsylvania as a residual waste. The Pennsylvania Department of Environmental Resources (DER) defines "residual waste" as "[g]arbage, refuse, other discarded material or other waste including solid, liquid, semisolid, or contained gaseous materials resulting from industrial, mining and agricultural operations . . . if it is not hazardous."[105] Pennsylvania's definition of residual waste is similar to Michigan's definition of industrial waste.

---

[101] Personal communication with Brad Venman, Department of Natural Resources, Waste Management Division, October 9, 1992.

[102] Mich. Comp. Laws § 299.408(3), Mich. Admin. Code §§ 299.4102(h) (viii) and 299.4301(3).

[103] Letter from Mindy Koch, Acting Chief, Waste Management Division, Department of Natural Resources, to Myron Black, LaFarge Corporation, dated September 27, 1991.

[104] Ibid.

[105] 25 Pa. Code § 287.1.

The six regional DER offices conduct inspections; inspections based on the new residual waste regulations are pending.[106] Due to limited resources, inspections of hazardous waste management facilities and municipal waste management facilities are a higher priority than residual waste management inspections. The regulations explicitly state that DER does not have a duty to conduct a minimum number of inspections per year at a facility.[107] While no minimum number of inspections is required, the regulations recommend that DER conduct 12 inspections per year for each residual waste landfill. DER may conduct as many inspections as necessary for public health or safety reasons.

Currently, DER residual waste management enforcement is concentrating its efforts on obtaining compliance with notification requirements. These requirements mandate that residual waste generators provide to DER by March 1, 1993, basic information about their waste and its management. Approximately 67 percent of residual waste generators submitted the required report.[108]

In a manner similar to that of the other states, DER has administrative, civil, and criminal enforcement authority, including the authority to levy penalties.[109] The residual waste management regulations establish specific violations for which a civil penalty should be assessed (e.g., acceptance of waste not approved under a permit), but do not restrict DER from assessing penalties for violations not explicitly set forth.[110] These regulations also establish factors for determining penalty amounts (e.g., willfulness of violation). For most cases of noncompliance, DER plans to send a notice of violation and arrange for a meeting to discuss the violations,[111] at which a date will be established by which the violations must be abated. If the violations are not corrected, DER may seek consent orders, civil penalties, and in extreme situations, criminal penalties.

As a residual waste, CKD is regulated less stringently than it would be if classified as a hazardous waste, but is still subject to comprehensive waste management controls. Cement facilities are subject to the residual waste management requirements in Pennsylvania's Solid Waste Management Act and the new Residual Waste Management Regulations.[112] These new regulations, adopted in July 1992, reflect the increasing complexity of industrial waste management and afford greater protection of the State's ground water. These new regulations expand residual waste management requirements and replace older residual waste standards.

---

[106] Personal communication with Reno Vacheski, Pennsylvania Department of Environmental Resources, Region II, Waste Management Bureau, September 10, 1993.

[107] 25 Pa. Code § 287.421.

[108] Personal communication with Sam Sloan, Pennsylvania Department of Environmental Resources, Bureau of Waste Management, Division of Municipal and Residual Waste, September 10, 1993.

[109] Penn. Stat. §§ 6018.602-6018.606.

[110] 25 Pa. Code § 287.411.

[111] Personal communication with Reno Vacheski, Pennsylvania Department of Environmental Resources, Region II, Waste Management Bureau, September 10, 1993.

[112] 35 Penn. Stat. Ann. § 6018.102 and 25 Pa. Code § 287.

Cement plants that manage CKD are required to obtain a Residual Waste Processing and/or Disposal Permit.[113] This permit attempts to balance state-of-the-art environmental protection methods and the risks presented by particular wastes at a facility. This permitting process requires the following elements:

- Environmental assessment;
- Analysis of the waste(s);
- Source reduction strategy; and
- Plan for ongoing analysis of the waste(s).[114]

In establishing disposal requirements for a specific facility, a waste classification system is used to determine landfill design standards. A leaching analysis based on EPA's methods compares the amount of contaminants in the waste's leachate to ground-water parameters; this analysis determines the appropriate landfill design class.

Depending on the results of the leach tests, CKD may be placed in one of three different types of landfills with various liner and other requirements (e.g., Class I landfills must comply with more stringent liner, siting, and operating standards than either Class II or Class III landfills). Under the industrial waste regulations, a waste that leaches more than 50 times the ground-water parameter for any of the contaminants it contains would be required to be disposed of in a Class I landfill. If the contaminants are greater than 25 times the ground-water parameters for metals and other cations, or more than 10 times the ground-water parameters for other contaminants, the CKD would be required to be disposed of in a Class II landfill. Other wastes, in general, could be disposed of in a Class III landfill.

A ground water parameter is one of the following:

- the maximum contaminant level goal (MCLG) under the Federal Safe Drinking Water Act;
- the primary or secondary maximum contaminant level (MCL); or
- for other contaminants, concentrations derived from the U.S. EPA's Integrated Risk Information System (IRIS).

The residual waste regulations require permits that include provisions for liners, leachate collection systems, monitoring wells, and disposal of leachate. Though similar to the federal Subtitle D criteria with regard to prohibitions on where facilities may be located (e.g., within the 100-year floodplain) the residual waste regulations are more stringent. Residual waste permits will be issued for up to 10 years, but DER must review these permits every five years. Facilities without permits must document planned closure procedures within a certain time frame.

Under the residual waste regulations, a cement facility must develop a source reduction strategy and update that plan every five years. The strategy must contain the following elements:

- the methods and procedures that will be used to achieve a reduction in the weight or toxicity of waste generated on the premises;

[113] 25 Pa. Code § 287.101.

[114] 25 Pa. Code §§ 287.121-287.134.

- the magnitude of the projected reduction; and
- a timetable for when the reductions will occur.

Every two years, a cement facility must file a report describing the types of waste generated, where the wastes are processed or disposed, and the facility's efforts to implement its source reduction plan. The report is intended to provide baseline data about industrial waste generation and source reduction in Pennsylvania.

Cement facilities may also be required to obtain a Residual Waste Beneficial Use Approval.[115] This approval is required if a cement plant plans to reuse constituents of residual waste for a particular beneficial purpose. This requirement is currently in effect. Past uses of CKD to make fertilizer and for use in soil stabilization, land reclamation, waste remediation, and sewage sludge dewatering would now be required to obtain DER beneficial use approval. On its own initiative, or at the request of other parties, DER may issue general permits for beneficial use on a regional or Commonwealth-wide basis. The general permit may establish concentration limits for contamination or place restrictions on the use. As of this date, DER has not received and approved any general permit applications or issued on its own initiative a general permit for the beneficial uses of CKD. Those cement plants using CKD for a beneficial purpose need to apply for a permit.

Texas

The Texas Solid Waste Act grants the Texas Natural Resources Conservation Commission jurisdiction over hazardous and industrial waste management.[116] Under new waste classifica-tion regulations finalized in November 1992, owners or operators of a facility must submit a registration form to the Commission that makes a determination of their waste classification and assigns a waste code to their own wastes.

The Commission conducts inspections of all permitted non-hazardous waste management facilities annually.[117] Cement plants that burn hazardous waste for fuel are inspected annually and are permitted RCRA facilities. The majority of cement plants, however, do not burn hazardous waste and manage their CKD on site. These cement plants are exempt from permitting requirements (this permit exemption for facilities managing their CKD on site is discussed in greater detail below) and annual inspections. The Commission will inspect cement plants that are exempt from permitting requirements if there are complaints.

Texas has administrative and civil enforcement authority, including the authority to levy monetary penalties of up to $10,000 per day of violation. Generally, the Commission attempts to issue agreed upon Corrective Action Directives to encourage voluntary compliance and implementation of corrective action in an expedited manner. Administrative orders with penalties for violations are also issued. In situations where the Commission believes that an imminent and substantial endangerment to human health or the environment has occurred, an

---

[115] 25 Pa. Code § 287.611.

[116] Tex. Health and Safety Code § 361.

[117] Personal communication with Earnest Hire, Texas Natural Resources Conservation Commission, Industrial and Hazardous Waste Enforcement Section, September 10, 1993.

order may be issued without the facility's consent to facilitate immediate corrective action. No major enforcement or compliance problems are known to exist at cement plants.[118]

The Texas Solid Waste Management Regulations establish standards for all aspects of the management and control of industrial solid waste; CKD is considered a non-hazardous industrial solid waste. "Industrial solid waste" is defined as any solid waste resulting from or incidental to any process of industry or manufacturing.[119] Non-hazardous industrial solid waste is classified as follows:

- Class 1 wastes that may pose a substantial danger to human health and the environment because of hazardous characteristics;
- Class 2 wastes that are all wastes that cannot be considered Class 1 or Class 3; and
- Class 3 wastes that are inert and essentially insoluble (e.g., rock, bricks, or dirt).

CKD would be considered a Class 1 corrosive waste if it is a semi-solid or solid which, when mixed at a 1:1 ratio with water, produces a solution with a pH less than or equal to 2 or greater than or equal to 12.5. Based on EPA studies, some CKD could be classified as a Class 1 industrial waste under this standard. The cement facility owner or operator would then be required to manage the CKD only in permitted hazardous waste management facilities and would be subject to manifesting and reporting requirements.

Wastes are classified in the most protective manner unless knowledge and/or data demonstrate that a less conservative classification (Class 2 or 3) is applicable. If an owner or operator considers its CKD to be a Class 2 or 3 waste, testing results must verify this position.[120] To be classified as a Class 3 waste, the cement kiln owner or operator must demonstrate that the CKD does not exceed maximum leachable concentrations (based on EPA's Toxicity Characteristic Leaching Procedure (TCLP)), or exceed Primary Drinking Water Standards or the Total Dissolved Solids limit of the secondary standards. To be considered a Class 2 waste, CKD must not fail the corrosivity test described above. Basically, a Class 2 waste is not as totally innocuous and inert as is required for a Class 3 waste, but also does not present the potential threat of a Class 1 waste.

The Industrial Waste Management Regulations exempt non-hazardous industrial waste (Class 2 or 3) disposal facilities from the requirement to obtain a solid waste facility permit if the waste is: 1) disposed on site; 2) the disposal site is located within 50 miles of the plant or operation; and 3) the waste is not "commingled" with waste from another source.[121] Off-site waste management units must be permitted.

---

[118] *Ibid.*

[119] Tex. Admin. Code tit. 31, § 335.1.

[120] Owners or operators must use an approved testing method such as those described in "Test Methods for the Evaluation of Solid Waste, Physical/Chemical Analysis." In addition, the owner or operator must maintain documentation of the sampling procedures. The Commission may review a waste characterization at any time to determine if the waste has been appropriately classified.

[121] Tex. Admin. Code tit. 31, § 335.2(d).

Owners and operators of facilities that are exempt from the permitting requirement must still comply with the following industrial waste management requirements:

- Owners and operators must notify the Commission 90 days prior to the onset of disposal activities;
- Records must be kept of the description of the waste, quantities stored or disposed, and quantities shipped off site;
- The storage or disposal of waste must not cause a nuisance or endanger the public health or welfare; and
- Owners or operators must file a notice in the county deed records of the disposal.

In addition, owners or operators may be required to submit information on waste management methods, facility engineering plans, and the geology of the facility's location. An owner or operator is required to submit details of closure activities only if requested by the Texas Natural Resources Conservation Commission.

The Commission provides technical guidelines to advise owners/operators of on-site waste piles on appropriate liner materials and thickness, closure and post-closure care activities, and site selection criteria, but these guidelines are not requirements that can be enforced. For example, owners or operators are not expressly required to place liners under waste piles or to monitor ground water. In addition, no closure and post-closure care requirements exist for on-site non-hazardous industrial solid waste piles.

CHAPTER SEVEN

EXISTING REGULATORY CONTROLS ON CKD MANAGEMENT

7.0 INTRODUCTION AND METHODS 1

7.0.1 Objectives 1

7.0.2 Methodology 1

7.0.3 Summary of Findings 2

7.0.4 Limitations of the Analysis 4

7.1 AIR 5

7.1.1 Federal Controls 5

Clean Air Act 5

Implementing Regulations 5

State Implementation Plans 5

New Source Performance Standards 6

Prevention of Significant Deterioration 6

Nonattainment Review 7

Hazardous Air Pollutants 7

Boiler and Industrial Furnace Regulations 8

7.1.2 State Controls 9

California 10

Ambient Air Quality Standards 11

Authority To Construct 11

Permit To Operate 12

Prevention of Significant Deterioration and New Source Review 12

Michigan 13

Ambient Air Quality and Permits 13

Particulate Matter and Visible Emissions Limitations 14

Pennsylvania 14

Nonattainment Review 15

Particulate Matter and Visible Emissions Limitations 15

Texas 16

Other Requirements Applicable to Cement Plants 16

Special Report on Texas Cement Plants' Excess Emissions 18

7.2 WATER 18

7.2.1 Federal Controls 18

The Clean Water Act 18

Safe Drinking Water Act 20

7.2.2 State Controls 21

California 22

Process Wastewater Requirements 23

Water Quality Standards 23

Stormwater Management Requirements 24

Michigan 24

Water Quality Standards 25

Ground-Water Protection 25

Pennsylvania 25

Water Quality Standards 26

Ground-Water Protection 26

Stormwater Management Requirements 27

Texas 27

Water Quality Standards 28

Ground-Water Protection 28

Stormwater Management Requirements 29

7.3 SOLID WASTE MANAGEMENT 29

7.3.1 Federal Controls 30

The Resource Conservation and Recovery Act 30

Boiler and Industrial Furnace Rule 31

Comprehensive Environmental Response, Compensation, and Liability Act . . 32

7.3.2 State Controls 32

California 33

Michigan 36

Pennsylvania 38

Texas 40

LIST OF EXHIBITS

Exhibit 7-1 **New Source Performance Standards for Portland Cement Plants** 7

Exhibit 7-2 **Summary of State Air Pollution Controls** 10

Exhibit 7-3 **Summary of State Water Pollution Controls** 21

Exhibit 7-4 **Summary of State Solid Waste Management Controls** 33

CHAPTER EIGHT

ALTERNATIVE CKD MANAGEMENT PRACTICES AND POTENTIAL UTILIZATION

8.0 OVERVIEW

As discussed in Chapter 3, gross CKD is the dust collected at the air pollution control device(s) associated with a kiln system. Gross CKD is generated as an inherent process residue at all cement plants, though the ultimate fate of this material varies by facility. Exhibit 8-1 illustrates the potential management pathways for gross CKD. After collection, gross CKD is either recycled back to the kiln system or removed from the kiln system as net CKD. Although a number of plants recycle all gross CKD back to the kiln system, most plants remove a significant quantity of CKD from the system. On average, 0.20 tons of gross CKD are generated per ton of clinker produced, and 0.07 tons of net CKD are generated for the same amount of clinker (i.e., about 65 percent of gross CKD is recycled and about 35 percent is removed from the kiln).

Exhibit 8-1

Flow Chart of Gross CKD Management Pathways

When CKD is removed from the kiln system, it can be treated for return to the kiln system, beneficially utilized, or disposed. Net CKD represents a loss of resources when it is removed from the manufacturing process and discarded because CKD is essentially derived from the raw feed (which has been quarried, ground, and blended), and, to a lesser extent, the kiln fuel(s). Additionally, the fuel value of the CKD is lost when the dust at elevated temperatures is removed.[1] Lastly, removing CKD from the system imposes handling, transportation, and disposal costs. Hence, the first efficiency goal of the kiln operator should be to remove less CKD from the kiln system when possible. Second, when CKD must be removed from the kiln system, losses to disposal can potentially be minimized by using this material as a resource.

This chapter discusses the technologies that are available and under development to minimize the quantity of CKD that must be removed from the kiln system and alternative management practices and potential uses for the net CKD that is generated.

8.1 MINIMIZATION OF CKD REMOVAL FROM THE KILN SYSTEM

Conceptually, three general approaches can be used to minimize the removal of CKD from the kiln system:

- Control of CKD generation rates;
- Direct return of CKD to the kiln; and
- Treatment and return of CKD to the kiln.

The first approach involves process controls to minimize dust generation. The other two approaches address methods for returning dust to the kiln system once it is generated and collected. These approaches are discussed below in more detail.

8.1.1 Control of CKD Generation Rates

One approach to minimizing the quantity of net CKD is to generate less gross CKD. Based on the limited information available on this topic, however, there appear to be few practical modifications that can significantly decrease the amount of CKD generated by a given kiln. Nonetheless, there are three primary factors that can influence the gross CKD generation rate within a kiln system. First, dust generation can be minimized by reducing gas turbulence in the kiln and avoiding excessive flow velocities. This practice is, to EPA's knowledge, being implemented to the extent possible as a basic process efficiency parameter. Second, the use of chains near the cool end of the kiln helps to trap CKD before it is entrained into the kiln exhaust.[2] Most kilns are equipped with such cool-end chain sections. Third, the ash content of fuels can vary, yielding differing amounts of particles that become a part of the CKD. For example, liquid hazardous wastes will tend to have a lower ash content than coal.[3] This issue is not likely to drive fuel usage decisions at a kiln.

---

[1] Based on EPA's sampling study, CKD was removed from the kiln system at a typical temperature exceeding 93 °C (200 °F).

[2] Peray, K.E., 1986. *The Rotary Cement Kiln*. Chemical Publishing Co., Inc. New York, New York. p. 108.

[3] Gossman, D., 1992. *The Reuse of Petroleum and Petroleum Waste in Cement Kilns*. Environmental Progress. Volume 11, Number 1. February. pp. 1-6.

The amount or percentage by which gross CKD generation can be reduced by any of these factors is not reported in the available literature. Based on the information reviewed, a process-oriented approach to minimizing CKD generation rates appears to have a limited potential impact in comparison to other approaches, such as increased recycling.

8.1.2 Direct Return of CKD to the Kiln

When gross CKD is generated, minimizing its removal from the kiln system involves recycling gross CKD from its collection point(s) to some part of the manufacturing process. According to the 1991 PCA Survey responses, kiln operators recycled 52 percent of the gross CKD generated in 1990. For each kiln, however, the amount of dust that can be returned to the kiln depends upon (1) the content of minor elements (alkalies[4], sulfur, and chlorine) in the dust; (2) the technology used to recycle the dust; and (3) the type of cement being produced. In addition, the type of kiln system (wet, dry, or preheater/precalciner) will influence the type of return system that can be employed.

Direct return of CKD to the kiln is the simplest recycling practice. Some operators may opt for removal and disposal of CKD rather than installing return systems or monitoring quality. Product specifications and local market demands dictate clinker alkali levels, and thus can influence the quality of CKD that can be returned to the kiln system. Because clinker quality can be reduced by the presence of alkalies and other constituents, in some cement markets, only CKD that is within specified limits for these components can be directly returned to the kiln system in significant amounts. In electrostatic precipitators (ESPs), CKD of acceptable quality is generally only obtained from the initial ESP stages, while the CKD from the later ESP stages is not of sufficient quality for direct return to the kiln because of higher alkali metal content.

As mentioned previously, the major factor limiting the direct recycling of dust to the manufacturing process is its alkali level. The American Society for Testing and Materials (ASTM) specifies a limit of 0.6 percent alkali in portland cement;[5,6] cement with higher alkali content is considered an inferior product and is not suitable for all uses because the alkalies can react with some concrete aggregates and cause the concrete to crack.[7] Similarly, chlorine can react with alkalies to form alkali chlorides, which can also result in structurally-defective concrete. Sulfur, in the form of sulfate, can reduce the structural quality of concrete as well.[8,9] Quality specifications for a given product, which depend upon cement type and local market conditions, will dictate these constituent concentrations in the clinker.

---

[4] Alkalis refer to the alkali metals in group IA of the periodic table of the elements, including lithium, sodium, potassium, rubidium, cesium, and francium. These are light, highly reactive metals. Of primary concern to cement producers are sodium and potassium.

[5] Wilson, R.D. and W.E. Anable, 1986. *Removal of Alkalies From Portland CKD.* U.S. Department of Interior, Bureau of Mines Report of Investigations Number 9032. p. 2.

[6] Kosmatka and Panarese, 1990. *Design and Control of Concrete Mixtures.* 13th Ed. Portland Cement Association, Skokie, Illinois. pp. 15-16.

[7] Davis, T.A., *et al.*, 1975. *Disposal and Utilization of Waste Kiln Dust From Cement Industry.* Southern Research Institute. May. p. 17.

[8] Kosmatka and Panarese, 1990, *op. cit.*

[9] Mehta, P.K., 1986. *Concrete: Structure, Properties, and Materials*, Prentice Hall, Englewood Cliffs, NJ.

As discussed in Chapter 3, the input materials used to produce cement (raw feed and fuel) influence the chemical composition of the CKD generated. At facilities where a significant quantity of CKD is removed from the system, the use of alternative input materials might improve CKD characteristics so that a larger portion of CKD could be directly returned to the kiln. However, given the weights of these alternative input materials it may be impractical to substitute materials because of high transportation costs.

Fuel inputs can significantly influence CKD chemical characteristics. For example, burning low-sulfur coal instead of less expensive coal that is high in sulfur can yield a reduction in CKD sulfur levels. Similarly, using hazardous waste as fuel can affect CKD alkali levels.[10] Chapter 3 presents data showing that kilns burning hazardous waste recycle less CKD than kilns not burning hazardous waste. This practice is also suggested in the literature. In one study, burning hazardous wastes containing chlorine reportedly resulted in reduced recycling rates. In this study, normal coal-fired operations at a dry kiln yielded 90 metric tons (100 tons) of net CKD per month for disposal. However, when hazardous waste was co-fired, this figure increased to 1,800 metric tons (2,000 tons) per month to limit chloride levels in the system.[11]

Raw feeds also influence CKD quality and recycling rates. The greatest raw feed limitation for the industry appears to be excessive alkali levels in the limestone feedstock. Unlike fuels, which are generally the only major inputs that are transported to a kiln from off-site, limestone feed materials, which account for about 85 percent of the raw material consumption, are almost always quarried on site. Because transportation costs can be prohibitive, the viable options for alternative limestone raw feed inputs are limited for most facilities. Some facilities may, however, find it possible to substitute raw materials, such as sand, shale, or clay. For example, the Calaveras Cement Company facility in Tehachapi, California substitutes the locally-available sand with low-alkali sand (sweet sand), which they purchase from an off-site source. This low-alkali sand balances the high-alkali content of the limestone the facility quarries, thereby enabling the facility to recycle 100 percent of the generated CKD.

Finally, process type appears to affect CKD recycling rates. Chapter 3 demonstrated how, relative to units of clinker product, wet kilns recycle less CKD than dry long kilns, and dry long kilns recycle less CKD than preheater or preheater/precalciner kilns. (The reasons for these differences are not fully understood and analyses are continuing.)

After collection in air pollution control devices and removal of unacceptable CKD, the acceptable portion of the CKD is conveyed back to the kiln system. CKD conveyance mechanisms vary between facilities, but generally consist of augers, belts, positive pressure air conveyors, and negative pressure air conveyors. CKD can be returned to the kiln system at three general locations: CKD can be introduced at the flame (hot) end of the kiln, at the middle of the kiln, or at the raw input (cool) end of the kiln (including blending and storage with the raw mix before reaching the kiln). The equipment needed to return CKD to the kiln system can be expensive, but these costs can be outweighed by the resulting savings on avoided resource losses and CKD management costs.[12] Return system installation costs can also fall within reasonable

---

[10] Gossman, D., 1992, *op. cit.*

[11] Engineering Science, 1987. *Background Information Document For The Development of Regulations To Control The Burning of Hazardous Wastes In Boilers and Industrial Furnaces. Vol. II: Industrial Furnaces.* January. pp. 4-18.

[12] Personal communication with Hans Steuch, Director of Engineering, Ash Grove West, December 9, 1992.

limits. For example, an Ash Grove Cement Company facility invested $100,000 to install a system to return to the hot end of the kiln the 50 to 90 metric tons of CKD per day that had previously been wasted.[13]

Return to Flame End

Insufflation involves the introduction of unaggregated CKD into the hot end of the kiln. Dust is injected through or near the burner pipe into the kiln, where the CKD very rapidly reaches reaction temperature. In general, the amount of dust returned through insufflation represents about 15 percent of kiln feed. Although this return method is common, two primary limitations exist. First, the amount of dust at a given kiln that can be returned through insufflation is limited by the reduced flame temperature that it causes in the burning zone.[14] A second disadvantage of insufflation is the continuous resuspension of dust that it causes. This results in a recirculating dust load that requires additional energy for CKD collection and reheating.[15]

Return to Mid-Kiln

CKD can also be conveyed to a shroud in the middle of the kiln near the material inlet to the calcining zone. Mid-kiln return of the dust is expensive, however, because the kiln must be cut to accommodate the shroud.[16] Scoops mounted on the kiln at this location pick up the dust and drop it into the kiln through openings in the shell. Scoops tend to allow fugitive emissions of dust because of sealing problems between the shroud and the kiln. Use of mid-kiln scoops is not a common dust return method.[17]

Return with Raw Feed

CKD can be returned to the kiln system at the input end (also referred to as the exhaust, or cool end) by combining it with the raw feed. The return process differs between dry and wet kilns. In dry process kilns, the dust is conveyed to kiln feed silos or returned directly to the kiln feed system where it is blended with the raw feed to obtain a uniform mix. In wet process kilns, CKD must be returned in a different manner to avoid hardening and thickening of the feed slurry. There are several solutions to this problem:

- Dry CKD can be added to the feed slurry where the slurry enters the kiln;
- A separate CKD slurry can be formed and pumped directly into the kiln; or

---

[13] *Ibid.*

[14] Steuch, Hans E., 1992. *Review of Dust Return Systems.* Paper presented at the Portland Cement Association Seminar on Emerging Technologies for Kiln Dust Management. March 4. Chicago, Illinois. p. 2.

[15] Davis, T.A., *et al.*, 1975, *op. cit.*

[16] Davis, T.A., *et al.*, 1975, *op. cit.*

[17] Steuch, H.E., 1992, *op. cit.*

- Chemical additives, such as molasses or lignosulfates, can be added to retard the setting of CKD when it is hydrated, and thereby improving its flow characteristics.[18]

The addition of water and/or chemicals, however, limits the amount of CKD that can be returned,[19] presumably because kiln efficiency would be reduced. In the case of water addition, too much water would require excessive energy for dehydration. In the case of chemicals, the introduction of too many additives could yield recirculating loads of unusable CKD that negate the benefits of treating the material in this manner. Lastly, this alternative can be costly.

8.1.3 Treatment and Return of CKD to the Kiln

CKD that contains alkalies or possesses other undesirable characteristics may be treated so that it can be returned to the kiln system. Although few treatment processes have been commercially adopted on a wide scale, research into CKD treatment and recycling has yielded a number of promising technologies. These include pelletizing, leaching with water, leaching with potassium chloride solution, alkali volatilization, recovery scrubbing, and fluid bed dust recovery.

Pelletizing

Pelletizing is generally a physical transformation of CKD that makes it more manageable in certain situations. In addition to pelletizing for return to the kiln system, much CKD is also pelletized prior to disposal in waste management units. This technology has been in existence for over 15 years, and can be used to return CKD to the flame or the feed ends of the kiln.[20] In contrast to insufflation of unaggregated CKD, the pelletizing process gives the CKD the necessary strength to withstand the forces of being fired into the flame without resuspending large quantities of particulate matter. No binder is necessary, and no deterioration is found when the pellets are introduced through the chain section.[21] Pelletizing also avoids the need for any major modification of flame characteristics. The pellets form clinker, which is chemically indistinguishable from normal clinker.[22]

Pelletizing may also involve adding a binder and/or raw feed to the CKD. As discussed below, pelletized CKD can be used with other treatment technologies to improve its handling characteristics. Technologies discussed below in which pelletized CKD has been used include alkali volatilization and fluid bed dust recovery.

Leaching with Water

By leaching alkali salts out of CKD using water, the amount of dust that can be recycled to the kiln can be increased. In the leaching process, dust is mixed with water in a tank or pug mill to produce a slurry of about 10 to 20 percent solids. The slurry is thickened in a clarifier

---

[18] Rates of addition are not provided in the reference source.

[19] Steuch, H.E., 1992, *op. cit.*

[20] Sell, Nancy J. and Fritz A. Fischbach. 1978. *Pelletizing Waste CKD for More Efficient Recycling*. Industrial and Engineering Chemistry, Process Design and Development. Volume 17, Number 4. October. pp. 468-473.

[21] *Ibid.*

[22] *Ibid.*

where solids settle to the bottom and excess water overflows the top. The underflow from the clarifier contains about 50 percent solids and is returned to the kiln to produce clinker. In wet process kilns, the underflow slurry is either mixed with the feed slurry or pumped into the kiln through a pipe parallel to the kiln feed.[23] In dry process kilns, the underflow must be filtered and dried before it can be blended with the raw mix or its components. Leaching with hot water has been found to remove more alkali than leaching at ambient conditions.[24,25]

The alkaline wastewater from the leaching process must be treated before it can be discharged because it has a high pH and high concentrations of dissolved and suspended solids. To solve this problem, electrodialysis has been investigated for use after leaching to remove alkali salts from the leachate and to recover salts that may be marketable as fertilizers by evaporation and fractional crystallization.[26] An electrodialysis stack creates an internal electric potential that forces ions from the leachate through semipermeable membranes into a concentrated brine. Water that enters the brine by osmosis carries with it the concentrated salts. The remaining partially desalted water is reused to leach alkali from CKD; no wastewater is discharged.[27] The concentrated brine from the electrodialysis stack contains about 20 percent dissolved solids (mainly potassium, sodium, carbonate, and sulfate). Depending on the ratio of potassium to sodium, the brine may be suitable as a liquid fertilizer, or potassium can be further purified and concentrated by fractional crystallization and evaporation.[28] In some cases, high calcium concentrations can interfere with electrodialysis. To reduce excessive calcium concentrations, wastewater can be run through two carbonators in which the calcium will combine with carbon dioxide and precipitate out as $CaCO_3$ before the wastewater is sent through the electrodialysis stack.[29] The extent to which these technologies are used commercially, or their associated costs, were not found in the available literature.

Generation of wastewater is not a precondition to the use of alkali leaching, as demonstrated by the Ash Grove Cement, Inkom facility. In a modified version of alkali leaching, the operators of this facility in Idaho concentrate the alkalies in the leaching water to produce a potassium sulfate solution. Ash Grove has been leaching alkalies from CKD and selling potassium sulfate to farmers since the 1950s. In this process, CKD is moved from the air pollution control units to a concrete holding tank using a dust elevator. Water is added to this tank, where the alkalies are leached from the CKD and subsequently concentrated through solar evaporation in two holding ponds; the bottom sludges from the holding tank are pumped to the raw mix slurry tank. The facility operator performs analysis on the sludge returned to the kiln feed to account for input variations. From the evaporation ponds, the facility sells the potassium sulfate for approximately $2.80 per metric ton to a local broker who purchases about 9,000 metric tons (10,000 tons) per year of the product. Local potato farmers spray-apply this solution

---

[23] Davis, T.A., *et al.*, 1975, *op. cit.*

[24] *Ibid.*

[25] Personal Communication with Henry Voldbaek, Ash Grove, Inkom, Idaho, December 9, 1992.

[26] Davis, T.A., *et al.*, 1975, *op. cit.*

[27] *Ibid.*

[28] *Ibid.*

[29] Davis, T.A., *et al.*, 1975, *op. cit.*

to their fields. According to Ash Grove Cement, this leaching and return process results in 100 percent recycling of CKD.[30]

In addition to the Ash Grove, Inkom facility, only one other facility is known to treat CKD with water leaching -- the Holnam Plant in Dundee, Michigan. The operators of this facility use a water circulation system to leach alkalies from CKD. In this process, CKD is blown down to a thickening tank for clarification (settling). The slurry contained in the underflow is recycled back to the wet process kiln. The clarified portion of the tank contents is pH-neutralized using waste acid, and directed to a holding tank. From this tank, most of the water is recycled for process water, while a smaller portion is discharged through a NPDES-permitted outfall. This technology produces no saleable byproducts. According to Holnam, the start-up costs for implementing this technology are extremely low.[31]

The economic costs and benefits of CKD leaching with water are described more fully in Chapter 9.

Leaching with a Potassium Chloride Solution

Another procedure to increase the quality, and hence, quantity, of CKD returned to the kiln system involves leaching alkali out of the dust with a potassium chloride solution. In this process, CKD is mixed with a hot KCl solution that produces a slurry high in pH, dissolved solids, and suspended solids. The slurry is then treated with an oily hydrocarbon and a long-chain fatty acid to flocculate the slurry solids for separation.[32] After separation of the solids, the remaining aqueous phase is cooled to induce KCl crystallization. Optimal leaching conditions were found at 70 to 80°C (158 to 176°F).[33] No recent discussion of this technology has been found, suggesting that it has not been applied commercially in the U.S.

Alkali Volatilization

Alkali volatilization represents another method to recover alkali from the surface of CKD particles. This technique generally involves subjecting the CKD to a high temperature flame, then condensing the resulting alkali vapors from the hot gases onto a cooler surface. (Although volatilization occurs during insufflation under normal kiln operating conditions, separation of the alkali is not accomplished because the alkali recondenses onto the CKD in the kiln rather than being removed.)[34]

Sintering[35] is the primary method used to achieve alkali volatilization from CKD. In one pilot study, pelletized samples were sintered for one to two hours at a temperature of 1,100

---

[30] Personal communication with Henry Voldbaek, Ash Grove, Inkom, Idaho, December 9, 1992.

[31] Personal communication with Harry Hackett, Holnam, Dundee, Michigan, January 28, 1993.

[32] McCord, A.T., 1977. *CKD Treatment - By Leaching with Hot Potassium Chloride Solution to Recover Alkali Values.* U.S. Patent No. 4031184.

[33] *Ibid.*

[34] Davis, T.A., *et al.*, 1975, *op. cit.*

[35] Sintering is the process of heating a material such that it becomes a coherent mass without melting.

to 1,300°C. The study also examined melting pelletized samples at temperatures of 1,600 to 1,700°C for 30 minutes. Researchers noted a first order decomposition of the alkalies in heated CKD through this process, and concluded that the most likely mechanism for the removal of alkalies is the formation of volatile potassium and/or sodium. After thermal treatment, both sintered and melted samples met ASTM standard cement criteria levels for Al_2O_3, CaO, Fe_2O_3, K_2O, and MgO.[36] X-ray diffraction analysis and compression tests also indicated that cement made from sintered or molten CKD would be within ASTM alkali standards. In this study, the alkali content found in sintered or melted CKD was less than 0.094 percent, almost an order of magnitude below the ASTM standard of 0.6 percent. Researchers concluded that temperatures above 1,300°C, and in the presence of carbon (i.e., a reducing atmosphere) are sufficient for effective alkali volatilization from CKD.[37] The current status of this technology has not been determined.

In a similar process, CKD was mixed with fly ash containing alumina, and sintered for the purpose of recovering the alumina.[38] This process involves combining fly ash with CKD and soda ash, pelletizing the mixture, and sintering at temperatures between 1,200 and 1,300°C. The sintered pellets are leached with a dilute solution of soda ash to recover the alumina. The waste from this recovery process is dicalcium silicate, which shows promise as a raw material in the manufacture of low-alumina and conventional portland cement.[39] The current status of this technology has also not been determined.

Recovery Scrubbing

Another CKD treatment technology is the flue gas desulfurization (FGD) process, or recovery scrubber. This process enables all CKD to be recycled as kiln feed by removing alkalies, chlorides, and sulfates from the dust. The recovery scrubber creates a recycling system that produces potassium fertilizer as well as reusable feed, and reportedly discharges only clean air and distilled water.[40,41,42]

Exhibit 8-2 illustrates the various stages of the recovery scrubber process. The first step in the process requires saturating a stream of water with carbon dioxide by introducing it to kiln exhaust gases from the heat exchange process (located at right of the diagram). The CKD input

---

[36] Wilson, R.D. and W.E. Anable, 1986, *op. cit.*

[37] *Ibid.*

[38] Burnet, G., 1987. *Alumina Recovery from Fly Ash by the Lime-Soda Sinter Process.* Proceedings of the International Symposium on Ash. February 2. Pretoria, South Africa.

[39] *Ibid.*

[40] Morrison, G.L., 1990. *CKD and Flue Gas Scrubbing: The Demonstration at Dragon Products Company.* July. p. 7.

[41] Morrison, G.L., 1991. *Flue Gas Scrubbing and Waste Elimination - An Application of the Recovery Scrubber.* Paper presented at The World Coal Institute Conference and Exhibition on Coal in the Environment. April 3. London, United Kingdom.

[42] Anonymous, 1991. *SO_2 Technology Pays for Itself and Then Some.* Coal and Synfuels Technology. January 14. p. 1.

is then mixed with the carbon dioxide-saturated water in the mix tank (on the upper left) to form a slurry. The use

Exhibit 8-2

Process Flow Diagram of Recovery Scrubber

of carbon dioxide-saturated water helps to prevent the slurry from setting or solidifying. The slurry is then introduced to the reaction tank of the scrubber. In the reaction tank, the calcium in the slurry reacts with CO_2 from the heat exchange process to form insoluble $CaCO_3$. At the same time, alkali metal (e.g., sodium and potassium) hydroxides react to form the corresponding sulfates.[43]

From the reaction tank, dissolved solids and suspended solids in the reacted slurry are separated into two process streams via a series of settling tanks (bottom left and right) combined with a dilution tank (bottom center) where the slurry is mixed with an equal quantity of water to reduce the alkali content.[44] The dissolved solids are crystallized through evaporation, using waste heat from the kiln exhaust. The suspended solids (minus soluble alkalies, chlorides, and sulfates), are returned to the cement kiln raw material feed system for reuse in the production of cement; the $CaCO_3$ that forms from the calcium and CO_2 yields "new" limestone. The sulfur from the sulfur dioxide and calcium-sulfur compounds in the exhaust gas combines with the potassium in the CKD to make potassium sulfate, which can be used as a fertilizer.[45]

The recovery scrubber reportedly removes 90 to 98 percent of the sulfur dioxide in the flue gas and improves the kiln's particulate CKD capture efficiency.[46,47,48] In addition to increased cement production, the process yields two marketable by-products: potassium sulfate (a fertilizer) and distilled water. According to all available sources, no process waste flows (i.e., waste material in either liquid or solid form) result from the process.[49,50,51] Although water is added to this process, there is no liquid effluent because all the added water is evaporated into the flue gas.[52]

According to Passamaquoddy Technology, which is marketing the system, the process can be widely used with modifications in both wet and dry process cement kilns. Site-specific factors

---

[43] Anonymous, 1991. *Chloride-Free Potash Fertilizer from Waste SO_2 and CKD.* Phosphorous and Potassium. July-August. p. 48.

[44] Morrison, G.L., 1990. *Exhaust Gas Scrubbing and Waste Elimination, An Application of the Recovery Scrubber to a Cement Kiln.* Paper presented at the 1990 SO_2 Control Symposium. May 8. New Orleans, Louisiana.

[45] Anonymous, 1991. *"Home-Grown" Scrubber Protects the Environment of an Indian Reservation.* Sulphur. July-August. p. 24.

[46] Anonymous, 1991. *SO_2 Technology Pays for Itself and Then Some. Coal and Synfuels Technology.* January 14. p. 1.

[47] Anonymous, 1991. *Recovery Scrubber Meets Design Goals.* Coal and Synfuels Technology. April 22. p. 5.

[48] Morrison, G.L., 1991, *op, cit.*

[49] Morrison, G.L., 1992. *CKD Management Using a Recovery Scrubber: Operation and Economics.* Paper presented at the Portland Cement Association Seminar on Emerging Technologies for Kiln Dust Management. March 4. Chicago, Illinois.

[50] Anonymous, 1991. *Recovery Scrubber Meets Design Goals.* Coal and Synfuels Technology. April 22. p. 5.

[51] Personal communication with Garrett Morrison, Passamaquoddy Technology, November 24, 1992.

[52] Anonymous, 1991. *Chloride-Free Potash Fertilizer from Waste SO_2 and CKD.* Phosphorous and Potassium. July-August. p. 48.

requiring design modifications would include kiln characteristics, raw feed characteristics, cement product specifications, and fuel type.[53,54] For example, if these factors yield CKD high in sodium, a double potassium crystallizer would be required to make the potassium sulfate by-product marketable.[55]

Currently, the Dragon Products Company in Thomaston, Maine, owns the only commercial-scale recovery scrubber system in operation. This $18 million[56] trial plant was co-funded by the U.S. Department of Energy's Clean Coal Technology program and began operation in 1990.[57] Although there are no other installations, Passamaquoddy Technology has conducted about 35 plant-specific, engineering evaluations to determine if application of the technology at specific plants is justified and if so, in what configuration.[58] Although it has evoked considerable interest in the United States and abroad, the extent to which this technology will be adopted across the industry is unclear.

With respect to start-up and operating costs, the recovery scrubber system may be more capital-intensive than a traditional system, but the savings in avoided resource losses and CKD disposal costs reportedly yield a net savings. Moreover, the system requires no net increase in personnel. Modifications can, however, significantly increase the cost. For example, a double crystallizer, if required, would add about $1 million to the start-up costs. A continuous metals extractor for the CKD can also be installed for an additional $200,000 to $300,000.[59] The recovery scrubber system also requires higher energy inputs than traditional systems.

The recovery scrubber reportedly confers cost savings due to avoided resource losses and CKD disposal costs. Moreover, the process allows the facility increased flexibility in using high sulfur fuel (which tends to be less costly than low sulfur fuel) in the kiln. Dragon Products expects payback from installation of the recovery scrubber within two to three years. After the payback period, the recovery scrubber at the Dragon facility is expected to generate process savings, avoided CKD disposal costs, and additional income from the sale of by-products.[60,61,62] According to Dragon Products, the potassium sulfate (potash) production

---

[53] Morrison, G.L., 1990, *op. cit.*

[54] A discussion of specific design and operating limitations of this process has not been located in any of the available literature.

[55] Personal communication with Garrett Morrison, Passamaquoddy Technology, November 24, 1992.

[56] Personal communication with Garrett Morrison, Passamaquoddy Technology, July 2, 1993.

[57] Anonymous, 1991. *SO_2 Technology Pays for Itself and Then Some.* Coal and Synfuels Technology. January 14. p. 1.

[58] Personal communications with Garrett Morrison, Passamaquoddy Technology, November 24, 1992 and July 2, 1993.

[59] *Ibid.*

[60] Morrison, G.L., 1992, *op. cit.*

[61] Anonymous, 1991. *SO_2 Technology Pays for Itself and Then Some.* Coal and Synfuels Technology. January 14. p. 1.

rate is expected to range from 7 to 9.1 metric tons per day; this material may be worth as much as $220 per metric ton.[63] According to independent trade and government sources, if the product is of sufficient quality, it may be worth $198 to $355 per metric ton.[64,65]

Dragon Products recycles not only all the CKD it generates, but also consumes CKD from its stockpile of dust generated during previous years. For possibly as many as 100 years, Dragon Products had been disposing its CKD in an on-site pile at a rate, that until recently, averaged 230 metric tons per day. Material from this pile is now being mined and reintroduced to the kiln at a rate of approximately 90 to 270 metric tons per day, so that Dragon Products expects to eliminate its existing CKD waste pile in the near future.[66,67]

In addition to recycling their own dust, it may be possible that cement plants with recovery scrubbers could consume wastes generated by other industries, such as paper mills and biomass-burning power plants, and charge a tipping fee for the service. Dragon Products will reportedly be accepting about 45,000 metric tons per year of wood and coal ashes, at a tipping fee of $33 per metric ton.[68] Other wastes that reportedly can be accommodated include acids or bases and ash from other burners.[69,70]

The economic costs and benefits of the recovery scrubber technology are examined in further detail in Chapter 9.

Fluid Bed Dust Recovery

The fluid bed dust recovery process, or Fuller process, thermally treats the CKD (on either a gross or net basis). Although this process does not return CKD to the kiln system, it is functionally similar to such return technologies because it yields a usable cement clinker product rather than treated CKD. The fluid bed process is designed to accept all CKD generated from a kiln, pelletize it, and calcine it into clinker on a fluid bed instead of in a typical rotary kiln.[71]

---

[62] *Ibid.*

[63] Personal communication with Garrett Morrison, Passamaquoddy Technology, July 2, 1993.

[64] Chemical Prices Weekly, 1992. *Potassium Sulfate.* Ending December 25. p. 28.

[65] Bureau of Mines, 1989. *Minerals Yearbook, Vol. 1, Metals and Minerals, Potash* (James P. Searls auth.). Department of the Interior. pp. 801-805.

[66] Anonymous, 1991. *"Home-Grown" Scrubber Protects the Environment of an Indian Reservation.* Sulphur. July-August. p. 24.

[67] Morrison, G.L., 1990, *op. cit.*

[68] Personal communication with Garrett Morrison, Passamaquoddy Technology, July 2, 1993.

[69] Anonymous, 1991. *"Home-Grown" Scrubber Protects the Environment of an Indian Reservation.* Sulphur. July-August. p. 24.

[70] Morrison, G.L., 1990, *op. cit.*

[71] Cohen, S.M., 1992. *Fluid Bed Dust Recovery.* Paper presented at the Portland Cement Association Seminar on Emerging Technologies for Kiln Dust Management March 4. Chicago, Illinois.

The unusable constituents are concentrated into a waste dust that represents 10 percent of the original input dust volume.

During pelletization, CKD enters a pug mill, where the free lime in the CKD reacts with introduced moisture, and the CKD is pelletized. Generally CKD requires only water for pelletization. However, in some cases, a binder (e.g., five percent portland cement) may be required. As illustrated in Exhibit 8-3, the Fuller process operates on a gravity system, in which dried CKD pellets are gravity fed into the reaction zone of the fluid bed reactor for a retention time of 1-2 hours. The pelletized CKD reacts to form clinker and moves along the fluid bed and drops into a pipeline for cooling and subsequent grinding.[72]

In the fluid bed, the combustion and calcining gases flow upward and are directed away from the raw feed. The gases released from the clinkering process exit the fluid bed without contacting the incoming raw material. In contrast, the exhaust gases in conventional cement kilns contact incoming raw material and reprecipitate alkalies onto the raw material particles. The fluid bed process reportedly removes as much as 90 percent of the K_2O, 70 percent of the Na_2O, 90 percent of the SO_3, and almost 100 percent of the chlorides contained in the original feed dust. These compounds are concentrated in the unusable dust fraction (i.e., 10 percent of the original CKD input) that is removed from the fluid bed system by directing exhaust through a baghouse.

The fluid bed process yields clinker output at 60 percent of the CKD input (i.e., 0.6 tons of clinker is generated per ton of CKD input). Waste dust is generated at approximately 10 percent of the CKD input. The fate of the remaining 30 percent of the original CKD input has not been addressed. Presumably, it is either returned to the system or lost as gaseous emissions or both. These generation rates are comparable to those of kilns using virgin raw materials. Because the unusable dust contains approximately 40 percent potassium, it may be of value as a fertilizer feedstock. Further evaluation is needed, however, to assess the effects of other constituents that may also be present in the dust. The presence of heavy metals presents one potential concern, although initial tests indicate that the unusable dust from the Fuller process is no higher in heavy metals than dust from conventional rotary kiln cement processes.[73]

A wide range of solid fuel sources (e.g., coal, petroleum coke) can be added to CKD during pelletization to provide up to 90 percent of the process energy requirement. A clinker bed moves above a grid plate through which air is driven. This clinker bed is held at 1,300°C by injection of oil or gas directly into the moving bed of material. The added fuel supplies the remaining 10 to 15 percent of the heat requirement after the fuel in the pellets is burned. Projected fuel consumption for a commercial level plant is 1.15 million kilocalories (Kcals) per metric ton (4.14 million Btus per ton) of clinker. According to Fuller, this figure is competitive with both wet and long dry commercial systems but not with preheater or flash calcining systems, if compared to normal clinker production. This claim is verified by the data in Exhibit 2-7 of this report. As shown in Exhibit 2-7, energy consumption (Kcal/Kg of output) is 1,529 to 1,668 for wet process kilns, 1,251 to 1,390 for dry process kilns, 945.2 for semi-dry kilns, and 750.6 to 889.6 for preheater kilns. Specific information is not available for precalciner kilns, but the energy consumption of such kilns is believed to be similar to that of preheater kilns. The Fuller process

---

[72] *Ibid.*

[73] Personal communication with Sidney Cohen, Fuller Company, July 20, 1993.

minimizes energy loss by reclaiming the heat contained in exhaust gases with a heat recovery system.[74,75]

[74] *Ibid.*

[75] Personal communication with Sidney Cohen, Fuller Company, November 13, 1992.

Exhibit 8-3

Process Flow Diagram of Fluid Bed Dust Recovery Process

This technology has only been used to date on a pilot scale. Although reportedly ready for market, this system is still undergoing extensive research. For example, a uniform set of operational parameters has not yet been developed. Tests indicate that the operational parameters are facility-specific, and that system designs would have to be individually tailored. Many aspects of the reaction dynamics are also not fully understood. The end product and by-products of the reactor are being analyzed to confirm cement (clinker) quality and to determine the dynamics of the recovery process as they relate specifically to metallic and other components. Material and heat balances are being developed to establish the overall energy consumption for the process, as well as to provide data for economic evaluations.[76]

In pilot scale tests, this system has successfully produced a clinker product and a highly concentrated alkali dust product using CKD from 10 different cement plants. The fluid bed recovery process can provide the benefit of generating a usable product, and decrease by up to 90 percent the amount of CKD that is regularly disposed. The remaining 10 percent of the received CKD becomes a potentially marketable by-product that is high in potassium. Alternatively, this material can be leached to remove alkalies, producing solids that can be returned to the process and a highly concentrated solution that can be utilized for chemical production.[77] As mentioned above, the economic viability of the process depends on each facility, and is a function of the quantity of dust generated, kiln capacity, and dust management costs. Therefore, a unit cost for the process is not realistic.[78] According to the manufacturer, estimated capital investment for a complete 270 metric ton per day (300 TPD)[79] installed system (as CKD input, to produce up to 160 metric tons clinker) would be $9 to $10 million,[80] with an estimated payback period of six years.[81]

8.2 BENEFICIAL USE OF REMOVED CKD

It is likely that even with advances in recycling technologies, some CKD will need to be removed from kiln systems. Because resources are lost when CKD is permanently disposed, and because disposal practices can be burdensome, finding alternative uses for waste CKD can help facilities avoid disposal costs and even generate additional revenue. CKD has been used beneficially for at least 15 years, and interest in uses for CKD as a valuable resource appears to be growing. According to responses from the 1991 PCA Survey and §3007 requests, 779,916 metric tons (859,709 tons) of CKD were used beneficially in 1990, or 5.4 percent of the gross CKD generated in 1990, and about 16 percent of the net CKD for that year. Of this total, about 71 percent (670,000 metric tons) was used for waste stabilization, 12 percent (111,000 metric tons) for soil amendment, 5.6 percent (53,000 metric tons) as liming agent, nearly three percent (25,000 metric tons) as materials additive, about one percent (11,000 metric tons) as road base, and eight percent (76,000 metric tons) for other uses.

---

[76] Cohen, S.M., 1992, *op. cit.*

[77] Personal communication with Sidney Cohen, Fuller Company, July 20, 1993.

[78] Personal communication with Sidney Cohen, Fuller Company, November 13, 1992.

[79] An installation of this size would be adequate to treat total net dust generated at most plants in the U.S.

[80] Cohen, S.M., 1992, *op. cit.*

[81] Personal communication with Sidney Cohen, Fuller Company, November 13, 1992.

The ASTM suggests that CKD may be useful in a variety of applications, including construction, stabilization, waste treatment, and agriculture. Due to the variability in dust composition, however, ASTM advises that use of CKD should be undertaken only after the material's characteristics have been properly evaluated with respect to the intended application. ASTM also recommends frequent performance testing until the degree of variability has been established.[82]

Currently, CKD is used beneficially for sludge, waste, and soil stabilization, land reclamation, waste remediation, acid neutralization, agricultural applications, such as fertilizer and lime substitution, and construction applications. These CKD uses, however, appear to represent only a portion of potential beneficial applications for this material. The manner and extent of CKD adaptation for beneficial applications is in constant flux as research and development of CKD use continue to grow.

8.2.1 Stabilization of Sludges, Wastes, and Contaminated Soils

CKD has been used as an agent to solidify and stabilize waste materials and contaminated soils since at least 1982. According to respondents to the 1991 PCA Survey and §3007 requests, 70.8 percent of the CKD that was sold or given away was used for waste stabilization. CKD has been used with reported success on sewage sludge, waste oil sludge, and miscellaneous other wastes. The elevated pH of CKD helps to neutralize the acid conditions and decrease the mobility of heavy metals in these materials. CKD can also help to dewater contaminated materials and thereby increase weight-bearing capacity and possibly reduce the threat of leachate migration.

Sewage Sludge

Economical and effective treatment technologies for municipal sewage sludge have been sought for many years. Without treatment, sludge may contain unwanted microbial pathogens and it may not be in a solid form conducive to handling. Treating the sludge with CKD may improve its physical, chemical, and biological characteristics. For example, trace metals in the sludge are immobilized by precipitation and coprecipitation as carbonates, oxides, hydroxides, phosphates, and sulfates.[83] A considerable amount of research has been conducted on the use of CKD as
a medium for dewatering and stabilizing raw or digested sewage treatment sludges.[84,85,86,87,88]

---

[82] ASTM, 1991. *Standard Guide for Commercial Use of Lime Kiln Dusts and Portland CKDs.* 1990 Annual Book of American Society for Testing and Materials Standards. Volume 11.04. Method Number D5050-90. pp. 172-174.

[83] Based on notes developed by ICF Incorporated during the 5th Annual International Conference on Alkaline Pasteurization and Stabilization, Somerset, New Jersey, May 18-19, 1992.

[84] Anonymous, 1985. *Mobile Hazardous Waste Treatment Services - What's Available?* Hazardous Waste Consultant. September-October.

[85] Burnham, J.C., *et al.*, 1990. *CKD Stabilization of Municipal Wastewater Sludge.* Annual International Solid Waste Exposition "Vancouver 90." August. Canada.

[86] Kovacik, T.L., 1988. *Sludge, Kiln Dust Make Fertilizer.* Water Engineering Management. December.

[87] Metry, A.A., *et al.*, 1985. *A Cost-Effective Approach For Stabilization and Closure of an Organic Waste Superfund Site.* 31 Annual Meeting of the Institute of Environmental Sciences. April 29. Las Vegas, Nevada.

Presently, CKD is being used commercially to stabilize municipal sewage sludge by at least two companies: (1) Keystone Cement Co., which markets CKD under the name StableSorb as a sewage sludge dewatering agent; and (2) National N-Viro Energy Systems (N-Viro), which markets a CKD-stabilized sewage sludge as N-Viro Soil.

The treated sludges have been used as landfill cover, structural fill material, dike construction material, and for agricultural purposes.[89,90,91] Agricultural application of sewage sludge has also been a common method of sludge management. Sludge contains a number of nutrients beneficial to plants, including nitrogen, phosphorus, sulfur, calcium, potassium, magnesium, and a host of nutrients needed in small quantities.[92] Because, however, these nutrients can occur within a wide range of concentrations, sludge used for agricultural purposes may require nutrient supplements.

In 1992, Keystone sold over 38,000 metric tons (42,000 tons) of StableSorb, a considerably lower figure than its record sales of 74,000 metric tons in 1990, but greater than its 1991 total of 25,000 metric tons. The anomalously high figure for 1990 was apparently the result of an unusually large project that used StableSorb during that year.[93] The low price of CKD compared to its substitutes makes it highly competitive in the market. Keystone sells the dust for $10 per metric ton ($9 per ton) F.O.B. (freight on board)[94]. Transportation costs, however, can add up to $22 per metric ton ($20 per ton) to the sale price of the dust. Keystone supplied CKD for two years to a utility in New Jersey for use in waste stabilization. Prior to the use of CKD, the utility used fly ash for this purpose. The utility combined the dust and waste in a slurry tank, in which the waste was thereby stabilized; the stabilized waste was used as a landfill cover. They also blended CKD with dry wastes to form a landfill filler. Some buyers have been concerned about potential dust quality impacts when Keystone burns hazardous waste as a kiln fuel. According to Keystone, these concerns have been allayed through the use of constituent test results, though Keystone is reportedly not selling StableSorb pending EPA's regulatory determination for CKD. For specialized requests, Keystone will modify the CKD by blending it with cement to give the product more strength. For such a treatment, the price increases by the

---

[88] Zier, R.E. and E. Wood, 1991. *Sludge: Sludge Solutions.* Waste Information Digests. May.

[89] Keystone Cement Company, date unknown. *Stablesorb: A Coproduct of Cement Manufacturing With a Variety of Uses.* Product Brochure.

[90] Burnham, J.C., 1988. *CKD/Lime Treatment or Municipal Sludge Cake, Alternative Methods For Microbial and Odor Control.* Paper from Proceedings of National Conference on Municipal Sewage Treatment Plant Sludge Management. June 27-29. Palm Beach, Florida.

[91] Personal communication with J. Patrick Nicholson, N-Viro Soil, December 7, 1992.

[92] Kelley, W.D., D.C. Martens, R.B. Reneau, Jr., and T.W. Simpson, 1984. *Agricultural Use of Sewage Sludge: A Literature Review.* Bulletin 143. Virginia Water Resources Research Center, Virginia Polytechnic Institute and State University, Blacksburg, Virginia. December. p. 38.

[93] Personal communication with Doug Glasford and Bill Fischer, Keystone Cement, November 24, 1992.

[94] The F.O.B. price of a product is the price that would be charged if the product were to be picked up from the shipping dock; it excludes the cost of loading goods aboard a carrier, transportation costs, and all other costs beyond the port of export.

percentage of added cement multiplied by $55 per metric ton (e.g., a 10 percent blending adds $5.50 per metric ton to the price).[95]

N-Viro Soil is used with or instead of lime to disinfect and deodorize municipal sewage sludge, and according to the company, it provides a safe and socially-acceptable solution for treating the sludge. N-Viro Soil is produced by combining CKD and municipal sludge through a patented process called "Advanced Alkaline Stabilization with Subsequent Accelerated Drying." This N-Viro technology uses a combination of microbiological stresses to kill pathogens and stabilize the sludge to produce what is described as "a soil-like product." CKD's high alkali and exothermic properties produce a pH of about 12 and generate temperatures between 52 and 62°C when mixed with the moisture contained in sewage sludge.[96]

N-Viro Soil contains between 35 and 75 percent CKD by weight. The alkali and CaO content of CKD reportedly contribute to the characteristics of the product and make it a suitable agricultural lime substitute. The large surface area and low moisture content of fine-grained CKD particles provide odor control and accelerate drying. When combined with sludge, CKD reportedly dilutes trace metal concentrations and reduces the solubility of trace metals. Further, the heat produced from the hydrolysis reaction between CKD and the sludge moisture, combined with elevated pH levels, apparently kills all pathogens in the sludge.[97] In addition, this mixture produces an artificial soil that can be used as a cover material for landfills and as an agricultural lime substitute for soils.[98] CKD also contributes most of the base elements (i.e., Ca, Mg, K, Na) in N-Viro Soil that make the product a useful soil amendment.[99] The product reportedly can be stored for long periods of time without deterioration.[100,101] One of the primary drawbacks of N-Viro Soil is that a relatively large quantity of kiln dust is required to treat a given unit of sludge, meaning that significant quantities of CKD must be transported and handled to treat a given quantity of sludge.[102]

Regulations that govern the quantity of metals that can be applied to land in sludge may limit the application rate of CKD-stabilized sludge (since sludge itself has high metals concentrations);[103] N-Viro Soil ostensibly meets these requirements.[104,105] In addition, 40

---

[95] *Ibid.*

[96] N-Viro Energy Systems, 1991. Promotional Bulletin - N-Viro Soil.

[97] Personal communication with Robert Bastian, Office of Wastewater Enforcement and Compliance, EPA, November 1992.

[98] *Ibid.*

[99] N-Viro Energy Systems, 1991, *op. cit.*

[100] In tests, N-Viro Soil has apparently been stored for over 500 days. (PR Newswire, September 21, 1988).

[101] Kovacik, T.L., 1987. *Successful Recycling for Sludge and Solid Waste.* BioCycle Southeast Conference. November 4. Orlando, Florida.

[102] Personal communication with Robert Bastian, Office of Wastewater Enforcement and Compliance, EPA, November 1992.

[103] *Ibid.*

CFR Part 503, promul-gated on November 27, 1992, has established permitting regulations with respect to sludge use and disposal practices.[106] According to N-Viro, their purchases of CKD must meet specifications for metals levels set by EPA's clean sludge rule as outlined below:

Constituent	Concentration Limit (ppm)
Arsenic	<41
Cadmium	<39
Chromium	<1200
Copper	<1500
Lead	<300
Molybdenum	<18
Mercury	<17
Nickel	<490
Selenium	<36
Zinc	<2800

The greatest barrier to CKD use is likely to be the lack of specifications for metals contents and products of incomplete combustion (PICs). N-Viro reportedly does not purchase CKD from plants that burn hazardous waste. However, this policy is followed more because of public perception than for technical reasons.[107]

The N-Viro process appears to be less costly than existing methods of sludge treatment. In 1988, the city of Toledo, Ohio, signed a five-year contract with National N-Viro Energy Systems to build and operate a $3 million facility to convert sewage sludge into fertilizer. Toledo's Director of Public Utilities stated that a comparable composting plant would have cost $25 to $30 million.[108] The cost of operating the plant was estimated at about $39 per wet metric ton ($35 per wet ton), after dewatering, compared to the $52 per wet metric ton that the city was spending at the time to haul its sludge to a reclamation project. The city expects to realize a profit from fertilizer sales resulting from the project within five years.[109]

The use of N-Viro Soil has increased rapidly as indicated by sales of the product that have doubled each year for the past four years. In 1992, more than 900,000 metric tons of N-Viro Soil were sold.[110,111] Some CKD obtained by N-Viro goes to uses other than sewage

---

[104] Anonymous, 1988. *Toledo City Council Approves Five-Year Contract With National N-Viro Technology, Inc. For Sewage-Agricultural Facility.* PR Newswire. September 21.

[105] Burnham, J.C., 1988, *op. cit.*

[106] Personal communication with Robert Bastian, Office of Wastewater Enforcement and Compliance, EPA, November 1992.

[107] Personal communication with J. Patrick Nicholson, N-Viro Soil, December 7, 1992.

[108] Anonymous, 1988. *Toledo City Council Approves Five-Year Contract With National N-Viro Technology, Inc. For Sewage-Agricultural Facility.* PR Newswire. September 21.

[109] Anonymous, 1988. *Toledo Tries a Sludge First.* Engineering News-Record. September 29.

[110] CKD comprises only about 35 percent of this N-Viro soil.

[111] Personal communication with J. Patrick Nicholson, N-Viro Soil, December 7, 1992.

sludge stabilization. Although 80 percent of the CKD the company sells is used to stabilize sewage by producing N-Viro Soil, the remaining 20 percent is sold as dust for direct application in other beneficial uses.[112] The company claims that use of N-Viro Soil has resulted in substantial savings (more than $42 per acre) to farmers by reducing chemical fertilizer costs and by increasing yields on crops such as soybeans, corn, and alfalfa.[113] N-Viro Soil mixed with fly ash has also been used as an aggregate diking material in Wilmington, Delaware.[114] The product is, however, expensive to transport. N-Viro sells 136,000 metric tons a year to a company in New Jersey at $28 to $39 per metric ton, of which transportation costs represent 50 percent.[115]

Although N-Viro's technology has grown rapidly as a promising management alternative for CKD that would otherwise be disposed, several factors may impede its market growth potential. Such factors include regulatory uncertainties.[116] Alternative additives may also reduce the importance of CKD to sewage sludge stabilization. For example, N-Viro also uses sulfur scrubbing residue and fluidized bed residue as a sludge additive, because these materials have more activated carbon and impart better odor control than CKD.[117] Although any trend is unclear, these substances may replace CKD in the future.

Sewage sludge stabilization has been implemented on a more modest commercial scale as well. In Cayce, South Carolina, government regulations required treatment of activated sewage sludge before landfill disposal. After evaluating several processes, the city opted for a screw press dewatering system, supplemented by the application of CKD. The sludge is dewatered to a cake before it is mixed with the dust. The dust raises the cake's pH level from 9.0 to 11.2 to destroy bacteria and other pathogens and chemically binds any heavy metals in the sludge. The new system has reportedly saved the city money and keeps odors to a minimum.[118]

Oil Sludge

In addition to municipal sludge stabilization, the use of CKD to solidify oil sludge has also elicited a fair amount of interest and research.[119,120,121] According to one source, CKD has

---

[112] *Ibid.*

[113] Anonymous, 1992. N-Viro Achieves Record Year. PR Newswire. February 19.

[114] Personal communication with Robert Bastion, Office of Wastewater Enforcement and Compliance, EPA, November 1992.

[115] Personal communication with J. Patrick Nicholson, N-Viro Soil, December 7, 1992.

[116] *Ibid.*

[117] *Ibid.*

[118] Billings, C.H., 1992. *Screw Press/Kiln Dust Combination Doubles Drying Bed Production.* Public Works. May.

[119] Morgan, D.S., *et al.*, 1984. *Oil Sludge Solidification Using CKD.* Journal of Environmental Engineering. October.

[120] Thorsen, J.W., *et al.*, 1983. *In Situ Stabilization and Closure of an Oily Sludge Lagoon.* 3rd Ohio Environmental Conference. March. Columbus, Ohio.

proven to be one of the most efficacious and economical means of solidifying non-recoverable waste oil sludge, producing a stable and compactible fill material with good compressive strength. Solidification of oily sludge in landfills makes it possible to use a reclaimed landfill site for industrial construction.[122]

In 1983, CKD was used by the city of Wichita, Kansas, to solidify highly acidic oil sludge. Oily sludge had accumulated during the 1950s and 1960s in the John's Sludge Pond from the oil recycling and reclamation operations of Super Refined Oil Co. The use of sulfuric acid to refine waste oil for recycling created an acidic layer on top of the sludge pond that frequently overflowed into nearby surface waters. In 1983, under orders from EPA, the city excavated and solidified the sludge using CKD with redeposition of the treated sludge into a compacted clay-lined cell followed by capping, using a compacted clay cap. No contaminant levels requiring further action were detected in surface and ground water following this action.[123]

In another example, CKD was used to solidify oil sludge during a site remediation project near Dallas, Texas, in 1982. Operators determined CKD to be the best of several alternatives in terms of chemical properties and cost effectiveness. The reaction of CKD with water to form calcium hydroxide removed a significant portion of the free water from the sludge. This reaction also provided a solid matrix of sufficient density and weight-bearing capacity that it could be used as a fill. In addition, the binding effect of the kiln dust reportedly prevented the oil from leaching out of compacted layers in the landfill to which it was transferred.[124] The project required an estimated 68,000 metric tons of kiln dust, which was blown into the sludge pit. During the project, operators found that stockpiled kiln dust required a greater dust-to-oil mixing ratio than recently generated dust,[125] presumably because the newer dust contained more unreacted lime.

Acid Waste

The alkaline nature of CKD makes it an effective neutralizing agent for treating acidic materials. Substances that have been neutralized with CKD include industrial acidic wastes, such as spent pickle liquor, and wastes from leather tanning and cotton seed delinting processes.[126] Liquid hazardous wastes have been neutralized, oxidized, or reduced, and then solidified by the addition of CKD and fly ash to form material that has the consistency of coarse gravel.[127]

---

[121] Zarlinski, S.J. and J.C. Evans, 1990. *Durability Testing of a Stabilized Petroleum Sludge.* Paper from Hazardous and Industrial Wastes, Proceedings of 22nd Mid-Atlantic Industrial Waste Conference. July 24-27. Pennsylvania.

[122] Morgan, D.S., *et al.*, 1984, *op. cit.*

[123] Environmental Protection Agency, Office of Emergency and Remedial Response, 1989. *Superfund Record of Decision (EPA Region 7): John's Sludge Pond, Wichita, KS, (First Remedial Action).* Washington, DC., September 22.

[124] Anonymous, 1982. *A Method For Oil Sludge Solidification and Disposal Using CKD Has Reclaimed 133 Acres Near Dallas, Texas.* Waste Age. April.

[125] N-Viro Energy Systems, 1991, *op. cit.* pp. 100-102.

[126] Davis, T.A., *et al.*, 1975, *op. cit.*

[127] Razzell, W.E., 1990. *Chemical Fixation, Solidification of Hazardous Waste.* Waste Management Resources. April.

As discussed below in more detail, CKD can also be used in land reclamation activities to neutralize acid mine drainage,[128] and has reportedly been used to neutralize acidic wastewater.[129] Other neutralization possibilities include CKD use to treat acidic mine waste piles and leachate from hazardous waste and sanitary landfills.

Miscellaneous Wastes and Contaminated Soils

The use of CKD as a solidifying and stabilizing medium for a variety of wastes and contaminated soils, in addition to municipal sludge, oil sludge, and acid wastes, has been studied on several occasions. For example, laboratory studies have been conducted on the use of CKD in conjunction with portland cement and rice husk ash to immobilize synthetic wastes containing cadmium, lead, aldrin, chlordane, and electroplating wastes.[130] Researchers have also investigated the use of CKD to solidify and stabilize contaminated dredged materials.[131] Some uses have been implemented in the field as well. Some examples of miscellaneous CKD stabilization uses are summarized below:

- In 1988, EPA initiated an ash solidification project to evaluate the performance of several techniques, including mixing incinerator ash with CKD. CKD was used to stabilize the ash and harden the mixture into a monolithic block, improving the physical and handling characteristics of the ash.[132]

- In Brisbane, Australia, non-degradable liquid hazardous wastes are chemically treated and then solidified by the addition of fly ash and CKD before permanent burial in clay cells. The wastes include pesticides, paints, organic solvents, and oily wastes. The researchers concluded that leaching test results have been "below 10 times EPA drinking water guidelines."[133]

- The use of CKD to treat sludges can make it possible to use on-site management techniques instead of more expensive off-site disposal alternatives. CKD was used to stabilize an organic sludge at a Superfund site. The stabilized material reportedly provided a sound base for the final cover system.[134]

- Experiments have demonstrated the potential use of CKD to stabilize PCB-contaminated sites. Last year, however, EPA's Risk Reduction Engineering

---

[128] Davis, T.A., *et al.*, 1975, *op. cit.*

[129] Personal communication with Ben Haynes, Engineering, Technology, and Research Division, Bureau of Mines, U.S. Department of the Interior, November 1992.

[130] Ahn, K.H., *et al.*, 1988. *Solidification of Hazardous Wastes: An Approach Using Cementitious Binders.* Paper From Proceedings of 1988 Pacific Basin Conference on Hazardous Waste. February 1-6. Honolulu, Hawaii.

[131] Betteker, J.M., *et al.*, 1986. *Solidification/Stabilization of Contaminated Dredged Material.* Proceedings of Mid-Atlantic Industrial Waste Conference. June 29-July 1. Lancaster, Pennsylvania.

[132] Anonymous, 1988. *EPA, Cities, Industry Press Congress For Incinerator Ash Legislation.* Cogeneration Report. April 22.

[133] Razzell, W.E., 1990, *op. cit.*

[134] Metry, A.A., *et al.*, 1985, *op. cit.*

Laboratory found that the heat produced from the quicklime reaction with PCBs causes these carcinogens to volatilize. The Agency stated that further experiments were planned to examine PCB decomposition and volatilization under simulated field conditions.[135]

8.2.2 Soil Stabilization

As a soil stabilizer, CKD can decrease shifting, subsidence, fugitive dust emissions, and erosion, and thereby provide temporary or permanent stability of soil at locations such as construction sites. It mixes easily with existing soils and maximizes compacted density. Respondents to the 1991 PCA Survey indicated that 12 percent of the CKD used beneficially was used as a soil amendment, some of which probably included soil stabilization. According to Keystone Cement, use of CKD as a soil stabilizer reduces construction costs when it is used to speed up construction schedules (e.g., due to reduced necessary paving thickness, reduced dewatering time).[136]

Blending CKD with other soil stabilizing agents can also be effective. For example, CKD has been found to enhance the ability of waste sulfate to stabilize and strengthen soils. The addition of fly ash to such a mixture can further improve soil strength.[137] CKD can be injected like lime into the ground using rig-mounted tubes that can be driven to desired depths, or it can be mixed with soil using earth moving equipment. Keystone Cement and N-Viro both market CKD as a soil stabilization product.

8.2.3 Land Reclamation[138]

In a manner similar to that used for soil stabilization, CKD has been utilized to reclaim settling ponds, lagoons, or other lands. The added CKD stabilizes and dewaters these lands and can render them useful for industrial, commercial, or residential purposes. Unlike other reclamation procedures, processes, and materials, CKD can reportedly accommodate many treatment procedures without the use of additional materials.[139] The use of CKD to reclaim lands that have been mined has also been studied.[140] CKD is marketed by Keystone Cement and N-Viro for use in land reclamation projects.

In addition to the high lime content in CKD, the easy flowing nature of CKD makes it an attractive neutralizing agent to pump into abandoned mines to treat acid mine drainage. In 1975, one cement plant reportedly disposed CKD in strip mines where it neutralized acid mine

---

[135] Anonymous, 1991. *Quicklime Volatilizes PCBs, EPA Finds*. Superfund. June 28.

[136] Keystone Cement Company, *op. cit.*

[137] Nebgen, J.W., *et al.*, 1976. *Use of Waste Sulfate For Remedial Treatment of Soils, Volume I, Discussion of Results*. U.S. Department of Transportation, Federal Highway Administration. August.

[138] Land reclamation efforts generally attempt to restore lands adversely affected by human activity to their original state.

[139] Keystone Cement Company, *op. cit.*

[140] Libicki, J., 1984. *Reclamation in Mountains, Foothills, and Plains: Doing it Right*. 9th Annual Meeting of the Canadian Land Reclamation Association. August 21. Canada.

drainage and precipitated iron from the run-off water.[141] This treatment method may also help reduce seepage of water from the mine.[142] Specific quantities of CKD and water treated were not provided in the literature, and EPA has not found more recent accounts of CKD use in mine reclamation.

8.2.4 Agricultural Applications

CKD, like agricultural lime, is alkaline and contains a number of essential plant nutrients. Because of these parallel characteristics, CKD has been used as an agricultural soil amendment for a number of years. For example, in the mid-seventies, many U.S. cement manufacturers reported that local farmers would occasionally visit their plants and haul away truckloads of kiln dust to spread on their fields.[143] To better understand the advantages and limitations of CKD as an agricultural amendment, numerous studies (cited below) have been conducted. These studies, many of which took place outside of the United States, have sought to determine such factors as the fertilizer equivalence and the lime equivalence of CKD, so that optimal CKD application rates could be determined. The use of CKD as fertilizer and as a liming agent is discussed below.

Fertilizer

Respondents to the 1991 PCA Survey and §3007 requests indicated that 11.7 percent of the CKD used beneficially was as a soil amendment, some or all of which probably included use as a fertilizer. CKD possesses significant fertilizer potential, particularly because of its high potassium content. It has been used to this end at state and local levels in Ohio, Illinois, and Pennsylvania because it provides savings over substitute products.[144] Researchers have suggested that a 0.9 metric-ton-per-acre (one-ton-per-acre) application of CKD would meet the initial potassium requirement for corn on many soils.[145] Soil scientists have also suggested that other key plant nutrients contained in CKD, such as calcium, phosphorus, and zinc, might be beneficial in some fertilizer applications.[146,147]

Numerous agricultural studies have been conducted to address specific applications of CKD as a fertilizer. In Russia and Poland, several studies found CKD to be an acceptable and inexpensive fertilizer for potatoes. Unlike most inexpensive potassium fertilizers, which contain high amounts of undesirable chloride, the CKD used in this study had essentially no chloride.

---

[141] Davis, T.A., *et al.*, 1975, *op. cit.*

[142] *Ibid.*

[143] *Ibid.*

[144] Personal communication with Marc Saffley, Soil Conservation Service (SCS), November 18, 1992.

[145] Anonymous, 1981. *CKD Use as Lime-Potash Fertilizer.* Farm Chemicals. April.

[146] *Ibid.*

[147] Mettauer, H. and A.P. Conesa, 1981. *Agronomic Value of Residual Cement Dust.* Comptes Rendus des Seances de l'Academie d'Agriculture de France. Volume 67, Number 9. pp. 772-781.

Also, the sulfate in the dust led to a higher starch content in potatoes.[148] Dutch researchers found that comparable yields of oats were achieved when CKD versus limestone and K_2SO_4 were used as fertilizer. Mixed peas-and-oats crops fertilized with kiln dust contained slightly more protein than crops grown with KCl fertilizer. In comparison to KCl-fertilized crops, the dust was also found to yield fodder containing more starch, and sugar beets containing more sugar.[149] In a Czechoslovakian study, pot experiments using cereals and sunflower as test crops showed that CKD was similar in effect to a potassium fertilizer.[150]

Before using CKD as fertilizer, however, it may be useful to treat it in some manner. For example, dry CKD is easily wind blown, and some form of binding (e.g., pelletizing) may be desirable. A Russian patent describes the preparation of granules by rolling the dust in water. A rotary unloader can be used for this purpose, after which the granules are treated with CO_2 to make them non-hygroscopic[151] and mechanically strong. Other treatment methods may be used to modify the chemistry of CKD-based fertilizer to meet specific soil and crop needs. For example, a Russian group used chlorination roasting to raise the K_2O content of kiln dust to over 20 percent.[152] Indian researchers developed a method to recover about 16.5 kilograms of potassium sulfate per metric ton (15 kilograms per ton) of coarse CKD. The recovered potash salts reportedly were pure enough to be used as fertilizer for crops such as potatoes and tobacco.[153] Similarly, the potassium sulfate recovered by the Dragon Products recovery scrubber (described in Section 8.1.3) is also reportedly pure enough for use as fertilizer.[154] Dragon Products currently has an agreement with a wholesaler to purchase the by-product.

In addition to pretreating CKD, it may also be worthwhile to blend CKD with other fertilizer ingredients. For example, the magnesium content in CKD must be supplemented from another source to achieve the required magnesium to calcium ratio for plant growth.[155,156] Other examples are highlighted below.

- A Russian patent describes a process in which kiln dust is mixed with nitric acid-phosphate extract to yield an N-P-K fertilizer.[157]

---

[148] Davis, T.A., *et al.*, 1975, *op. cit.*

[149] *Ibid.*

[150] Kulich, J. and A. Ragas, 1973. *Furnace Dusts from Cement Works as a Source of Available Nutrients.* Pol'nohospodarstvo. Volume 19, Number 2. pp. 113-121.

[151] Hygroscopic materials readily take up and retain moisture.

[152] Davis, T.A., *et al.*, 1975, *op. cit.*

[153] Chari, N.R. and D.K. Sahu, 1980. *Studies on the Feasibility of Recovery of Potassium Salts from CKD.* Fertilizer Technology. Volume 17. pp. 69-70.

[154] Anonymous, 1991. *Chloride-free Potash Fertilizer from Waste SO_2 and CKD.* Phosphorus and Potassium. July-August. p. 48.

[155] CKD is high in calcium, but contains relatively little magnesium.

[156] Personal communication with Hillary Inyang, Professor, University of Wisconsin, November 16, 1992.

[157] Davis, T.A., *et al.*, 1975, *op. cit.*

- French researchers have suggested that CKD mixed with distillery sludge may yield a material having a beneficial effect on crop yield and plant composition.[158]

- A Canadian investigation found that CKD could enrich a slurry of swine manure by increasing the levels of extractable calcium and potassium. The CKD mixture also reduced odor levels.[159]

- Researchers at Penn State University have suggested that CKD could be used to produce a lime-potash fertilizer containing 35 percent calcium oxide, six percent magnesium oxide, five percent potash, and four percent sulfur. With adequate quality control, the product was projected to be worth $33 to $39 per metric ton ($30 to $35 per ton) as fertilizer.[160]

Use of CKD as a fertilizer may be of benefit to the physical characteristics of the soil as well. A French study analyzed the effects of CKD on soil structure and infiltration and its value as an amendment and fertilizer for rye grass. Based on laboratory, pot, and field experiments, the study concluded that CKD could be a useful fertilizer and soil amendment. The study documented no heavy metal toxicity to plants at normal application rates and suggested the possible use of CKD as a replacement for gypsum in the treatment of saline soils.[161]

Although there has been a considerable amount of research conducted on CKD use as a fertilizer, existing applications of CKD for this purpose have been mostly anecdotal, and there is only limited evidence that commercial CKD use as a fertilizer is growing significantly. In addition, the Soil Conservation Service (SCS), an authority on agricultural soils, is not conducting any research on CKD.[162] Nonetheless, N-Viro Energy Systems claims that N-Viro Soil has resulted in substantial savings (more than $42 per acre) to farmers by reducing chemical fertilizer costs and by increasing yields on crops such as soybeans, corn, and alfalfa.[163] In 1990, an Iowa farmer reported successful use of sewage sludge and CKD as fertilizer as an alternative to conventional agricultural chemicals.[164] As discussed previously, Dragon Products expects to market one of its CKD recovery scrubber by-products as a potassium sulfate (potash)

---

[158] Mettauer, H. and A.P. Conesa, 1981, *op. cit.*

[159] Barrington, S.F. and A.F. MacKenzie, 1989. *Enrichment of Swine Manures through CKD Incorporation.* Biological Wastes. Volume 29, Number 1. pp. 1-10.

[160] Anonymous, 1981. *CKD Use as Lime-Potash Fertilizer.* Farm Chemicals. April.

[161] Mettauer, H. and A.P. Conesa, 1981, *op. cit.*

[162] Personal communication with Marc Saffley, Soil Conservation Service (SCS), November 18, 1992.

[163] Anonymous, 1992. *N-Viro Achieves Record Year.* PR Newswire. February 19.

[164] Looker, D., 1990. *Boone Couple Adds Fuel to Sustainable Ag Debate.* Des Moines Register. January 10. Volume 141, number 171. p. 1A+.

fertilizer.[165] However, the amount of potash recovered from CKD for fertilizer applications is currently insignificant in comparison to production from traditional sources.[166]

Liming Agent

As mentioned briefly above, CKD has significant potential as a liming agent. However, the effectiveness of CKD relative to agricultural lime is a subject of some dispute. According to one source, CKD performed as well as lime in raising pH on a weight basis in tests on certain soil types. However, in other tests, it took one and a half times as much CKD as lime to achieve equivalent results.[167] Research at the USDA station in Beltsville, Maryland, found that CKD had about 80 percent of the soil neutralizing capacity of lime and about the same liming qualities as pulverized limestone.[168] Studies in Latvia showed that kiln dust could fully replace lime to treat acidic soils to grow sugar beets or corn, and the dust could partially replace lime for growing potatoes and rye.[169] An Australian study found that CKD was effective in neutralizing acid soils, and suggested that if given a choice of limestone alternatives, the selection should be based on the relative costs of the purchase, transport, and application of the various materials.[170]

Based on responses to the 1991 PCA Survey and §3007 requests, use of CKD as a liming agent accounted for 5.6 percent of the CKD that went off site for beneficial use, and less than 0.5 percent of the gross CKD generated in 1990. Other documentation reports that CKD was being marketed and used as an agricultural lime on a regional basis in New York in the mid-eighties.[171,172] It is not clear what limitations or benefits were encountered from this activity.

8.2.5 Livestock Feed Ingredient

The alkaline properties of CKD have given rise to strong interest in the past in using CKD as a feed ingredient in livestock diets. In performing research on this application, however, the presence and effects of various trace metals, such as arsenic, barium, cadmium, chromium,

---

[165] Anonymous, 1991. *Chloride-free Potash Fertilizer from Waste SO_2 and CKD.* Phosphorus and Potassium. July-August. p. 48.

[166] Anonymous, 1991. *Potash Mining in Alsace, France.* Phosphorus and Potassium. September-October. p. 21.

[167] Anonymous, 1980. *Supplementing Ruminant Feeds with CKD Improves Livestock Performance, According to Agriculture Canada.* Feedstuffs. June 2. p. 38.

[168] Davis, T.A., *et al.*, 1975, *op. cit.*

[169] *Ibid.*

[170] Dann, P.R., B.S. Dear, and R.B. Cunningham, 1989. *Comparison of Sewage Ash, Crushed Limestone, and CKD as Ameliorants for Acid Soils.* Australian Journal of Experimental Agriculture. Volume 29. pp. 541-549.

[171] Naylor, L.M., J.C. Dagneau, and I.J. Kugelman, 1985. *CKD - A Resource Too Valuable to Waste?* Proceedings of the Seventeenth Mid-Atlantic Industrial Waste Conference on Industrial and Hazardous Wastes. June 23. pp. 353-366.

[172] Naylor, L.M., E.A. Seme, and T.J. Gallagher, 1986. *Using Industrial Wastes in Agriculture.* BioCycle. February. pp. 28-30.

lead, mercury, and selenium, have been regarded with concern.[173] Although international interest in the use of CKD for livestock feed has been relatively high, as of the mid-eighties, U.S. regulatory agencies forbade the use of CKD in the diets of animals destined for human consumption.[174,175] Under interstate commerce regulations, the FDA has not approved the use of CKD as a livestock feed ingredient. If the meat from an animal fed with CKD does not leave the state the animal lived in, however, this would not violate FDA requirements. Therefore, it is possible for some animals to be fed CKD, but the FDA is not aware of this occurring.[176] According to an FDA representative, no approval requests are currently being processed for CKD use as an animal feed, though occasional inquiries are received.[177]

Experiments conducted on steers and lambs in the late seventies revealed that diets containing 3.5 percent CKD, with and without supplemental protein, provided better growth results than diets without CKD. Further, carcasses from steers fed kiln dust were superior to those of other steers (e.g., they had more fat over the rib, a higher marbling score, and "graded" higher).[178] An analysis of the complete diets, in correlation with kidney and liver tissues, showed that there was no undesirable accumulation of elements such as arsenic, cadmium, lead, or selenium.[179,180] The results of the experiment were attributed to the neutralizing effect of CKD on rumen acids in the animals' gastrointestinal tracts, the presence of macro and trace mineral elements, and the possible increased mineral availability afforded by CKD.[181] Similar research has not produced findings of significantly elevated levels of heavy metals, or any cases of toxicity, in the animals studied. Further, one study concluded that the long-term feeding of CKD to steers did not elevate metal levels sufficiently to cause any real concern. According to one source, based on World Health Organization standards, meat from these steers would be of little concern in a well-balanced diet.[182] A Russian study found that CKD fed to cattle increased

---

[173] U.S. Department of Agriculture, 1979. Letter from William E. Wheeler, Research Animal Scientist, Nutrition, to John P. Lehman, Hazardous Waste Management Division, Office of Solid Waste, U.S. EPA. February 23.

[174] Wheeler, W.E., 1981. *Variability in Response by Beef Steers to CKD in High Concentrate Diets.* Journal of Animal Science. March. Volume 52. pp. 618-627.

[175] Bush, R.S. and W.G. Nicholson, 1985. *The Effect of CKD on Tissue Accumulation of Trace Minerals in Steers.* Canadian Journal of Animal Science. June. Volume 65. pp. 429-435.

[176] Personal communication with Dr. Donna Waltz, Center for Veterinary Medicine, Animal Feeds Division, FDA, November 1992.

[177] *Ibid.*

[178] Wheeler, W.E. and R.R. Oltjen, 1979. *CKD in Complete Diets for Finishing Steers and Growing Lambs.* Journal of Animal Science. March. Volume 48. pp. 658-665.

[179] Wheeler, W.E., 1978. *CKD: A Potential Feed Ingredient for Livestock.* Cereal Foods World. Volume 23. pp. 296-297, 299, 312.

[180] Wheeler, W.E. and R.R. Oltjen, 1979, *op. cit.*

[181] *Ibid.*

[182] Bush, R.S. and W.G. Nicholson, 1985, *op. cit.*

body weight gain and reduced the percentage of premature culling of stock.[183] Similar experiments with rats and swine during this same period showed a positive growth effect like that found in cattle.[184,185] Canadian experiments showed weight gain rates of 22 percent in sheep and nine percent in cattle fed with CKD. The best results were with finishing lambs and young Holstein heifers.[186]

Researchers have also found that feed supplemented with CKD did not consistently stimulate growth of rats, mice, hamsters, and lambs.[187,188,189] Italian researchers found that while CKD had no adverse effect on the health of lambs, it also had no significant effect on rate of weight gain, feed intake, feed conversion efficiency, or carcass weight.[190] Similarly, additional studies of steers, yearling beef heifers, dairy cows, and lambs also indicated an inconsistent or nonexistent growth response to CKD.[191,192,193,194,195,196] This variability in response appeared to be the result of variability in the composition of CKD between different

---

[183] Karadzhyan, A.M., A.G. Chirkinyan, L.V. Efremova, and A.A. Evoyan, 1982. *Effect of CKD on Growth and Development of Young Cattle.* Trudy Erevanskogo Zootekhnichesko-veterinarnogo Instituta. Number 53. pp. 10-14.

[184] Roginski, E.E. and W.E. Wheeler, 1978. *A Growth Effect of Georgia CKD in Rats.* Federation Proceedings. Volume 37. p. 404.

[185] Newton, G.L. and O.M. Hale, 1979. *CKD and Carboxylin as Feed Additives for Swine.* Journal of Animal Science. October. Volume 49. pp. 908-914.

[186] Anonymous, 1980. *Supplementing Ruminant Feeds with CKD Improves Livestock Performance, According to Agriculture Canada.* Feedstuffs. June 2. p. 38.

[187] Galvano, G., A. Lanza, L. Chiofalo, and M. Mal'an, 1982. *CKD as a Mineral Source in Feeding Ruminants.* World Review of Animal Production. Volume 18, Number 4. pp. 63-71.

[188] Roginski, E.E. and W.E. Wheeler, 1979. *The Response of Monogastric Species to CKD in the Diet.* Federation Proceedings. Volume 38. p. 614.

[189] Zinn, R.A., R.A. Lovell, D.R. Gill, F.N. Owens, and K.B. Poling, 1979. *Influence of CKD on Animal Performance and Nutrient Availability.* Journal of Animal Science. Volume 49. p. 422.

[190] Galvano, G., A. Lanza, L. Chiofalo, and M. Mal'an, 1982, *op. cit.*

[191] Anonymous, 1980. *Supplementing Ruminant Feeds with CKD Improves Livestock Performance, According to Agriculture Canada.* Feedstuffs. June 2. p. 38.

[192] Ward, G.M., C.A. Olds, D.D. Caveny, and G.A. Greathouse, 1979. *CKD in Finishing Lamb Diets.* Journal of Animal Science. September. Volume 49. p. 637.

[193] Noller, C.H., J.L. White, and W.E. Wheeler, 1980. *Characterization of CKDs (Fed to Animals) and Animal Response.* Journal of Dairy Science. November. Volume 63. pp. 1947-1952.

[194] Zinn, R.A., R.A. Lovell, D.R. Gill, F.N. Owens, and K.B. Poling, 1979. *op. cit.*

[195] Wheeler, W.E., 1981, *op. cit.*

[196] Felix, A., D.R. Rao, C.B. Chawan, and P.I. Ikem, 1980. *Effect of CKD on Nutrient Digestibility in Sheep.* Annual Research Report: School of Agriculture, Alabama A&M. pp. 103-109.

sources and even within the same source.[197] Other researchers agreed that the variable composition of CKD makes it somewhat unreliable as a feed additive.[198] The feed mixture fed to animals could also be a source of these varying results. For example, diets containing alfalfa hay appeared to be unaffected by CKD supplementation because they already had sufficient buffering capacity.[199]

Along with inconsistent results, some research has indicated potentially adverse impacts from using CKD as a livestock feed amendment. German researchers found that in instances where CKD was fed to cattle, weight increases were up to 14 percent lower than would be expected. In one case, an extremely low weight gain required a reduction of the percentage of CKD fed to the animal.[200] A study of CKD fed to rainbow trout showed no significant difference in growth rate or feed conversion. It also showed an increase in selenium concentrations in the fishes' livers, though no fish died and there were no pathological signs.[201] CKD fed to swine depressed body weight gain and apparently interfered with normal bone metabolism to the extent of causing bone lesions on the humerus.[202] CKD fed to broiler chicks caused no significant improvement in growth rate or feed utilization when fed at low levels, and caused severe rickets when fed at high levels (five to nine percent).[203]

The use of CKD as a feedstock additive in animals used for human consumption does not appear to be viable in the United States in the immediate future, despite the fact that most research has reported positive or neutral effects.

8.2.6 Lime-Alum Coagulation in Water Treatment

In water treatment, CKD can be substituted for lime in coagulation processes.[204] CKD was reportedly used in 1975 in Oregon as a partial and total replacement for lime in the preparation of alum floc to remove turbidity from water. Use of kiln dust was successful in

---

[197] Noller, C.H., J.L. White, and W.E. Wheeler, 1980, *op. cit.*

[198] Hogue, D.E., P.J. Van Soest, J.R. Stouffer, G.H. Earl, W.H. Gutenmann, and D.J. Lisk, 1981. *CKD as a Selenium Source in Sheep Rations.* The Cornell Veterinarian. January. Volume 71. pp. 69-75.

[199] Noller, C.H., J.L. White, and W.E. Wheeler, 1980, *op. cit.*

[200] Flachowsky, G., H.J. Lohnert, G. Stubedorff, E. Flachowsky, G. Staupendahl, and A. Hennig, 1982. *The Use of Portland CKD in the Feeding of Fattening Bulls.* Archiv fur Tierernahrung. Volume 32. pp. 93-98.

[201] Rumsey, G.L., W.H. Gutenmann, and D.J. Lisk, 1981. *CKD as an Additive in the Diets of Rainbow Trout.* Progressive Fish-Culturist. Volume 43. pp. 88-90.

[202] Pond, W.G., D.A. Hill, C.L. Ferrell, and L. Krook, 1982. *Bone Lesions in Growing Swine Fed 3 Percent CKD as a Source of Calcium.* Journal of Animal Science. January. Volume 54. pp. 82-88.

[203] Veltmann, J.R. and L.S. Jensen, 1979. *Effect of Georgia CKD on Broiler Chick Performance.* Poultry Science. Volume 58. p. 1027.

[204] Eger, V.G. and O.N. Mandryka, 1984. *The Possibility of Using Bentonite Clay for Purification of Wastewaters From Apatite Processing.* Journal of Applied Chemistry of the USSR. Volume 57. pp. 2420-2422.

neutralizing the water and in improving flocculation.[205] More recent examples citing the use of CKD for this purpose have not been found.

8.2.7 Construction Applications

Although CKD is not typically blended into the finished cement product at the facility, CKD has been found in some construction applications to perform well when blended with cement and aggregates to make concrete. In these instances, CKD is often blended together with other additives, such as fly ash and/or lime. The concrete made from CKD blending can be used for purposes such as road base construction. There have been a number of studies on the suitability of concrete made with CKD for this and other construction applications.

Blending with Portland Cement

A large number of studies have demonstrated that CKD can successfully replace a portion of portland cement in making concrete. Various blends have been researched, using only CKD as an additive, and using CKD with other additives. According to responses to the 1991 PCA Survey and §3007 requests, about 2.7 percent of the CKD that was sold or given away in 1990 was used as a materials additive.

CKD as the Only Blending Agent

Some research shows that CKD can replace over 50 percent of prescribed portland cement for certain concrete applications. A study of concrete made with five percent CKD found that the properties of CKD concrete were almost the same as those of normal concrete mixes.[206] Additional research demonstrated that a five percent replacement of portland cement with CKD did not appreciably affect the freeze-thaw durability of cement.[207] Another study of concrete made with various proportions of CKD concluded that, while replacing cement with CKD generally increased water demand and decreased concrete strength, CKD could replace cement by up to 15 percent without causing significant strength loss.[208] Martin Marietta Corporation has submitted a patent application for concrete blocks containing 10 to 60 percent CKD. The blocks reportedly show improved compressive strength compared to blocks without CKD.[209]

Coupled with the positive results outlined above, the use of CKD as a replacement for portland cement has also been shown to have limitations. According to some studies, excessive quantities of CKD in cement (amounts vary depending on CKD composition) will decrease the strength and

---

[205] Davis, T.A., *et al.*, 1975, *op. cit.*

[206] Ramakrishnan, V., 1986. *Evaluation of Kiln Dust in Concrete.* American Concrete Institute. pp. 821-839.

[207] Ramakrishnan, V. and P. Balaguru, 1987. *Durability of Concrete Containing CKD.* American Concrete Institute. pp. 305-321.

[208] Ravindrajah, R.S., 1982. *Usage of CKD in Concrete.* International Journal of Cement Composites and Lightweight Concrete. May. Volume 4, Number 2. pp. 95-102.

[209] Martin Marietta Corporation, date unknown. *Poured, Moulded, or Pressed Concrete Blocks Contain Aggregate, Cement, and CKD.*

workability of the cement product.[210,211] CKD also tends to retard setting time.[212,213,214] The high levels of sulfate and alkali contained in certain dusts may also have an undesirable effect on concrete durability.[215] One study showed that alkali-aggregate reactivity in cement made with CKD caused greater expansion at six months than ordinary cement.[216] In a CKD treatment (alkali removal) and use investigation, however, the U.S. Bureau of Mines concluded that concrete made from either sintered or melted CKD exhibited strength equal to or greater than ASTM standards.[217]

CKD as a Co-Blending Agent

Some of the limitations of CKD as a concrete ingredient may be overcome by incorporating additional materials, such as fly ash or slag, along with the dust. A 1980 study found that pozzolanic[218] concrete containing CKD and fly ash had the property of autogenous[219] healing and concluded that such concrete was potentially useful as road base and merited further development.[220] Subsequent studies showed that the addition of either slag or fly ash to cement-CKD blends resulted in better or similar characteristics (strength, setting time, and workability) in comparison to ordinary concrete.[221] Fly ash also reportedly acts to inhibit the expansion resulting from alkali-aggregate reactivity.[222] This effect might yield a higher alkali content in portland cement, allowing increased CKD recycling at applicable kilns if the ASTM standard were changed. Little information has been found on this topic.

---

[210] Bhatty, M.S.Y., 1985. *Use of CKD in Blended Cements: Alkali-Aggregate Reaction Expansion.* World Cement. December. Volume 16, number 10. pp. 386, 388-390, 392.

[211] Ravindrajah, R.S., 1982, *op. cit.*

[212] Bhatty, M.S.Y., 1984. *Use of CKD in Blended Cements.* World Cement. May. Volume 15, Number 4. pp. 126-134.

[213] Ramakrishnan, V., 1986, *op. cit.*

[214] Ravindrajah, R.S., 1982, *op. cit.*

[215] Valley Forge Laboratories, Inc., 1982. *Kiln Dust-Fly Ash Systems for Highway Bases and Subbases.* U.S. Department of Transportation and U.S. Department of Energy. September.

[216] Bhatty, M.S.Y., 1984, *op. cit.*

[217] Wilson, R.D. and W.E. Anable, 1986, *op. cit.*

[218] A pozzolan is a material rich in silica or silica and aluminum that is chemically inert and possesses little or no value as a cementing agent, but, when in a finely divided form and in the presence of water, will react with calcium hydroxide to form compounds possessing cement-like properties. The most commonly available pozzolan in use in the United States is fly ash (Valley Forge Laboratories, 1982, p. 7).

[219] Originating or derived from a source within the same subject.

[220] Miller, C.T., D.G. Bensch, and D.C. Colony, 1980. *Use of CKD and Fly Ash in Pozzolanic Concrete Base Courses.* Transportation Research Record. pp. 36-41.

[221] Bhatty, M.S.Y., 1984, *op. cit.*

[222] Bhatty, M.S.Y., 1985, *op. cit.*

Some research has moved into more commercial stages of development. For example, the U.S. Patent Office has received applications and, in some cases, issued patents for the use of various blends of CKD in concrete. Examples of patent applications include those for the following products:

- A high iron hydraulic cement manufactured from red mud and CKD by calcining them with gypsum, lime, and alumina. This composition reportedly sets rapidly, is stronger in compression than portland cement, is more tolerant to the presence of alkali oxides, and has enhanced bonding to steel reinforcement. It is also low in cost due to the use of waste materials and the lower fusion temperature used in manufacturing;[223]

- Cement containing blast furnace slag, CKD, and/or calcium carbonate, and optionally, gypsum. This composition is reportedly suitable as a partial replacement for portland cement, is less expensive, and forms concretes with better setting times and compressive strengths;[224]

- A mixture of fly ash or pozzolan, CKD, aggregate, and water that, when compacted and reacted at ambient temperature, can be used as stabilized base material to underlie road surfacing. This composition reportedly minimizes the use of energy-intensive materials such as lime and asphalt;[225] and

- A blend of portland cement, CKD, and phosphogypsum for use in producing air-filled concrete panels.[226]

The use of CKD as a blending ingredient for concrete is apparently being actively researched and marketed. Ongoing studies of applications for CKD-blended concrete may provide new alternative uses in the future.

Use as a Road Base Material

According to the 1991 PCA Survey responses and §3007 requests, approximately 1.2 percent of the CKD used beneficially in 1990 was used for road base construction. This application of CKD has been researched since the 1970s. A study in the late seventies by the Transport and Road Research Laboratory in the United Kingdom concluded that freshly-produced CKD has little application in road making, but that well-weathered CKD could be useful as bulk fill.[227] More recently, however, research studies have demonstrated broader

---

[223] Regents of the University of California, 1986. *High Iron Hydraulic Cement Manufactured from Red Mud and CKD.* PCT Patent Application Number WO--86-05773. October 9.

[224] Standard Concrete Material, Inc., 1983. *Cement Composition as Substitute for Portland Cement Containing Blast Furnace Slag, CKD, and/or Calcium Carbonate, and Optionally Gypsum.* PCT Patent Application Number WO--83-01443. April 28.

[225] Nicholson Realty, date unknown. *Cementitious-hardening Paving Base Composition Using Waste Materials.*

[226] Bryansk Technical Institute, date unknown. *Solution for Building Applications Containing Portland Cement, CKD, and Phosphogypsum.*

[227] Sherwood, P.T., L.W. Tubey, and P.G. Roe, 1977. *The Use of Waste and Low-Grade Materials in Road Construction.* Transport and Road Research Laboratory. Crowthorn, England.

applications for CKD in road construction. Saudi Arabian researchers, for example, found that sand stabilized with CKD could be utilized for base materials in highway construction.[228]

CKD blending has also been investigated for use in road construction. For example, the U.S. Department of Transportation and the U.S. Department of Energy tested the effectiveness of substituting CKD for hydrated lime in lime-fly ash-aggregate road base systems. CKD was found to perform well in pozzolanic road base compositions involving some form of lime-fly ash stabilization. CKD generally yielded mixes with high resistance to freezing and thawing and some mixes developed early strength, possibly extending the normal cut-off dates for late season construction. The study found that, with few exceptions, fresh CKD worked with nearly any fly ash to produce strengths as high or higher than those observed with commercial hydrated lime and fly ash, although larger CKD quantities were required compared to normal hydrated lime to achieve the same strength. The study also found that aged CKD from stockpiles had a lower free lime content and resultant poor reactivity. Additionally, CKD from dry process plants tended to produce the highest strength concrete. Total dusts containing both fine and coarse CKD were better than separated CKD. The study concluded that, owing to its calcium oxide or unreacted lime content, CKD may be used in place of hydrated lime or portland cement as a pozzolanic road base material.[229]

Research has also demonstrated that some CKD blends do not perform satisfactorily. For example, a study by the Florida Institute of Phosphate Research concluded that a mixture of phosphogypsum and CKD was not useful for road construction.[230] CKD has an inherent propensity to degrade or react in place. This instability can lead to differential settlement problems. Further, CKD has no shear strength due to its fine-grained particle size. The shear strength due to cohesion alone is minute unless the dust is modified for use. The fine-grained character of CKD introduces the additional problem of erodability and sediment transport.[231]

The use of CKD as a road base material appears to have developed to a commercial stage and to be of continued interest, though quantities used for this purpose are currently small. Depending on the project, a state can specifically require the use of CKD or a contractor may request it. One explanation for the limited use of CKD as a road sub-base may be that new construction calls for flexible pavements with drainable bases. CKD, in contrast, is rigid and has a low permeability. In addition, less new sub-base construction is currently taking place, giving way to increased sub-base rehabilitation instead. Nonetheless, CKD provides an economically viable alternative to substitute products, such as fill materials and lime, because it is more economically competitive. Transportation costs can, however, add substantially to the price and ultimately drive the market for the dust.[232]

---

[228]Baghdadi, Z.A. and M.A. Rahman, 1990. *Potential of CKD for the Stabilization of Dune Sand in Highway Construction.* Building and Environment. Volume 25, Number 4. pp. 285-289.

[229] Valley Forge Laboratories, Inc., 1982, *op. cit.*

[230] May, A., J.W. Sweeney, and J.R. Cobble, 1983. *Use of Florida Phosphogypsum in Synthetic Construction Aggregate.* Florida Institute of Phosphate Research Publication Number 01-008-026.

[231] Personal communication with Hillary Inyang, Professor, University of Wisconsin, November 16, 1992.

[232] Personal communication with Mike Rafalowski, DOT-FHA, November 16, 1992.

Despite the apparent economic advantages of using CKD as a road base material, the subject does not appear to have attracted much continuing attention. Neither the Department of Transportation (DOT) nor the Federal Highway Authority is funding research on the subject, nor does DOT maintain data records on the use of CKD in this manner.[233]

8.2.8 Sanitary Landfill Daily Cover

Because of the fine nature of CKD particles, the use of CKD as a landfill cover can probably only be achievable when it is blended with some other material. N-Viro Soil, for example, is used as a daily cover for a number of municipal landfills with contracts set for up to 15 years beginning in 1990. N-Viro Soil is being used for this application at the rate of 9 to 104 dry metric tons (10 to 115 dry tons) per day per landfill, depending on the landfill.[234,235]

8.2.9 Mineral Filler

According to an early source, CKD has been used as a mineral filler for bituminous paving materials and asphaltic roofing materials. It has also been suggested as a filler for plastics and for asphaltic products such as insulating board, concrete expansion strips, and sound deadening material.[236] EPA's research has not yielded more recent discussions of such applications.

8.2.10 Lightweight Aggregate

In the mid-seventies there was at least one process under development to use CKD in the manufacture of lightweight aggregate.[237] However, EPA's research has not yielded more recent discussions of this application.

8.2.11 Glass Making

Researchers have reported success in the use of CKD to make glass for which color and high chemical stability are not essential considerations. According to this finding, CKD can serve as a partial replacement for soda ash in the manufacture of green glass because it increases the rate of sulfate decomposition, the main cause of foaming in glass baths.[238] The developmental stage of this technology is uncertain, and EPA's research has not yielded more recent discussions of the use of CKD in glass making.

8.3 ON-SITE LAND DISPOSAL

---

[233] *Ibid.*

[234] N-Viro Energy Systems, 1991, pp. 9-10, *op. cit.*

[235] Personal communication with Robert Bastion, Office of Water-Wastewater Enforcement, EPA, November 1992.

[236] Davis, T.A., *et al.*, 1975, *op. cit.*

[237] *Ibid.*

[238] *Ibid.*

Net CKD that is removed from the kiln system and not beneficially utilized is disposed, generally in landfills, piles, or ponds. In a landfill, CKD is generally disposed below grade (e.g., in mines, stopes, or quarries) and is sometimes buried between layers of earth. Piles are typically above-grade deposits of CKD. Submerged management of CKD in ponds accounts for only a small portion of on-site CKD management. As discussed in Chapter 4, responses to the 1991 PCA Survey and EPA observations during 1992 sampling activities demonstrate that the predominant CKD waste management practice at cement plants is disposal in a retired portion of the limestone quarry.

An alternative to these land disposal practices is to dispose CKD in an engineered landfill. Engineered landfills are typically constructed with environmental controls that are designed to contain wastes within the disposal unit. Monitoring of ground water and other environmental media in the vicinity of the landfill is often performed to ensure that the environmental controls are functioning properly. Daily operations are performed according to procedures that limit exposure of nearby populations to windblown dust and other potential hazards.

The remainder of this section discusses, in general terms, the design and operating practices frequently used at engineered landfills. The specifics of landfill design actually vary widely from site to site depending on numerous factors such as the intrinsic hazard of the waste; the requirements imposed by federal, state, and local regulations; the climate and hydrogeology of the site; the resource value of the underlying ground water; the proximity of nearby populations and endangered species; and the location of the site relative to sensitive environments such as floodplains, seismic impact zones, and wetlands.

Engineered landfills are designed with run-on control systems. Run-on from adjacent property can increase the amount of water percolating into the landfill and contribute to leachate formation; leachate is liquid that has percolated through the wastes and extracted dissolved or suspended materials. Run-on can be controlled through construction of diversion ditches, trench drains, and other devices. Typically, run-on control systems are designed to prevent flow onto the active portion of the landfill during the peak discharge from a 25-year storm. Well-designed landfills also have run-off control systems to prevent surface run-off from the site from entering nearby areas and streams. Run-off control systems are typically designed to collect and control the water volume resulting from a 24-hour, 25-year storm.

Engineered landfills are equipped with components that contain and remove leachate. Liner systems are frequently installed prior to placement of wastes in landfills to prevent leachate from entering ground water. Liner systems are constructed with low-permeability soils and/or synthetic materials that are sloped to divert the leachate to underdrain pipes, which collect the leachate for treatment; these are known as leachate collection systems (LCS). Liner configurations frequently used include a single layer of compacted clay; a flexible membrane liner (FML) made of high density polyethylene (HDPE) or other material underlying a LCS; a "composite" liner system consisting of a LCS and FML overlying a two- to three-foot layer of compacted clay; and a "triple" liner system consisting of two FMLs with LCSs above and between them, overlying a layer of compacted clay. Well-designed LCSs maintain less than a 30-cm depth of leachate over the liner. All components of the liner and LCS must be constructed of materials that have appropriate chemical properties and sufficient strength and thickness to prevent failure due to pressure gradients, physical contact with the waste and leachate, and other stresses.

Landfills equipped with leachate collection systems must also have mechanisms in place for leachate treatment and disposal. Frequently, collected leachate is recirculated back into the landfill. Alternatively, leachate may be treated on site and then discharged to a surface water body. A third alternative is to discharge the leachate to a municipal wastewater treatment plant with or without prior treatment, depending on the characteristics of the leachate and the requirements of the sewage treatment plant. Many different types of biological and physical/chemical treatment technologies are available for treating leachate prior to discharge to surface water or a wastewater treatment plant. Discharges of collected leachate and run-off to surface water must be performed in accordance with National Pollutant Discharge Elimination System (NPDES) requirements established pursuant to Section 402 of the Clean Water Act.

Ground-water monitoring is frequently conducted to detect leachate releases from landfills and evaluate the degree and significance of resultant ground-water contamination. Effective monitoring well systems must comprise a sufficient number of appropriately located wells able to yield ground-water samples that represent the quality of background ground water and the quality of ground water downgradient of the fill area. The number, spacing, and depths of monitoring wells are based on site-specific characteristics. Samples are collected periodically and analyzed for hazardous constituents or for parameters that indicate that a release has occurred. Statistical analysis of the samples is performed to help determine whether a release has occurred and the nature and extent of the contamination. Operators of some landfills also conduct monitoring of surface water, soils, and air.

If contamination is significant, corrective action is taken to clean up the environment to the extent feasible. Many different types of ground-water corrective action technologies are available, including source controls to minimize further releases (e.g., excavation of the waste, placing a low-permeability cap over the fill area); ground-water recovery wells that remove ground water from the subsurface and treat it to reduce contaminant levels; and slurry walls, which restrict ground-water flow and thereby minimize further spread of the contamination. The technical feasibility, costs, and effectiveness of these technologies vary widely from site to site.

Closure and post-closure care are important components of environmentally protective landfill management. When a landfill (or a portion of the landfill) is filled to capacity, a final cover is installed to minimize infiltration and erosion. The cover may consist simply of vegetated top soil. More sophisticated covers also contain a liner made of polyvinyl chloride (PVC) or other synthetic material underlying a drainage collection system; "composite" cover systems also include a two-foot clay layer. The cover should be designed with a permeability less than or equal to the permeability of the bottom liner system or natural subsoils to prevent ponding at the bottom of the landfill. After the landfill is closed, post-closure care is conducted for many years. Post-closure care activities typically include maintenance of the integrity of the landfill cover, operation of the LCS, and monitoring of ground water.

A wide variety of additional design and operating features are practiced at landfills, including access controls (e.g., installation of fences to prevent public exposure to hazards), the use of daily cover (covering each day's fill with soil to prevent dust from blowing), and others. The degree of latitude that a landfill owner or operator may exercise in selecting among the environmental controls discussed above depends largely on the regulatory status of the landfill. Without federal or state requirements, the need for these controls depends on the characteristics of the waste and the environmental and exposure characteristics of the waste disposal site.

8.4 SUMMARY AND FINDINGS

This chapter has presented an overview of CKD management alternatives. The length of discussion allotted for the various technologies does not necessarily reflect EPA's views on their relative merits, but instead is a function of disparities in the availability of information. Moreover, the conclusions derived from these discussions are tentative and subject to reevaluation upon receipt of new information.

Although investigators have explored numerous alternative CKD management practices, the scope of practices being utilized commercially remains limited. The perceived economics of CKD management and familiarity with existing techniques may be limiting more widespread adoption of alternatives to CKD disposal. For example, though available technologies could allow nearly 100 percent of gross CKD to be recycled to the kiln, the capital cost of adopting this practice may seem excessive for many operators, especially given the absence of strong incentives to reduce the quantities of net CKD generated. EPA has examined in detail the economic feasibility of some of these alternative management practices. This analysis is presented in Chapter 9 of this report.

Exhibits 8-4 and 8-5 (on pages 8-43 to 8-46) summarize the alternatives discussed in this Chapter for minimizing CKD removal from the kiln system and for beneficially using CKD that is removed from the system. The exhibits indicate general characteristics of each alternative in terms of technical feasibility, environmental considerations, economic considerations, and trends in use. Overall findings with respect to these factors are discussed below.

Exhibit 8-4

Summary of Alternatives for Minimization of CKD Removal from the Kiln System

ALTERNATIVE	TECHNICAL FEASIBILITY			ECONOMIC CONSIDERATIONS			ENVIRONMENTAL CONSIDERATIONS	NOTES
	DEVELOPMENTAL STAGE	OPERATIONAL IMPACTS	OPERATIONAL COMPLEXITY	START-UP COSTS	OPERATING COST SAVINGS	NEW PRODUCTS		
Recovery Scrubbing	Pilot/ Limited Commercial	-Increased system efficiency -Versatile fuel choices	Moderate to High - However, no net increase of personnel is required	High	High - Investment payback expected in <5 yrs.	-Potassium sulfate potentially marketable as fertilizer -Distilled water	-Reportedly discharges only clean air and distilled water -Pilot plant is beginning to consume its backlog of dust previously generated -Reportedly removes 90 to 98 percent of the SO_2 in the flue gas	Reportedly improves kiln's particulate capture efficiency of CKD and unburned organics
Leaching with Water and Return to Kiln	Limited Commercial	-Sludge drying system required for dry kilns	Low	Low	Moderate	Leaching solution suitable as liquid potassium fertilizer	-Increased materials and energy efficiency -Less CKD to Disposal	-Leaching with hot water removes more alkali than leaching at ambient conditions
Fluid Bed Dust Recovery	Pilot	None Identified	High	High	High	Unusable dust may be of value as a fertilizer	-Increased materials and energy efficiency -Less CKD to Disposal -Other aspects unknown	In some cases, a binder may be required for pelletization of CKD
Leaching with KCl Solution and Return to Kiln	Theoretical/Bench	None Identified	Unknown	Unknown	Low to High	Unknown	-Increased materials and energy efficiency -Less CKD to Disposal -Other aspects unknown	Optimal leaching conditions were found at 70 to 80°C
Alkali Volatilization	Theoretical/Bench	None Identified	Unknown	Unknown	Low to High	Can yield cement product or cement additive	Unknown	Sintering is the primary method
Control of Gross CKD Generation Rates	Full Commercial	-Can decrease process stability -Can decrease product quality	Low	Low	Low	No	-Increased materials and energy efficiency -Less CKD to Disposal	-Primary control is to minimize turbulent conditions in kiln -Major process changes to reduce gross CKD would rarely be economically justifiable
Control of Raw Feed and Fuel Inputs to the Kiln	Full Commercial	Can decrease product quality	Low to Moderate	Low	Low to Moderate	No	-Increased materials and energy efficiency -Less CKD to Disposal	-Alternative raw feed sources limited -Use of alternate fuel can affect temperature profile of kiln and must be monitored -Hazardous waste fuels containing higher levels of chlorine can increase net CKD generation
Direct Return to Flame End	Full Commercial	-Can reduce flame temperature -Resuspends Dust	Low	Low	Low to High	No	-Increased materials and energy efficiency -Less CKD to Disposal	-Limited by reduced flame temperature that dust causes in burning zone -Causes continuous resuspension of dust

Direct Return to Mid-Kiln	Limited Commercial	None Identified	Low	Low	Low to High	No	-Increased materials and energy efficiency -Less CKD to Disposal -Can release fugitive dust	Difficulties can arise in mounting the sleeve

Exhibit 8-4 (continued)

Summary of Alternatives for Minimization of CKD Removal from the Kiln System

ALTERNATIVE	TECHNICAL FEASIBILITY			ECONOMIC CONSIDERATIONS			ENVIRONMENTAL CONSIDERATIONS	NOTES
	DEVELOPMENTAL STAGE[a]	OPERATIONAL IMPACTS[b]	OPERATIONAL COMPLEXITY	START-UP COSTS	OPERATING COST SAVINGS[c]	NEW PRODUCTS		
Direct Return with Raw Feed	Full Commercial	Some obstacles for wet slurry	Low	Low	Low to High	No	-Increased materials and energy efficiency -Less CKD to Disposal	Can return CKD either at kiln input or at blending stage
Pelletizing and Return to Kiln	Full Commercial	Reduced resuspension of dust	Unknown	Low	Low to High	No	-Increased materials and energy efficiency -Less CKD to Disposal	-Gives CKD necessary strength to withstand forces of being fired into flame -Avoids need for flame characteristic modification

[a] "Developmental Stage" describes the usage level at which the technology is being implemented, classified as Theoretical, Bench Scale, Pilot Scale, or in Limited Commercial or Full Commercial development.

[b] "Operational Impacts" describes effects of the technology on the kiln system or the clinker product.

[c] "Operating Cost Savings" provides a qualitative assessment of the operating costs savings likely to be realized through using a given technology, and is considered separately from start-up costs. Classes are low, moderate, and high, with many technologies ranging from low to high because savings depend upon the amount of net CKD that is returned.

Exhibit 8-5

Summary of Alternatives for Beneficial Utilization of CKD Removed from the Kiln System

ALTERNATIVE	DEVELOPMENTAL STAGE*	VALUE OF PRODUCT*	MARKET STATUS*			ENVIRONMENTAL CONSIDERATIONS	NOTES
			POTENTIAL DEMAND	CURRENT STATUS	APPARENT TRENDS		
Stabilization of Sewage Sludge	Full Commercial	High	High	Common	Growing	CKD may be dispersed in environment with unclear impacts	-Successfully marketed as a treatment agent under the names Stablesorb and N-Viro Soil -Municipality can save $13 per wet metric ton ($12 per wet ton) on sewage disposal
Sanitary Landfill Daily Cover	Full Commercial	High	High	Limited-Common	Growing	CKD is managed under controlled conditions	Most applications use CKD/sewage sludge blend
Stabilization of Oil Sludge	Full Commercial	Moderate	High	Common	Growing	CKD is dispersed in environment with unclear impacts	
Stabilization of Acid Wastes	Full Commercial	Moderate	High	Common	Growing	CKD is dispersed in environment with unclear impacts	
Stabilization of Miscellaneous Wastes	Full Commercial	Moderate	High	Common	Growing	CKD is dispersed in environment with unclear impacts	
Soil Stabilization	Full Commercial	Moderate	High	Common	Unknown	-CKD is dispersed in environment with unclear impacts -Helps reduce fugitive dust and erosion from soil	Decreases shifting and subsidence
Road Base	Full Commercial	Low	Moderate to High	Limited-Common	Growing	CKD is dispersed in environment with unclear impacts	Variable composition of CKD hinders reliability
Land Reclamation	Full Commercial	Low	High	Limited-Common	Unknown	CKD is dispersed in environment with unclear impacts	
Fertilizer	Full Commercial	Moderate	High	Limited-Common	Stable-Growing	-CKD is dispersed in environment with unclear impacts -Potential limitations for food chain crops	
Liming Agent	Full Commercial	Moderate	High	Common	Stable-Growing	-CKD is dispersed in environment with unclear impacts -Potential limitations for food chain crops	
Blending Agent with Portland Cement	Bench	Low - Moderate	Moderate	Limited-Common	Growing	CKD is dispersed in environment with unclear impacts	-Large percentages will decrease strength and workability, and retard setting time -Variable composition of CKD hinders reliability
Lime-Alum Coagulation in Water Treatment	Unknown	Unknown	Unknown	Unknown	Unknown	Unknown impact on treated water	
Blending Agent with Other Materials	Bench	Low - Moderate	Moderate?	Limited-Common	Growing	CKD is dispersed in environment with unclear impacts	-Variable composition of CKD hinders reliability -Adds autogenous healing to pozzolanic concrete

Exhibit 8-5 (continued)

Summary of Alternatives for Beneficial Utilization of CKD Removed from the Kiln System

ALTERNATIVE	DEVELOPMENTAL STAGE[a]	VALUE OF PRODUCT[b]	MARKET STATUS[c]			ENVIRONMENTAL CONSIDERATIONS	NOTES
			POTENTIAL DEMAND	CURRENT STATUS	APPARENT TRENDS		
Mineral Filler	Limited Commercial	Unknown	Unknown	Unknown	Unknown	Unknown	
Lightweight Aggregate	Unknown	Unknown	Unknown	Unknown	Unknown	CKD is dispersed in environment with unclear impacts	One process under development in the mid-seventies
Glass Making	Theoretical/Bench	Unknown	Unknown	Unknown	Unknown	Unknown	Successful when color and high chemical stability are not essential
Livestock Feed Ingredient	Theoretical/Non-commercial Pilot	Unknown	Unknown	Not believed to be used in U.S.	No Growth	CKD in diets of animals destined for human consumption is not permitted in U.S.	Variable composition of CKD hinders reliability

[a] "Developmental Stage" describes the usage level at which the technology is being implemented, classified as Theoretical, Bench Scale, Pilot Scale, or in Limited Commercial or Full Commercial development.

[b] Value of product is qualitatively ranked relative to anticipated value of other beneficial uses (highly speculative).

[c] "Market Status" is comprised of three categories: Potential Demand, based on a qualitative estimate of the user market; Current Status, based on available information about current CKD demand for a given use; and Apparent Trends, based on a qualitative assessment of current demand trends.

8.4.1 Technical Feasibility

Most of the management alternatives discussed above are technically feasible to at least some degree. The differences lie in how practical these alternatives are in terms of investment requirements, expected benefits, and performance standards. Process controls that minimize gross dust generation rates and alkali levels are commonly used throughout the industry. Significant reductions in current CKD generation probably cannot be achieved through these means without compromising product quality. Although process differences can influence the amount of CKD recycled (e.g., fuel type, process type, feed inputs, etc.), the incremental benefit of initially removing less CKD from the kiln system is unlikely to induce significant and potentially costly process changes.

CKD treatment and return systems show the greatest promise for increasing the amount of CKD returned to the kiln system. These treatment systems minimize net CKD generation by removing alkalies and other contaminants and returning treated dust to the system without compromising product quality. The promising technologies in this area include recovery scrubbing, alkali leaching, and fluid bed dust recovery. Water-based alkali leaching shows the greatest promise for effective CKD treatment with minimal technological requirements. Recovery scrubbing and fluid bed dust recovery, in contrast, continue to undergo development, and require significant expertise for design, installation, and optimization.

Beneficial uses of CKD are at a further stage of development than recycling technologies. In contrast to CKD treatment and recycling technologies, all of the beneficial utilization technologies appear to be readily feasible technically (at least at the pilot scale), and may involve activities as simple as blending CKD with other materials. Nonetheless, research is required to more fully commercialize such uses, since even blending requires knowledge of appropriate mixing ratios. Incorporation of fly ash with cement reportedly reduces the negative influence of alkalies on concrete strength. Additional research should be conducted to determine whether blending fly ash with cement might allow greater alkalies in clinker, and therefore greater CKD recycling rates in the kiln system. Aside from blending, the more technically challenging beneficial uses include glass making and coagulation in water treatment.

Although many viable beneficial uses of CKD have been identified, the inherent variability of CKD, as established in Chapter 3, poses a significant limitation on its widespread use. Cement kiln operations are designed to optimize the chemical and engineering characteristics of clinker, while CKD is a byproduct for which specifications cannot be developed. Hence, depending upon its ultimate use, the dust may require testing and possibly further processing. This situation may limit the option of using CKD as a material in scenarios such as when a project planner knows little or nothing about the available CKD nearest to the project location and may be willing to use a more expensive, but more standardized material.

Strictly managed land disposal practices are technically feasible, as has been demonstrated with landfills containing many other materials. Numerous engineering firms have the capability to design all necessary environmental protection features, including leachate collection and treatment systems, liners, ground-water monitoring systems, and run-on and run-off controls. These operations tend to be extremely costly, however, a reality that may provide an incentive toward developing other management alternatives.

8.4.2 Human Health/Environmental Considerations

Direct recycling or treatment and recycling practices provide an inherent environmental benefit by minimizing the amount of net CKD that will be disposed of. These practices conserve energy and resources originally used to prepare and heat the raw feed that would otherwise become wasted CKD. Furthermore, total CKD return to the kiln system eliminates the environmental liabilities associated with land disposal.

In addition to influencing CKD generation rates, the impact of alternative practices on other process waste streams should be considered. For example, some alternatives, like recovery scrubbing, can improve kiln emissions quality. This technology also reportedly generates only distilled water and potash. In contrast, any wastewater generated from alkali leaching may warrant some concern. Water containing alkalies may be released to surface or ground waters if this material is handled improperly. Based on EPA's information, however, this system can be and has been installed in a way that is environmentally protective. Further investigation of alkali leaching wastewater disposal may be warranted before the impacts of this technology can be fully assessed.

The environmental implications for beneficially using CKD are uncertain. The nature of most alternatives for beneficial utilization of CKD is to disperse it in some manner into the environment. CKD managed in this manner will generally be exposed to climatic influences such as precipitation and wind. Some alternatives, however, occur in controlled conditions, such as those in which CKD is blended with sewage sludge and used as a municipal landfill daily cover. Alternatives that involve contact with human food chain products, such as fertilizer production and livestock feed, may require more careful consideration. When appropriate, however, the use of CKD may reduce the demand for traditional materials (e.g., limestone) that would have to be mined at some environmental cost. This holds true for uses such as road base construction, soil stabilization, and waste stabilization.

CKD management in land disposal units represents wasted quantities of mined and milled raw materials. As documented in Chapter 6, CKD disposal in quarries may not adequately protect human health and the environment. One option is disposal in strictly managed landfills, which would significantly reduce threats to human health and the environment.

8.4.3 Economic Feasibility

Although the start-up costs of many of the CKD recycling technologies discussed in this chapter are low to moderate, inducing significant changes in the CKD management practices at cement facilities may require time and successful demonstration projects. The least capital-intensive CKD treatment technology appears to be water-based alkali leaching. Leaching systems can be installed with minor start-up and maintenance costs, especially as applied to wet process kilns. This technology may also generate marketable by-product(s). Recovery scrubbing and fluid bed dust recovery also show market potential. In particular, recovery scrubbing appears to show the greatest potential for adaptability and effectiveness. Notwithstanding the high start-up costs associated with these technologies, net benefits can be realized within a few years. Each of these technologies provides the economic incentives of increased product yield, and reduced resource losses to disposed CKD.

The economic incentives to sell CKD for beneficial utilization appear to be moderate but growing. In particular, uses such as stabilization of municipal sewage treatment sludge could

prove to be in high demand. Municipalities will reportedly pay over $11 per metric ton ($10 per ton) for CKD as a new treatment alternative or as an alternative to lime. Not only does selling CKD for beneficial use allow operators to use the material rather than simply disposing of it, but kiln operators can realize significant revenues from such activities. For example, one facility (Ash Grove Cement) reportedly sells its dust at $11 to $22 per metric ton, a figure that may be considered full profit since the material would otherwise be disposed. Cement product, in contrast, is typically sold with a profit of about $5.50 per metric ton.[239] Regardless of the price at which CKD might be sold for such uses, the fact that operators can receive income makes it highly feasible economically. Additionally, CKD is significantly less expensive to users than most or all alternative materials. However, this savings can be lost in transport costs if the distance between the user and the cement plant is too great.

The increased costs of more strict land disposal practices would represent a significant liability to all plants disposing CKD. Implementation of Subtitle C requirements would result in costs that might make a number of CKD treatment technologies economically viable. Even eventual Subtitle D requirements, though less onerous than Subtitle C requirements, could impose a significant economic burden on operations that currently dispose their CKD.

8.4.4 Current Extent of Use and Trends

Currently, CKD management incentives appear to be diverging in two directions, with both recycling and beneficial use offering attractive prospects. On one hand, operators want to minimize CKD removal from the kiln to conserve resources and energy lost to a waste material, and to minimize operating costs for CKD waste management units. Considering the necessary investments in capital and labor, however, the prospect of avoided costs associated with most of the technologies to minimize CKD removal from the kiln appears to hold little appeal at present.

In contrast, the beneficial use of CKD as a marketable product appears to be growing, such that an operator might find positive incentives to remove CKD from the kiln system and sell it, thereby avoiding a costly recycling system. If EPA finds that CKD does not warrant hazardous waste regulation, many tentative markets for beneficial utilization of CKD may develop more fully to create a significant increased demand for and price of CKD. Nonetheless, several factors could increase incentives to minimize removal of CKD from the kiln. These include stricter CKD management regulations, increased fuel and feed costs, and the development of more economical recycling technologies. To minimize resource losses through disposal, and to minimize the use of CKD in beneficial areas of unknown environmental impact, EPA believes that the first CKD management objective should be to economically recycle as much CKD to the kiln as possible without compromising the quality of the clinker product.

In general, some of the most promising technologies for minimization of CKD removal from the kiln system appear to be recovery scrubbing, alkali leaching, and fluidized bed recovery. These technologies utilize all or nearly all of the CKD generated, may produce one or more marketable products, and provide a return on the invested capital.

Among the beneficial uses, stabilization of municipal sewage sludge appears to have a great deal of potential as a means of beneficially utilizing CKD, particularly as a daily municipal landfill cover, where the location of CKD use and final disposition is carefully controlled. EPA does not believe that widespread agricultural use of CKD for producing crops that are consumed

---

[239] Personal communication with Hans Steuch, Ash Grove West, December 9, 1992.

by humans should be practiced without full characterization of the CKD from each source. Caution should also be exercised in using CKD as a livestock feed supplement. Other potentially useful applications of CKD include waste stabilization, soil stabilization, soil amendment (liming agent), road base construction, and blending with portland cement to make miscellaneous cement-based construction products.

If EPA determines that Subtitle C regulation of CKD is warranted, the significant potential cost of complying with Subtitle C land disposal requirements may increase the marketability of many recycling technologies. Subtitle D requirements, if implemented and enforced at the state level, could also increase the economic viability of CKD recycling technologies, which would result in less land disposal of CKD and less wastage of raw material. Requirements under these regulatory alternatives are described in detail in Chapter 9 of this report.

CHAPTER EIGHT

ALTERNATIVE CKD MANAGEMENT PRACTICES AND POTENTIAL UTILIZATION

8.0 OVERVIEW 1

8.1 MINIMIZATION OF CKD REMOVAL FROM THE KILN SYSTEM 2

8.1.1 Control of CKD Generation Rates 2

8.1.2 Direct Return of CKD to the Kiln 3

Return to Flame End 5

Return with Raw Feed 5

8.1.3 Treatment and Return of CKD to the Kiln 6

Pelletizing 6

Leaching with Water 6

Leaching with a Potassium Chloride Solution 8

Alkali Volatilization 8

Recovery Scrubbing 9

Fluid Bed Dust Recovery 13

8.2 BENEFICIAL USE OF REMOVED CKD 16

8.2.1 Stabilization of Sludges, Wastes, and Contaminated Soils 17

Sewage Sludge 17

Oil Sludge 21

Acid Waste 22

Miscellaneous Wastes and Contaminated Soils 23

8.2.2 Soil Stabilization 24

8.2.3 Land Reclamation 24

8.2.4 Agricultural Applications 25

Fertilizer 25

Liming Agent 28

8.2.5 Livestock Feed Ingredient 28

8.2.6 Lime-Alum Coagulation in Water Treatment 31

8.2.7 Construction Applications 31

Blending with Portland Cement 32

CKD as the Only Blending Agent 32

CKD as a Co-Blending Agent 33

Use as a Road Base Material 34

8.2.8 Sanitary Landfill Daily Cover 35

8.2.9 Mineral Filler 36

8.2.10 Lightweight Aggregate 36

8.2.11 Glass Making 36

8.3 ON-SITE LAND DISPOSAL 36

8.4 SUMMARY AND FINDINGS 38

8.4.1 Technical Feasibility 43

8.4.2 Human Health/Environmental Considerations 44

8.4.3 Economic Feasibility 44

8.4.4 Current Extent of Use and Trends 45

LIST OF EXHIBITS

Exhibit 8-1 **Flow Chart of Gross CKD Management Pathways** 1

Exhibit 8-2 **Process Flow Diagram of Recovery Scrubber** 10

Exhibit 8-3 **Process Flow Diagram of Fluid Bed Dust Recovery Process** 15

Exhibit 8-4 **Summary of Alternatives for Minimization of CKD Removal from the Kiln System** 39

Exhibit 8-5 **Summary of Alternatives for Beneficial Utilization of CKD Removed from the Kiln System** 41

CHAPTER NINE

COST AND ECONOMIC IMPACTS OF ALTERNATIVES TO CURRENT CKD DISPOSAL PRACTICES

9.0 INTRODUCTION

Section 8002(o)(5) of RCRA requires EPA to analyze "alternatives to current disposal methods" for cement kiln dust (CKD) waste, while Section 8002(o)(6) requires the Agency to analyze "the costs of such alternatives" and Section 8002(o)(7) directs EPA to address "the impact of those alternatives on the use of natural resources." This chapter presents EPA's analysis of the cost and potential economic impacts of adopting a wide variety of alternative practices for managing CKD, including the use of emerging technologies. This analysis draws on the information presented in preceding chapters addressing current management practices (Chapter 4) and potential management alternatives (Chapter 8). The results of this analysis contributed to the formulation of a range of regulatory status options, which are presented for public review and comment in Chapter 10.

This chapter consists of three sections. The first describes the approach and methods used to develop the cost and impact estimates. The second presents and discusses the costs of managing CKD under a variety of different management practices. The final section explores potential impacts on the cement industry and its markets and relates these impacts to a general discussion of regulatory management options.

9.1 APPROACH AND METHODS

This section describes how EPA conducted its cost analysis. A short section on the conceptual framework used for the analysis is followed by a description of the methodology used to estimate facility costs and a discussion of data sources and limitations. Details on the Agency's approach, methods, and results are provided in a Cost Background Document[1] prepared in support of this report, which may be found in the RCRA docket (No. F-93-RCKA-FFFFF).

RCRA requires EPA to analyze alternatives to current CKD disposal methods and their costs. "Alternatives" can be thought of in two distinct ways: alternative regulatory frameworks that EPA might select, and alternative management practices that individual cement kiln operators might adopt *in response to* regulatory changes. To avoid confusing these two ideas, this report will refer to the choices to be made by EPA as regulatory <u>scenarios</u>, and the choices made by cement kiln operators in response to changing regulations as CKD management <u>alternatives</u> or <u>responses</u>. This report first provides estimates of the costs of CKD management alternatives for the case study plants, and then uses these cost estimates to address the broader question of the potential industry-wide costs and impacts associated with these practices, as described in Section 9.3.

---

[1] ICF Incorporated, 1993. *Technical Background Document: Cost and Economic Impacts of Alternatives to Current CKD Disposal Practices.*

In EPA's basic analytical framework, the costs imposed by an alternative management practice are measured as the difference in cost between the current management practice (referred to hereafter as the "baseline") and the (generally different) alternative practice.

9.1.1 Data Sources

Detailed site-specific data on cement plant operation and CKD generation and waste management practices form the basis for the analyses presented in this chapter. The more important data were drawn primarily from the 1991 Portland Cement Association (PCA) Survey responses, supplemented by EPA observations made during the 1992 field sampling visits to the 10 cement plants addressed in this analysis and referenced in earlier chapters. Data on emerging CKD management technologies were obtained from both published and primary sources, including detailed discussion and correspondence with the developers of these technologies. Most of the industry and market data upon which EPA has based its assessment of the economic conditions facing the cement industry were obtained from documents published by PCA and the U.S. Bureau of Mines (BOM). PCA's U.S. and Canadian Portland Cement Industry, Plant Information Summary, December 31, 1991, and BOM's Cement (1990) were particularly useful, as were documents published by the U.S. International Trade Administration, International Trade Commission, and Bureau of the Census.

9.1.2 Approach to Estimating Costs and Impacts of CKD Management Alternatives

EPA's basic approach to analyzing the costs of CKD management alternatives in this report is to estimate the financial costs of each alternative as they would be experienced by a sample of 10 selected cement manufacturing plants. These estimates were made by applying cost-estimating functions to the specific conditions found at the facilities in the sample. This approach may be contrasted with an exhaustive analysis of the costs at every facility in the country, for which sufficient data were unavailable, and a model facility approach, which may have lacked realism for specific facilities. A disadvantage of this approach is that in order to extrapolate the results of the cost analysis at specific facilities to estimates of nationwide costs, one must assume that the sample is representative of the industry as a whole. To address this issue, EPA has taken care to select plants that encompass much of the range of conditions found across the industry.

Case Study Plants

EPA selected a sample of 10 plants for detailed analysis and discussion. The 10 plants examined were drawn from 15 plants at which EPA conducted CKD sampling during February and March, 1992. Of these 15 facilities, the 10 selected as the sample for the costing analysis are those plants for which EPA's knowledge of existing operational and waste management practices is most complete. These 10 plants are identified in Exhibit 9-1, which also presents some of the key data on plant operations, CKD generation, and CKD management that are used in the analyses. As discussed in Chapter 1, the Agency has assembled this sample so as to reflect, to the extent possible, the full range of cement kiln technology types, geographic regions of the U.S., and types of fuel used. Accordingly, EPA believes that the 10 facilities examined in this chapter are adequately representative of the population of active CKD-generating plants in the U.S. to support general conclusions regarding the cost and economic impacts of adopting alternative CKD management practices.

To verify that the sample is representative of the population, EPA conducted t-test comparisons of the average gross and net CKD generation rates of the sample of 10 and the remaining 69 cement plants for which data are available. These variables were selected because they have a strong bearing on the costs of adopting various CKD management methods. The mean gross and net CKD generation rates of these two groups cannot be distinguished at a 95 percent confidence level, suggesting that they are drawn from the same overall population and

Exhibit 9-1

Facilities Included in the Cost Analysis

Company	Location	Kiln Type	Hazardous Waste Burner (Yes/No)	Gross CKD Generation Rate (Metric Tons/Yr.)	Net CKD Generation Rate (Metric Tons/Yr.)	CKD Disposed (Metric Tons/Yr.)	CKD Sold (Metric Tons/Yr.)
Ash Grove Cement	Chanute, Kansas	Wet	Yes	80,244	77,372	59,963	17,409
Dixie (Southdown)	Knoxville, Tennessee	Dry Ph/Pc	Yes	27,431	16,506	4,386	12,120
Essroc Materials	Speed, Indiana	Dry Ph/Pc	No	172,249	28,274	25,008	3,266
Holnam	Clarksville, Missouri	Wet	Yes	344,700	227,000	214,753	12,247
Holnam	Tijeras, New Mexico	Dry Ph/Pc	No	58,659	25,755	25,755	0
Independent Cement	Catskill, New York	Wet	No	57,299	57,293	36,025	21,268
Kaiser Cement	Cupertino, California	Dry Ph/Pc	No	162,388	545[a]	454	91
LaFarge	Fredonia, Kansas	Wet	Yes	71,372	67,446	67,446	0
Rinker Portland Cement	Miami, Florida	Wet	No	95,246	900	900	0
River Cement	Festus, Missouri	Dry Long	Yes	69,054	53,784	53,784	0

Source: Responses to 1991 Portland Cement Association (PCA) Survey.

[a] Although the operator of this plant reported a net CKD generation rate of 545 metric tons/yr. for 1990, EPA determined during its 1992 site sampling visit that the plant currently recycles 100 percent of the gross CKD generated. Accordingly, in the remainder of this chapter, EPA assumes that net CKD generation by this plant is zero.

therefore, that the sample adequately represents the larger group of cement plants for which EPA has data, and by inference, the industry as a whole.

Methods for Estimating Facility Costs

To calculate the costs of managing CKD in various ways for the 10 plants, EPA developed and applied cost-estimating functions, based on an engineering analysis of each alternative and its component operations and activities. These functions were developed to

express CKD management costs as a function of waste generation rate and other plant-specific operating variables.

In EPA's cost estimating analysis, the first step was to estimate the costs and benefits[2] of waste management activities and their distribution over time. The second step was to discount all future costs to the present and then calculate the equivalent annualized compliance cost or benefit. The annualized compliance cost or benefit is the average annual cost or benefit (i.e., annuity), over the assumed operating life of the facility, that has the same total present value as the sum of the actual expenses incurred and revenues received at their actual times. This method offers the distinct advantage of allowing comparisons among alternative technologies whose costs and benefits may be incurred at different times.

Cost estimating functions were developed from an engineering analysis of each technology, and were generally based on empirical data regarding each cost element for a given technology. The sum of the costs of these elements equals the total facility cost for a particular CKD management strategy. Similarly, the benefits accruing to the facility operator of adopting a particular CKD management alternative are expressed on an annualized basis; these benefits are in the form of operating savings and additional revenues. In all cases, EPA's cost estimating procedures consider both initial capital investment costs, and annual operating and maintenance (O&M) costs (e.g., materials, labor, and utilities). Results are expressed as annualized total costs, total and annualized capital costs, and unit costs (e.g., cost per unit of waste or product).

For certain CKD management alternatives, e.g., disposal of CKD in a secured landfill under RCRA Subtitle C, two additional categories of costs may be incurred. In one category are the capital costs for disposal facility closure and annual costs of post-closure care and maintenance, which are simply capital and O&M costs that are incurred beginning at facility closure. In the other category are the costs associated with potential corrective actions for solid waste management units that release hazardous constituents to the environment; these costs would apply only to cement plants that are newly regulated under RCRA Subtitle C. EPA has not explicitly included the costs of corrective action in the final impact analysis due to the wide range of uncertainty associated with these cost estimates. Nonetheless, some estimates of possible plant-level corrective action costs for typical facilities are presented in Section 9.2 for illustrative purposes.

Methods for Extrapolating from the Case Study Sample to the Industry

Having estimated the costs of various CKD management methods for a representative sample of plants in the cement industry, the Agency performed an analysis of the economic impacts of regulatory scenarios. This analysis is presented in Section 9.3.

As part of this exercise, EPA extrapolated the estimates obtained for the sample of 10 plants to the industry as a whole, to gauge the potential nationwide impacts of the scenarios considered. EPA estimated nationwide impacts of general regulatory management options in two steps.

---

[2] In this analysis, EPA has considered both the operating savings and the income generated through the sale of new byproducts and services associated with certain CKD management methods. These savings and income streams are referred to throughout this chapter as "benefits."

Cost impacts were first scaled up from the 10 case study plants to the larger 79 facility sample for which the Agency has CKD generation rate data from the PCA Survey. Next, cost impacts were scaled up from these 79 plants to all plants in the domestic industry. To scale the cost from the 10 sample plants to the 79 plants, EPA multiplied total costs estimated for the 10 plants by the ratio of (1) total net CKD for the 79 plants to (2) total net CKD for the 10 plants. To estimate total costs for the additional 36 plants (for which CKD generation data were not available), the Agency extrapolated costs from the 79 survey plants based on relative cement production rather than CKD. To estimate nationwide costs, EPA thus scaled up the total cost for the 79 survey respondents by the ratio of (1) total U.S. cement production capacity to (2) estimated cement production capacity of the 79 plants.

For waste management alternatives that might affect only the 35 plants currently burning or projected to burn hazardous waste, the analysis was conducted in the same manner except that costs for the five hazardous waste burning plants in the sample were first scaled up to the 17 hazardous waste burning plants represented among the 79, and then to the 35 hazardous waste burning plants nationwide.

9.1.3 Cost Accounting Assumptions

Costs of regulations can be viewed in two contexts, economic and financial. The two perspectives consider regulatory costs in two very different ways for different purposes. The economic context considers impacts on resource allocation for the economy as a whole, while the financial context evaluates private sector effects on facilities, firms, and other discrete entities. For this report, EPA has focused on the financial context (i.e., impacts on facilities and the industry), in keeping with the statutory directives articulated at RCRA §8002(o), by evaluating the costs of alternative management practices and their effects on the industry.

Consequently, in conducting this analysis, EPA has employed data and cost accounting assumptions that reflect the viewpoint of cement producers. For example, the Agency has employed a discount rate (9.49 percent) that approximates the likely cost of obtaining financing for regulatory compliance-related expenditures, rather than a "social" discount rate, or cost to society. This discount rate is based on an estimate of the weighted average cost of capital to U.S. industrial firms.[3] Similarly, costs and benefits have been calculated on an after-tax basis, to better reflect the actual financial impacts of prospective regulatory requirements.

In estimating the costs of applying specific waste management technologies, the Agency made a number of additional assumptions, as described in the Cost Background Document.

9.1.4 Limitations of the Analysis

The analytical results presented below are based upon the application of simple cost engineering models to a sample of 10 cement plants that EPA has assumed are representative of the industry as a whole. To the extent that this assumption is not valid (i.e., there are important operational practices or technologies being used to generate and manage CKD that are not known to the Agency), the results of this analysis may yield biased conclusions. Given, however, the scope and depth of EPA's information collection process (e.g., site visits to nearly 20 percent

---

[3] ICF Incorporated, 1990. *Regulatory Impact Analysis for the Proposed Rulemaking on Corrective Action for Solid Waste Management Units (Draft)*. Prepared for Economic Analysis Staff, Office of Solid Waste, U.S. EPA. June 25, 1990.

and detailed survey results from nearly 70 percent of the plants in the industry), the Agency believes it unlikely that any important CKD management technologies or site-specific CKD management practices have been overlooked.

There are important limitations in EPA's understanding of the technical aspects and costs of direct CKD recycling. While virtually all cement plants directly recycle some portion of the CKD collected, the Agency has only a limited understanding of the extent to which facility operators currently attempt to maximize the quantity recycled (or control the trace metal or dioxin concentrations), the engineering and operational constraints on this practice, and the economic trade-offs between the incremental costs of increasing recycling rates and the benefits of recovering the resource value contained in the CKD. Because increasing direct CKD recycling is perhaps the simplest and most effective means of eliminating CKD disposal and its associated impacts, the Agency views this as a key information gap.

Finally, EPA's knowledge and understanding of certain market and technical issues limits the Agency's ability to offer definitive conclusions regarding the feasibility of certain CKD management options. For example, while it is clear that alkali content of the cement product can be a controlling factor in the extent of CKD recycling in some parts of the country, EPA does not have sufficient information on the regional variability in cement product markets (which are often driven by state transportation department specifications) and raw material composition to determine which plants are or may be constrained by the 0.6 percent alkali limit established by ASTM and which are not.[4] Similarly, the feasibility of raw material substitution as a means of increasing CKD recycling rates broadly across the industry cannot be determined based upon current information. The Agency does, however, view this option as a promising, low-cost alternative to land disposal of CKD, at least for some plants.

9.2 DESCRIPTIONS AND COSTS OF BASELINE AND ALTERNATIVE CKD MANAGEMENT METHODS

The waste management practices discussed in this report reflect the range of practices that are currently employed to manage CKD, as well as alternative management techniques that the Agency believes could be employed by facility operators in response to new regulatory requirements. These practices fall into four basic categories: (1) current practices; (2) alternative land disposal practices; (3) alternative recycling and recovery; and (4) other operating practices.

At present, at least some operators of U.S. cement kilns are using most of these practices, and many use combinations of several. As shown in Chapter 3 of this report and in Exhibit 9-1, cement plant operators most often directly recycle some fraction of their gross CKD, many sell some portion of their net CKD for off-site use, and most dispose the remainder in on-site waste management units. In only a few cases is CKD treatment and recovery practiced, and in no instance, to EPA's knowledge, is CKD currently managed as a RCRA Subtitle C hazardous waste.

As discussed in Chapters 4 and 8, based upon extensive research and evaluation, EPA believes that certain trends in CKD management are apparent, and that at least some of these trends may continue regardless of the Agency's ultimate decision concerning the regulatory status of CKD. The most important trend observed is the move away from disposal and toward waste

[4] The reader is referred to Section 8.1.2 of this report for background information on this topic.

reduction, recovery, or productive use. For example, some operators have been successful in increasing direct CKD recycling, either by reconfiguring dust handling systems or modifying their raw material mix; in at least a few cases, net CKD generation rates have been cut to zero in the process. At the same time, sales of CKD for off-site use have been increasing,[5] as cement companies have more aggressively promoted the sale and use of this material for stabilizing wastes, amending agricultural soils, and other applications. Finally, the historical interest in recovering and reusing CKD to produce cement clinker (described in Chapter 8) is resulting in the limited application of several CKD recycling technologies. Based upon a preliminary evaluation (described more fully below), EPA believes that several of these technologies may find more widespread application in the cement industry during the next few years. The level of interest in this type of CKD management approach is evidenced by the large number of additional site-specific engineering evaluations that have been requested of and conducted by the developers of these technologies.[6]

As described in Section 9.1, EPA has developed cost estimating equations to calculate baseline costs reflecting the current waste management practices employed by nine of the 10 facilities in the sample (the tenth generates no net waste), as well as the costs under various alternative management practices. EPA's current and alternative land disposal cost estimates reflect the assumption that disposal costs are a function of several variables:

- Quantities of CKD generated, recycled, and disposed;
- Physical and chemical characteristics of CKD;
- Depth to ground water;
- Current ground-water and surface water monitoring practices;
- Location characteristics of the facility;
- Characteristics of CKD waste management units; and
- Remaining useful life of existing CKD waste management units.

Differences in these variables across facilities explain, in large part, differences in results among facilities that may have comparable CKD generation rates. Similarly, the Agency's costing functions for CKD treatment and recovery technologies are based upon waste generation rates, the chemical composition of the CKD entering the recovery process, and in some cases, cement kiln technology type and local climatic conditions.

9.2.1 Current Practices

The major current practices that are applied to CKD fall into three basic categories, which are discussed below: 1) direct recycling; 2) off-site beneficial use; and 3) on-site land disposal. Each of these three approaches to dust management confers economic benefit to or imposes costs on the facility operators that employ it. EPA's evaluation of alternative CKD management methods and their costs builds upon an understanding of the current, or baseline, practices for CKD management that are described in this section.

---

[5] Recent information suggests, however, that the operators of a number of hazardous waste-burning cement plants have suspended sales of CKD, pending the outcome of EPA's decision-making process regarding the RCRA status of this material.

[6] For example, a principal of Passamaquoddy Technology has reported conducting 35 such evaluations for his technology. Personal communication with Garrett Morrison, Passamaquoddy Technology, Inc., July 2, 1993.

Direct Recycling of Collected Dust

Direct recycling, as described in Chapters 3 and 8, is practiced at a majority of the operating cement plants in the U.S., at least to some degree. In brief, direct recycling involves returning CKD to the cement kiln (or raw material storage) directly as an input, without any treatment or reclamation. Approximately 18 percent of cement plants, or 20 plants nationwide, recycle all of their CKD.[7]

As a general matter, as stated in Chapter 8, it is in the facility operator's interest to remove as little CKD from the kiln system as possible. Nonetheless, there are wide disparities across the industry in both the quantities and the percentages of gross CKD generated that are directly returned to the kiln (or raw feed) system. In general, operators of dry kilns tend to recycle a greater percentage of their gross CKD than operators of wet process systems, and operators of hazardous waste-burning kilns recycle a lower percentage of their CKD than operators of kilns not burning hazardous wastes. CKD that is recycled is typically pneumatically conveyed, or "insufflated" to the flame end of the kiln, where it is reintroduced through or adjacent to the burner pipe. Alternatively, the collected CKD may be conveyed to raw material storage (silos or tanks, for dry and wet process kilns, respectively).

One approach to decreasing the amount of CKD removed from the system (and therefore, destined for disposal) is to reduce the total amount of dust leaving the kiln (i.e., decrease the gross CKD generation rate). As discussed in Chapter 8, however, facility operators are already motivated by process efficiency and cost considerations to limit the quantities of dust that exit the kiln; most kilns are equipped with chain sections and most operators limit air flow velocities to reduce turbulence, in order to control excessive dust production. Accordingly, opportunities for reductions in gross CKD, or total collected dust, in cement kiln systems appear to be quite limited.

Options for returning the material collected, however, are more numerous. CKD has significant value as a raw material in cement making, particularly because it has already been quarried, crushed, ground, blended, and partially calcined. One industry source has indicated that this material (net CKD) has a value to the cement producer of $4-12 per short ton;[8] this range is consistent with estimates obtained from other industry sources.

In performing this analysis of the impacts of CKD management alternatives, EPA has not explicitly calculated the baseline cost savings at plants that already recycle their CKD or the industry-wide benefits of increasing recycling rates, because of data limitations. As stated above, however, the Agency believes that the average reductions in variable operating costs of increased recycling are on the order of $9 per metric ton (range of about $4.50 to $13.50 per metric ton) of CKD recycled, less handling costs. These estimates do not consider the capital and operating costs associated with installing direct CKD recycling equipment (e.g., for insufflation), nor do they reflect any off-setting credits associated with the avoided costs of CKD disposal.

---

[7] Based on 18 percent of the sample of 79 plants in the Portland Cement Association survey and 115 plants total in the U.S.

[8] Morrison, G.L., 1993. *Passamaquoddy Technology Recovery Scrubber Operations Update and Forecast.* July. pg. 7.

Off-Site Beneficial Use

As discussed above in Chapters 4 and 8, CKD may be used for a number of off-site beneficial purposes, including stabilizing wastes, fertilizing farmland, and neutralizing waste acids. In 1990, off-site utilization accounted for approximately 943,000 metric tons of CKD, which was about 6 percent of the gross CKD and 20 percent of the net (non-recycled) CKD generated in the U.S., according to PCA Survey data. Approximately 70 percent of the total quantity of CKD going to off-site beneficial use was used for waste stabilization, including dewatering and stabilizing municipal sewage sludge and oil sludge. Twelve percent of the CKD used off site was applied as a combination fertilizer and agricultural liming agent, due to its potassium content and its alkalinity (which is beneficial where acidic soils are prominent).

EPA has extremely limited data on the prices obtained for CKD destined for off-site use.[9] Only one actual price quote is currently available: Keystone Cement in Bath, Pennsylvania reportedly sells its CKD for about $10.00 per metric ton plus transportation costs.[10] Based upon observations made during field visits, EPA believes that the operators of other cement plants sell CKD for a few dollars per metric ton, or give it away. In this chapter and supporting analyses, the Agency has assumed that cement plants receive a nominal price for their CKD ($5 per metric ton), because of the availability of low-cost competing materials in many areas. The net revenues received from CKD sales are assumed to be equal to the sale price (f.o.b.) because of the minimal handling or processing required for typical off-site uses.

Current Land Disposal Practices

Most CKD that is removed from the kiln system (i.e., is not directly recycled to the kiln) and is not used off site in a beneficial application is disposed of on land. EPA believes that, in the absence of new regulatory controls, this would continue to be an important waste management practice across the industry. Of the 81 facilities responding to the 1991 PCA survey, 77 percent dispose of some CKD on site. The remaining 23 percent recycle all of their CKD, or sell all of their non-recycled, or net, CKD. No off-site disposal of CKD has been reported. Extrapolating from data provided by the PCA Survey respondents to the entire industry, an estimated 3.8 million metric tons of CKD were land-disposed nationwide in 1990. A full description of current land disposal practices is provided above in Chapter 4.

Facilities relying on on-site disposal typically dump CKD into an unlined, retired portion of the limestone quarry associated with the cement plant. Alternatively, they may dump CKD in large unlined piles at other on-site locations. Only one respondent to the PCA Survey reported use of a pond, in which the CKD disposal area collects and retains water that covers the CKD. About one-fourth of the plants reportedly co-dispose CKD with other waste materials, such as furnace brick, concrete debris, and tires; typically, the co-disposed wastes amount to less than one percent of the quantity of CKD disposed. In addition, quarry overburden (the earth and rock removed to reach unmined deposits of limestone and other raw materials) is co-disposed with CKD at some plants. Across all plants represented in the PCA Survey data, total quantities of overburden co-disposed with CKD nearly equalled the amount of CKD disposed in 1990.

---

[9] Although EPA has received information on off-site use in response to its 1992 RCRA §3007 request indicating that the operators of at least 35 plants sold CKD in 1990, and that an additional 31 plant operators either sold or gave away CKD during that year, none of these responses provided CKD pricing data.

[10] Personal communication with Doug Glasford, Keystone Cement, November 24, 1992.

Increasingly, on-site CKD management practices are being affected by non-RCRA federal environmental control regulations and standards developed and applied at the state level. As discussed in Chapter 7, national controls on stormwater run-off have been developed under the Clean Water Act, and plants in many states are subject to limitations on fugitive dust emissions from operating and waste management units, including CKD piles. In some instances, state government agencies have required special controls on CKD management units, to limit contaminant releases to the environment.

EPA's cost estimates for current baseline CKD land disposal practices for the case study plants include costs for land, land clearing, heavy equipment, operator labor, utilities, and, as appropriate, environmental control measures such as dust suppression and run-on/run-off controls. The bulk of these costs are associated with equipment to convey CKD from the cement plant to the disposal site and place it in the desired location. For consistency, the Agency has assumed throughout that CKD disposal would be performed with dedicated equipment, and that certain more or less fixed costs would be incurred by the operator, irrespective of the CKD quantity disposed.

Of the nine facilities in the sample used in EPA's cost analysis that rely on on-site CKD disposal, estimated costs for land disposal ranged from about $83,000 to just under $400,000 per year; the median cost is about $3.50 per metric ton of CKD. In part because of EPA's simplifying assumptions, facilities disposing the least CKD have the highest estimated unit disposal costs.

9.2.2 Alternative Land Disposal Practices

In the event of a change in the RCRA regulatory status of CKD, it is likely that changes in existing management practices would be required at most plants for regulatory compliance. These modifications would likely be driven by specific regulatory requirements, which cannot be precisely defined at this time. EPA has prepared an analysis of the costs of several different approaches to more stringent regulation of the land disposal of CKD, which are described in this section. The regulatory framework for these approaches is Subtitle C of RCRA, which provides for a comprehensive system for the management of hazardous wastes. This section presents descriptions of and costs associated with three different approaches to land disposal of CKD within the context of Subtitle C: (1) a conventional Subtitle C scenario in which all existing program elements are applied; (2) a modified Subtitle C scenario that incorporates the flexibility in establishing site-specific requirements provided by §3004(x) of RCRA; and (3) a much more limited approach that might be implemented to control CKD contaminant releases to environmental media.

Conventional Subtitle C Technology and Administrative Standards

EPA regulations promulgated pursuant to RCRA Subtitle C define stringent "cradle to grave" management practices that must be applied to hazardous wastes generated and managed in the United States. Under these regulations, only carefully defined approaches to hazardous waste management are permissible, and all of these approaches are adapted to the conditions found at individual hazardous waste management sites through permits. As an inorganic solid material, only a very few options are available for the permanent disposal of CKD as a hazardous waste. CKD could be managed for short periods of time in a waste pile, but long term disposal would require the use of a landfill meeting EPA-specified minimum technology standards. Accordingly, EPA has identified and categorized all requirements under Subtitle C that might

have cost implications for the management of CKD in a hazardous waste landfill, including requirements related to notification, permitting, technical standards for land disposal, monitoring, closure, post-closure care, financial responsibility, and corrective action for continuing releases due to past practices; possible Land Disposal Restrictions program requirements have not been included, due to uncertainties regarding appropriate pre-disposal treatment for this material. More detailed requirements are described in the Background Document.

Subtitle C Costs (Exclusive of Corrective Action Costs)

Assuming Subtitle C landfill disposal, annualized costs for eight of the nine facilities with non-zero net CKD generation range from about $2.4 million to more than $14 million over and above baseline waste management costs, and average about $6.3 million per facility. The ninth plant, facility G, generates a relatively small amount of net CKD; its annualized incremental costs are much lower -- about $140,000 per year. For the eight facilities with significant net waste generation rates, capital costs comprise 50 to 77 percent of the annualized costs. Total capital costs for each facility range from about $7.8 million to $74 million, except for facility G, which has an estimated capital cost of only $20,000 because its operator is assumed to send the CKD off site for disposal, and requires only a temporary storage area. Overall, average capital costs are $25.8 million for the case study plants. The relative importance of capital costs is a reflection of the major capital expenditures that would be required to construct on-site Subtitle C secured landfills for managing CKD.[11] Estimated Subtitle C disposal costs for each facility are shown in Exhibit 9-2.

The highest cost per metric ton of net CKD for Subtitle C disposal is more than $153 per metric ton for Facility G, which is assumed to send its waste off site because that would be less costly than constructing an on-site unit, given this plant's low net waste generation rate and scale economies. Most of the remaining facilities also have costs of more than $100 per metric ton of CKD. Even at these relatively high unit costs, however, construction of on-site disposal units is the most cost-effective response for most of the operators of the plants in the sample, because of scale economies.

Potential Subtitle C Corrective Action Costs

One potentially important and very costly component of regulating CKD under RCRA Subtitle C is corrective action requirements. Section 3004(u) of the Hazardous and Solid Waste Amendments of 1984 (HSWA) to RCRA requires permitted Subtitle C facilities to undertake corrective action for toxic releases to all media, from all solid waste management units (SWMUs) located on their premises. These requirements would affect all newly-permitted cement plants under the Subtitle C requirements if (1) they manage (store or dispose) newly generated CKD on site and (2) they have prior releases from solid waste management units (SWMUs) requiring cleanup. The following classes of facilities would not be affected by this Subtitle C requirement:

(1) Facilities that presently burn hazardous waste fuels and are already subject to Subtitle C permit requirements, because cement plants burning hazardous waste fuels are already subject to facility-wide corrective action requirements (if they release hazardous constituents to the environment);

[11] Major line item costs include those of procuring and installing one clay, two sand, and two synthetic liners, leachate collection systems, and run-on/run-off controls, as well as site preparation and excavation costs.

(2) Facilities that send all newly generated waste off site for disposal; and

Exhibit 9-2

Subtitle C Disposal Costs

Facility	Estimated Current Waste Management Cost ($000/YR)	Subtitle C Costs Incremental to Current Practices					
		Loss of Revenue From CKD Sales ($000/YR)	Annualized Cost ($000/YR)	Total Capital Cost ($000)	Annualized Capital Cost ($000/YR)	Annualized Cost per MT CKD ($/MT)	Annualized Cost per MT Cement ($/MT)
A	214	87	10,613	52,595	7,848	137.2	27.9
B	104	18	3,182	11,637	1,736	112.5	3.0
C	396	61	14,382	74,383	11,099	63.4	11.6
D	148	0	2,996	10,863	1,621	116.3	9.3
E	128	106	8,569	40,749	6,080	149.6	17.8
F	140	0	4,095	17,571	2,622	60.7	14.0
G	83	0	138	21	3	153.3	0.4
H	118	0	3,958	16,736	2,497	73.6	3.7
I	80	61	2,379	7,809	1,165	144.1	4.7
SAMPLE TOTAL	1,411	333	50,312	232,364	34,671	--	--
MINIMUM	80	0	138	20	3	60.7	0.4
MAXIMUM	396	106	14,382	74,382	11,098	153.3	27.9
AVERAGE	157	37	5,590	25,818	3,852	112.3	10.3

Note: Current waste management cost is calculated from the quantity of CKD currently being wasted. Regulatory cost increments to current waste management costs are calculated from the net waste generation rate, which includes both the quantity of CKD currently sold and the quantity wasted.

(3) Facilities that generate and manage CKD on site but do not have toxic releases to ground water, soil, air, or surface waters warranting mandated cleanup or control.

Note that facilities in category (2) would not be affected even if they have SWMUs on site that release hazardous constituents, because such facilities could avoid being brought into the Subtitle C regulatory system for hazardous waste treatment, storage, or disposal facilities (TSDFs) in the first instance. For this analysis, EPA has calculated and presented potential corrective action costs for all nine CKD-generating facilities in the sample for illustrative purposes; as stated above, the five hazardous waste-burning plants in the sample are already subject to facility-wide corrective action requirements. In addition, the Agency has assumed that all historically disposed wastes at each site would require a corrective action response; this worst-case assumption obviously produces higher estimated costs than likely actual costs if CKD were to be newly

regulated as a hazardous waste. The purview of this analysis includes both active and inactive SWMUs at active CKD-generating facilities.[12]

Based upon data on corrective action strategies and costs for remediating contaminated media at cement plants and analogous industrial facilities, EPA developed two basic conceptual approaches to prospective corrective actions at CKD-generating facilities:

(1) Excavation, treatment, and secured disposal of wastes in a waste management unit (on- or off-site), referred to as Remedial Strategy 1 in this analysis; and

(2) Capping, cap maintenance, and future use restrictions, referred to as Remedial Strategy 2.

Because of the nature of the waste and contaminants in question, and the philosophy of EPA's corrective action program, the emphasis in developing these two strategies is on contaminant source control. Depending upon the severity and areal extent of contamination at individual facilities, additional steps (e.g., ground-water pumping and treatment) might be required at some facilities. EPA has not, however, included the costs of such actions in this analysis.

Estimated annualized upper bound corrective action costs at the nine sample plants range from $108,000 to almost $15 million for Strategy 1, and from $450,000 to $775,000 for Strategy 2. The wide disparity in estimated costs under Strategy 1 reflects the great differences among the sample plants with respect to existing CKD (and other waste) quantities (12,900 to 1.8 million cubic meters). If Remedial Strategy 1 is required at sites in the sample of nine, the annualized costs of regulatory compliance under Subtitle C could increase by as much as 470 percent over and above general facility and waste disposal costs; costs at all but one facility could increase by at least 30 percent. In contrast, if Strategy 2 (involving capping) were to be adopted, upper bound Subtitle C costs would increase by only 5.2 to 15.2 percent. The Technical Background Document provides a detailed description of the methods used in this analysis, and presents the site-specific potential corrective action costs developed under Strategies 1 and 2.

The results of the analysis suggest that corrective action requirements could, at some facilities, add significantly to the costs of Subtitle C disposal and, at certain plants, exceed all other costs related to Subtitle C land disposal of future CKD generation. EPA notes that plants having low net CKD generation rates, and correspondingly low on-site CKD disposal costs, could have high corrective action (and total compliance) costs, and vice versa, because of the variability in 1) the quantities of CKD and other wastes historically accumulated at each site, and 2) the environmental conditions that drive corrective action costs.

With respect to corrective action, it should be noted that the 35 or so cement plants already permitted (or in the process of being permitted) as hazardous waste burners will already be subject to facility-wide corrective action, if needed, under Subtitle C of RCRA. Thus, additional corrective action responsibilities could accrue only to the 85 plants not permitted as hazardous waste burners. How many of these plants, if any, might require corrective action would remain to be determined by site-specific studies.

---

[12] Releases from SWMUs at inactive cement plants would be controlled under Superfund.

Alternative Subtitle C Costs Under RCRA §3004(x)

The Agency has also examined a less costly disposal option that would represent somewhat less stringent disposal practice requirements under a modified form of Subtitle C. RCRA Section 3004(x) allows for flexible Subtitle C regulation for hazardous CKD waste, as well as several other special waste categories, under certain conditions. Under this provision, many significant RCRA requirements[13] may be modified at the Administrator's discretion

> "...to take into account the special characteristics of such wastes, the practical difficulties associated with implementation of such requirements, and site-specific characteristics ... so long as such modified requirements assure protection of human health and the environment."

Accordingly, EPA has estimated costs for a "Subtitle C-Minus" alternative, assuming that on-site CKD disposal would need to meet less stringent technology requirements than under full Subtitle C, due to site-specific variability in potential risk to ground water. Plants located in areas with deep ground water and relatively impermeable soils (low risk sites) would be allowed to continue using their current landfills, while plants located in areas with more vulnerable ground water would be required to construct new landfills with liners (clay for moderate risk sites, composite for high risk sites) and leachate collection systems. These less stringent liner and leachate collection system requirements result in capital cost savings of several million dollars at most of the case study plants. All plants would, however, still be required to conduct ground-water monitoring and many other activities mandated by existing standards.

Based upon the case study risk assessments presented in Chapter 6, two of the nine sample plants considered in this analysis are classified as "high" risk facilities. Annualized compliance costs for one of these two facilities are about 18 percent less than under full Subtitle C. The second high risk facility (Facility G), has a very low waste generation rate, and its operator would face the same land disposal costs under Subtitle C-Minus as it would under Subtitle C, because it relies on off-site disposal.

Six of the remaining facilities have moderate risk levels, and their costs are about 50 percent (range of 37 to 60 percent) lower than under full Subtitle C.

The difference is even more dramatic for the only low risk plant (facility D), which has compliance costs that are 78 percent lower. Overall, EPA estimates that disposal costs could average about 42 percent lower for Subtitle C-Minus than for full Subtitle C disposal. Estimated costs for the nine case study facilities under Subtitle C-Minus are shown in Exhibit 9-3.

Additional detail regarding the manner in which EPA has computed the costs for the land disposal alternatives is provided in the Technical Background Document.

---

[13] Specifically, RCRA sections 3004(c) through (g) (land disposal restrictions), (o) (minimum technology standards), (u) corrective action for continuing releases), and 3005(j) (permitting of interim status treatment, storage, and disposal surface impoundments) are covered by this provision.

Exhibit 9-3

Subtitle C-Minus Disposal Costs

Facility	Risk Level*	Estimated Current Waste Management Cost ($000/YR)	Subtitle C-Minus Costs Incremental to Current Practices					
			Loss of Revenue From CKD Sales ($000/YR)	Annualized Cost ($000/YR)	Total Capital Cost ($000)	Annualized Capital Cost ($000/YR)	Annualized Cost Per MT CKD ($/MT)	Annualized Cost Per MT Cement ($/MT)
A	Moderate	214	87	4,763	19,438	2,900	61.6	12.5
B	Moderate	104	18	1,993	4,988	744	70.5	1.9
C	High	396	61	11,817	59,834	8,928	52.1	9.6
D	Low	148	0	671	662	99	26.1	2.1
E	Moderate	128	106	4,096	15,438	2,308	71.5	8.5
F	Moderate	140	0	2,185	6,822	1,018	32.4	7.5
G	High	83	0	138	21	3	152.5	0.4
H	Moderate	118	0	2,251	7,142	1,065	41.9	2.1
I	Moderate	80	61	1,536	3,117	465	93.1	3.1
SAMPLE TOTAL		1,411	333	29,450	117,462	17,530	--	--
MINIMUM		80	0	138	21	3	26.1	0.4
MAXIMUM		396	106	11,817	59,834	8,928	152.5	12.5
AVERAGE		157	37	3,272	13,051	1,947	66.9	5.3

Note: Current waste management cost is calculated from the quantity of CKD currently being wasted. Regulatory cost increments to current waste management costs are calculated from the net waste generation rate, which includes both the quantity of CKD currently sold and the quantity wasted.

* As documented in the site-specific hazard potential analyses presented in Chapter 6.

Tailored Contaminant Release Controls

A less stringent alternative to the very complex and costly technical and administrative requirements associated with even a flexible Subtitle C approach could consist of tailored upgrades to existing land disposal units. Under this approach, the objective would be to employ site-specific contaminant release controls to ensure that CKD and its constituents were not released to adjacent environmental media, and hence, would not migrate to potential environmental and human receptors.

Based upon the results of the risk analysis presented in Chapter 6 of this report, the primary potential risk pathways of concern for most plants are fugitive dust that might result in

CKD deposition on crop and grazing land, and human health and ecological risk from stormwater run-off releases to fields and surface waters from disposal piles. Though perhaps of less frequent concern, there is also the possibility of ground-water contamination associated with the disposal of CKD in sub-grade units in areas of shallow ground water or under fractured-flow conditions.

EPA thus estimated costs for upgrading existing active land management units at the case study facilities examined in this chapter. Many possible types and degrees of upgrading could be considered under various future regulatory scenarios. For purposes of providing an illustrative example, however, the Agency estimated costs for just one set of typical upgraded practices, consisting of the following set of contaminant release control elements:

- Fugitive dust emission controls;
- Run-on/run-off controls;
- Ground-water monitoring;
- Waste pile capping at unit closure;
- Post-closure care; and
- Costs related to engineering studies and permitting.

Fugitive dust emission controls consist of water lines that are installed around the perimeter of a waste management unit; these lines are equipped with spray nozzles that are used to wet the material inside the unit on a periodic basis. Run-on/run-off controls are comprised of drainage ditches and culverts that are installed around the perimeter of the unit, and pipes and pumping that are employed to convey stormwater away from the unit. Ground-water monitoring systems involve single wells, placed at 200 foot intervals, around one-half (i.e., a down-gradient edge) of the perimeter of the unit. The screen depth is the midpoint of the aquifer. Ground-water sampling and analysis are conducted quarterly from all wells in the system. Waste pile capping involves regrading the deposited material, as necessary, then installing a two foot thick soil cap and planting grass to stabilize the cover material.[14] Post-closure care under this alternative consists of continued ground-water monitoring, maintenance of run-on/run-off controls and the integrity of the soil cap (through mowing and fertilizing the grass), and site security. Finally, costs related to engineering studies and permitting are assumed by EPA to be $250,000, all of which is incurred in Year 1.

These controls are scaled to the predicted size of a facility's waste management unit, as determined through EPA's estimates of current waste management costs. Facilities that currently employ one or more of these practices would bear no additional cost for the corresponding program element. For example, plants that currently monitor ground-water quality would experience no additional costs for this requirement. The resulting cost estimates for this type of tailored approach are presented in Exhibits 9-4 and 9-5 for the nine relevant case study cement plants.

[14] Waste management unit capping at facilities in arid areas (e.g., New Mexico) involves placement of a rock cap rather than a soil cap.

Exhibit 9-4

Tailored Contaminant Release Controls Costs: Continued Sales of CKD for Off-Site Use

Facility	Estimated Current Waste Management Cost ($000/YR)	Loss of Revenue From CKD Sales ($000/YR)	Costs Incremental to Current Practices				
			Total Capital Cost ($000)	Annualized Capital Cost ($000/YR)	Annualized Capital and O&M Costs ($000/YR)	Annualized Cost Per MT CKD ($/MT)	Annualized Cost Per MT Cement ($/MT)
A	214	0	301	45	97	1.6	0.26
B	104	0	319	48	85	3.4	0.08
C	396	0	370	55	157	0.7	0.13
D	148	0	271	40	59	2.3	0.18
E	128	0	287	43	83	2.3	0.17
F	140	0	314	47	100	1.5	0.34
G	83	0	263	39	51	56.7	0.13
H	118	0	2,032	303	364	6.8	0.34
I	80	0	427	64	83	18.9	0.17
SAMPLE TOTAL	1,411	0	4,584	684	1,079	--	--
MINIMUM	80	0	263	39	51	0.7	0.08
MAXIMUM	396	0	2,032	303	364	56.7	0.34
AVERAGE	157	0	509	76	120	10.5	0.20

Exhibit 9-5

Tailored Contaminant Release Controls Costs: Curtailed Sales of CKD for Off-Site Use

Facility	Estimated Current Waste Management Cost ($000/YR)	Loss of Revenue From CKD Sales ($000/YR)	Costs Incremental to Current Practices				
			Total Capital Cost ($000)	Annualized Capital Cost ($000/YR)	Annualized Capital and O&M Costs ($000/YR)	Annualized Cost Per MT CKD ($/MT)	Annualized Cost Per MT Cement ($/MT)
A	214	87	308	46	104	1.34	0.27
B	104	18	322	48	87	3.07	0.08
C	396	61	373	56	160	0.70	0.13
D	148	0	271	40	59	2.28	0.18
E	128	106	296	44	94	1.65	0.20
F	140	0	314	47	100	1.48	0.34
G	83	0	263	39	51	53.38	0.13
H	118	0	2,032	303	364	6.78	0.34
I	80	61	529	79	110	6.70	0.22
SAMPLE TOTAL	1,411	333	4,707	702	1,125	--	--
MINIMUM	80	0	263	39	51	0.70	0.08
MAXIMUM	396	106	2,032	303	364	53.38	0.34
AVERAGE	157	37	523	78	125	8.60	0.21

Under this set of improvements to current land disposal practices and assuming continued sale of CKD for off-site use at current levels, annualized CKD management costs increase by 40 to 300 percent, ranging from $51,000 to more than $360,000 per year. For the majority of plants, annualized CKD land management costs would increase by 40 to 80 percent. Capital costs for installing these release controls would generally fall in the $200,000 to $400,000 range, though one facility (H) would face new capital requirements of over $2.0 million because of its location in a flood plain. On a unit basis, incremental costs average about $10 per metric ton of CKD (within a range of about $1.00 to $53) and about $0.20 per metric ton of cement, ranging from $0.08 to $0.34 per ton of cement.

Using an alternative (extreme) assumption that all sales of CKD for off-site use would be curtailed (e.g., due to regulatory changes), costs for these controls increase somewhat for the five cement plants in the sample that reportedly sell CKD (Exhibit 9-5). Cost increases are due both to the loss of revenue from CKD sales and to the need to dispose of larger CKD quantities. The

range of annualized costs under this variant remains the same as in the previous case, but the average impact increases from $120,000 to just under $125,000 per year. Effects on capital requirements are relatively modest, and unit impacts, expressed as the annualized cost per metric ton of CKD, are negligible for most of the plants studied.

In the event that the continued use of the existing CKD management unit(s) resulted in release of contaminants to ground water (as determined by the quarterly ground-water sampling and analysis required under this alternative), corrective action would be necessary. As shown in the Subtitle C corrective action cost analysis presented above, the most cost-effective means of controlling releases to ground water is generally waste management unit capping with an impermeable cover to control further leachate formation within the unit. These costs would be incurred during a single year, and represent the expense of engineering and installing a composite liner and top soil layer on the entire CKD waste pile at its predicted maximum size (i.e., assuming 15 years of waste accumulation).[15]

Based on this approach, the estimated corrective action cost for any of the case study plants that might require corrective action range from just over $100,000 to about $2.2 million. The average per-facility cost is about $1.36 million assuming continued sales of CKD for off-site use at 1990 levels, or about $1.45 million if CKD sales were curtailed. Six of the nine case study plants fall within the range of $1.35 million to $1.8 million.

The Agency assumes that only a relatively small number of plants would face new to corrective action responsibilities under this scenario (and, as previously noted, these responsibilities would apply only to currently active land placement units). Only the 50 or so plants currenly generating net waste and managing it on site (and that are also not hazardous waste burners already subject to corrective action) could have new corrective action responsibilities under this costing scenario. In addition, of these 50 plants, only a fraction would be likely to have ground water contaminant releases requiring correction (based on results of the ground water risk pathway analyses reported in Chapter 6). At $1.4 million per plant, if 10 to 20 plants out of the 50, for example, were to require such corrective action, total capital costs would be on the order of $14 to $28 million for the industry as a whole.

Overall, even with corrective action for ground-water releases, this tailored upgrading of existing units is far less costly than either the full Subtitle C or the Subtitle C-Minus land management standards.

9.2.3 Alternative On-Site CKD Recycling and Recovery Techniques

There are several available alternatives to the on-site disposal of CKD. Some build upon practices that are already in widespread use, while others rely upon unconventional methods to chemically treat CKD so that it may be converted into useful products. The more prominent of these alternative approaches are discussed below.

Increasing Direct CKD Recycling

---

[15] Unlike typical Subtitle C corrective action provisions, EPA has assumed here that corrective action would affect only the units being employed to manage currently generated and disposed CKD. Other SWMUs at a cement plant would be unaffected.

Despite the clear economic incentive to recycle as much of the collected (gross) CKD as possible, there are several factors that can limit the ability of the kiln operator to directly reuse this material. The primary limitation appears to be buildup of alkalis (sodium and potassium) and sulfur in the recirculating dust load and in the clinker. As discussed at length in Chapters 3 and 8, a large percentage of plants in the U.S. must meet the ASTM standard of 0.6 percent or less alkali in most or all of their product.[16] The conventional method for complying with this limitation has been to periodically remove ("bleed") CKD from the system as a waste or by-product. An emerging alternative is to selectively reformulate raw materials input combinations to yield total alkali concentrations within acceptable product limits, despite continuous recycling of CKD. EPA's research indicates that at least some facilities have been able to recycle all of their CKD on a continuous basis in this manner through the selective use of high purity raw materials, often purchased from off-site sources.[17] At present, however, there is insufficient information either to assess the extent to which the alkali limit actually influences CKD generation across the industry, or to evaluate the national potential of raw material substitution as a feasible low-cost means of reducing or eliminating net CKD generation or its constituent levels.

Other in-plant factors that may limit direct CKD recycling can include reliance by the facility operator on CKD return methods (e.g., insufflation) that cannot accommodate the entire CKD stream generated by the facility, or on mechanical systems that are incapable of accommodating fluctuations in CKD generation rates, i.e., have no surge capacity. For example, cement plants with relatively high total dust collection rates may not be able to recycle all of this CKD through insufflation without reducing the kiln flame temperature beyond limits that would adversely affect product (clinker) quality. The operator of one of the facilities visited during EPA's 1992 CKD sampling program reportedly disposes of about 50 percent of its total collected CKD solely for this reason.[18] EPA has not been able to determine the extent to which such considerations currently limit CKD recycling across the domestic cement industry, and therefore is not in a position to predict trends or the magnitude of waste reduction opportunities associated with overcoming these types of engineering problems.

Innovative CKD Recovery Technologies

As an alternative to the predominant CKD management practices currently in use, several technologies have been developed for recovering the values contained within this material. In general, these techniques both recover the lime, silica, and other components that are used to produce cement clinker, and produce a residue containing relatively high concentrations of alkali salts that may have value as a fertilizer. The Agency has identified at least three innovative technologies for treating and recovering CKD that would otherwise be wasted. These technologies are examined here in detail because they appear to be promising

---

[16] Types I and II Portland cement (which must comply with the 0.6 percent alkali limit) comprise the vast majority of Portland cement, and Portland cement comprises the vast majority of hydraulic cement, produced and used in the U.S.

[17] For example, Calaveras Cement Company is able to continuously recycle all of the CKD generated at its Tehachapi, CA plant through the use of a low-alkali ("sweetener") sand purchased from an off-site, local source; this low alkali sand counterbalances the relatively high alkali content in the native limestone. (Source: Personal communication with Lars Oberg, Calaveras Cement Company, Tehachapi, CA, May 20, 1993.)

[18] Personal communication with Brian Graf, ESSROC Materials, Inc. (Logansport, IN), March 17, 1992.

from the standpoint of both technical and economic feasibility and pollution prevention potential. The three technologies are as follows:

1. Alkali leaching;
2. Fluid bed recovery (Fuller process); and
3. Recovery scrubbing (Passamaquoddy Technology process).

Each of these processes is based upon the premise that by removing some or most of the alkali salts contained in CKD, the treated CKD can either be returned to the clinker production process or manufactured into clinker directly. The alkali salts (primarily potassium sulfate), in turn, can then be sold (with or without further purification) for their fertilizer value. Each technology employs a different approach for separating the alkalis from the CKD, and each produces a somewhat different primary treatment residue (by-product). One of the technologies, the Passamaquoddy Technology recovery scrubber, also reportedly confers a number of other process cost savings and new revenue streams.

Using information collected from the published literature, site visits, and extensive interviews with the principals involved in developing these technologies, the Agency has developed costing equations covering the major capital equipment and O&M cost items, as well as the operating savings and by-product revenues, associated with implementing each of the three technologies. These equations and the assumptions upon which they are based are presented in the Technical Background Document.[19]

Because these technologies are not in widespread use and because of the variability in potential input and by-product market conditions across the country, EPA has constructed both "high value" and "low value" cases. In the high value case, all potential savings and by-product revenues are received by the facility operator, while in the low value case, only the most certain benefits of installing the technology are realized; other, more market-driven benefits are assumed to be zero or negative (i.e., impose costs). As a result, the Agency's predicted overall costs (benefits) of installing and operating these innovative technologies should be interpreted as ranges rather than point estimates.

In addition, to assess the cost-effectiveness of larger versus smaller CKD feed rates the Agency estimated costs twice for each technology, once with units sized for the reported gross CKD generation rate, and once using the units sized for net CKD generation rate. Despite reported scale economies associated with the technologies, EPA's analysis suggests that in general, these recovery processes are most economically applied using the net CKD generation rate as the input.[20] Another assumption made in this analysis is that the facility operators would find it more cost-effective to feed CKD that is currently being sold for off-site use to these alternative recovery technologies. That is, EPA assumed that the benefits of recovering the raw

---

[19] ICF Incorporated, op cit.

[20] One key reason for this outcome is that in EPA's analysis, CKD that is currently recycled confers no incremental raw material value, because this value has already been captured by the facility operator. Consequently, the facility operator choosing to treat the gross CKD stream receives new raw material credits <u>only</u> for the net portion of this stream, even though the equipment and operating expenses are scaled up to process the entire gross CKD quantity. Using this set of assumptions, the operator would choose to treat the gross stream only if the incremental by-product credits were sufficient to offset the additional capital and O&M costs or if the net CKD stream was of an insufficient quantity to support a particular technology.

mix values (at $9 per metric ton) coupled with the possible additional benefits from by-product revenues would outweigh the lost revenues associated with CKD sales (at $5 per metric ton) and the additional costs of scaling up the CKD processing equipment to handle the larger material volume.

EPA made a number of additional assumptions. The more important ones are as follows: 1) the three technologies are readily available, that is, they would be freely licensed and/or installed by their developers, i.e., would be available to all domestic cement plant operators;[21] 2) CKD that is treated and returned to the kiln system has a value of $9/metric ton in all cases; 3) water used, saved, or recovered has a value of $1/1000 gallons; and 4) CKD recovery processes are operated 24 hours per day, 330 days per year.

Other important costing assumptions apply differently to the high value and low value cases. For the high value case, the following additional assumptions have been applied: 1) potassium sulfate has a value of approximately $220/metric ton; 2) by-products containing significant concentrations of potassium sulfate have a value that is directly proportional to their potassium sulfate concentration; and 3) by-products are marketable throughout the region surrounding each cement plant, i.e., the entire quantities produced can be sold at the estimated price. For the low value cases, EPA has assumed that between two to 10 percent of the incoming CKD that is removed must be disposed and is sent to secure disposal at an off-site commercial landfill (either for non-hazardous solid wastes or for RCRA Subtitle C hazardous wastes), at a cost of about $50 and $277 per metric ton (including transportation), respectively.[22] Moreover, other sources of revenue related to additional by-products or services that apply to particular processes are assumed to be unavailable to the plant operator.

Finally, it is worthy of note that two of the technologies, the alkali leaching system and the Passamaquoddy Technology recovery scrubber, have to date been applied only to wet process kiln systems. In this analysis, EPA has assumed that with additional expenditures (e.g., for a rotary dryer and ancillary equipment), operators of dry process kilns would be able to adapt these two technologies to their own operations without significant technical difficulties. Accordingly, the Agency has calculated and presented data from the application of each technology to each plant in the analysis, irrespective of kiln type, and has included, where appropriate, the incremental capital and O&M costs associated with the necessary additional equipment.

Other basic design conditions for the application of the three technologies to our sample of nine net CKD-generating cement plants are summarized in Exhibit 9-6.

Alkali Leaching

The alkali leaching process is the simplest of the three technologies considered in this section; the process involves combining CKD with water at a ratio of about 1:5, agitating the mixture, allowing the leached CKD solids to settle, then recycling this slurry (muds) to the

---

[21] It should also be noted that EPA has no information on the likely licensing and/or royalty arrangements and fees that would be required to install these technologies. Accordingly, costs associated with these arrangements have not been included in this analysis, even though they might be non-trivial.

[22] For purposes of discussion in this chapter, only the results for Subtitle C disposal of the recovery residues are presented. The intermediate case results may be found in the Technical Background Document.

process and removing the liquid fraction for concentration and eventual sale as a liquid fertilizer. When installed at dry process kilns or plants, muds from the leaching process must be dried and stored in a raw feed silo, for return to the kiln to produce clinker. In wet process kilns the underflow

Exhibit 9-6

Key Design Conditions for the Nine Case Study Cement Plants

Sample Plant	Process Type	Net Annual Evaporation Rate (Inches/Yr.)	Estimated Clinker Capacity (Metric Tons)	Clinker Capacity Utilization (Percent)	Estimated Annual Clinker Production (Metric Tons/Yr.)	Percent K_2O in CKD*
A	Wet	15	449,922	80.4	361,737	3.2
B	Dry	<0	1,026,384	97.4	999,698	4.7
C	Wet	<0	1,179,230	99.8	1,176,872	4.7
D	Dry	50	430,873	71.6	308,505	1.3
E	Wet	<0	533,375	86.1	459,236	4.7
F	Wet	15	346,868	80.4	278,882	4.7
G	Wet	<0	511,604	71.4	365,286	4.7
H	Dry	<0	1,023,209	99.8	1,021,162	2.9
I	Dry	<0	544,260	87.6	476,772	4.7

* Facility-specific average calculated from data provided in response to EPA's 1992 RCRA §3007 request for plants A, D, and H; for the other plants, industry average calculated from all available responses.

slurry is either mixed with the feed slurry or pumped into the kiln through a pipe, parallel to the kiln feed. In the high value case, the liquid (potash) fertilizer solution is sold at a price of $15 per metric ton, while in the low value case, this material is not saleable and must be evaporated to the point at which it can be handled as a dry sludge, then disposed in a landfill (both Subtitle C and non-hazardous waste landfills are considered). In any event, about 90 percent of the original CKD is returned to the process as kiln feed, and the remaining 10 percent is either sold or disposed.

The leaching process technology has been in use for at least 20 years; two cement plants (at Inkom, ID and Dundee, MI) currently use the technology, which has enabled the operators of these two facilities to eliminate on-site CKD disposal. As discussed in Chapter 8, the operator of the Inkom facility (Ash Grove Cement) has been operating its leaching process for many years and has been selling its potash solution to a local agri-chemicals dealer throughout this period.[23]

The cost estimation for the alkali leaching process considers (1) the annual quantity of CKD fed to the process, (2) the facility's baseline waste management costs, (3) the K_2O concentration of the CKD, (4) whether the plant uses the wet or a dry process, and (5) the annual evaporation rate where the plant is located. The capital expenditures required for alkali leaching include the costs of procuring and installing the following equipment:

[23] Personal communication with Craig Southworth, Ash Grove Cement Company, May 20, 1993.

- A dust elevator, a leaching tank with a slow-moving agitator, pumps, and piping (all facilities);

- Either a mechanical evaporator or an evaporation pond (if the annual site-specific evaporation rate is high enough); and

- For dry process kilns only, a leached slurry (muds) dewatering system to dry the recovered dust prior to reentry to the kiln.

- Under the low value case, where the potash solution cannot be sold as a fertilizer, an additional evaporator and dewatering system are required to concentrate the potash solution to a sludge for disposal.

Capital costs are annualized and added to annual operating and maintenance expenses for an estimate of total costs. Annual savings are estimated for (1) the amount of raw feed for the kiln that is replaced by recycled CKD, and (2) the elimination of disposal costs for CKD that is no longer land disposed. In the high value case, annual income also is estimated for fertilizer (potash solution) sales. Estimated annual costs, savings, and income (if any) are combined to obtain an estimate of the annual net cost or net benefits from utilizing the process. For each facility, estimates based on processing both gross CKD and net CKD are compared; and the facility is assumed to select the volume with the lower net costs (or, the higher net income). The results of this exercise are presented in Exhibit 9-7, which displays EPA's costing results using the high value and low value cases. Detailed results of these cases, as well as the intermediate case, are presented in the Background Document.

Under the high value case where the operator can find markets for the potash solutions, the alkali leaching system yields benefits to five of the nine plants. The estimated annualized benefit for these five plants ranges from about $68,000 to more than $1.6 million, and averages $563,000 per year. The remaining four plants are predicted to experience net costs of $150,000 to just over $200,000 annually. For most plants, the better point of application of this technology appears to be to the net CKD stream, as estimated net benefits are higher for net CKD than for gross CKD at all but one of the sample facilities, and the difference for this plant is small (less than four percent), given the level of resolution of this analysis. For the five plants experiencing economic gain, these results suggest an average net benefit of almost $20 per ton of CKD and close to $1.00 per ton of cement product. The impacts on the four plants predicted to experience increased costs range from about $3.75 to $10.50 per ton of CKD processed, or from $0.15 to $0.46 per ton of finished cement.

Using more pessimistic assumptions about the marketability and regulatory status of the by-product potassium sulfate solution from alkali leaching, the predicted economic benefits are reduced substantially. If the by-product solution is not marketable and instead must be concentrated to a sludge, dewatered, and disposed in an off-site Subtitle C landfill (e.g., if the material exhibited characteristics of hazardous waste or if the Subtitle C derived-from rule were to apply), the technology is profitable for only one of the nine plants in the sample. For the other eight, estimated cost increases exceed $3.5 million annually at one facility, $1 million annually at four, and $500,000 at two others. Costs per ton of CKD at these eight plants range from about $16 per metric ton to more than $38 per metric ton, while costs per metric ton of cement range from $0.85 to $4.19.

Exhibit 9-7

Estimated Incremental Net Costs for the Alkali Leaching System

Case	Sample Facility	Burns Hazardous Waste	Total Capital Costs ($000)	Total Annual O&M and Annualized Capital Costs ($000/Yr.)	Total Annual Savings and Income ($000/Yr.)	Annual Net Cost ($000/Yr.)	Net Cost/ Metric Ton of CKD ($/MT)	Net Cost/ Metric Ton of Cement ($/MT)
High Value	A	Yes	769	406	822	-416	-5.38	-1.10
	B	No	1,642	492	337	155	5.49	0.15
	C	Yes	2,384	1,109	2,754	-1,645	-4.77	-1.33
	D	No	1,558	455	304	150	5.83	0.46
	E	No	639	359	633	-274	-4.78	-0.57
	F	Yes	732	332	747	-414	-5.81	-1.41
	G	No	51	23	91	-68	-75.08	-0.18
	H	Yes	2,353	697	496	201	3.74	0.19
	I	Yes	1,215	390	216	175	10.57	0.35
	Wtd. Avg., Haz. Waste Burners		1,491	587	1,007	-420	-3.72	-0.60
	Wtd. Avg., All Facilities		1,260	474	711	-237	-3.16	-0.37
Low Value (Subtitle C Disposal of Residual Alkalies)	A	Yes	1,664	2,036	661	1,375	17.77	3.62
	B	No	2,161	1,142	251	891	31.51	0.85
	C	Yes	3,495	5,371	1,706	3,665	16.16	2.97
	D	No	2,052	1,052	282	770	29.90	2.38
	E	No	1,399	1,594	459	1,135	19.81	2.35
	F	Yes	1,537	1,756	530	1,226	18.18	4.19
	G	No	132	62	88	-27	-29.38	-0.07
	H	Yes	3,089	1,862	398	1,465	27.23	1.37
	I	Yes	1,604	794	166	628	38.03	1.25
	Wtd. Avg., Haz. Waste Burners		2,278	2,364	692	1,672	18.92	2.40
	Wtd. Avg., All Facilities		1,904	1,741	505	1,237	20.08	1.95

Because the alkali leaching technology is the least complex of the three alternatives examined, it has the lowest capital costs for equipment and installation. Total capital investment costs range from less than $1 million to about $2.4 million in the high value case, even at dry process plants, which require substantially more equipment than wet process plants to adopt this technology. The average annualized capital cost for the sample of nine plants is just over $181,000 in the high value case. Under the low value cases, where additional equipment is required to concentrate the potash solution and dry the sludge adequately for land disposal, total and annualized capital investment requirements more than double at several plants and on average increase by about 50 percent.

For the five plants at which this technology yields a positive return under the high value case, annual return on total investment ranges from 54 percent to 133 percent. The average net annual return across the nine case study plants is 18.8 percent under the high value case.

Fluid Bed Dust Recovery

The Fuller Company's fluid bed pocess does not remove alkalis from CKD to prepare it for reintroduction to the kiln, but instead thermally treats the dust to produce clinker directly from the CKD, while concentrating the alkalis into a by-product stream for sale as a fertilizer or disposal as a processing residue. The fluid bed process can be designed to thermally treat either gross or net CKD. In the fluid bed process, CKD is pelletized and calcined into clinker on a fluid bed instead of in a typical rotary kiln; clinker yields are on the order of 60 percent of the CKD treated. The fluid bed process also produces a by-product material representing about 10 percent of the original input CKD volume. The remaining 30 percent of the incoming CKD is removed in the form of exhaust gases (ignition loss).[24] The fluid bed process has been demonstrated only on a pilot scale, though several evaluations are underway worldwide. A detailed description of the fluid bed process may be found in Chapter 8.

In addition to the initial purchase and installation costs of the fluid bed reactor itself, the required capital expenditures include the costs of procuring and installing feed tanks, a pug mill, pelletizers, a rotary dryer, a roll crusher, a screen, dust collectors, a surge bin, a heat exchanger, a fluid bed cooler, a spray tower, fans, piping, and pumps. Because this technology produces cement clinker directly rather than a treated CKD slurry, there is no difference in required equipment or cost when applied to dry versus wet process kilns. Annual savings are estimated for the elimination of disposal costs for CKD that is no longer land-disposed, and annual income is estimated for the sale of clinker that is produced by the process. Under the high value case, the operator receives additional revenue from the sale of the by-product (fertilizer) dust. Under the low value case, this material is disposed in an off-site landfill (as a Subtitle C-regulated waste). Costing results for the high value and low value cases are displayed in turn in Exhibit 9-8.

Under the high value case, application of the fluid bed CKD recovery system yields substantial economic benefits for one of the nine facilities. The most cost-effective level of application is the net CKD stream, though two plants produce too little net CKD to use net CKD as the input, based on minimum fluid-bed technology sizing requirements. Because application of the technology to the gross CKD stream would impart net costs rather than

[24] Ignition loss represents the thermal decomposition of hydrates and carbonates in untreated CKD to form solid oxides (e.g., CaO, MgO) that comprise the clinker and CKD, and H_2O and CO_2 that are emitted as stack exhaust gases.

benefits and because other available technologies could impart net benefits at these plants, EPA has assumed that the operators of plants G and I would choose not to install the fluid bed reactor system. For the

Exhibit 9-8

Estimated Incremental Net Costs for the Fuller Fluidized Bed System

Case	Sample Facility[a]	Burns Hazardous Waste	Operating Days Per Year	Total Capital Costs ($000)	Total Annual O&M and Annualized Capital Costs ($000/Yr.)	Total Annual Savings and Income ($000/Yr.)	Annual Net Cost ($000/Yr.)	Net Cost/ Metric Ton of CKD ($/MT)	Net Cost/ Metric Ton of Cement[b] ($/MT)
High Value	A	Yes	330	9,641	2,630	2,454	176	2.27	0.46
	B	No	253	5,090	1,163	748	415	14.67	0.40
	C	Yes	330	24,307	6,529	6,962	-434	-1.91	-0.35
	D	No	231	5,090	1,094	685	409	15.90	1.26
	E	No	330	7,446	2,058	1,787	270	4.72	0.56
	F	Yes	330	8,567	2,287	2,093	194	2.87	0.66
	H	Yes	330	7,052	1,883	1,676	207	3.85	0.19
	Wtd. Avg., Haz. Waste Burners		330	12,392	3,332	3,293	36	0.34	0.05
	Wtd. Avg., All Facilities		305	9,599	2,520	2,344	177	2.31	0.26
Low Value (Subtitle C Disposal of Residual Alkalies)	A	Yes	330	9,641	4,039	1,806	2,234	28.87	5.88
	B	No	253	5,090	1,569	569	1,000	35.37	0.95
	C	Yes	330	24,307	10,661	5,063	5,597	24.68	4.53
	D	No	231	5,090	1,430	535	895	34.75	2.76
	E	No	330	7,446	3,100	1,307	1,793	31.29	3.72
	F	Yes	330	8,567	3,515	1,528	1,987	29.46	6.79
	H	Yes	330	7,052	2,861	1,225	1,635	30.41	1.53
	Wtd. Avg., Haz. Waste Burners		330	12,392	5,269	2,406	2,863	26.93	3.84
	Wtd. Avg., All Facilities		305	9,599	3,882	1,719	2,163	28.21	3.13

[a] Facilities G and I do not generate sufficient quantities of net CKD to meet the minimum practical scale for a commercial scale fluid bed system.

[b] Includes incremental cement clinker production arising from operation of the fluidized bed system.

plant at which application of the fluid bed recovery technology confers estimated benefits, cost savings amount to about $434,000 annually, or 35 cents per metric ton of cement. Net costs for the remaining six plants are in the $175,000 to $410,000 range, suggesting a unit cost of $2.25 to almost $16 per metric ton of CKD processed, and $0.19 to $0.66 per metric ton of cement.

Under the low value case, the process would not produce net savings for any plant in the sample. Because of the relatively large quantity of by-product generated by this process (10 percent of the incoming CKD quantity), Subtitle C regulation of the process residue would increase net costs dramatically. Typical and average plant costs would increase by about 10 times (to more than $2.1 million annually), and unit costs would approach or exceed $4 per metric ton of cement at half of the plants in the sample.

Estimated total capital costs average almost $9.6 million. Under the high value case, total and annualized capital costs are on average almost eight times higher for the fluid bed reactor system than for the alkali leaching system. Under the low value case, this gap narrows to a factor of five, because in contrast to the alkali leaching system, no additional equipment would be required for the fluid bed system if the by-product had to be disposed. At the one plant for which the estimated net benefit of installing this technology is positive, the net annualized return on total invested capital is 1.8 percent.

EPA's research suggests that the Fuller Company process is unique among the CKD treatment technologies in that it could be constructed as a stand-alone facility to receive CKD from other sources and produce cement clinker and by-product fertilizer. Such an arrangement would not require capital investment on the part of the cement company and it would not directly affect the production process at the CKD-generating cement plant. EPA has not formally analyzed this possibility because no examples are available to provide the necessary data. Nonetheless, the developer of this technology believes that this concept could be economically viable if applied in a suitable location, and has conducted preliminary evaluations of this idea.[25]

The Passamaquoddy Technology Flue Gas Desulfurization Process

The flue gas desulfurization process, or recovery scrubber, developed by Passamaquoddy Technology, Inc. with support from the U.S. Department of Energy's Clean Coal Technology Program, reportedly enables all CKD to be recycled as kiln feed by removing alkalies, chlorides, and sulfates from the dust. The recovery scrubber produces potassium sulfate fertilizer crystals (at a rate of about two percent of CKD processed, by weight) as well as reusable cement kiln feed (the remaining 98 percent), and reportedly discharges only scrubbed exhaust gases (and internally consumed distilled water). The process also may produce several additional income streams. First, the process can accommodate alkaline ashes of various types as feedstock materials; the operator of a recovery scrubber may be able to earn tipping fees from ash generators. Second, because reported flue gas scrubbing efficiency is on the order of 90-95 percent, the facility may be able to burn higher sulfur coal (at lower cost) than might be permitted otherwise, under SO_2 emissions limits. Moreover, if EPA should expand its SO_2 emission allowance trading program to include industrial facilities as well as public utilities,[26] cement plants equipped with the recovery scrubber could conceivably sell emission allowances on the open market. Because some of these prospective benefits are related to the presence of significant amounts of sulfur in the kiln combustion gases, this technology might not be suitable for application to the small percentage of U.S. cement plants that do not rely upon coal for at

[25] Personal communication with Sidney Cohen, The Fuller Company, July 20, 1993.

[26] Keynote Address by Carol Browner, EPA Administrator, at the Clean Air Marketplace 1993. September 9, 1993.

least part of their energy needs.[27] A detailed description of the recovery scrubbing process may be found in Chapter 8.

This system has been installed and is operating at the Dragon Products, Inc. cement plant in Thomaston, ME. According to a representative of Passamaquoddy Technology, this plant is recycling all of its newly generated CKD, is producing high-purity potassium sulfate crystals, and has recently signed contracts for receipt of alkaline ash generated off site, which will be fed to the recovery scrubber system in the same manner as the CKD.[28] Dragon Products anticipates receiving a $30 per ton tipping fee for accepting this material.

The Passamaquoddy Technology recovery scrubber is by far the most complex of the recovery technologies examined in this chapter. The capital equipment and associated costs of the technology can be grouped into major functional categories, as follows:

- Gas handling equipment (duct work and fan);
- CKD processing equipment (mixing tank, reaction tank, pumps, and piping);
- Fertilizer production equipment (heat exchanger, circulating pump, evaporation tank, condenser, and centrifuge);
- Equipment controls (instrumentation, electrical distribution, and miscellaneous construction - also includes engineering, design, and project management); and
- A dewatering system (for dry process kilns only - pressure filter press, steel filtrate tank, filter cake storage bin, rotary drum dryer, conveyor, pumps, piping, electrical, and instrumentation).

The cost estimation for the recovery scrubber process includes the following elements: (1) the annual quantity of CKD; (2) the process type (wet or dry); (3) the percentage of K_2O in the dust feed; and (4) the facility's baseline waste management costs. For the high value case, EPA also assumes: (1) the scrubber is designed with excess capacity and processes not only currently generated CKD but also CKD from stockpiles and/or alkali ash from off-site sources (at a ratio of 5:2); (2) the facility can sell excess SO_2 allowances for $300 per ton SO_2; (3) the plant switches from low sulfur coal to high sulfur coal, at savings of $2 per ton of coal; (4) the potassium sulfate output is sold as fertilizer at $175 per metric ton; and (5) off-site sources pay the facility $33 per metric ton to receive their alkali ash, which is used as an input to the process. In the low value cases, the recovery scrubber is sized only to accommodate current on-site CKD generation, and none of the additional sources of savings or revenue are assumed to be available to the facility operator. In addition, off-site land disposal of the by-product crystals is required, in either a commercial Subtitle D or Subtitle C landfill. Costing results for the high value and low value (Subtitle C Disposal) cases are displayed in Exhibit 9-9.

---

[27] Only 10 of the 81 respondents to the 1991 PCA Survey providing useable data indicated that coal was not used as a primary kiln fuel at their plants.

[28] Personal communication with Garrett Morrison, Passamaquoddy Technology, Inc., July 2, 1993.

Exhibit 9-9

Estimated Incremental Net Costs for the Passamaquoddy Technology Recovery Scrubbing Process

Case	Sample Facility	Burns Hazardous Waste	Total Capital Costs ($)	Total Annual O&M and Annualized Capital Costs ($000/Yr.)	Total Annual Savings and Income ($000/Yr.)	Annual Net Cost ($000/Yr.)	Net Cost/ Metric Ton of CKD ($/MT)	Net Cost/ Metric Ton of Cement ($/MT)
High Value Case	A	Yes	10,552	1,996	2,709	-712	-8.87	-1.87
	B	No	24,742	5,057	5,112	-55	-0.32	-0.05
	C	Yes	22,738	4,247	8,621	-4,375	-19.32	-3.54
	D	No	5,488	1,113	780	333	12.94	1.03
	E	No	9,142	1,716	2,206	-490	-8.55	-1.02
	F	Yes	10,568	1,911	2,695	-784	-10.99	-2.68
	G	No	12,790	2,326	2,736	-410	-4.31	-1.07
	H	Yes	9,751	1,946	1,705	241	4.48	0.22
	I	Yes	5,021	1,006	669	336	20.38	0.67
	Wtd. Avg., Haz. Waste Burners		11,649	2,221	3,280	-1,059	-11.78	-1.52
	Wtd. Avg., All Facilities		12,267	2,369	3,026	-657	-7.40	-1.03
Low Value (Subtitle C Disposal of Residual Alkalies)	A	Yes	6,525	1,586	683	903	11.67	2.38
	B	No	4,895	1,094	263	831	29.39	0.79
	C	Yes	14,402	3,641	1,772	1,870	8.25	1.51
	D	No	3,664	874	293	580	22.53	1.79
	E	No	5,958	1,385	475	909	15.87	1.89
	F	Yes	6,613	1,479	549	930	13.79	3.18
	G	No	430	76	88	-12	-12.85	-0.03
	H	Yes	6,553	1,562	421	1,141	21.21	1.06
	I	Yes	3,516	796	173	623	37.73	1.24
	Wtd. Avg., Haz. Waste Burners		7,522	1,812	720	1093	12.37	1.57
	Wtd. Avg., All Facilities		5,840	1,388	524	864	14.03	1.36

In the high value case, installation of the recovery scrubber yields net benefits for six of the nine facilities with positive net CKD generation rates. The other three have relatively low net CKD generation rates and operate dry process plants, both of which would make the economics of this alternative less favorable than they would be otherwise; the projected cost impacts are on the order of only $240,000 to $340,000 per year. The optimal application point for six of the nine plants is to the net CKD stream rather than the gross CKD quantity. For two of the remaining plants (A and B) the differences are marginal. For the six plants in the sample showing a positive return on investment, net benefits average more than $1.1 million per year, and range from $55,000 to almost $4.4 million annually. On a unit basis, benefits for the plants under this case average about $7.40 per metric ton of CKD and $1.03 per metric ton of cement.

Under the low value case, the recovery scrubber process produces net benefits at only one plant in the sample, and is uniformly most cost-effective when applied to the net CKD generation rate. Under the assumption of hazardous waste disposal of the recovery scrubber residue, the process is predicted to generate a (small) net benefit at only one plant, which has a very low waste generation rate and a relatively high estimated current disposal cost. Unit costs average about $1.35 per ton of cement, and range from about zero to $3.20.

Capital installation costs associated with this technology are comparable to those for the fluid bed technology, and are considerably higher than those for the alkali leaching system. Total capital costs under the high value case average more than $12.2 million, and range up to $24.7 million. Under the low value case, capital costs are actually lower, because in the absence of expected revenues from receipt of alkaline ash from off-site and SO_2 emission allowance sales, the technology would be designed and installed at a significantly (about 50 percent) smaller scale. In these cases, capital installation costs average about $5.8 million and run from $3.5 to about $6.5 million for most of the sample facilities. As with the other technologies, capital costs would be unaffected by whether the process residue is managed in non-hazardous or hazardous waste management units, because all such disposal is assumed to occur at off-site locations, due to scale economies.

Under the high value case, the annualized return on total invested capital for the six plants with estimated net benefits from installing the recovery scrubber ranges from 0.2 to about 19 percent, with four of the facilities falling in the range from 3.2 to 7.4 percent per year. Across the nine case study plants, the average annualized return on capital is 5.4 percent. These rates of return are substantially lower than those associated with the alkali leaching system, even though total net benefits are in all cases higher.

9.2.4 Other Operating Practices

In addition to modifying the chemical characteristics of and/or management practices applied to CKD after it is removed from the kiln system, it may be possible to effect reductions in disposal rates by relaxing some of the constraints that appear to limit CKD recycling or by attempting to modify some of the inputs that may be resulting in increased generation and removal of dust. Two possible approaches are presented and briefly discussed in this section.

Revised Standards for Cement Products

One possible means for overcoming recycling limitations imposed by-product quality concerns would be to modify the ASTM alkali limit, at least for certain applications. The purpose of the ASTM standard is to prevent reactions between the alkalis in cement and the

lime and silica in the aggregates used in making concrete. Such reactions are to be avoided because they expand, crack, and weaken the concrete. If the reactions could be reliably prevented by some means other than limiting the alkali content of cement, specifications for the alkali content of cement could be relaxed, and more CKD could be recycled. At least some members of the cement industry favor such an approach, and the Mid-Atlantic Regional Concrete Technical Committee is considering a recommendation favoring relaxed cement alkali standards in combination with concrete aggregate standards (the committee consists of representatives from the cement, aggregate, and concrete industries, state and federal highway agencies, and the U.S. Army Corps of Engineers).[29] At present, however, it is unclear whether any such modifications in product standards will be undertaken. EPA has not been able to evaluate the feasibility of implementing this type of approach to reducing CKD removal and disposal rates.

Curtailing Use of Hazardous Waste Fuels

A second possible means of increasing recycling rates could be to reduce the use of hazardous wastes as fuel. Only a subset of all cement plants and kilns burn hazardous waste. Kilns at twenty-five cement plants are known to burn hazardous waste, while about 10 additional plants have received and/or have applied for approval to do so. These thirty-five plants represent less than a third of all cement plants in the country, and constitute about 25 percent of total industry clinker capacity. PCA Survey data show, however, that the hazardous waste burning plants tend to generate disproportionate quantities of CKD: the Agency projects that almost half of the net CKD generated and land-disposed is associated with hazardous waste-burning cement plants. Because (as stated above) hazardous waste provides about seven percent of the industry's energy inputs and hazardous waste-burning plants constituted 25 percent of the industry (in terms of clinker capacity) it can be estimated that hazardous waste provides about 28 percent of the energy for the subset of kilns that use it.[30]

If the Bevill Exclusion for CKD were to be removed, one potential response of affected cement plant operators could be to suspend hazardous waste burning in their kilns. The costs of this response, per metric ton of cement, are calculated as follows:

(1) the amount of energy derived from hazardous waste fuel per metric ton of cement, multiplied by the sum of

(2a) the revenues received for accepting hazardous waste per unit of energy, plus

(2b) the cost, per unit of energy, of replacing the energy value of the hazardous waste with fossil fuel.

As shown in Exhibit 9-10, EPA estimates that for the five hazardous waste-burning plants in the sample of nine, the average gross benefit from burning hazardous waste amounted to

---

[29] Reardon, Patrick W., Jr., "Low Alkali Cement Requirements for Northeast U.S. Markets," Cement Technology, November 1991, pp. 61-63.

[30] Assuming that energy use per unit of clinker production does not differ on average between the facilities that burn hazardous waste and those that do not, and if hazardous waste burners constitute 25 percent of clinker capacity, then the hazardous waste burners also use 25 percent of all of the fuel used in the industry. If hazardous waste provides seven percent of all energy, it must provide 28 percent (i.e., 7 percent divided by 25 percent) of the energy, on average, at the subset of facilities that burn hazardous waste.

Exhibit 9-10

Economic Benefits from Burning Hazardous Waste Fuels

Sample Plant	Quantities of Hazardous Waste Fuels Received		Gross Benefits from Hazardous Waste Fuel Burning			
	Solid (Metric Tons)	Liquid (Metric Tons)	Revenues from Receipt of Wastes ($000)	Fuel Cost Savings ($000)	Total Benefit ($000/yr.)	Benefit per Metric Ton of Cement ($/yr.)
A	11,014	36,638	12,325	1,094	13,419	35.33
C	0	68,438	12,821	1,759	14,581	11.80
F	86	29,644	5,596	772	6,369	21.75
H	0	44,474	8,332	1,176	9,508	8.87
I	548	131	296	13	310	0.62
Average	2,330	35,865	7,874	963	8,837	15.67

approximately $15.70 per metric ton of cement,[31] which includes both revenues from receiving hazardous waste from generators and alternative fuel cost savings.[32] These do not reflect the permitting, engineering, administrative, or operating costs associated with installing a hazardous waste fuel burning operation at a cement plant; they are presented for illustrative purposes only.

The average value taken across the five hazardous waste burners in the sample obscures a high degree of variability in the benefit of this practice among the individual plants. One of the plants in the sample reported burning less than 1,000 metric tons of hazardous waste, which was less than one unit of hazardous waste for every 500 units of cement produced. At the other extreme, another plant operator reported consuming almost 50,000 tons of hazardous waste fuel, or more than one unit of hazardous waste for every 10 units of cement. Consequently, estimated revenues from hazardous waste burning range from less than $0.70 to more than $35 per metric ton of cement.

---

[31] Removal of the one facility with a very low hazardous waste fuel consumption rate raises the average benefit to the remaining four plants to more than $19.40 per metric ton of cement.

[32] According to a recent (May 1993) draft report published by EPA's Office of Waste Programs Enforcement, Estimating Costs for the Economic Benefits of RCRA Non-Compliance, the median value received by cement plants for burning bulk, non-halogenated solvents and organic liquids (the most prevalent hazardous waste fuel) was about $170 per short ton, with a heating value of about 10,000 Btu per pound, which is about $34 per million Kcal. Prices are even higher for halogenated solvents and organic liquids, for wastes in drums, or for solid wastes. EPA estimates that bulk solid hazardous wastes bring a typical price of $450 per short ton. To this value must be added the cost of replacing the hazardous waste with fossil fuel, which EPA estimates to be approximately $4.00 per million Kcal (see Exhibit 2-22 of this report) assuming that bituminous, subbituminous, or lignite coal would be substituted for the hazardous waste.

This wide range of potential financial impacts resulting from curtailment of hazardous waste fuel burning suggests that this alternative might be a cost-effective response to a change in the regulatory status of CKD for some operators under certain conditions.[33] This high degree of variability also suggests, however, that the costs of suspending hazardous waste fuel burning at some cement plants would exceed the costs of on-site Subtitle C disposal of CKD.

9.2.5 Summary of the Costs of Alternative CKD Management Methods

From the foregoing, it is clear that the operators of U.S. cement plants have a number of options for managing the CKD that they generate. In most cases, current practices involve on-site land disposal of CKD in unlined, non-engineered piles or portions of quarries. Some operators, however, have been successful in either directly recycling a major portion of the gross CKD that they generate or selling a substantial fraction of the dust that is not recycled, or both. At a few facilities, novel approaches to recovering CKD that would otherwise be disposed have been implemented, though the technical and economic feasibility of some of these technologies have not been demonstrated at a full commercial scale. CKD also could be managed under more stringent controls in accordance with existing or modified RCRA Subtitle C standards. This would involve constructing on-site (because of scale economies) hazardous waste landfills, and disposing waste CKD in these new units. Alternatively, regulations could establish tailored contaminant release controls that would be installed and operated within the facility's existing waste management system. Finally, in the event of a change in the RCRA regulatory status of CKD, there might be incentives for kiln operators that burn hazardous waste fuels to cease this practice in order to avoid regulatory compliance costs.

To facilitate further examination of and comparisons among these disparate approaches to CKD management, the comparative costs of adopting these alternative practices are summarized in Exhibits 9-11 through 9-13. Exhibit 9-11 presents summary statistics on the total estimated cost impacts of adopting these strategies for the nine sample plants and for the subset of five facilities that burn hazardous waste fuels. Exhibits 9-12 and 9-13 display these results in normalized form; Exhibit 9-12 provides estimated facility-level cost impacts per metric ton of CKD, while Exhibit 9-13 provides these results on a per ton of cement product basis. Each exhibit provides impacts incremental to the estimated costs of current practices, and, where applicable, displays both high value and low value results.

Exhibit 9-11 shows that, for the median and average plant results, two of the CKD recovery technologies indicate net benefits (revenues) to the facility operator under the high value case, for both the nine case study plants and the subset of five hazardous waste-burning facilities. Tailored contaminant release controls and the third CKD recovery technology under the high value case have the lowest costs. These alternative approaches would approximately double current management costs, assuming the median and average values in the exhibit. From there, the cost of alternative practices jumps substantially, to typical costs of more than $1 million annually per facility. In this category would fall the three CKD recovery technologies under the low value case, Subtitle C and Subtitle C-Minus land disposal, and cessation of hazardous waste burning. These results are generally consistent between the group of nine and

---

[33] In addition, if social costs were analyzed, they would include the lost surplus to suppliers of hazardous wastes (i.e., the price each supplier would be willing to pay to be rid of its hazardous waste, minus the price each supplier actually paid). This lost surplus could be a significant loss to society, though it would not be a factor in the decisions of cement kiln operators except to the extent that the price for accepting hazardous waste at kilns that remain in the business of burning hazardous wastes could rise substantially.

the sub-set of five, with the obvious exception of the alternative of cessation of hazardous waste burning.

Exhibit 9-11

Total Incremental Annualized Costs of CKD Management Alternatives for EPA Case Study Cement Plants

CKD Management Alternative	All Facilities in Sample (9 Plants)				Hazardous Waste Burners in Sample (5 Plants)			
	Minimum ($000/yr)	Median ($000/yr)	Maximum ($000/yr)	Weighted Average ($000/yr)	Minimum ($000/yr)	Median ($000/yr)	Maximum ($000/yr)	Weighted Average ($000/yr)
Recovery Scrubber/ High Value	-4,375	-410	336	-657	-4,375	-712	336	-1,059
Alkali Leaching/High Value	-1,645	-68	201	-237	-1,645	-414	201	-420
Tailored Contaminant Release Controls/Sale of Dust	51	83	364	144	83	100	364	160
Fluidized Bed/High Value	-434	207	415	177	-434	176	207	36
Tailored Contaminant Release Controls/No Sale of Dust	51	100	364	148	100	110	364	164
Recovery Scrubber/Low Value	-12	903	1,870	864	623	930	1,870	1,093
Alkali Leaching/Low Value	-27	1,135	3,665	1,237	628	1,375	3,365	1,672
Fluidized Bed/Low Value	895	1,793	5,597	2,163	1,635	1,987	5,597	2,863
Subtitle C- Landfill	138	2,185	11,817	6,590	1,536	2,251	11,817	7,566
Stop Burning of Hazardous Waste	0	310	14,581	4,910	310	9,508	14,581	8,837
Subtitle C Landfill	138	3,958	14,382	9,511	2,379	4,095	14,382	10,437

Per plant averages.

Exhibit 9-12

Annualized Incremental Costs of CKD Management Alternatives per Metric Ton of CKD for EPA Case Study Cement Plants

CKD Management Alternative	All Facilities in Sample (9 Plants)				Hazardous Waste Burners in Sample (5 Plants)			
	Minimum ($/MT)	Median ($/MT)	Maximum ($/MT)	Weighted Average ($/MT)	Minimum ($/MT)	Median ($/MT)	Maximum ($/MT)	Weighted Average ($/MT)
Recovery Scrubber/ High Value	-19.32	-4.31	20.38	-7.40	-19.32	-8.87	20.38	-11.78
Alkali Leaching/High Value	-75.08	-4.78	10.57	-0.37	-5.81	-4.77	10.57	-0.60
Fluidized Bed/High Value	-1.91	3.85	15.90	2.31	-1.91	2.27	3.85	0.34
Tailored Contaminant Release Controls/No Sale of Dust	0.70	2.28	53.38	2.03	0.70	1.48	6.78	1.89
Tailored Contaminant Release Controls/Sale of Dust	0.70	2.30	56.70	2.53	0.70	1.60	18.90	2.40
Recovery Scrubber/ Low Value	-12.85	15.87	37.73	14.03	8.25	13.79	37.73	12.37
Alkali Leaching/Low Value	-29.38	27.23	38.03	20.08	16.16	18.18	38.03	18.92
Fluidized Bed/Low Value	24.68	30.41	35.37	28.21	24.68	28.87	30.41	26.93
Subtitle C- Landfill	26.10	61.60	152.48	53.20	32.39	52.10	93.10	51.05
Stop Burning Hazardous Waste	0.00	18.75	176.78	79.74	18.75	94.43	176.78	100.00

Subtitle C Landfill	60.71	116.33	153.30	90.80	60.71	73.59	144.10	80.16

On a cost per unit of waste basis, the results are quite similar, with respect to both the direction and the relative magnitude of cost impacts. As shown in Exhibit 9-12, the recovery scrubber and alkali leaching systems again show net benefits in the central tendency (median and weighted average), high value case, and adoption of the fluidized bed recovery system or tailored contaminant release controls imposes impacts of about the same magnitude as current practices. CKD recovery under the low value case and the Subtitle C landfill alternatives would impose impacts ranging between $14 and $91 per ton CKD, though these values are far lower than the unit cost of commercial off-site Subtitle C disposal, and all but the Subtitle C landfill and cessation of hazardous waste burning alternatives are less costly than typical off-site non-hazardous waste disposal.

Incremental costs per ton of cement product follow much the same pattern. Exhibit 9-13 shows that the alternative practices fall in the same rank on a cost per unit product basis, and that the central tendency measures (median and weighted average) suggest impacts of less than $0.30 per metric ton of cement for five of the alternatives to current practice. CKD recovery under the low value case imposes estimated cost impacts of between about $1.35 and $3.15 per metric ton of cement, or 2.4 to 5.7 percent of the value of sales (about $55 per metric ton). The Subtitle C land disposal and cessation of hazardous waste burning alternatives suggest typical impacts exceeding $5 per metric ton, or more than the typical net margin received by cement producers. In a few extreme cases, estimated impacts approach the typical sales price of cement.

Finally, capital investment requirements for installing these various CKD management alternatives vary widely, as displayed in Exhibit 9-14. The capital costs of cessation of burning hazardous waste are assumed to be negligible given EPA's costing assumptions regarding sunk capital. Installation of contaminant release controls on existing CKD management units would require highly variable investments of capital on the part of the facility operator, due to the variability of existing management controls at CKD-generating plants and site-specific environmental conditions (and associated risk potential). In most cases, however, capital investment requirements for this alternative do not exceed $350,000 per plant. Installation of CKD recovery technologies or Subtitle C landfill disposal alternatives, on the other hand, would require much greater capital resources. Weighted average capital investment costs range from about $1.2 million to almost $50 million. As stated above, the alkali leaching process is the least complex and capital-intensive of the CKD recovery technologies, and occupies the lower end of this cost range. Typical values for the capital costs of the other alternatives are in the $6 million to $12 million range. Not surprisingly, the full Subtitle C land disposal alternative imposes the greatest capital costs, due to the complexity and expense of installing multiple liner and leachate collection systems and other aspects of regulatory compliance.

9.3 POTENTIAL IMPACTS OF ALTERNATIVE MANAGEMENT PRACTICES

Based on the cost estimates described in the preceding section, this section provides the Agency's perspectives on potential impacts from implementing these alternative management practices, first at the level of our typical case study cement plants and then for the industry as a whole.

9.3.1 Individual Plant-Level Impacts

In considering impacts at the individual plant level, the added cost of an alternative dust management practice relative to the market value of cement produced (added cost per dollar of sales) provides a direct measure of relative importance and a first general measure of impact.

Exhibit 9-13

Annualized Incremental Costs of CKD Management Alternatives per Metric Ton of Cement for EPA Case Study Cement Plants

CKD Management Alternative	All Facilities in Sample (9 Plants)				Hazardous Waste Burners in Sample (5 Plants)			
	Minimum ($/MT)	Median ($/MT)	Maximum ($/MT)	Weighted Average ($/MT)	Minimum ($/MT)	Median ($/MT)	Maximum ($/MT)	Weighted Average ($/MT)
Recovery Scrubber/ High Value	-3.54	-1.02	1.03	-1.03	-3.54	-1.87	0.67	-1.52
Alkali Leaching/High Value	-1.41	-0.18	0.46	-0.37	-1.41	-1.10	0.35	-0.60
Fluidized Bed/High Value	-0.35	0.46	1.26	0.26	-0.35	0.19	0.66	0.05
Tailored Contaminant Release Controls/Sale of Dust	0.08	0.17	0.34	0.20	0.13	0.26	0.34	0.21
Tailored Contaminant Release Controls/No Sale of Dust	0.08	0.20	0.34	0.21	0.13	0.27	0.34	0.22
Recovery Scrubber/ Low Value	-0.03	1.51	3.18	1.36	1.06	1.51	3.18	1.57
Alkali Leaching/Low Value	-0.07	2.35	4.19	1.95	1.25	2.97	4.19	2.40
Fluidized Bed/Low Value	0.95	3.72	6.79	3.13	1.53	4.53	6.79	3.84
Subtitle C- Landfill	0.40	3.10	12.50	7.96	2.10	7.50	12.50	8.63
Stop Burning Hazardous Waste	0.00	0.62	35.33	8.71	0.62	11.80	35.33	15.67
Subtitle C Landfill	0.40	9.30	27.90	13.27	3.70	11.60	27.90	13.60

Exhibit 9-14

Capital Investment Requirements for Implementing CKD Management Alternatives for EPA Case Study Cement Plants

CKD Management Alternative	All Facilities in Sample (9 Plants)				Hazardous Waste Burners in Sample (5 Plants)			
	Minimum ($ 000)	Median ($ 000)	Maximum ($ 000)	Weighted Average ($ 000)	Minimum ($ 000)	Median ($ 000)	Maximum ($ 000)	Weighted Average ($ 000)
Stop Burning Hazardous Waste	0	0	0	0	0	0	0	0
Tailored Contaminant Release Controls/Sale of Dust	263	314	2,032	501	301	370	2,032	554
Tailored Contaminant Release Controls/No Sale of Dust	27	167	1,887	507	308	373	2,032	560
Alkali Leaching/High Value	51	1,216	2,384	1,260	732	1,216	2,384	1,491
Alkali Leaching/Low Value	132	1,664	3,495	1,904	1,537	1,664	3,495	2,278
Recovery Scrubber/ Low Value	430	5,958	14,402	5,840	3,516	6,553	14,402	7,522
Fluidized Bed/High Value	5,090	7,446	24,307	9,599	7,052	8,567	24,307	12,392
Fluidized Bed/Low Value	5,090	7,446	24,307	9,599	7,052	8,567	24,307	12,392
Recovery Scrubber/ High Value	5,021	10,552	24,742	12,267	5,021	10,552	22,738	11,649
Subtitle C- Landfill	21	6,823	59,834	30,712	3,117	7,142	59,834	36,149
Subtitle C Landfill	21	16,736	74,383	47,105	7,809	17,571	74,383	52,404

Exhibit 9-15 summarizes the cost-relative-to-sales impacts of the alternative practices for the nine typical cement plants studied in this Report. For this purpose, the cost per ton of cement estimates (from Exhibit 9-13, above) have been compared to a nominal cement price of $55 per metric ton, an approximate national average for recent years. As has been done previously, results are presented both for the entire set of case study plants and, separately, for the five hazardous waste fuel-burning plants. The alternative practices are ranked from highest cost to lowest cost (or net revenue, in the case of high-value dust recovery).

The results presented in Exhibit 9-15 indicate a very wide variation in cost per dollar of sales, both among plants for particular management practices and across the different alternative practices. For Subtitle C land disposal, as an example, the difference between the low cost and the high cost plant ranges from less than one cent to over 50 cents per dollar of sales. As noted in earlier sections of this chapter, this extreme difference across plants is a reflection of the wide variations in waste dust generation rates and other observed plant-specific variables affecting total costs of waste management. Hazardous waste burners would generally face higher management costs for any of the land disposal practices because of their higher waste generation rates. Wide variation in relative costs implies great differences in competitive disadvantage, should plants competing for the same regional market become subject to one of these alternative practices.

The high absolute cost impact of the Subtitle C and C-Minus land management practices is due to the combined effects of a high waste-to-product ratio (about 0.06 tons of net CKD per ton of cement for the median kiln), the high incremental cost of Subtitle C practices and the relatively low value of product (at about $55 per metric ton). Both median and high end cost-to-sales ratios for Subtitle C and C-Minus land management are extremely high by any industry pollution control standard, and generally exceed traditional industry profit rates by a wide margin or multiple.

In contrast, the low cost alternative practices - both the tailored contaminant release control land management and the various dust recovery technologies - suggest relatively affordable approaches at the individual plant level, ranging from less than 1/2 cent per dollar of sales (or possible net profit in some instances) up to a few cents per sales dollar, depending on the particular alternative practice scenario.

9.3.2 Nationwide Cement Industry Impacts

As a first step in projecting nationwide impacts of alternative management practices for waste dust, Exhibit 9-16 presents a hypothetical extrapolation of average plant-level costs for each of the individual alternatives to the maximum relevant universe of affected cement plants. For example, if Subtitle C land management standards were to be employed in the future in place of current land management practices for waste dust, about 85 U.S. cement plants would be affected, given EPA's estimate that about 25 percent of today's kilns recycle all or virtually all of their collected dust. If all 85 plants were to manage all their current net CKD under these Subtitle C standard practices, the required new capital investment cost would amount to about $2.4 billion, and total annualized future dust management costs for the industry as a whole would increase by more than $500 million per year.

By contrast, with respect to the Tailored Contaminant Release Control land management scenario, the Agency estimates that perhaps 15 to 20 percent of the 85 facilities currently land

Exhibit 9-15

Incremental Costs of Alternative CKD Management Practices Relative to Value of Cement Sales
(Incremental cost per ton of cement/revenue per ton of cement — cents per dollar of sales)

CKD Management Alternative	All Facilities in Sample (9 Plants)				Hazardous Waste Burners in Sample (5 Plants)			
	Minimum	Median	Maximum	Weighted Average	Minimum	Median	Maximum	Weighted Average
Stop Burning Hazardous Waste	0	1.1	64.2	15.8	1.1	21.5	64.2	28.5
Subtitle C Landfill	0.7	16.9	50.7	24.1	6.7	21.1	50.7	24.7
Subtitle C- Landfill	0.7	5.6	22.7	14.5	3.8	13.6	22.7	15.7
Recovery Low Value C	-0.1	2.8	5.8	2.5	1.9	2.8	5.8	2.9
Tailored Contaminant Release Controls/No Sale of Dust	0.2	0.4	0.6	0.4	0.2	0.5	0.6	0.4
Tailored Contaminant Release Controls/Sale of Dust	0.2	0.3	0.6	0.4	0.2	0.5	0.6	0.4
Recovery High Value	-6.4	-1.9	0.8	-1.9	-6.4	-3.4	1.2	-2.8

Exhibit 9-16

Industry Wide Costs of Alternative Management Practices
(Cost in $ Million)

	Industry Wide			35 Hazardous Waste Burners	
	No. of Affected Plants	Total Capital Cost	Total Annual Cost	Total Capital Cost	Total Annual Cost
Subtitle C Standard Landfill	85[a]	1,919	416	1,070	224
Subtitle C-Minus Landfill	85	970	243	610	143
Cease Haz. Waste Burning	35	0	280	0	280
Tailored Contaminant Release Controls - No Sale	70[b]	39	9	23	5
Tailored Contaminant Release Controls - Sale	70	38	9	22	5
Dust Recovery - Low Value	85	912	64	238	35
Dust Recovery - High Value	85	434	-49	369	-34

[a] - Assuming 30 plants with zero or negligible net waste.

[b] - Assuming 15-20% of the 85 plants with net waste are already essentially in compliance.

disposing waste dust may already be employing these or equivalent practices.[34] Hence, under this scenario, only about 70 of the 115 plants, or 60 percent of the industry nationwide might initially incur costs for this particular set of alternative practices. Similarly, aggregate costs or other impacts affecting hazardous waste burning cement plants, viewed as a subset, would relate only to the 35 or so plants expected to be in that category.

It is clear from Exhibit 9-16 that total national costs for the alternative practices, considered independently from one another, vary substantially across the wide variety of management methods evaluated. Within the subset of land management practices alone (including Subtitle C Standards, C-Minus, and Tailored Contaminant Release Control), new capital investment requirements could range from $2 billion down to $38 million, and annualized costs for the industry could range from $416 to $9 million. Under the two most favorable dust recovery technology options, in the two cases considered, capital investment costs for the 85 affected plants would also be quite substantial (on the order of $500 million to over $1 billion for 85 cement plants). But if these emerging technologies should prove universally adaptable and cost-effective, within the range tentatively estimated by the Agency, then total industry-wide costs

[34] This is a very rough estimate based on land management practices reported in the PCA Survey for 1990. See Chapter 4, Section 4.3, for summary information on practices.

could be in a quite moderate range between plus or minus 6 percent of sales and with a median close to break-even.

The potential impacts on the industry and its markets could also be expected to vary to an extreme degree across the several technical dust management alternatives. For example, the high-cost Subtitle C practices, with both high initial capital requirements and costs per ton of cement ranging over 30 percent of the value of product, would place an extreme competitive strain on a large segment of the industry. Here, one would expect, with 25 to 30 percent of the domestic industry as well as potential foreign competition unaffected, that an initial impact would entail a substantial decrease in the number of financially viable domestic cement plants. Since the major portion of surviving plants would be operating under substantially higher long run total costs, economic theory would also project a substantial increase in regional and national average prices of cement necessary to cover the increased costs of waste management. The natural market corollaries of this impact scenario also suggest a decrease in overall domestic demand for cement in relation to other substitute building and construction materials, and a larger relative and absolute market share for imported cements.[35]

The Tailored Contaminant Release Control scenario for continued land management of waste dust represents an alternative with much less potential for adverse industry impacts. Indeed, with median incremental costs at only about one-half of one percent of sales and a high end cost at one percent, there would appear to be little concern regarding industry-wide impacts.

For the industry subgroup of hazardous waste fuel burners, the alternative practice option of ceasing to burn hazardous waste-derived fuels would also, as noted previously, imply rather extreme competitive disruption. With average and median plant-level financial impacts over 20 percent of the average value of cement, many and perhaps most of these plants would not consider this a financially viable alternative under current or future market conditions.

The emerging recovery technologies represent the most interesting as well as the most uncertain set of CKD management alternatives from a potential impacts standpoint.

9.3.3 Conclusions and Relationships to Regulatory Requirements

The preceding discussion has focused primarily on costs and implications of individual CKD management practices as technological alternatives, viewed independently in isolation from one another, and in the absence of any particular regulatory context. In reality, cement companies are not and would not in the future be restricted to just one industry-wide alternative. As demonstrated in this and preceding chapters, plants generally have a choice of several existing and emerging dust control and management options. Subject to existing regulatory constraints, managers can be expected to chose the alternative or combination of alternatives that tend to contribute most to company profitability, by minimizing disposal costs and/or by exploiting CKD by-product use potentials.

In the absence of further state or federal CKD regulation, the principal competitive choices foreseeable in the baseline would appear to include: (1) traditional land disposal; (2) a continued substantial role for various off-site by-product uses (the most profitable option for

---

[35] As recently as 1988, about one-fifth of U.S. cement demand was supplied by imports. This has decreased to about 10 percent in 1991, and is expected to decrease further to seven percent by 1992. U.S. Bureau of Mines, Mineral Commodity Summaries, 1993, p. 42.

many plants); (3) further development of the emergent dust recovery technologies; and (4) possible in-plant dust generation reduction and recycling via process adjustments, improved system controls, and raw material or fuel substitutions.

Given the wide variety and the plant-specific nature of the options, it is virtually impossible to predict future baseline CKD management trends with any degree of accuracy. High technology land management practices, of the type required for hazardous waste land placement under Subtitle C of RCRA, would not be considered an economically competitive (or perhaps even an economically feasible) CKD management option by private management in the baseline regulatory context. Most plants might continue to view currently uncontrolled land placement as the optimal practice from the plant's profit-and-loss standpoint. Nonetheless, evidence presented in Chapter 8 and earlier in this chapter suggest that a substantial segment of the industry is looking towards CKD reduction, recovery, and off-site use options as economically superior. EPA's cost analysis suggests that one or more of the currently available or emerging recovery technologies could in fact be economically attractive, under a reasonable set of assumptions, particularly for plants with high CKD generation. To the extent that these approaches do prove successful from a private profit-and-loss standpoint, the industry's future baseline trend would be towards increased natural resource conservation and decreased land disposal.

New state or federal regulations directed at controlling traditionally unrestricted on-site land placement could assume many forms and degrees of restriction. Several levels of such controls were simulated by the Agency's engineering cost studies, including two variations of incremental contaminant release controls and two increasingly more severe versions of RCRA Subtitle C technology standards. Essentially, these regulatory approaches would remove low cost land practice options and shift cement plant decisions toward a choice between the (increasingly) higher cost land disposal options and the other CKD reduction and recovery options.

Two main conclusions were drawn regarding the relative costs of these shifting choices. The first is that incremental land management practices, of the type simulated in the tailored contaminant release control scenarios, could be implemented at relatively modest additional cost at most of the 70 or so cement plants not now already in compliance. Although CKD management costs would about double, on average, relative to baseline, the absolute cost increment relative to the market value of cement would average about one-half of one percent of sales. The maximum added cost-to-sales estimate for the EPA case study sample was about one percent.

This cost increment could probably be absorbed without severe industry impact or a substantial number of plant dislocations. There would be some fractional percentage increases in regional cement prices to cover the added dust management costs, but this would not appear sufficient to materially influence international trade flows. At the same time, the alternative non-disposal CKD reduction and recovery options would become incrementally less costly (or more profitable) relative to land disposal. As a result, one would also expect at least a modest shift away from land disposal towards the other options.

The second major conclusion from the cost analysis is that the incremental land disposal costs implied by the RCRA Subtitle C minimum technology and administrative standards would indeed be much higher in both relative and absolute terms than either current typical land practices or the incremental contaminant release scenario described above. The Subtitle C regulatory scenarios projected incremental cost-to-sales ratios for the median affected facility of

5.5 and 17 percent, respectively, for the C-Minus and full Subtitle C versions. (For hazardous waste burners, median and average costs would be even higher than for the industry as a whole due to generally higher net waste generation rates.) High end ratios for the EPA case study sample were estimated at 21 percent and 52 percent.

For the Subtitle C scenarios, any impact assessment becomes inherently uncertain. Under the industry-wide waste listing version, a substantial majority of the Nation's cement plants (about 85 currently managing new CKD in land-based units out of 115 U.S. plants) would be faced with a rather extreme set of dust management options. (Under an alternative regulatory option, where removing the Bevill regulatory exemption would affect only hazardous waste burners, about 35 of the 115 operating cement plants would face the same choice among extreme options.) On the one hand, affected plants would face a very high cost but well known and relatively simple-to-implement land disposal technology. The alternative waste reduction, recycle, and recovery options, though potentially much lower in cost, are likely to be much more technically complex to adopt and operate, and much more uncertain in outcome. Some may not work as promised; some may not be as cost effective as the original prototypes or EPA's preliminary cost estimates might suggest.

The possible outcomes of this potential decision process, viewed in the context of a generally new and developing set of dust reduction and recovery technologies, cover a broad spectrum. Although the Agency's studies of alternative practices and preliminary engineering cost estimates suggest that currently or soon to be available innovative technologies could well play a critical future role in the industry, at this early stage in their development there can be no real guarantees. Under a Subtitle C regulatory scenario, the economic risk is that a significant portion of the industry might be unable to develop or adapt to what would amount to a technological revolution in cement kiln dust generation and management practices. Under this circumstance, a substantial portion of the industry could be forced out of business due to the high costs of land disposal, as described above. On the other side of the equation are the substantial economic benefits, the savings in energy and other natural resources, and the improvements in environmental quality that could potentially accrue from the new recovery technologies, should they prove successful.

CHAPTER NINE

COST AND ECONOMIC IMPACTS OF ALTERNATIVES TO CURRENT CKD DISPOSAL PRACTICES

9.0 INTRODUCTION 9-1

9.1 APPROACH AND METHODS 9-1

9.1.1 Data Sources 2

9.1.2 Approach to Estimating Costs and Impacts of CKD Management Alternatives 2

Case Study Plants 2

Methods for Estimating Facility Costs 3

Methods for Extrapolating from the Case Study Sample to the Industry 4

9.1.3 Cost Accounting Assumptions 5

9.1.4 Limitations of the Analysis 5

9.2 DESCRIPTIONS AND COSTS OF BASELINE AND ALTERNATIVE CKD MANAGEMENT METHODS 6

9.2.1 Current Practices 7

Direct Recycling of Collected Dust 8

Off-Site Beneficial Use 9

Current Land Disposal Practices 9

9.2.2 Alternative Land Disposal Practices 10

Conventional Subtitle C Technology and Administrative Standards 10

Subtitle C Costs (Exclusive of Corrective Action Costs) 11

Potential Subtitle C Corrective Action Costs 11

Alternative Subtitle C Costs Under RCRA §3004(x) 14

Tailored Contaminant Release Controls 15

9.2.3 Alternative On-Site CKD Recycling and Recovery Techniques 19

Increasing Direct CKD Recycling 19

Innovative CKD Recovery Technologies 20

Alkali Leaching 22

Fluid Bed Dust Recovery 26

The Passamaquoddy Technology Flue Gas Desulfurization Process . . 28

9.2.4 Other Operating Practices 31

Revised Standards for Cement Products 31

Curtailing Use of Hazardous Waste Fuels 32

9.2.5 Summary of the Costs of Alternative CKD Management Methods 34

9.3 POTENTIAL IMPACTS OF ALTERNATIVE MANAGEMENT PRACTICES 37

9.3.1 Individual Plant-Level Impacts 37

9.3.2 Nationwide Cement Industry Impacts 40

9.3.3 Conclusions and Relationships to Regulatory Requirements 43

LIST OF EXHIBITS

Exhibit 9-1	Facilities Included in the Cost Analysis	3
Exhibit 9-2	Subtitle C Disposal Costs	12
Exhibit 9-3	Subtitle C-Minus Disposal Costs	15
Exhibit 9-4	Tailored Contaminant Release Controls Costs: Continued Sales of CKD for Off-Site Use	17
Exhibit 9-5	Tailored Contaminant Release Controls Costs: Curtailed Sales of CKD for Off-Site Use	18
Exhibit 9-6	Key Design Conditions for the Nine Case Study Cement Plants	23
Exhibit 9-7	Estimated Incremental Net Costs for the Alkali Leaching System	25
Exhibit 9-8	Estimated Incremental Net Costs for the Fuller Fluidized Bed System	27
Exhibit 9-9	Estimated Incremental Net Costs for the Passamaquoddy Technology Recovery Scrubbing Process	30
Exhibit 9-10	Economic Benefits from Burning Hazardous Waste Fuels	33
Exhibit 9-11	Total Incremental Annualized Costs of CKD Management Alternatives for EPA Case Study Cement Plants	35
Exhibit 9-12	Annualized Incremental Costs of CKD Management Alternatives per Metric Ton of CKD for EPA Case Study Cement Plants	36
Exhibit 9-13	Annualized Incremental Costs of CKD Management Alternatives per Metric Ton of Cement for EPA Case Study Cement Plants	38
Exhibit 9-14	Capital Investment Requirements for Implementing CKD Management Alternatives for EPA Case Study Cement Plants	39
Exhibit 9-15	Incremental Costs of Alternative CKD Management Practices Relative to Value of Cement Sales (Incremental cost per ton of cement/revenue per ton of cement — cents per dollar of sales)	41
Exhibit 9-16	Industry Wide Costs of Alternative Management Practices (Cost in $ Million)	42

CHAPTER TEN

STUDY FINDINGS AND REGULATORY OPTIONS

10.1 Study Findings 10-1

10.1.1 Sources and Volumes of Waste (Study Factor 1) 10-1

10.1.2 Waste Management Practices (Study Factors 2 and 8) 10-2

10.1.3 Waste Characteristics and Potential Risks to Human Health and the Environment (Study Factor 3) 10-2

10.1.4 Documented Evidence of Damage (Study Factor 4) 10-4

10.1.5 Potential Costs and Impacts of Subtitle C Regulation (Study Factors 5, 6, and 7) 10-4

10.2 Environmental Justice 10-5

10.3 Recommendations 10-5

10.3.1 Decision Rationale and Options 10-5

10.3.2 Regulatory Options 10-7

10.3.3 Next Steps 10-11

CHAPTER TEN

STUDY FINDINGS AND REGULATORY OPTIONS

10.1 Study Findings

Based on the information collected for this Report to Congress, this chapter presents a summary of the Agency's findings regarding various aspects of the generation and management of cement kiln dust (CKD) waste, as well as our initial regulatory options for this waste. Results of EPA's analysis of the eight Congressionally-mandated study factors (see Chapter 1) are presented as follows: sources and volumes of waste (Study Factor 1) in Section 10.1.1; current and potential uses of CKD (Study Factor 8), and present disposal practices (Study Factor 2) in Section 10.1.2; potential danger to human health and the environment (Study Factor 3) in Sections 10.1.3; documented cases of damage to human health and the environment (Study Factor 4) in Section 10.1.4; and costs and impacts of alternative CKD management scenarios (Study Factors 5, 6, and 7) in Section 10.1.5.

10.1.1 Sources and Volumes of Waste (Study Factor 1)

In 1990, the cement manufacturing industry in the United States consisted of 43 companies operating 115 clinker-producing plants (218 kilns) in 37 states and Puerto Rico. California was the largest clinker producing state in 1990, followed by Texas, Pennsylvania, Missouri, and Michigan. Although all cement is manufactured in inclined rotary kilns using similar raw materials (primarily limestone, clay, and sand), variations in the manufacturing process and kiln design affect energy requirements and production capacity at each facility. The cement industry burns large amounts of high Btu fuels during the manufacturing process, primarily coal and other fossil fuels. In 1990, however, 23 facilities also burned hazardous waste as fuels.

Based on an analysis of existing data, including industry data collected by the Portland Cement Association and EPA survey data collected under RCRA §3007 authority from the operators of cement manufacturing facilities, the Agency has documented that cement plants generate large quantities of cement kiln dust waste. In 1990, the generation of gross CKD (i.e., CKD that is collected by air-pollution control devices) was 12.7 million metric tons; there are, however, wide variations among kilns in total gross CKD generated and gross CKD generated per ton of clinker.

In addition, there are wide variations among kilns in the amount of net CKD that is generated (i.e., CKD that is either disposed or used beneficially off-site). For example, twenty-five percent of facilities produce essentially no net CKD (CKD that is either disposed or sold), while 10 percent of the largest net generators produce almost 50 percent of all net CKD.

Finally, the Agency also found that the burning of hazardous waste appears to affect the volume of dust that is actually disposed of. Kilns that burn hazardous waste remove from the kiln system an average of 75 to 104 percent more dust per ton of clinker than kilns that do not burn hazardous waste. The Agency is interested in receiving additional information regarding how the burning of RCRA hazardous wastes, non-hazardous wastes (such as tires and non-

hazardous used oils), and fossil fuels affect the quantity and chemistry of generated CKD, as well as the partitioning of toxic metals, chlorides, and alkalis between stack gases, CKD, and clinker.

10.1.2 Waste Management Practices (Study Factors 2 and 8)

For that portion of CKD that is disposed of, industry practice is to manage it in piles, quarries, and landfills, most of which are unlined and uncovered. (Most of the gross CKD -- 8.2 million metric tons or 64% -- is currently recycled directly back into the kiln or raw feed system.) Some active piles are also managed underwater or adjacent to surface water and/or actively tilled agricultural lands. Although most CKD waste is disposed on-site, some is sold for off-site use. For example, in 1990, 7% of gross CKD generated (897,000 metric tons) was sold for off-site use, most of it as a waste stabilizer, liming agent, or materials additive.

Opportunities do exist, however, to further reduce the amount of net CKD that is disposed of or sold off-site for use by recycling it back into the kiln. The Agency has identified a number of pollution prevention opportunities, including flue gas desulfurization, fluid-bed dust recovery, and leaching with water, that may, in some instances, represent low cost and potentially profitable alternatives to CKD disposal practices.

Federal statutes that potentially affect CKD management include the Clean Air Act (CAA), Clean Water Act (CWA), the Resource Conservation and Recovery Act (RCRA), and the Comprehensive Environmental Response, Compensation and Liability Act (CERCLA). Provisions of regulations developed under authority of the CAA and CWA impose regulatory controls on releases of CKD to the air (via stack or fugitive dust emissions) and water (from stormwater run-off and point source effluent discharges), respectively. Under both RCRA and CERCLA, the federal government can respond to situations where the release of CKD or its constituents presents an imminent and substantial danger to human health and the environment. CKD that is not directly recycled is also subject to regulation under Subtitle D of RCRA. In addition, CKD generated in kilns that burn RCRA hazardous waste is subject to the RCRA Boiler and Industrial Furnace rule (40 CFR 266.112).

Based on an analysis of state regulations, the Agency has found that cement kiln dust waste is regulated under state and local laws, but the requirements vary significantly from state to state. For example, California regulates CKD as a non-RCRA hazardous waste, but has suspended enforcement of the management requirements for CKD that fails the State's hazardous waste corrosivity test, pending the results of further study of CKD. Pennsylvania regulates CKD as a residual waste, requiring facilities to comply with site-specific disposal requirements and waste reduction strategies, which are both periodically updated by the State. In contrast, Michigan and Texas both consider CKD an industrial non-hazardous waste. Michigan requires permits, ground-water monitoring, and regular reports of ground-water sampling results; whereas Texas issues non-enforceable guidance.

10.1.3 Waste Characteristics and Potential Risks to Human Health and the Environment (Study Factor 3)

EPA's analysis of cement kiln dust chemistry shows that CKD does contain toxic constituents, including metals and organic by-products. Constituents identified in dust solids and leachate include arsenic, thallium, antimony, lead, chromium, total-2,3,7,8-substituted dioxins,

and total hexachloro-dibenzodioxin. In addition, water-CKD mixtures are often RCRA corrosive (see 40 CFR 261.22), with pH levels commonly in excess of 12.5 standard units.

In addition, on the basis of our analysis of leachate test results, EPA has found that no significant distinction can be made between CKD generated from kilns that burn hazardous waste from those that do not burn hazardous waste. (This finding was corroborated for metals content in CKD by leachate test results submitted to the Agency by the cement industry.) For example, laboratory analysis of CKD using the Toxicity Characteristic Leaching Procedure (TCLP) shows that trace metal concentrations rarely exceed RCRA toxicity limits whether or not the CKD is generated at kilns that burn hazardous waste. At the same time, certain metals, such as lead, cadmium, and chromium are present in the CKD at a consistently higher mean concentration from those kilns that burn RCRA hazardous waste than those that do not (alternatively, thallium is higher in CKD generated from kilns that burn predominantly non-hazardous fuels).

While it is not possible to establish statistically significant differences between these groups due to small sample sizes, detectable, but low, concentrations of dioxins and dibenzofurans were detected in CKD, (ranging in concentration from a few parts per trillion to 7.7 parts per billion), at both hazardous waste burning facilities and non-hazardous waste burning facilities. However, the highest concentrations that were measured in CKD came from kilns that burn hazardous waste. [Note: The levels of dioxins in dust observed at the River Cement facility in Festus, Missouri, a facility that burns hazardous waste, are at least 15 times higher than those found at any other facility for which EPA has data. We believe that River Cement is likely atypical of the industry as a whole.] Volatile and semivolatile compounds were generally not found in CKD.

With respect to exposure scenarios associated with on-site CKD management, EPA modeled both direct and indirect exposure pathways, including contaminated surface water and ground water used as a drinking water source, direct inhalation and ingestion of windblown CKD, and the ingestion of foodstuffs (beef, milk, fish, and\or vegetables) originating from agricultural fields or streams that are receiving releases of CKD from nearby piles. The sample of cement plants examined in this analysis appears to be generally representative of typical cement plants in terms of several factors that influence risk. Based on this analysis, cancer risks for individuals living around cement plants under average conditions of transport and exposure (defined as central tendency estimates) were low (below 1×10^{-4}). In addition, noncancer effects were below the threshold effects level, indicating a negligible likelihood of noncancer impact. This analysis also quantified the high end of the distribution of risks around these same cement plants. While the risks were somewhat higher, they are generally considered within an acceptable risk range.

The Agency recognizes that the high end results obtained above may not necessarily capture the upper bound of the risks that exist across the whole universe of cement plants, as site-specific factors at some plants may contribute to higher risks. Therefore, in addition to a central tendency analysis, the Agency also conducted a sensitivity analysis of several hypothetical scenarios representing a combination of potentially higher risk transport and exposure situations. This analysis estimated that the potential cancer risks for individuals living around cement plants assuming plausible worst-case conditions (i.e., modeled utilizing the highest measured concentrations of dioxins and arsenic found in CKD and leachate derived from CKD) were in the risk range of 10^{-5} to 10^{-2} (for purposes of this analysis, these individuals are hypothetical

individuals highly exposed to CKD intake who were created for purposes of the Agency's risk characterization). The hypothetical scenarios are: (1) subsistence fish consumers ingesting fish caught in nearby waters; or (2) subsistence farmers ingesting elevated amounts of vegetables grown in, or beef and milk derived from animals who ingested grasses originating from agricultural fields receiving releases from nearby CKD piles through air deposition.

The Agency does not have sufficient information to determine whether these plausible worst-case conditions of high transport and high exposure potential exist around cement manufacturing facilities, and if yes, their prevalence. Therefore, the Agency is interested in receiving additional information regarding the extent to which activities such as farming (including recreational gardening), fishing, and swimming occur around these facilities.

10.1.4 Documented Evidence of Damage (Study Factor 4)

Migration of potentially hazardous constituents, including metals, has occurred from cement kiln dust waste sites. EPA has documented seven cases of damage to surface water and ground water, and 21 cases of documented damage to air from cement kiln dust waste. By damage, the Agency means that toxic constituents have contaminated ground water and/or surface water, and/or air above Maximum Concentration Limits or some other standard. Constituents of concern being released to ground and surface waters include arsenic, chromium, and lead, among others. When ground-water and surface water exceedances do occur, the magnitude of the exceedance is generally small, although in certain instances it was as high as two orders of magnitude above the Maximum Concentration Limit for drinking water.

Environmental damage generally affects the area in the immediate vicinity of the waste disposal site. However, in some cases, nearby wetlands and streams that are off-site were also impacted. For example, releases from two facilities in Mason City, Iowa caused severe degradation of the aquatic habitat in nearby Calmus Creek. Observed releases are commonly chronic at sites at which exceedances have been noted.

It should be noted that information on environmental quality, on which this evidence is based, is limited by available data from each of the 127 sites evaluated. For those sites that had data, available files contained information on releases, but little human exposure data. Because there is little evidence of direct human exposure to environmental releases from CKD, it appears that the observed damages are not widespread.

Waste disposal practices at sites where water damages have been documented include management in waste piles, abandoned quarries, or landfills, all of which were unlined. Air damages are primarily due to mechanical failure of dust handling equipment. There is no evidence that any damage has directly affected human health. In particular, drinking water wells are located far enough away, and/or tap aquifers are isolated enough to be very unlikely to access contaminated ground water.

10.1.5 Potential Costs and Impacts of Subtitle C Regulation (Study Factors 5, 6, and 7)

If CKD were required to be managed as a RCRA hazardous waste under the existing regulatory scheme, there would likely be significant compliance costs for these facilities. These costs may potentially be reduced if they could recycle their dust. For these facilities costs would

be upwards of 20 percent or more of product sales. In addition, domestic and international competition limits the ability for those facilities to pass costs through to customers.

The costs of managing CKD as a hazardous waste could be reduced, if RCRA Section 3004(x) authority is used to modify certain Subtitle C requirements (e.g., prohibitions on land disposal, minimum technological requirements for managing CKD). Costs would also be imposed under the Option 5 management standards, although those costs are likely to be much less than under Options 3 and 4. Removing the exemption, but not specifically listing CKD would have less cost impact, as most CKD is not RCRA characteristic hazardous waste. While those cement kilns that burn listed RCRA hazardous waste would be required to handle their CKD as hazardous, they will likely be able to at least partly absorb the costs of Subtitle C compliance with revenue from accepting and burning these wastes. In addition, these facilities are already subject to a number of the more costly RCRA requirements (e.g., requirement to obtain a permit, corrective action).

Pollution prevention opportunities, including, flue gas desulfurization, fluid-bed dust recovery, and alkali leaching show promise as low cost, and potentially profitable alternatives to disposal in piles. Flue gas desulfurization creates new lime for use as raw material, scrubs stack gases of sulfur, and creates pelletized alkali sulfates that may be sold as fertilizer. The alkali leaching process dissolves alkalis from CKD, enabling more CKD to be returned to the kiln. The process creates an alkali solution that may be sold as a fertilizer. The fluid-bed dust recovery process takes CKD and converts it directly into clinker. All three technologies can be used to process old CKD piles. The Agency is interested in receiving additional information regarding how these processes affect the quantity and chemistry of air emissions, as well as the partitioning of toxic metals, chlorides, and alkalis between CKD and clinker.

10.2 Environmental Justice

In addition to the eight study factors specifically identified in the statute, the Agency is interested in determining whether there are environmental justice issues associated with the management of CKD. The Agency's risk modeling results indicate that subsistence farmers and subsistence fish consumers would be most susceptible to the risks posed by the management of cement kiln dust.[1] It is not known, however, how prevalent these activities are around existing cement manufacturing facilities. Although the Agency acknowledges that its concern is speculative, the prospect that subsistence farmers and subsistence fish consumers may be of low income or minority status suggests that there might also be environmental justice issues associated with cement manufacturing facilities. The Agency is interested in receiving additional information regarding the extent to which activities such as farming (including the recreational gardening of vegetables) and fishing occur around these facilities, and in particular, whether subsistence farming and subsistence fishing exists. The Agency is also interested in learning of concerns related to environmental justice (i.e., the fair treatment of people of all cultures, incomes, and educational levels with respect to protection from environmental hazards) associated with the management of cement kiln dust.

10.3 Recommendations

[1] For purposes of this report, subsistence farmers and subsistence fish consumers are hypothetical individuals highly exposed to CKD intake who were created for purposes of the Agency's risk characterization.

10.3.1 Decision Rationale and Options

Based upon the analysis of the eight study factors in RCRA §8002(o), EPA has reached some preliminary findings. Utilizing the three step procedure described in Chapter 1 of this volume (Section 1.2), EPA has arrived at tentative answers to the questions posed in its decision rationale, which are described below. The decision rationale contributed to development of the five proposed options for managing CKD waste (listed in Section 10.3.2), although the Agency has not yet made a final decision. EPA is soliciting comment on how the decision rationale can be used in the Agency's decision-making process.

Step 1: Does management of CKD pose human health and environmental problems? Might current practices cause problems in the future?

After reviewing evidence of damage to human health and the environment, performing a risk assessment, and reviewing the results of laboratory analyses of waste samples, EPA has concluded that risks associated with CKD management are generally low. There is, however, a potential under certain circumstances for CKD to pose a danger to human health and environment, and it may do so in the future.

Data collected from state files and EPA site visits identify common CKD waste management practices, including management in exposed, unlined piles, abandoned quarries, and landfills, that have caused, and may continue to cause, contamination of air and nearby surface water and ground water. Management practices such as disposal in a water-filled quarry and management in piles adjacent to grazing and agricultural fields or surface water bodies also pose a potential danger to human health and the environment. In addition, risk modeling results support the conclusion that CKD can potentially pose risks to human health and the environment under certain hypothetical, yet plausible scenarios.

Step 2: Is more stringent regulation necessary or desirable?

EPA has reached no conclusions with respect to the need for more stringent regulation. EPA's preliminary analysis of the effectiveness of state and federal regulations and controls suggests that additional controls should be evaluated; for example, controls for CKD management scenarios which potentially present high risks, if those scenarios exist. While CKD is regulated under state and local laws, the specific requirements for CKD vary from state to state. In many instances, minimal controls are applied to these wastes. Also, recycling technologies could be used as a means to improve waste management practices.

Step 3: What would be the operational and economic consequences of a decision to regulate CKD under Subtitle C?

Operational costs of CKD regulation are largely dependent on the management alternative selected. If CKD is managed as a hazardous waste under RCRA Subtitle C, facilities that manage their CKD through on-site land disposal are estimated to incur significant compliance costs. However, the financial burden of compliance, even for waste dust generated in kilns that burn RCRA hazardous waste, may be reduced or potentially turned into net income, if facilities are able to adopt pollution prevention technologies that recycle CKD.

The possible economic outcomes of a decision to regulate CKD under RCRA Subtitle C cover a broad spectrum. An economic analysis of innovative pollution prevention technologies (including alkali leaching, flue gas desulfurization, and fluid bed dust recovery), suggests that the potentially high compliance costs of CKD land disposal may drive the industry toward more recycling of their CKD. However, at this early stage of their development, it is uncertain that these recycling technologies can be widely adopted by the industry. Moreover, even if CKD is recycled, some facilities may incur substantial disposal costs.

10.3.2 Regulatory Options

This section presents a series of options the Agency is considering concerning the management of cement kiln dust waste based on the findings of this Report. In accordance with RCRA §3001(b)(3)(C), EPA will make a regulatory determination for cement kiln dust waste after submitting this Report to Congress, holding a public hearing, and accepting and reviewing public comments.

As stated previously, cement kiln dust waste generally presents a low inherent toxicity, is only rarely characteristically hazardous, and, in most cases based on risk modeling, does not present a risk to human health and the environment. However, cement kiln dust waste may pose a potential threat to human health and the environment considering plausible worst-case conditions under certain hypothetical management scenarios (see Chapters 5 and 6). Major factors increasing the potential for human health and environmental damages include proximity to potential exposure points such as agricultural fields and surface water bodies, as well as the concentrations of key constituents of concern.

Based on the findings, and an initial evaluation of regulatory options, the Agency has not decided whether to retain or remove the CKD exemption. The Agency considered a number of options which represent a wide range of scenarios that would subject CKD to different management requirements and enforcement oversight. From these, the Agency has chosen to highlight five, including three in which CKD would be managed under Subtitle C, with the intent to focus public comment from environmental groups, industry, and other interested parties regarding the most appropriate approach to manage CKD.

EPA notes that regulations for the management of CKD waste under Subtitle C may not be warranted or appropriate if other Agency-administered programs are better suited to address the concerns identified in this report. Among the statutes that may have authority to address the indirect foodchain risks associated with CKD are the Clean Water Act (stormwater management regulations), the Clean Air Act (the program defining the National Emissions Standards for Hazardous Air Pollutants), and the Toxic Substances Control Act (which gives the Agency authority to issue appropriate regulations to address the risks from hazardous chemical substances or mixtures). In particular, when fully implemented the Agency's recently implemented stormwater control regulations could substantially mitigate damages related to the surface water pathway. These alternative authorities are being explored and a decision to pursue regulation of CKD under one or more of these statutes may form the basis for a decision that Subtitle C regulation of CKD may be limited or even unwarranted.

Whether or not the Agency lifts the exemption, dust suppression and stormwater management at facilities that burn hazardous waste, as well as on-site CKD management practices at all other facilities would be subject to current and potential future regulation under

the Federal Clean Air and Clean Water Acts, and where such provisions exist, all applicable state laws and regulations. Damages at existing CKD disposal sites also could be addressed by RCRA §7003 and CERCLA §104 and §106, if the site posed an imminent and substantial danger to human health and the environment.

Option 1: Retain the CKD Exemption.

Since CKD exhibits low inherent toxicity and poses minimal risk when evaluating the various exposure pathways using average or best-case conditions, it may be appropriate to retain the exemption for cement kiln dust waste, that is, maintain the status quo. Under this option, CKD management would continue to be regulated by the states, if at all.

Option 2: Retain the CKD Exemption, but enter into discussions with the industry, in which they voluntarily implement dust recycling technologies, reduce waste, and monitor and control certain off-site uses.

Since certain management scenarios may present risks when assuming plausible worst-case conditions and pollution prevention alternatives may be promising in certain instances, the Agency could enter into discussions with the cement manufacturing industry to urge it to implement selected waste minimization/pollution prevention technologies or implement, more environmentally protective management practices, including controlling certain off-site uses.

For example, some of the potential higher risk situations that have been identified in the hypothetical scenarios relate to on-site CKD management and derive from CKD releases from waste piles or other points via wind-blown dust or stormwater run-off or a combination of the two. These contaminant release situations may be controllable (and at some facilities are currently being controlled) at relatively low cost by careful location of the waste pile and active use of conventional dust suppression and stormwater management practices. The Agency would hold discussions with the industry to encourage them to voluntarily agree to implement these practices.

An exception to the above conclusion would appear to be the 15 percent or so of cement plants where CKD waste is managed in areas of karst topography or other areas characterized by flow in fractured or cavernous bedrock, where leachate may directly percolate to ground water with little or no attenuation. For some of these facilities, the ground-water pathway may become of increased concern, depending on other site-specific considerations. Again, EPA would discuss with the industry opportunities to either use appropriate liners or relocate the CKD management unit.

About 20 percent of current net CKD generation is used off-site for a wide variety of purposes, most of which according to the Agency's risk assessment do not pose human health or other risks. However, the use of raw CKD containing higher measured levels of certain metals and/or dioxins as a direct substitute for lime on grazing fields, agricultural fields, and gardens can concentrate toxic constituents in crops and animal products at levels of concern for human health. This use of CKD, though not widely practiced at present, is otherwise not currently controlled, and may warrant further consideration by the Agency.

The Agency, under this option, could also develop guidance for states regarding site management, off-site uses, and pollution prevention and waste minimization technologies. This

guidance would assist states in reducing the potential risks posed by mismanagement of CKD and recommend implementation of technologies that would promote recycling of CKD.

Under this option, CKD management would not be controlled by the provisions of RCRA Subtitle C. However, since the exemption for CKD remains in place, CKD generated in kilns that burn hazardous waste would still be subject to the two-part test for residuals under 40 CFR 266.112. If CKD does not pass the two-part test, it would be treated to standards for land disposal (40 CFR 268.43) and disposed in a Subtitle C facility. Damages at existing CKD disposal sites would still be addressed by RCRA §7003 and CERCLA §104 and §106, if the site posed an imminent and substantial danger to human health and the environment.

Option 3: Remove the CKD Exemption but delay implementation for some period of time (e.g., two years), that would allow industry time to employ pollution prevention options.

While CKD may not present risks when evaluating the various exposure pathways using average or best-case conditions, CKD may pose a potential danger to human health and the environment if managed in certain ways under a limited set of exposure pathways assuming plausible worst-case conditions. Also, damages to the environment resulting from poor CKD management practices have been recorded and are continuing to occur at some facilities. For these reasons, removing the Bevill exemption (codified at 40 CFR 261.4(b)(8)) may be appropriate. Accordingly, provisions of the Boiler and Industrial Furnace rule (40 CFR 266.112) would no longer apply to hazardous waste-derived CKD.

Under this option, on-site CKD management practices at those facilities with dust that exhibited any of the RCRA hazardous waste characteristics, or CKD derived from the burning of listed hazardous wastes (see 40 CFR 261.3(c)(2)(i)) would be affected by the provisions of RCRA Subtitle C. CKD disposal piles which are inactive on or before the effective date of the Final Rule would be unaffected by the provisions of Subtitle C, unless subsequently managed.

By delaying lifting the exemption for some period of time (e.g., two years after the Regulatory Determination), industry would be provided an opportunity to implement pollution prevention alternatives and thus, manage the hazardous waste management costs they would incur. During this interim period between submittal of the Report to Congress and the effective date of the Final Rule, the CKD exemption would still be in effect. The Agency believes that many of the affected facilities would utilize the time to adopt pollution prevention technologies which would reduce, if not eliminate the amount of hazardous CKD they generate, or stop burning hazardous waste.

Once the exemption is removed, CKD generated from cement manufacturing facilities that burn RCRA hazardous wastes would be RCRA hazardous waste under the derived-from rule (40 CFR 261.3(c)(2)(i)). The goal of avoiding Subtitle C compliance costs would provide an incentive for each facility to look for pollution prevention alternatives to recycle their CKD and reduce the amount of hazardous waste generated. The Agency is requesting additional information on the viability of the CKD recycling options discussed in the RTC and any other available pollution prevention or recycling option not considered in the Report.

Those facilities that do not burn hazardous waste would not generally be affected by removing the exemption unless they generated characteristic RCRA hazardous waste. The

Agency expects the number of non-hazardous waste burning facilities affected by this option would be small, since CKD rarely exhibits a characteristic of hazardous waste. These facilities would have an incentive to control their cement manufacturing process to avoid generating characteristic CKD.

Option 4: Remove the CKD Exemption, and rely on existing hazardous waste rules to control cement kiln dust.

This option is similar to Option 3, except the exemption would be removed in accordance with RCRA §3010(b). (Under Subtitle C of RCRA, wastes brought under regulatory control have up to six months from the Regulatory Determination before they become subject to hazardous waste control.) Thus, CKD that is hazardous waste-derived or exhibits a RCRA hazardous characteristic would be made subject to the provisions of RCRA Subtitle C. Otherwise, this option is the same as Option 3.

Option 5: Promulgate Regulatory Standards for the Management of CKD Waste.

As previously stated, the Agency's analysis of the risks associated with cement kiln dust suggest that by merely lifting the exemption at 40 CFR 264.1(b)(8), certain pathways of potential concern under the hypothetical scenarios may not be adequately addressed under Options 3 and 4, should EPA decide that Subtitle C regulation is warranted for CKD in the first instance. Specifically, EPA's risk assessment indicates indirect foodchain risks are of potential concern from releases of CKD from disposal piles to nearby surface waters and crop lands and from the direct application of CKD to croplands as a soil amendment assuming reasonable worst-case conditions. The Agency acknowledges, as discussed in detail in Chapter 6, that these modelled risks, while plausible, are of probably minimal incidence.

As described above, the likely regulatory result under Options 3 and 4 would be to make CKD generated by a kiln that burns listed hazardous wastes itself a hazardous waste under the derived-from rule (40 CFR 261.3(c)(2)(i)). The indirect foodchain risks potentially identified in this Report, however, are not associated only with CKD generated by hazardous waste burning kilns. As a result, EPA is also considering regulatory mechanisms that would specifically address these risks, including promulgating regulatory standards under Subtitle C for the management of CKD waste that would provide adequate protection against these risks.

RCRA §3001(b)(3)(C) provides that EPA shall within six months of the RTC "determine to promulgate regulations under this subchapter ... or determine that such regulations are unwarranted." The statute does not describe the type of regulation that EPA should consider promulgating (if any), other than that such regulation be under Subtitle C of RCRA. For example, RCRA does not expressly direct EPA to determine whether to list CKD as hazardous, as required for other wastes under the mandates in RCRA §3001(c). Furthermore, RCRA §2002(a) gives the Administrator the broad authority to "prescribe ... such regulations as are necessary to carry out his functions under this chapter." The Agency believes it has the authority where appropriate to promulgate federally-enforceable regulatory standards under Subtitle C for the management of CKD. EPA could explore mechanisms for imposing regulatory standards for CKD, e.g., under grant of rulemaking authority under 3001(b)(3)(C). Alternatively, EPA could

consider conditioning the CKD exemption from the definition of hazardous waste (40 CFR 261.4(b)(8)) on compliance with appropriate management standards.

EPA could promulgate minimally burdensome management standards for cement kiln dust that would adequately control the indirect foodchain risks, such as: (1) requiring that dust piles be kept covered to control fugitive emissions and institute surface water run-off and erosion controls; (2) maintaining ground-water protection, perhaps by requiring that CKD piles be maintained on a non-earthen base or by requiring a liner; and (3) establishing risk-based concentration thresholds for all constituents of concern (including 2,3,7,8-TCDD, arsenic, cadmium, and lead) for CKD used as a direct soil amendment. Additional or alternative standards may be appropriate, and EPA welcomes comments and suggestions on this aspect of its options.

Of the five options being considered by the Agency, Options 3, 4, and 5 would provide more control through implementation of the provisions of Subtitle C. The principal difference between Options 3 and 4 is the timing of the implementation of the regulatory controls. Option 3 provides industry additional time to implement waste minimization/pollution prevention options and more protective CKD management standards. Option 4 would bring CKD under Subtitle C regulatory control more quickly. Removing the exemption also would impose regulatory equity between CKD generated from kilns that burn RCRA hazardous waste and residues from other incinerators that burn RCRA hazardous waste that do not have such an exemption. Option 5 would provide management standards to control all CKD, and would be targeted to specifically address only those risks of potential concern.

The Agency did not evaluate the risk from the land application of agricultural lime, so it cannot determine whether there is an increase in incremental risk when CKD is substituted. In any event, CKD-sewage sludge derived fertilizers and soil amendments are considered safe for such uses as fertilizer and pose minimal risk because these final products are required to be tested to assure they comply with all provisions of 40 CFR 503, which are fully protective of human health and the environment. It should be noted that if the exemption is removed, fertilizer that is derived from CKD generated from a kiln that burns listed hazardous waste is itself a hazardous waste under the derived-from rule (40 CFR 261.3(c)(2)(i)); the extent of regulation, however, is limited (see 40 CFR 266.20(b)).

In addition, it should also be noted that under current rules, if CKD is recycled, the resulting clinker is not automatically subject to the provisions of Subtitle C. By removing the exemption, however, clinker may be affected by the derived-from rule (40 CFR 261.3(c)(2)(i)) if the kiln burns listed hazardous waste, thereby becoming a hazardous waste. The Agency has not yet fully analyzed available data on trace constituents in clinker. Based on our understanding of current data, however, the Agency does not believe that clinker produced from kilns that burn listed hazardous waste generally poses a hazard to human health and the environment. The Agency is, therefore, considering crafting appropriate regulatory language for clinker. The Agency, however, is interested in receiving comment on this issue.

10.3.3 Next Steps

After an evaluation of public comments on this RTC, the Agency will, in accordance with RCRA §3001(b)(3)(C), reach a final Regulatory Determination on the management status of CKD within six months of submission of this Report. The Regulatory Determination requires

the Agency only to determine to promulgate regulations under Subtitle C, or determine that Subtitle C is unwarranted. Thus, if RCRA §3004(x) or Option 5 is chosen, EPA would have time beyond six months to promulgate a Final Rule.

GLOSSARY

acid mine drainage - Water draining from closed or abandoned mines that is highly acidic, often due to high concentrations of acidic sulfates.

acid neutralization - Reaction of an acid with a base to lower the pH of the base, i.e., make it more neutral.

acidic soils - Soils exhibiting a pH of less than 7.

aggregate - A mixture of mineral substances (e.g., sand, gravel, crushed rock, slag, etc.) which, when cemented, forms concrete. Uncemented aggregate can be used as a component of road pavement and in manufacturing processes.

agricultural lime substitute - Any substance used as a substitute for lime to add calcium oxide to soils, usually to control pH.

air pollution control devices - Devices used to limit dust emissions from the kiln system to the atmosphere. Dust collection systems at cement plants generally involve a combination of electrostatic precipitators, fabric filters arrayed in baghouses, cyclones, gravity/inertial separators, and granular bed filters.

air districts - California air quality management districts that share the responsibility with the California Air Resources Board, and local or regional air pollution control districts, to set air pollution control standards.

alkali volatilization - A technique to recover alkali from the surface of CKD particles. This technique generally involves subjecting the CKD to a high temperature, then condensing the resulting alkali vapors from the hot gases onto a cooler surface.

alkali-aggregate reactivity - Susceptibility of aggregate to the alkali-aggregate reaction, a chemical reaction in either mortar or concrete between alkalies (sodium and potassium) from Portland Cement or other sources and certain constituents of some aggregates. The reaction may cause deleterious expansion of the concrete or mortar.

alkalies - "Impurities" in the mixture of raw material (and to some extent, fuels) used in a cement kiln, including the univalent, mostly basic metals of group I of the periodic table, and their oxides.

alkaline materials - Water-soluble materials that yield a high concentration of hydroxyl (OH^-) ions in solution, or otherwise produce a solution with a pH > 7 when dissolved.

alum - Aluminum sulfate, commonly used as a coagulant in wastewater treatment processes.

applicable and relevant or appropriate requirements (ARARs) - Standards used to establish cleanup levels at Superfund sites.

argillaceous materials - Term applied to rocks that contain silt- to clay-sized sediments, which often contain a high percentage of organic materials and a high clay mineral content.

as generated CKD - Term used to describe a sample of CKD collected after it has exited the kiln, but before it has been returned to the kiln system or placed in a CKD management unit.

as managed CKD - Term used to describe a sample of CKD collected from a CKD management unit (e.g., a waste pile).

aquifer - A subsurface formation containing water in quantities sufficient to be withdrawn. A useable aquifer is one that may be used for agricultural and industrial purposes as well as human consumption.

background concentrations - Ambient concentrations of naturally occurring or anthropogenic chemicals present in the environment not due to CKD management. These concentrations are used as baseline levels to compare with chemical concentrations measured in CKD.

baghouse filter - Large fabric bag, usually made of glass fibers, used to eliminate intermediate and large (greater than 20 microns in diameter) particles. This device operates in a way similar to the bag of an electric vacuum cleaner, passing the air and smaller particulate matter, while entrapping the larger particles. The porous structure of baghouses is generally a woven or felt fabric with a retention efficiency that improves as the interstices fill with captured dust, but with the negative effect of increased flow resistance. Thus, regular filter cleaning is required to maintain overall efficiency.

baghouse waste dust - Particles removed from the porous structure of a baghouse.

ball mill - A type of size reduction equipment used in the cement industry for the grinding of raw materials and clinker. A ball mill consists of a rotating cylinder containing steel or ceramic balls that are used to break up materials placed into the mill.

best management practices - Structures (such as storage ponds and infiltration trenches) designed to receive and contain stormwater, and/or procedures, methods, and devices, that improve or maintain the quality of environmental media.

Best Available Control Technology (BACT) - Air pollution controls that achieve the "maximum degree of [emission] reduction ... which the permitting authority, on a case-by-case basis taking into account energy, environmental, and economic impacts and other costs, determines is achievable for such facility..." To obtain a Prevention of Significant Deterioration (PSD) permit, a source must demonstrate that it will use BACT to reduce emissions for each pollutant subject to regulation under the Clean Air Act.

Bevill Amendment - Section 3001 of RCRA, which temporarily excludes CKD (and other specific waste categories) from regulation as a hazardous waste under Subtitle C of RCRA, pending study. While temporarily excluding CKD from regulation as a hazardous waste, the Bevill Amendment does not preclude CKD regulation under other provisions of federal or state law.

bioaccumulation - The net uptake of a chemical in the environment into biological tissues via all exposure pathways. It includes the accumulation that may occur by direct exposure to contaminated media (e.g., dermal absorption, ingestion) as well as exposure from food. This phenomenon can result in higher concentrations of substances in biological tissue than in surrounding environmental media.

Boiler and industrial furnace (BIF) regulations - Regulations that require owners and operators of hazardous waste-burning boilers and industrial furnaces to limit the emissions of toxic metals, carbon monoxide, hydrogen chloride, chlorine gas, and particulate matter. Cement kilns are an example of boilers and industrial furnaces.

brine - A concentrated solution of inorganic salts, formed by the partial evaporation of saline waters.

British thermal units (Btus) - A unit of measurement of heat; one Btu will raise the temperature of one pound of water one degree fahrenheit.

bulk constituents - For purposes of this report, constituents that exceed 0.05 percent by weight in CKD. Bulk constituents are primarily those found in clinker, though they also may be present at levels in CKD that are unacceptable in the cement.

burnability - The requirements in terms of time, temperature, and fuel to process the raw material used in a cement kiln.

calcareous materials - General term used for rocks containing calcium carbonate, such as limestone and dolomite, and for materials that are regarded as basic or alkaline.

calcination - Heating an ore, mineral product, or intermediate product in a furnace or kiln to decompose carbonates or intermediate compounds to CO_2 and associated oxides. In a cement kiln, this process occurs at a material temperature range between 1,480 and 2,190°F.

cancer/noncancer risks - The increased probability resulting from exposure to a hazardous substance of an individual or population experiencing cancer or adverse, noncancer effects.

carbonator - Wastewater treatment used to remove excessive calcium concentrations. Wastewater is run through carbonators in which the calcium will combine with carbon dioxide and precipitate out as $CaCO_3$.

carcinogenic - A substance that produces or incites cancer.

cement clinker - The material that is formed when heating the raw materials used in the production of cement, usually limestone and clay, to approximately 2,700°F. Clinker is granular and variable in size, and is usually cooled and ground with a smaller amount of gypsum to form cement.

cement compression strength - The resistance of cement to rupture under compression, expressed as force per unit area.

cement kiln fuel - Fuel used in the process of producing cement. The elevated combustion temperatures involved in cement production require fuels with a high heat content (e.g., fossil fuels).

cement plants - Facilities that produce commodities by burning mixtures of limestone and other minerals or additives at high temperature in a rotary kiln, followed by cooling, and finish mixing and grinding.

cement workability - The capacity of cement for being shaped.

central tendency risk estimate - The best estimate of risk. This represents the risk to which most of the population may be exposed.

CERCLA - Comprehensive Environmental Response, Compensation, and Liability Act, also known as Superfund.

chlorination roasting - Addition of chlorine compounds (e.g., sodium or calcium chloride) to the raw feed, followed by a reaction in the kiln with other raw materials to produce potassium chloride (KCl). The KCl is sublimed and collected with the CKD, raising the K_2O content.

chlorinated dibenzofurans - A class of organic compounds that are listed hazardous wastes under the following RCRA waste codes: F020, F021, F022, F023, F026, F027, F028, and F032 (see 40 CFR Part 261). These compounds are also important combustion products from the burning of hazardous waste fuels.

CKD - A fine grayish material created in the process of calcining feed to produce cement clinker. The primary byproduct of the production of cement.

CKD cohesion - Molecular attraction by which the particles of CKD are united throughout the mass.

CKD management practices - Methods used to manage gross CKD generated by a cement plant. These generally include direct recycling, treatment and return to the kiln system, landfilling/stockpiling, and/or beneficial use.

CKD shear strength - Measure of the internal force in CKD tangential to the section on which it acts.

CKD beneficial use - The use of CKD in a variety of productive applications including soil stabilization, land reclamation, waste remediation, sewage sludge stabilization, agricultural applications, lime substitution, and construction.

clarification - The removal of particulate matter, chemical floc, and precipitates from suspension in a fluid through gravity settling.

clarifier - A tank in which solids are settled to the bottom and are subsequently separated from a fluid as a sludge.

clay - Sedimentary particles with diameters less than 1/256 mm. When in a formation, clay layers are usually less permeable than other sedimentary materials such as sandstone or limestone.

clinker cooler - After leaving the kiln, the clinker is cooled in a rotary, planetary, or grate-type clinker cooler using air pulled into the unit by dedicated cooler fans, and then transferred by conveyor to the finish mill.

closure and post-closure care plan - A written plan that identifies and describes the steps that will be carried out to close, dismantle, decommission, and/or reclaim a waste management unit at a cement plant.

co-combustion residues - Residues derived from the burning of hazardous waste fuels in conjunction with fossil fuels.

coagulation processes - Processes by which a colloid is made to come out of solution by aggregation. In water treatment, CKD can be substituted for lime in coagulation processes.

congener - A term used to refer to any one member of the same chemical family. For example, there are 75 congeners of chlorinated dibenzo-p-dioxins, seven of these congeners have chlorine substituted at the 2, 3, 7, and 8 carbon atoms.

coke-petroleum coke - The solid, cellular, infusible material remaining after the carbonization of coal, pitch petroleum residues, and certain other carbonaceous materials. The coke used by cement kilns is typically petroleum coke.

combustion air - Air that is introduced into the hot end of the kiln, reacted with the kiln fuel, and drawn upward into the cool or "feed" of the kiln.

compression test - A method used to measure the amount of force that can be applied to an object of known area before failure.

concrete durability - The ability of a material (concrete) to function properly and resist destruction over a long period of time, including resistance to: failure under load, weathering, freezing and thawing, corrosion, rotting, abrasion, and changes in properties depending on the environment in which the material is being used.

confined aquifer - An aquifer that is overlain by a confining bed, which has significantly lower hydraulic conductivity than the aquifer.

constituent mobility - The tendency of a substance to move through the environment. Commonly used in this volume to refer to the mobility of a substance in ground-water systems based on the substance's soil-water partition coefficient (K_d), with lower K_ds related to more mobile substances.

constituent persistence - The tendency of a substance to remain in the environment. Generally based on a substance's half-life in water, air, and soil. Substances with longer half-lives (i.e., more persistent) may present a greater hazard.

contaminant plume - A body of contaminated ground water spreading from a surface or subsurface source of contamination.

corrosivity - One of the four characteristics of hazardous waste as defined by EPA, based upon pH values of less than 2.0 or greater than 12.5 (see 40 CFR §261.22).

cross media impacts - Results of industrial or waste management activities that affect at least two of the three primary environmental media - air, ground water, and surface water.

crystallizer - Device used to separate the components of a solution, mixture, or slurry into a solid and a liquid phase by the application of cooling, evaporation, or other means.

cyclone - An air pollution control device in which a vortex within a collector propels particles to deposition areas for removal. Cyclones generally deposit the collected particulate matter into a hopper for eventual collection.

damage cases - Situations in which damage to human health and/or the environment has been proved.

dehydration - The removal of bound water or hydrogen and oxygen from a chemical compound in the proportion in which they form water. CKD has a chemically dehydrated nature, which results from the thermal treatment it receives in the kiln system.

densification - The process of making CKD more dense. For example, dust compaction involves the densification of waste material to increase available disposal space and ameliorate dust migration.

destruction and removal efficiency - Percentage of organic hazardous constituents in a waste fuel that are destroyed when the fuel is burned, e.g., in a boiler or industrial furnace.

diatomaceous materials - Natural deposits from a past lake or deep sea environment, composed of silica, which are used as a mild abrasive, as a filtering medium, and for insulation of boilers and blast furnaces.

dilution and attenuation factor (DAF) - A factor used to account for the decrease in concentration of a substance after it is released from a waste management unit, mixes in environmental media (e.g., ground water or surface water), and migrates to a location where a person, plant, or animal might be exposed. As used in this report, mathematically equal to the concentration of a substance in CKD divided by the estimated concentration of the substance at a point of possible exposure.

dioxin - Any of a family of compounds known chemically as dibenzo-p-dioxins. Tests on laboratory animals indicate dioxins are among the more toxic man-made chemicals known. Some dioxins are also potent carcinogens, mutagens, and/or teratogens. Concern about dioxins arises from their potential contamination of commercial products.

dispersion modeling - Mathematical simulation of the transport of a pollutant away from its source in one or more environmental media - air, soils, ground water, or surface water.

disposal ponds - On-site CKD management method in which CKD is stored underwater. Use of ponds creates a permanent hydraulic head on the dust.

distillery sludge - Residues from the removal of alcohol (by distillation) from fermented grain mash.

dolomite - Carbonate rock (dolostone) composed of calcium/magnesium bicarbonate ($CaMg(CO_3)_2$), which is frequently used as a building stone and in the manufacture of bricks for furnaces.

dry process kilns - Cement kilns in which raw materials are ground, conveyed, blended, and stored in a dry condition. The dry raw mix is pneumatically pumped to the upper end of the

kiln. As in all kilns, the raw materials flow down through the sloped kiln as they are thermally treated. Dry process kilns are shorter and more thermally efficient than wet kilns.

dust compaction - A method of dust suppression by compressing CKD to reduce the level of ambient suspendable dust.

dust screw conveyors - Mechanical devices used to transport gross CKD from air pollution control equipment to a storage tank or other components of a cement facility.

dust suppression/control - Any means of reducing the level of ambient breathable dust. Commonly used controls include wetting, compacting, or covering CKD.

effluent - Waste materials discharged to the environment, often in liquid form, such as treated wastewater from a treatment plant.

electric arc furnace dust - Emission control dust or sludge from the primary production of steel in electric arc furnaces. Electric arc furnace dust is a listed hazardous waste under the RCRA waste code K061 (see 40 CFR Part 261).

electrodialysis - A process that uses electrical current and an arrangement of semi-permeable membranes to separate soluble minerals from water.

electrostatic precipitator - An air pollution control device that generates one or more high intensity electrical fields that cause particles to acquire an electrical charge. These charged particles migrate to a collecting surface that has the opposite electrical charge.

emission offset - A reduction in emissions of a nonattainment pollutant from an existing source (or sources) in the same area as a prospective new source of the same pollutant. Emission offsets are required in all nonattainment areas in the U.S.

emissions testing - Sampling and analysis of air emissions from an industrial facility to measure pollutant concentrations.

environmental media - One or more of the following: air, soils, ground water, or surface water.

EP method - Laboratory test used to determine whether a material exhibits the hazardous waste characteristic of toxicity. Materials that are shown to leach one of 14 hazardous constituents at concentrations exceeding 100 times primary drinking water standards are considered EP toxic. The 14 hazardous constituents include arsenic, barium, cadmium, chromium, lead, mercury, selenium, silver, endrin, lindane, methoxychlor, toxaphene, 2,4-D, and 2,4,5-TP (Silvex). This method has been superseded by the Toxicity Characteristic Leaching Procedure (TCLP).

exothermic reaction - Chemical reaction in which heat is evolved.

exposure pathways - The course a substance takes from the point where it is released into the environment (i.e., the source) to an exposed organism. Each exposure pathway includes a source or release from a source, an exposure point (a location of potential contact between an organism and a substance), and an exposure route (the way a substance comes in contact with an organism, such as ingestion, inhalation, and dermal contact).

exposure potential - The likelihood of individuals, resources, or populations being exposed to CKD contaminants.

fabric filters-baghouses - Fabric filters are an air pollution control device in which filters remove particulate matter from gas streams by retaining the particles in a porous structure. Fabric filters are typically used in series to form a baghouse.

fate and transport modeling - Modeling used to predict what will happen to chemicals released to the environment. These models incorporate chemical, physical, and biological transformations, bioaccumulation, and ease of transport based on various physical and chemical properties to predict the movement and fate of each chemical in the environment.

Federal drinking water standards - Contaminant limits for water destined for human consumption established by EPA pursuant to the Safe Drinking Water Act (SDWA).

filter press cake - The semi-solid residue left after a slurry is passed between the plates of a filter press.

finish mill system - Equipment used to convert clinker into finished cement. At the finish milling stage, Portland Cement is produced by grinding clinker together with about five percent gypsum to a fine powder, and then loading it into bulk carriers or packaging it into bags. It is at this stage that various additives along with gypsum are introduced to create specialty Portland Cements.

floc - A clump of solids formed in wastewater treatment by biological or chemical action.

flocculation - Process in which aggregates of solids are formed and settled during wastewater treatment by biological or chemical action.

floodplain - The land areas adjacent to a stream or river consisting of unconsolidated sediments that are occasionally covered by water during and after storm events.

flue gas desulfurization (recovery scrubber) - CKD treatment technology that enables all CKD to be recycled as kiln feed by removing alkalies, chlorides, and sulfates from the dust.

fluid bed recovery process (Fuller process) - Process that thermally treats CKD for recovery. The process is designed to accept CKD generated from a kiln or from stockpiles, pelletize it, and calcine it into clinker on a fluid bed instead of in a typical rotary kiln. This process yields a usable cement clinker product rather than treated CKD.

fluorspar - Material composed of fluorite that is often used as a flux in the smelting of iron or in the chemical industry, and is used as a secondary feed material for cement plants.

fly ash - Non-combustible residual particles from the combustion process, carried by flue gas.

fractional crystallization - The removal of early-formed crystals from an originally homogeneous mixture so that these crystals are unable to react further with the parent mixture (e.g., removal of salt from alkaline CKD wastewater for beneficial use).

freeze-thaw durability - The ability of a material to resist destruction from repeated cycles of freezing and thawing.

fugitive dust - CKD constituent particles suspended in the air by either wind erosion or mechanical disturbances.

fugitive air emissions - Pollutant emissions into the air not caught by a control system.

grab sample - A single sample of a material (e.g., soil, CKD) that is collected for laboratory analysis.

granular bed filters - Air pollution control device in which dust is captured and bound on a porous medium through the principle of adsorption. The most commonly used medium is granular activated carbon.

gravity/inertial separator - Air pollution control device that collects particulate matter by gravity or centrifugal force, but does not depend on a vortex as do cyclones.

gross CKD - The dust collected at the air pollution control device(s) associated with a kiln system. Gross CKD is generated as an inherent process residue at all cement plants.

ground water - The water contained within the pore spaces of subsurface formations below the water table and within the zone of saturation.

ground-water monitoring - Recording of water levels in wells or water quality of samples taken from wells to study either a site specific area (e.g., adjacent to a landfill) or a regional area (county to several county level).

gypsum - Insoluble, evaporite mineral composed of calcium sulfate.

halogen - Any of a group of five chemically-related nonmetallic elements that includes bromine, fluorine, chlorine, iodine, and astatine.

hazardous waste - According to Federal Law (40 CFR 261) a solid waste, or combination of solid wastes, which, because of its quantity, concentration, or physical, chemical, or infectious characteristics, may (1) cause, or significantly contribute to, an increase in mortality or an increase in serious irreversible, or incapacitating reversible, illness; or (2) pose a substantial present or potential hazard to human health or the environment when improperly treated, stored, transported, disposed of, or otherwise managed.

hazardous waste stabilization - The use of a substance (e.g., CKD) as a dewatering and solidifying agent prior to the land disposal of sludges containing hazardous wastes.

health-based levels (HBLs) - As used in this volume, risk-screening criteria for ground water and surface water developed by EPA using chemical-specific toxicological values and equations for calculating preliminary remediation goals for ground and surface water at Superfund sites.

heavy metals - Metallic elements with high atomic weights, e.g., mercury, chromium, cadmium, arsenic, and lead. They can damage living things at low concentrations and tend to accumulate in the food chain.

high sulfur fuel - Kiln fuel containing high levels of sulfur compounds. During combustion of high sulfur fuel, sulfur (in the form of SO_3) will vaporize in the kiln to form sulfur dioxide (SO_2), and condense in the form of sulfates.

hydrated lime - A dry powder obtained by hydrating quicklime (calcium oxide) with enough water to form a hydroxide.

hydration - The formation of a compound by the combination of water with another substance.

hydraulic conductivity - A physical characteristic measuring the ability of water to flow through a solid material, e.g., CKD.

hydrologically downgradient - The direction towards which ground water and surface water flow.

hydrolysis - The reaction of an ion with water to produce either hydronium ion (H_3O^+) or hydroxide ion (OH^-).

ignitability - One of the four characteristics of a hazardous waste as defined by EPA (see 40 CFR Part 261). A solid waste is ignitable if it has the ability to combust at or near 140°F, can cause fire through friction, is an ignitable compressed gas, or is an oxidizer.

induced draft fans - Large fans used to draw air into cement kilns causing kiln combustion gases to flow countercurrent to the raw feed and exit the kiln.

infiltration - The flow of water downward from the land surface (e.g., as managed CKD) through the upper soil layers, which may eventually lead to ground water resources.

inorganic constituents - Chemical substances derived from mineral sources that do not usually contain carbon.

insufflation - The pneumatic introduction of unaggregated CKD into the hot end of the kiln.

ion exchange - Reversible substitution of ions in a crystal with other ions in solution, without disturbance of the crystal lattice or its electrical neutrality. This occurs by diffusion, particularly in crystals where weakly bonded ions form one- or two- dimensional channelways. Artificial ion exchange resins with three-dimensional hydrocarbon networks are commonly used (e.g., in water softeners; for separating isotopes; in desalination; and in the chemical extraction of elements from ores).

iron flue dust - Secondary kiln feed used as an iron additive to achieve the desired consistency of the general kiln feed, depending on the composition and availability of primary feed materials.

karst topography - A type of geographic terrain underlain by carbonate rocks (e.g., limestone) where significant dissolution of the rock has occurred due to flowing ground water. Characteristic features include sinkholes, caves, and streamless valleys.

kiln exhaust - Exhaust gases exiting the upper end of the kiln. Kiln exhaust is sometimes used to pre-dry feed materials prior to conveying them to the kiln.

land reclamation - Process of changing the landscape back to conditions similar to those present at a given location prior to a land altering activity (e.g., excavation of a landfill or quarry).

landfill cover - Material used to cap a landfill at closure. Low-permeability materials (e.g., clay, plastic) are used to prevent rainwater or run-off from entering the landfill and increasing the likelihood of movement of the contaminants from the landfill (e.g., leachate).

landfill liners - Low-permeability materials used in sealing a landfill to prevent leachate from escaping beneath or laterally from a landfill. Liner materials range from bedrock and in-situ clay to synthetic plastics.

landfill - A waste management unit in which material is disposed below topographic grade and is sometimes buried between layers of earth.

leachate - Water that contains a high amount of dissolved solids and is created by liquid percolating through layers of a landfill and collected by the landfill liner or seeps from a landfill to surrounding soil and ground water.

leachate collection system - A system installed in conjunction with a liner to capture the leachate that may be generated from a landfill so that it may be removed and treated.

leather tanning wastes - Chemical wastes generated from the treatment and preservation of hides during leather production.

Lepol kiln - This preheater kiln, also known as a "grate kiln," begins with raw feed nodules containing 10 to 15 percent moisture. In the semidry process, these raw material nodules travel on a grate through a preheater in which they are partially calcined. This partly calcined material then falls through a chute into the rotary kiln where final clinkering takes place. As a result of the partial precalcination the rotary kiln can be one-third the usual length.

lignosulfate - Chemical additive that is used to retard the setting of CKD when it is hydrated and thereby improve its flow characteristics.

limestone quarry - An open mine for extracting limestone from the earth for beneficial use.

limestone - A bedded sedimentary rock composed mainly of calcium carbonate, or a rock type composed of, in general, at least 80 percent of carbonates of calcium and magnesium, which yields lime when burned.

liming agent - A substance used to raise the pH of acidic soils.

low-alkali sand - Also known as "sweet sand," this material is used to balance the high alkali content of the limestone quarried at some facilities and enable the plant to recycle a greater percentage of its generated CKD.

low-sulfur coal - Coal that contains relatively low concentrations of sulfur and emits lower quantities of sulfur oxides when burned.

lowest observed adverse effects levels (LOAELs) - From dose-response relationships, LOAELs are the lowest exposure level at which there are statistically or biologically significant increases in frequency or severity of adverse effects between the control group and the test population.

mag rock - Limestone with a high magnesium content.

masonry cement - A hydraulic cement for use in mortars for masonry construction, containing one or more of the following materials: Portland Cement, Portland blast furnace-slag cement, Portland-pozzolan cement, natural cement, slag cement, or hydraulic lime; and usually containing one or more additional materials (e.g., hydrated lime, limestone, chalk, calcareous shell, talc, slag, or clay) as prepared for this purpose.

Maximum Contaminant Levels (MCLs) - The maximum permissible level promulgated under the Safe Drinking Water Act for a contaminant in water that is delivered to any user of a public water system. Primary MCLs are established in 40 CFR 141 to be protective of human health; secondary MCLs are established in 40 CFR 143 to protect the aesthetic quality of drinking water (e.g., taste, odor, color, and appearance).

maximum exposed individual (MEI) - The actual or hypothetical individual, who based on location, sensitivity, and exposure pattern, is subject to the highest concentration of a substance, and therefore has the highest reasonable risk. The MEI may vary by exposure pathway.

metric ton - A unit of weight measure equivalent to one million grams, or approximately 1.102 short tons.

microbiological stresses - Techniques used in the N-Viro soil technology to kill pathogens and stabilize sludge to produce a "soil-like product."

mineral processing - Steps used to concentrate and refine mineral ores (raw or beneficiated) into more useful forms.

minimum waste heating value limit - A minimum standard established by EPA for the burning of hazardous wastes in cement kilns prior to the promulgation of the BIF rule. Operators of cement kilns burning hazardous wastes with a heating value of at least 5,000 Btu/pound were exempt from RCRA permitting requirements.

MMSOILS - A multimedia model used to estimate the concentrations of contaminants in the environment, as well as human exposure and health risk, associated with the release of chemical substances from waste sites. The model predicts the transport and fate of a chemical in ground water, surface water, soil, the atmosphere, and the food chain.

monofill - A landfill that contains one type of waste, such as CKD.

N-Viro soil - The product of a patented waste treatment process that was developed in 1987, and is used with lime or instead of lime to disinfect and deodorize municipal sewage sludge. N-Viro soil contains between 35 and 75 percent CKD by weight.

National Priorities List - EPA's list of the top-priority hazardous waste sites in the country that are subject to the Superfund Program, as established by the Comprehensive Environmental Response, Compensation, and Liability Act (CERCLA).

net CKD - CKD removed from the kiln system after collection.

New Source Performance Standards (NSPSs) - Federal air pollution control standards that must be achieved by newly operational or significantly modified industrial facilities. These standards include limits on particulate matter emissions from cement plants.

nodulized - Refers to CKD that has been converted into small clumps or "nodules" by treating the dust with water. A pug mill is often used for this purpose.

Non-hygroscopic - Not having the property of readily absorbing moisture from the atmosphere.

Nonattainment areas or status - Air quality control areas not in compliance with the National Ambient Air Quality Standards for a given pollutant.

NPDES permits - EPA permits to discharge wastewaters from a point source into surface waterways, issued under the National Pollutant Discharge Elimination System (NPDES).

oil sludge - The highly viscous fraction left over from petroleum refining that cannot be further refined.

opacity - Refers to the percent decrease in the transmission of light measured in air emissions from the stack of an industrial facility. Cement plants are often required to operate under specific opacity limitations.

organic constituents - In a mixture of elements and/or compounds, those compounds that are carbon-based.

osmosis - Movement of a solvent through a semipermeable membrane into a solution of higher solute concentration that tends to equalize the concentrations of solute on the two sides of the membrane.

overburden - Any unconsolidated material that overlies bedrock.

particle size distributions - The comparative amounts of particles of different diameters within a defined volume.

particulate CKD capture efficiency - A measure of the effectiveness of a CKD recovery technology to remove CKD particulate matter from kiln exhaust gases.

Pearson Correlation Coefficient - A measure of the closeness to a linear relationship between two variables. Also referred to as the true product-moment correlation.

pelletizing - A method in which finely divided material is rolled in a drum or on an inclined disk, so that the particles cling together and form small spherical pellets. This technique is sometimes used to treat CKD prior to disposal or recovery.

perched aquifer - Unconfined ground water separated from an underlying main body of ground water by an impermeable unsaturated zone (e.g., clay layer).

permeability - The capacity of subsurface strata to transmit a fluid, expressed as the rate at which a fluid of standard viscosity (e.g., water) can move a specified distance. Permeability is dependent on the size and shape of pores in the stratum or strata, the size and shape of interconnections between pores, and the extent of these interconnections.

pH - The negative logarithm of the effective hydrogen ion concentration or hydrogen ion activity in gram equivalents per liter used in expressing both acidity and alkalinity on a scale whose values run from 0 to 14, with 7 representing neutrality, numbers less than 7 increasing acidity, and numbers greater than 7 increasing alkalinity.

phosphogypsum - Phosphorus-containing gypsum produced by the controlled reaction of phosphate rock with sulfuric acid during phosphoric acid production.

planetary cooler - Cylinder or series of cylinders attached radially to a rotary kiln that promotes heat exchange between hot clinker and cold air. Planetary coolers have no moving parts and all air passing through them enters the kiln and is used for combustion.

pneumatic conveyance - Transport of material (e.g., CKD) via forced air.

pollution prevention plan - Document that describes the implementation of practices to reduce pollutants in stormwater discharges associated with industrial facilities.

Portland Cement Association - An industry organization representing most North American cement manufacturers.

Portland Cement - A hydraulic cement produced by pulverizing Portland Cement clinker and usually containing a small quantity of calcium sulfate.

pozzolan - A material rich in silica or silica and aluminum that is chemically inert and possesses little or no value as a cementing agent, but, when in a finely divided form and in the presence of water, will react with calcium hydroxide to form compounds possessing cement-like properties. The most commonly available pozzolan in use in the U.S. is fly ash.

precalciner kiln - Suspension preheater kilns that are equipped with a secondary firing system (flash furnace) attached to the lower stage of the preheating tower. These kilns are the most recent advance in cement manufacturing technology.

preheater kiln-suspension - A type of kiln in which raw meal is preheated and partially calcined by passing it through a system of heat exchange cyclones before it enters the kiln. This is the most energy efficient type of kiln available.

pretreatment standards - Wastewater contaminant limits to be achieved by on-site treatment before sending wastewaters to publicly-owned treatment works.

Prevention of Significant Deterioration - A key element of the Clean Air Act that establishes non-degradation of airsheds with acceptable air pollutant levels as the first priority of state-level air quality programs.

process wastewater - Waters used or generated in one or more mineral processing units that have accumulated contaminants to such an extent that they must be removed from the processing unit(s).

products of incomplete combustion (PICs) - Compounds resulting from the incomplete thermal breakdown and oxidation of organic chemicals.

pug mill - A mixer having a stationary cylindrical mixing compartment, with the axis of the cylinder horizontal, and one or more rotating horizontal shafts to which mixing blades or paddles are attached.

pulverized coal - Coal that has been crushed into small pieces to increase the surface area of the coal and thus allow the coal to burn more rapidly.

quicklime - Calcium oxide (CaO).

radionuclides - Elements that emit alpha, beta, and/or gamma rays by the spontaneous disintegration of atomic nuclei.

raw feed - Ground, proportioned, and blended raw materials that are conveyed into the upper end of a cement kiln. These materials are generally comprised of about 80 percent carbonate of lime and 20 percent silica, with much lower quantities of aluminum and iron.

raw mill systems - Components of the cement production process in which crushed raw materials are fed into grinding mills, ground to a fine size range, and blended to obtain the correct composition for kiln feed.

raw mill dryers - Equipment used in the dry process of cement manufacturing to reduce the moisture content of ground, blended raw materials to less than one percent prior to feeding them into the kiln.

RCRA - Resource Conservation and Recovery Act of 1976. The Federal statute that provides EPA with the authority to regulate the treatment, accumulation, storage, disposal, and reclamation of solid and hazardous wastes.

ready mix concrete - Concrete manufactured for delivery to a purchaser in a plastic and unhardened state.

recovery scrubbing - CKD treatment technology also known as the flue gas desulfurization (FGD) process. This technology enables all CKD to be recycled as kiln feed by removing alkalies, chlorides, and sulfates from the dust.

refractory relining - The process of periodically replacing the kiln refractory, a material that is used to protect the steel shell of the kiln from high temperatures generated during clinker production. The kiln refractory usually consists of brick.

rehydration - Reincorporation of water that has been removed from a substance.

residual waste - Unused materials or byproducts of a process that have no immediate use.

reverse osmosis - A flow of fresh water through a semipermeable membrane when pressure is applied to a solution (e.g., seawater) on one side of it.

Ringelmann Chart - A series of shaded illustrations used to measure the opacity of air pollution emissions. The chart ranges from light grey to black and is used to set and enforce emissions standards.

riprap - A foundation, sustaining wall, or layer of stones, chunks of concrete, or similar durable material placed on an embankment or slope to prevent erosion.

risk assessment - A formalized methodology for analyzing the adverse effects resulting from releases of hazardous substances. Risk assessment generally includes the collection of data and background information, an exposure assessment, a hazard assessment, a dose-response evaluation, and risk characterization.

risk potential - As used in this volume, the potential for CKD management at cement plants to contribute to adverse effects via the ground water, surface water, and air pathways, based on a qualitative (i.e., non-modeling) analysis of factors that influence risk.

risk screening criteria - As used in this report, a set of chemical-specific benchmarks used to compare to concentrations measured in CKD for the purpose of determining the intrinsic hazard of the dust. Concentrations in CKD that fell below these criteria were judged to pose a low or negligible risk that did not need further study. Concentrations above the criteria indicated that more detailed study was needed to determine the risks associated with certain CKD constituents and exposure pathways.

road base - Aggregate beneath the macadam of a road that acts as a support or substrate.

rotary coolers - A sloped, revolving cylinder that receives clinker from the kiln. Cooling is achieved by drawing air through the cooler and into the kiln opposite to the flow of clinker. Rotary coolers are frequently located underneath the rotary kiln and are often connected to the kiln by a vertical shaft.

rotary kilns - Horizontal, inclined rotating cylinders, refractory lined and internally fired, designed to produce clinker through the intense heating of raw materials.

saline soils - Soils that contain enough soluble salt to reduce their fertility. The lower limit is usually defined as 0.4 siemens per meter.

seeps/seepage - Springs/leakage to underlying aquifers through stream beds or the emergence of ground water into a stream channel, but may also relate to flow between different aquifer units.

semi-volatile organic compounds - A class of organic compounds that have a moderate tendency to vaporize.

semidry process kiln - see Lepol kiln

sewage sludge stabilization - The use of a substance (e.g., CKD) as a dewatering or solidifying agent for sewage sludges prior to disposal or beneficial use, such as for fertilizer or soil amendment.

shale - Fine-grained, fissile, sedimentary rock composed of clay-sized and silt-sized particles of unspecified mineral composition.

Shapiro-Wilk statistic - A value that is computed to test the null hypothesis that a group of data values are a random sample drawn from a normal distribution.

sintering - Causing to become a coherent mass by heating without melting.

slag - The residue from the melting of metals or the reduction of ores.

slurry - A mixture of water and any finely divided insoluble material, such as Portland Cement, CKD, or clay in suspension. Also, a watery mixture of insoluble material that results from certain pollution control techniques.

slurry walls - A type of containment system that prevents leachate from migrating through ground water systems. Typically, slurry walls are formed in place by excavating a trench outside the edge of a waste management unit or ground water contaminant plume, mixing the removed materials with grout (e.g., bentonite clay, asphalt, etc.) and immediately redepositing the slurried mixture into the trench.

soil-water partition coefficient (K_d) - The equilibrium ratio of a chemical adhering to soil to that present in ground water. Reflects a substance's mobility in ground water, with substances with low K_ds expected to migrate faster in ground water than substances with high K_ds.

soil amendment - Material added to soils to change their chemical characteristics to improve crop production. For example, CKD is used to improve the quality of soil, including pH adjustment, for agricultural purposes.

soil stabilizer - A material used to prevent soil from shifting, subsiding, drifting away as fugitive dust, or eroding.

special wastes - Four categories of wastes, including CKD, for which EPA is required to defer most RCRA Subtitle C requirements until comprehensive studies are presented to the U.S. Congress, and the most appropriate regulatory approach is determined (RCRA Section 3001(b)(3)).

spent pickle liquor - A liquid waste generated by steel finishing operations of facilities within the iron and steel industry. Spent pickle liquor is a listed hazardous waste under the RCRA waste code K062 (see 40 CFR Part 261).

StableSorb - CKD marketed by Keystone Cement Co. as a sewage sludge dewatering agent.

stormwater run-on/run-off collection system - A system for preventing water from infiltrating land-based waste management units (e.g., landfills, waste piles) during storm events. Such systems typically include drainage ditches, land grading, impervious substances, and other measures.

Synthetic Precipitation Leaching Procedure (SPLP) - A laboratory analytical method (No. 1312, SW-846) that simulates land disposal of inorganic wastes in monofills, a situation that often occurs at cement plants.

t-test - A statistical technique used for hypothesis testing, e.g., to determine whether samples have been drawn from the same population.

tertiary air duct - Conveyance used in certain precalciner kilns that runs parallel to the kiln and supplies waste gases from the clinker cooler to the combustion zone in the preheater tower.

tests of proof - Criteria used in this report for evaluating prospective cases in which CKD management has resulted in documented damages to human health and the environment.

total dissolved solids (TDS) - A measure of the dissolved solids in wastewater, effluent, or water bodies. Dissolved solids are disintegrated organic and inorganic material contained in water. Excessive amounts make water unfit to drink or use in industrial processes.

total suspended particulate-ambient - A measure of the concentration of solid particles present in a specific place in the absence of new emissions.

total suspended solids (TSS) - A measure of the suspended solids in wastewater, effluent, or water bodies, determined by using tests for "total suspended non-filterable solids." Suspended solids are small, undissolved particles of solid pollutants.

toxicity - The degree of danger posed by a substance to animals or plant life.

Toxicity Characteristic Leaching Potential (TCLP) - A laboratory method (No. 1311, SW-846) that simulates the generation and release of leachate from an improperly disposed solid waste. This procedure is applied to solid wastes to determine whether they exhibit the hazardous waste characteristic of toxicity.

unconfined aquifer - An aquifer characterized by the absence of an aquitard above it, so that the water table forms the upper boundary of the aquifer and is free to move with atmospheric influences such as atmospheric pressure. Also referred to as a water table aquifer.

uptake/biokinetic (UBK) model - An EPA-developed model used to estimate blood-lead levels in children. The model considers intake from diet, direct inhalation, ingestion of dust, soil, paint, and drinking water.

volatile organic compounds - A class of organic compounds that have a high tendency to vaporize.

volatilization - The process of passing into vapor from a liquid state.

waste stabilization - Treatment with the following reagents (or waste reagents) or combination of reagents to reduce the leachability of hazardous metals or inorganics: (1) Portland Cement; or (2) lime/pozzolans (e.g., fly ash and CKD). This does not preclude the addition of reagents (e.g., iron salts, silicates, and clays) designed to enhance the set/cure time and/or compressive strength (see 40 CFR 268.42).

waste management units - Locations at which wastes are treated, stored, accumulated, recovered for reuse, and/or disposed. Waste management units include wastewater treatment plants, surface impoundments, waste piles, landfills, and quarries.

waste stream - Material containing potentially toxic constituents. In this report, the waste stream of interest is CKD, with different cement plants generating their own streams of CKD with unique chemical compositions.

water table - The level below which the soil or rock is saturated with water. It is also the upper boundary of the saturated zone. At this level, the hydraulic pressure is equal to atmospheric pressure. Also used to refer to an aquifer that exhibits unconfined conditions (i.e., a water table aquifer).

wellhead protection area - An area delineated around and upgradient of a drinking water well in which activities and substances that may result in contamination of a well are regulated.

wet process kilns - A clinker manufacturing process used in rotary kilns in which the feed enters the kiln in the form of a slurry with a moisture content of 30-40 percent. In comparison with dry process kilns of the same diameter, wet process kilns require an additional section (dehydration zone) to drive off the water from the kiln feed. As a result, wet process kilns must be considerably longer to achieve the same production rate.

wet scrubbers - Air pollution control devices that employ water sprays to remove sulfur oxides, particulate matter, and other air pollutants from exhaust (usually combustion) gases.

X-ray diffraction - Reflection of X-rays at definite and characteristic angles from crystal structures, yielding data for identification of a given mineral species.

BIBLIOGRAPHY

Abrons, M.D., et. al. 1985. *Respiratory Effects of Portland Cement Dust. U.S. Department of Commerce, National Technology Information Service.*

Ahn, K.H., et al. 1988. *Solidification of Hazardous Wastes: An Approach Using Cementitious Binders.* Paper From Proceedings of 1988 Pacific Basin Conference on Hazardous Waste. February 1-6. Honolulu, Hawaii.

Air Resources Board, Stationary Source Division, Technical Review Group Emissions Credit Systems and New Source Review Programs: A Report to the Legislature (Dec. 8, 1988).

Alabama Department of Environmental Management, 1984. Letter from H.H. Beiro, Pollution Control Specialist, to M.F. McCarthy, Lehigh Portland Cement Co., Leeds, Alabama. April 19, 1984.

Alabama Department of Environmental Management, 1985. Letter from Kirk S. Kreamer, ADEM, to A.P. Mahatekar, AmTech Services, Inc., August 21, 1985.

Alabama Department of Environmental Management, 1987a. Notice of Noncompliance from S. Jenkins to M. McCarthy, Lehigh Portland Cement Company. February 3, 1987.

Alabama Department of Environmental Management, 1987b. DMR Violation Report, 1st Qtr. 1987, for Lehigh Portland Cement Co., Leeds, Alabama.

American Society for Testing and Materials, 1987. ASTM C150-86, Vol. 04.02. *Concrete and Aggregates.* p. 91.

American Concrete Institute, 1990. *Cement and Concrete Terminology*, American Concrete Institute Committee 116, publication SP-19 (90), Detroit, Michigan.

Amtech Services, Inc., 1986. Letter from M. Holder, Professional Engineer, AmTech Services, Inc. to P. Prysey, ADEM. July 24, 1986.

Anonymous. 1980. *Supplementing Ruminant Feeds with Cement Kiln Dust Improves Livestock Performance, According to Agriculture Canada.* Feedstuffs. June 2. p. 38.

Anonymous. 1981. *Cement Kiln Dust Use as Lime-Potash Fertilizer.* Farm Chemicals. April.

Anonymous. 1982. *A Method For Oil Sludge Solidification and Disposal Using Cement Kiln Dust Has Reclaimed 133 Acres Near Dallas, Texas.* Waste Age. April.

Anonymous. 1984. *Controlling NOx Emissions Can Improve Cement Quality in Kilns.* Chemical Engineering. April 30. pp. 18-19.

Anonymous. 1985. *Mobile Hazardous Waste Treatment Services - What's Available?* Hazardous Waste Consultant. September-October.

Anonymous. 1985. *VA-PASEC Precalcination System Implemented for First Time.* World Cement. December.

Anonymous. 1987. *U.S. Briefs: Cogeneration: Santa Maria Aggregate Corp.* Oil & Gas Journal. August 10. p. 24.

Anonymous. 1988. *EPA, Cities, Industry Press Congress For Incinerator Ash Legislation.* Cogeneration Report. April 22.

Anonymous. 1988. River Cement to Use Hazardous Waste as Fuel. Pit & Quarry. August. p. 150.

Anonymous. 1988. *Toledo City Council Approves Five-Year Contract With National N-Viro Technology, Inc. For Sewage-Agricultural Facility.* PR Newswire. September 21.

Anonymous. 1988. *Toledo Tries a Sludge First.* Engineering News-Record. September 29.

Anonymous. 1988. *Lone Star Introduces World's First Four-Hour Cement.* Concrete Products. December. p. 16.

Anonymous. 1989. *Puerto Rican Cement Company.* Caribbean Update. April. p. 15.

Anonymous. 1989. *Waste Fuel System Installed at Ash Grove.* Pit & Quarry. May. p. 18.

Anonymous. 1989. *Portland Cement Reference Materials Available.* Ceramic Bulletin. September 22. p. 1105.

Anonymous. 1989. Titan Cement Company S.A. Eurobusiness. October.

Anonymous. 1990. *Garbage In, Cement Out.* Forbes. January 8. p. 189.

Anonymous. 1990. *Eye on Recycling.* PIMA. March. p. 16.

Anonymous. 1990. *Industry Barometer.* Pit & Quarry. May. p. 16.

Anonymous. 1990. *Market Set for Decade of Change and Restructuring.* Lloyd's List International. May 31. p. 4.

Anonymous. 1990. *Portland Cement Consumption by Type of Construction.* Concrete Products. June. p. 11.

Anonymous. 1990. *New 2200 tpd Production Line for Ash Grove.* World Cement. October 10. pp. 464-465.

Anonymous. 1990. *Southdown Buys Waste Processing Firms.* Houston Business Journal. October 8. Volume 20, p. 24.

Anonymous. 1990. *Southdown Buys Hazwaste Units.* Chemical Week. October 17. p. 6.

Anonymous. 1990. *Cement Imports Hit Stone Wall.* Journal of Commerce. October 29. p. 13c.

Anonymous. 1991. *1990 Cement Totals.* Pit & Quarry. March. p. 10.

Anonymous. 1991. *A Monthly Analysis of Trends in the Construction & Cement Industries (Issues March-Nov. 1991).* The Monitor.

Anonymous. 1991. *Cement Producer to Buy 12% of Lincoln.* Globe and Mail (Toronto). February 15. p. B7.

Anonymous. 1991. *Near Thomaston, ME, Commercial-Scale Tests Are Underway.* Enironmental Science and Technology. March. p. 358.

Anonymous. 1991. *High Temperature Cement Kiln Offers a Balanced "Industrial Ecosystems for the Safe Recycling of Hazardous Waste.* News Release. April 2.

Anonymous. 1991. *Quicklime Volatilizes PCBs, EPA Finds.* Superfund. June 28.

Anonymous. 1991. *Chloride-Free Potash Fertilizer from Waste SO_2 and Cement Kiln Dust.* Phosphorous and Potassium. July-August. p. 48.

Anonymous. 1991. *"Home-Grown" Scrubber Protects the Environment of an Indian Reservation.* Sulphur. July-August. p. 24.

Anonymous. 1991. *SO_2 Technology Pays for Itself and Then Some.* Coal and Synfuels Technology. January 14. p. 1.

Anonymous. 1991. *Potash Mining in Alsace, France.* Phosphorus and Potassium. September-October. p. 21.

Anonymous. 1991. *Recovery Scrubber Meets Design Goals.* Coal and Synfuels Technology. April 22. p. 5.

Antosh, N. 1988. *Mergers, Foreign Buyouts Stir Up Formerly Dormant Cement Stocks.* Houston Chronicle. April 10. p.1.

ASTM. 1991. *Standard Guide for Commercial Use of Lime Kiln Dusts and Portland Cement Kiln Dusts.* 1990 Annual Book of American Society for Testing and Materials Standards. Volume 11.04. Method Number D5050-90. pp. 172-174.

Barrington, S.F. and A.F. MacKenzie. 1989. *Enrichment of Swine Manures through Cement Kiln Dust Incorporation.* Biological Wastes. Volume 29, Number 1. pp. 1-10.

Beers, A., 1987. *Hazardous Waste Incineration: The Cement Kiln Option*, New York State Legislative Commission on Toxic Substances and Hazardous Wastes, Albany, New York. December 1987.

Betteker, James M., et al. 1986. *Solidification/Stabilization of Contaminated Dredged Material.* Proceedings of Mid-Atlantic Industrial Waste Conference. June 29-July 1. Lancaster, Pennsylvania.

Bhatty, M.S.Y. 1984. *Use of Cement Kiln Dust in Blended Cements.* World Cement. May. Volume 15, Number 4. pp. 126-134.

Bhatty, M.S.Y. 1985. *Use of Cement Kiln Dust in Blended Cements: Alkali-Aggregate Reaction Expansion*. World Cement. December. Volume 16, number 10. pp. 386, 388-390, 392.

Billings, Clayton H. 1992. *Screw Press/Kiln Dust Combination Doubles Drying Bed Production*. Public Works. May.

Boynton, R.S., 1980. *Chemistry and Technology of Lime and Limestone*, Second Edition, John Wiley and Sons, New York, New York.

Bryansk Technical Institute. Date Unknown. *Solution for Building Applications Containing Portland Cement, Cement Kiln Dust, and Phosphogypsum*.

Bureau of Mines. 1989. *Minerals Yearbook, Vol. 1, Metals and Minerals, Potash* (James P. Searls auth.). Department of the Interior. pp. 801-805.

Burnet, G. 1987. *Alumina Recovery from Fly Ash by the Lime-Soda Sinter Process*. Proceedings of the International Symposium on Ash. February 2. Pretoria, South Africa.

Burnham, J.C. 1988. *Cement Kiln Dust/Lime Treatment or Municipal Sludge Cake, Alternative Methods For Microbial and Odor Control*. Paper from Proceedings of National Conference on Municipal Sewage Treatment Plant Sludge Management. June 27-29. Palm Beach, Florida.

Burnham, J.C., et al. 1990. *Cement Kiln Dust Stabilization of Municipal Wastewater Sludge*. Annual International Solid Waste Exposition "Vancouver 90." August. Canada.

Bush, R.S. and W.G. Nicholson. 1985. *The Effect of Cement Kiln Dust on Tissue Accumulation of Trace Minerals in Steers*. Canadian Journal of Animal Science. June. Volume 65. pp. 429-435.

Cal. Admin Code tit. 22, § 66260.10 (also referred to as the California Code of Regulations).

Cal. Admin. Code tit. 22, § 66261.120.

Cal. Admin. Code tit. 22, § 66261.124.

Cal. Admin. Code tit. 22, § 66261.126(a).

Cal. Admin. Code tit. 22, § 66261.126(c).

Cal. Admin. Code tit. 22, § 66261.126(d).

Cal. Health and Safety Code § 25141.1.

Cal. Health and Safety Code §§ 39000-44384.

Cal. Health and Safety Code §§ 41502-41507.

Cal. Health and Safety Code §§ 41701, 41704.

Cal. Health and Safety Code §§ 42400-42402.

Cal. Water Code §§ 13172, 13226-13227.

Cal. Water Code §§ 13261.

Cal. Water Code §§ 13300-13306.

Cal. Water Code § 13340.

Cal. Water Code §§ 13350-13371.

Cal. Water Code §§ 13385, 13387.

Cantu, T. 1990. *Dust Removal at Lincoln Heights to Cost Alamo Cement $1.5 Million.* San Antonio Business Journal. November 9. Volume 4, p. 3.

Cement Plant Resources Group, draft Final Report on Cement Plant Excess Emissions (July 31, 1991).

Chadbourne, J. and E. Bouse, General Portland, 1985. Los Robles Cement Plant Cement Kiln Dust Waste Classification Report. August. p. 5.

Chari, N.R. and D.K. Sahu. 1980. *Studies on the Feasibility of Recovery of Potassium Salts from Cement Kiln Dust.* Fertilizer Technology. Volume 17. pp. 69-70.

Chemical Prices Weekly. 1992. *Potassium Sulfate.* Ending December 25. p. 28.

Cohen, S.M. 1992. *Fluid Bed Dust Recovery.* Paper presented at the Portland Cement Association Seminar on Emerging Technologies for Kiln Dust Management. March 4. Chicago, Illinois.

Constantino, D. 1989. *High-Tech Cement.* Pit & Quarry. March. pp. 31-32.

Dann, P.R., B.S. Dear, and R.B. Cunningham. 1989. *Comparison of Sewage Ash, Crushed Limestone, and Cement Kiln Dust as Ameliorants for Acid Soils.* Australian Journal of Experimental Agriculture. Volume 29. pp. 541-549.

Davis, Thomas A., et al. 1975. *Disposal and Utilization of Waste Kiln Dust From Cement Industry.* Southern Research Institute. May. p. 17.

Department of Ecology, State of Washington, 1991. *The Model Toxics Control Act Cleanup Regulation, Chapter 173-340 WAC.* As amended, February, 1991. p. 108.

Department of Ecology, State of Washington, 1992. *Site Hazard Assessment, Markey Property, Parcel 4, South 96th Street/10th Avenue South, Seattle, Washington.* September, 1992.

Department of Ecology, State of Washington, 1992. *The Model Toxics Control Act Cleanup Regulation, Chapter 173-340 WAC.* As amended, February, 1992. p. 93.

Department of Ecology, State of Washington, 1992. *Washington Ranking Method, Scoring Manual.* As amended, April, 1992.

Department of Health and Environmental Sciences, State of Montana, 1990. *State of Montana ex. rel. v. Ash Grove Cement West, Inc.* Complaint and Application for Injunction, Cause No. 8442, Montana 5th Judicial District Court, Jefferson County. December 11, 1990.

Department of Health and Environmental Sciences, State of Montana, 1990. *State of Montana ex. rel. v. Ash Grove Cement West, Inc.*, Consent Decree, Stipulation, and Order, Cause No. 8442, Montana 5th Judicial District Court, Jefferson County. December 19, 1990.

Dodds, J. Date Unknown. *Waste Tires as Auxiliary Fuel for Cement Kilns.* U.S. Department of Energy, Office of Industrial Programs.

Dodds, J. 1984. *Scrap Tire Fuel for Cement Kilns, Exchange Meetings Summary.* U.S. Department of Energy. October 2.

Duda, W.H., 1976. *Cement-Data-Book: International Process Engineering in the Cement Industry.* Bauverlag GMBH Wiesbaden and Berlin, pp. 403-417.

Ecology and Environment, Inc. 1990. *Environmental Priorities Initiative, Preliminary Assessment, Farmland Industries Site, Coffeyville, KS.* Prepared for U.S. Environmental Protection Agency, Hazardous Site Evaluation Division, October 15.

Eger, V.G. and O.N. Mandryka. 1984. *The Possibility of Using Bentonite Clay for Purification of Wastewaters From Apatite Processing.* Journal of Applied Chemistry of the USSR. Volume 57. pp. 2420-2422.

Emission Offset Interpretive Ruling, 40 CFR Part 51, Appendix S.

Energy Systems. 1991. Promotional Bulletin - N-Viro Soil.

Engineering Enterprises, Inc. 1991. *Evaluation of the Potential for Migration of Hazardous Waste Constituents from the Disposal Site to Water Supply Sources, Farmland Industries, Coffeyville, Kansas.*

Engineering-Science, 1987. *Background Information Document for the Development of Regulations to Control the Burning of Hazardous Wastes in Boilers and Industrial Furnaces, Volume II: Industrial Furnaces*, submitted to U.S. Environmental Protection Agency, Waste Treatment Branch, Washington, D.C. January 1987.

Environmental Toxicology International, 1992. *All Fired Up: Burning Hazardous Waste in Cement Kilns*, Seattle, Washington.

ESSROC Materials, Inc., 1992. Particle size distribution of "typical stack dust," February 14, 1992. Submitted on November 3, 1992 in response to RCRA Section 3007 request for information by U.S. EPA, August 18, 1992.

Felix, A., D.R. Rao, C.B. Chawan, and P.I. Ikem. 1980. *Effect of Cement Kiln Dust on Nutrient Digestibility in Sheep.* Annual Research Report: School of Agriculture, Alabama A&M. pp. 103-109.

Flachowsky, G., H.J. Lohnert, G. Stubedorff, E. Flachowsky, G. Staupendahl, and A. Hennig. 1982. *The Use of Portland Cement Kiln Dust in the Feeding of Fattening Bulls.* Archiv fur Tierernahrung. Volume 32. pp. 93-98.

Galvano, G., A. Lanza, L. Chiofalo, and M. Mal'an. 1982. *Cement Kiln Dust as a Mineral Source in Feeding Ruminants.* World Review of Animal Production. Volume 18, Number 4. pp. 63-71.

Garrett-Price, B.A. 1985. *Potential for Energy Conservation in the Cement Industry.* U.S. Department of Energy. February.

GeoEngineers, Inc., 1989. *Environmental Site Assessment, Cement Kiln Dust Landfill, Markey Machinery Property, Seattle, Washington.* Prepared for Helsell, Fetterman, Martin, Todd, & Hokanson. August, 1989.

GeoEngineers, Inc., 1990. *Environmental Sampling Report, Upper Fill, Proposed Parcel 4, South 96th Street & 10th Avenue South, Seattle, Washington.* Prepared for Helsell, Fetterman, Martin, Todd & Hokanson. June, 1990.

Godbey, T. 1991. *Re-evaluating Dust Control in Cement Operations.* Pit & Quarry. April. pp. 27-34.

Gossman, D. 1992. *The Reuse of Petroleum and Petroleum Waste in Cement Kilns.* Environmental Progress. Volume 11, Number 1. February. pp. 1-6.

Harding Lawson Associates, 1984. *Inspection of Ground-water Monitoring, Farmland Industries, Coffeyville, Kansas*, Draft Report.

Hartline, C. 1990. *Dealing with Dust Control.* Pit & Quarry. December. pp. 22-25.

Haynes, B., and G. Kramer, 1982. *Characterization of U.S. Cement Kiln Dust.* Bureau of Mines Information Circular (IC) 8885, U.S. Department of Interior. Bureau of Mines. Office of Assistant Director. Minerals and Materials Research, Washington, D.C.

Hogue, D.E., P.J. Van Soest, J.R. Stouffer, G.H. Earl, W.H. Gutenmann, and D.J. Lisk. 1981. *Cement Kiln Dust as a Selenium Source in Sheep Rations.* The Cornell Veterinarian. January. Volume 71. pp. 69-75.

ICF Incorporated, 1990. *Regulatory Impact Analysis for the Proposed Rulemaking on Corrective Action for Solid Waste Management Units (Draft).* Prepared for Economic Analysis Staff, Office of Solid Waste, U.S. EPA. June 25.

ICF Incorporated, 1993. *Technical Background Document: Cost and Economic Impacts of Alternatives to Current CKD Disposal Practices (in progress).*

Iowa Department of Water, Air and Waste Management, 1984. *Calmus Creek Water Quality Study, May-August, 1984.*

Iowa Department of Natural Resources, 1990. Record of Decision for Northwestern States Portland Cement Company Site, Mason City, Iowa. June, 1990.

International Trade Association, 1993. *U.S. Industrial Outlook, 1993.* Washington, D.C., pp. 7-5 to 7-8.

Johnson, F. 1983. *Recover Fugitive Cement Dust at Dockside.* Pit & Quarry. September. p. 68.

Johnson, W. 1988. *Cement.* Cement Minerals Yearbook. pp. 201-228.

Johnson, W., 1992. *Cement, Annual Report 1990,* U.S. Bureau of Mines, Washington, D.C. April 1992.

Johnson, W and H. Sullivan. 1990. *Cement in 1989.* U.S. Department of Interior, Bureau of Mines. July 25.

Johnson, W and H. Sullivan. 1991. *Cement in February 1991.* U.S. Department of Interior, Bureau of Mines. April 12.

Karadzhyan, A.M., A.G. Chirkinyan, L.V. Efremova, and A.A. Evoyan. 1982. *Effect of Cement Kiln Dust on Growth and Development of Young Cattle.* Trudy Erevanskogo Zootekhnichesko-veterinarnogo Instituta. Number 53. pp. 10-14.

Kelley, W.D., D.C. Martens, R.B. Reneau, Jr., and T.W. Simpson, 1984. *Agricultural Use of Sewage Sludge: A Literature Review.* Bulletin 143. Virginia Water Resources Research Center, Virginia Polytechnic Institute and State University, Blacksburg, Virginia. December. p. 38.

Keynote Address by Carol Browner, EPA Administrator, at the Clean Air Marketplace 1993. September 9, 1993.

Keystone Cement Company. Date Unknown. *Stablesorb: A Coproduct of Cement Manufacturing With a Variety of Uses.* Product Brochure.

Kirk-Othmer, 1979. Cement, *Kirk-Othmer Encyclopedia of Chemical Technology,* Volume 5, John Wiley and Sons, New York, New York.

Kohlhaas, B., *et al.*, 1983. *Cement Engineer's Handbook.* Bauverlag GMBH, Wiesbaden and Berlin. p. 624.

Kosmatka, S. and Panarese, W., 1990. *Design and Control of Concrete Mixtures.* 13th Ed. Portland Cement Association. Skokie, Illinois. pp. 15-16, 42-43.

Kovacik, T.L. 1987. *Successful Recycling for Sludge and Solid Waste.* BioCycle Southeast Conference. November 4. Orlando, Florida.

Kovacik, T.L. 1988. *Sludge, Kiln Dust Make Fertilizer.* Water Engineering Management. December.

Kriech, Anthony J., 1992. *Evaluation of Hot Mix Asphalt for Leachability*, Heritage Research Group, October.

Kriech, Anthony J., *1992. Leachability of Asphalt and Concrete Pavements*, Heritage Research Group, March.

Kulich, J. and A. Ragas. 1973. *Furnace Dusts from Cement Works as a Source of Available Nutrients.* Pol'nohospodarstvo. Volume 19, Number 2. pp. 113-121.

Lachica, E.D. 1990. *Agency Rules Cement Imports Hurt U.S. Firms.* Wall Street Journal. August 14. p. 9.

Lebel, R. 1990. *Cement Producers Say They Can Burn Old Tire in Kilns.* Montreal Gazette. May 19. p. C-3.

Lehigh Portland Cement Company, 1984. Letter from R. Gebhardt to H. Beiro, ADEM. May 30, 1984.

Lehigh Portland Cement Company, 1987. Letter from L. Copple to S. Jenkins, Alabama Department of Environmental Management. February 20, 1987.

Lehigh Portland Cement Company, 1989. *Site Investigation Protocol for the Lehigh Portland Cement Company Plant, Mason City, Iowa.* Prepared for Lehigh Portland by Layne GeoSciences, Inc. October, 1989.

Lehigh Portland Cement Company, 1991. *Remedial Investigation/Feasibility Study for the Lehigh Portland Cement Company Plant, Mason City, Iowa.* Prepared by Layne GeoSciences, Inc. April, 1991.

Letter from Stanford Lau, Toxic Substances Control Division, to Ralph Mitchell, Lone Star Industries, Inc., July 20, 1988.

Letter from Mindy Koch, Acting Chief, Waste Management Division, Department of Natural Resources, to Myron Black, LaFarge Corporation, dated September 27, 1991.

Libicki, J. 1984. *Reclamation in Mountains, Foothills, and Plains: Doing it Right.* 9th Annual Meeting of the Canadian Land Reclamation Association. August 21. Canada.

Longenbach, J, et. al. 1991. *EPA/CKD Meeting Agenda, Keystone Cement Company.* Keystone Cement Company. July 30.

Looker, Dan. 1990. *Boone Couple Adds Fuel to Sustainable Ag Debate.* Des Moines Register. January 10. Volume 141, number 171. p. 1A+.

Lynch, M. 1991. *Steel Cement Plant Set to Convert Slag.* Australia Financial Review. March 20.

Martin Marietta Corporation. Date Unknown. *Poured, Moulded, or Pressed Concrete Blocks Contain Aggregate, Cement, and Cement Kiln Dust.*

May, A., J.W. Sweeney, and J.R. Cobble. 1983. *Use of Florida Phosphogypsum in Synthetic Construction Aggregate.* Florida Institute of Phosphate Research Publication Number 01-008-026.

McCord, A.T. 1977. *Cement Kiln Dust Treatment - By Leaching with Hot Potassium Chloride Solution to Recover Alkali Values.* U.S. Patent No. 4031184.

McNamara, V. 1990. *Southdown Buys Waste Processors.* Houston Business Journal. June 11. Volume 20, p. 10.

Mehta, P.K. 1986. *Concrete: Structure, Properties, and Materials*, Prentice Hall, Englewood Cliffs, NJ.

Metry, A.A., et al. 1985. *A Cost-Effective Approach For Stabilization and Closure of an Organic Waste Superfund Site.* 31 Annual Meeting of the Institute of Environmental Sciences. April 29. Las Vegas, Nevada.

Mettauer, H. and A.P. Conesa. 1981. *Agronomic Value of Residual Cement Dust.* Comptes Rendus des Seances de l'Academie d'Agriculture de France. Volume 67, Number 9. pp. 772-781.

Mich. Admin. Code §§ 299.4102(h) (viii) and 299.4301(3).

Mich. Admin. Code §§ 336.1203 and 336.1208.

Mich. Admin. Code § 336.1301 (1)(a).

Mich. Admin. Code §§ 336.1371-72.

Mich. Comp. Laws § 299.407.

Mich. Comp. Laws § 299.408(3).

Mich. Comp. Laws §§ 323.1-323.13.

Mich. Comp. Laws § 336.13.

Mich. Comp. Laws §§ 401-436.

Michigan Department of Natural Resources, 1993. Letter from John W. Vick, Environmental Response Division to Rebecca Beasly, Assistant General Council, National Gypsum Company. May, 1993.

Michigan Department of Natural Resources, 1993. Interoffice Communication from Jim Sygo, Chief, Waste Management Division, to Russell Harding, Deputy Director. April, 1993.

Michigan Department of Natural Resources, 1993. Photos of National Gypsum CKD pile taken during MDNR site visits on March 30, 1993 and April 22, 1993. Videotape of National Gypsum CKD pile taken by John W. Vick on April 30, 1993.

Miller, C.T., D.G. Bensch, and D.C. Colony. 1980. *Use of Cement Kiln Dust and Fly Ash in Pozzolanic Concrete Base Courses.* Transportation Research Record. pp. 36-41.

Morgan, David S., *et al.*, 1984. *Oil Sludge Solidification Using Cement Kiln Dust.* Journal of Environmental Engineering. October.

Morrison, G.L. 1990. *CKD and Flue Gas Scrubbing: The Demonstration at Dragon Products Company.* July. p. 7.

Morrison, G.L. 1990. *Exhaust Gas Scrubbing and Waste Elimination, An Application of the Recovery Scrubber to a Cement Kiln.* Paper presented at the 1990 SO_2 Control Symposium. May 8. New Orleans, Louisiana.

Morrison, G.L. 1991. *Flue Gas Scrubbing and Waste Elimination - An Application of the Recovery Scrubber.* Paper presented at The World Coal Institute Conference and Exhibition on Coal in the Environment. April 3. London, United Kingdom.

Morrison, G.L. 1992. *CKD Management Using a Recovery Scrubber: Operation and Economics.* Paper presented at the Portland Cement Association Seminar on Emerging Technologies for Kiln Dust Management. March 4. Chicago, Illinois.

Morrison, G.L., 1993. *Passamaquoddy Technology Recovery Scrubber Operations Update and Forecast.* July. pg. 7.

Mournighan, R.E. and M. Branscome. 1987. *Hazardous Waste Combustion in Industrial Processes: Cement and Lime Kilns.* U.S. Environmental Protection Agency, Office of Research and Development. November.

Muelberg, P.E., *et al.*, 1977. *Industrial Process Profiles for Environmental Use: Chapter 21, The Cement Industry,* U.S. Environmental Protection Agency, Office of Research and Development, Industrial Environmental Research Laboratory, Cincinnati, Ohio. February 1977.

Naylor, L.M., J.C. Dagneau, and I.J. Kugelman. 1985. *Cement Kiln Dust - A Resource Too Valuable to Waste?* Proceedings of the Seventeenth Mid-Atlantic Industrial Waste Conference on Industrial and Hazardous Wastes. June 23. pp. 353-366.

Naylor, L.M., E.A. Seme, and T.J. Gallagher, 1986. *Using Industrial Wastes in Agriculture.* BioCycle. February. pp. 28-30.

Nebgen, J.W., et al. 1976. *Use of Waste Sulfate For Remedial Treatment of Soils, Volume I, Discussion of Results.* U.S. Department of Transportation, Federal Highway Administration. August.

Newton, G.L. and O.M. Hale. 1979. *Cement Kiln Dust and Carboxylin as Feed Additives for Swine.* Journal of Animal Science. October. Volume 49. pp. 908-914.

Nicholson Realty. Date Unknown. *Cementitious-hardening Paving Base Composition Using Waste Materials.*

Noller, C.H., J.L. White, and W.E. Wheeler. 1980. *Characterization of Cement Kiln Dusts (Fed to Animals) and Animal Response.* Journal of Dairy Science. November. Volume 63. pp. 1947-1952.

Norman, J.R. 1987. *Battling for Survival in the Concrete Jungle.* Business Week. September 14. pp. 66-74.

Northwestern States Portland Cement Company, 1985. *Hydrogeologic Investigation - West Quarry Site, Northwestern States Portland Cement Company, Mason City, Iowa.* Prepared by IT Corporation. July, 1985.

Northwestern States Portland Cement Company, 1989. *Remedial Investigation/Feasibility Study on the West Quarry, Mason City, Iowa.* Prepared by Layne Geosciences, Inc. Project No. 61.1099.

N-Viro Achieves Record Year. PR Newswire. February 19, 1992.

Ohio Environmental Protection Agency, 1986. *Preliminary Assessment, Southwestern Portland Cement, Fairborn, Ohio (Landfill #6), Part 3 - Description of Hazardous Conditions and Incidents.* July 18, 1986.

Ohio Environmental Protection Agency, 1991. Memo from Louise T. Snyder, DWQPA, SDWO on the Southwestern Portland Cement facility, Landfill #1. September 9, 1991.

Ohio Environmental Protection Agency, 1992. *Director's Final Findings and Order in the Matter of Southdown, Inc., 506 East Xenia Drive, Fairborn, Ohio.*

Ohio Environmental Protection Agency, 1993. *Fact Sheet: Southwestern Portland Cement Company -- Landfill No. 6, Fairborn, Ohio.* March, 1993.

Pennsylvania Department of Environmental Resources 1992 Water Quality Assessment.

Peray, K.E., 1986. *The Rotary Cement Kiln*, Second Edition, Chemical Publishing Co., Inc., New York, New York.

Personal communication with Barb Rosenbaum, Michigan Department of Natural Resources, Air Quality Division, September 10, 1993.

Personal communication with Ben Haynes, Engineering, Technology, and Research Division, Bureau of Mines, U.S. Department of Interior, November 1992.

Personal communication with Brian Graf, ESSROC Materials, Inc. (Logansport, IN), March 17, 1992.

Personal communication with Bob Zabick, Wayne County Health Department, Air Pollution Control Division, Enforcement, October 13, 1992.

Personal communication with Brad Venman, Department of Natural Resources, Waste Management Division, October 9, 1992.

Personal communication with C. McRoy, Alabama Department of Environmental Management. October, 1992.

Personal communication with Charlie Klotz, Safety Training, and Environmental Manager, Lehigh Portland Cement Company, Leeds, Alabama facility. 1993

Personal communication with Chris Marxen, California Environmental Protection Agency, Department of Toxic Substances, Waste Evaluation Unit, September 10, 1993.

Personal communication with Clifton Calderwood, Manager Compliance Division, San Joaquin Valley Air Basin, March 31, 1993.

Personal communication with Craig Southworth, Ash Grove Cement Company, May 20, 1993.

Personal communication with Dan McGee, Michigan Department of Natural Resources, January 22, 1993.

Personal communication with Doug Glasford and Bill Fischer, Keystone Cement, November 24, 1992.

Personal communication with Dr. Donna Waltz, Center for Veterinary Medicine, Animal Feeds Division, FDA, November 1992.

Personal communication with Earnest Hire, Texas Natural Resources Conservation Commission, Industrial and Hazardous Waste Enforcement Section, September 10, 1993.

Personal communication with Ed Kendig, Compliance Director, Monterey Bay Air Pollution Control District, July 28, 1992.

Personal communication with Everett Spenser, EPA Region VI, Enforcement Branch, September 9, 1993.

Personal communication with facility personnel during EPA-CKD sampling visit, Texas Industries, Inc., March 1992.

Personal communication with Fred Fontus, California Department of Environmental Protection, Department of Toxic Substances, September, 10, 1993.

Personal communication with Garrett Morrison, Passamaquoddy Technology, November 24, 1992 and July 2, 1993.

Personal communication with Gary Linns, Pennsylvania Department of Environmental Resources, Bureau of Air Quality, Air Quality Control Division, October 9, 1992.

Personal communication with Greg Chee, Air Quality Engineer, North Central Coast Air Basin, March 3, 1993.

Personal communication with Hans Steuch, Director of Engineering, Ash Grove West, December 9, 1992.

Personal communication with Harry Hackett, Holnam, Dundee, Michigan, January 28, 1993.

Personal Communication with Henry Voldbaek, Ash Grove, Inkom, Idaho, December 9, 1992.

Personal communication with Hillary Inyang, Professor, University of Wisconsin, November 16, 1992.

Personal communication with J. Patrick Nicholson, N-Viro Soil, December 7, 1992.

Personal communication with JoAnn Merrick, Acting Chief, Compliance and Enforcement Section, Waste Management Division, Michigan Department of Natural Resources. July, 1993.

Personal communication with John McDowell, DOE, December 7, 1992.

Personal communication with John W. Vick, Environmental Quality Analyst, Environmental Response Division, Michigan Department of Natural Resources, 1993.

Personal communication with M. Lehar, Ohio Environmental Protection Agency. January, 1992.

Personal communication with Marc Saffley, Soil Conservation Service (SCS), November 18, 1992.

Personal communication with Maune Currie, Michigan Department of Natural Resources, Regional Office, October 10, 1992.

Personal communication with Michael Kussow, Air Pollution Control Officer, North Sacramento Valley Air Quality Monitoring District, August 11, 1993.

Personal communication with Mike Rafalowski, DOT-FHA, November 16, 1992.

Personal communication with Pete Ostlund, Chief of Industrial Permits Section, Surface Water Quality Division, Michigan Department of Natural Resources, September 15, 1992.

Personal communication with plant personnel, Ash Grove Cement West, Montana City, Montana facility. July, 1993.

Personal communication with Reno Vacheski, Pennsylvania Department of Environmental Resources, Region II, Waste Management Bureau, September 10, 1993.

Personal communication with Richard Lee, Natural Resources Conservation Commission, Air Quality Program, Compliance Division, August 25, 1993.

Personal communication with Rick Ruddell, Watershed Management Division, and Earnest Heyer, Field Operations Division, May 16, 1993.

Personal communication with Robert Bastion, Office of Water-Wastewater Enforcement, EPA, November 1992.

Personal communication with S. Jenkins, Alabama Department of Environmental Management. January, 1992.

Personal communication with Sam Barrett, Field Investigator, Texas Water Commission, June 1992, November 1992, and July 1993.

Personal communication with Sam Sloan, Pennsylvania Department of Environmental Resources, Bureau of Waste Management, Division of Municipal and Residual Waste, September 10, 1993.

Personal communication with Sidney Cohen, Fuller Company, November 13, 1992 and July 20, 1993.

Personal communication with Thomas Schneider, Site Coordinator, Ohio Environmental Protection Agency. April, 1993.

Personal communication with Tom Krinke, Air Quality Specialist, Compliance Section, San Bernadino Air Quality Control District, July 28, 1992.

Personal communication with Tom Rohrer, Chief of Enforcement Unit, Surface Water Quality Division, May 24, 1993.

Portland Cement, Kackman, A.H. and Brown, R.W., Section Editors; *SME Mineral Processing Handbook*, Society of Mining Engineers of the American Institute of Mining, Metallurgical, and Petroleum Engineers, Inc., New York, NY, 1985, Vol. 2, Section 26, pp. 26-1 to 26-52.

Pond, W.G., D.A. Hill, C.L. Ferrell, and L. Krook. 1982. *Bone Lesions in Growing Swine Fed 3 Percent Cement Kiln Dust as a Source of Calcium*. Journal of Animal Science. January. Volume 54. pp. 82-88.

Portland Cement Association, 1984. *U.S. Cement Industry - an Economic Report*, Skokie, Illinois. January 1984.

Portland Cement Association, 1991a. PCA Cement Kiln Dust Survey: Response from Lehigh Portland Cement Company, Leeds, Alabama.

Portland Cement Association, 1991b. PCA Cement Kiln Dust Survey: Response from the Southwestern Portland Cement Company, Fairborn, Ohio.

Portland Cement Association, 1991c. PCA Cement Kiln Dust Survey: Response from Holnam, Inc., Artesia, Mississippi.

Portland Cement Association, 1991d. PCA Cement Kiln Dust Survey: Response from Holnam, Inc., Mason City, Iowa.

Portland Cement Association, 1992a. *U.S. Cement Industry Fact Sheet*, 10th Edition, Market and Economic Research, Skokie, Illinois. April 1992.

Portland Cement Association, 1992b. *U.S. and Canadian Portland Cement Industry: Plant Information Summary 1991*, Market and Economic Research, Skokie, Illinois. August, 1992.

Portland Cement Association, 1992c. *An Analysis of Selected Trace Metals in Cement and Kiln Dust (Draft).* PCA Report SP109T, Skokie, IL.

Portland Cement Association, 1992d. *An Analysis of Selected Trace Metals in Cement and Kiln Dust.* PCA Report SP109T, Skokie, IL, 56 pages.

Portland Cement Association, 1992e. PCA Cement Kiln Dust Survey: Response from Ash Grove West, Inc., Montana City, Montana.

Ramakrishnan, V. 1986. *Evaluation of Kiln Dust in Concrete.* American Concrete Institute. pp. 821-839.

Ramakrishnan, V. and P. Balaguru. 1987. *Durability of Concrete Containing Cement Kiln Dust.* American Concrete Institute. pp. 305-321.

Ravindrajah, R.S. 1982. *Usage of Cement Kiln Dust in Concrete.* International Journal of Cement Composites and Lightweight Concrete. May. Volume 4, Number 2. pp. 95-102.

Razzell, W.E. 1990. *Chemical Fixation, Solidification of Hazardous Waste.* Waste Management Resources. April.

Reardon, Patrick W., Jr., 1991. "Low alkali cement requirements for Northeast U.S. Markets," Cement Technology. November. pp. 61-63.

Reed, J.E., et. al. 1983. *Co-firing of Refuse-Derived Fuel (RDF) with Natural Gas in a Cement Kiln, Summary of Test Results.* Prepared for the U.S. Department of Energy, Office of Industrial Programs. March.

Regents of the University of California. 1986. *High Iron Hydraulic Cement Manufactured from Red Mud and Cement Kiln Dust.* PCT Patent Application Number WO--86-05773. October 9.

Ringelmann's Scale for Grading the Density of Smoke as published in United States Bureau of Mines Information Circular 8333.

Roberts, A. 1990. *French Firm to Challenge Brittish Cement Imports.* Virginian-Pilot. June 28. pp. C8-C9.

Roginski, E.E. and W.E. Wheeler. 1978. *A Growth Effect of Georgia Cement Kiln Dust in Rats.* Federation Proceedings. Volume 37. p. 404.

Roginski, E.E. and W.E. Wheeler. 1979. *The Response of Monogastric Species to Cement Kiln Dust in the Diet.* Federation Proceedings. Volume 38. p. 614.

Rumsey, G.L., W.H. Gutenmann, and D.J. Lisk. 1981. *Cement Kiln Dust as an Additive in the Diets of Rainbow Trout.* Progressive Fish-Culturist. Volume 43. pp. 88-90.

Saito, I, et. al. 1987. *Effective Use of Waste Tyres by Gasification in Cement Plant.* World Cement. September. pp. 264-269.

Sanborn, S., 1992. *Cement & Aggregates,* Value Line Publishing. July 24, 1992.

Sansbury, T. 1988. *Cement Makers Provide Market for Hazardous Waste, as Fuel. Journal of Commerce.* December 8. p. 4b.

Sapp, J.E., 1981. *Energy and Materials Flows in the Cement Industry,* prepared for U.S. Department of Energy, June 1981.

Schiavi, W. 1990. *Solid Improvements on an Old Idea.* Pit & Quarry. September. pp. 30-37.

Seebacher, N. 1991. *Cementing a Spot on the Fortune 500.* The Detroit News. April 14. pp. F1-4.

Sell, Nancy J. and Fritz A. Fischbach. 1978. *Pelletizing Waste Cement Kiln Dust for More Efficient Recycling.* Industrial and Engineering Chemistry, Process Design and Development. Volume 17, Number 4. October. pp. 468-473.

Sherwood, P.T., L.W. Tubey, and P.G. Roe. 1977. *The Use of Waste and Low-Grade Materials in Road Construction.* Transport and Road Research Laboratory. Crowthorn, England.

Smith, J.D., 1990. Cement Kilns 1990, *EI Digest,* Environmental Information, Ltd. June 1990.

Smith, J.D., 1991. Cement Kilns 1991, *EI Digest,* Environmental Information, Ltd. August 1991. pp. 20-32.

Southdown, Inc., 1991. *Site Assessment of Southwestern Portland Cement Properties Near Fairborn, Ohio: Phase 1, Preliminary Investigations, Part 1.* Prepared by Panterra Corporation. March 11, 1991.

Southdown, Inc., 1992. *Subarea 1 Site Evaluation, Southwestern Portland Cement Company, Fairborn, Ohio.* Prepared by Ground Water Associates, Inc, April, 1992.

Standard Concrete Material, Inc. 1983. *Cement Composition as Substitute for Portland Cement Containing Blast Furnace Slag, Cement Kiln Dust, and/or Calcium Carbonate, and Optionally Gypsum.* PCT Patent Application Number WO--83-01443. April 28.

Stanley, D. 1988. *Florida Mining Proposes Waste-Burning Cement Plan.* Tampa Tribune. September 15, p. D1.

State of Mississippi, 1992. Permit for stormwater runoff for Holnam, Inc., Artesia, Mississippi; NPDES Permit No. MSR320017.

Steuch, Hans E. 1992. *Review of Dust Return Systems.* Paper presented at the Portland Cement Association Seminar on Emerging Technologies for Kiln Dust Management. March 4. Chicago, Illinois. p. 2.

Supplementing Ruminant Feeds with Cement Kiln Dust Improves Livestock Performance, According to Agriculture Canada. Feedstuffs. June 2, 1980, p. 38.

Taylor, H.F.W., 1990. *Cement Chemistry*, Academic Press Inc., San Diego, California.

"Test Methods for the Evaluation of Solid Waste, Physical/Chemical Analysis."

Tex. Admin. Code tit. 31, § 101.1.

Tex. Admin. Code tit. 31, § 101.6.

Tex. Admin. Code tit. 31, § 111.111.

Tex. Admin. Code tit. 31, § 111.155.

Tex. Admin. Code tit. 31, § 307.7.

Tex. Admin. Code tit. 31, § 335.1.

Tex. Admin. Code tit. 31, § 335.2(d).

Tex. Health and Safety Code § 1.05.

Tex. Health and Safety Code § 361.

Texas Industries, Inc., 1992. *Part B Permit Application to EPA and the Texas Water Commission*. Prepared by Entellect Environmental Services for Texas Industries, Inc. p. 1-9.

Texas Water Commission, 1990. RCRA Facility Assessment Facility Checklist for Texas Industries, Incorporated, Peter F. Lodde, reviewer.

Texas Water Commission, 1991. Letter from Allen Hayes, Environmental Quality Specialist, to files regarding a review of laboratory analyses of samples collected on October 21 and 22, 1991, from North Texas Cement Co., Texas Industries, Inc., and Box Crow Cement Co. November 18, 1991.

Texas Water Commission, 1992. Interoffice memorandum from Sam Barrett, Field Investigator to files regarding record review of analytical results of samples collected from Texas Industries, Inc. during inspections on January 27, 1992, March 10, 1992, and April 10, 1992. October 21, 1992.

Texas Water Commission, 1992. Interoffice communication from Sam Barrett, Field Investigator, to files regarding compliance inspection at Texas Industries, Inc., Midlothian, Texas. February, 1992.

Texas Water Commission, 1992. Letter from Mary B. Adrian, Section Leader, Enforcement Section, TWC, to E.L. Faciane, Staff Vice-President, Environmental Affairs, Texas Industries, p.3. April 15, 1992.

Thorsen, J.W., *et al.*, 1983. *In Situ Stabilization and Closure of an Oily Sludge Lagoon*. 3rd Ohio Environmental Conference. March. Columbus, Ohio.

Tidona, R.J., et. al. 1983. *Project Summary: Evaluation of Combustion Variable Effects on NOx Emissions from Mineral Kilns.* U.S. Environmental Protection Agency. November.

Todres, H., A. Mishulovich, and J. Ahmed, 1992. *Cement Kiln Dust Management: Permeability*. Research and Development Bulletin RD103T, Portland Cement Association, Skokie, Illinois, p.7.

U.S. Bankruptcy Court, Southern District of New York, 1991. *Proof of Claim of the State of Utah Department of Environmental Quality*, Case No. 90-B-21277, in reference to New York Trap Rock Corporation, Lone Star Industries, Inc. *et.al.*, Debtors.

U.S. Department of Agriculture. 1979. Letter from William E. Wheeler, Research Animal Scientist, Nutrition, to John P. Lehman, Hazardous Waste Management Division, Office of Solid Waste, U.S. EPA. February 23.

U.S. Department of Commerce, Date Unknown. *Construction Materials Database*, Building Materials and Construction Division, Office of Forest Products and Domestic Construction, International Trade Administration, Washington, D.C.

U.S. Department of Commerce, 1991. Cement Industry, *U.S. Industrial Outlook 1991*, Washington, D.C.

U.S. Department of Commerce, International Trade Administration. 1987. *A Competitive Assessment of the U.S. Cement Industry.* July 1.

U.S. Department of Energy. 1983. *Use of Solid Waste Material as a Raw Material in a Cement Process, Final Report.* December 31.

U.S. Department of Energy. 1989. *Health Assessment for Portland Cement Company, Waste Cement Kiln Dust Sites 2 & 3, Salt Lake City, Utah.* February 28.

U.S. Department of Energy, Energy Efficiency Office. 1988. *Energy Efficient Demonstration Scheme, Refuse Burning in Cement Kilns, Demonstration at Blue Circle Westbury Works.* February.

U.S. Department of Health and Human Services, 1991. *Health Assessment for Northwestern States Portland Cement Company, Mason City, Cerro Gordo County, Iowa*. December, 1991.

U.S. Department of the Interior, Bureau of Mines. 1985. *Cement, A Chapter from Minerals Facts and Problems 1985 Edition.*

U.S. Department of the Interior, Bureau of Mines. 1987. *Cement.*

U.S. Department of Interior, Bureau of Mines. 1990. *Minerals Yearbook.*

U.S. Department of Transportation and U.S. Department of Energy. 1982. *Kiln Dust-Fly Ash Systems for Highway Bases and Subbases.* October 1.

U.S. Environmental Protection Agency, 1988. *Final Report Site Investigation: Lehigh Portland Cement Company, Mason City, Iowa*. Prepared by Ecology and Environment Field Investigation Team for Region VII. March, 1988.

U.S. Environmental Protection Agency, 1989. Exposure Factors Handbook. Office of Health and Environmental Assessment. EPA/600/8-89/043.

U.S. Environmental Protection Agency, 1989. Risk Assessment Guidance for Superfund Volume I: Human Health Evaluation Manual (Part A). Office of Emergency and Remedial Response. EPA/540/1-89/002.

U.S. Environmental Protection Agency, 1990. *Commercial Combustion Capacity for Hazardous Waste Sludges and Solids*, Office of Solid Waste, Washington, D.C. August 1990.

U.S. Environmental Protection Agency, 1990. *Report to Congress on Special Wastes from Mineral Processing*, Volume II, Methods and Analyses, Office of Solid Waste, July.

U.S. Environmental Protection Agency, 1991. "A PC Software Application of the Uptake/Biokinetic Model, Version 0.5," Office of Health and Environmental Assessment (ECAO-CIN-2178A).

U.S. Environmental Protetion Agency, 1991. Human Health Evaluation Manual, Supplemental Guidance: Standard Default Exposure Factors. Office of Emergency and Remedial Response. OSWER Directive: 9285.6-03.

U.S. Environmental Protection Agency, 1991. Record of Decision: Lehigh Portland Cement, Mason City, Iowa. Prepared by the Office of Emergency and Remedial Response. June, 1991.

U.S. Environmental Protection Agency, 1992. Guidance on Risk Characterization for Risk Managers and Risk Assessors.

U.S. Environmental Protection Agency, 1992. Sampling Trip Reports.

U.S. Environmental Protection Agency, 1993. Unpublished field notes collected during visit to Holnam, Inc., Artesia, Mississippi, May 25, 1993.

U.S. Environmental Protection Agency, 1993. *Water Systems Byproducts Treatment and Disposal Cost Document (Final Draft)*. April.

U.S. Environmental Protection Agency, 1989. *Superfund Record of Decision (EPA Region 7): John's Sludge Pond, Wichita, KS, (First Remedial Action)*. Office of Emergency and Remedial Response. Washington, DC. September 22.

U.S. Environmental Protection Agency, 1992. MMSOILS: Multimedia Contaminant Fate, Transport, and Exposure Model, Documentation and User's Manual. Office of Research and Development. September 1992. (updated in April 1993).

U.S. Environmental Protection Agency, 1990. *Summary of Industrial Processes, Products, Wastes Generated and Regulation of the Cement Kiln Industry.* Office of Solid Waste, December 14.

U.S. Environmental Protection Agency, Region VI, 1992. *Complaint, Compliance Order, and Notice of Opportunity for Hearing in the Matter of Texas Industries, Inc., Midlothian, Texas.* Dockett No. RCRA VI-203-H, Hazardous Waste Management Division. September, 1992.

U.S. Environmental Protection Agency, Region VIII, and Utah Department of Health and Environmental Quality, 1990. *Declaration for the Record of Decision, Portland Cement Company (Kiln Dust #2 & #3), Operable Unit 1, Salt Lake City, Utah.* July, 1990.

U.S. International Trade Commission. 1990. *Gray Portland Cement and Clinker from Mexico.* August.

U.S. International Trade Commission. 1991. *Gray Portland Cement and Clinker from Japan.* April.

University of Iowa, 1984. *Calmus Creek Water Quality Study.* Report 85-1.

Valley Forge Laboratories, Inc. 1982. *Kiln Dust-Fly Ash Systems for Highway Bases and Subbases.* U.S. Department of Transportation and U.S. Department of Energy. September.

Veltmann, J.R. and L.S. Jensen. 1979. *Effect of Georgia Cement Kiln Dust on Broiler Chick Performance.* Poultry Science. Volume 58. p. 1027.

Ward, G.M., C.A. Olds, D.D. Caveny, and G.A. Greathouse. 1979. *Cement Kiln Dust in Finishing Lamb Diets.* Journal of Animal Science. September. Volume 49. p. 637.

Weitzenkamp. 1988. *Utilization of Waste Heat from a Cement Production Rotary Kiln for Heating and Domestic Water Supply of Buildings.* Interatom. May 26.

Wheeler, W.E. 1978. *Cement Kiln Dust: A Potential Feed Ingredient for Livestock.* Cereal Foods World. Volume 23. pp. 296-297, 299, 312.

Wheeler, W.E. 1981. *Variability in Response by Beef Steers to Cement Kiln Dust in High Concentrate Diets.* Journal of Animal Science. March. Volume 52. pp. 618-627.

Wheeler, W.E. and R.R. Oltjen. 1979. *Cement Kiln Dust in Complete Diets for Finishing Steers and Growing Lambs.* Journal of Animal Science. March. Volume 48. pp. 658-665.

Willey, C.R. and C.S. Weinberger. 1985. *Demonstration Test of Refuse Derived Fuel as a Supplement Fuel in Cement Kilns.* Ohio Environmental Protection Agency. April.

Wilson, R.D. and W.E. Anable. 1986. *Removal of Alkalies From Portland Cement Kiln Dust.* U.S. Department of Interior, Bureau of Mines Report of Investigations Number 9032. p. 2.

Z.A. and M.A. Rahman. 1990. *Potential of Cement Kiln Dust for the Stabilization of Dune Sand in Highway Construction*. Building and Environment. Volume 25, Number 4. pp. 285-289.

Zarlinski, S.J. and J.C. Evans, 1990. *Durability Testing of a Stabilized Petroleum Sludge*. Paper from Hazardous and Industrial Wastes, Proceedings of 22nd Mid-Atlantic Industrial Waste Conference. July 24-27. Pennsylvania.

Zier, Robert E. and Elizabeth Wood. 1991. *Sludge: Sludge Solutions*. Waste Information Digests. May.

Zinn, R.A., R.A. Lovell, D.R. Gill, F.N. Owens, and K.B. Poling. 1979. *Influence of Cement Kiln Dust on Animal Performance and Nutrient Availability*. Journal of Animal Science. Volume 49. p. 422.

17 CCR § 70200.

25 Pa. Code § 16.

25 Pa. Code § 93.6.

25 Pa. Code § 123.1.

25 Pa. Code § 123.13.

25 Pa. Code § 123.41.

25 Pa. Code §§ 127.61-127.73.

25 Pa. Code § 287.1.

25 Pa. Code § 287.101.

25 Pa. Code §§ 287.121-287.134.

25 Pa. Code § 287.411.

25 Pa. Code § 287.421.

25 Pa. Code § 287.611.

33 U.S.C. §§ 1251-1387.

35 Penn. Stat. Ann. § 6018.102 and 25 Pa. Code § 287.

35 Penn. Stat. §§ 6018.602-6018.606.

35 Pa. Stat. § 4004.

35 Pa. Stat. § 691.

40 CFR § 60.60.

40 CFR § 122.26.

40 CFR § 257.2.

40 CFR § 260.10.

40 CFR § 266.31(c).

40 CFR Part 50.

40 CFR Part 257.

42 U.S.C. § 300h-7(e).

42 U.S.C. § 6924(q)(2)(C).

42 U.S.C. § 6944.

42 U.S.C. § 6944(a).

42 U.S.C. § 6973.

42 U.S.C. § 7410.

42 U.S.C. § 7411.

42 U.S.C. § 9604.

42 U.S.C. §§ 300f-300j.

42 U.S.C. §§ 6901 to 6992K.

42 U.S.C. §§ 6942 - 6949a.

42 U.S.C. §§ 7401-7671q.

56 Fed. Reg. 7134.

57 Fed. Reg. 41236.