United States
Environmental Protection
Agency

Industrial Environmental Research
Laboratory
Research Triangle Park NC 27711

EPA-600/7-78-202
October 1978

EPA

Environmental Assessment: Source Test and Evaluation Report--Chapman Low-Btu Gasification

Interagency Energy/Environment R&D Program Report

RESEARCH REPORTING SERIES

Research reports of the Office of Research and Development, U.S. Environmental Protection Agency, have been grouped into nine series. These nine broad categories were established to facilitate further development and application of environmental technology. Elimination of traditional grouping was consciously planned to foster technology transfer and a maximum interface in related fields. The nine series are:

1. Environmental Health Effects Research
2. Environmental Protection Technology
3. Ecological Research
4. Environmental Monitoring
5. Socioeconomic Environmental Studies
6. Scientific and Technical Assessment Reports (STAR)
7. Interagency Energy-Environment Research and Development
8. "Special" Reports
9. Miscellaneous Reports

This report has been assigned to the INTERAGENCY ENERGY-ENVIRONMENT RESEARCH AND DEVELOPMENT series. Reports in this series result from the effort funded under the 17-agency Federal Energy/Environment Research and Development Program. These studies relate to EPA's mission to protect the public health and welfare from adverse effects of pollutants associated with energy systems. The goal of the Program is to assure the rapid development of domestic energy supplies in an environmentally-compatible manner by providing the necessary environmental data and control technology. Investigations include analyses of the transport of energy-related pollutants and their health and ecological effects; assessments of, and development of, control technologies for energy systems; and integrated assessments of a wide range of energy-related environmental issues.

EPA REVIEW NOTICE

This report has been reviewed by the participating Federal Agencies, and approved for publication. Approval does not signify that the contents necessarily reflect the views and policies of the Government, nor does mention of trade names or commercial products constitute endorsement or recommendation for use.

This document is available to the public through the National Technical Information Service, Springfield, Virginia 22161.

EPA-600/7-78-202

October 1978

Environmental Assessment: Source Test and Evaluation Report--Chapman Low-Btu Gasification

by

Gordon C. Page (Program Manager)

Radian Corporation
P.O. Box 9948
Austin, Texas 78766

Contract No. 68-02-2147
Exhibit A
Program Element No. EHE623A

EPA Project Officer: William J. Rhodes

Industrial Environmental Research Laboratory
Office of Energy, Minerals, and Industry
Research Triangle Park, NC 27711

Prepared for

U.S. ENVIRONMENTAL PROTECTION AGENCY
Office of Research and Development
Washington, DC 20460

ABSTRACT

This report presents the results of a Source Test and Evaluation program conducted at a commercial Chapman low-Btu gasification facility. The specific objectives were to: characterize the waste streams and potential fugitive emission and effluent streams from the facility, evaluate the applicability of Level 1 sampling and analytical methodology to such a characterization, and evaluate the particulate removal efficiency of the product gas cyclone. All objectives were met. It was found that Level 1 methodologies required some degree of modification in order to meet the program objectives. Overall results from the chemical and bioassay testing indicated that all waste and process streams examined contain potentially harmful organic and/or inorganic materials. In the coal feeder vent gases, examples of potentially harmful species include polycyclic aromatic hydrocarbons (PAH's), CO and Cr. The potentially harmful species found in the separator vent gases included PAH's, amines, CO, NH_3, C_2-hydrocarbons, heterocylic nitrogen compounds, Cr, V and Ag. A variety of trace elements in the gasifier ash and cyclone dust were found at potentially harmful levels. These elements included Be, P, Fe, Ca, Al, Li, Ba, Se, Pb, Cu, Ti, Cd, Sb, V, Co, U, and Cs. The product gas cyclone was found to be approximately 60 percent effective in removing particulate matter from the raw product gas stream.

TABLE OF CONTENTS

Abstract ii

Figures viii

Tables x

Acknowledgements xiv

1.0 INTRODUCTION 1

1.1 PROGRAM SUMMARY 1

1.1.1 Plant Description 3

1.1.2 Test Program Description 5

1.2 CONCLUSIONS 8

1.2.1 Waste and Process Stream Characterization 8

1.2.2 Evaluation of Level 1 Methodology 12

1.3 RESULTS OF THE SOURCE TEST EVALUATION 15

1.3.1 Total Plant 17

1.3.2 Gaseous Waste Streams 17

1.3.3 Solid Waste Streams 24

1.3.4 Potential Fugitive Emissions and Effluents 26

1.3.5 Summary of Cyclone Particulate Removal Efficiency Test 31

1.4 RECOMMENDATIONS..... 31

1.4.1 Future Data Needs 33

1.4.2 Methodologies Used 33

CONTENTS (Continued)

2.0 PLANT DESCRIPTION 39

2.1 PROCESS DESCRIPTION 39

2.1.1 Coal Handling 39

2.1.2 Gasification 41

2.1.3 Gas Purification 41

2.1.4 Water Treatment 43

2.1.5 Waste Stream Summary 43

2.2 PLANT OPERATION 45

2.3 PROCESS FLOW RATE AND MASS BALANCE DETERMINATIONS 45

3.0 SAMPLING METHODOLOGY 49

3.1 DESCRIPTION OF SAMPLING POINTS 49

3.1.1 Coal Feedstock (1) 49

3.1.2 Coal Feeder Vent (2) 51

3.1.3 Gasifier Ash (3) 51

3.1.4 Separator Vent Gas (4) 51

3.1.5 Cyclone Dust (5) 52

3.1.6 Raw Product Gas (10) 52

3.1.7 Clean Product Gas (8) 52

3.1.8 Separator Liquor (6) 52

3.1.9 Tars and Oils (7) 54

3.1.10 Cyclone Inlet and Outlet (9, 10) ... 54

CONTENTS (Continued)

3.2 SAMPLING METHODOLOGY 54

3.2.1 Waste Stream and Potential Fugitive Emission and Effluent Characterizations 56

3.2.2 Cyclone Particulate Removal Efficiency Study 66

3.2.3 Samples for Additional Characteristics 70

4.0 ANALYTICAL PROCEDURES 72

4.1 INORGANIC SPECIES ANALYSIS 80

4.1.1 Gas Phase Analytical Procedures 80

4.1.2 Aqueous Media Analytical Procedures .. 85

4.1.3 Analyses of Solids Samples 94

4.1.4 Analyses for Trace Elements 94

4.2 ORGANIC SPECIES ANALYSIS 96

4.2.1 Gaseous Hydrocarbon Species Analyses . 98

4.2.2 Organic Extraction Procedures 99

4.2.3 Preparation and Analysis Methods 100

4.3 BIOASSAY ANALYSIS 104

4.3.1 Ames Test 105

4.3.2 Cytotoxicity Tests 106

4.3.3 Rodent Acute Toxicity Test 107

4.3.4 Fresh Water Tests 108

4.3.5 Salt Water Tests 108

CONTENTS (Continued)

4.3.6 Soil Microcosm Test 109

4.3.7 Plant Stress Ethylene Test 109

5.0 TEST RESULTS 110

5.1 METHODOLOGIES 110

5.1.1 SAM/1A Methodology 110

5.1.2 Bioassay Test Analysis 111

5.2 RESULTS 112

5.2.1 Total Plant 112

5.2.2 Gaseous Waste Streams 115

5.2.3 Solid Waste Streams 124

5.2.4 Potential Fugitive Emissions and Effluents 136

5.2.5 Summary of Cyclone Particulate Removal Efficiency Test 147

5.2.6 Additional Results 147

6.0 CONCLUSIONS AND RECOMMENDATIONS..... 153

6.1 WASTE AND PROCESS STREAMS 153

6.1.1 Gaseous Waste Streams 153

6.1.2 Solid Waste Streams 158

6.1.3 Potential Fugitive Emissions 159

6.1.4 Potential Fugitive Effluents 160

CONTENTS (Continued)

6.2 LEVEL 1 METHODOLOGY 161

6.2.1 Sampling Methodology 161

6.2.2 Analytical Methodology 164

REFERENCES 168

APPENDIX - BIOASSAY, INFRARED SPECTROPHOTOMETRY, LIQUID CHROMATOGRAPHY AND LOW RESOLUTION MASS SPECTROMETRY DATA FOR A CHAPMAN GASIFICATION FACILITY 169

FIGURES

Number		Page
1-1	SCHEMATIC FLOW DIAGRAM OF A CHAPMAN LOW-BTU GASIFICATION FACILITY	4
1-2	COMPARISON OF PARTICULATE TRAIN AND ORGANIC MODULE SAMPLES - COAL FEEDER VENT GAS	21
2-1	SIMPLIFIED PROCESS FLOW DIAGRAM FOR THE CHAPMAN FACILITY SHOWING EMISSIONS STREAMS	40
3-1	SIMPLIFIED PROCESS FLOW DIAGRAM FOR THE CHAPMAN FACILITY SHOWING WASTE AND PROCESS STREAMS AND SAMPLING POINTS	50
3-2	SCHEMATIC DIAGRAM OF SAMPLING ARRANGEMENT USED ON THE OUTLET OF THE CYCLONE	53
3-3	SCHEMATIC DIAGRAM OF CYCLONE INLET SAMPLE POINT.	55
3-4	SOURCE ASSESSMENT SAMPLING SCHEMATIC	58
3-5	GRAB SAMPLE COLLECTION AND PREPARATION SYSTEM	62
3-6	SCHEMATIC OF THE EPA METHOD 5 SAMPLING TRAIN	64
3-7	SCHEMATIC DIAGRAM OF PARTICULATE SAMPLING TRAIN USED AT THE CYCLONE	67
3-8	SCHEMATIC DIAGRAM OF SAMPLING ARRANGEMENT USED ON THE INLET OF THE CYCLONE	68
3-9	VELOCITY PROFILE AT THE INLET AND OUTLET OF THE CYCLONE	69
4-1	ANALYTICAL FLOW SCHEME FOR COAL FEEDER VENT GASES	74
4-2	ANALYTICAL FLOW SCHEME FOR SEPARATOR VENT GASES.	75
4-3	ANALYTICAL FLOW SCHEME FOR CYCLONE DUST AND GASIFIER ASH	76

FIGURES (Continued)

4-4 ANALYTICAL FLOW SCHEME FOR SEPARATOR TAR 77

4-5 ANALYTICAL FLOW SCHEME FOR SEPARATOR LIQUOR 78

4-6 ANALYTICAL FLOW SCHEME FOR PRODUCT GAS SAMPLES .. 79

5-1 COMPARISON OF PARTICULATE TRAIN AND ORGANIC MODULE SAMPLES FOR COAL FEEDER VENT GASES 116

TABLES

Number		Page
1-1	MULTIMEDIA WASTE STREAMS AT THE CHAPMAN FACILITY ..	7
1-2	PROCESS STREAMS IDENTIFIED AS POTENTIAL SOURCES OF FUGITIVE EMISSIONS AND EFFLUENTS	7
1-3	CHARACTERISTICS OF WASTE STREAMS AND POTENTIAL FUGITIVE EMISSIONS AND EFFLUENTS FROM THE CHAPMAN FACILITY	9
1-4	CONCLUSIONS FROM EVALUATION OF LEVEL 1 SAMPLING METHODOLOGY DURING THE TEST PROGRAM AT THE CHAPMAN FACILITY	14
1-5	CONCLUSIONS FROM EVALUATION OF LEVEL 1 ANALYTICAL METHODOLOGY DURING THE TEST PROGRAM AT THE CHAPMAN FACILITY	16
1-6	MASS BALANCE AROUND THE CHAPMAN FACILITY	18
1-7	SUMMARY OF SAM/1A AND BIOASSAY TEST RESULTS FOR TOTAL PLANT WASTE STREAMS AND POTENTIAL FUGITIVE EMISSIONS AND EFFLUENTS	19
1-8	SUMMARY OF LEVEL 1 CHEMICAL AND BIOASSAY TEST RESULTS FOR COAL FEEDER VENT GASES	22
1-9	SUMMARY OF LEVEL 1 CHEMICAL AND BIOASSAY TEST RESULTS FOR SEPARATOR VENT GASES	23
1-10	SUMMARY OF LEVEL 1 CHEMICAL AND BIOASSAY TEST RESULTS FOR GASIFIER ASH	25
1-11	SUMMARY OF LEVEL 1 CHEMICAL AND BIOASSAY TEST RESULTS FOR CYCLONE DUST	27
1-12	SUMMARY OF DEGREE OF HAZARD VALUES FOR MEG CATEGORIES ESTIMATED TO BE IN THE RAW PRODUCT GAS STREAM	29
1-13	SUMMARY OF LEVEL 1 CHEMICAL AND BIOASSAY TEST RESULTS FOR SEPARATOR LIQUOR	30

TABLES (Continued)

1-14 SUMMARY OF LEVEL 1 CHEMICAL AND BIOASSAY TEST RESULTS FOR BY-PRODUCT TAR 32

1-15 RECOMMENDATIONS FOR FUTURE DATA NEEDS FOR WASTE STREAMS 34

1-16 RECOMMENDATIONS FOR FUTURE DATA NEEDS FOR POTENTIAL FUGITIVE EMISSIONS AND EFFLUENTS 35

2-1 WASTE STREAMS AT THE CHAPMAN FACILITY 44

2-2 SUMMARY OF PROCESS STREAMS IDENTIFIED AS POTENTIAL SOURCES OF FUGITIVE EMISSIONS AND EFFLUENTS 44

2-3 MASS BALANCE AROUND THE CHAPMAN GASIFICATION FACILITY 47

3-1 SAMPLING AND ON-SITE ANALYSIS SCHEDULE - CHAPMAN GASIFIER SOURCE TEST EVALUATION PROGRAM 57

4-1 SUMMARY OF ANALYSES PERFORMED 73

4-2 AQUEOUS PHASE ANALYSES BY STREAM..... 86

4-3 WATER QUALITY ANALYSES ON SEPARATOR VENT GAS CONDENSATE 87

4-4 WATER QUALITY ANALYSES ON SEPARATOR LIQUOR 89

4-5 SAMPLES ANALYZED FOR TRACE ELEMENT COMPOSITION ... 95

4-6 STREAMS SAMPLED FOR ORGANIC SPECIES ANALYSES 97

5-1 MASS BALANCE AROUND THE CHAPMAN GASIFICATION FACILITY 113

5-2 SUMMARY OF SAM/1A AND BIOASSAY TEST RESULTS FOR TOTAL PLANT WASTE STREAMS AND POTENTIAL FUGITIVE EMISSIONS AND EFFLUENTS 114

5-3 SUMMARY OF LEVEL 1 CHEMICAL AND BIOASSAY TEST RESULTS FOR COAL FEEDER VENT GASES 117

5-4 SUMMARY OF TEST RESULTS - COAL FEEDER VENT GASES . 119

TABLES (Continued)

5-5 SUMMARY OF LEVEL 1 CHEMICAL AND BIOASSAY TEST RESULTS FOR SEPARATOR VENT GASES 123

5-6 SUMMARY OF TEST RESULTS - SEPARATOR VENT GASES 125

5-7 SUMMARY OF LEVEL 1 CHEMICAL AND BIOASSAY TEST RESULTS FOR GASIFIER ASH 129

5-8 SUMMARY OF TEST RESULTS - GASIFIER ASH 131

5-9 SUMMARY OF LEVEL 1 CHEMICAL AND BIOASSAY TEST RESULTS FOR CYCLONE DUST 133

5-10 SUMMARY OF TEST RESULTS - CYCLONE DUST 134

5-11 SUMMARY OF DEGREE OF HAZARD VALUES FOR MEG CATEGORIES ESTIMATED TO BE IN THE RAW PRODUCT GAS STREAM 137

5-12 SUMMARY OF THE LEVEL 1 CHEMICAL AND BIOASSAY TEST RESULTS FOR THE SEPARATOR LIQUOR 138

5-13 SUMMARY OF TEST RESULTS - SEPARATOR LIQUOR 140

5-14 SUMMARY OF LEVEL 1 CHEMICAL AND BIOASSAY TEST RESULTS FOR BY-PRODUCT TAR 143

5-15 SUMMARY OF TEST RESULTS - SEPARATOR TAR 144

5-16 PARTICULATE LOADINGS IN THE PRODUCT LOW-BTU GAS ENTERING AND EXITING THE HOT CYCLONE 147

5-17 SUMMARY OF ADDITIONAL WATER QUALITY PARAMETERS FOR THE SEPARATOR LIQUOR AND SASS TRAIN CONDENSATE FROM THE SEPARATOR VENT 149

5-18 PROXIMATE AND ULTIMATE ANALYSES RESULTS FOR THE COAL FEED, GASIFIER ASH, CYCLONE DUST AND AND BY-PRODUCT TAR 150

5-19 RESULTS FOR GASEOUS SPECIES IN THE RAW AND CLEAN PRODUCT GAS 151

TABLES (Continued)

6-1 CHARACTERISTICS OF WASTE STREAMS AND POTENTIAL FUGITIVE EMISSIONS AND EFFLUENTS FROM THE CHAPMAN FACILITY 154

6-2 RECOMMENDATIONS FOR FUTURE DATA NEEDS FOR WASTE STREAMS 156

6-3 RECOMMENDATIONS FOR FUTURE DATA NEEDS FOR POTENTIAL FUGITIVE EMISSIONS AND EFFLUENTS 157

6-4 CONCLUSIONS FROM EVALUATION OF LEVEL 1 SAMPLING METHODOLOGY DURING THE TEST PROGRAM AT A CHAPMAN FACILITY 162

6-5 CONCLUSIONS FROM EVALUATION OF LEVEL 1 ANALYTICAL METHODOLOGY DURING THE TEST PROGRAM AT THE CHAPMAN FACILITY 166

ACKNOWLEDGEMENTS

The following personnel are acknowledged for their contributions during the preparation of this report: J. M. Harless, M. P. Kilpatrick, W. C. Thomas, R. V. Collins, W. E. Corbett, K. J. Bombaugh, B. J. Bolding, L. A. Rohlack, C. E. Hudak, K. A. Swenson, and G. C. Page.

Guidance and review by W. J. Rhodes and T. K. Janes of EPA/IERL-RTP also aided significantly in the successful completion of this source test and evaluation program.

SECTION 1.0

INTRODUCTION

Radian Corporation of Austin, Texas, under a 3-year contract to the Environmental Protection Agency (EPA) is performing a comprehensive environmental assessment (EA) of low-Btu gasification technology. A major portion of this assessment involves source test and evaluation (STE) programs at operating low-Btu gasification facilities. The ultimate objective of each STE program is the attainment of necessary data for evaluation of: (1) environmental and health effects of multimedia waste streams from low-Btu gasification facilities, and (2) equipment required for control of problem waste streams.

1.1 PROGRAM SUMMARY

EPA has developed methodologies for assessment of potential health and ecological effects of multimedia waste streams emitted to the environment. Radian applied these methodologies in an STE program for assessment of multimedia waste streams from a facility having a Chapman low-Btu gasifier. The results, conclusions, and recommendations are presented in this report.

In the Chapman gasifier, coal is reacted with steam and oxygen (air) in a single-stage, fixed-bed, atmospheric pressure vessel. In the Chapman facility tested, the raw, low-Btu gas is treated in cyclones and direct contact quench/coolers to remove particulate matter, tars and oils.

The Chapman facility was selected for STE for the following reasons.

- It is an operating commercial gasifier to which access could be gained.
- It has a well-defined operating history.

- Its single-stage, fixed-bed, atmospheric pressure gasifiers are representative of gasifiers currently in commercial use in this country.
- It uses bituminous coal, a widely available feedstock.
- It is equipped with a gas quenching and scrubbing system that provides a means of evaluating tar and oil by-products associated with a gas quenching operation.
- It provides an opportunity to obtain particle removal efficiency data for a hot cyclone.

The specific objectives of the STE program conducted at this Chapman facility were to:

- characterize the multimedia waste streams leaving the facility, using Level 1 sampling and analytical methodologies (Ref. 1),
- characterize the process streams in the facility which represent potential sources of fugitive emissions and effluents using Level 1 sampling and analytical methodologies,
- evaluate the particulate removal efficiency of the product gas cyclone, and
- evaluate the applicability of Level 1 sampling and analytical methodologies to multimedia waste and process streams in low-Btu gasification facilities.

All objectives were met. Overall results from chemical and biological testing indicate that all waste and process streams examined contain potentially hazardous organic and/or inorganic materials. The results generally were confirmed by bioassay screening tests.

The product gas cyclone was found to be approximately 60 percent efficient in removing particulate matter (coal dust, ash and tar) from the raw product gas stream.

During this program it was found that modifications to Level 1 methodologies were required to achieve the program's objectives. With these modifications, Level 1 methodology can be considered effective for screening potentially hazardous waste streams associated with low-Btu gasification facilities.

1.1.1 Plant Description

The Chapman facility under examination produces a low-Btu gas which is used as combustion fuel for process heaters. The facility is equipped with 12 operational Chapman gasifiers. However, current fuel demands are low and can be met by operating only two gasifiers at any specific time.

A block flow diagram of the Chapman facility is given in Figure 1-1. Major multimedia waste streams and feed streams are indicated in the figure.

Three operations are conducted at the Chapman facility: coal handling, gasification, and gas purification (particulate removal and gas quenching and scrubbing). The operations consist of one or more discrete steps, as follows.

- Coal handling - consists of delivery and storage of presized Virginia bituminous coal in hopper cars, along with conveying and storing this coal in the gasifier feed hoppers.

- Coal gasification - consists of producing raw, low-Btu gas from coal using fixed-bed, atmospheric pressure, single-stage Chapman gasifiers. The coal enters the gasifier through a rotating feeder (barrel valve) and is spread across the bed by a distribution arm. The coal is then reacted with a steam/air mixture to produce a hot (840-950°K, 1050-1250°F) low-Btu gas. Ash is collected in a water-sealed ash pan and removed by an ash plow. Pokeholes located on top of the gasifier are opened periodically to permit the insertion of rods to break up any coal agglomerates that form in the gasifier.

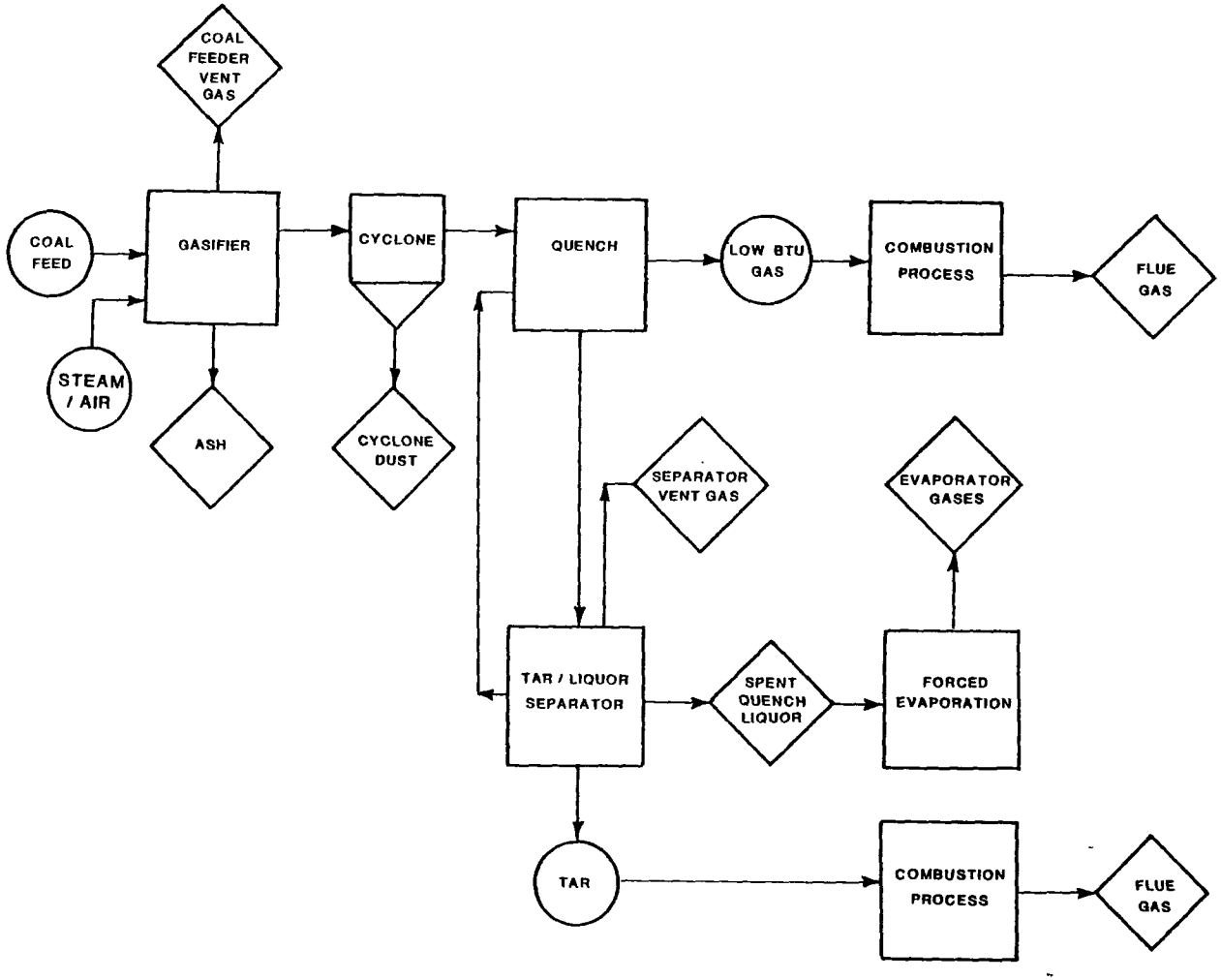

Figure 1-1. SCHEMATIC FLOW DIAGRAM OF A CHAPMAN LOW-BTU GASIFICATION FACILITY

- Gas purification -

  - Particulate removal - consists of cyclone removal of particulate matter from the hot, low-Btu gas. The particulate matter consists of devolatilized coal particles, tar, and ash.

  - Gas quenching and scrubbing - consists of removing tars and oils from the hot gas and cooling the gas to 320°K (120°F) using in-line sprays followed by two tray scrubbers and a spray scrubber. Tar-laden quench liquor is sent to a tar/liquor separator where the tars settle to the bottom. The tars are removed periodically and used as an auxiliary fuel in a coal-fired boiler. The quench liquor is cooled and recycled to the gas quenching and scrubbing processes. Accumulated quench liquor is sent to a forced evaporator for treatment. Ideally, water problems are minimized by operating the gasifier such that there is no net accumulation of water in the process.

1.1.2 Test Program Description

In order to meet the objectives of this STE program, as outlined in Section 1.0, a number of operating parameters were examined. These included:

- process flow rate/mass balance,
- character of waste streams,
- character of potential fugitive emissions, and
- cyclone particulate removal efficiency.

In addition, the effectiveness of Level 1 methodologies was monitored closely. These efforts are summarized briefly in the following paragraphs.

Process Flow Rate/Mass Balance Determinations -

During the program, process flow rates were determined for:

- coal feedstock,
- gasifier ash,
- product gas,
- cyclone dust, and
- tars and oils.

A mass balance around the facility during the test period was calculated from these data.

Waste Stream Characterizations -

The waste streams from the Chapman facility are listed in Table 1-1. The streams sampled and analyzed by Radian are indicated with an asterisk. Criteria for selection of streams for sampling included accessibility, plant operation and potential for pollution. For example, process heater flue gas was not sampled because the heater was located in a restricted area. Evaporator vapors were not sampled because no spent quench liquor was sent to the evaporator during the test.

Table 1-1. MULTIMEDIA WASTE STREAMS AT THE CHAPMAN FACILITY

Gaseous Emissions
- Coal Feeder Vent Gases*
- Pokehole Gases
- Separator Vent Gases*
- Evaporator Vapors
- Process Heater Flue Gas
- Tar/coal Combustor Flue Gas
Liquid Effluents
- Spent Quench Liquor
Solid Wastes
- Gasifier Ash*
- Cyclone Dust *

* Indicates the waste streams sampled during the test program.

Potential Fugitive Emissions and Effluents Characterizations -

The process streams in the Chapman facility are listed in Table 1-2. These streams, identified as potential sources of fugitive emissions and effluents, were sampled and analyzed as part of Radian's test. The data collected from the quench liquor and by-product tar is also valuable as an aid to the prediction of control technology and end-use requirements for similar streams in future facilities.

Table 1-2. PROCESS STREAMS IDENTIFIED AS POTENTIAL SOURCES OF FUGITIVE EMISSIONS AND EFFLUENTS

Gaseous Stream
- Raw Product Gas
Liquid Stream
- Recirculating Quench Liquor
Solid Stream
- By-Product Tar

Cyclone Particulate Removal Efficiency Study -

The particulate removal efficiency of the cyclone in the raw product gas stream was also studied during this test. Particulate concentrations were measured in the product gas stream before and after the cyclone, and the removal efficiency was determined.

Level 1 Methods Evaluation -

During both the sampling and analysis phases of this test, the performance of the Level 1 procedures was closely monitored. At the termination of the test, the applicability of the various procedures to coal gasification facilities and samples was evaluated.

1.2 CONCLUSIONS

The conclusions drawn from the results of the STE program conducted at the Chapman facility fall into two categories: those resulting from the characterization of waste and process streams, and those resulting from the evaluation of Level 1 methodology.

1.2.1 Waste and Process Stream Characterization

An overall summary of the character of the waste and process streams at the Chapman facility is presented in Table 1-3. As indicated in this table, all of the streams tested contained potentially hazardous organic and/or inorganic materials. In the case of cyclone dust and coal feeder and separator vent gases, this conclusion is confirmed by the results of the bioassay screening tests. However, in the case of the gasifier ash, the degree of hazard indicates a moderate potential hazard while bioassay tests indicate a low potential. Specific conclusions regarding the character of the various waste and process streams are given in the following sections.

Table 1-3. CHARACTERISTICS OF WASTE STREAMS AND POTENTIAL FUGITIVE EMISSIONS AND EFFLUENTS FROM THE CHAPMAN FACILITY

Stream Description	Stream Source	Stream Degree of Hazard: Health Concern	Stream Degree of Hazard: Ecological Concern	Bioassay Tests: Health[b]	Bioassay Tests: Ecological[c]	Remarks and Conclusions
Gaseous Waste Streams						
• Coal Feeder Vent Gas	Coal feeder	4×10^7	8×10^5	High	High	The SAM/1A[d] analysis and the bioassay test results of this waste stream indicated that it may have potentially hazardous health and ecological effects. However, it should be emphasized that this stream should NOT be a waste stream from new gasification plants, and should be controlled by recycling to the gasifier inlet air or product gas or by combusting it in a boiler or flare. The organic content in this stream was high with the major classes of organics being polycyclic aromatic hydrocarbons (PAH's), heterocyclic nitrogen compounds and phenols. Gaseous compounds in the product gas (CO, H_2 , CH_4, H_2S, COS, HCN, etc.) were also found in the coal feeder vent stream.
• Separator Vent Gas	Tar/liquor separator	1×10^8	1×10^6	High	NC	The results from the bioassay tests and SAM/1A analysis indicated that this stream may have potentially hazardous health and ecological effects. As for the coal feeder vent stream, this stream should NOT be a waste stream from new gasification plants. It may be controlled by recycling to the gasifier inlet air or product gas or by combusting it in a boiler or flare. The organic concentration in this stream was high, with the major organic classes being PAH's and phenols. Gaseous compounds in the product gas (CO, H_2, CH_4, H_2S, COS, HCN, etc.) were also found in the separator vent stream.
Solid Waste Streams						
• Gasifier Ash	Gasifier	5×10^3	8×10^5	Low	Low	The results of a SAM/1A analysis of the gasifier ash indicated that it may have a moderate potential for hazardous health and ecological effects. However, the results of the bioassay tests showed that the ash had a low potential for hazardous health and ecological effects. The extractable organic concentration in the ash was ∿20 μg/g; trace element concentrations were similar to the amounts of trace elements found in the ash from coal-fired boilers. The major trace elements found in the ash were alkali metals. Leaching tests are needed to determine appropriate design for landfills as final ash disposal sites.

Continued

Table 1-3. (Continued)

Stream Description	Stream Source	Stream Degree of Hazard: Health Concern	Stream Degree of Hazard: Ecological Concern	Bioassay Tests: Health[b]	Bioassay Tests: Ecological[c]	Remarks and Conclusions
• Cyclone Dust	Hot Cyclone	2×10^3	8×10^6	Low	High	From the results of a SAM/1A analysis, the cyclone dust could be potentially hazardous. The ecological bioassay test (soil microcosm) indicated that the dust had a high potential for hazardous effect, while the health effects test showed the dust had a low potential. The concentration of extractable organics in the dust was low (∿40 μg/g). The trace elements having the highest concentrations were P, K, Si and Fe. The carbon content of the dust was high (∿92%) which indicates that the dust is similar to devolatilized coal. If the dust is to be disposed of in a landfill, leaching tests are necessary; however, combustion of the dust is probably required before disposal.
Potential Fugitive Emissions						
• Raw Product Gas[e]	Gasifier and hot cyclone pokeholes	2×10^8	4×10^3	NC	NC	Fugitive emissions will contain tar particulates, volatile organics and inorganics in potentially hazardous concentrations. The characteristics of these emissions will be similar to those of the coal feeder vent gas.
Potential Fugitive Effluents						
• Separator Liquor (liquid)	Tar/liquor separator	3×10^5	2×10^5	Low	High	The separator liquor contained high levels of organics. These consisted primarily of thiols, phenols and heterocyclic aromatics. High levels of cyanide, ammonia, fluoride and sulfate were also found. High concentrations of sulfide were not found which may indicate that hydrogen sulfide sorbed in the quench either escapes as H_2S in the vent gases or is oxidized to sulfate. Separator liquor was found to be very toxic to aquatic species and should not be discharged without prior treatment.
By-product Tar (solid)	Tar/liquor separator	1×10^8	2×10^7	High	High	The by-product tar was the most potentially hazardous sample tested. A wide range of organics was found to be present. The main classes of organics were PAH's and heterocyclic nitrogen, oxygen and sulfur compounds. High levels of trace elements were also found.

[a] Degree of Hazard for a stream is the sum of the estimated concentrations of components (or classes of components) in the stream divided by their respective MATE values.

[b] Health tests include: Ames, Cytotoxicity (WI-38, RAM) and Rodent Acute Toxicity

[c] Ecological tests include: soil microcosm, plant stress ethylene, fresh water bioassay (algal, daphnia and fathead minnow) and salt water bioassay (algal, shrimp and sheepshead minnow).

[d] Source Assessment Model/1A

[e] Degree of Hazard values were estimated from the coal feeder vent gases by assuming a 1:10 gas to air dilution in the vent stream.

NC: Test not conducted

Gaseous Waste Streams -

Coal feeder vent gas - The coal feeder vent gas contained organics, inorganic gases and trace elements at potentially hazardous concentrations (greater than their Minimum Acute Toxicity Effluent (MATE) values). The bulk of the organics consisted of tar particulates. Volatile organics were also present. Their compositions were significantly different from those of the tar particulates. The volatile organics had a higher proportion of polycyclic aromatic hydrocarbons (PAH's) while the tar contained a higher proportion of heterocyclic aromatics. The tar particulates in the coal feeder vent had organic characteristics which were different from those of the separator tar, with the coal feeder vent tar having higher concentrations of PAH's, heterocyclic nitrogen compounds and phenols. The gaseous inorganic compounds found in the coal feeder vent stream appeared in concentrations higher than their respective MATE values.

Separator vent gas - The separator vent gas contained volatile organics and inorganics at potentially hazardous concentrations (greater than their MATE values). Volatile organics consisted primarily of PAH's and phenols. The inorganics consisted of gaseous inorganic compounds and a variety of trace elements.

Solid Waste Streams -

Gasifier ash - Very low levels of organics were found in the gasifier ash ($\sim$20 μg/g). The major trace elements found were alkali and alkaline earth metals. Trace element concentrations were similar to those found in ash from coal-fired boilers.

Cyclone dust - Very low levels of organics were found in the cyclone dust ($\sim$40 μg/g). The dust was similar to devolatilized coal, as indicated by its carbon, oxygen and hydrogen content. A wide variety of trace elements were found, but generally at much lower concentrations than those found in the gasified ash. The major trace elements found were K, Si, P and Fe.

Potential Fugitive Emissions -

Raw product gas - The gasifier and hot cyclone pokeholes are potential sources of fugitive emissions of raw product gas. Raw product gas contains tar, particulates and volatile organics and inorganics at potentially hazardous concentrations.

Potential Fugitive Effluents -

Separator liquor (liquid) - The tar/liquor separator is a potential source of fugitive effluent of separator liquor. The separator liquor contains high levels of organics, primarily thiols, phenols and heterocyclic aromatics. High levels of cyanide, ammonia, fluoride and sulfate were also found. Sulfide was not found at high concentrations, which may indicate oxidation of the sulfide to sulfate or escape as H_2S in the vent gases Higher concentrations of trace elements were found in the separator liquor than in the by-product tar.

By-product tar (solid) - The tar/liquor separator is also a potential source of fugitive effluents of by-product tar. The by-product tar was the most potentially hazardous material tested, and was found to contain a wide range of organics and inorganics. The main organic constituents were PAH's and heterocyclic nitrogen, oxygen, and sulfur compounds. Fewer trace elements were found in the by-product tar than were found in the other streams tested. However, some trace element concentrations exceeded their respective MATE values.

1.2.2 Evaluation of Level 1 Methodology

Level 1 sampling and analytical methodology was evaluated as part of the overall program. In order to meet the objectives of this program, certain modifications to the Level 1 sampling and analytical methodologies were made. These modifications do not reflect official changes in Level 1. In most cases, the streams and samples that required modifications are somewhat unique to coal gasification facilities and do not represent a majority of the waste streams that can be effectively sampled and analyzed by Level 1 techniques. Conclusions drawn from the evaluation are presented in the following sections.

Sampling Methodology -

Level 1 methodology for grab sampling of gas streams required certain modifications to suit the conditions encountered during this STE program. The modifications included: (1) preconditioning sample containers, and (2) pretreatment of samples to eliminate interfering components such as particulates, tar, oil, and water.

Level 1 methodology for grab sampling of liquid and solid streams was adequate for accomplishment of the test objectives. Procedures for selection of sample points for Level 1 testing were generally straightforward.

Specific details and conclusions drawn from the evaluation of Level 1 sampling methodology are presented in Table 1-4.

Analytical Methodology -

Level 1 methods gave satisfactory results in the following areas: liquid chromatographic separation, low resolution mass spectrometry and sparks source mass spectrometry. Problems were encountered using chemiluminescence for NO and NO_x determinations and using the test kits for hardness, nitrate and nitrite analyses. On site experiments indicated that reducing gas constituents in the gaseous samples to be analyzed for NO and NO_x caused problems in the chemiluminescense technique. EPA Method 7 procedure for NO_x determinations is recommended for analyzing gaseous streams containing reducing gas constituents. The problems encountered using the test kits were probably due to the high levels of organics in the separator liquor sample.

Alternate methods used to analyze gaseous species were used because of the need to obtain quantitative data for input to control technology development (i.e. gaseous sulfur species), the Level 1 detection limits were too high (i.e. NH_3 and HCN) or a comparible technique was easier to use. Sulfur species were analyzed using a column to obtain quantitative data on H_2S, COS, CS_2 and SO_2 in the gaseous streams sampled. Impinger techniques were used for NH_3 and HCN determinations. For fixed gases, a Fisher Gas Partitioner was used to separate N_2 and O_2 and permit quantification of the other species on a single sample injection.

Table 1-4. CONCLUSIONS FROM EVALUATION OF LEVEL 1 SAMPLING METHODOLOGY DURING THE TEST PROGRAM AT THE CHAPMAN FACILITY

Sampling Methodology	Remarks and Conclusions
Gas Sampling	
• Grab sampling	Level 1 methodology for collecting grab samples of gas streams required certain modifications to suit the conditions encountered during this STE program. The modifications included: (1) preconditioning sample containers and (2) pretreatment of samples to eliminate interfering species such as tars and condensables. A pretreatment train was necessary for removal of particulates, tar, oil, and water from certain gas samples since these impurities would interfere with the analysis for gaseous species. Problems were encountered in the use of a filter to remove tar and particulates. It was concluded that the tar/particulate layer on the filter sorbed significant amounts of sulfur species.
• SASS train sampling	The source assessment sampling system (SASS) must be modified when sampling gaseous streams containing high levels of tar, oil and/or water vapor. When sampling the coal feeder vent, the filter in the particulate collection module frequently became plugged with tar. To alleviate this, the temperature in the particulate module was reduced in order to collect a majority of the tar as particulates in the cyclones, instead of as a highly viscous fluid on the cyclone filter. When sampling streams that have a high moisture content, such as the separator vent, additional cooling was required in the SASS train organic module. This modification has been made in the new SASS train operating instructions. In most cases, sampling gaseous waste streams that contain high concentrations of tars, oils and/or moisture will involve either modifying the SASS train or using an alternate method. For example, in-line filters and/or electrostatic precipitators may be used to collect tars and oils.
Liquid and Solid Sampling	The Level 1 procedures for sampling liquid waste streams and potential fugitive effluents were adequate and generally straightforward.

During the analysis of trace elements, the Parr bomb solution contained high concentrations of Ca, K and P. These needed to be factored into the evaluation of the SSMS data.

During analyses for organic species, the extraction techniques specified by Level 1 methodology were found to be inadequate. Mass recoveries were generally lower than desired and certain highly polar organics were not extracted by Level 1 techniques. Extraction with methylene chloride at two pH's may solve this potential problem. Problems were encountered with Level 1 methods for total chromatographical organics, especially with heavy organic loading. In those cases, the resulting chromatograms were too complex for reliable application of the specified integration technique. Gravimetric determinations presented problems. Specifically, problems in weighing samples that had a very low concentration of organics arose when only a small quantity of sample was contained on the watch glass. A scum formed over the surface of certain samples which could have prevented the volatile material from being evaporated

Specific details and conclusions drawn from the evaluation of Level 1 methodology are presented in Table 1-5.

1.3 RESULTS OF THE SOURCE TEST EVALUATION

The results of the STE program performed at a Chapman gasification facility are divided into the following areas:

- total plant,
- gaseous waste streams,
- solid waste streams,
- potential fugitive emissions and effluents, and
- hot cyclone performance.

The Level 1 chemical and bioassay test results of each of the above areas are discussed in the following text.

Table 1-5. CONCLUSIONS FROM EVALUATION OF LEVEL 1 ANALYTICAL METHODOLOGY DURING THE TEST PROGRAM AT THE CHAPMAN FACILITY

Analysis Methodology	Remarks and Conclusions
Gaseous Species	
• Nitrogen Oxides	Analysis of NO by chemiluminescence in all of the gas stream samples was found to be adequate; however, the technique did not work for analyzing NO_x. This was probably caused by the presence of reducing gases in the sample. EPA Method 7 is recommended for NO_x analysis.
• NH_3 and HCN	The gas chromatography technique specified by Level 1 was not sensitive enough for determination of NH_3 or HCN in the gas samples. NH_3 and HCN samples were collected in impingers and analyzed by wet chemical methods.
• Sulfur Species (H_2S, COS, CS_2, SO_2)	The gas chromatography technique used to analyze sulfur species (H_2S, COS, CS_2, and SO_2) was used in order to give better separation than the Level 1 procedure.
• Fixed Gases (CO, H_2, CO_2, O_2, N_2, CH_4)	The Level 1 procedure for fixed gases analysis was modified. A Fisher Gas Partitioner was used so that nitrogen and oxygen could be separated and the other species quantified on a single sample injection.
Inorganics	
• Test kits for aqueous phase analysis	The test kits specified by Level 1 were found to give adequate results in most cases. However, results could not be obtained when using these kits for the determination of nitrate, nitrite, or hardness, probably because of the high organic content in the separator liquor.
• Trace Elements	The Parr bomb solution contained high concentrations of Ca, K, and P and needed to be factored into the SSMS data evaluation.
Organics	
• Extraction Techniques	The extraction techniques specified by Level 1 were found to be inadequate for extracting aqueous samples and XAD-2 resins containing highly polar organic compounds. Total mass recoveries using the Level 1 procedure were less than 50% for aqueous samples and approximately 70% for XAD-2 resins.
• Total Chromatographable Organics (TCO)	Problems arose when using the procedure for determining TCO's for most of the organic extracts. This was especially true when high amounts of organics were present because the resulting chromatograms were so complex that the integration techniques could not be used reliably.
• Gravimetric	Problems were encountered with inaccuracy when weighing small quantities of organics obtained from liquid chromatography fraction. Also, it appeared possible that volatile organics might be trapped within a sample during evaporation. A scum formed on the surface of certain samples which could prevent or significantly hamper the evaporation of volatile organics. Such problems could result in inconsistency in mass balances calculated from these data.
• Liquid Chromatography (LC)	The liquid chromatography method specified by Level 1 was capable of handling a loading of up to 400 mg. Even though there was significant overlap of compounds in different LC fractions, the LC procedure was adequate for obtaining results specified by Level 1.
• Infrared (IR) and Low Resolution Mass Spectrometry (LRMS)	The amount of information obtained from the IR spectra was of minimal value for compound class identification because of the complex nature of the samples. Most of the identifications were made from the results of the LRMS analyses of the LC fractions. Compound identification using LRMS was also difficult because of the complex nature of the sample, and may not be valid.

1.3.1 Total Plant

The mass balance of the major input and output streams around the gasification facility is given in Table 1-6. During the test, two gasifiers (No's. 2 and 3) were operating at a combined capacity of approximately 60 percent, with the No. 3 gasifier at a higher capacity than the No. 2 gasifier. The total mass of the streams exiting the plant was found to be within 16% of the total mass entering the facility.

The results from the SAM/1A analysis and bioassay tests of the multimedia waste streams, and the potential fugitive emissions and effluent streams are presented in Table 1-7. In most cases, the results of the SAM/1A analysis (degree of hazard values) compared favorably to the bioassay test results. Exceptions were noted with the results for gasifier ash and separator liquor. For the ash stream, the degree of hazard values indicated a moderate potential for hazardous health and ecological effects, while the bioassay tests indicated a low potential. The health degree of hazard for the separator liquor indicated moderate potential for hazardous effects, while the health bioassay tests indicated low potential.

1.3.2 Gaseous Waste Streams

The gaseous waste streams tested in this program were the coal feeder and separator vent streams. The results of the SAM/1A, chemical and bioassay tests for each stream are presented in the following sections.

Coal Feeder Vent Stream -

The coal feeder vent stream contained organics and inorganic components similar to those found in the raw product gas stream. The tarry material collected in the particulate module of the SASS train was significantly different from the material collected in the organic module. The predominant organic categories found in both the organic module and the particulate module samples were PAH's, heterocyclic aromatics, and phenols. However, PAH's represented almost 80% of the organics from the organic module, while in the particulate module each of the above three categories accounted for ∿20-40% of the organics found. Additionally, small quantities of a wider

Table 1-6. MASS BALANCE AROUND THE CHAPMAN FACILITY

Stream Description	Flow Rate (kg/s)[a]		
	No. 2 Gasifier/ Cyclone	No. 3 Gasifier/ Cyclone	Total Facility
INPUT STREAMS			
Air	0.33*	0.44*	0.77
Steam	0.068*	0.092*	0.16
Coal Feed	0.129	0.175	0.304
TOTAL	0.527	0.707	1.234
OUTPUT STREAMS			
Gasifier Ash (dry)	0.0085	0.010	0.0185
Cyclone Dust	0.00067	0.00094	0.00161
Cooled Product Gas **	0.420*	0.569*	0.989
By-Product Tar	0.0129*	0.0175*	0.0304*
TOTAL	0.442	0.597	1.040
INPUT MINUS OUTPUT			
kg/s	0.085	0.11	0.19
% of INPUT	16	16	16

[a]Kg/s = 7938 lb/hr

* Back calculated by ratioing coal feed rate data.

** Based on gas molecular weight of 25.4.

Table 1-7. SUMMARY OF SAM/1A AND BIOASSAY TEST RESULTS FOR TOTAL PLANT WASTE STREAMS AND POTENTIAL FUGITIVE EMISSIONS AND EFFLUENTS

	Degree of Hazard[a,b]		Toxic Unit Discharge[c]		Bioassay Tests	
	Health Concern	Ecological Concern	Health Concern	Ecological Concern	Health[d]	Ecological[e]
Gaseous Waste Streams						
•Coal Feeder Vent Gas	4×10^7	8×10^5	2×10^6	5×10^4	High	High
•Separator Vent Gas	1×10^8	1×10^6	6×10^7	6×10^5	High	NC
Solid Waste Streams						
•Cyclone Dust	2×10^3	8×10^6	3×10^3	1×10^7	Low	High
•Gasifier Ash	5×10^3	8×10^5	9×10^4	2×10^7	Low	Low
Potential Fugitive Emissions						
•Raw Product Gas	4×10^8	8×10^6	ND	ND	NC	NC
•Separator Liquor	3×10^5	2×10^5	ND	ND	Low	High
•By-Product Tar	1×10^8	2×10^7	ND	ND	High	High

[a]Degree of Hazard is defined as the ratio of a pollutant's concentration in a stream to its minimum acute toxicity effluent (MATE) value.

[b]Potential for hazardous health and ecological effects can be estimated by the following:

Potential Effect	Degree of Hazard
High	$>10^7$
Moderate	$10^5 - 10^7$
Low	$10^2 - 10^5$
Inconclusive	$<10^2$

[c]Toxic Unit Discharge is determined by multiplying the value of Degree of Hazard by the waste stream flow rate (gases: Nm^3/sec, liquids: ℓ/sec, solids: g/sec).

[d]Health tests included: Ames, Cytotoxicity (WI-38, RAM), Rodent Acute Toxicity

[e]Ecological tests included: Soil microcosm, plant stress ethylene, fresh water bioassay, and salt water bioassay

NC - Test not conducted
ND - Flows not determined for potential fugitive emissions or effluents

variety of organic categories, including the volatile ones, were found in the organic module. The concentrations of the various organics found in the particulate module and organic module samples are compared in Figure 1-2.

A summary of the degree of hazard values for the Multimedia Environmental Goals (MEG) chemical categories or compounds found in the sample is shown in Table 1-8. Also shown in this table are the results from specific bioassay tests. Positive results were obtained from the Ames test while the plant stress ethylene test showed negative results.

The information presented in Table 1-8 can also be used as a basis for planning subsequent Level 2 chemical characterization tests. A high priority for Level 2 chemical analysis is placed on MEG categories having degree of hazard values greater than 100. Medium and low priorities are given to categories having degree of hazard values between 10-100 and 1-10, respectively. Based on these prioritization criteria, a higher priority exists for a detailed characterization of fused aromatic hydrocarbons and their derivatives, CO, and Cr than for the other chemical categories listed in this table.

It should be emphasized that this waste stream probably will not be present in new low-Btu gasification facilities. In new facilities, this stream will probably be controlled by combustion in a flare or incinerator or by recycling to the gasifier inlet air.

Separator Vent Stream -

A summary of the results from the Level 1 chemical analyses and bioassay tests for the separator vent stream is presented in Table 1-9. The separator vent stream contained significant concentrations of a variety of classes of organic compounds, particularly methane and other aliphatic hydrocarbons, amines, phenols, PAH's, and heterocyclic organics. Most of the degree of hazard values for the organic classes were greater than 1.

The concentrations of most of the inorganic species were lower than their respective MATE values. However, high concentrations of NH_3, HCN, NO, NO_2, CO, and H_2S were found.

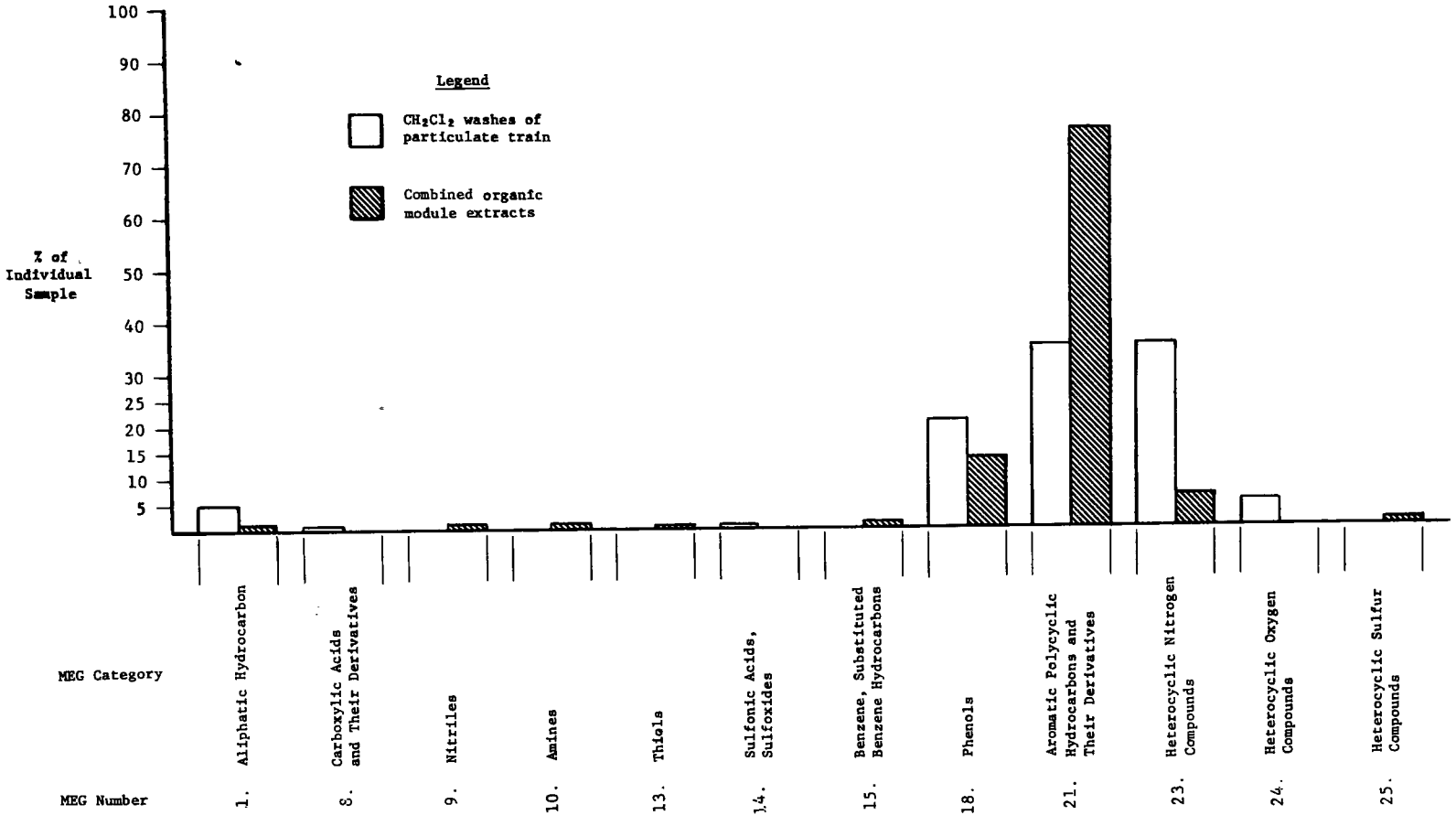

Figure 1-2. COMPARISON OF PARTICULATE TRAIN AND ORGANIC MODULE SAMPLES - COAL FEEDER VENT GAS

Table 1-8. SUMMARY OF LEVEL 1 CHEMICAL AND BIOASSAY TEST RESULTS FOR COAL FEEDER VENT GASES

Priority for Level 2 Chemical Analysis	Degree of Hazard Range	Compound Categories Found From Level 1 Chemical Analysis: Health Concern	Compound Categories Found From Level 1 Chemical Analysis: Ecological Concern	Results of the Bioassay Tests: Test	Results of the Bioassay Tests: Results
High	$10^7 - 10^8$	Fused aromatic hydrocarbons and their derivatives	-	Health[a]	
				• Ames	P
				• WI-38 (EC_{50})[b]	4×10^{-4}
	$10^6 - 10^7$	-	-	• RAM (EC_{50})[b]	$>2 \times 10^{-3}$
	$10^5 - 10^6$	-	C_2 hydrocarbons		
	$10^4 - 10^5$	-	-	Ecological	
	$10^3 - 10^4$	-	-	• Plant Stress Ethylene	N
	$10^2 - 10^3$	Cr	CO		
Medium	$10 - 10^2$	Heterocyclic nitrogen compounds, carboxylic acids & their derivatives, amines, sulfonic acids and sulfoxides, phenols, Hg, U, CO	NH_3, V, Hg		
Low	$1 - 10$	C_1, thiols, benzene and substituted benzene hydrocarbons, heterocyclic sulfur compounds, Al, NH_3, P, As, H_2S, Cu, Cd, NO, CO_2, HCN			

P: Positive
N: Negative

[a]Health bioassay tests were performed on the XAD-2 extract from the coal feeder vent gases

[b]EC_{50}'s were calculated on the XAD-2 extract for the coal feeder vent gases by:

$$EC_{50} = \begin{bmatrix} EC_{50} \text{ reported} \\ \text{in } \mu\ell \text{ of extract} \\ \text{per m}\ell \text{ culture} \end{bmatrix} \times \begin{bmatrix} \text{mg of organics} \\ \text{extracted per m}\ell \\ \text{of extract} \end{bmatrix} \times \begin{bmatrix} \text{mg of organics} \\ \text{per Nm}^3 \text{ of} \\ \text{vent gas} \end{bmatrix} = \text{Nm}^3 \text{ vent gas/m}\ell \text{ culture}$$

Table 1-9. SUMMARY OF LEVEL 1 CHEMICAL AND BIOASSAY TEST RESULTS FOR SEPARATOR VENT GASES

Priority for Level 2 Chemical Analysis	Degree of Hazard Range	Compound Categories Found From Level 1 Chemical Analysis: Health Concern	Compound Categories Found From Level 1 Chemical Analysis: Ecological Concern	Results of the Bioassay Tests: Test	Results of the Bioassay Tests: Results
High	$10^7 - 10^8$	Fused aromatic hydrocarbons and their derivatives	-	Health	
				• Ames	SP
				• WI-38 (EC_{50})[b]	7×10^{-6}
	$10^6 - 10^7$	-	C_2 hydrocarbons	• RAM (EC_{50})[b]	1×10^{-5}
	$10^5 - 10^6$	-			
	$10^4 - 10^5$	-			
	$10^3 - 10^4$	Amines	NH_3		
	$10^2 - 10^3$	Heterocyclic nitrogen compounds, Cr, Ag, CO, phenols	CO, V		
Medium	$10 - 10^2$	Heterocyclic sulfur compounds, Cu, NO_2, NH_3, P, H_2S	-		
Low	$1 - 10$	Methane, halogenated aliphatic hydrocarbons, carboxylic acids & their derivatives, Li, HCN, P, As, CO_2, Fe, Ni, U, C_1, C_6 hydrocarbons	HCN, Hg		

SP: Slightly positive

[a]Health tests were performed on the XAD-2 extract from the separator vent gases

[b]EC_{50} were calculated on the XAD-2 extract for the separator vent gases by:

$$EC_{50} = \begin{bmatrix} EC_{50} \text{ reported} \\ \text{in } \mu\ell \text{ of extract} \\ \text{per m}\ell \text{ culture} \end{bmatrix} \times \begin{bmatrix} \text{mg of organics} \\ \text{extracted per m}\ell \\ \text{of extract} \end{bmatrix} \times \begin{bmatrix} \text{mg of organics} \\ \text{per Nm}^3 \text{ of} \\ \text{vent gas} \end{bmatrix} = \text{Nm}^3 \text{ vent gas/m}\ell \text{ culture}$$

The trace element concentrations were generally low, with Na, K, Ca, P, Fe, Cu, and Ag found in the highest concentrations.

The chemical categories having the highest priority for Level 2 chemical analysis are also shown in Table 1-9. These categories are fused aromatic hydrocarbons and their derivatives, amines, CO, NH_3, heterocyclic nitrogen compounds, Cr, V, Ag, and C_2 hydrocarbons.

Slightly positive results from the Ames bioassay test were obtained from the separator vent XAD-2 extract. However, this stream probably will not be a gaseous emission from new gasification facilities. It will probably be recycled to the gasifier or product gas stream or combusted in a flare.

1.3.3 Solid Waste Streams

The solid waste streams from the Chapman gasification facility were the gasifier ash and the cyclone dust. The Level 1 chemical and bioassay test results for these streams are presented in the following sections.

Gasifier Ash -

Table 1-10 presents a summary of the Level 1 chemical and bioassay test results for the gasifier ash. The major trace elements ($>10^3$ μg/g) identified in the ash were alkali metals, alkaline earths, Al, Si, Ti and Fe. From the degree of hazard values in Table 1-10, the elements with the highest priority for Level 2 chemical analysis are Be, P, Fe, Ca, Al, Li, K, Ba, Se, Pb, Cu, Ti, Cd, Sb, V, Co, U, and Cs.

The gasifier ash had the lowest toxicity in the soil microcosm test, showed negative results in the Ames Test and gave signs of low toxicity in the rodent acute toxicity test. These results are not consistent with the degree of hazard values. This inconsistency may indicate that further chemical characterization and/or bioassay testing are needed.

Leaching tests are needed for determination of the types and amounts of trace elements that are leachable from the

Table 1-10. SUMMARY OF LEVEL 1 CHEMICAL AND BIOASSAY TEST RESULTS FOR GASIFIER ASH

Priority for Level 2 Chemical Analysis	Degree of Hazard Range	Compound Categories Found From Level 1 Chemical Analysis: Health Concern	Compound Categories Found From Level 1 Chemical Analysis: Ecological Concern	Results of the Bioassay Tests: Test	Results of the Bioassay Tests: Results
High	$10^5 - 10^6$	-	P	Health	
	$10^4 - 10^5$	-	Fe, Cu	• Ames	N
	$10^3 - 10^4$	Fe	Ca, Al, Ti, Cd	• RAM (EC_{50})[a]	>300
	$10^2 - 10^3$	Be, Li, Ca, Ba, Se, Cs, Cu	Ba, Pb, Se, Sb, V, Co, U	• R.A.T. - LD_{50}[b]	L >10
Medium	$10 - 10^2$	Mg, Sr, Al, Pb, P, Sb, Ti, Cr, Co, Cd, Si, Hg	Li, Mg, Cr, Be	Ecological • Soil Microcosm[c]	4
Low	$1 - 10$	Zr, V, U, Rb, F^-	As		

R.A.T.: Rodent Acute Toxicity test
N: Negative
L: Low toxicity (*i.e.*, no significant effects noted)

[a] EC_{50} values are reported in μg of solid per mℓ of culture

[b] LD_{50} values are in g of sample per Kg of rat

[c] Soil microcosm test results were ranked according to toxicity. The gasifier ash ranking of 4 was less toxic than the coal feed, cyclone dust and by-product tar and more toxic than the separator liquor.

ash. Bioassay tests should also be performed on the resulting leachate.

The concentration of extractable organics in the ash was ∿20 μg/g. Further organic analysis is needed since certain organic compounds, such as benzo-a-pyrene, have MATE values significantly lower than 20 μg/g.

Cyclone Dust -

The results of the chemical and bioassay tests performed on the cyclone dust are given in Table 1-11. No data for organics are given in this table because the concentration of extractable organics was small (∿40 μg/g). However, further organic analysis is recommended since certain organic compounds have MATE values much lower than 40 μg/g.

The major trace elements ($>10^3$ μg/g) found in the cyclone dust were Ca, Si, and P. While the concentrations of most of the trace elements found in the cyclone dust were lower than the concentrations found in the gasifier ash, most of the concentrations still exceeded their respective MATE values. The elements with the highest priority for Level 2 chemical analysis are P, Ni, Mn, Fe, Pb, Ba, Sb, Ti, and Cu.

The bioassay tests for the cyclone dust indicated a low potential for hazardous health effects; however, it was the most toxic of the samples tested in the soil microcosm test. Leaching tests are needed, along with bioassay tests of the resulting leachate, if disposal in a landfill is to be considered. However, because of its high carbon content, cyclone dust may prove to be a salable by-product.

1.3.4 Potential Fugitive Emissions and Effluents

Fugitive emissions and effluents from pumps, valves, flanges, etc., can present significant health and environmental hazards. Three process streams, raw product gas, separator liquor, and by-product tar, were considered in order to assess the hazard potential of fugitive emissions and effluents from this process.

Table 1-11. SUMMARY OF LEVEL 1 CHEMICAL AND BIOASSAY TEST RESULTS FOR CYCLONE DUST

Priority for Level 2 Chemical Analysis	Degree of Hazard Range	Compound Categories Found From Level 1 Chemical Analysis: Health Concern	Compound Categories Found From Level 1 Chemical Analysis: Ecological Concern	Results of the Bioassay Tests: Test	Results of the Bioassay Tests: Results
High	$10^6 - 10^7$	-	P	Health	
	$10^5 - 10^6$	-	-	• Ames	N
	$10^4 - 10^5$	-	-	• RAM (EC_{50})[a]	>1000
	$10^3 - 10^4$	-	Mn, Fe, Cu, Ni	• R.A.T. - LD_{50}[b]	M >10
	$10^2 - 10^3$	Pb, P, Mn, Fe, Ni	Ba, Pb, Sb, Ti		
				Ecological	
Medium	$10 - 10^2$	Cr, Cu, Ba	Ca, Al, V, Cr	• Soil Microcosm[c]	1
Low	$1 - 10$	Li, Mg, Ca, Sb, Zr, V, Co, Si, Ti	Li, Mg, As, Co		

R.A.T.: Rodent Acute Toxicity test
N: Negative
M: Medium toxicity (*i.e.*, rats showed hair loss, eye discoloration, etc.)

[a] EC_{50} values are reported in μg of sample per mℓ of culture

[b] LD_{50} values are in g of sample per Kg of rat

[c] Soil microcosm test results were ranked according to toxicity. The cyclone dust was more toxic than the coal feed, ash, tar and separator liquor.

Raw Product Gas -

The potential health and ecological effects of fugitive emissions of raw product gas were estimated using the results of chemical analysis of the coal feeder vent stream. It was assumed that raw product gas was diluted 1:10 by air in the vent stream. This dilution factor was based on the results of gaseous species analyzed in both the raw product gas and coal feeder vent gas. Table 1-12 shows the degree of hazard values for MEG categories estimated to be in the raw product gas. If significant quantities of this gas stream appear as fugitive emissions, the compound classes with the highest priority for Level 2 chemical analysis are given in this table.

Separator Liquor -

The separator liquor was found to contain high concentrations of organic compounds, especially the polar species expected to be associated with an aqueous medium. The major organic categories identified were thiols, phenols, and heterocyclic organics. Smaller amounts of carboxylic acids, glycols, and PAH's were found. Most of these organic categories had degree of hazard values greater than 1. A summary of the results of the Level 1 chemical and bioassay tests is given in Table 1-13.

The results of the bioassay tests indicated that the sample was very toxic to aquatic species; however, it was least toxic in the soil microcosm test, and had negative results for health effects tests. Because of its toxic effects on aquatic species, it would be necessary to treat this liquor before discharge.

Water quality parameters for the separator liquor were also determined using test kits specified by Level 1 procedures. The results of these analyses showed high levels of ammonia, cyanide, fluoride, chloride, carbonate and sulfate in the liquor. However, the concentration of sulfide was lower than expected. This, coupled with the high sulfate levels, indicates that considerable oxidation of dissolved sulfur species may occur. The quench liquor also contained high levels of BOD and COD. In addition, it contained high concentrations of suspended solids and total dissolved solids, was highly colored, and had a high odor threshold number.

Table 1-12. SUMMARY OF DEGREE OF HAZARD VALUES FOR MEG CATEGORIES ESTIMATED TO BE IN THE RAW PRODUCT GAS STREAM

Priority for Level 2 Chemical Analysis	Degree of Hazard Range[a]	Compound Categories Estimated in the Raw Product Gas: Health Concern	Compound Categories Estimated in the Raw Product Gas: Ecological Concern
High	$10^8 - 10^9$	Fused aromatic hydrocarbons and their derivatives	-
	$10^7 - 10^8$	-	-
	$10^6 - 10^7$	-	C_2 hydrocarbons
	$10^5 - 10^6$	-	-
	$10^4 - 10^5$	-	-
	$10^3 - 10^4$	Cr	CO
	$10^2 - 10^3$	Heterocyclic nitrogen compounds; carboxylic acids and their derivatives; amines; sulfonic acids and sulfoxides; phenols; Hg; U; CO	NH_3; V; Hg
Medium	$10 - 10^2$	Heterocylic sulfur compounds; thiols; benzene and substituted benzene hydrocarbons; Al; NH_3; P; As; Cu; Cd; H_2S; CO_2; NO; HCN; CH_4	-
Low	$1 - 10$	C_2, C_4 and C_6 hydrocarbons; heterocyclic oxygen compounds; Li; Tl; Si; Pb; Sb; SO_2; CS_2; Cl; Ti; Zr; V; Fe; Co; Ni; Zn; Ag	HCN

[a]Degree of hazard values for the raw product gas were estimated using the chemical analysis results from the coal feeder vent assuming a 1:10 dilution of raw product gas to air in the vent stream.

Table 1-13. SUMMARY OF THE LEVEL 1 CHEMICAL AND BIOASSAY TEST RESULTS FOR THE SEPARATOR LIQUOR

Priority for Level 2 Chemical Analysis	Degree of Hazard Range	Compound Categories Found from Level 1 Chemical Analysis		Results of the Bioassay Tests	
		Health Concern	Ecological Concern	Test	Results
High	$10^5 - 10^6$	Fused aromatic hydrocarbons and their derivatives	NH_3	Health	
				• Ames	N
				• RAM (EC_{50})[a]	>600
				• R.A.T.	L
	$10^4 - 10^5$	Phenols	CN^-, P	- LD_{50}[b]	>10
	$10^3 - 10^4$	NH_3, CN^-	Phenols, fused aromatic hydrocarbons and their derivatives	Ecological	
				• Fresh water[c]	
				- Algal (EC_{50}, 15 days)	0.1-1.0%
				- Daphnia (LC_{50}, 48 hr)	0.11%
	$10^2 - 10^3$	Heterocyclic nitrogen compounds	Carboxylic acids and their derivatives	- Fathead minnow (LC_{50}, 96 hr)	0.02%
Medium	$10 - 10^2$	Thiols, Se	Glycols and epoxides, As, Se	• Salt Water[c]	
				- Algal (EC_{50}, 12 days)	0.53/0.41%
				- Shrimp (LC_{50}, 96 hr)	0.25%
Low	1 - 10	Heterocyclic sulfur compounds, P, As, F^-, Cl^-	Ca, Fe, Cd	- Sheepshead minnow (LC_{50}, 96 hr)	0.16%
				• Soil microcosm[d]	5

R.A.T.: Rodent acute toxicity test
N : Negative
L : Low toxicity (i.e., no significant effects noted)

[a] EC_{50} values are reported in μg of sample per ml of culture.

[b] LD_{50} values are reported in g of sample per Kg of rat.

[c] EC_{50} and CO_{50} values for fresh and salt water bioassays are reported in weight percent of sample.

[d] Soil microcosm test results were ranked according to toxicity. The separator liquor was less toxic than the coal feed, ash, cyclone dust, and tar.

By-Product Tar -

The chemical and bioassay test results for the by-product tar are shown in Table 1-14. As expected, high concentrations of organics were found. Most organic compound classes present had a degree of hazard value greater than 1. A wide range of trace elements were also identified, with the major elements being K and S.

The by-product tar was one of the most toxic samples collected. Positive results were obtained in the Ames and rodent acute toxicity tests. The soil microcosm test also showed a high potential for hazardous ecological effects. Because of the potential hazardous health effects exhibited by this stream, leaks around pumps, valves, etc. must be minimized and contained.

1.3.5 Summary of Cyclone Particulate Removal Efficiency Test

Particulates removed by cyclones in the gasification process consisted of coal dust, ash and tar entrained in the raw product gas stream. Overall particulate removal efficiency was determined by collecting particulates in in-stream alundum thimbles placed at the inlet and outlet of a cyclone. The average total particulate removal efficiency for the cyclone was 62 percent with values ranging from 29 to 78 percent.

1.4 RECOMMENDATIONS

This section is divided into two categories:

- future data needs, and
- methodologies used.

Future data needs emphasize further chemical and bioassay testing requirements. Recommendations for methodologies used are primarily concerned with sampling and analysis procedures and techniques used for assessment of potential health and ecological effects from plant waste streams.

Table 1-14. SUMMARY OF LEVEL 1 CHEMICAL AND BIOASSAY TEST RESULTS FOR BY-PRODUCT TAR

Priority for Level 2 Chemical Analysis	Degree of Hazard Range	Compound Categories Found from Level 1 Chemical Analysis		Results of the Bioassay Tests	
		Health Concern	Ecological Concern	Test	Result
High	$10^7 - 10^8$	Fused aromatic hydrocarbons and their derivatives	Carboxylic acids and their derivatives	Health	
				• Ames	P
				• RAM (EC_{50})[a]	>1000
	$10^6 - 10^7$	Phenols	-	• R.A.T. - LD_{50}[b]	H >10
	$10^5 - 10^6$	-	Halogenated aliphatic hydrocarbons, amines	Ecological	
				• Soil microcosm[c]	2
	$10^4 - 10^5$	Amines, benzene and substituted benzene hydrocarbons, heterocyclic nitrogen compounds	Benzene and substituted benzene hydrocarbons, phenols		
	$10^3 - 10^4$	Halogenated aliphatic hydrocarbons, heterocyclic sulfur compounds	Cu, Cd		
	$10^2 - 10^3$	Carboxylic acids and their derivatives, Cr	Aliphatic hydrocarbons, Pb, Sb, Cr		
Medium	$10 - 10^2$	Ba, Pb, Cu, Cd	Ba		
Low	$1 - 10$	Aliphatic hydrocarbons, heterocyclic oxygen compounds, Sb, Hg, Mg	As, V		

R.A.T.: Rodent acute toxicity test
P : Positive
H : High toxicity

[a] EC_{50} values are reported in μg of sample per ml of culture

[b] LD_{50} values are reported in g of sample per Kg of rat

[c] Soil microcosm test results were ranked according to toxicity. The by-product tar was less than the cyclone dust and more toxic than the coal feed, ash and separator liquor.

1.4.1 Future Data Needs

Recommendations for future data needs on the multimedia waste streams and potential fugitive emissions and effluents are summarized in Tables 1-15 and 1-16. Priorities for Level 2 chemical and biological analyses of chemical compound classes in each waste stream are based on the results of SAM/1A analyses.

1.4.2 Methodologies Used

Recommendations for the methodologies used are divided into sampling methods, analysis methods, and SAM/1A analysis. The methodologies, or modifications of them, were used in the assessment of potential health and ecological hazards associated with the multimedia waste streams and potential fugitive emissions and effluents from the Chapman facility.

Sampling Methods -

Gas stream grab sampling - Two modifications to Level 1 methodology were used for collecting grab samples from gaseous streams. These are as follows:

(1) Glass sampling containers for collecting gas samples for sulfur species (H_2S, COS, CS_2, SO_2) analysis should be silylated to assure that these species will not react with and/or be sorbed on the walls of the container.

(2) A pretreatment train is recommended for removal of particulates, tars, oils and water from the gas sample. Otherwise, these constituents will interfere with subsequent analyses.

SASS train sampling - The following modifications to the SASS train were used when sampling streams containing high levels of tar/oil particulates and water vapor.

(1) The SASS train originally was not adequate in sampling the coal feeder vent stream, which had a high concentration of tars and oils. The filter

Table 1-15. RECOMMENDATIONS FOR FUTURE DATA NEEDS FOR WASTE STREAMS

Waste Stream	Total Stream Degree of Hazard: Health Concern	Total Stream Degree of Hazard: Ecological Concern	Stream Components Priority for Level 2 Chemical Analysis: High Priority Degree of Hazard $10^3 - 10^2$	Medium Priority Degree of Hazard $10^2 - 10$	Low Priority Degree of Hazard $10 - 1$	Remarks & Recommendations
Separator Vent	1×10^8	1×10^8	Fused aromatic hydrocarbons and their derivatives, amines, heterocyclic nitrogen compounds, CO, NH_3, Cr, Ag, V, C_2 hydrocarbons, phenols	Heterocyclic sulfur compounds, Cu, NO_2, P, H_2S	Methane, halogenated aliphatic hydrocarbons, carboxylic acids and their derivatives, Li, HCN, As, CO_2, Fe, Ni, U, C_6 hydrocarbons	This stream should be controlled in new gasification facilities. Further characterization should be directed toward the control technique for this stream, *e.g.*, if the control device for this stream is combustion, then detailed chemical characterization around the combustor will be neccesary, along with bioassay tests of the resulting combustion products.
Coal Feeder Vent	4×10^7	8×10^5	Fused aromatic hydrocarbons and their derivatives, CO, Cr, C_2 hydrocarbons	Carboxylic acids and their derivatives, amines, sulfonic acids and sulfoxides, phenols, NH_3, Hg, U, V, heterocyclic nitrogen compounds	Methane, thiols, benzene and substituted benzene hydrocarbons, Al, P, As, H_2S, Cu, Cd, NO, CO_2, HCN, heterocyclic sulfur compounds	As for the separator vent stream, this stream should be controlled in new gasification facilities. Further characterization should be directed toward the control technique for this stream, *e.g.*, if this stream is to be controlled by combustion (flaring, incineration, etc.), then detailed chemical characterization around the combustion process would be necessary, along with bioassay tests of the combustion products.
Gasifier Ash	5×10^3	8×10^6	Be, P, Fe, Ca, Al, Li, Ba, Se, Pb, Cs, Cu, Ti, Cd, Sb, V, Co, U	Mg, Sr, Cr, Co, Si, Hg,	Zr, F, Rb, As	Even though the amount of extractable organics was low (~20 μg/g), certain organic constitutents may exist at levels exceeding their respective MATE values. Therefore, further analysis of this extract is recommended. The analysis should be directed specifically toward identifying specific organic species (*i.e.*, benzo-a-pyrene). The gasifier ash contained high concentrations of trace elements; however, the results of the bioassay tests indicated that the ash had a low potential for hazardous health or ecological effects. Leaching tests are recommended along with bioassay tests on the resulting leachate.
Cyclone Dust	2×10^3	8×10^6	Ni, Pb, P, Mn, Fe, Cu, Ba, Sb, Ti	Cr, Ca, Al, V	Li, Mg, Zr, Co, As, Si	As for the ash, further organic analysis is recommended for specific hazardous organic species in the extractable organics in the cyclone dust. Because of the high carbon content, the cyclone dust should be combusted or recycled to the gasifier. If the dust is to be landfilled, leaching tests and bioassay tests on the resulting leachate are recommended.

Table 1-16. RECOMMENDATIONS FOR FUTURE DATA NEEDS FOR POTENTIAL FUGITIVE EMISSIONS AND EFFLUENTS

Fugitive Emissions & Effluents	Total Stream Degree of Hazard: Health Concern	Total Stream Degree of Hazard: Ecological Concern	Stream Components Priority for Level 2 Chemical Analysis: High Priority Degree of Hazard 10^3 - 10^2	Medium Priority Degree of Hazard 10^2 - 10	Low Priority Degree of Hazard 10 - 1	Remarks & Recommendations
Raw Product Gas	4×10^8	8×10^6	Fused aromatic hydrocarbons and their derivatives, heterocyclic nitrogen compounds, Cr, CO, carboxylic acids and their derivatives, amines, sulfonic acids and sulfoxides, phenols, Hg, U, NH_3, V, C_2 hydrocarbons	Thiols, benzenes and substituted benzene hydrocarbons, Al, P, As, Cu, Cd, H_2S, CO_2, NO, HCN, methane, heterocyclic sulfur compounds	C_4 and C_5 hydrocarbons, heterocyclic oxygen compounds, Li, Tl, Si, Pb, Sb, SO_2, CS_2, Cl, Ti, Zr, Fe, Co, Ni, Ag, Zn	Sources of raw product gas fugitive emissions are primarily pokeholes and abnormal process operation. Because of the potentially hazardous nature of the raw product gas, control of pokehole emissions is required. This can be achieved by injecting an inert gas (steam or CO_2) into the pokehole during poking operations. Abnormal process operation (start-up, shutdown, upsets) may require directing the raw product gas to a flare or incinerator. Further chemical characterization around the flare or incinerator is needed along with bioassay tests of the resulting combustion products.
By-Product Tar	1×10^8	2×10^7	Fused aromatic hydrocarbons and their derivatives, phenols, amines, benzene and substituted benzene hydrocarbons, heterocyclic nitrogen and sulfur compounds, halogenated aliphatic hydrocarbons, carboxylic acids and their derivatives, Cu, Pb, Sb, aliphatic hydrocarbons, Cr, Cd	Ba	Heterocyclic oxygen compounds, Hg, V, Mg, As	The by-product tar was the most potentially toxic material found in this test. Potential fugitive effluents of tar may occur around pumps, flanges, and valves. These effluents must be contained. Good maintenance and material handling procedures are required.
Separator Liquor	3×10^5	2×10^5	Phenols, fused aromatic hydrocarbons and their derivatives, NH_3, CN^-, heterocyclic nitrogen compounds, P, carboxylic acids and their derivatives	Thiols, Se, glycols, and epoxides, As	Heterocyclic sulfur compounds, F, Cl, Ca, Fe, Cd	The bioassay tests for the separator liquor indicated a low potential for hazardous health effects, and a high potential for hazardous ecological effects. Fugitive effluents of the separator liquor may occur around pumps, valves, flanges, and surge tanks. These fugitive effluents should be contained. Any accumulation should be sealed in containers for disposal. Proper maintenance and handling practices should be implemented. Further chemical characterization of the separator liquor is recommended because of the inconsistency between the health MATE values and the health bioassay tests.

frequently became plugged with tar, which acted as a possible area for sorption of gaseous sulfur species. An alternate sampling system for collecting samples from tar/oil laden streams is recommended. This alternate system could include means for collection of tars and oils with an electrostatic precipitator.

(2) Additional cooling in the SASS train organic module was needed when sampling streams with high moisture content (such as the separator vent stream). This has been included in the new SASS train operating instructions.

(3) Relocation of the XAD-2 cartridge to a point downstream of the condenser in the SASS train module is recommended. Using this modification, condensable organics are collected in the condenser, while organic vapors are sorbed on the XAD-2 resin. This modification will also minimize overloading the XAD-2 resin with organics that have already condensed.

Analysis Methods -

Nitrogen oxides (NO_x) - An alternate method, such as EPA Method 7, is recommended for determining NO_x. This alternate method should be suitable for determination of a wide range of NO_x concentrations.

Ammonia and hydrogen cyanide - The gas chromatography technique specified by Level 1 was not sufficiently sensitive for determination of the low levels of NH_3 or HCN in the gas samples. NH_3 and HCN samples should be collected in impingers and analyzed by wet chemical methods when low concentration of these species are present.

Sulfur species - A modified gas chromatography technique using a Poropak QS column was used for analysis of sulfur species (H_2S, COS, CS_2, and SO_2) and was found to give the separation required for input data to control technology. However, problems were found with the Poropak QS packing because of its reactivity toward SO_2. Additional packed columns for separation of H_2S, COS, SO_2, and CS_2 have been evaluated. The

following have proved satisfactory for gas samples obtained from coal gasification facilities.

(1) 3% TCEP, 0.5% H_3PO_4 on mesh Carbopak B.

(2) 1% Carbowax 20 M, 0.5% H_3PO_4 on mesh Carbopak B.

Fixed gases - A Fisher Gas Partitioner is recommended to permit separation of nitrogen and oxygen and quantification of other species on a single sample injection.

Test kits - Test kits specified by Level 1 were found to give adequate results in most cases. However, results could not be obtained using these kits for the determination of nitrate, nitrite or hardness. Alternate methods for these tests should be established for liquid streams containing high levels of organic material.

Extraction techniques - The extraction techniques specified by Level 1 were found to be inadequate for extracting samples containing highly polar organic compounds. Alternate extraction procedures, using methylene chloride, ether and acidified ether, may be used to recover highly polar compounds.

Total chromatographable organics (TCO) - Problems arose in determining TCO's for most of the organic extracts. This was especially true when high amounts of organics were present. The resulting chromatograms were so complex that the integration techniques were unreliable.

Gravimetric analysis - Significant variations were observed in mass determinations when dilute and concentrated samples of an extract were analyzed gravimetrically. It is recommended that additional work be performed in order to determine the optimum mass range for such analyses.

SAM/1A analysis - The following recommendations concern the use of SAM/1A as a rapid screening technique in the assessment of potential health and ecological effects of waste streams.

(1) SAM/1A analyses should be used in conjunction with bioassay tests for rapid screening of the pollution potential of multimedia waste streams.

(2) SAM/1A may be used to determine, and prioritize if necessary, those compounds and waste streams that must be controlled and/or characterized further (Level 2 analyses).

(3) The results of a SAM/1A analysis of a waste stream can be affected by the "degree of hazard" of only a few components in the stream. Therefore, inexpensive "spot tests" for specific compounds with low MATE values (such as the test developed by EPA for benzo-a-pyrene) should be developed.

SECTION 2.0

PLANT DESCRIPTION

This section provides a brief description of the Chapman facility and a summary of the operating data which were collected during the test program.

2.1 PROCESS DESCRIPTION

The Chapman facility produces low-Btu gas which is used as a combustion fuel for process heaters. The facility is equipped with twelve operational Chapman gasifiers. However, current fuel demands are low and can be met by operating only two gasifiers at any specific time.

Three basic operations are used in the gasification plant: a) coal handling, b) gasification, and c) gas purification (particulate removal and gas quenching and scrubbing). Water (process condensate) treatment is also practiced. A block diagram of the operations used at this plant is presented in Figure 2-1. This diagram also shows the major air, water, and solid waste streams associated with each operation. In the following text, each of these operations and their respective waste streams are discussed in more detail.

2.1.1 Coal Handling

The coal handling operation at the facility consists of: a) delivery and storage of presized Virginia bituminous coal in hopper cars, b) conveying, and c) storing this coal in the gasifier feed hoppers. No coal grinding, crushing, sizing or drying operations are used at the plant site. Emission of coal dust is the only major environmental concern in this operation.

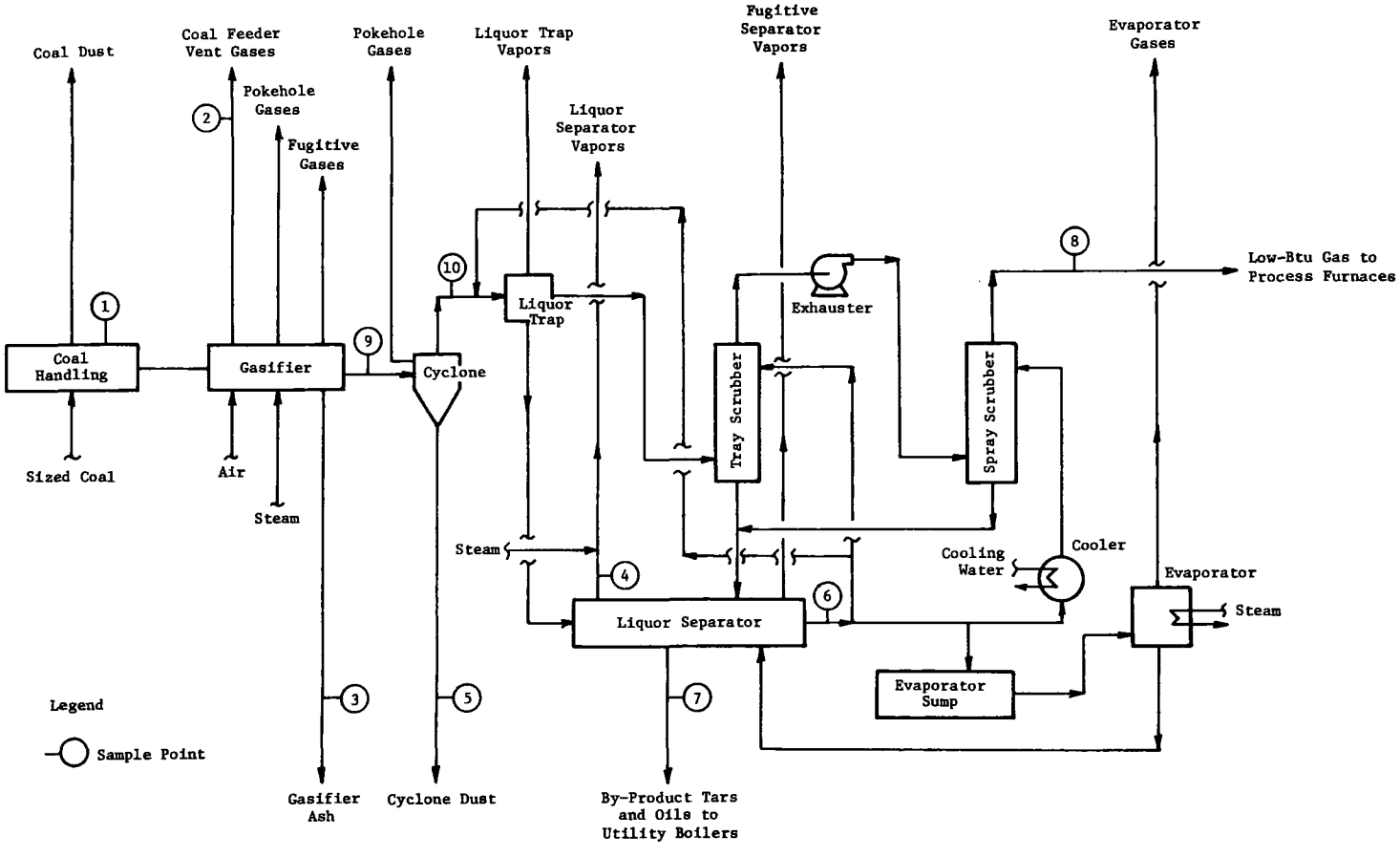

Figure 2-1. SIMPLIFIED PROCESS FLOW DIAGRAM FOR THE CHAPMAN FACILITY SHOWING EMISSION STREAMS

2.1.2 Gasification

The gas producers are single-stage, atmospheric, fixed-bed, air-blown Chapman gasifiers. The coal feedstock enters the top of each gasifier through a rotating feeder (barrel valve) and is spread across the bed by a distribution arm. Steam and air are introduced into the bottom of the gasifier and pass through a grate which distributes these gases evenly and also supports the coal bed. Ash from the gasifier is collected in a water-sealed ash pan and removed from the unit using an ash plow. The hot raw gas exits the top of the gasifier at 840-950°K (1050-1250°F) and enters a cyclone. Pokeholes located on top of the gasifier are opened periodically to permit the insertion of rods to break up any coal agglomerates which form in the gasifier. The rods are also used to check the depth of the bed in the gasifier.

Waste streams associated with the gas production operation are: a) gaseous emissions released to the atmosphere from the coal feeder valve, pokeholes, and leaks around the gasifier seals; and b) moist ash which exits the bottom of the gasifier. The ash is conveyed to a storage hopper and is trucked away periodically for disposal.

2.1.3 Gas Purification

The gas purification operation consists of two discrete steps: particulate removal and gas quenching and scrubbing, as described below.

Particulate Removal -

Particulate matter is removed from the hot, raw, low-Btu gas in refractory-lined cyclones that operate at a temperature slightly lower than the gasifier overhead temperature. Each gasifier at the Chapman facility is equipped with a cyclone The particulates removed by the cyclones consist of devolatilized coal dust, ash and tar entrained in the raw gas. The particulates collect at the bottom of the cyclones. Pokeholes are located on the top of each cyclone and in the inlet and outlet hot gas ducts to permit insertion of steam lances which are used to break up agglomerated particulates.

Gaseous waste streams from the cyclones consist of pokehole vent gases and leaks. The collected particulates, which constitute a solid waste stream, are combined with the gasifier ash for disposal.

Gas Quenching and Scrubbing -

The hot gas leaving the cyclones is quenched by spraying water into the exit lines from each cyclone. Excess quench water is collected in a liquor trap (one trap for each gasifier/cyclone), while the cooled gas from all operating gasifiers enters a collecting main. Water sprayed inside this main cools the gas to approximately 340°K (150°F). Tar and quench liquor from the liquor traps and the collecting main are sent to the liquor separator. Pitch (a lighter-than-water, tarry material) and agglomerated particulates which accumulate in the liquor traps are collected for periodic off-site disposal.

After the initial quenching step, the gas is cooled further by water in two tray scrubbers which are operated in parallel. Here, most of the tars, oils, and particulates are scrubbed from the gas as it is cooled to approximately 330°K (135°F).

The gases exiting the tray scrubbers are recombined and compressed before entering a spray scrubber. In the spray scrubber, some residual tars, oils, and particulates are removed as the gas is further cooled to about 320°K (120°F). The effluent scrubbing liquor from both the spray and tray scrubbers is sent to the liquor separator.

The liquor separator at the Chapman facility is a large concrete tank (5 x 12 x 2 meters, 16 x 40 x 6 feet). Process condensate and condensed tars and oils from the quenching/scrubbing steps enter at one end of the tank. A series of baffles minimizes the turbulence caused by the incoming liquor. The tars and oils settle to the bottom of the separator and are removed periodically for use as an auxiliary fuel in a coal-fired boiler. A portion of the water from the liquor separator is cooled in a set of cooling towers before being reused in the spray scrubber. The remainder of the water is recirculated to the other quenching and scrubbing steps.

The gaseous waste streams from the quenching and scrubbing processes include vapors from the liquor traps and the liquor separator. A second gaseous waste stream from the liquor separator is produced by a steam ejector which is used to purge the vapor space above the liquor in the separator. The liquid waste stream associated with this process is accumulated quench liquor which is sent to an evaporator for disposal.

2.1.4 Water Treatment

Water treatment problems are minimized at this gasification facility by operating the gasification process such that there is no net accumulation of water. Adjustment of the water content of the product gas may be made by regulating the amount of steam to the gasifier and also by adjusting the temperature of the clean product gas. If excess water (quench liquor) accumulates, it is directed to a set of evaporators. Emissions from this evaporation process should contain volatile materials found in the quench liquor.

2.1.5 Waste Stream Summary

Waste Stream Characterizations -

The waste streams from the Chapman facility are listed in Table 2-1. The streams sampled and analyzed by Radian are indicated with an asterisk. Criteria for selection of streams for sampling included accessibility, plant operation and potential for pollution. For example, process heater flue gas was not sampled because the heater was located in a restricted area. Evaporator vapors were not sampled because no spent quench liquor was sent to the evaporator during the test.

Table 2-1. MULTIMEDIA WASTE STREAMS AT THE CHAPMAN FACILITY

Gaseous Emissions

- Coal Feeder Vent Gases*
- Pokehole Gases
- Separator Vent Gases*
- Evaporator Vapors
- Process Heater Flue Gas
- Tar/coal Combustor Flue Gas

Liquid Effluents

- Spent Quench Liquor

Solid Wastes

- Gasifier Ash*
- Cyclone Dust*

* Indicates the waste streams sampled during the test program.

Potential Fugitive Emissions Characterizations -

The process streams in the Chapman facility are listed in Table 2-2. These streams, identified as potential sources of fugitive emissions and effluents, were sampled and analyzed as part of Radian's test. The data collected from the quench liquor and by-product tar is also valuable as an aid to the prediction of control technology and end-use requirements for similar streams in future facilities.

Table 2-2. SUMMARY OF PROCESS STREAMS IDENTIFIED AS POTENTIAL SOURCES OF FUGITIVE EMISSIONS AND EFFLUENTS

Gaseous Stream

- Raw Product Gas

Liquid Stream

- Recirculating Quench Liquor

Solid Stream

- By-Product Tar

2.2 PLANT OPERATION

The Chapman coal gasification facility operates 24 hours per day with a production rate determined by the fuel demand of the process heaters in an adjacent building. A single gasifier is capable of producing gas at a rate that will fire a minimum of two and a maximum of four heaters. During Radian's tests, five process heaters were fired by gas from two gasifiers. This indicates that the gasifiers were operating at approximately 60 percent of capacity.

Instrumentation for the gasifiers monitored the product gas exit temperature, the saturation temperature of the gasifier inlet air, and pressure drops across various segments of the gasifier. The gas cleaning system was instrumented with flow, temperature, and pressure indicators.

With the exception of the automatic fine adjustment of the combustion air flow rate, all operating parameters for the gasifier were controlled manually by the plant operators. These parameters included:

- coal feed rate,
- gasifier ash removal rate,
- depth of ash bed (location of fire zone), and
- temperature of the gas exiting the gasifier.

The techniques used by the various operators for control of the gasifiers varied slightly, but each produced gas of acceptable quality.

2.3 PROCESS FLOW RATE AND MASS BALANCE DETERMINATIONS

During the test program, process flow rate data were calculated for:

- coal feedstock,
- gasifier ash,

- product low-Btu gas,
- cyclone dust, and
- tars and oils.

Most of these data were collected at 8-hour intervals over a 48-hour period. Table 2-3 gives a summary of the average flow rates calculated for each stream. The following text describes the methods used to determine those flow rates.

Coal is fed to each gasifier through a device known as a barrel valve, which is described in Section 3.1.2. A revolution counter is attached to the shaft of each barrel valve. Readings were taken periodically from these counters. The weight of coal delivered per revolution was determined by filling each of the three cavities of an uninstalled barrel valve and then transferring the coal to a container for weighing. Based on several such weighings, an average value of 52 kg (115 lb) per revolution was obtained. Using this factor, the average coal feed rates to the No. 2 and No. 3 gasifiers were determined to be 0.139 kg/s (1030 lb/hr) and 0.175 kg/s (1390 lb/hr), respectively. It should be noted that the actual coal feed rate could be less due to material buildup in the barrel valve cavities.

Gasifier ash is removed from the gasifier and dumped into a hopper at the beginning of each shift. The ash level in the hopper was recorded and the volume of ash removed calculated. An ash sample was collected for moisture content and density determinations. Based on these factors, average mass flow rates of 0.0085 kg/s (68 lb/hr) and 0.010 kg/s (80 lb/hr) of dry gasifier ash were calculated for the No. 2 and No. 3 gasifiers, respectively. While the accuracy in determining the amount of ash removed per shift is considered good, the time averages calculated may contain considerable error since the amount of ash removed per shift is at the discretion of the gasifier operators. In fact, during the data acquisition period, ash was not removed at all on several shifts.

Product gas flow rates were obtained from the plant's instrumentation which consisted of an orifice meter and integrating flow recorder. For a 6-day period, the average gas flow rate was 0.871 Nm^3/s (1950 scfm). Raw product gas flow rate

Table 2-3. MASS BALANCE AROUND THE CHAPMAN GASIFICATION FACILITY

Stream Description	Flow Rate (kg/s)[a]		
	No. 2 Gasifier/ Cyclone	No. 3 Gasifier/ Cyclone	Total Facility
INPUT STREAMS			
Air	0.33*	0.44*	0.77
Steam	0.068*	0.092*	0.16
Coal Feed	0.129	0.175	0.304
TOTAL	0.527	0.707	1.234
OUTPUT STREAMS			
Gasifier Ash (dry)	0.0085	0.010	0.0185
Cyclone Dust	0.00067	0.00094	0.00161
Cooled Product Gas **	0.420*	0.569*	0.989
By-Product Tar	0.0129*	0.0175*	0.0304*
TOTAL	0.442	0.597	1.040
INPUT MINUS OUTPUT			
kg/s	0.085	0.11	0.19
% of INPUT	16	16	16

[a]Kg/s = 7938 lb/hr

* Back calculated by ratioing coal feed rate data.

** Based on gas molecular weight of 25.4.

measurements were also made at the No. 2 cyclone inlet and outlet during the cyclone characterization studies. These measurements indicated the average No. 2 cyclone inlet and outlet raw gas flow rates were 0.39 Nm^3/s (870 scfm).

The dust removed from each cyclone at the beginning of each shift was caught in large metal cans. The cans were weighed and the total weight of cyclone dust determined. The average mass flow rate of cyclone dust over the 48-hour period was 0.67 g/s (5.3 lb/hr) and 0.94 g/s (7.4 lb/hr) for No. 2 and No. 3 cyclones, respectively. Based on the grain loadings and flow rate data obtained during the cyclone characterization studies, the average cyclone dust flow rate for No. 2 cyclone was calculated to be 0.62 g/s (4.9 lb/hr).

The tars and oils which accumulate in the liquor separator are pumped to a storage tank when the tar reaches a depth of 0.6 m (25 in). Plant operators record tar levels in the separator before and after each pumping. The flow rate of tar calculated from these data was 0.25 m^3/hr (66 gal/hr). Assuming a specific gravity of 1.07, the mass flow rate of tar was determined to be 0.075 kg/s (590 lb/hr). This number is subject to a large degree of error due to uncertainties in the method of determining the tar level. Based on coal deliveries and tar firing records kept by plant personnel for the period May 1977 until August 1977, a tar flow rate equal to 10 percent of total coal deliveries is probably more accurate. Therefore, for an average coal feed rate of 0.304 kg/s (2410 lb/hr), the tar flow rate was assumed to be 0.0304 kg/s (241 lb/hr).

Flow rate measurements for the air and steam fed to the gasifiers were not readily obtainable during the sampling period. However, an approproximate air and steam flow rate was back-calculated. First, it was assumed that all of the N_2 in the product gas was brought into the system with the inlet air. This indicated that the inlet air mass flow rate was about 0.77 kg/s (6100 lb/hr). During Radian's tests, the inlet air/steam temperature was about 340°K (150°F). Assuming that the air was saturated at this temperature, the steam flow rate was calculated to be approximately 0.16 kg/s (1300 lb/hr).

SECTION 3.0

SAMPLING METHODOLOGY

A summary of the sample points and sampling methods selected for the Radian test of a Chapman coal gasification facility is presented in this section. The first part describes the locations of sampling points on each stream sampled and the general sampling access methods used. The second part describes specific sampling methods used for gaseous, liquid and solid streams.

Level 1 sampling procedures were selected for all waste and potential fugitive emission and effluent streams. Alternate methods were applied only where these methods failed. Particulate sampling for the cyclone efficiency test was performed using in-line alundum filters.

3.1 DESCRIPTION OF SAMPLING POINTS

The sample point locations for Radian's test program are indicated numerically in Figure 3.1. The following text gives a brief discussion of each sample point location.

3.1.1 Coal Feedstock (1)

Presized coal is transported to the gasification facility by rail car, dumped into an underground bin, and then conveyed to a hopper directly above the gasifiers. Typically, coal is unloaded from the rail cars during the day shift. The conveyer belt that transports the coal to the overhead hopper was stopped periodically and a "stopped-belt" coal sample was collected by a plant operator.

During the Radian test program, coal samples were collected and crushed by a plant operator every fifteen minutes during the unloading operation. In addition, uncrushed coal samples were collected for size analysis.

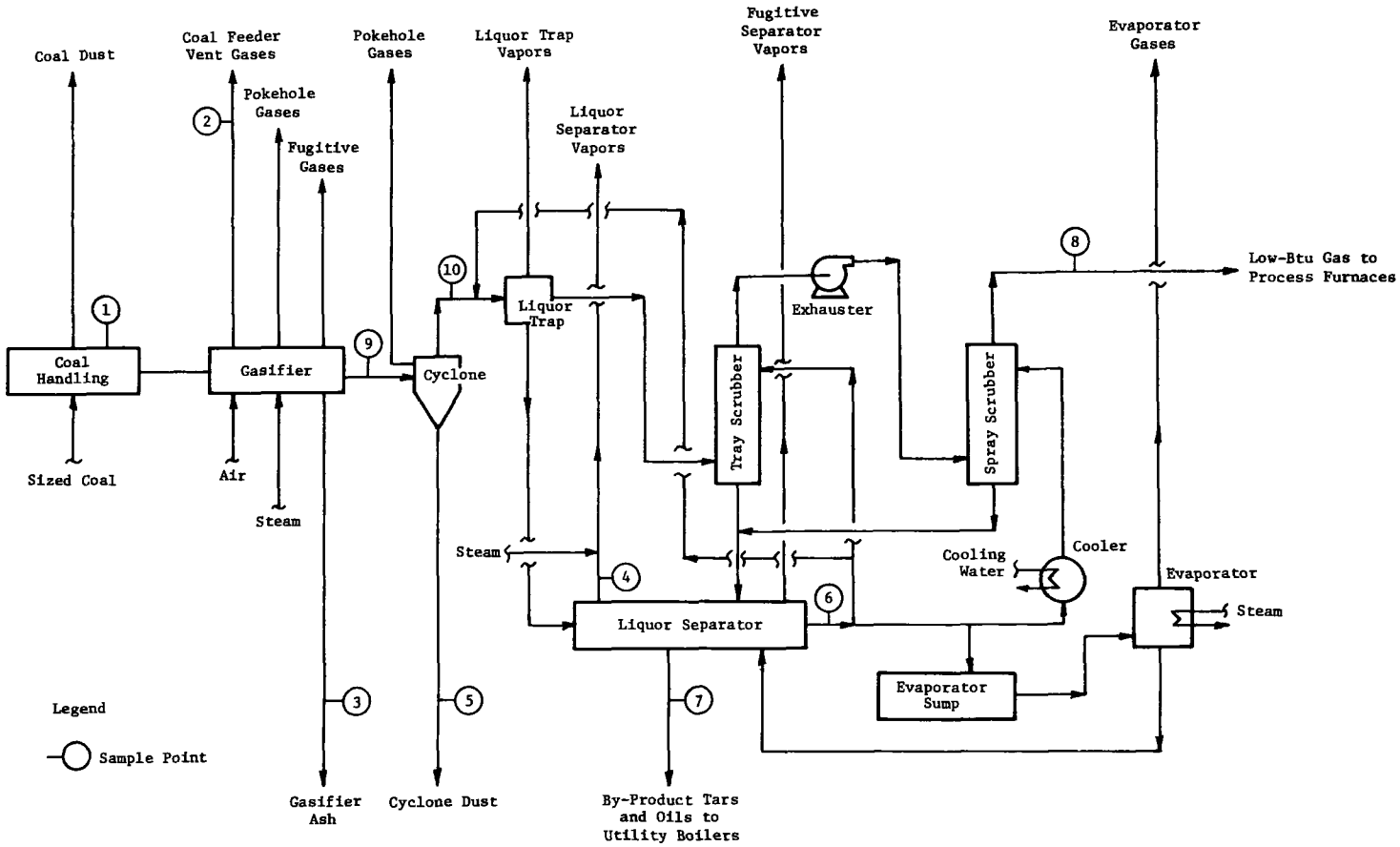

Figure 3-1. SIMPLIFIED PROCESS FLOW DIAGRAM FOR THE CHAPMAN FACILITY SHOWING WASTE AND PROCESS STREAMS AND SAMPLING POINTS

3.1.2 Coal Feeder Vent (2)

Coal is fed to the gasifier by a device known as a barrel valve. This device consists of a slightly tapered cylinder which has three recessed pockets in its surface. The cylinder rotates in a close fitting sleeve with a common horizontal axis. Coal enters the pockets in the cylinder from above and is dropped into the gasifier below as the cylinder rotates in the sleeve. Some product gas from the gasifier will usually leak past the barrel valve and into the coal feed chute. To minimize the amount of gas leakage into the coal storage bins, the chute is vented to the atmosphere. Due to a natural draft in the vent line, ambient air from an inspection hatch located above the barrel valve and, to a lesser extent, air from the coal storage bin, are also drawn into the vent. The barrel valve vent gas sampling port was installed in the 23 x 23 cm (9 x 9 in) vent at a point which was accessible from the roof of the producer building approximately 3.5 m (12 ft) above the barrel valve.

3.1.3 Gasifier Ash (3)

Ash is usually removed from the water-sealed ash pan once per shift. The quantity of ash removed is determined by the operator and is controlled by the number of rotations made by the ash pan during removal. The ash plowed from the pan falls into a hopper and then into a drag chain trough. The ash is conveyed to a storage silo and is hauled from the site daily by truck. All of the ash samples were collected as the ash entered the hopper of the No. 2 gasifier.

3.1.4 Separator Vent Gas (4)

Vapors above the liquor in the separator tank are purged to the atmosphere using a steam ejector. The height of the exhaust duct is about 23 m (75 ft). The separator vent gases were sampled from a 7.6 cm (3 in) port approximately 4.5 m (15 ft) from the top of the duct. Access to the sample port was from a catwalk servicing the top of the three product gas scrubbers.

3.1.5 Cyclone Dust (5)

Dust collected by the hot cyclone immediately downstream of the No. 2 gasifier is emptied once per shift into the same hopper used for the gasifier ash. Therefore, to preserve its integrity, the cyclone dust sample was collected in a large metal can placed inside the hopper. After collection, the can was removed from the hopper, covered, and the dust allowed to cool. When cool, the sample was transferred to sample storage containers. This procedure was necessary because the temperature of the cyclone dust was approximately the same as the hot product gas passing through the cyclone.

3.1.6 Raw Product Gas (10)

Raw product gas samples were obtained as the raw product gas passed vertically through the cyclone dust sleeve situated directly on top of the cyclone. (Figure 3-2). This sampling location was selected because quenching of the product gas begins close to the cyclone exit. Access to the gas at this location was made through a specially constructed packing gland which replaced the pokehole cover on top of the cyclone exit duct.

3.1.7 Clean Product Gas (8)

Clean product gas samples were collected through a valve located approximately 4.5 m (15 ft) downstream of the spray scrubber. The gas at this location had a positive pressure of approximately 7.5 KPa (30 inches H_2O) and a temperature of approximately 320°K (120°F).

3.1.8 Separator Liquor (6)

The hot product gas is both cooled and scrubbed of tars and oils by recirculated separator liquor. Separator liquor was sampled at the point where it entered the liquor trap of the No. 2 gasifier.

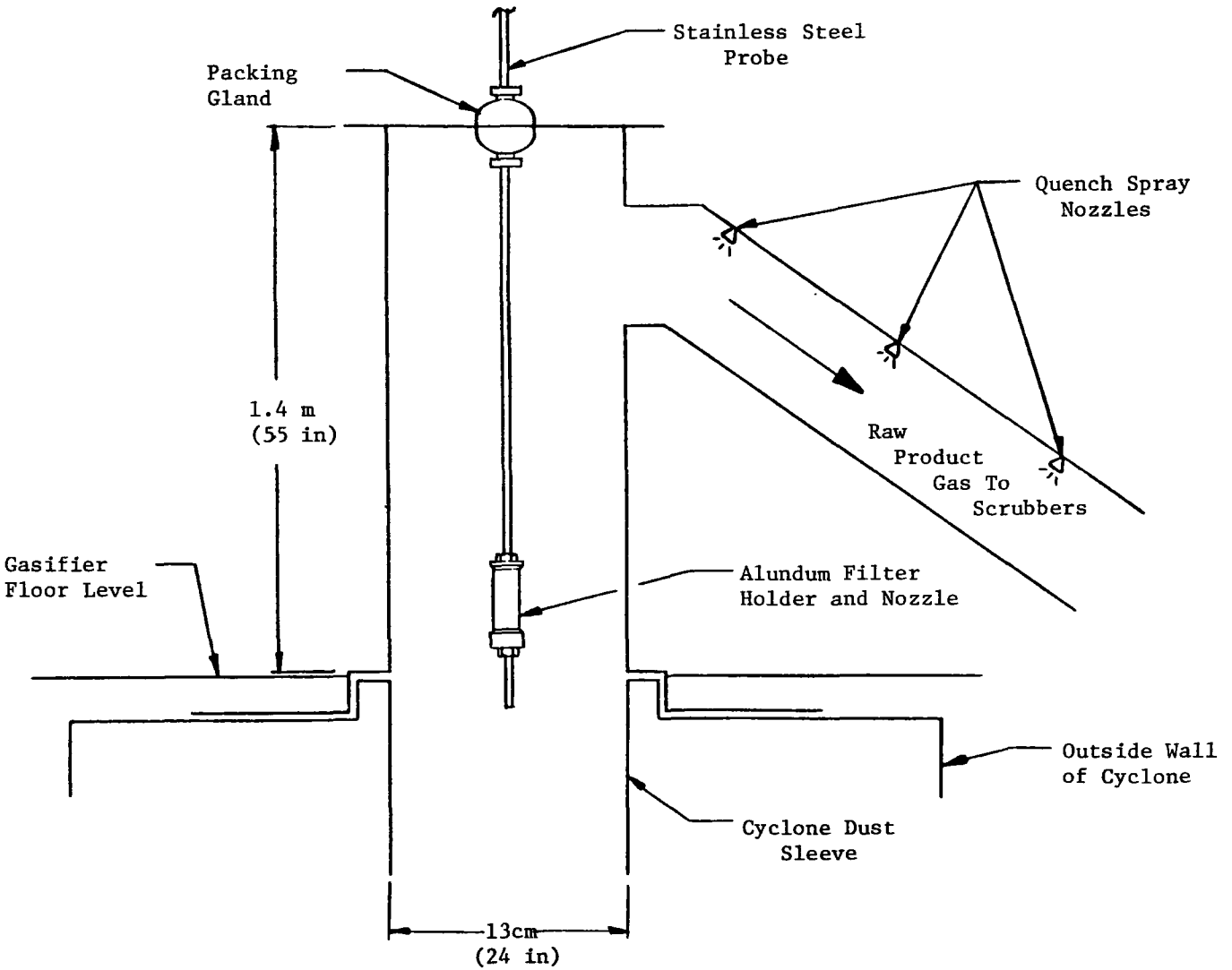

Figure 3-2. SCHEMATIC DIAGRAM OF SAMPLING ARRANGEMENT USED ON THE OUTLET OF THE CYCLONE

3.1.9 Tars and Oils (7)

Tars and oils are separated from the recycle quench liquor in a concrete separator tank. Samples of tar and oil, which settle to the bottom of the tank, were collected by lowering a "bailer" through the aqueous and tar layers to the floor of the liquor separator. The bailer was then retrieved, and the aqueous portion decanted. Additional samples of the tars and oils were obtained as they were pumped to a remote storage tank.

3.1.10 Cyclone Inlet and Outlet (9, 10)

Gas exiting the No. 2 gasifier was sampled in the transition ducting between the gasifier and the cyclone. A sample port was installed as shown in Figure 3-3. Access to the gas stream was made through a packing gland attached to the gate valve.

Outlet cyclone gas samples were obtained from the same sample port as the raw product gas samples.

3.2 SAMPLING METHODOLOGY

As stated in Section 1.0, the objectives of the Chapman gasifier test program were to:

- characterize the multimedia waste streams leaving the facility, using Level 1 sampling and analytical methodologies (Ref. 1),
- characterize the process streams in the facility which represented potential fugitive emissions, using Level 1 sampling and analytical methodologies,
- evaluate the particulate removal efficiency of the product gas cyclone, and
- evaluate the applicability of Level 1 sampling and analytical methodologies to determine their applicability to the waste streams from low-Btu gasification facilities.

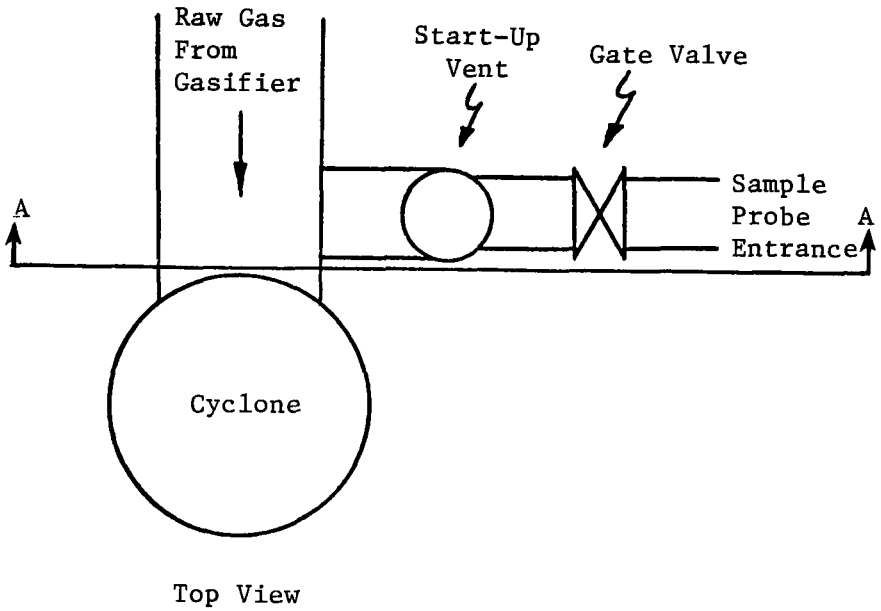

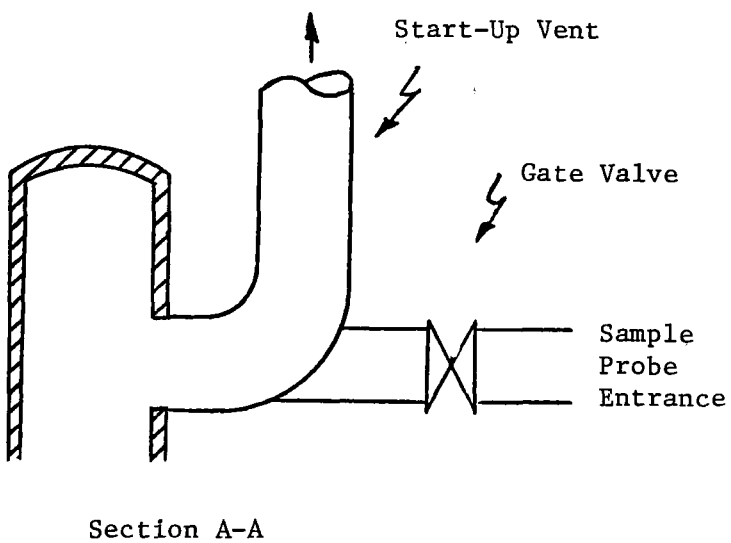

Figure 3-3. SCHEMATIC DIAGRAM OF CYCLONE INLET SAMPLE POINT

The methodologies used to obtain samples necessary to achieve these objectives are described in this section. In several cases, established sampling procedures were not applicable because of the characteristics of the streams. In such cases, modifications of equipment and procedures were made in order to obtain the desired type and quantity of sample. In other cases, alternative procedures were used to evaluate the applicability of EPA's Level 1 methodology to waste streams from coal gasification plants.

3.2.1 Waste Stream and Potential Fugitive Emission and Effluent Characterizations

EPA's Level 1 sampling procedures were used to collect samples for chemical and biological analyses. The sampling procedures described in the following sections are discussed according to the following stream sample classifications: gases with particulates, gaseous species, liquids, and solids. A summary of the samples taken during the test and the sampling schedule is presented in Table 3-1.

Gases With Particulates -

Gaseous emission streams which contained entrained particulate matter were sampled by using the high volume source assessment sampling system (SASS train) shown in Figure 3-4. A detailed description of this device and its operating parameters are given in the EPA Level 1 procedures document (Ref. 1). The two gaseous waste streams that were sampled using the SASS train were the coal feeder and the liquor separator vent gases.

Coal feeder vent gases - In addition to air, the coal feeder vent gases contained raw product gas that had leaked past the barrel valve. Preliminary velocity measurements made to determine the correct sampling rate and nozzle dimensions showed the gas velocity to be under 1.5 m/sec. In order to obtain approximately 28 m^3 of sample within a 5 hour sampling period (as recommended by Level 1 procedures), isokinetic sampling would have required an SASS train nozzle with a cross sectional area of about 60 cm^3. Since this was impractical, isokinetic sampling was not attempted and a sampling rate was selected which would give the required sample volume/sampling period as specified by Level 1 procedures.

Table 3-1. SAMPLING AND ON-SITE ANALYSIS SCHEDULE - CHAPMAN GASIFIER SOURCE TEST EVALUATION PROGRAM

	M 8/29		T 8/30		W 8/31		T 9/1		F 9/2		S 9/3		S 9/4		M 9/5		T 9/6		W 9/7	
	AM	PM	AM	PM	AM	PM	AM	PM	AM	PM	AM	PM	AM	PM	AM	PM	AM	PM	AM	PM
Spray Scrubber Outlet								x	x		x		x	xx	x	xx	x	x		
Fixed Gases		...																		
C_1-C_6		...																		
NO_x		..	.																	
Sulfur Gases	..	.																		
No. 2 Gasifier Barrel Valve Vent																				
Fixed Gases			..	...																
C_1-C_6				...																
NO_x			..	.																
Sulfur Gases			..	.																
SASS (Radian)			——																	
SASS (EPA)					——															
HCN										...										
NH_3										...										
No. 2 Gasifier Raw Product Gas															x		xx			
Particulate															..	..	..	..		
Fixed Gases					..															
C_1-C_6					...															
NO_x					..															
Sulfur Gases										..										
HCN																		..		
Separator Vent																				
Fixed Gases							.	...												
C_1-C_6								..												
NO_x							.	...												
Sulfur Gases							.	..												
SASS (Radian)											——									
SASS (EPA)							——													
HCN									...											
NH_3										...										
Coal								x	x		x		x	xx	x	xx	x	x		
Tar				.				x		x		x		x		x	....	x		
Separator Liquor				.				.	.								....	....		
Producer Ash									.					x	x	xx	.	x		
Cyclone Ash					.									x	x	xx .	x	x		.
Pitch																.				.

——: Sampling interval for the SASS train

. · Grab Sample

x · Flowrate measurement

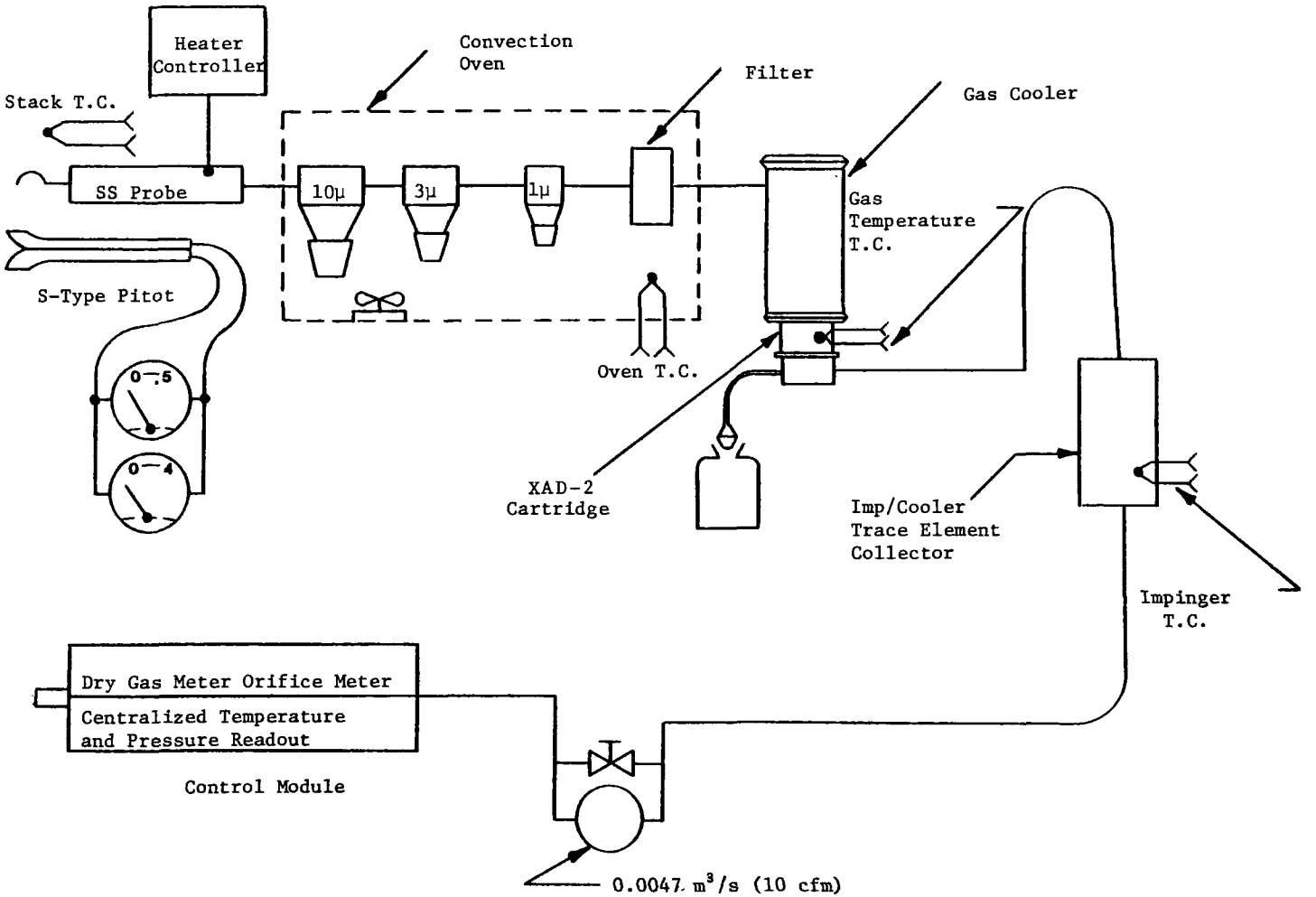

Figure 3-4. SOURCE ASSESSMENT SAMPLING SCHEMATIC

Several problems were encountered in using the Level 1 procedures to sample the coal feeder vent gases, as follows.

- The curved portion of the nozzle became plugged by condensed tars.
- The condensed tar particulates became fluid after entering the heated probe and cyclone assembly.
- The tars that passed through the cyclones formed a viscous mat on the filter.

As a result of these problems, fluidized tar passed from the cyclone section and lodged on the filter, which then had to be changed every 20 minutes.

To minimize nozzle plugging and to increase the time interval between filter changes, the following procedure modifications were made.

- The goose-neck nozzle was replaced with a straight nozzle.
- The oven heater was turned off and the main oven door left open.

With these modifications, a larger portion of the tar was collected in the cyclones and the tar collected on the filter remained solid. This increased the time interval between filter changes from 20 minutes to 60-120 minutes.

Separator vent gases - EPA Level 1 procedures were used with only one modification in sampling the separator vent gas. Because of the high moisture content of this stream (∿40%), the cooling capacity of the SASS train organic module was exceeded. The problem was resolved by adding an additional pump to the system. The additional pump circulated ice water through the inner cooling jacket of the organic module, while the original pump maintained ice water circulation through the outer jacket. The organic module exit temperature was controlled by manual adjustment of the cooling water flow rate. The lowest gas temperature obtained in the organic module was 293°K (68°F).

The probe temperature thermocouple failed while sampling the separator vent stack, thus making the automatic controller for the probe heating system inoperable. To avoid terminating the run, a thermocouple was placed inside the probe case and the probe heating system was controlled manually.

Sample recovery - Upon completion of each SASS train run, the system was disassembled into four sections: probe and nozzle, cyclones and filter, organic module, and impingers. The entrance and exit of each section were covered with aluminum foil which had been cleaned with methylene chloride. The train was not disassembled further until the samples were recovered in the mobile lab.

No particulates were recovered from the probe or the cyclones on the SASS run at the coal feeder vent because the material collected upstream of the filter was a very viscous tar which coated any particulates present. After the coal feeder run was completed, the probe was found to be completely plugged with tar. To recover this material, the probe was heated and a rod was used to remove most of the softened tar. The remaining tar was recovered using a CH_2Cl_2 solvent rinse and a brass bristle brush. Solvent rinses were used to recover the tar collected on the cyclones and connecting tubing. The rinses from the probe and nozzle were kept separate from the cyclone rinses.

Gaseous Species -

Samples for gas analysis were collected at the coal feeder vent, the separator vent, the cyclone outlet (raw product gas), and the spray scrubber outlet (clean product gas). The species sought were C_1 through C_6 hydrocarbons, NO, NO_x, H_2S, SO_2, CS_2, COS, HCN, NH_3, and major (fixed) gases (CO, H_2, CO_2, N_2, O_2, CH_4). The analytical techniques used are described in Section 4.0.

Level 1 methodology specifies collection of gas samples directly into a glass bomb or Teflon bag, with no conditioning or pretreatment. This method was found to yield analytical values which were much lower than those obtained using what appear to be more reasonable methods.

An alternate sampling system which was used for collection of gas samples from gaseous streams consisted of the following components:

- heated sampling probe,
- heated Teflon membrane filter (0.5μ),
- heated permeation gas drier,
- pump, and
- sample container.

The system is shown schematically in Figure 3-5. The Teflon membrane filter provided an inert medium for removal of tars and oils and protection of the permeation drier, which was used to remove water vapor from the gas sample. (Residual water vapor in the sample could condense on the walls of the sample container and sorb or react with gaseous species in the sample.) The drier was heated to prevent condensation of water vapor on the membrane walls. With the exception of the proprietary inert membrane in the drier, all components of the sampling system which came in contact with the gas stream were constructed of stainless steel, glass or Teflon.

The sampling system, described above, also has two optional modules (in-line filter and water trap) that were required when sampling the raw product and separator vent gases. An in-line alundum filter was used to remove entrained particulates and tars while sampling the raw product gas. A cold water trap was placed in the system upstream of the Teflon filter while collecting samples from the separator vent stream because of the high moisture content of that stream.

Frequent membrane filter changes were necessary due to the high tar and oil content of some gas streams. It was noted from the results of the on-site analyses that the concentration of some sulfur species in the gas stream appeared higher when the filter was torn than when the filter was intact. Therefore, it is possible that some of the sulfur species were either sorbed by or reacted with the tar on the filter media.

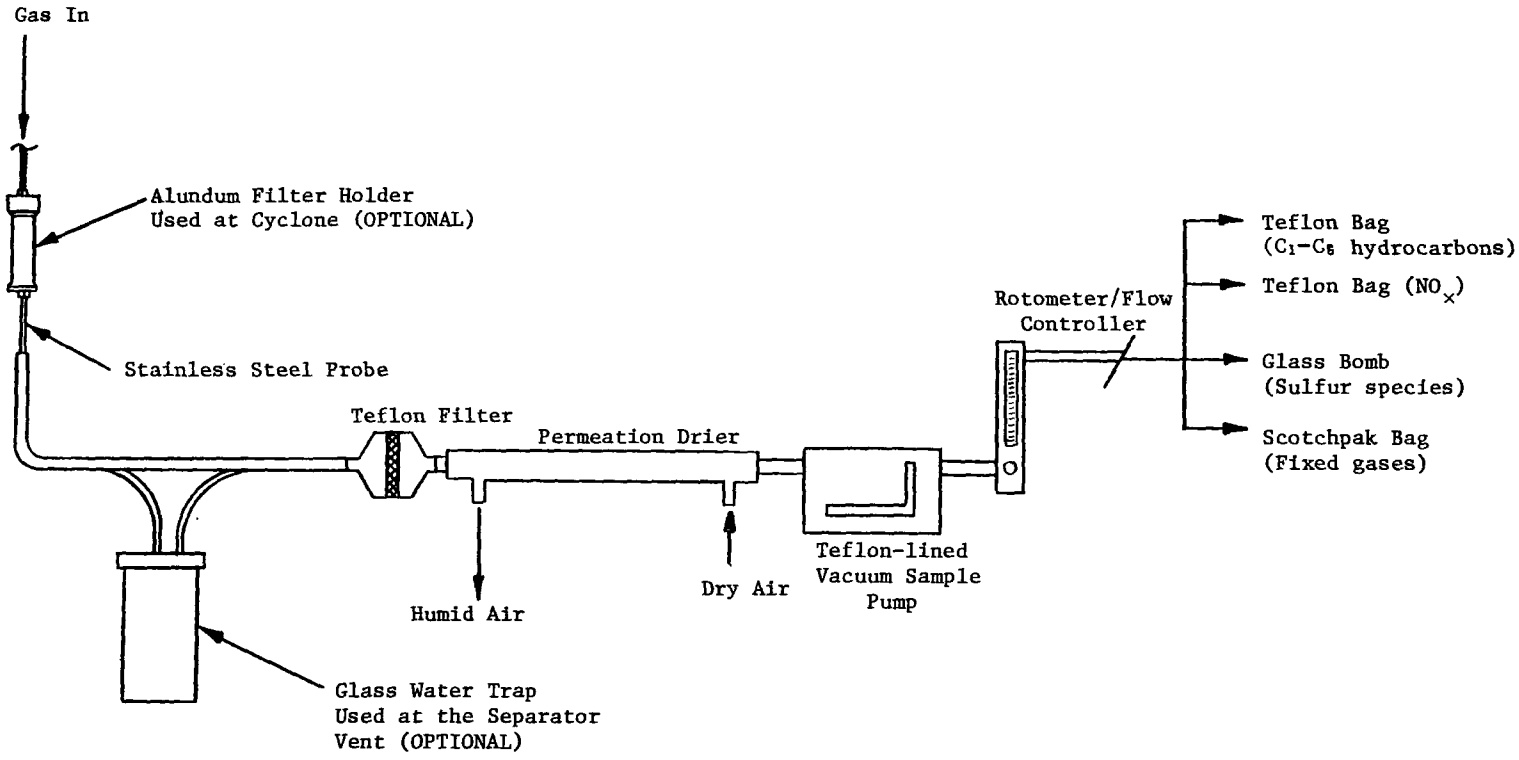

Figure 3-5. GRAB SAMPLE COLLECTION AND PREPARATION SYSTEM

The sampling train was well purged prior to filling the sample container. All containers were purged with a minimum of five sample volumes prior to sample collection. Teflon bags with stainless steel valves were used for hydrocarbon and NO_x samples, polyethylene bags with stainless steel valves for fixed gases, and glass bombs for sulfur species.

Gas chromatography is the recommended Level 1 procedure for measuring HCN and NH_3 in gaseous streams. However, the concentrations of these gaseous species were usually below the detection limits of the instrument. Therefore, samples for HCN and NH_3 analysis were collected using an EPA Method 5 train (as shown in Figure 3-6). Samples were collected from single points in the coal feeder and separator vent lines. The impinger solutions used were 0.1 N NaOH for HCN collection, and 0.1 N H_2SO_4 for NH_3 collection. The first two impingers in each train contained 250 cm^3 of the collecting solution, the third impinger was dry, and the fourth contained preweighed silica gel. Gas was passed through the train at a rate of 14 ℓ/min (0.5 cfm) for 20 minutes. Three sampling runs were made at the coal feeder vent and separator vent sampling points for each gas. At the completion of sampling, the impinger solutions were transferred to polyethylene bottles. The probe and glassware washings and filters were also retained for possible analysis.

A gas sample from the coal feeder vent was also collected for a biological screening test (plant stress ethylene test). This test required 1.36 m^3 of unfiltered sample. The gas samples for this test were collected in large Tedlar bags housed in 55-gallon fiber drums.

The Tedlar bags were first evacuated. Then the gas sample was introduced through a Teflon tube attached to the bulkhead fitting in the drum lid. The bags were filled at a rate of 8 to 14 ℓ/min. After filling, the bags were sealed and the containers prepared for shipment. A total of 10 drums were filled in this manner.

Liquids -

The only liquid samples collected during the test were from the recirculating quench liquor. In the gasification plant, separator liquor is allowed to flow continuously through the separator liquor transfer line to the pitch trap to prevent the line from becoming plugged. The separator liquor was sampled at

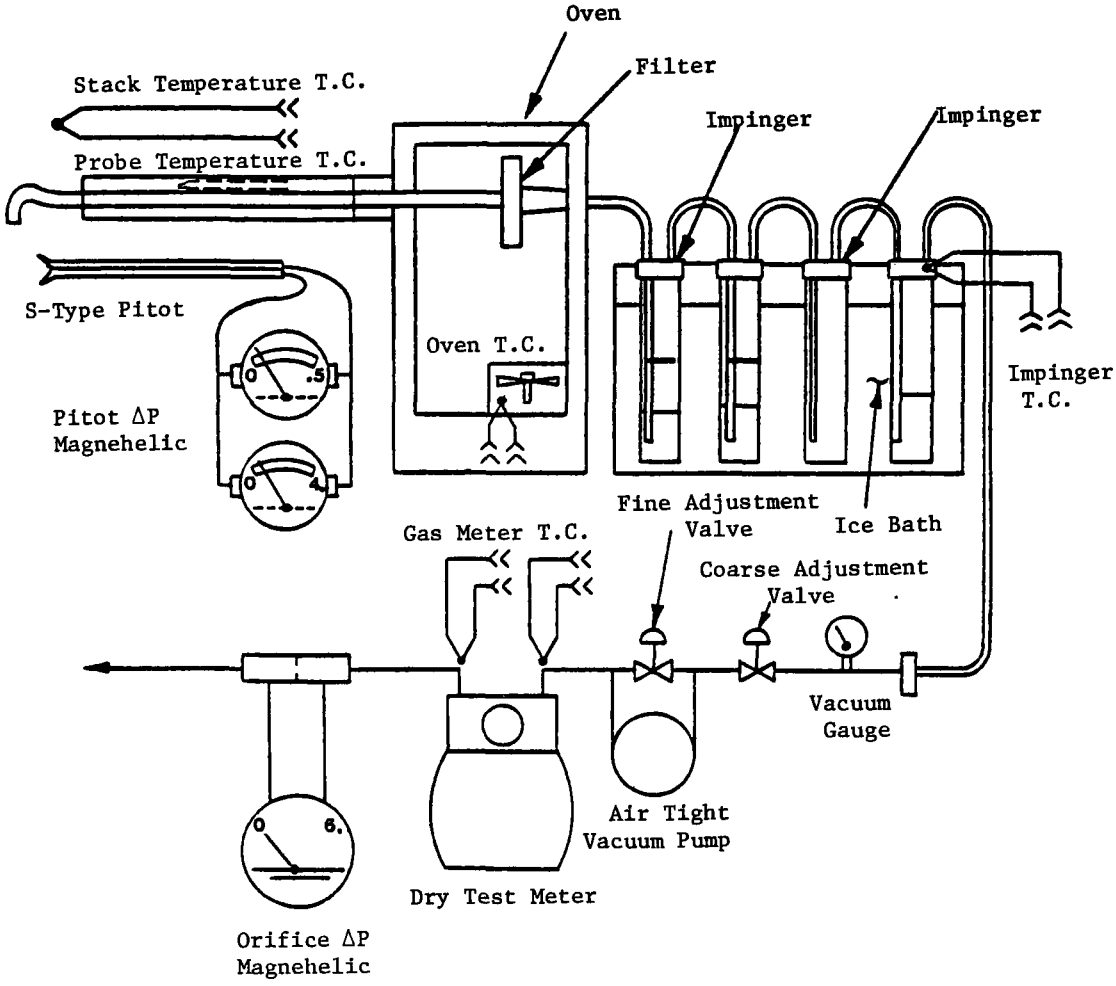

Figure 3-6. SCHEMATIC OF THE EPA METHOD 5 SAMPLING TRAIN

the outfall of this line. The samples for organic analyses were collected and stored in Teflon and glass containers. In addition, approximately 2.5 m^3 (85 gallons) of sample were collected for other analytical and bioassay tests. These large volume samples were collected in polyethylene carboys and in a 55-gallon drum with a polyethylene liner.

Solids -

As part of the source test evaluation of the Chapman facility, samples of coal, cyclone dust, gasifier ash, and tar were collected. The locations of each of these sample points were specified in Section 3.1.

Coal samples were collected routinely by plant personnel using the "stopped-belt" technique as coal was transferred from rail cars to the coal storage bins. Except for the coal collected for size analysis, all samples were splits from samples which were crushed to minus one-quarter mesh and riffled to proper volume.

The gasifier ash was collected at the ash plow. A stainless steel scoop was used for transfer of the ash to the Teflon and polyethylene bottles. Effort was made to obtain a representative sample by collecting ash from several points around the ash plow and hopper. However, the sample collected for moisture content determination was recovered from ash directly above the plow.

Cyclone dust was dumped into the gasifier ash hopper once per shift. With the cooperation of plant personnel, the following collection method was used. A large metal can was placed in the hopper directly under the cyclone dust discharge chute. The hot cyclone dust ($\sim$800°K) was then emptied into the can. The metal can was covered and the hot sample was allowed to cool. Appropriate quantities of cooled sample were then transferred to bottles for storage.

The separator tar samples were collected by lowering a "bailer" through the aqueous and tar layers in the separator tank. The bailer was then retrieved, and the aqueous portion was decanted. Additional samples of the tar were collected as it was pumped to a remote storage tank.

3.2.2 Cyclone Particulate Removal Efficiency Study

Each gasifier at the Chapman facility is equipped with its own refractory-lined cyclone. Particulates removed by the cyclones consist of devolatilized coal dust, ash, and tar entrained in the product gas stream. Particulate concentration (grain loading) data for particulate removal efficiency calculations were obtained at the inlet and outlet of a cyclone. Figure 3-7 illustrates the sampling train used to collect particulates. The sampling train consisted of a stainless steel probe fitted with an alundum thimble holder, sample transfer lines, three impingers, and pumping and metering equipment. Particulate matter was collected on a preweighed alundum thimble placed in the thimble holder. Impinger solutions were used to protect the pump. These solutions consisted of various collecting media: deionized water; tetrahydronaphthalene; or toluene. The first two impingers contained 250 cm^3 of impinger solution while the third was dry. Silica gel was eliminated from the sampling train because it was found that organic compounds which collected on the silica gel plugged the train within minutes.

The inlet of the cyclone was accessible through a 10 cm (4 in) gate valve (Figure 3-8), while the exit of the cyclone was accessible through a pokehole on top of the cyclone (refer to Figure 3-2). Prior to sampling, the velocity of the gas stream was determined. A seven point velocity traverse using an S-type pitot was made on the inlet, while a five point velocity traverse using a standard pitot was made on the outlet. The resulting velocity profiles are given in Figure 3-9. The data in Figure 3-9 for the cyclone inlet are averages of two separate measurements. After the cyclone velocity was determined, required nozzle size and isokinetic sampling rates were calculated.

At the start of each sampling run, the sampling probes and alundum thimble holders were positioned properly in the cyclone. The thimble holder was allowed to warm up to the cyclone temperature prior to sample collection to minimize condensation of tars and oils in the thimble. Particulate samples were collected isokinetically for periods ranging from 30 to 60 minutes. After sampling, the thimble holder was removed from the stack and a piece of aluminum foil was placed over the nozzle to prevent entry of air and eliminate the possibility of autocombustion in the thimble.

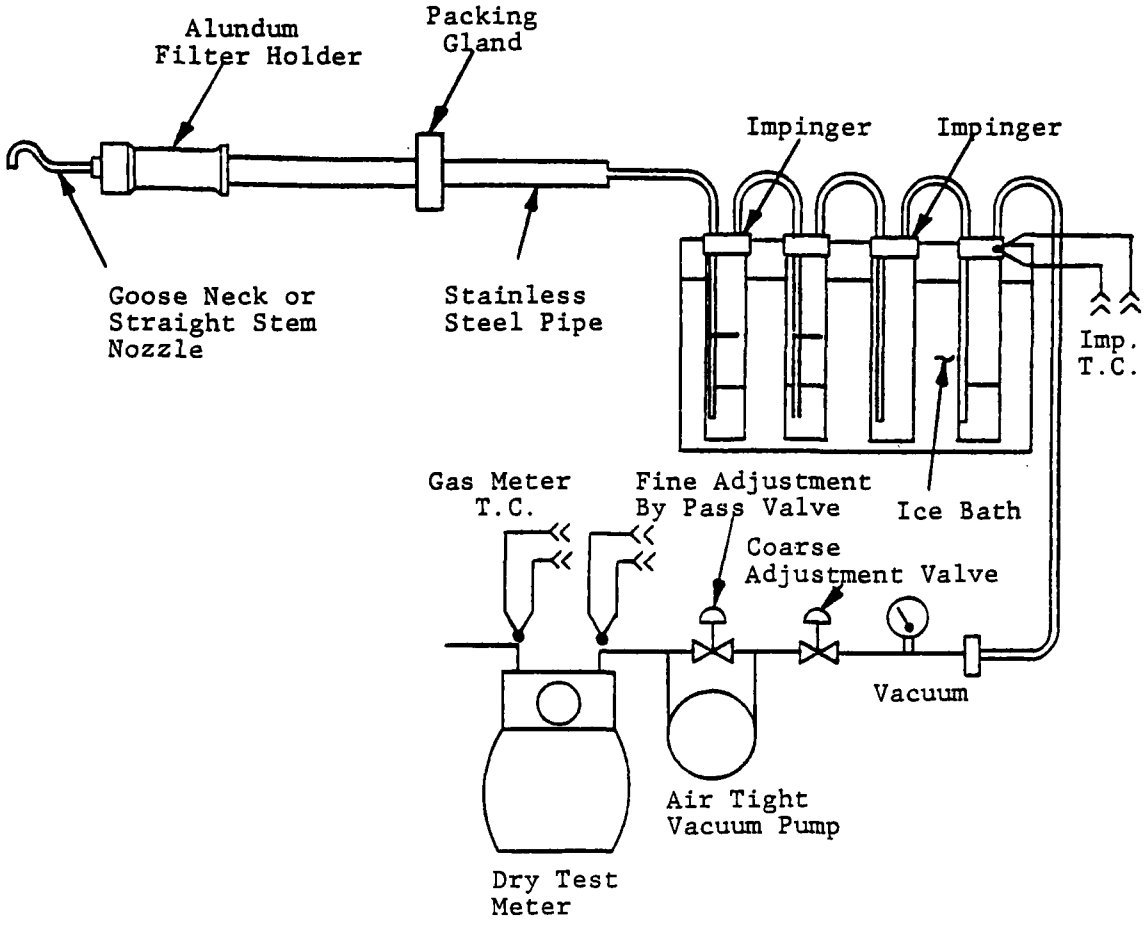

Figure 3-7. SCHEMATIC DIAGRAM OF PARTICULATE SAMPLING TRAIN USED AT THE CYCLONE

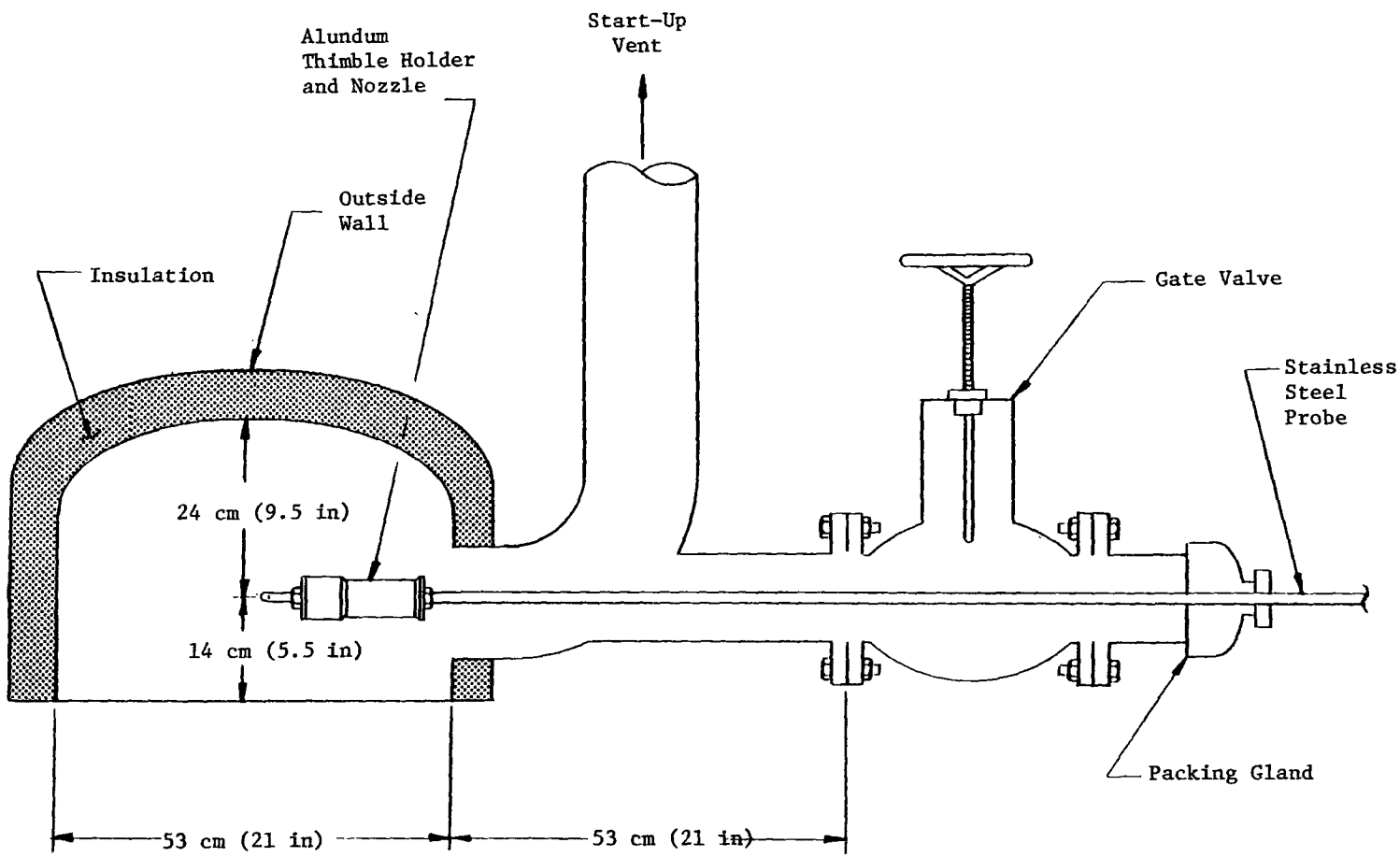

Figure 3-8. SCHEMATIC DIAGRAM OF SAMPLING ARRANGEMENT USED ON THE INLET OF THE CYCLONE

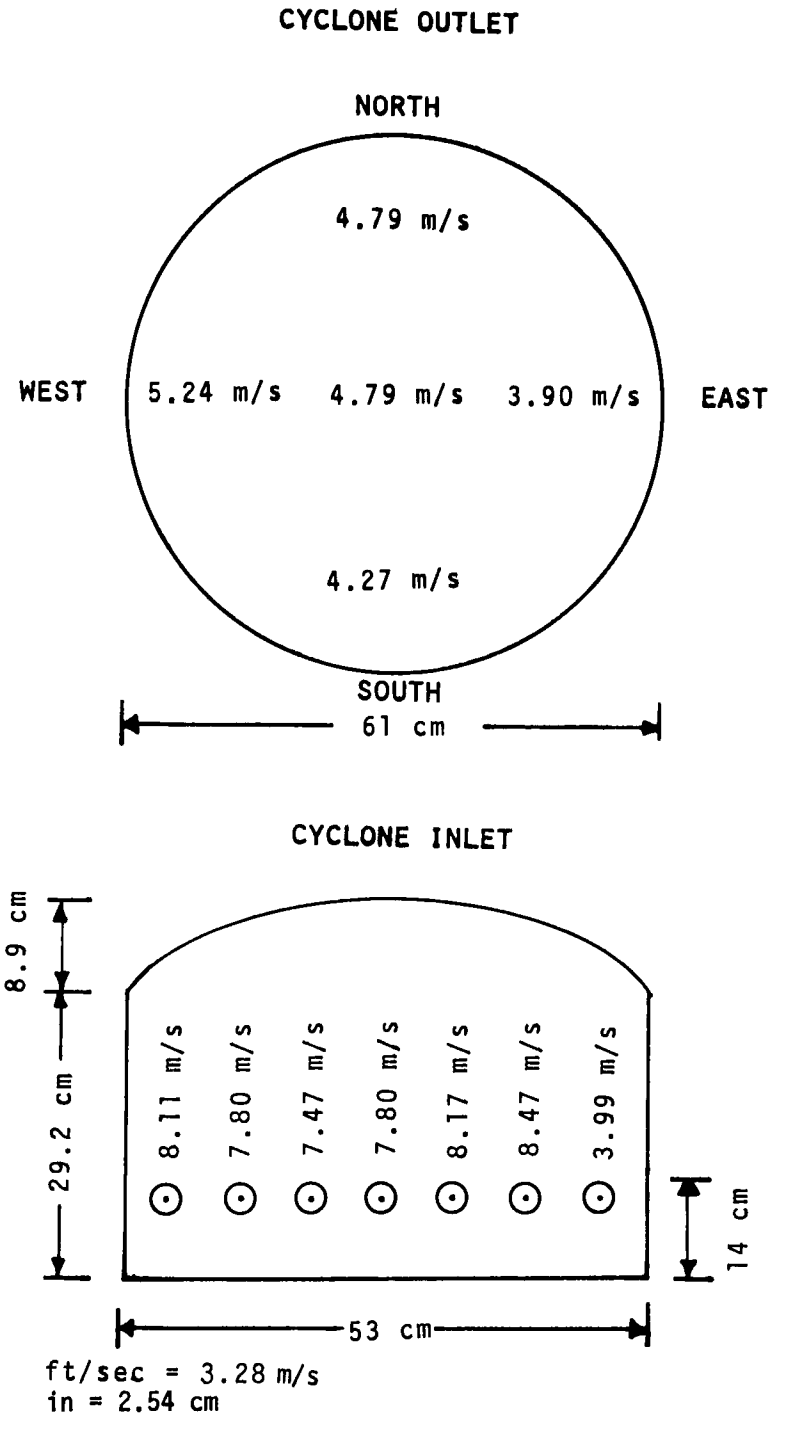

Figure 3-9. VELOCITY PROFILE AT THE INLET AND OUTLET OF THE CYCLONE

When the sampling equipment had cooled, the thimbles were carefully removed and placed in plastic bags for storage. The stainless steel probe and transfer lines were cleaned of condensed organic matter. The impinger solutions, along with any organic material which condensed in the impingers were stored in polyethylene bottles.

Three impinger solutions were evaluated to determine which was more efficient in removing organic matterial from the gas stream: deionized water, tetrahydronaphthalene, and toluene.

With deionized water, most of the organic material condensed on the glassware above the liquid level. However, the organic material in the stream was not all removed by the H_2O impingers, as evidenced by small amounts of organic material that collected on the inside walls of the tubing leading from the impingers to the pump. A considerable amount of methylene chloride and/or acetone was required for removal of the organic matter from the impingers.

When tetrahydronaphthalene and toluene were used, most of the organic material that condensed out of the gas remained in the collection fluid. As a result, it was easier to remove the organic material condensed in the impingers. There was also a reduction in the amount of organic material that collected on the inside walls of the tubing leading from the impingers to the pump.

3.2.3 Samples for Additional Characterizations

One of the objectives of the test program at the Chapman facility was the evaluation of the applicability of Level 1 procedures to environmental testing at coal gasification plants. Also, in some cases it was considered desirable to collect additional data that would not be provided by Level 1 testing. The additional data were collected using modified Level 1 and/or additional sampling and analytical methods. The results of these extra tests are presented in a separate report. The major variations from Level 1 sampling procedures were the modified SASS train runs on the coal feeder vent gases and on the separator vent gases.

In these SASS train runs, the procedure used for preparing and handling the XAD-2 resin differed substantially from that specified in Level 1. Principally, the modification involved

washing the resin with water, methanol, pyridine, and ether and storing the resin in methanol prior to the run. This was done to give lower baseline or "blank" values for the resin and also because it improved the physical handling characteristics of the resin. Another modification to the Level 1 procedure involved placing the XAD-2 canister at the exit of the organic module, which minimized condensation problems in the canister.

SECTION 4.0

ANALYTICAL PROCEDURES

The analytical strategies and methodologies used in the Chapman gasifier test program followed closely those described in the Level 1 procedures manual (Ref. 1). However, modifications and additions were made to some of the procedures to correct identified analytical inadequacies and in compensation for unusal sample conditions encountered. The analytical effort was conducted in two parts.

- On-site analyses in Radian's mobile laboratory
  1) Gas phase samples
  2) Aqueous samples for water quality parameters
- Off-site analyses at Radian's Austin laboratories
  1) Elemental composition
  2) Selected inorganic species
  3) Water quality parameters
  4) Organic extractions, separations and analyses

Table 4-1 summarizes the Level 1 analyses performed on each of the streams sampled at the test site. The overall analytical schemes used for each sample are shown in Figures 4-1 through 4-6. As indicated in these figures, analyses outside the Level 1 procedures were performed on some of the samples. The results of these analyses and an evaluation of their comparability with Level 1 results are contained in a separate document.

Table 4-1. SUMMARY OF ANALYSES PERFORMED

Analysis	Coal	Barrel Valve Vent Gases	Gasifier Ash	Separator Vent Gases	Cyclone Dust	Separator Liquor	Tar	Producer Gas
Elemental								
by SSMS and AA		x	x	+	x	x	x	
Proximate/Ultimate	x		x		x			
Water Quality Parameter								
Color						x		
Conductivity						x		
pH				+		x		
COD				+		x		
BOD				+		x		
TDS				+		x		
TSS				+		x		
DO						x		
Odor						x		
Alkalinity				+		x		
Acidity				+		x		
NH_3				+		x		
$CO_3^=$						x		
Cl^-				+		x		
CN^-				+		x		
F^-				+		x		
Hardness						x		
NO_3^-				+		x		
NO_2^-				+		x		
$SO_4^=$				+		x		
$S^=$				+		x		
SCN				+		x		
Gases								
CO_2		x		x				x
N_2		x		x				x
H_2		x		x				x
CH_4		x		x				x
CO		x		x				x
O_2		x		x				x
NO/NO_x		x		x				x
$H_2S/COS/CS_2/SO_2$		x		x				x
NH_3		x		x				
HCN		x		x				x
HSCN		x		x				x
HF		x		x				
HCl		x		x				
C_1-C_6		x		x				x
Organics								
Level 1		x	✓	x	✓	x	✓	
Bioassay	x	x/✓	x	✓	x	x	x	

+ Analysis performed on condensate

✓ Analysis performed on extract

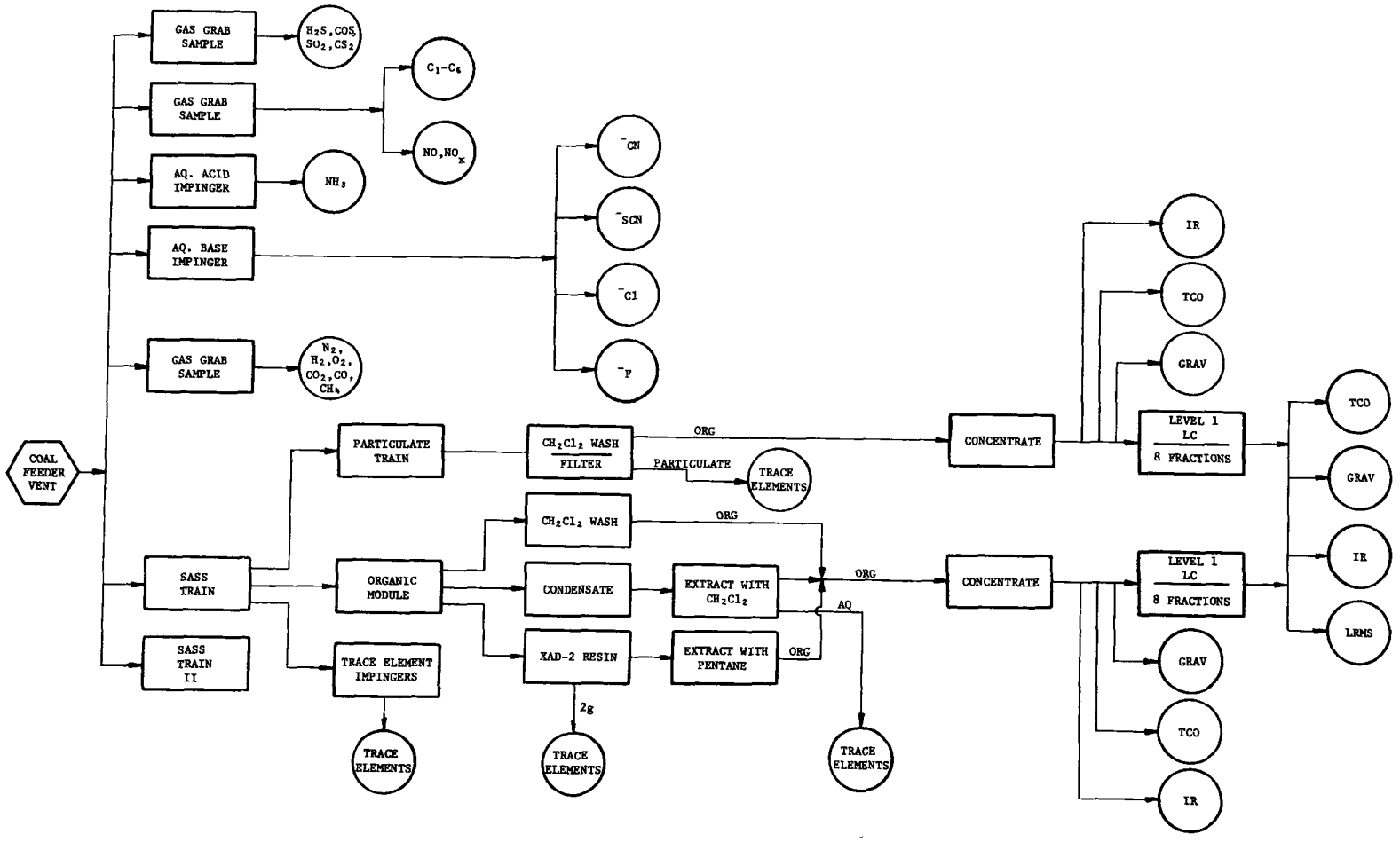

Figure 4-1. ANALYTICAL FLOW SCHEME FOR COAL FEEDER VENT GASES

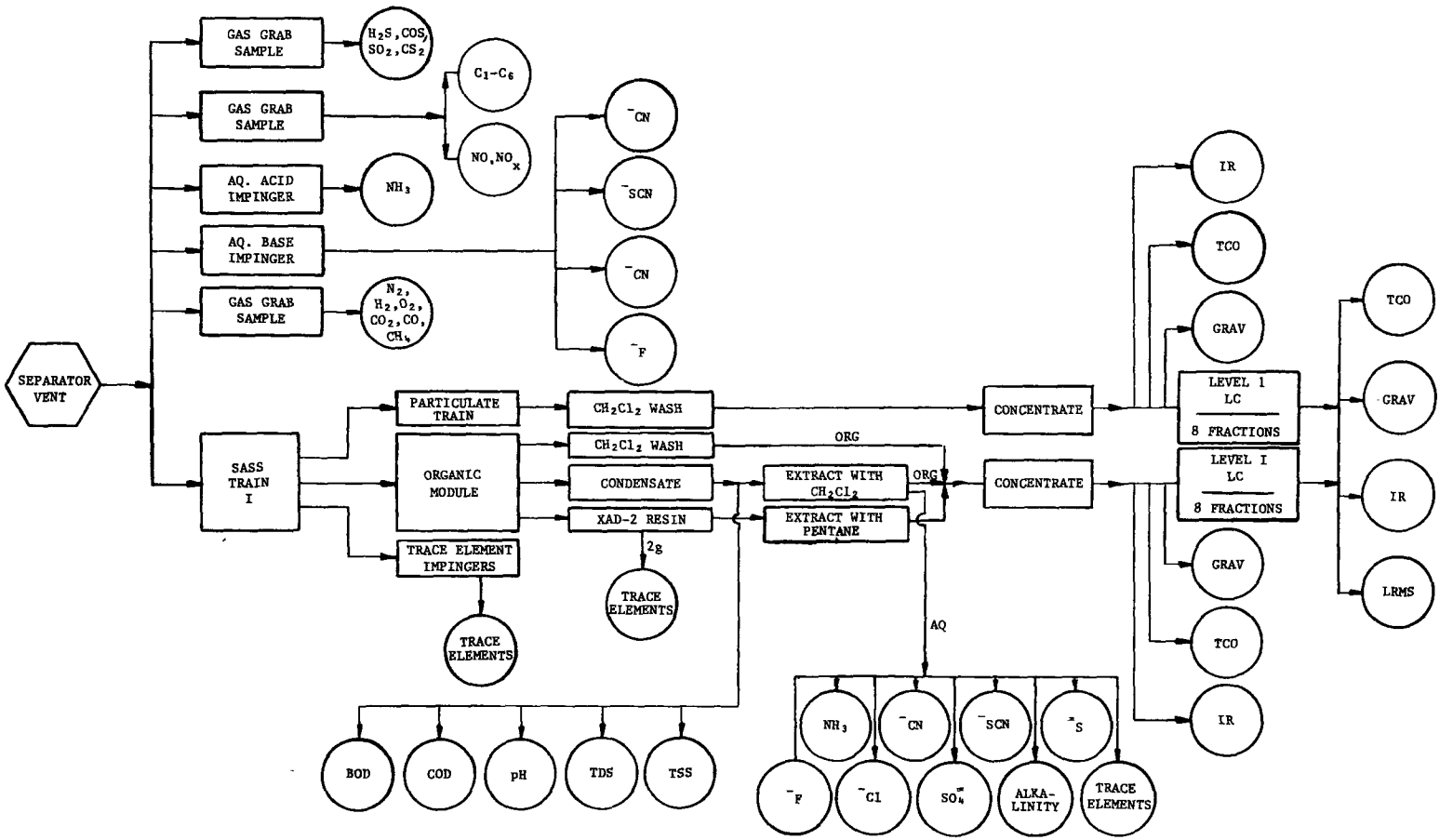

Figure 4-2. ANALYTICAL FLOW SCHEME FOR SEPARATOR VENT GASES

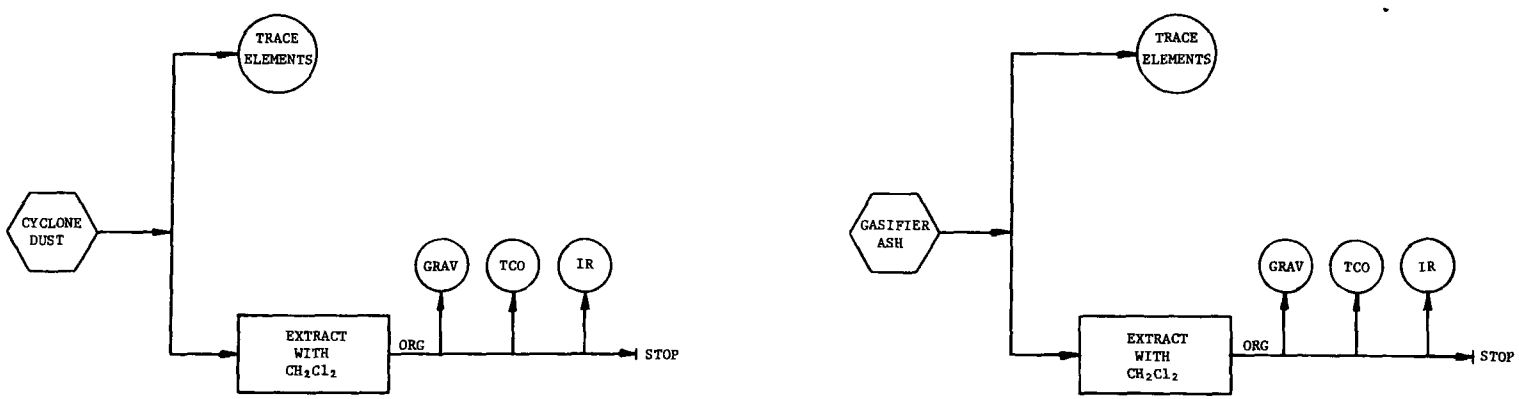

Figure 4-3. ANALYTICAL FLOW SCHEME FOR CYCLONE DUST AND GASIFIER ASH

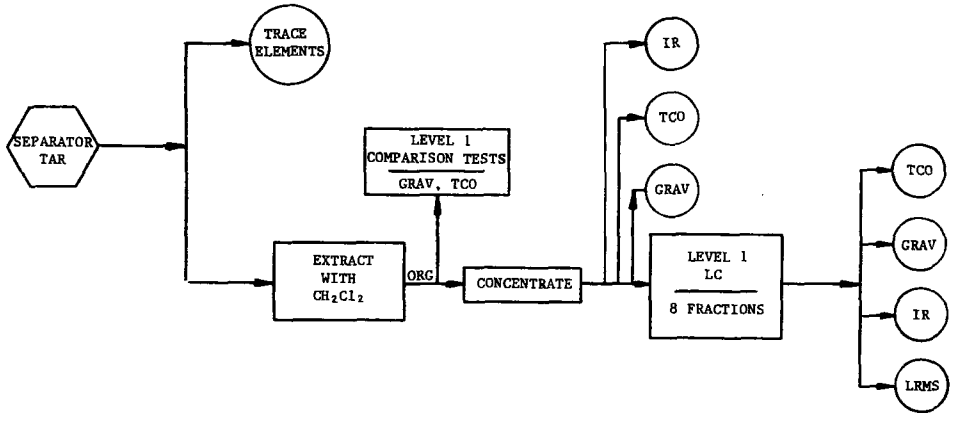

Figure 4-4. ANALYTICAL FLOW SCHEME FOR SEPARATOR TAR

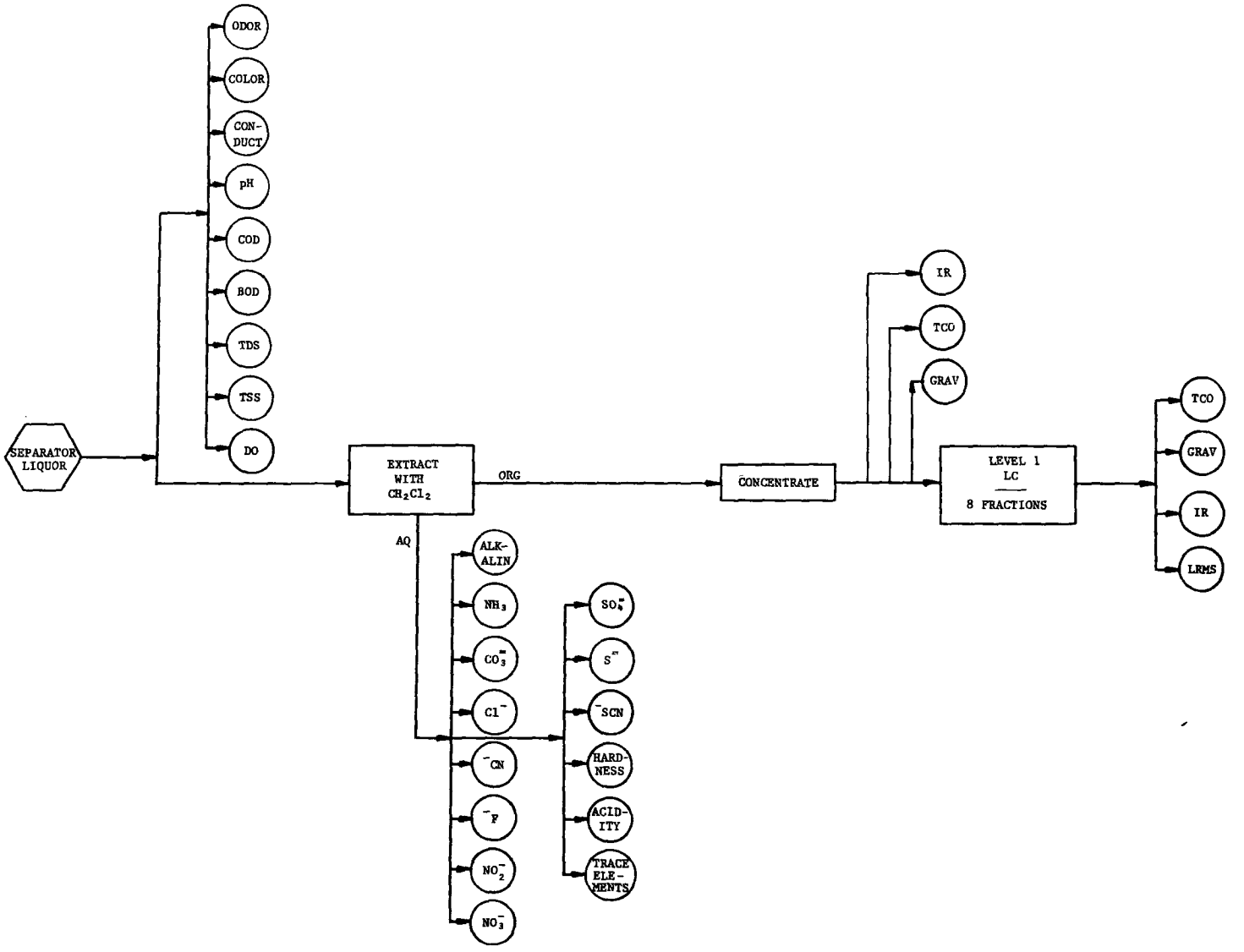

Figure 4-5. ANALYTICAL FLOW SCHEME FOR SEPARATOR LIQUOR

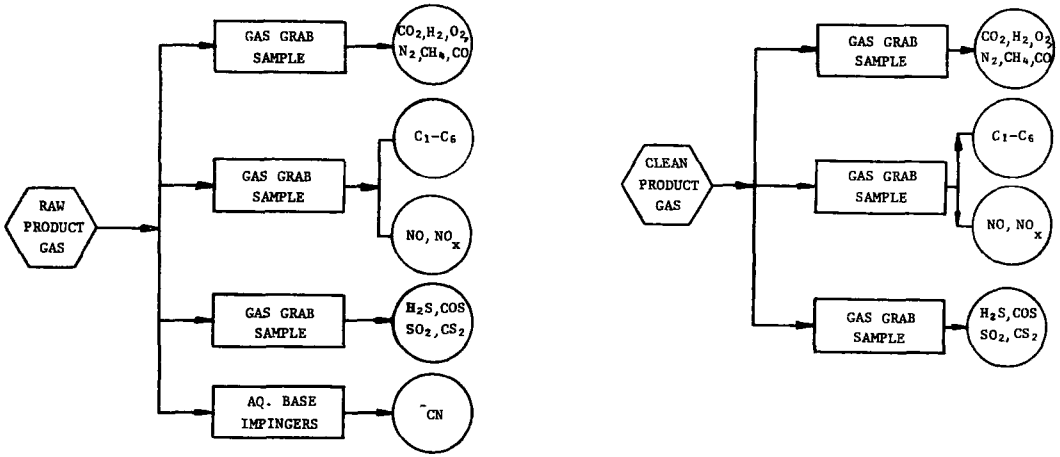

Figure 4-6. ANALYTICAL FLOW SCHEME FOR PRODUCT GAS SAMPLES

A description of the Level 1 analytical scheme for inorganic species is contained in Section 4.1, while Section 4.2 presents a description of the scheme for organic species. In addition to physical and chemical analyses, selected samples were subjected to biological screening tests. These tests are described in Section 4.3.

4.1 INORGANIC SPECIES ANALYSIS

Analyses for inorganic species and elements were performed both on-site and off-site. The on-site portion included gaseous sample analyses performed on filtered and dried grab samples taken from the spray scrubber outlet, the No. 2 coal feeder vent, the No. 2 cyclone exit, and the separator vent. On-site Level 1 water quality analyses were also performed on samples of separator liquor and on the condensate from the SASS train gas conditioning module used during one sampling run on the separator vent.

Additional water quality analyses were performed off-site on samples of the separator liquor and the condensate from the separator vent SASS train runs. Aqueous impinger samples collected from the separator vent, coal feeder vent, and the cyclone exit were also analyzed off-site.

Proximate and ultimate analyses of the coal feedstock, cyclone dust, gasifier ash, and tar were conducted by other laboratories. Appropriate samples from all of the above streams were returned to Austin and analyzed for trace element content.

The procedures used for the inorganic analyses are discussed in the following text.

4.1.1 Gas Phase Analytical Procedures

Grab samples of the coal feeder vent, separator vent, raw product gas, and clean product gas streams were obtained and analyzed on-site for each of the following groups of species:

- Fixed gases (H_2, N_2, CO_2, O_2, CH_4, CO)
- Oxides of nitrogen (NO, NO_x), and

- Sulfur species (H_2S, COS, SO_2, CS_2).

In addition, grab samples were taken for HCN, NH_3, and $(CN)_2$ analysis. However, the Level 1 techniques recommended for these species proved to be unsatisfactory due to a lack of sensitivity, and a substitute impinger technique had to be used.

Fixed Gases -

The fixed gas analyses were carried out on a Fisher Model 1200 Gas Partitioner equipped with dual columns and dual thermal conductivity detectors connected in series. The following instrument operating conditions were used:

Column 1: 3 m x 0.32 cm aluminum, Columpak PQ

Column 2: 5.2 m x 0.47 cm aluminum, 13x molecular sieve, 60-80 mesh

Carrier Gas: 8.5% H_2 in He

Carrier Flow: 33 cm^3/min

Oven Temp: 323°K

Injector Temp: Ambient

Bridge Current: 275 mA

Elution Order: CO_2, H_2, O_2, N_2, CH_4, CO

These conditions represent a slight modification of published Level 1 procedures, but have been found to give excellent results. The published Level 1 procedure using a molecular sieve 5A column at 313°K proved unsatisfactory because CO_2 is retained and cannot be measured. A carrier gas of 8.5% (by volume) hydrogen in helium was selected because it provided good sensitivity and linear response over a wide range of hydrogen concentrations in the gas samples.

Gas samples from the flexible, aluminized gas sampling bags were introduced into the gas partitioner through a 1 cm^3 sample loop. The loop and sample transport tubing were always flushed with >5 residence volumes of sample gas before the sample was injected.

Each fixed gas component in the sample was quantified by measuring its recorded peak height and comparing it to calibration curves. The calibration curves were prepared on-site, prior to the beginning of testing, in the following manner. Three certified standard mixtures containing the six species of interest were analyzed in triplicate on the partitioner, and the average peak heights were plotted against the known concentrations. Additional points were generated by diluting each of the standards with nitrogen and analyzing the known dilutions. Instrument performance was checked periodically by analyzing one of the calibration mixtures and comparing the results with the standard curves. The partitioner proved to be very stable throughout the test period.

Oxides of Nitrogen -

Analyses for NO and NO_x in each of the gas streams samples were performed using a Monitor Laboratories Model 8430 Analyzer equipped with a Model 8750 Stainless Steel Converter. This instrument determines the amount of NO present by measuring its chemiluminescence when reacted with ozone. NO_x is measured by first converting the NO_x to NO and then measuring the total NO. None of the gas samples analyzed approached the instrument's upper detection limit of 500 ppmv NO.

Samples from teflon sample bags were introduced into the instrument by an internal pump through teflon transfer tubes. The detector output was read from a panel-mounted meter set at the appropriate scale. The sample was first introduced in the NO mode, and the level of NO was measured. The instrument was then changed to the NO_x mode, and the combined levels of NO and NO_2 were measured.

The analyzer was calibrated daily at zero ppmv NO using zero air and ambient air. It was then calibrated using a stream of nitrogen containing a known amount of NO_2 in the 60-100 ppmv range. This steam was generated in a Tracor Model 412 Permeation Chamber using certified NO_2 permeation tubes. The second calibration was based on the analyzer manufacturer's stated NO_2 to NO converter efficiency of 99%.

No problems were encountered during NO analysis of any of the gas samples or during NO_x analysis of the separator vent gas. However, no reading was obtained when NO_x analyses were attempted on samples from the coal feeder vent, spray scrubber

outlet, and No. 2 cyclone exit samples. After failing to identify any instrument malfunction, the following experiment was performed. A stream of NO_2 in N_2 was introduced into the analyzer from the permeation chamber. After the reading stabilized at the correct concentration, indicating proper instrument function, a stream of No. 2 cyclone exit gas was slowly mixed with the calibration stream. After approximately 15-20 seconds, the analyzer reading suddenly fell to zero. This indicated that some chemical species in the gas sample, probably CO and H_2, were interferring with the analysis of NO_x. This experiment also indicated that the NO_x value for the separator vent gas should be questioned because it also contained CO and H_2.

Sulfur Species -

The sulfur species (H_2S, COS, SO_2, CS_2) were analyzed on a Hewlett-Packard Model 5730 Gas Chromatograph equipped with a flame photometric detector (FPD). One cm^3 aliquots of the dried, filtered samples were withdrawn from the gas sampling bombs with gas-tight syringes and injected directly onto the column. The instrument conditions used for these analyses were:

Column: 0.86 m x 0.32 cm Teflon, Poropak QS, 80/100 mesh

Carrier Gas: N_2

Carrier Flow: 35cm^3/min

Injector Temp: 423°K

Detector Temp: 473°K

Oven Program: 313°K for 4 min
32°K/min to 433°K
433°K for 4 min

Detector Flows: Air: 50 cm^3/min
O_2 : 10 cm^3/min
H_2 : 50 cm^3/min

This separation technique is different from that specified in the Level 1 Manual, but Radian has found that the separation of H_2S and COS is more complete using the Poropak QS column. Also, the total analysis time is considerably reduced. The detector

output was recorded and integrated on a Hewlett-Packard Model 3380A Integrator/Plotter.

Instrument calibration was accomplished using a nitrogen stream containing known amounts of the four species. This calibration standard was generated from permeation tubes. The same injection technique was used for calibration as for sample analysis. Standards were run each day prior to any sample analysis, and multiple standard injections were made until stable, reproducible analyses were obtained.

The major problem encountered during on-site analysis for sulfur species involved sample introduction into the chromatograph. During early runs, the syringe, which was fitted with a stainless steel Luer-Lok tip and Teflon plunger seal, was cleaned with water and acetone and dried at 363°K after each injection. However, the peak for H_2S was considerably smaller than expected in the standard mixtures, and the SO_2 peak was nonexistent. It was found that if the syringe was not cleaned between runs, the H_2S and SO_2 peaks increased in size on each succeeding injection. After about the third run, the peaks appeared to reach a maximum which remained constant. This gave evidence to the apparent sorption of H_2S and SO_2 in the syringe. Negligible changes occurred in the responses of COS and CS_2.

This information resulted in development of a "curing" procedure for the sample injection syringe. The syringe was filled with the standard gas mixture and allowed to stand undisturbed for fifteen minutes. Standard mixture samples were then injected into the gas chromatograph until consecutive runs showed no increase in either the H_2S or SO_2 peaks. The syringe was then considered cured, and samples were run. Consecutive sample runs showed no increase in either the H_2S or SO_2 peaks, indicating that the "curing" procedure was effective. Blank injections of nitrogen using the "cured" syringe showed negligible memory effects, i.e., negligible amounts of sulfur species were desorbed from the syringe. This type of curing procedure was also used for preparation of the glass sampling bombs prior to sample collection.

Other Nitrogenous Species -

Gas grab samples for analysis of HCN, NH and $(CN)_2$ were originally scheduled to be taken from each gaseous stream tested. Analysis was to be conducted on a Fisher Model 1200 gas chromatograph using a thermal conductivity detector as specified

under the Level 1 protocol. However, calibration runs using diluted samples of both NH_3 and HCN indicated that the lower detection limit for each species was approximately 2,000 ppmv. The instrument conditions for these analyses were as follows:

Column: 2.8 m x 0.32 cm stainless steel, Poropak Q 100/120 mesh

Carrier Gas: N_2

Carrier Flow: 35 cm^3/min

Injector Temp: 373°K

Detector Temp: 373°K

Oven Temp: 353°K

Since these lower detection limits were higher than the expected concentrations of the species in the actual process gas sample, this method of analysis was abandoned. Instead, HCN and NH_3 were sampled by pulling gas samples through basic, and then acidic, impingers. The impinger solutions were then analyzed for NH_3 and HCN by standard wet chemical methods in Radian's Austin laboratories.

4.1.2 Aqueous Media Analytical Procedures

The aqueous samples collected during the Chapman facility test fell into three categories: Condensate from SASS train runs on the separator vent; the raw separator liquor; and impinger solutions from sampling the separator vent, coal feeder vent, and raw product gas. Analyses performed on these samples consisted of water quality parameters (including inorganic species) and elemental composition. Table 4-2 lists the specific analyses performed on each of the aqueous samples obtained during the test.

Water quality analyses of the organic module condensate from one SASS train run at the separator vent were divided into two groups - those performed on the condensate before extraction of organic species and those performed after the CH_2Cl_2 extraction. Samples of unextracted condensate from a second SASS train run on the separator vent were returned to Austin for additional analyses. Table 4-3 summarizes the analyses performed, location of analyses, and sample origins.

Table 4-2. AQUEOUS PHASE ANALYSES BY STREAM

	Color	Conductivity	pH	COD	BOD	TDS	TSS	DO	Odor	Alkalinity	NH_3		$CO_3^{=}$	Cl^-	CN^-		F^-	Hardness	NO_3^-	NO_2^-	$SO_4^{=}$	$S^{=}$		SCN	Acidity	Elements
Separator Vent Condensate			X	X	X	X	X			X	X			X	X		X		X	X	X	X		X	X	X
Separator Vent Impingers											X			X	X		X							X		
Coal Feeder Vent Impingers											X			X	X		X							X		
Raw Product Gas Impingers															X									X		
Separator Liquor	X	X	X	X	X	X	X	X	X	X	X		X	X	X		X	X	X	X	X	X		X	X	X

Table 4-3. WATER QUALITY ANALYSES ON SEPARATOR VENT GAS CONDENSATE

	pH	COD	BOD	TDS	TSS	Alkalinity	NH_3	NO_2^-	NO_3^-	$SO_4^=$	$S^=$	Acidity	CN^-	Cl^-	F^-	SCN
Unextracted Condensate Run #1	X	R	R	X	X											
Extracted Condensate Run #1						X	X	*	*	X	X	X	X			
Unextracted Condensate Run #2													R	R	R	R

X = On-site analyses
R = Radian in-house analyses
* = Analysis method failed

Water quality analyses of separator liquor were also performed on unextracted and extracted samples. A summary of the analyses, by sample type, is presented in Table 4-4.

Gas samples from the coal feeder vent, separator vent, and raw product gas streams were sampled using both aqueous acidic and basic impinger trains. The resulting impinger solutions were returned to Austin and analyzed for the species shown in Table 4-2. The ammonia analysis was performed on the acidic impinger solutions, while the other analyses were performed on the basic solutions.

The following analytical procedures were used to determine the water quality parameters of the various aqueous samples. Reagent test kits specified by Level 1 methods were used, when available, for the on-site analyses. If no suitable kit was available, standard laboratory procedures were used.

Biochemical Oxygen Demand (B.O.D.) -

B.O.D. was determined according to procedures specified in Standard Methods for the Examination of Water and Waste Water (Ref. 3.). B.O.D. is a measure of the change in the amount of dissolved oxygen in the sample when incubated in the dark at 293°K for five days. This change in dissolved oxygen is related to the amount of organic matter which is assimilated and oxidized by microorganisms. An initial dissolved oxygen concentration was determined as described in the section on Dissolved Oxygen and after five days, a final concentration was determined.

Chemical Oxygen Demand (C.O.D.) -

C.O.D. was also determined according to procedures specified in Standard Methods for the Examination of Water and Waste Water. In this method, the sample is combined with a known quantity of potassium dichromate and sulfuric acid and refluxed for two hours. The extent of the oxidation reaction is determined by titration of excess dichromate with a standard ferrous ammonium sulfate solution using ferroin as an indicator.

Table 4-4. WATER QUALITY ANALYSES ON SEPARATOR LIQUOR

	Color	Conductivity	pH	COD	BOD	TDS	TSS	DO	Odor	Alkalinity	Acidity	Hardness	$CO_3^{=}$	Cl^-	F^-	CN^-	SCN	NH_3	NO_3^-	NO_2^-	$SO_4^{=}$	$S^{=}$
Unextracted Liquor	X	X	X	X	X	X	X	X	X							R		R				
Extracted Liquor										X	X	*	X	R	R	X,R	R	X,R	*	*	X	X

X - On-site analysis

R - Radian in-house analysis

* - Analysis method failed

Color -

True color was determined by visual comparison of a filtered sample (Whatman GF/C glass fiber filter) with known concentrations of a platinum-cobalt solution. Since the color of the separator liquor sample was brown, it was difficult to compare the sample to the standards but an estimate was made on the basis of color intensity.

Conductivity -

Conductivity was determined using a YSI Conductivity Meter Model 33-S-C-T. Conductivity in μmho/cm was determined from the electrical conductance of a sample measured between opposite faces of a 1 cm cube.

Dissolved Oxygen (D.O.) -

A Bausch and Lomb reagent test kit was used for dissolved oxygen determination. The test kit utilizes an azide modification of the Winkler titration, which is based on the oxidizing properties of dissolved O_2. In this procedure iodine is liberated and titrated with a standard sodium thiosulfate solution. Starch was added as an end-point detector. The addition of starch is necessary for the detection of end-points in brownish colored samples such as the separator liquor.

pH -

An Orion pH meter was used to measure the pH of the samples.

Solids -

Solids content was determined using the procedure outlined in Standard Methods for the Examination of Water and Waste Water. Total suspended solids were determined by filtering measured samples through a previously dried and tared fiber filter (Whatman GF/C). The filter bearing the suspended solids was then placed in an oven at 376°K and dried to a constant

weight. The filtrate from the suspended solids determination was transferred by pipet to a tared glass beaker. The beaker was placed in an oven at 376°K, and dried to a constant weight to determine Total Dissolved Solids.

Acidity -

Acidity was determined with a Hach test kit. This test utilizes an acid-base titration in which the sample is titrated with a standard NaOH solution to its phenolphthalein end-point (pH 8.3) and the results reported as μg/mℓ $CaCO_3$.

Alkalinity -

Alkalinity was determined using reagent test kits. This determination involved an acid-base titration in which the sample was titrated with a standard sulfuric acid solution to the phenolphthalein end-point (phenolphthalein alkalinity) and to the brom cresol green/methyl red end-point (total alkalinity). The results are reported as μg/mℓ $CaCO_3$. Both the Hach and the Bausch and Lomb tests kits were used for the alkalinity determinations. The powdered reagents from the Hach kit gave the sharper end-point.

Ammonia -

Ammonia determinations were made both on-site and at the Radian lab facilities in Austin. A Bausch and Lomb test kit was used on-site. This involved the spectrophotometric measurement of a colored complex produced by the Nessler reaction. In the Radian labs, the sample was distilled from an alkaline buffered solution. Ammonia which was driven off was captured in a boric acid scrubbing solution and determined by titration using a standard sulfuric acid solution.

Carbonate -

Carbonate was calculated from the results of the alkalinity and pH determinations. When the phenolphthalein alkalinity is not zero and is less than the total alkalinity, carbonate is present. The carbonate value was calculated by the following formula:

Carbonate = 2 x (phenolphthalein alkalinity - hydroxide ion concentration)

The hydroxide ion concentration was calculated from the pH determination and was expressed as μg/mℓ $CaCO_3$.

Chloride -

Chloride was determined according to procedures outlined in Standard Methods for the Examination of Water and Waste Water. The chloride concentration was measured by potentiometric titration using a standard silver nitrate solution. The end-point is detected by using a chloride-specific ion electrode which measures changes in potential as silver nitrate is added. The end-point is that point at which the greatest change in instrument reading occurs for the smallest increment of titrant added.

Cyanide -

Cyanide was determined on-site by using a Hach test kit. The analysis is based on the pyridine-pyrazolone reaction in which the cyanide is first coupled with free chlorine to form cyanogen chloride and then with pyridine to form a glutaconic aldehyde. The aldehyde then reacts with 1-phenyl-3-methyl-5 pyrazolone to form a highly colored blue dye. Both cyanide and cyanate are measured by this method. If only cyanide is to be determined, an initial distillation step must be included.

Cyanide was determined at Radian's facilities using the following method. An aliquot of preserved sample was placed in a cyanide distillation apparatus with an air purge. The sample was acidified and refluxed, causing hydrogen cyanide gas to be liberated from the sample. The cyanide gas was collected in an NaOH solution and its concentration determined by the colorimetric procedure described previously.

Fluoride -

Fluoride was determined using standard additives and with a fluoride specific-ion electrode. Fluoride complexed by

uranium, thorium, aluminum and iron is released by addition of a citrate buffer which also serves to eliminate variances in pH and ionic strength. The observed changes in potential can be related directly to fluoride concentration.

Hardness -

Hardness was determined by the use of a Hach test kit. Calcium and magnesium ion concentrations were determined by adding disodium EDTA to the sample. The end-point of the reaction is detected with Eriochrome Black T which has a red color in the presence of calcium and magnesium and a blue color when the cations are complexed with the Na_2EDTA.

Nitrite -

Nitrite was determined with a Bausch and Lomb test kit. The determination is based on the formation and colorimetric measurement of a reddish purple dye produced by the coupling of diazotized sulfanilic acid with naphthylamine hydrochloride.

Nitrate -

Nitrate was determined with a Bausch and Lomb test kit. Nitrate is changed to nitrite by cadmium reduction. The resulting nitrite is determined as described above. Correction was made for any nitrite which was initially present in the sample.

Sulfate -

Sulfate was determined with a Bausch and Lomb test kit. The sulfate in the sample was precipitated as $BaSO_4$ and the turbidity of the suspended precipitate was measured at 420 nm on a spectrophotometer.

Sulfide -

Sulfide was determined on-site using a Hach test kit. The analysis is based on the ability of hydrogen sulfide and acid-soluable metallic sulfides to convert N, N-dimethyl-p-

phenylenediamine oxalate directly to methylene blue. The intensity of the methylene blue color developed is directly proportional to the amount of sulfide present in the original sample.

At Radian, sulfide was precipitated as zinc sulfide and dewatered on a glass fiber filter. The filter was then placed in a flask where sulfide was redissolved in a known acid-iodine solution. After the sulfide was oxidized by the iodine, residual iodine was then back titrated with thiosulfate solution until the blue color of a starch indicator disappeared.

4.1.3 Analyses of Solids Samples

The solid samples collected during the Chapman gasifier test included gasifier ash, cyclone dust, and coal feeder vent particulates. In addition, samples of separator tar and coal feedstock were also collected. Ultimate analyses of the coal were performed by the Institute for Mining and Mineral Research, Lexington, Kentucky. The Institute used standard procedures for these analyses.

4.1.4 Analyses for Trace Elements

All of the streams examined in the test program were analyzed for trace elements (see Table 4-5). The preparation of samples and the analytical methods used in determinations for trace element compositions were identical to those described in the Level 1 Environmental Assessment Manual. Solid samples were ashed in a quartz-lined Parr combustion bomb, and then dissolved in dilute aqueous nitric acid. The resultant liquid samples were then analyzed without modification.

Analyses for mercury, antimony, and arsenic were performed at Radian using atomic absorption spectrophotometry. Analyses for the remaining elements were made using spark source mass spectrometry at the Commercial Testing and Engineering Laboratories, Golden, Colorado. Blank samples were also run on the Parr bomb itself and on clean XAD-2 resin samples.

Table 4-5. SAMPLES ANALYZED FOR TRACE ELEMENT COMPOSITION

Coal Feed

Gasifier Ash

Cyclone Dust

Separator Liquor

Separator Tar

Separator Vent

- XAD-2 Resin Extract
- Condensate
- $(NH_4)_2S_2O_8$ Impinger Solution

Coal Feeder Vent

Particulate

- XAD-2 Resin Extract
- Condensate
- $(NH_4)_2S_2O_8$ Impinger Solution

Parr Bomb Blank

XAD-2 Resin Blank

{ Combined for reporting purposes

4.2 ORGANIC SPECIES ANALYSIS

The organic analysis of the samples collected during the test included:

- analyses for gaseous hydrocarbons,
- extraction of the organics from liquid and solid samples, and
- preparation and analysis of the extracts and rinses.

Level 1 methodologies were generally followed, although modifications were made where experience or unusual sample conditions indicated that Level 1 methodologies would not yield satisfactory data.

The organic analyses performed on-site and off-site are given below:

- On-site portion
  1) gaseous hydrocarbons analyses
  2) organic extraction of aqueous samples
- Off-site portion
  1) organic extraction of solid samples
  2) preparation of organic extracts and washes
  3) analyses of extracts and washes

Table 4-6 lists the streams sampled for organic analyses.

The following sections describe the procedures used for analysis of the organics in samples collected during the test. Section 4.2.1 addresses the on-site gaseous hydrocarbon species analysis. Section 4.2.2 describes the on-site and off-site organic extraction procedures, while Section 4.2.3 describes

the off-site preparation and analytical procedures used for the organic extracts and rinses.

Table 4-6. STREAMS SAMPLED FOR ORGANIC SPECIES ANALYSES

Streams (Stream Type)	Gaseous Organics	Condensable and/or Extractable Organics
Separator Vent (Waste Stream)	X	X
Coal Feeder Vent (Waste Stream)	X	X
Gasifier Ash (Waste Stream)		X
Cyclone Dust (Waste Stream)		X
Separator Tar (Process Stream)		X
Separator Liquor (Process Stream)		X
Raw Product Gas (Process Stream)	X	
Clean Product Gas (Process Stream)	X	

4.2.1 Gaseous Hydrocarbon Species Analyses

Grab samples from each of the following gas streams were caught in flexible Teflon bags and analyzed on-site for light hydrocarbons (C_1-C_6):

- coal feeder vent,
- separator vent,
- raw product gas (#2 cyclone exit), and
- clean product gas (spray scrubber outlet).

Modified Level 1 procedures were used for these analyses. This involved using a Hewlett-Packard Model 5730 gas chromatograph equipped with a flame ionization detector (FID). One cm^3 aliquots of the gas samples were transferred from the sampling bags by a gas-tight syringe and injected directly onto the column. The instrument conditions for this analysis were:

Column: 2.8 m x 0.32 cm stainless steel, Poropak Q 100/120 mesh

Carrier Gas: N_2

Carrier Flow: 40 cm^3/min

Injector Temp: 423°K

Detector Temp: 473°K

Oven Program: 323°K for 16 min
4°K/min to 473°K
473°K for 16 min

The detector output was plotted and integrated on a Hewlett-Packard Model 3380A Integrator/Plotter. Component concentrations were determined from peak areas as calculated by the integrator.

This instrument was calibrated by analyzing a standard mixture of nitrogen containing 1000 ppmv each of methane, ethane, propane, n-butane, n-pentane, and n-hexane. This calibration was performed daily before the first sample was run. The standard was analyzed until reproducible results were obtained three consecutive times for all six compounds. The average of these three runs was then programmed into the integrator.

4.2.2 Organic Extraction Procedures

In this section, the procedures used to prepare samples for organic analysis from gas, liquid, and solid samples are described. The samples collected for organic analyses were obtained from:

- gaseous waste streams (coal feeder and separator vent gases),
- solid waste streams (ash and cyclone dust) and by-product tar, and
- aqueous process stream (separator liquor).

Gaseous Waste Streams -

The SASS train was used to sample the coal feeder and separator vent gases. Two samples for organic analysis were obtained from each of these runs. The first sample included rinses of the nozzle, probe, and cyclones. For the SASS train run on the coal feeder vent, these rinses were also filtered and the resulting solids extracted with CH_2Cl_2. This extract and the rinses were combined for organic analysis.

The second organic sample recovered from the SASS train consisted of a combination of the CH_2Cl_2 rinses of the gas conditioning module, the CH_2Cl_2 extracts of the condensate, and the pentane extracts of the XAD-2 resin. The condensate was extracted on-site three times with a 1:10 ratio of solvent to aqueous phase. The XAD-2 resin was returned to Austin and extracted with 2 liters of pentane in a Soxhlet extraction apparatus for 24 hours.

Level 1 procedures stipulate that all the organic samples from the SASS train should be combined and analyzed as

one sample. However, when the SASS train was used to sample the coal feeder vent gases, the material rinsed from the particulate module looked different from the material rinsed from the organic module. Therefore, these rinses were not combined, but were analyzed as two separate samples.

The organic rinses from the particulate and organic modules of the SASS train sampling of the separator vent appeared to be similar. However, they were also treated as two separate samples, in order to be consistent with the analysis procedure used for the coal feeder vent stream.

Solid Waste Streams and Tar -

Samples for organic analysis of the tar, gasifier, ash, and cyclone dust were obtained by extraction. As prescribed in the Level 1 procedures, appropriate quantities of each sample were extracted with CH_2Cl_2 in a Soxhlet extraction apparatus for 24 hours. As anticipated, a major portion of the tar sample (∿60%) was extracted in this manner. However, only small amounts of organics were obtained from the ash and dust samples: ∿ 4 mg from 200g ash and ∿ 13 mg from 363g of dust. According to Level 1 criteria these quantities were insufficient to justify further separation and analysis.

Aqueous Process Stream -

The sample for organic analysis of the separator liquor was also obtained by extraction. This extraction was done on-site and consisted of three separate extractions using a 1:10 ratio of CH_2Cl_2 to liquor. The three extracts were combined for analysis.

4.2.3 Preparation and Analysis Methods

The organic contents of the extract solutions described in the previous section were first quantified by gravimetric analysis, as described in a following section. The solutions were then concentrated using a Kuderna-Danish concentration apparatus. The degree of concentration was determined either by the point of precipitate appearance or by visual determination of the darkness of the solution. This typically resulted in concentrate volumes of 4-100 mℓ, containing 50-200 mg/mℓ of organ-

ics, as determined subsequently by gravimetric analysis. However, extracts of cyclone dust and gasifier ash were concentrated to 1 mℓ because of their low organic content.

Following concentration, the samples were analyzed using Level 1 procedures. As shown in Figure 4-1 through 4-6, this entailed:

- gravimetric analysis, (gravs)
- total chromatographable organics (TCO) analysis,
- liquid chromatography (LC),
- infrared spectrophotometry (IR), and
- low resolution mass spectrometry (LRMS).

These techniques are discussed in the following text.

Gravimetric Analyses -

Gravimetric analyses were done on both dilute (0.5-3.0 mg/mℓ) and concentrated (10-200 mg/mℓ) extracts and on liquid chromotography fractions. These analyses were performed by transferring 1 mℓ of solution to a tared 5 cm glass watch glass, and then allowing the solvent to evaporate until the sample reached a constant weight (4 hour weighing intervals) at room temperature in a dessicator. The watch glass was protected from dust and other contamination by placing it in a glass Petri dish. All weighings were performed on a Mettler H35AR analytical balance to a reproducible accuracy of ± 0.2 mg.

The gravimetric determinations (gravs) presented one of the more significant organic analysis problems. Generally, the problem experienced with the gravs involved inconsistencies in the resulting data for mass balances and flows within a sample system. This probably was due to two factors. First, a significant potential for inaccuracy existed when weighing the samll amounts of organics obtained from the dilute solutions and liquid chromatography fractions. Second, although the concentrated solutions were evaporated to a constant weight, a

scum formed on the surface of certain samples which may have hampered the evaporation of volatile organics.

Total Chromatographable Organics Analyses (TCO)

Total chromatographable organics are defined by Level 1 as those compounds which have gas chromatographic retention times between n-heptane and n-hexadecane. TCO analyses were carried out on a Hewlett-Packard Model 5710A gas chromatograph equipped with a flame ionization detector and a Hewlett-Packard Model 3380A Integrator/Plotter. Samples of 1 μℓ were injected by syringe and analyzed. The analyses were performed under the following instrument conditions.

Column:	2.8 m x 0.2 cm i.d. glass, 10% OV-101 on 100-120 mesh Supelcoport
Carrier Gas:	N_2
Carrier Flow:	30 cm^3/min
Oven Program:	303°K for 4 min 16°K/min to 523°K 523°K until after elution time of C_{17} standard, then an additional 5 min
Injector Temp:	523°K
Detector Temp:	523°K

Calibrations were performed using a methylene chloride solution containing 380 μg/mℓ each of normal alkanes from C_6 through C_{17}. Calibrations of the integrator were done daily before and after each group of samples were analyzed.

Two major problems were encountered during these analyses: (1) a lack of internal consistency in the data collected on dilute and concentrated samples, and (2) an inability of the integrator to compute accurately the peak areas in the typically complex chromatograms obtained. The TCO analyses of the initial dilute extracts and of some of the liquid chromatography fractions understated the TCO concentrations, compared to analyses of concentrates. This apparently was caused by a failure to

detect many compounds present in very low concentrations. When the sample was concentrated such compounds became detectable, but a new problem arose. The samples from the gasification process contained so many different chromatographable compounds that the chromatograms of the concentrates were very complex.

Liquid Chromatography (LC)

Concentrated extracts from the following sources were subjected to a Level 1 liquid chromatographic separation on silica gel:

- coal feeder vent SASS particulate train,
- coal feeder vent SASS organic module,
- separator vent SASS particulate train,
- separator vent SASS organic module,
- separator liquor, and
- separator tar.

Due to the tarry nature of most of the samples, a modified Level 1 procedure was used for preparation of the sample for application to the LC column. A volume of sample solution was mixed with 500 mg of silica in a 5 mℓ round-bottom flask fitted with a two ball micro-Synder distillation column. The solvent was evaporated slowly with constant agitation to prevent bumping. Just before the silica reached dryness, 1 mℓ pentane was added and the evaporation was repeated. This step was then repeated a second time. Afterwards, the silica was air-dried sufficiently to allow it to be poured onto the head of a pre-packed LC column. The LC separation was then carried out according to Level 1 procedures.

Column loadings ranged from 100-600 mg of combined gravimetric and TCO weight organics. Although some columns were overloaded according to Level 1 specifications, no appreciable degradation of separation was noted. Some spreading of bands of organics across several fractions was observed, but the occurrence of this phenomenon did not appear related to column loading. For all samples, the appearance of the columns after chromatography indicated that a quantity of dark colored

(probably tar) material had not been eluted. Usually the entire column was dark brown or black.

Infrared Analyses (IR)

Infrared analyses were performed on a Perkin-Elmer Model 238 grating infrared spectrophotometer. Samples were run as thin films between two KBr windows. The only problems encountered during the collection of spectra was that many of these samples had tarry and semi-solid components which made it difficult to obtain a good thin film. Consequently, it was impossible to get good peak resolution in some of the spectra.

Interpretations of the spectra generated from these tests were generally quite difficult. The complexity of the samples caused the IR spectra to contain a multitude of peaks. In many cases, compound class identification was difficult, especially from peaks in the fingerprint region. However, classes of compounds identified separately in the low resolution mass spectra analyses could usually be verified from the IR spectra.

Low Resolution Mass Spectrometry Analyses (LRMS) -

The low resolution mass spectrometry analyses were performed on a Hewlett-Packard 5980A Series Mass Spectrometer equipped with a disc storage data system. Spectra were obtained from probe inlet sampling at both high (70 ev) and low (10 ev) ionization voltages as described in the Level 1 manual.

Two problems were encountered during these analyses. First, volatiles were lost during the solvent evaporation step prior to sample input. And second, problems arose in selecting which (of the up to 300) individual spectra from each sample should be used in interpretation phase of the analyses.

4.3 BIOASSAY ANALYSIS

As part of the Level 1 testing effort at the Chapman facility, selected samples of process and waste streams were subjected to various bioassay screening tests. These tests can be divided into either health or ecological effects tests.

These tests, and the company or institute that performed them, are listed below.

- Health Effects Test
  - Ames (SRI International)
  - Cytotoxicity (WI-38, RAM) (Arthur D. Little, Inc.) (Northrop Services, Inc.)
  - Rodent acute toxicity (Litton Bionetics)
- Ecological Effects Tests
  - Fresh water (algal, daphnia, fathead minnow) (Battelle)
  - Salt water (algal, shrimp, sheepshead minnow) (EG&G Bionomics)
  - Terrestrial (soil microcosm, plant stress ethylene) (Battelle)

The procedures for each of the above tests are described in the Level 1 Environmental Assessment Manual. The following text presents a brief description of the methodologies used to perform these tests on selected samples.

4.3.1 Ames Test

The Ames test is used to measure the potential mutagenicity (carcinogenicity) of a material. This test was performed on the following samples:

- coal feed,
- coal feeder vent gas (XAD-2 extract),
- gasifier ash,
- cyclone dust,
- tar,

- separator vent gas (XAD-2 extract), and
- separator liquor.

The Ames test performed on the above samples used Salmonella typhimurium strains TA1535, TA1537, TA1538, TA98 and TA100. These strains were all histidine auxotrophs. Strains TA98 and TA100 are not specified in the Level 1 procedure, however, in some cases they are more sensitive to mutagenic agents. The Ames test has been proven to be 80 to 90% accurate in detecting carcinogens as mutagens, and it has about the same accuracy in identifying materials that are not carcinogenic. Therefore, neither a positive or negative response proves conclusively that a material is hazardous or nonhazardous to man.

4.3.2 Cytotoxicity Tests

Cytotoxicity tests are used to estimate the acute cellular toxicity of a sample from an in-vitro cell mortality test using a human lung culture (WI-38) and rabbit aveolar macrophages (RAM). These tests were performed on the following samples:

- coal feed (WI-38, RAM),
- coal feeder vent gas WAC-2 extract (WI-38, RAM),
- gasifier ash (RAM),
- tar (RAM),
- separator vent gas XAD-2 extract (WI-38, RAM), and
- separator liquor (RAM).

The protocol, defined in the Level 1 Environmental Assessment Manual, was used with the following modifications:

- Assays were conducted in tubes rather than in 4-place cluster dishes.
- Each culture tube was supplemented with dμCi ^{14}C-amino acids.
- At the end of the 10-hour incubation period, cells were washed three times with cold phosphate buffered saline. Tricholoroacetic acid-precipitable material in each tube was collected on Gelman Type E filters and counted for radioactivity in a Searle Mark III scintillation counter.

The results of the cytotoxicity test are presented as cell count EC_{50}'s.

4.3.3 Rodent Acute Toxicity Test

The rodent acute toxicity test is used to measure the acute toxicity of a material in a whole animal by administering known levels of the sample to a small population of rats. Samples analyzed by this test were:

- coal feed,
- gasifier ash,
- cyclone dust,
- tar, and
- separator liquor.

Young addult rats (weighting 199 to 340 g and 10 to 12 weeks old at the time of treatment) of the Charles River CE strain (CRL: COBS CD (SD) BR) were used. The sample was administered to the test animals (5 male and 5 female) in a single dose of 10 g of sample per kg of animal weight. The rats were observed frequently, and were weighed on the seventh and fourteenth days after sample administration. Necropsies were performed on the animals that survived 14 days. The mortality rate estimated from this test was then extrapolated to give an LD_{50} value for each sample.

4.3.4 Fresh Water Tests

Fresh water bioassay tests were performed using algae, daphnia, and fathead minnows. These tests are used to give acute toxicity values for various concentrations of a sample in fresh water. The separator liquor was the only sample analyzed by these tests.

Algae Test -

Selenastrum capricornutum was the test species used for the algae test. The maximum specific growth rate for each sample concentration was obtained over the 15-day test. The algae EC_{50} (defined as the sample concentration which produces a maximum specific growth rate equal to one-half that of the controls) was obtained from dose-response plots of sample concentration versus maximum specific growth rate.

Daphnia Test -

Cultures of the cladoceran Daphnia pulex were used for the daphnia test. LC_{50} values (defined as the sample concentration that will affect 50 percent of the test organisms) were obtained by plotting sample concentration versus the percent of organisms killed.

Fathead Minnow Tests -

Fathead minnows (Pimephales promelus) weighing approximately 1 g and having a length of about 5 cm were used in this test. LC_{50} values (defined as the sample concentration required to kill 50 percent of the fish) were calculated by plotting sample concentration versus the percent of fish killed.

4.3.5 Salt Water Tests

Salt water bioassay tests were performed using marine algae (Skelotonema costatum), grass shrimp (Palaemonetes pugio) and sheepshead minnows (Cyprinodon variegatus). The procedures for salt water bioassay tests are similar to the procedures

for the fresh water tests described previously. The sample tested for salt water bioassays was the separator liquor. EC_{50} for algae and LC_{50} for shrimp and minnows were obtained for the liquor sample.

4.3.6 Soil Microcosm Test

The soil microcosm test is used to measure or rank the toxicity of a material to the microorganisms found in soil. The samples that were tested were:

- coal feed,
- gasifier ash,
- cyclone dust,
- tar, and
- separator liquor.

Measurements on CO_2 efflux and calcium export were made. The results of these analyses were used to rank the samples according to their soil microcosm toxicity. Dissolved organic carbon measurements were not made on these samples.

4.3.7 Plant Stress Ethylene Test

Five-week-old soybean plants (Glycine max) were used as the test organisms for the plant stress ethylene bioassay. This test was performed on a sample of the coal feeder vent gas. The amount of ethylene produced by the plants after exposure to the gas sample was measured. A positive (increase in ethylene production) or negative (no change in ethylene production) is the result of this bioassay.

SECTION 5.0

TEST RESULTS

In this section the methodologies used and the results obtained in this STE program performed at a Chapman gasification facility are presented.

5.1 METHODOLOGIES

The following methodologies were used to interpret the data from the chemical and bioassay tests:

- SAM/1A analyses, and
- analyses of bioassay tests.

5.1.1 SAM/1A Methodology

The Energy Assessment and Control Division of the EPA's Industrial Environmental Research Laboratory at Research Triangle Park (IERL-RTP/EACD) has developed a standardized methodology for interpreting the results obtained from environmental assessment programs. This methodology uses Source Analysis Models (SAM's) (Ref. 4), coupled with the Multimedia Environmental Goals (MEG's) (Ref. 2).

The simplest member of the SAM's is SAM/1A. This model provides a rapid screening technique for assessing the pollution potential of gaseous, liquid, and solid waste streams. Major simplifying assumptions implicit in the use of the SAM/1A methodology include the following.

- The substances currently in the MEG's are the only ones that must be addressed at this time.
- Transport of the components in the waste streams to the external environment occurrs without chemical or physical transformation of those components.

- Actual dispersion of a pollutant from a source to a receptor will be equal to, or greater than, the safety factors normally applied to acute toxicity data to convert these data to estimated safe chronic exposure levels.

- The minimum acute toxicity effluent (MATE) values developed for each substance are adequate for estimating acute toxicity.

- No synergistic effects occur among the waste stream components.

These assumptions, along with the accuracy of the test data and assumptions used in developing MATE values (Ref. 2), must be considered when interpreting test results using a SAM/1A analysis scheme.

In performing a SAM/1A analysis, values are determined for degree of hazard and toxic unit discharge rate associated with the pollutants and waste streams. The degree of hazard for each pollutant is defined as the ratio of the pollutant's concentration in the stream to its respective MATE value (health and ecological). The degree of hazard for a waste stream is determined by adding the degree of hazard values for each pollutant in the stream. The toxic unit discharge rate for a compound is determined by multiplying its degree of hazard value by the waste stream flow rate.

Degree of hazard values were calculated for each MEG category identified in the sample. The compound with the lowest MATE value in that category (that also fell within the molecular weight range found in the sample by LRMS) was selected for calculation of degree of hazard values.

5.1.2 Bioassay Test Analysis

The results reported for the bioassay tests were derived from the reports submitted by the subcontractors performing the tests and from recommendations made by the Bioassay Subcommittee formed by IERL/RTP. Comparisons were made between the bioassay test results and SAM/1A analyses of the chemical analysis results.

5.2 RESULTS

The results of the STE program performed at the Chapman facility are divided into the following areas:

- total plant,
- gaseous waste streams,
- solid waste streams,
- potential fugitive emissions and effluents,
- hot cyclone performance, and
- results not reported in the Level 1 analysis.

The Level 1 chemical and bioassay test results of each of the above areas are discussed in the following text.

5.2.1 Total Plant

The mass balance of the major input and output streams around the Chapman facility is given in Table 5-1. During the test, two gasifiers (No's. 2 and 3) were operating at a combined capacity of approximately 60 percent, with the No. 3 gasifier operating at a higher capacity than the No. 2 gasifier. The total mass of the streams exiting the plant was found to be within 16% of the total mass entering the facility.

The results from the SAM/1A analysis and bioassay tests of the multimedia waste streams, and the potential fugitive emissions and effluent streams are presented in Table 5-2. In most cases, the results of the SAM/1A analysis (degree of hazard values) compared favorably to the bioassay test results. Exceptions were noted with the results for gasifier ash and separator liquor. For the ash stream, the degree of hazard values indicated a moderate potential for hazardous ecological effects, while the bioassay tests indicated a low potential. The health degree of hazard for the separator liquor indicated moderate potential for hazardous effects, while the health bioassay tests indicated a low potential.

Table 5-1. MASS BALANCE AROUND THE CHAPMAN GASIFICATION FACILITY

Stream Description	Flow Rate (kg/s)[a]		
	No. 2 Gasifier/ Cyclone	No. 3 Gasifier/ Cyclone	Total Facility
INPUT STREAMS			
Air	0.33*	0.44*	0.77
Steam	0.068*	0.092*	0.16
Coal Feed	0.129	0.175	0.304
TOTAL	0.527	0.707	1.234
OUTPUT STREAMS			
Gasifier Ash (dry)	0.0085	0.010	0.0185
Cyclone Dust	0.00067	0.00094	0.00161
Cooled Product Gas **	0.420*	0.569*	0.989
By-Product Tar	0.0129*	0.0175*	0.0304*
TOTAL	0.442	0.597	1.040
INPUT MINUS OUTPUT			
kg/s	0.085	0.11	0.19
% of INPUT	16	16	16

[a]Kg/s = 7938 lb/hr

* Back calculated by ratioing coal feed rate data.

** Based on gas molecular weight of 25.4.

Table 5-2. SUMMARY OF SAM/1A AND BIOASSAY TEST RESULTS FOR TOTAL PLANT WASTE STREAMS AND POTENTIAL FUGITIVE EMISSIONS AND EFFLUENTS

	Degree of Hazard[a,b]		Toxic Unit Discharge[c]		Bioassay Tests	
	Health Concern	Ecological Concern	Health Concern	Ecological Concern	Health[d]	Ecological[e]
Gaseous Waste Streams						
•Coal Feeder Vent Gas	4×10^7	8×10^5	2×10^6	5×10^4	High	High
•Separator Vent Gas	1×10^8	1×10^6	6×10^7	6×10^5	High	NC
Solid Waste Streams						
•Cyclone Dust	2×10^3	8×10^6	3×10^3	1×10^7	Low	High
•Gasifier Ash	5×10^3	8×10^5	9×10^4	2×10^7	Low	Low
Potential Fugitive Emissions						
•Raw Product Gas	4×10^8	8×10^6	ND	ND	NC	NC
•Separator Liquor	3×10^5	2×10^5	ND	ND	Low	High
•By-Product Tar	1×10^8	2×10^7	ND	ND	High	High

[a]Degree of Hazard is defined as the ratio of a pollutant's concentration in a stream to its minimum acute toxicity effluent (MATE) value.

[b]Potential for hazardous health and ecological effects can be estimated by the following:

Potential Effect	Degree of Hazard
High	$>10^7$
Moderate	$10^5 - 10^7$
Low	$10^2 - 10^5$
Inconclusive	$<10^2$

[c]Toxic Unit Discharge is determined by multiplying the value of Degree of Hazard by the waste stream flow rate (gases: Nm^3/sec, liquids: ℓ/sec, solids: g/sec).

[d]Health tests included: Ames, Cytotoxicity (WI-38, RAM), Rodent Acute Toxicity

[e]Ecological tests included: Soil microcosm, plant stress ethylene, fresh water bioassay, and salt water bioassay

NC - Test not conducted
ND Flows not determined for potential fugitive emissions or effluents

5.2.2 Gaseous Waste Streams

The gaseous waste streams tested in this program were the coal feeder and separator vent streams. The results of the SAM/1A, chemical and bioassay tests for each stream are presented in the following sections.

Coal Feeder Vent Stream -

The coal feeder vent stream contained organics and inorganic components similar to those found in the raw product gas stream. The tarry material collected in the particulate module of the SASS train was significantly different from the material collected in the organic module. The predominant organic categories found in both the organic module and the particulate module samples were PAH's, heterocyclic aromatics, and phenols. However, PAH's represented almost 80% of the organics from the organic module, while in the particulate module each of the above three categories accounted for ∿20-40% of the organics found. Additionally, small quantities of a wider variety of organic categories, including the volatile ones, were found in the organic module. The concentrations of the various organics found in the particulate module and organic module samples are compared in Figure 5-1.

A summary of the degree of hazard values for the Multimedia Environmental Goals (MEG) chemical categories or compounds found in the sample is shown in Table 5-3. Also shown in this table are the results from specific bioassay tests. Positive results were obtained from the Ames test while the plant stress ethylene test showed negative results.

The information presented in Table 5-3 can also be used as a basis for planning subsequent Level 2 chemical characterization tests. A high priority for Level 2 chemical analysis is placed on MEG categories having degree of hazard values greater than 100. Medium and low priorities are given to categories having degree of hazard values between 10-100 and 1-10, respectively. Based on these prioritization criteria, a higher priority exists for a detailed characterization of fused aromatic hydrocarbons and their derivatives, heterocyclic nitrogen compounds, NH_3, V, Ag, C_2-hydrocarbons, CO, and Cr than for the other chemical categories listed in this table.

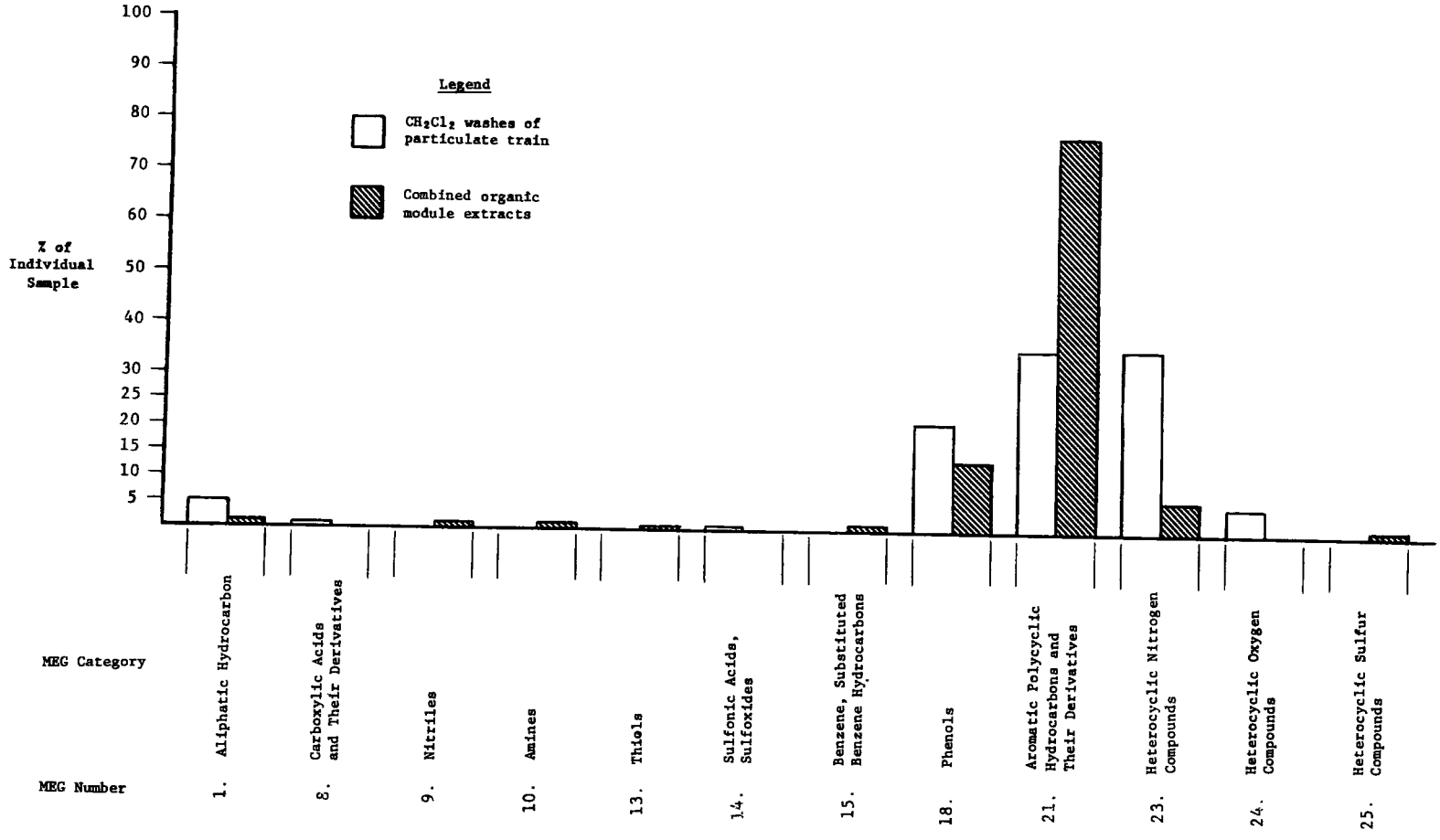

Figure 5-1. COMPARISON OF PARTICULATE TRAIN AND ORGANIC MODULE SAMPLES FOR COAL FEEDER VENT GASES

Table 5-3. SUMMARY OF LEVEL 1 CHEMICAL AND BIOASSAY TEST RESULTS FOR COAL FEEDER VENT GASES

Priority for Level 2 Chemical Analysis	Degree of Hazard Range	Compound Categories Found From Level 1 Chemical Analysis: Health Concern	Compound Categories Found From Level 1 Chemical Analysis: Ecological Concern	Results of the Bioassay Tests: Test	Results of the Bioassay Tests: Results
High	$10^7 - 10^8$	Fused aromatic hydrocarbons and their derivatives	-	Health[a]	
				• Ames	P
				• WI-38 (EC_{50})[b]	4×10^{-4}
	$10^6 - 10^7$	-	-	• RAM (EC_{50})[b]	$>2 \times 10^{-3}$
	$10^5 - 10^6$	-	C_2 hydrocarbons		
	$10^4 - 10^5$	-	-	Ecological	
	$10^3 - 10^4$	-	-	• Plant Stress Ethylene	N
	$10^2 - 10^3$	Cr	CO		
Medium	$10 - 10^2$	Heterocyclic nitrogen compounds, carboxylic acids & their derivatives, amines, sulfonic acids and sulfoxides, phenols, Hg, U, CO	NH_3, V, Hg		
Low	$1 - 10$	C_1, thiols, benzene and substituted benzene hydrocarbons, heterocyclic sulfur compounds, Al, NH_3, P, As, H_2S, Cu, Cd, NO, CO_2, HCN			

P: Positive
N: Negative

[a]Health bioassay tests were performed on the XAD-2 extract from the coal feeder vent gases

[b]EC_{50}'s were calculated on the XAD-2 extract for the coal feeder vent gases by:

$$EC_{50} = \begin{bmatrix} EC_{50} \text{ reported} \\ \text{in } \mu\ell \text{ of extract} \\ \text{per } m\ell \text{ culture} \end{bmatrix} \times \begin{bmatrix} \text{mg of organics} \\ \text{extracted per } m\ell \\ \text{of extract} \end{bmatrix} \times \begin{bmatrix} \text{mg of organics} \\ \text{per } Nm^3 \text{ of} \\ \text{vent gas} \end{bmatrix} = Nm^3 \text{ vent gas}/m\ell \text{ culture}$$

The estimated concentrations and degree of hazard values for the organic and inorganic compounds in the coal feeder vent stream are shown in Table 5-4. In this table, the estimated component concentrations are presented under four categories: the first three represent samples from distinct sources; the fourth represents the stream total. Analytical results listed under "Gases" were obtained on-site by analyzing gas phase samples. The results for organics under "Particulate Train" are from analyses of the particulate train CH_2Cl_2 washes, while the trace element concentrations are from SSMS analysis of the recovered particulates. Organic analyses results listed under "Organic Module" are from the combined SASS organic module CH_2Cl_2 rinses, pentane extracts of the XAD-2 resin, and the CH_2Cl_2 extracts of the condensate. Trace element analyses reported under this heading are a combination of the results from the XAD-2 resin, condensate, and the trace element impinger solutions. Values reported for ammonia, cyanide and thiocyanate were obtained by analyses of acid/base impinger-scrubber solutions. The degree of hazard values given in Table 5-4 were calculated from the estimated total stream concentrations.

It should be emphasized that this waste stream probably will not be present in new low-Btu gasification facilities. In new facilities, this stream will probably be controlled by combustion in a flare or incinerator or by recycling to the gasifier inlet air.

Separator Vent Stream -

A summary of the results from the Level 1 chemical analyses and bioassay tests for the separator vent stream is presented in Table 5-5. The separator vent stream contained significant concentrations of a variety of classes of organic compounds, particularly methane and other aliphatic hydrocarbons, amines, phenols, PAH's, and heterocyclic organics. Most of the degree of hazard values for the organic classes were greater than 1.

The concentrations of most of the inorganic species were lower than their respective MATE values. However, high concentrations of NH_3, HCN, NO, NO_2, CO, and H_2S were found. The trace element concentrations were generally low, with Na, K, Ca, P, Fe, Cu, and Ag found in the highest concentrations.

Table 5-4. SUMMARY OF TEST RESULTS - COAL FEEDER VENT GASES

MEG Category	Estimated Concentration ($\mu g/Nm^3$)				Degree of Hazard (Estimated Stream Conc./MATE Conc.)	
	Gases	Particulate Train	Organic Module	Stream Total	Health Concern	Ecological Concern
1. Aliphatic Hydrocarbons $<C_7$				2×10^6		
C_1	1×10^6				3	NA
C_2	8×10^5				0.1	8×10^5
C_3	2×10^5				0.02	NA
C_4	2×10^5				0.1	NA
C_5	8×10^4				0.04	NA
C_6	2×10^5				0.6	NA
1. Aliphatic Hydrocarbons $\geq C_7$ (Nonanes)		1×10^5	8×10^3	1×10^5	9×10^{-2}	NA
A. Alkanes and Cyclic Alkanes						
Alkanes						
Cycloalkanes						
B. Alkenes, Cyclic Alkenes, Dienes						
Alkenes						
2. Halogenated Aliphatic Hydrocarbons						
3. Ethers						
4. Halogenated Ethers						
5. Alcohols						
6. Glycols, Epoxides						
7. Aldehydes, Ketones						
8. Carboxylic Acids and Their Derivatives (Maleic Acid)		1×10^4	TR	1×10^4	10	NA
A. Carboxylic Acids						
Malonic Acid						
D. Esters						
Aliphatic Esters						
Phthalate Esters						
9. Nitriles (1-Cyanoethane)		TR	100	100	6×10^{-2}	NA
Naphthonitrile, alkyl series						
10. Amines (Aminotoluenes)			7×10^3	7×10^3	60	NA
C. Aromatic Amines and Diamines						
Aniline, alkyl series						
Benzidine						
Naphthalene Amine, alkyl series						
11. Azo Compounds and Hydrazine Derivatives						
12. Nitrosamines						
13. Thiols (Perchloromethanethiol)			2×10^3	2×10^3	3	NA
Aminothiophenol						
14. Sulfonic Acids, Sulfoxides (Dimethyl Sulfoxide)		1×10^4		1×10^4	10	NA
B. Sulfoxides						
Aromatic Sulfoxides						
15. Benzene, Substituted Benzene Hydrocarbons (Biphenyl)			8×10^3	8×10^3	8	NA
Benzene, alkyl series						
Indene						
16. Halogenated Aromatic Hydrocarbons						
17. Aromatic Nitro Compounds						
18. Phenols (2,2'-Dihydroxydiphenyls)		4×10^5	8×10^4	5×10^5	60	NA
A. Monohydrics						
Phenol, alkyl series						
B. Dihdrics, Polyhydrics						

Continued

Table 5-4. (Continued)

MEG Category	Estimated Concentration (μg/Nm³) Gases	Particulate Train	Organic Module	Stream Total	Degree of Hazard (Estimated Stream Conc./MATE Conc.) Health Concern	Ecological Concern
Phenol, Polyhydric						
C. Hydroxy Compounds with Fused Rings						
Fluorenol, alkyl series						
Naphthol, alkyl series						
19. Halophenols						
20. Nitrophenols						
21. Fused Aromatic Hydrocarbons and Their Derivatives (Benzo(a)pyrene)		8×10^5	4×10^5	9×10^5	4×10^7	NA
Acenaphthene						
Acenaphthylene, alkyl series						
Anthracene, alkyl series						
Benzopyrene, alkyl series						
Crysene						
Naphthalene, alkyl series						
Phenanthrene, alkyl series						
Pyrene, alkyl series						
22. Fused Non-Alternant Polycyclic Hydrocarbons		TR	TR	TR		
Fluoranthene						
Fluorene						
23. Heterocyclic Nitrogen Compounds (Pyrrole)		8×10^5	3×10^4	8×10^5	300	NA
B. Fused Six-Membered Ring Heterocycles						
Acridine						
Azabenzopyrene, alkyl series						
Azabenzofluoranthene, alkyl series						
Azapyrene, alkyl series						
Benzoquinoline, alkyl series						
Quinoline, alkyl series						
C. Pyrrole and Fused Ring Derivatives of Pyrrole						
Benzocarbazole, alkyl series						
Dibenzocarbazole, alkyl series						
Carbazole, alkyl series						
Indole, alkyl series						
24. Heterocyclic Oxygen Compounds (Tetrahydrofuran)		1×10^5		1×10^5	0.2	NA
Benzonaphthofuran						
25. Heterocyclic Sulfur Compounds (Benzonaphthothiophene)			1×10^3	1×10^3	1	NA
Dibenzothiophene, alkyl series						
26. Organometalics						
27. Lithium		1	9	10	0.5	NA
28. Sodium						
29. Potassium		1×10^4	8	1×10^4	NA	NA
30. Rubidium		0.5	10	10	8×10^{-2}	NA
31. Cesium						
32. Beryllium						
33. Magnesium			90	90	2×10^{-2}	NA
34. Calcium		900	400	1×10^3	8×10^{-2}	NA
35. Strontium		9	4	10	4×10^{-3}	NA
36. Barium		4	10	10	2×10^{-2}	NA
37. Boron		10	20	30	1×10^{-2}	NA
38. Aluminum		1×10^4	100	1×10^4	2	NA
39. Gallium		90		90	2×10^{-2}	NA
40. Indium						
41. Thallium			10	10	0.1	NA

Continued

Table 5-4. (Continued)

MEG Category	Estimated Concentration ($\mu g/Nm^3$) Gases	Particulate Train	Organic Module	Stream Total	Degree of Hazard (Estimated Stream Conc./MATE Conc.) Health Concern	Ecological Concern
42. Carbon						
Carbon Dioxide	1×10^7			1×10^7	1	NA
Carbon Monoxide	2×10^7			2×10^7	5×10^2	2×10^2
43. Silicon		1×10^3	7×10^4	8×10^3	0.8	NA
44. Germanium						
45. Tin		4	3	7	NA	NA
46. Lead		90	10	100	0.7	NA
47. Nitrogen						
Nitrogen Oxide	1×10^4			1×10^4	1	NA
Ammonia*			3×10^4	3×10^4	2	90
Cyanide*			1×10^4	1×10^4	1	0.3
48. Phosphorus		90	90	200	2	NA
49. Arsenic		<0.3	4	4	2	NA
50. Antimony		200	<2	200	0.4	NA
51. Bismuth			1	1	2×10^{-3}	NA
52. Oxygen (as O_3)						
53. Sulfur		500	10	500	NA	NA
Thiocyanate *			1×10^5	1×10^5	NA	NA
Sulfur Dioxide	4×10^3			4×10^3	0.3	NA
Carbonyl Sulfide	1×10^4			1×10^4	2×10^{-2}	NA
Hydrogen Sulfide	1×10^5			1×10^5	8	NA
Carbon Disulfide	2×10^4			2×10^4	0.3	NA
54. Selenium		10	0.1	10	6×10^{-2}	NA
55. Tellurium						
56. Fluorine (as F^-)		<10	<100	<100	4×10^{-2}	NA
Fluoride †			9	9	5×10^{-3}	NA
57. Chlorine (as Cl^-)		3×10^4	30	3×10^4	NA	NA
Chloride †			7×10^3	7×10^3	0.9	NA
58. Bromine (as Br^-)		70	0.1	70	NA	NA
59. Iodine (as I^-)		1	2×10^{-2}	1	NA	NA
60. Scandium		<0.8	0.4	1	2×10^{-5}	NA
61. Yttrium		2		2	2×10^{-3}	NA
62. Titanium		200	900	1×10^3	0.2	NA
63. Zirconium		0.4	1×10^3	1×10^3	0.2	NA
64. Hafnium						
65. Vanadium		8	70	80	0.2	80
66. Niobium		9	<400	400	2×10^{-2}	NA
67. Tantalum						
68. Chromium		50	700	800	8×10^2	NA
69. Molybdenum			300	300	6×10^{-2}	NA
70. Tungsten		4		4	4×10^{-3}	NA
71. Manganese			4	4	8×10^{-4}	NA
72. Iron		500	40	500	0.5	NA
73. Ruthenium						
74. Cobalt		10	0.7	10	0.2	NA
75. Rhodium						
76. Nickel			5	5	0.3	NA
77. Platinum						
78. Copper		400	30	400	2	NA

Continued

Table 5-4. (Continued)

MEG Category	Estimatee Concentration ($\mu g/Nm^3$)				Degree of Hazard (Estimated Stream Conc./MATE Conc.)	
	Gases	Particulate Train	Organic Module	Stream Total	Health Concern	Ecological Concern
79. Silver		2	0.1	2	0.2	NA
80. Gold						
81. Zinc		1×10^3	<30	1×10^3	0.3	NA
82. Cadmium			<30	<30	3	NA
83. Mercury		500	<0.4	500	10	50
84. Lanthanides						
Lanthanum		5	100	100	9×10^{-4}	NA
Cerium		5	50	60	2×10^{-3}	NA
Praseodymium						
Neodymium						
Samarium						
Dysprosium						
85. Actinides						
Uranium		30	700	700	80	NA
Thorium			10	10	2×10^{-2}	NA

* - Wet chemical analyses of impinger-scrubber solutions.

NA - MATE value not available

TR - Trace

† - Wet chemical analyses

Table 5-5. SUMMARY OF LEVEL 1 CHEMICAL AND BIOASSAY TEST RESULTS FOR SEPARATOR VENT GASES

Priority for Level 2 Chemical Analysis	Degree of Hazard Range	Compound Categories Found From Level 1 Chemical Analysis: Health Concern	Compound Categories Found From Level 1 Chemical Analysis: Ecological Concern	Results of the Bioassay Tests: Test	Results of the Bioassay Tests: Results
High	$10^7 - 10^8$	Fused aromatic hydrocarbons and their derivatives	-	Health	
				• Ames	SP
				• WI-38 (EC_{50})[b]	7×10^{-6}
	$10^6 - 10^7$	-	C_2 hydrocarbons	• RAM (EC_{50})[b]	1×10^{-5}
	$10^5 - 10^6$	-			
	$10^4 - 10^5$	-			
	$10^3 - 10^4$	Amines	NH_3		
	$10^2 - 10^3$	Heterocyclic nitrogen compounds, Cr, Ag, CO, phenols	CO, V		
Medium	$10 - 10^2$	Heterocyclic sulfur compounds, Cu, NO_2, NH_3, P, H_2S	-		
Low	$1 - 10$	Methane, halogenated aliphatic hydrocarbons, carboxylic acids & their derivatives, Li, HCN, P, As, CO_2, Fe, Ni, U, C_1, C_6 hydrocarbons	HCN, Hg		

SP: Slightly positive

[a]Health tests were performed on the XAD-2 extract from the separator vent gases

[b]EC_{50} were calculated on the XAD-2 extract for the separator vent gases by:

$$EC_{50} = \begin{bmatrix} EC_{50} \text{ reported} \\ \text{in } \mu\ell \text{ of extract} \\ \text{per m}\ell \text{ culture} \end{bmatrix} \times \begin{bmatrix} \text{mg of organics} \\ \text{extracted per m}\ell \\ \text{of extract} \end{bmatrix} \times \begin{bmatrix} \text{mg of organics} \\ \text{per Nm}^3 \text{ of} \\ \text{vent gas} \end{bmatrix} = \text{Nm}^3 \text{ vent gas/m}\ell \text{ culture}$$

The chemical categories having the highest priority for Level 2 chemical analysis are also shown in Table 5-5. These categories are fused aromatic hydrocarbons and their derivatives, amines, CO, NH_3, heterocyclic nitrogen compounds, Cr, V, Ag, C_2-hydrocarbons, and phenols.

The results of the bioassay tests performed on the XAD-2 extract sample indicated a low to moderate potential for hazardous health effects. Slightly positive results were obtained in the Ames test.

The estimated concentrations of organic and inorganic compounds found in the separator vent gases are given in Table 5-6. Again, the estimated concentrations are presented under four categories: the first three represent samples from distinct sources, while the fourth represents the stream total. Values for NH_3, HCN and F^- were determined from the organic module condensate. The degree of hazard values shown in Table 5-6 were calculated from the total stream concentrations.

As for the coal feeder vent, the separator vent stream should not be a waste stream from new gasification facilities. It will probably be recycled to the gasifier inlet air or product gas or it may be combusted in a flare.

5.2.3 Solid Waste Streams

The solid waste streams from the Chapman gasification facility were the gasifier ash and the cyclone dust. The Level 1 chemical and bioassay test results for these streams are presented in the following sections.

Gasifier Ash -

Table 5-7 presents a summary of the Level 1 chemical and bioassay test results for the gasifier ash. The major trace elements ($>10^3$ μg/g) identified in the ash were alkali metals, alkaline earths, Al, Si, Ti, and Fe. From the degree of hazard values in Table 5-7, the elements with the highest priority for Level 2 chemical analysis are P, Fe, Cu, Ca, Al, Ti, Cd, Ba, Pb, Se, Sb, B, Co, U, Be, Li and Cs.

Table 5-6. SUMMARY OF TEST RESULTS - SEPARATOR VENT GASES

MEG Category	Estimated Concentration ($\mu g/Nm^3$) Gases	Particulate Train	Organic Module	Stream Total	Degree of Hazard (Estimated Stream Conc./MATE Conc.) Health Concern	Ecological Concern
1. Aliphatic Hydrocarbons $<C_7$				4×10^6		
C_1	2×10^6				6	NA
C_2	1×10^6				0.2	1×10^6
C_3	4×10^5				0.04	NA
C_4	3×10^5				0.2	NA
C_5	1×10^5				0.05	NA
C_6	4×10^5				1	NA
1. Aliphatic Hydrocarbons $\geq C_7$ (Nonanes)		2×10^3	1×10^6	1×10^6	1	NA
A. Alkanes and Cyclic Alkanes						
Alkanes, C_6- C_{29}						
Cycloalkanes						
B. Alkenes, Cyclic Alkenes, Dienes						
Alkenes						
2. Halogenated Aliphatic Hydrocarbons (Lindone)		1×10^3		1×10^3	2	NA
A. Saturated Alkyl Halides						
Methyl Chloride						
3. Ethers						
4. Halogenated Ethers						
5. Alcohols						
6. Glycols, Epoxides						
7. Aldehydes, Ketones						
8. Carboxylic Acids and Their Derivatives		1×10^3		1×10^3	3	NA
(3-Hydroxypropanoic Acid Lactone)						
B. Carboxylic Acids with Additional Functional Groups						
Dichlorobenzoic Acid						
D. Esters						
Aliphatic Esters						
Phthalate Esters						
9. Nitriles						
10. Amines (Aminotoluenes)		100	2×10^5	2×10^5	2×10^3	NA
C. Aromatic Amines and Diamines						
Aniline, alkyl series						
11. Azo Compounds and Hydrazine Derivatives						
12. Nitrosamines						
13. Thiols						
14. Sulfonic Acids, Sulfoxides						
15. Benzene, Substituted Benzene Hydrocarbons		TR	TR	TR		
Benzene, alkyl series						
16. Halogenated Aromatic Hydrocarbons						
17. Aromatic Nitro Compounds						
18. Phenols (2,2'-Dihydroxydiphenyls)		2×10^3	2×10^6	2×10^6	3×10^2	NA
A. Monohydrics						
Phenol, alkyl series						
Phenyl Phenol						
C. Hydroxy Compounds with Fused Rings						
Indanol, alkyl series						
Naphthol						
19. Halophenols						

Continued

Table 5-6. (Continued)

MEG Category	Estimated Concentration ($\mu g/Nm^3$) Gases	Particulate Train	Organic Module	Stream Total	Degree of Hazard (Estimated Stream Conc./MATE Conc.) Health Concern	Ecological Concern
20. Nitrophenols						
21. Fused Aromatic Hydrocarbons and Their Derivatives (Benzo(a)pyrene)		2×10^3	2×10^6	2×10^6	1×10^8	NA
Acenaphthene						
Acenaphthylene						
Anthracene						
Benzochrysene, alkyl series						
Benzoperylene, alkyl series						
Benzopyrene, alkyl series						
Chrysene, alkyl series						
Dibenzopyrene, alkyl series						
Dihydrochrysene, alkyl series						
Naphthalene, alkyl series						
Phenanthrene						
Pyrene						
Tetrahydroanthracene						
22. Fused Non-Alternant Polycyclic Hydrocarbons		TR	TR	TR		
Fluoranthene						
Fluorene, alkyl series						
23. Heterocyclic Nitrogen Compounds (Dibenzo(c,d)carbazole)		3×10^3	1×10^5	1×10^5	1×10^2	NA
B. Fused Six-Membered Ring Heterocycles						
Azabenzoperylene						
Quinoline, alkyl series						
C. Pyrrole and Fused Ring Derivatives of Pyrrole						
Benzocarbazole						
Carbazole, alkyl series						
Indole, alkyl series						
24. Heterocyclic Oxygen Compounds (Tetrahydrofuran)		1×10^3		1×10^3	2×10^{-3}	NA
25. Heterocyclic Sulfur Compounds (Benzonaphthothiophene)		1×10^3	3×10^5	3×10^5	50	NA
Thiophene, alkyl series						
26. Organometalics						
27. Lithium				40	2	NA
28. Sodium				4×10^3	8×10^{-2}	NA
29. Potassium				2×10^3	NA	NA
30. Rubidium				0.5	4×10^{-6}	NA
31. Cesium						
32. Beryllium						
33. Magnesium				200	3×10^{-2}	NA
34. Calcium				2×10^3	0.1	NA
35. Strontium				20	6×10^{-3}	NA
36. Barium				40	8×10^{-2}	NA
37. Boron				3	1×10^{-3}	NA
38. Aluminum				40	8×10^{-3}	NA
39. Gallium				3	6×10^{-4}	NA
40. Indium						
41. Thallium						
42. Carbon						
Carbonate			2	2	NA	NA
Carbon Dioxide	3×10^7			3×10^7	3	NA
Carbon Monoxide	4×10^7			4×10^7	9×10^2	3×10^2

Continued

Table 5-6. (Continued)

MEG Category	Estimated Concentration ($\mu g/Nm^3$) Gases	Particulate Train	Organic Module	Stream Total	Degree of Hazard (Estimated Stream Conc./MATE Conc.) Health Concern	Ecological Concern
43. Silicon				300	3×10^{-2}	NA
44. Germanium						
45. Tin				8	NA	NA
46. Lead				30	0.2	NA
47. Nitrogen						
Nitrogen Oxide	4×10^4			4×10^4	NA	NA
Nitrogen Dioxide	3×10^5			3×10^5	30	NA
Ammonia *				7×10^5	40	3×10^3
Cyanide *			5×10^4	5×10^4	5	2
48. Phosphorus			3×10^3	3×10^3	30	NA
49. Arsenic				10	5	NA
50. Antimony				< 50	0.1	NA
52. Oxygen (as O_3)						
53. Sulfur				1×10^4	NA	NA
Sulfide			2×10^5	2×10^5	NA	NA
Sulfate			$< 5 \times 10^3$	$< 5 \times 10^3$	NA	NA
Thiocyanate *			1×10^5	1×10^5	NA	NA
Sulfur Dioxide	9×10^3			9×10^3	0.7	NA
Carbonyl Sulfide	4×10^4			4×10^4	9×10^{-2}	NA
Hydrogen Sulfide	2×10^5			2×10^5	10	NA
Carbon Disulfide	2×10^4			2×10^4	0.3	NA
54. Selenium				10	5×10^{-2}	NA
55. Tellurium						
56. Fluorine (as F^-)				< 50	2×10^{-2}	NA
Fluoride †			200	200	0.1	NA
57. Chlorine				200	NA	NA
58. Bromine				9	NA	NA
59. Iodine				1	NA	NA
60. Scandium				< 2	4×10^{-5}	NA
61. Yttrium						
62. Titanium				40	7×10^{-3}	NA
63. Zirconium				500	0.1	NA
64. Hafnium						
65. Vanadium				100	0.2	100
66. Niobium						
67. Tantalum						
68. Chromium				300	300	NA
69. Molybdenum				400	8×10^{-2}	NA
70. Tungsten				< 8	7×10^{-3}	NA
71. Manganese				50	1×10^{-2}	NA
72. Iron				2×10^3	2	NA
73. Ruthenium						
74. Cobalt				2	4×10^{-2}	NA
75. Rhodium						
76. Nickel				70	5	NA
77. Platinum						
78. Copper				2×10^3	10	NA
79. Silver				1×10^3	1×10^2	NA
80. Gold						
81. Zinc				100	3×10^{-2}	NA

Continued

Table 5-6. (Continued)

MEG Category	Estimated Concentration ($\mu g/Nm^3$)				Degree of Hazard (Estimated Stream Conc./MATE Conc.)	
	Gases	Particulate Train	Organic Module	Stream Total	Health Concern	Ecological Concern
82. Cadmium				0.9	9×10^{-2}	NA
83. Mercury				<0.3	6×10^{-3}	3
84. Lanthanides						
Lanthanum				3	3×10^{-5}	NA
Cerium				4	1×10^{-4}	NA
Praseodymium						
Neodymium						
Samarium						
Dysprosium						
85. Actinides						
Uranium				40	4	NA
Thorium						

NA - MATE values were not available

TR - Trace

* - Wet chemical analyses of impinger-scrubber solutions

† - Wet chemical analyses

Table 5-7. SUMMARY OF LEVEL 1 CHEMICAL AND BIOASSAY TEST RESULTS FOR GASIFIER ASH

Priority for Level 2 Chemical Analysis	Degree of Hazard Range	Compound Categories Found From Level 1 Chemical Analysis: Health Concern	Compound Categories Found From Level 1 Chemical Analysis: Ecological Concern	Results of the Bioassay Tests: Test	Results of the Bioassay Tests: Results
High	$10^5 - 10^6$	-	P	Health	
	$10^4 - 10^5$	-	Fe, Cu	• Ames	N
	$10^3 - 10^4$	Fe	Ca, Al, Ti, Cd	• RAM (EC_{50})[a]	>300
	$10^2 - 10^3$	Be, Li, Ca, Ba, Se, Cs, Cu	Ba, Pb, Se, Sb, V, Co, U	• R.A.T. - LD_{50}[b]	L >10
Medium	$10 - 10^2$	Mg, Sr, Al, Pb, P, Sb, Ti, Cr, Co, Cd, Si, Hg	Li, Mg, Cr, Be	Ecological • Soil Microcosm[c]	4
Low	$1 - 10$	Zr, V, U, Rb, F^-	As		

R.A.T.: Rodent Acute Toxicity test
N: Negative
L: Low toxicity (*i.e.*, no significant effects noted)

[a] EC_{50} values are reported in μg of solid per mℓ of culture

[b] LD_{50} values are in g of sample per Kg of rat

[c] Soil microcosm test results were ranked according to toxicity. The gasifier ash ranking of 4 was less toxic than the coal feed, cyclone dust and by-product tar and more toxic than the separator liquor.

The gasifier ash had the lowest toxicity in the soil microcosm test, showed negative results in the Ames test and gave signs of low toxicity in the rodent acute toxicity test. These results are not consistent with the degree of hazard values. This inconsistency may indicate that further chemical characterization and/or bioassay testing are needed.

Table 5-8 shows the estimated concentrations of organics and inorganics along with their respective degree of hazard values. The concentrations of extractable organics in the ash was ∿20 μg/g. Further organic analysis is needed since certain organic compounds, such as benzo-a-pyrene, have MATE values significantly lower than 20 μg/g.

Leaching tests are needed for determination of the types and amounts of trace elements that are leachable from the ash. Bioassay tests should be performed on the resulting leachate.

Cyclone Dust -

The results of the chemical and bioassay tests performed on the cyclone dust are summarized in Table 5-9. The major trace elements ($>10^3$ μg/g) found in the cyclone dust were Ca, Si, and P. While the concentrations of most of the trace elements found in the cyclone dust were lower than the concentrations found in the gasifier ash, most of the concentrations still exceeded their respective MATE values. The elements with the highest priority for Level 2 chemical analysis are P, Ni, Mn, Fe, Pb, Ba, Sb, Ti, and Cu.

The bioassay tests for the cyclone dust indicated a low potential for hazardous health effects; however, it was the most toxic of the samples tested in the soil microcosm test.

Table 5-10 shows the estimated concentrations and degree of hazard values for the inorganics found in the cyclone dust sample. The concentration of extractable organics was small (∿40 μg/g); however, further organic analysis is recommended since certain organic compounds have MATE values much lower than 40 μg/g.

Table 5-8. SUMMARY OF TEST RESULTS - GASIFIER ASH

MEG Category	Estimated Concentration (μg/g)	Degree of Hazard (Estimated Conc./MATE Conc.) Health Concern	Ecological Concern
1-26 Organic Species	~20		
27. Lithium	70	1×10^2	90
28. Sodium			
29. Potassium	1×10^4	NA	NA
30. Rubidium	2×10^4	5.5	NA
31. Cesium			
32. Beryllium	10	2×10^2	90
33. Magnesium	6×10^3	30	30
34. Calcium	5×10^4	1×10^2	2×10^3
35. Strontium	2×10^3	20	NA
36. Barium	2×10^3	2×10^2	4×10^2
37. Boron	20	0.2	0.4
38. Aluminum	3×10^3	20	2×10^3
39. Gallium	50	0.3	NA
40. Indium			
41. Thallium			
42. Carbon			
43. Silicon	7×10^3	20	NA
44. Germanium			
45. Tin	300	NA	NA
46. Lead	20	40	2×10^2
47. Nitrogen			
48. Phosphorus	800	30	8×10^5
49. Arsenic	<0.4	<0.8	<4
50. Antimony	200	10	5×10^2
51. Bismuth			
52. Oxygen (as O_3)			
53. Sulfur	1×10^3	NA	NA
54. Selenium	30	3×10^2	6×10^2
55. Tellurium			
56. Fluorine (as F^-)	< 200	<3	NA
57. Chlorine (as Cl^-)			
58. Bromine (as Br^-)			
59. Iodine (as I^-)			
60. Scandium	50	3×10^{-2}	NA
61. Yttrium	<20	<0.7	NA
62. Titanium	3×10^3	20	2×10^3
63. Zirconium	90	6	NA
64. Hafnium			
65. Vanadium	30	6	1×10^2
66. Niobium	20	3×10^{-2}	NA
67. Tantalum			
68. Chromium	30	60	60
69. Molybdenum			

Continued

Table 5-8. (Continued)

MEG Category	Estimated Concentration (μg/g)	Degree of Hazard (Estimated Conc./MATE Conc.) Health Concern	Ecological Concern
70. Tungsten			
71. Manganese			
72. Iron	1×10^4	4×10^3	2×10^4
73. Ruthenium			
74. Cobalt	50	30	1×10^2
75. Rhodium			
76. Nickel			
77. Platinum			
78. Copper	1×10^3	1×10^2	1×10^4
79. Silver			
80. Gold			
81. Zinc			
82. Cadmium	<9	<90	$<5 \times 10^3$
83. Mercury	<0.3	20	<0.6
84. Lanthanides			
Lanthanum	100	3×10^{-2}	NA
Cerium	90	8×10^{-2}	NA
Praseodymium			
Neodymium			
Samarium			
Dysprosium			
85. Actinides			
Uranium	400	3	4×10^2
Thorium			

NA: MATE values were not available.

Table 5-9. SUMMARY OF LEVEL 1 CHEMICAL AND BIOASSAY TEST RESULTS FOR CYCLONE DUST

Priority for Level 2 Chemical Analysis	Degree of Hazard Range	Compound Categories Found From Level 1 Chemical Analysis: Health Concern	Compound Categories Found From Level 1 Chemical Analysis: Ecological Concern	Results of the Bioassay Tests: Test	Results of the Bioassay Tests: Results
High	$10^6 - 10^7$	-	P	Health	
	$10^5 - 10^6$	-	-	• Ames	N
	$10^4 - 10^5$	-	-	• RAM (EC_{50})[a]	>1000
	$10^3 - 10^4$	-	Mn, Fe, Cu, Ni	• R.A.T. - LD_{50}[b]	M >10
	$10^2 - 10^3$	Pb, P, Mn, Fe, Ni	Ba, Pb, Sb, Ti		
				Ecological	
Medium	$10 - 10^2$	Cr, Cu, Ba	Ca, Al, V, Cr	• Soil Microcosm[c]	1
Low	$1 - 10$	Li, Mg, Ca, Sb, Zr, V, Co, Si, Ti	Li, Mg, As, Co		

R.A.T.: Rodent Acute Toxicity test
N: Negative
M: Medium toxicity (*i.e.*, rats showed hair loss, eye discoloration, etc.)

[a] EC_{50} values are reported in μg of sample per mℓ of culture

[b] LD_{50} values are in g of sample per Kg of rat

[c] Soil microcosm test results were ranked according to toxicity. The cyclone dust was more toxic than the coal feed, ash, tar and separator liquor.

Table 5-10. SUMMARY OF TEST RESULTS - CYCLONE DUST

MEG Category		Estimated Concentration (μg/g)	Degree of Hazard (Estimated Conc./MATE Conc.) Health Concern	Ecological Concern
1-26	Organic Species	∿40		
27.	Lithium	2	3	3
28.	Sodium			
29.	Potassium	4×10^3	NA	NA
30.	Rubidium	3	8×10^{-4}	NA
31.	Cesium			
32.	Beryllium			
33.	Magnesium	500	3	3
34.	Calcium	2×10^3	4	60
35.	Strontium	80	0.8	NA
36.	Barium	500	50	1×10^2
37.	Boron	7	8×10^{-2}	0.1
38.	Aluminum	100	0.6	50
39.	Gallium	<10	$<6 \times 10^{-2}$	NA
40.	Indium			
41.	Thallium			
42.	Carbon			
43.	Silicon	2×10^3	6	NA
44.	Germanium			
45.	Tin			
46.	Lead	60	1×10^2	6×10^2
47.	Nitrogen			
48.	Phosphorus	8×10^3	3×10^2	8×10^6
49.	Arsenic	<0.4	<0.8	<4
50.	Antimony	100	9	3×10^2
51.	Bismuth			
52.	Oxygen (as O_3)			
53.	Sulfur	300	NA	NA
54.	Selenium			
55.	Tellurium			
56.	Fluorine (as F^-)	100	>1	NA
57.	Chlorine (as Cl^-)			
58.	Bromine (as Br^-)			
59.	Iodine (as I^-)			
60.	Scandium	2	1×10^{-9}	NA
61.	Yttrium	10	0.3	NA
62.	Titanium	200	1	1×10^2
63.	Zirconium	30	2	NA
64.	Hafnium			
65.	Vanadium	20	4	70
66.	Niobium			
67.	Tantalum			

Continued

Table 5-10. (Continued)

MEG Category	Estimated Concentration (μg/g)	Degree of Hazard (Estimated Conc./MATE Conc.) Health Concern	Ecological Concern
68. Chromium	30	60	60
69. Molybdenum			
70. Tungsten			
71. Manganese	200	4×10^2	1×10^3
72. Iron	2×10^3	8×10^2	4×10^3
73. Ruthenium			
74. Cobalt	3	2	6
75. Rhodium			
76. Nickel	100	2×10^2	5×10^3
77. Platinum			
7°. Copper	900	90	9×10^3
79. Silver			
80. Gold			
81. Zinc			
82. Cadmium			
83. Mercury			
84. Lanthanides			
Lanthanum	20	6×10^{-3}	NA
Cerium	20	2×10^{-2}	NA
Praseodymium			
Neodymium			
Samarium			
Dysprosium			
85. Actinides			
Uranium			
Thorium			

NA: MATE value was not applicable

Leaching tests are needed, along with bioassay tests of the resulting leachate, if disposal in a landfill is to be considered. However, because of its high carbon content, cyclone dust may prove to be a salable by-product.

5.2.4 Potential Fugitive Emissions and Effluents

Fugitive emissions and effluents from pumps, valves, flanges, etc., can present significant health and environmental hazards. Three process streams, (raw product gas, separator liquor, and by-product tar) were considered in order to assess the hazard potential of fugitive emissions and effluents from this process.

Raw Product Gas -

The potential health and ecological effects of fugitive emissions of raw product gas were estimated using the results of chemical analysis of the coal feeder vent stream. It was assumed that raw product gas was diluted 1:10 by air in the vent stream. This dilution factor was based on the results of gaseous species analyzed in both the raw product gas and coal feeder vent gas. Table 5-11 shows the degree of hazard values for MEG categories estimated to be in the raw product gas. If significant quantities of this gas stream appear as fugitive emissions, the compound classes with the highest priority for Level 2 chemical analysis are given in this table.

Separator Liquor -

The separator liquor was found to contain high concentrations of organic compounds, especially the polar species expected to be associated with an aqueous medium. The major organic categories identified were thiols, phenols, and heterocyclic organics. Smaller amounts of carboxylic acids, glycols, and PAH's were found. Most of these organic categories had degree of hazard values greater than 1. A summary of the results of the Level 1 chemical and bioassay tests is given in Table 5-12.

Table 5-11. SUMMARY OF DEGREE OF HAZARD VALUES FOR MEG CATEGORIES ESTIMATED TO BE IN THE RAW PRODUCT GAS STREAM

Priority for Level 2 Chemical Analysis	Degree of Hazard Range[a]	Compound Categories Estimated in the Raw Product Gas: Health Concern	Compound Categories Estimated in the Raw Product Gas: Ecological Concern
High	$10^8 - 10^9$	Fused aromatic hydrocarbons and their derivatives	-
	$10^7 - 10^8$	-	-
	$10^6 - 10^7$	-	C_2 hydrocarbons
	$10^5 - 10^6$	-	-
	$10^4 - 10^5$	-	-
	$10^3 - 10^4$	Cr	CO
	$10^2 - 10^3$	Heterocyclic nitrogen compounds; carboxylic acids and their derivatives; amines; sulfonic acids and sulfoxides; phenols; Hg; U; CO	NH_3; V; Hg
Medium	$10 - 10^2$	Heterocylic sulfur compounds; thiols; benzene and substituted benzene hydrocarbons; Al; NH_3; P; As; Cu; Cd; H_2S; CO_2; NO; HCN; CH_4	-
Low	$1 - 10$	C_2, C_4 and C_6 hydrocarbons; heterocyclic oxygen compounds; Li; Tl; Si; Pb; Sb; SO_2; CS_2; Cl; Ti; Zr; V; Fe; Co; Ni; Zn; Ag	HCN

[a]Degree of hazard values for the raw product gas were estimated using the chemical analysis results from the coal feeder vent assuming a 1:10 dilution of raw product gas to air in the vent stream.

Table 5-12. SUMMARY OF THE LEVEL 1 CHEMICAL AND BIOASSAY TEST RESULTS FOR THE SEPARATOR LIQUOR

Priority for Level 2 Chemical Analysis	Degree of Hazard Range	Compound Categories Found from Level 1 Chemical Analysis		Results of the Bioassay Tests	
		Health Concern	Ecological Concern	Test	Results
High	$10^5 - 10^6$	Fused aromatic hydrocarbons and their derivatives	NH_3	Health	
				• Ames	N
				• RAM (EC_{50})[a]	>600
				• R.A.T.	L
	$10^4 - 10^5$	Phenols	CN^-, P	- LD_{50}[b]	>10
	$10^3 - 10^4$	NH_3, CN^-	Phenols, fused aromatic hydrocarbons and their derivatives	Ecological	
				• Fresh water[c]	
				- Algal (EC_{50}, 15 days)	0.1-1.0%
				- Daphnia (LC_{50}, 48 hr)	0.11%
	$10^2 - 10^3$	Heterocyclic nitrogen compounds	Carboxylic acids and their derivatives	- Fathead minnow (LC_{50}, 96 hr)	0.02%
Medium	$10 - 10^2$	Thiols, Se	Glycols and epoxides, As, Se	• Salt Water[c]	
				- Algal (EC_{50}, 12 days)	0.53/0.41%
				- Shrimp (LC_{50}, 96 hr)	0.25%
Low	1 - 10	Heterocyclic sulfur compounds, P, As, F^-, Cl^-	Ca, Fe, Cd	- Sheepshead minnow (LC_{50}, 96 hr)	0.16%
				• Soil microcosm[d]	5

R.A.T.: Rodent acute toxicity test
N : Negative
L : Low toxicity (i.e., no significant effects noted)

[a] EC_{50} values are reported in μg of sample per ml of culture.

[b] LD_{50} values are reported in g of sample per Kg of rat.

[c] EC_{50} and CO_{50} values for fresh and salt water bioassays are reported in weight percent of sample.

[d] Soil microcosm test results were ranked according to toxicity. The separator liquor was less toxic than the coal feed, ash, cyclone dust, and tar.

The results of the bioassay tests indicated that the sample was very toxic to aquatic species; however, it was least toxic in the soil microcosm test, and had negative results for health effects tests. Because of its toxic effects on aquatic species, it would be necessary to treat this liquor before discharge.

The estimated concentrations and degree of hazard values for the organics and inorganics in the separator liquor are shown in Table 5-13. The results of the water quality tests showed high levels of ammonia, cyanide, fluoride, chloride, carbonate and sulfate in the liquor. However, the concentration of sulfide was lower than expected. This, coupled with the high sulfate levels, indicates that considerable oxidation of dissolved sulfur species may occur. The quench liquor also contained high levels of B.O.D. and C.O.D. In addition, it contained high concentrations of suspended solids and total dissolved solids, was highly colored, and had a high oder threshold number.

By-Product Tar -

The chemical and bioassay test results for the by-product tar are summarized in Table 5-14. As expected, high concentrations of organics were found. Most organic compound classes present had a degree of hazard value greater than 1. A wide range of trace elements were also identified, with the major elements being K and S. Estimated concentrations and degree of hazard values for organics and inorganics in the tar are shown in Table 5-15.

The by-product tar was one of the most toxic samples collected. Positive results were obtained in the Ames and rodent acute toxicity tests. The soil microcosm test also showed a high potential for hazardous ecological effects. Because of the potential hazardous health effects exhibited by this stream, leaks around pumps, valves, etc., must be minimized and contained.

Table 5-13. SUMMARY OF TEST RESULTS - SEPARATOR LIQUOR

MEG Category	Estimated Concentration (µg/ℓ)	Degree of Hazard (Estimated Conc./MATE Conc.) Health Concern	Ecological Concern
1. Aliphatic Hydrocarbons (Nonanes, Heptanes)	3×10^4	2×10^{-3}	0.3
A. Alkanes and Cyclic Alkanes			
Alkanes, C_{10}-C_{18}			
Cycloalkanes			
B. Alkenes, Cyclic Alkenes, Dienes			
Alkenes			
2. Halogenated Aliphatic Hydrocarbons			
3. Ethers			
4. Halogenated Ethers			
5. Alcohols			
6. Glycols, Epoxides (Ethylene Glycol)	1×10^5	7×10^{-7}	10
A. Glycols			
Alkyl Glycols			
7. Aldehydes, Ketones			
8. Carboxylic Acids and Their Derivatives (Maleic, Acid, Acetic Acid)	1×10^5	7×10^{-2}	1×10^2
A. Carboxylic Acids			
Heptenoic Acid			
9. Nitriles			
10. Amines			
11. Azo Compounds and Hydrazine Derivatives			
12. Nitrosamines			
13. Thiols (Perchloromethanethiol)	5×10^5	40	NA
Thiophenol, alkyl series			
Thiophenol, Phenyl, alkyl series			
14. Sulfonic Acids, Sulfoxides			
15. Benzene, Substituted Benzene Hydrocarbons	TR		
Benzene, alkyl series			
16. Halogenated Aromatic Hydrocarbons			
17. Aromatic Nitro Compounds			
18. Phenols (all listings)	3×10^5	6×10^4	6×10^3
A. Monohydrics			
Phenol, alkyl series			
B. Dihydrics, Polyhdrics			
Benzene, Dihydroxy			
Benzene, Polyhydroxy			
C. Hydroxy Compounds with Fused Rings			
Acenaphthenol			
Indanol, alkyl series			
Napthol, alkyl series			
19. Halophenols			
20. Nitrophenols			
21. Fused Aromatic Hydrocarbons and Their Derivatives (Benzo(a)pyrene, Naphthalene)	1×10^5	3×10^5	1×10^3
Acenaphthylene			
Anthracene			
Benzopyrene			
Naphthalene			
Phenanthrene			
Pyrene			
22. Fused Non-Alternant Polycyclic Hydrocarbons			

Continued

Table 5-13. (Continued)

MEG Category	Estimated Concentration (μg/ℓ)	Degree of Hazard (Estimated Conc./MATE Conc.) Health Concern	Ecological Concern
23. Heterocyclic Nitrogen Compounds (Dibenzo(c,d)carbazole)	5×10^5	3×10^2	NA
C. Pyrrole and Fused Ring Derivatives of Pyrrole			
Benzo(a)carbazole			
Carbazole			
24. Heterocyclic Oxygen Compounds	TR		
25. Heterocyclic Sulfur Compounds (Benzonaphthothiophene)	5×10^4	3	NA
Dibenzothiophene, alkyl series			
26. Organometalics			
27. Lithium	3	9×10^{-3}	8×10^{-3}
28. Sodium			
29. Potassium	2×10^4	NA	NA
30. Rubidium	10	6×10^{-4}	NA
31. Cesium	1	8×10^{-7}	NA
32. Beryllium			
33. Magnesium	2×10^3	2×10^{-2}	2×10^{-2}
34. Calcium	2×10^4	8×10^{-2}	1
35. Strontium	80	2×10^{-3}	NA
36. Barium	300	6×10^{-2}	0.1
37. Boron	9×10^3	0.2	0.4
38. Aluminum			
39. Gallium			
40. Indium			
41. Thallium			
42. Carbon			
Carbon Monoxide			
Carbon Dioxide			
Carbonate	2×10^6	NA	NA
43. Silicon	2×10^3	1×10^{-2}	NA
44. Germanium			
45. Tin	30	NA	NA
46. Lead			
47. Nitrogen			
Ammonia	5×10^6	2×10^3	1×10^5
Cyanide (Alkali)	1×10^6	2×10^3	4×10^4
Nitrate			
Nitrite			
Nitric Oxide			
Nitrogen Dioxide			
48. Phosphorus	2×10^4	1	4×10^4
49. Arsenic	800	3	20
50. Antimony	70	9×10^{-3}	0.4
51. Bismuth			
52. Oxygen (as O_3)			
53. Sulfur	$< 8 \times 10^3$	NA	NA
Hydrogen Sulfide			
Carbonyl Sulfide			
Sulfur Dioxide			
Carbon Disulfide			
Thiocyanate *	70	NA	NA
Sulfide	$< 1 \times 10^4$	NA	NA
Sulfate	1×10^6	NA	NA

Continued

Table 5-13. (Continued)

MEG Category	Estimated Concentration (μg/ℓ)	Degree of Hazard (Estimated Conc./MATE Conc.) Health Concern	Ecological Concern
54. Selenium	2×10^{3}	40	80
55. Tellurium			
56. Fluorine (as F^-)	2×10^{3}	$<5 \times 10^{-2}$	NA
Fluoride *	2×10^{5}	4	NA
57. Chlorine (as Cl^-)	200	2×10^{-4}	NA
Chloride *	3×10^{6}	2	NA
58. Bromine (as Br^-)	300	NA	NA
59. Iodine (as I^-)	300	NA	NA
60. Scandium	2	3×10^{-6}	NA
61. Yttrium	5	3×10^{-4}	NA
62. Titanium	100	1×10^{-3}	0.1
63. Zirconium	10	1×10^{-4}	NA
64. Hafnium			
65. Vanadium			
66. Niobium	8	2×10^{-5}	NA
67. Tantalum			
68. Chromium			
69. Molybdenum			
70. Tungsten	10	7×10^{-4}	NA
71. Manganese			
72. Iron	1×10^{3}	0.9	4
73. Ruthenium			
74. Cobalt			
75. Rhodium			
76. Nickel			
77. Platinum			
78. Copper	10	2×10^{-3}	0.2
79. Silver	2	8×10^{-3}	0.4
80. Gold			
81. Zinc			
82. Cadmium	5	0.1	5
83. Mercury	$<3 \times 10^{-4}$	$<3 \times 10^{-5}$	$<1 \times 10^{-6}$
84. Lanthanides			
Lanthanum	7	4×10^{-6}	NA
Cerium	3	5×10^{-6}	NA
Neodymium			
Samarium			
Dysprosium			
85. Actinides			
Uranium			
Thorium			

* Determined by wet chemical methods.

NA: MATE value was not applicable
TR: Trace

Table 5-14. SUMMARY OF LEVEL 1 CHEMICAL AND BIOASSAY TEST RESULTS FOR BY-PRODUCT TAR

Priority for Level 2 Chemical Analysis	Degree of Hazard Range	Compound Categories Found from Level 1 Chemical Analysis		Results of the Bioassay Tests	
		Health Concern	Ecological Concern	Test	Result
High	$10^7 - 10^8$	Fused aromatic hydrocarbons and their derivatives	Carboxylic acids and their derivatives	Health • Ames • RAM (EC_{50})[a] • R.A.T. - LD_{50}[b]	 P >1000 H >10
	$10^6 - 10^7$	Phenols	-		
	$10^5 - 10^6$	-	Halogenated aliphatic hydrocarbons, amines	Ecological • Soil microcosm[c]	 2
	$10^4 - 10^5$	Amines, benzene and substituted benzene hydrocarbons, heterocyclic nitrogen compounds	Benzene and substituted benzene hydrocarbons, phenols		
	$10^3 - 10^4$	Halogenated aliphatic hydrocarbons, heterocyclic sulfur compounds	Cu, Cd		
	$10^2 - 10^3$	Carboxylic acids and their derivatives, Cr	Aliphatic hydrocarbons, Pb, Sb, Cr		
Medium	$10 - 10^2$	Ba, Pb, Cu, Cd	Ba		
Low	$1 - 10$	Aliphatic hydrocarbons, heterocyclic oxygen compounds, Sb, Hg, Mg	As, V		

R.A.T.: Rodent acute toxicity test
P : Positive
H : High toxicity

[a] EC_{50} values are reported in μg of sample per ml of culture

[b] LD_{50} values are reported in g of sample per Kg of rat

[c] Soil microcosm test results were ranked according to toxicity. The by-product tar was less than the cyclone dust and more toxic than the coal feed, ash and separator liquor.

Table 5-15. SUMMARY OF TEST RESULTS - BY-PRODUCT TAR

	MEG Category	Estimated Concentration (μg/g)	Degree of Hazard (Estimated Conc./MATE Conc.) Health Concern	Ecological Concern
1.	Aliphatic Hydrocarbons (Nonanes, Heptanes)	1×10^5	3	5×10^2
	A. Alkanes and Cyclic Alkanes			
	Alkanes, C_{10}-C_{18}			
2.	Halogenated Aliphatic Hydrocarbons (Lindone)	4×10^4	3×10^3	2×10^5
	A. Saturated Alkyl Hydrocarbons			
	Methyl Chloride			
3.	Ethers			
4.	Halogenated Ethers			
5.	Alcohols			
6.	Glycols, Epoxides			
7.	Aldehydes, Ketones			
8.	Carboxylic Acids and Their Derivatives (Phthalates)	4×10^4	3×10^2	2×10^7
	D. Esters			
	Aliphatic Esters			
	Phthalate Esters			
9.	Nitriles			
10.	Amines (Methyl Anilines, Aminonaphthalene)	6×10^4	2×10^4	3×10^5
	C. Aromatic Amines and Diamines			
	Aniline, alkyl series			
11.	Azo Compounds and Hydrazine Derivatives			
12.	Nitrosamines			
13.	Thiols			
14.	Sulfonic Acids, Sulfoxides			
15.	Benzene, Substituted Benzene Hydrocarbons (Indene, Alkyl Benzene)	4×10^4	3×10^4	2×10^4
	Benzene, alkyl series			
16.	Halogenated Aromatic Hydrocarbons			
17.	Aromatic Nitro Compounds			
18.	Phenols (all listings)			
	A. Monohydrics	8×10^4	8×10^6	8×10^4
	Phenol, alkyl series			
19.	Halophenols			
20.	Nitrophenols			
21.	Fused Aromatic Hydrocarbons and Their Derivatives (Dibenz(a,h)anthracene)	3×10^5	1×10^8	NA
	Acenaphthene, alkyl series			
	Acenaphthylene, alkyl series			
	Anthracene, alkyl series			
	Benzopyrene, alkyl series			
	Chrysene, alkyl series			
	Coronene, alkyl series			
	Naphthalene, alkyl series			
	Phenanthrene			
	Pyrene, alkyl series			
22.	Fused Non-Alternant Polycyclic Hydrocarbons	TR		
	Fluoranthene			

Continued

Table 5-15. (Continued)

	MEG Category	Estimated Concentration (μg/g)	Degree of Hazard (Estimated Conc./MATE Conc.) Health Concern	Ecological Concern
23.	Heterocyclic Nitrogen Compounds (Dibenzo(c,d)carbazole)	2×10^5	7×10^4	NA
	A. Fused Six-Membered Ring Heterocycles			
	Quinoline, alkyl series			
	C. Pyrrole and Fused Ring Derivatives of Pyrrole			
	Carbazole, alkyl series			
24.	Heterocyclic Oxygen Compounds (Tetrahydrofuran)	1×10^5	6	NA
	Benzonaphthofuran			
25.	Heterocyclic Sulfur Compounds (Benzonaphthothiophene)	1×10^5	3×10^3	NA
26.	Organometalics			
27.	Lithium			
28.	Sodium			
29.	Potassium	3×10^3	NA	NA
30.	Rubidium	0.5	1×10^{-4}	NA
31.	Cesium			
32.	Beryllium			
33.	Magnesium	2×10^2	1	0.3
34.	Calcium			
35.	Strontium	20	0.2	NA
36.	Barium	50	50	10
37.	Boron	1	0.01	0.02
38.	Aluminum			
39.	Gallium	<9	<0.06	NA
40.	Indium			
41.	Thallium			
42.	Carbon			
43.	Silicon			
44.	Germanium			
45.	Tin			
46.	Lead	50	90	5×10^2
47.	Nitrogen			
48.	Phosphorus			
49.	Arsenic	<0.2	<0.4	<2
50.	Antimony	80	6	2×10^2
51.	Bismuth	5	0.4	NA
52.	Oxygen (as O_3)			
53.	Sulfur	2×10^3	NA	NA
54.	Selenium	3×10^{-3}	3×10^{-2}	6×10^{-2}
55.	Tellurium			
56.	Fluorine (as F^-)	20	<0.3	NA
57.	Chlorine (as Cl^-)			
58.	Bromine (as Br^-)			
59.	Iodine (as I^-)	5	NA	NA
60.	Scandium	<1	6×10^{-4}	NA
61.	Yttrium	1	3×10^{-2}	NA
62.	Titanium			
63.	Zirconium			
64.	Hafnium			
65.	Vanadium	1	0.2	2

Continued

Table 5-15. (Continued)

MEG Category	Estimated Concentration (μg/g)	Degree of Hazard (Estimated Conc./MATE Conc.) Health Concern	Ecological Concern
66. Niobium	≤ 5	$\leq 8 \times 10^{-3}$	NA
67. Tantalum			
68. Chromium	50	100	100
69. Molybdenum			
70. Tungsten			
71. Manganese			
72. Iron			
73. Ruthenium			
74. Cobalt			
75. Rhodium			
76. Nickel			
77. Platinum			
78. Copper	300	30	3×10^{3}
79. Silver			
80. Gold			
81. Zinc			
82. Cadmium	<6	<60	$<3 \times 10^{3}$
83. Mercury	6×10^{-2}	3	0.1
84. Lanthanides			
Lanthanum	5	1×10^{-3}	NA
Cerium	5	4×10^{-3}	NA
Praseodymium			
Neodymium			
Samarium			
Dysprosium			
85. Actinides			
Uranium			
Thorium			

NA: MATE value was not available
TR: Trace

5.2.5 Summary of Cyclone Particulate Removal Efficiency Test

Particulates removed from the raw product gas stream consisted of coal dust, ash and tar. Overall particulate removal efficiency was determined by collecting particulates in in-stream alundum thimbles placed at the inlet and outlet of a cyclone. The average total particulate removal efficiency for the cyclone was 62 percent with values ranging from 29 to 78 percent. Table 5-16 shows the average particulate loadings found in the product gas entering and exiting the hot cyclone.

TABLE 5-16 PARTICULATE LOADINGS IN THE PRODUCT LOW-BTU GAS ENTERING AND EXITING THE HOT CYCLONE

Run Number	Particulate Concentration ($\mu g/Nm^3$) Inlet	Outlet	Cyclone Removal Efficiency (%)
1	1.1	0.79	29
2	1.5	0.36	76
3	1.7	0.57	66
4	2.4	0.54	78

5.2.6 Additional Results

Additional results not reported in the Level 1 summary tables were:

- additional water quality parameters,
- proximate and ultimate analyses, and
- product gas analyses.

Water Quality Parameters -

Additional water quality data were obtained on the separator liquor and on the condensables collected during the separator vent stream SASS train run. These data are shown in Table 5-17. Both samples contained high levels of BOD and COD. The separator liquor also contained high levels of dissolved and suspended solids, which was to be expected for the recirculating quench liquor.

Proximate and Ultimate Analyses -

Table 5-18 lists the results of the proximate and ultimate analyses performed on the coal feedstock, gasifier ash, cyclone dust and by-product tar. The heating value and free swelling index for the coal feed are also reported in this table.

From the data in Table 5-18, it appears that the cyclone dust is a char-like material (*e.g.*, devolatilized coal). Also, only minor quantities of sulfur are present in the ash and tar.

Product Gas Analyses -

The data collected from analyses of the raw and clean product gases are presented in Table 5-19. Also included in this summary is the estimated composition of the coal feeder vent gas without its dilution air. All of the data presented were obtained from on-site analyses of gaseous grab samples, except for HCN which was sampled through aqueous base impinger-scrubbers and analyzed by standard wet chemical methods.

The concentrations presented for the four sulfur species in the raw product gas are suspiciously low, compared to previously reported data for coal gasification facilities. As previously mentioned, gas samples collected through tar-laden filters tended to lose sulfur species, presumably by sorption into and/or reaction with the tar. Because the raw product gas was sampled through multiple filters, to prevent tar from plugging the sampling train, it is possible that the results of the sulfur species analyses are not representative of the actual concentrations present in the raw product gas.

TABLE 5-17. SUMMARY OF ADDITIONAL WATER QUALITY PARAMETERS FOR THE SEPARATOR LIQUOR AND SASS TRAIN CONDENSATE FROM THE SEPARATOR VENT

	Separator Vent SASS Condensate	Separator Liquor
Color (Pt-Co units)	NC	5000
Odor (Threshold No.)	NC	4000
pH	9.56	7.66
TDS (μg/mℓ)	218	6300
TSS (μg/mℓ)	14.5	144
COD (μg/mℓ)	8200	22,200
BOD (μg/mℓ)	3900	6530
DO (μg/mℓ)	NC	ND
Conductivity (μmhos)	NC	32,000
Hardness	*	*
Alkalinity (as $CaCO_3$) (μg/mℓ)	2880	2140
Acidity (μg/mℓ)	NA	NA

* Level 1 test method failed.

SASS: Source Assessment Sampling System
NC: Test not conducted
ND: Not determined
NA: Not applicable

TABLE 5-18. PROXIMATE AND ULTIMATE ANALYSES RESULTS FOR THE COAL FEED, GASIFIER ASH, CYCLONE DUST AND BY-PRODUCT TAR

	Coal Feed	Gasifier Ash	Cyclone Dust	By-Product Tar**
Wt% (DAF)				
Carbon	83.75	*	92.42	77.30
Hydrogen	5.25	ND	0.93	6.06
Nitrogen	1.90	ND	1.69	1.42
Sulfur	0.62	0.21	0.70	0.52
Oxygen (by difference)	8.48	-	4.26	-
Wt% (as received)				
Volatiles	36.32	-	ND	-
Fixed carbon	56.67	-	NR	-
Ash	5.61	ND	12.53	0.97
Moisture	1.40	ND	-	-
Heating Value				
MJ/Kg	31.82			
Btu/lb	13,690	-		
Free Swelling Index	5.0			

Source: All analyses were performed by the Institute for Mining and Minerals Research (IMMR), Lexington, KY.

* Interference in the analysis
** All analyses for the tar are on an "as received" basis

ND: Not determined
DAF: Dry, ash free basis
-: Analysis not performed

Table 5-19. RESULTS FOR GASEOUS SPECIES IN THE RAW AND CLEAN PRODUCT GAS

	Raw Product Gas #2 Cyclone Overhead	Estimated Coal Feeder Vent Gas Without Dilution Air	Clean Product Gas after the Final Spray Scrubber
Nitrogen	7×10^8 (56%)		6.8×10^8 (54%)
Carbon Dixoide	1.7×10^8 (8.5%)		1.7×10^8 (8.8%)
Oxygen	1.7×10^7 (1.2%)		1.4×10^7 (1.0%)
Hydrogen	1.3×10^7 (14.5%)	2×10^7 (23%)	1.3×10^7 (14.9%)
Carbon Monoxide	2.5×10^8 (19.7%)	2.1×10^8 (16%)	2.7×10^8 (21.3%)
Nitric Oxide	1.1×10^5 (96 vppm)	1.2×10^5 (100 vppm)	1.3×10^5 (109 vppm)
Nitrogen Dioxide	NA	NA	NA
Hydrogen Sulfide	2.8×10^5 (251 vppm)	1.4×10^6 (900 vppm)	4.4×10^5 (291 vppm)
Carbonyl Sulfide	7.5×10^4 (28 vppm)	1.1×10^5 (39 vppm)	8.3×10^4 (31 vppm)
Carbon Disulfide	2.4×10^4 (7 vppm)	2.4×10^5 (70 vppm)	6.1×10^4 (18 vppm)
Sulfur Dioxide	1.8×10^4 (6 vppm)	4.5×10^4 (15 vppm)	2.9×10^4 (10 vppm)
Cyanide (as HCN)	1.0×10^5 (86 vppm)	1.2×10^5 (97 vppm)	NA
Hydrocarbons			
Methane	1.4×10^8 (1.5%)	1.3×10^8 (1.8%)	1.4×10^8 (1.9%)
C_2 (as ethane)	8.4×10^6 (6.3×10^3 vppm)	8.4×10^6 (6.3×10^3 vppm)	8.5×10^6 (6.4×10^3 vppm)
C_3 (as propane)	3.3×10^6 (1.7×10^3 vppm)	2.1×10^6 (1.1×10^3 vppm)	3.6×10^6 (1.8×10^3 vppm)
C_4 (as butane)	2.2×10^6 (884 vppm)	2.3×10^6 (870 vppm)	2.6×10^6 (998 vppm)
C_5 (as pentane)	1.2×10^6 (358 vppm)	9.4×10^5 (280 vppm)	1.1×10^6 (327 vppm)
C_6 (as hexane)	2.7×10^6 (706 vppm)	2.3×10^6 (660 vppm)	2.6×10^6 (686 vppm)

Units: $\mu g/m^3$ (vol % or vppm)
NA: Not analyzed

Since the gas emitted from the coal feeder vent was determined to be raw product gas diluted with air, an estimate of the raw gas composition was made by subtracting out the diluent air from this stream. The gas to air ratio was estimated to be approximately 1:10, based on the average analyses of H_2, O_2, CO, NO, and hydrocarbons in the raw product gas, clean product gas and coal feeder vent gas. The estimated concentrations of most species correspond closely to those found in the actual product gas analyses. However, the sulfur species concentrations estimated from the coal feeder vent analyses are considerably higher than those found in the raw gas. This might be expected since the coal feeder vent grab sample was not pulled through a tar-laden filter. However, the estimated concentrations for sulfur species should not necessarily be considered more representative than those found by analysis of actual samples from the raw product gas stream.

The sampling and analyses of the clean product gas were accomplished without interferences from tar or water. The analytical results for this stream are also shown in Table 5-19.

SECTION 6.0

CONCLUSIONS AND RECOMMENDATIONS

Conclusions and recommendations developed as a result of the STE program conducted at the Chapman facility fall into two categories: those resulting from the characterization of waste and process streams and those resulting from the evaluation of Level 1 methodology.

6.1 WASTE AND PROCESS STREAMS

An overall summary of the character of the waste and process streams at the Chapman facility is presented in Table 6.1. As indicated in this table, all of the streams tested contained potentially hazardous organic and/or inorganic materials. In the case of cyclone dust and coal feeder and separator vent gases, this conclusion is confirmed by the results of the bioassay screening tests. However, in the case of the gasifier ash, the degree of hazard indicates a moderate potential hazard while bioassay tests indicate a low potential.

Recommendations for future data needs are presented in Tables 6-2 and 6-3. Priorities shown for Level 2 chemical and biological analyses of chemical compound classes in each waste stream are based on the results of SAM/1A analyses. Specific conclusions and recommendations based on the characterization of waste and process streams at the Chapman facility are given in the following text.

6.1.1 Gaseous Waste Streams

Coal Feeder Vent Gas -

The coal feeder vent gas contained organics, inorganic gases and trace elements at potentially hazardous concentrations (greater than their MATE values). The bulk of the organics consisted of tar particulates. Volatile organics were also present. Their compositions were significantly different from those of

Table 6-1. CHARACTERISTICS OF WASTE STREAMS AND POTENTIAL FUGITIVE EMISSIONS AND EFFLUENTS FROM THE CHAPMAN FACILITY

Stream Description	Stream Source	Stream Degree of Hazard: Health Concern	Stream Degree of Hazard: Ecological Concern	Bioassay Tests: Health[b]	Bioassay Tests: Ecological[c]	Remarks and Conclusions
Gaseous Waste Streams						
• Coal Feeder Vent Gas	Coal feeder	4×10^7	8×10^5	High	High	The SAM/1A[d] analysis and the bioassay test results of this waste stream indicated that it may have potentially hazardous health and ecological effects. However, it should be emphasized that this stream should NOT be a waste stream from new gasification plants, and should be controlled by recycling to the gasifier inlet air or product gas or by combusting it in a boiler or flare. The organic content in this stream was high with the major classes of organics being polycyclic aromatic hydrocarbons (PAH's), heterocyclic nitrogen compounds and phenols. Gaseous compounds in the product gas (CO, H_2, CH_4, H_2S, COS, HCN, etc.) were also found in the coal feeder vent stream.
• Separator Vent Gas	Tar/liquor separator	1×10^8	1×10^6	High	NC	The results from the bioassay tests and SAM/1A analysis indicated that this stream may have potentially hazardous health and ecological effects. As for the coal feeder vent stream, this stream should NOT be a waste stream from new gasification plants. It may be controlled by recycling to the gasifier inlet air or product gas or by combusting it in a boiler or flare. The organic concentration in this stream was high, with the major organic classes being PAH's and phenols. Gaseous compounds in the product gas (CO, H_2, CH_4, H_2S, COS, HCN, etc.) were also found in the separator vent stream.
Solid Waste Streams						
• Gasifier Ash	Gasifier	5×10^3	8×10^5	Low	Low	The results of a SAM/1A analysis of the gasifier ash indicated that it may have a moderate potential for hazardous health and ecological effects. However, the results of the bioassay tests showed that the ash had a low potential for hazardous health and ecological effects. The extractable organic concentration in the ash was ~20 μg/g; trace element concentrations were similar to the amounts of trace elements found in the ash from coal-fired boilers. The major trace elements found in the ash were alkali metals. Leaching tests are needed to determine appropriate design for landfills as final ash disposal sites.

Continued

Table 6-1. (Continued)

Stream Description	Stream Source	Stream Degree of Hazard: Health Concern	Stream Degree of Hazard: Ecological Concern	Bioassay Tests: Health[b]	Bioassay Tests: Ecological[c]	Remarks and Conclusions
• Cyclone Dust	Hot Cyclone	2×10^3	8×10^6	Low	High	From the results of a SAM/1A analysis, the cyclone dust could be potentially hazardous. The ecological bioassay test (soil microcosm) indicated that the dust had a high potential for hazardous effect, while the health effects test showed the dust had a low potential. The concentration of extractable organics in the dust was low (~40 μg/g). The trace elements having the highest concentrations were P, K, Si and Fe. The carbon content of the dust was high (~92%) which indicates that the dust is similar to devolatilized coal. If the dust is to be disposed of in a landfill, leaching tests are necessary; however, combustion of the dust is probably required before disposal.
Potential Fugitive Emissions						
• Raw Product Gas[e]	Gasifier and hot cyclone pokeholes	2×10^8	4×10^3	NC	NC	Fugitive emissions will contain tar particulates, volatile organics and inorganics in potentially hazardous concentrations. The characteristics of these emissions will be similar to those of the coal feeder vent gas.
Potential Fugitive Effluents						
• Separator Liquor (liquid)	Tar/liquor separator	3×10^5	2×10^5	Low	High	The separator liquor contained high levels of organics. These consisted primarily of thiols, phenols and heterocyclic aromatics. High levels of cyanide, ammonia, fluoride and sulfate were also found. High concentrations of sulfide were not found which may indicate that hydrogen sulfide sorbed in the quench either escapes as H_2S in the vent gases or is oxidized to sulfate. Separator liquor was found to be very toxic to aquatic species and should not be discharged without prior treatment.
By-product Tar (solid)	Tar/liquor separator	1×10^8	2×10^7	High	High	The by-product tar was the most potentially hazardous sample tested. A wide range of organics was found to be present. The main classes of organics were PAH's and heterocyclic nitrogen, oxygen and sulfur compounds. High levels of trace elements were also found.

[a] Degree of Hazard for a stream is the sum of the estimated concentrations of components (or classes of components) in the stream divided by their respective MATE values.

[b] Health tests include: Ames, Cytotoxicity (WI-38, RAM) and Rodent Acute Toxicity

[c] Ecological tests include: soil microcosm, plant stress ethylene, fresh water bioassay (algal, daphnia and fathead minnow) and salt water bioassay (algal, shrimp and sheepshead minnow).

[d] Source Assessment Model/1A

[e] Degree of Hazard values were estimated from the coal feeder vent gases by assuming a 1:10 gas to air dilution in the vent stream.

NC: Test not conducted

Table 6-2. RECOMMENDATIONS FOR FUTURE DATA NEEDS FOR WASTE STREAMS

Waste Stream	Total Stream Degree of Hazard: Health Concern	Total Stream Degree of Hazard: Ecological Concern	Stream Components Priority for Level 2 Chemical Analysis: High Priority Degree of Hazard $10^3 - 10^7$	Medium Priority Degree of Hazard $10^2 - 10$	Low Priority Degree of Hazard $10 - 1$	Remarks & Recommendations
Separator Vent	1×10^6	1×10^5	Fused aromatic hydrocarbons and their derivatives, amines, heterocyclic nitrogen compounds, CO, NH_3, Cr, Ag, V, C_2 hydrocarbons, phenols	Heterocyclic sulfur compounds, Cu, NO_2, P, H_2S	Methane, halogenated aliphatic hydrocarbons, carboxylic acids and their derivatives, Li, HCN, As, CO_2, Fe, Ni, U, C_6 hydrocarbons	This stream should be controlled in new gasification facilities. Further characterization should be directed toward the control technique for this stream, *e.g.*, if the control device for this stream is combustion, then detailed chemical characterization around the combustor will be neccesary, along with bioassay tests of the resulting combustion products.
Coal Feeder Vent	4×10^7	8×10^5	Fused aromatic hydrocarbons and their derivatives, CO, Cr, C_2 hydrocarbons	Carboxylic acids and their derivatives, amines, sulfonic acids and sulfoxides, phenols, NH_3, Hg, U, V, heterocyclic nitrogen compounds	Methane, thiols, benzene and substituted benzene hydrocarbons, Al, P, As, H_2S, Cu, Cd, NO, CO_2, HCN, heterocyclic sulfur compounds	As for the separator vent stream, this stream should be controlled in new gasification facilities. Further characterization should be directed toward the control technique for this stream, *e.g.*, if this stream is to be controlled by combustion (flaring, incineration, etc.), then detailed chemical characterization around the combustion process would be necessary, along with bioassay tests of the combustion products.
Gasifier Ash	5×10^3	8×10^6	Be, P, Fe, Ca, Al, Li, Ba, Se, Pb, Cs, Cu, Ti, Cd, Sb, V, Co, U	Mg, Sr, Cr, Co, Si, Hg,	Zr, F, Rb, As	Even though the amount of extractable organics was low (~20 μg/g), certain organic constitutents may exist at levels exceeding their respective MATE values. Therefore, further analysis of this extract is recommended. The analysis should be directed specifically toward identifying specific organic species (*i.e.*, benzo-a-pyrene). The gasifier ash contained high concentrations of trace elements; however, the results of the bioassay tests indicated that the ash had a low potential for hazardous health or ecological effects. Leaching tests are recommended along with bioassay tests on the resulting leachate.
Cyclone Dust	2×10^3	8×10^5	Ni, Pb, P, Mn, Fe, Cu, Ba, Sb, Ti	Cr, Ca, Al, V	Li, Mg, Zr, Co, As, Si	As for the ash, further organic analysis is recommended for specific hazardous organic species in the extractable organics in the cyclone dust. Because of the high carbon content, the cyclone dust should be combusted or recycled to the gasifier. If the dust is to be landfilled, leaching tests and bioassay tests on the resulting leachate are recommended.

Table 6-3. RECOMMENDATIONS FOR FUTURE DATA NEEDS FOR POTENTIAL FUGITIVE EMISSIONS AND EFFLUENTS

Fugitive Emissions & Effluents	Total Stream Degree of Hazard: Health Concern	Total Stream Degree of Hazard: Ecological Concern	Stream Components Priority for Level 2 Chemical Analysis: High Priority Degree of Hazard $10^3 - 10^2$	Medium Priority Degree of Hazard $10^2 - 10$	Low Priority Degree of Hazard $10 - 1$	Remarks & Recommendations
Raw Product Gas	4×10^6	8×10^5	Fused aromatic hydrocarbons and their derivatives, heterocyclic nitrogen compounds, Cr, CO, carboxylic acids and their derivatives, amines, sulfonic acids and sulfoxides, phenols, Hg, U, NH_3, V, C_2 hydrocarbons	Thiols, benzenes and substituted benzene hydrocarbons, Al, P, As, Cu, Cd, H_2S, CO_2, NO, HCN, methane, heterocyclic sulfur compounds	C_4 and C_5 hydrocarbons, heterocyclic oxygen compounds, Li, Tl, Si, Pb, Sb, SO_2, CS_2, Cl, Ti, Zr, Fe, Co, Ni, Ag, Zn	Sources of raw product gas fugitive emissions are primarily pokeholes and abnormal process operation. Because of the potentially hazardous nature of the raw product gas, control of pokehole emissions is required. This can be achieved by injecting an inert gas (steam or CO_2) into the pokehole during poking operations. Abnormal process operation (start-up, shutdown, upsets) may require directing the raw product gas to a flare or incinerator. Further chemical characterization around the flare or incinerator is needed along with bioassay tests of the resulting combustion products.
By-Product Tar	1×10^6	2×10^7	Fused aromatic hydrocarbons and their derivatives, phenols, amines, benzene and substituted benzene hydrocarbons, heterocyclic nitrogen and sulfur compounds, halogenated aliphatic hydrocarbons, carboxylic acids and their derivatives, Cu, Pb, Sb, aliphatic hydrocarbons, Cr, Cd	Ba	Heterocyclic oxygen compounds, Hg, V, Mg, As	The by-product tar was the most potentially toxic material found in this test. Potential fugitive effluents of tar may occur around pumps, flanges, and valves. These effluents must be contained. Good maintenance and material handling procedures are required.
Separator Liquor	3×10^5	2×10^5	Phenols, fused aromatic hydrocarbons and their derivatives, NH_3, CN^-, heterocyclic nitrogen compounds, P, carboxylic acids and their derivatives	Thiols, Se, glycols, and epoxides, As	Heterocyclic sulfur compounds, F, Cl, Ca, Fe, Cd	The bioassay tests for the separator liquor indicated a low potential for hazardous health effects, and a high potential for hazardous ecological effects. Fugitive effluents of the separator liquor may occur around pumps, valves, flanges, and surge tanks. These fugitive effluents should be contained. Any accumulation should be sealed in containers for disposal. Proper maintenance and handling practices should be implemented. Further chemical characterization of the separator liquor is recommended because of the inconsistency between the health MATE values and the health bioassay tests.

the tar particulates. The volatile organics had a higher proportion of polycyclic aromatic hydrocarbons (PAH's) while the tar contained a higher proportion of heterocyclic aromatics. The tar particulates in the coal feeder vent had organic characteristics which were different from those of the separator tar, with the coal feeder vent tar having higher concentrations of PAH's heterocyclic nitrogen compounds and phenols.

This stream should be controlled in new gasification facilities. Further characterization should be directed toward the control technique for this stream, *e.g.*, if this stream is to be controlled by combustion (flaring, incineration, etc.), then detailed chemical characterization around the combustion process would be necessary, along with bioassay tests of the combustion products.

Separator Vent Gas -

The separator vent gas contained volatile organics and inorganics at potentially hazardous concentrations (greater than their MATE values). Volatile organics consisted primarily of PAH's and phenols. The inorganics consisted of gaseous inorganic compounds and a variety of trace elements.

This stream should be controlled in new gasification facilities. Further characterization should be directed toward the control technique for this stream, *e.g.*, if the control device for this stream is combustion, then detailed chemical characterization around the combustor will be necessary, along with bioassay tests of the resulting combustion products.

6.1.2 Solid Waste Streams

Gasifier Ash -

Very low levels of organics were found in the gasifier ash ($\sim$20 μg/g). The major trace elements found were alkali and alkaline earth metals. Trace element concentrations were similar to those found in ash from coal-fired boilers.

Even though the amount of extractable organics was low (∿20 μg/g), certain organic constituents may exist at levels exceeding their respective MATE values. Therefore, further analysis of this extract is recommended. The analysis should be directed specifically toward identifying specific organic species (*e.g.*, benzo-a-pyrene).

Even though the gasifier ash contained high concentrations of trace elements, the results of the bioassay tests indicated that the ash had a low potential for hazardous health or ecological effects. Leaching tests are recommended along with bioassay tests on the resulting leachate.

Cyclone Dust -

Very low levels of organics were found in the cyclone dust (∿40 μg/g). The dust was similar to devolatilized coal, as indicated by its carbon, oxygen and hydrogen content. A wide variety of trace elements were found, but generally at much lower concentrations than those found in the gasifier ash. The major trace elements found were K, Si, P and Fe.

As for the ash, further organic analysis is recommended for specific hazardous organic species in the extractable organics in the cyclone dust.

Because of the high carbon content, the cyclone dust should be combusted or recycled to the gasifier. If the dust is to be landfilled, leaching tests and bioassay tests on the resulting leachate are recommended.

6.1.3 Potential Fugitive Emissions

Raw Product Gas -

The gasifier and hot cyclone pokeholes are potential sources of fugitive emissions of raw product gas. Raw product gas contains tar, particulates and volatile organics and inorganics at potentially hazardous concentrations.

Because of the potentially hazardous nature of the raw product gas, control of pokehole emissions is needed. This can be achieved by injecting an inert gas (steam or CO_2) into the pokehole during poking operations. Abnormal process operation (startup, shutdown, upsets) may require directing the raw product gas to a flare or incinerator. Further chemical characterization around the flare or incinerator is needed along with bioassay tests of the resulting combustion products.

6.1.4 Potential Fugitive Effluents

Separator Liquor (Liquid) -

The tar/liquor separator is a potential source of fugitive effluent of separator liquor. The separator liquor contains high levels of organics, primarily thiols, phenols and heterocyclic aromatics. High levels of cyanide, ammonia, fluoride and sulfate were also found. Sulfide was not found at high concentrations, which may indicate oxidation of the sulfide to sulfate or escape as H_2S in the vent gases. Higher concentrations of trace elements were found in the separator liquor than were found in the by-product tar.

Degree of hazard values for the separator liquor indicated a moderate potential for hazardous health and ecological effects. The bioassay tests indicated a low potential for hazardous health effects, and a high potential for hazardous ecological effects. Fugitive effluents of the separator liquor may occur around pumps, valves, flanges, and surge tanks. These fugitive effluents should be contained. Any accumulation should be sealed in containers for disposal. Proper maintenance and handling practices should be implemented.

Further chemical characterization of the separator liquor is recommended because the health MATE values indicated a high potential effects while the bioassay tests indicated a low potential.

By-Product Tar (Solid) -

The tar/liquor separator is also a potential source of fugitive effluents of by-product tar. The by-product tar was the most potentially hazardous material tested, and was found to contain a wide range of organics and inorganics. The main organic

constituents were PAH's and heterocyclic nitrogen, oxygen and sulfur compounds. Fewer trace elements were found in the by-product tar than were found in the other liquid and solid streams tested. However, some trace element concentrations exceeded their respective MATE values.

Potential fugitive effluents of tar may occur around pumps, flanges, and valves. These effluents should be contained. Good maintenance and material handling procedures are necessary.

6.2 LEVEL 1 METHODOLOGY

An evaluation of Level 1 methodology for sampling and analysis of waste and process streams at the Chapman facility revealed a number of deficiencies. With modification, Level 1 methodology was found to be adequate for a screening characterization of low-Btu gasification facilities. Conclusions and recommendations regarding Level 1 methodology for sampling and analysis are presented in the following sections.

6.2.1 Sampling Methodology

An overall summary of conclusions and recommendations resulting from the evaluation of Level 1 sampling methodology is presented in Table 6-4. The bases for this summary are given in the following paragraphs.

Gas Sampling

Grab Sampling - In general, Level 1 methodology for grab sampling of gas streams required certain modifications to suit the conditions encountered during this STE program. The modifications included: (1) preconditioning of sample containers, and (2) pretreatment of samples to remove interfering components such as particulates, tar, oil and water.

Two modifications to Level 1 methodology were used for collecting grab samples from gaseous streams. These are as follows:

Table 6-4. CONCLUSIONS FROM EVALUATION OF LEVEL 1 SAMPLING METHODOLOGY DURING THE TEST PROGRAM AT A CHAPMAN FACILITY

Sampling Methodology	Remarks and Conclusions
Gas Sampling	
• Grab sampling	Level 1 methodology for collecting grab samples of gas streams required certain modifications to suit the conditions encountered during this STE program. The modifications included: (1) preconditioning sample containers and (2) pretreatment of samples to eliminate interfering species such as tars and condensables. A pretreatment train was necessary for removal of particulates, tar, oil, and water from certain gas samples since these impurities would interfere with the analysis for gaseous species. Problems were encountered in the use of a filter to remove tar and particulates. It was concluded that the tar/particulate layer on the filter sorbed significant amounts of sulfur species.
• SASS train sampling	The source assessment sampling system (SASS) must be modified when sampling gaseous streams containing high levels of tar, oil and/or water vapor. When sampling the coal feeder vent, the filter in the particulate collection module frequently became plugged with tar. To alleviate this, the temperature in the particulate module was reduced in order to collect a majority of the tar as particulates in the cyclones, instead of as a highly viscous fluid on the cyclone filter. When sampling streams that have a high moisture content, such as the separator vent, additional cooling was required in the SASS train organic module. This modification has been made in the new SASS train operating instructions. In most cases, sampling gaseous waste streams that contain high concentrations of tars, oils and/or moisture will involve either modifying the SASS train or using an alternate method. For example, in-line filters and/or electrostatic precipitators may be used to collect tars and oils.
Liquid and Solid Sampling	The Level 1 procedures for sampling liquid waste streams and potential fugitive effluents were adequate and generally straightforward.

(1) Glass sampling containers for collecting gas samples for sulfur species (H_2S, COS, CS_2, SO_2) analysis should be sylilated to assure that these species will not react with and/or be sorbed on the walls of the container.

(2) A pretreatment train is recommended for removal of particulates, tars, oils and water from the gas sample. Otherwise, these constituents will interfere with subsequent analyses.

SASS Train Sampling - Problems were encountered with the SASS train when sampling streams containing high levels of particulates, tar, oil, and water vapor. When sampling the coal feeder vent, the filter in the particulate collection module frequently became plugged with tar. To alleviate this, the temperature in the particulate module was reduced in order to collect a majority of the tar as particulates in the cyclones, instead of as a highly viscous fluid on the cyclone filter. When sampling streams that have a high moisture content, such as the separator vent, additional cooling was required in the SASS train organic module. This has been corrected in the new SASS train operating instructions.

An alternative system is recommended for collecting samples from tar/oil laden streams. This alternative system should include means for collection of tars and oils with an electrostatic precipitator.

Relocation of the XAD-2 cartridge to a point downstream of the condenser in the SASS train module was used. Using this modification, condensable organics are collected in the condenser, while organic vapors are sorbed on the XAD-2 resin. This modification will also minimize overloading the XAD-2 resin with organics that have already condensed and the potential for gas channeling through the resin.

Liquid and Solid Sampling -

Level 1 methodology for sampling liquid and solid waste and process streams was adequate, and generally straightforward.

6.2.2 Analytical Methodology

Level 1 methods gave satisfactory results in the following areas: liquid chromatographic separation, low resolution mass spectrometry and sparks source mass spectrometry. Problems were encountered using chemiluminescence for NO and NO_x determinations and using the test kits for hardness, nitrate and nitrite analyses. On site experiments indicated that reducing gas constituents in the gaseous samples to be analyzed for NO and NO_x caused problems in the chemiluminescense technique. EPA Method 7 procedure for NO_x determinations is recommended for analyzing gaseous streams containing reducing gas constituents. The problems encountered using the test kits were probably due to the high levels of organics in the separator liquor sample.

Alternate methods used to analyze gaseous species were used because of the need to obtain quantitative data for input to control technology development (i.e. gaseous sulfur species), the Level 1 detection limits were too high (i.e. NH_3 and HCN) or a comparible technique was easier to use. Sulfur species were analyzed using a column to obtain quantitative data on H_2S, COS, CS_2 and SO_2 in the gaseous streams sampled. Impinger techniques were used for NH_3 and HCN determinations. For fixed gases, a Fisher Gas Partitioner was used to separate N_2 and O_2 and permit quantification of the other species on a single sample injection.

During the analysis of trace elements, the Parr bomb solution contained high concentrations of Ca, K and P. These needed to be factored into the evaluation of the SSMS data.

During analyses for organic species, the extraction techniques specified by Level 1 methodology were found to be inadequate. Mass recoveries were generally lower than desired and certain highly polar organics were not extracted by Level 1 techniques. Extraction with methylene chloride at two pH's may solve this potential problem. Problems were encountered with Level 1 methods for total chromatographable organics, especially with heavy organic loading. In those cases, the resulting chromatograms were too complex for reliable application of the specified integration technique. Gravimetric determinations presented some of the more significant problems. Specifically, problems in weighing small samples that had a very low concentration of organics arose when only a small quantity of sample .

was contained on the watch glass. A scum formed on the surface of certain samples which could have prevented or hampered evaporation of volatile organics.

Specific conclusions drawn from the evaluation of Level 1 analytical methodology are presented in Table 6-5. Recommendations for modifications to the methodology are given in the following paragraphs.

Specific Methods

Nitrogen oxides (NO_x) - An alternate method such as EPA Method 7, is recommended for determining NO_x.

Ammonia and hydrogen cyanide - The gas chromatography technique specified by Level 1 was not sufficiently sensitive for determination of the low levels of NH_3 or HCN in the gas samples. NH_3 and HCN samples should be collected in impingers and analyzed by wet chemical methods.

Sulfur species - A modified gas chromatography technique using a Poropak QS column was used for analysis of sulfur species (H_2S, COS, CS_2, and SO_2) and was found to give the required separation for inputs to control technology development. However, problems were found with the Poropak QS packing because of its reactivity toward SO_2. Additional packed columns for separation of H_2S, COS, SO_2, and CS_2 have been evaluated. The following have proved satisfactory for gas samples obtained from coal gasification facilities:

(1) 3% TCEP, 0.5% H_3PO_4 on mesh Carbopak B.

(2) 1% Carbowax 20 M, 0.5% H_3PO_4 on mesh Carbopak B.

Fixed gases - A Fisher Gas Partitioner is recommended to permit separation of nitrogen and oxygen and quantification of other species on a single sample injection.

Test kits - The test kits specified by Level 1 were found to give adequate results in most cases. However, results could not be obtained using these kits for the determination of

Table 6-5. CONCLUSIONS FROM EVALUATION OF LEVEL 1 ANALYTICAL METHODOLOGY DURING THE TEST PROGRAM AT THE CHAPMAN FACILITY

Analysis Methodology	Remarks and Conclusions
Gaseous Species	
• Nitrogen Oxides	Analysis of NO by chemiluminescence in all of the gas stream samples was found to be adequate; however, the technique did not work for analyzing NO_x. This was probably caused by the presence of reducing gases in the sample. EPA Method 7 is recommended for NO_x analysis.
• NH_3 and HCN	The gas chromatography technique specified by Level 1 was not sensitive enough for determination of NH_3 or HCN in the gas samples. NH_3 and HCN samples were collected in impingers and analyzed by wet chemical methods.
• Sulfur Species (H_2S, COS, CS_2, SO_2)	The gas chromatography technique used to analyze sulfur species (H_2S, COS, CS_2, and SO_2) was used in order to give better separation than the Level 1 procedure.
• Fixed Gases (CO, H_2, CO_2, O_2, N_2, CH_4)	The Level 1 procedure for fixed gases analysis was modified. A Fisher Gas Partitioner was used so that nitrogen and oxygen could be separated and the other species quantified on a single sample injection.
Inorganics	
• Test kits for aqueous phase analysis	The test kits specified by Level 1 were found to give adequate results in most cases. However, results could not be obtained when using these kits for the determination of nitrate, nitrite, or hardness, probably because of the high organic content in the separator liquor.
• Trace Elements	The Parr bomb solution contained high concentrations of Ca, K, and P and needed to be factored into the SSMS data evaluation.
Organics	
• Extraction Techniques	The extraction techniques specified by Level 1 were found to be inadequate for extracting aqueous samples and XAD-2 resins containing highly polar organic compounds. Total mass recoveries using the Level 1 procedure were less than 50% for aqueous samples and approximately 70% for XAD-2 resins.
• Total Chromatographable Organics (TCO)	Problems arose when using the procedure for determining TCO's for most of the organic extracts. This was especially true when high amounts of organics were present because the resulting chromatograms were so complex that the integration techniques could not be used reliably.
• Gravimetric	Problems were encountered with inaccuracy when weighing small quantities of organics obtained from liquid chromatography fraction. Also, it appeared possible that volatile organics might be trapped within a sample during evaporation. A scum formed on the surface of certain samples which could prevent or significantly hamper the evaporation of volatile organics. Such problems could result in inconsistency in mass balances calculated from these data.
• Liquid Chromatography (LC)	The liquid chromatography method specified by Level 1 was capable of handling a loading of up to 400 mg. Even though there was significant overlap of compounds in different LC fractions, the LC procedure was adequate for obtaining results specified by Level 1.
• Infrared (IR) and Low Resolution Mass Spectrometry (LRMS)	The amount of information obtained from the IR spectra was of minimal value for compound class identification because of the complex nature of the samples. Most of the identifications were made from the results of the LRMS analyses of the LC fractions. Compound identification using LRMS was also difficult because of the complex nature of the sample, and may not be valid.

nitrate, nitrite or hardness. This was probably due to the high concentration of organics in the separator liquor.

Extraction techniques - The extraction techniques specified by Level 1 were found to be inadequate for extracting aqueous samples and XAD-2 resins containing highly polar organic compounds. Alternate extraction procedures using methylene chloride, ether and acidified ether, can be used in order to assure recovery of highly polar organics.

Total chromatographable organics (TCO) - Problems arose in using the procedure for determining TCO's for most of the organic extracts. This was especially true when high amounts of organics were present. The resulting chromatograms were so complex that the integration techniques were unreliable.

Gravimetric analysis - Significant variations were observed in mass determinations when dilute and concentrated samples of an extract were analyzed gravimetrically. It is recommended that additional work be performed in order to determine the optimum mass range for such analyses.

REFERENCES

1. Hamersma, J. W., S. L. Reynolds and R. F. Maddalone, IERL-RTP Procedures Manual: Level 1 Environmental Assessment. EPA-600/2-76-160a, EPA Contract No. 68-02-1412. TRW Systems Group, Redondo Beach, CA, June, 1976.

2. Cleland, J. G., and G. L. Kingsbury, Multimedia Environmental Goals for Environmental Assessment, Volumes I and II, Final Report. Report No. EPA-600-7-77-136a, b, EPA Contract No. 68-02-2612. RTI, Research Triangle Park, N.C., November, 1977.

3. American Public Health Assn., American Water Works Assn., and Water Pollution Control Federation, Standard Methods for the Examination of Water and Wastewater, 14th ed., Washington, D.C., 1975.

4. Schalit, L. M., and K. J. Wolfe, SAM/1A: A Rapid Screening Method for Environmental Assessment of Fossil Energy Process Effluents, Draft. EPA Contract No. 68-02-2160. Acurex Corporation/Energy and Environmental Division, Mountain View, CA, January, 1978.

APPENDIX

BIOASSAY, INFRARED SPECTROPHOTOMETRY, LIQUID CHROMATOGRAPHY AND LOW RESOLUTION MASS SPECTROMETRY DATA FOR A CHAPMAN GASIFICATION FACILITY

	Page
Introduction	171
Coal Feeder Vent, Combined Particulate Train CH_2Cl_2 Wash	177
Coal Feeder Vent, Combined Organic Module Extracts	189
Separator Vent, Combined Particulate Train CH_2Cl_2 Wash	201
Separator Vent, Combined Organic Module Extracts	213
Separator Liquor, CH_2Cl_2 Extract	225
By-Product Tar, CH_2Cl_2 Extract	237

APPENDIX

INTRODUCTION

The Level 1 bioassay and organic analyses methodology given in the IERL-RTP "Procedures Manual: Level 1 Environmental Assessment" was followed for the samples taken at the coal gasification test site. The samples analyzed are from the following four locations.

- Coal Feeder Vent - The coal is fed to the gasifier by a barrel valve. Since product gas from the gasifier can leak past this barrel valve into the coal feed chute, the chute is vented to the atmosphere. The particulate catch and rinses were analyzed separately from the XAD resin catch and organic condensate from this location.

- Separator Vent - Vapors above the liquor in the separator are exhausted to the atmosphere using a steam ejector. The sample taken from this location was divided into a particulate catch and rinses and an XAD resin catch and organic condensate and analyzed separately.

- Separator Liquor - The hot product gas is cooled and scrubbed with recirculated separator liquor. A sample of this liquor was extracted and analyzed.

- By-Product Tar - A sample of the tar layer from the liquor separator was extracted and analyzed.

A diagram of the coal gasification test site with these sample points indicated is given in Figure A-1.

The results of the bioassay tests are summarized in Table A-1. From these results, the coal feeder vent, separator vent, and by-product tar may have a high potential for hazardous health effects, while the gasifier ash, cyclone dust and separator liquor may have a low potential. All the streams except the gasifier ash may have a high potential for hazardous ecological effects.

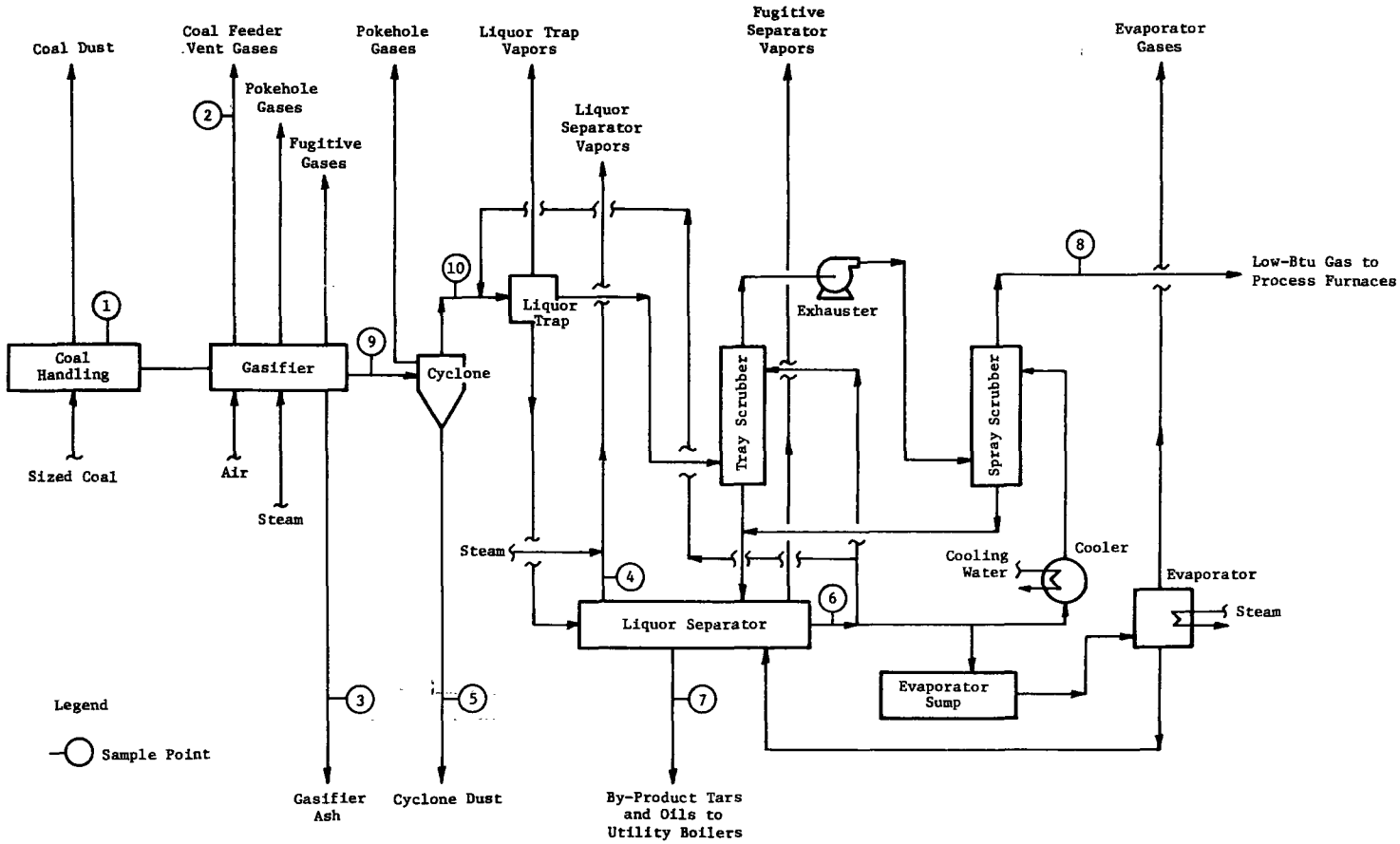

Figure A-1. SIMPLIFIED PROCESS FLOW DIAGRAM FOR THE CHAPMAN FACILITY SHOWING WASTE AND PROCESS STREAMS AND SAMPLING POINTS

Table A-1. BIOASSAY TEST RESULTS FOR THE CHAPMAN COAL GASIFICATION FACILITY

	Coal Feed (s)	Coal Feeder Vent Gas* (g)	Coal Feeder Vent Gas XAD-2 Extract*(g)	Gasifier Ash*(s)	Cyclone Dust*(s)	By-Product Tar(s)	Separator Vent Gas XAD-2 Extract*(g)	Separator Liquor (l)
HEALTH TESTS								
1. Ames	SP	-	P	N	N	P	SP	N
2. Cytotoxicity[a]								
WI-38, EC_{50} (cell count, μg solid, m^3 gas/mℓ culture)	>60	-	4×10^{-4}	-	-	-	7×10^{-6}	-
RAM, EC_{50} (cell count, μg solid & liquid, m^3 gas/mℓ culture)	>1000	-	$>2 \times 10^{-9}$	>300	>1000	>1000	$>1 \times 10^{-5}$	>600
3. Rodent Acute Toxicity	M	-	-	L	M	H	-	L
LD_{50} (g sample/kg rat)	>10	-	-	>10	>10	>10	-	>10
ECOLOGICAL TESTS								
Fresh Water[b]								
Algal, EC_{50} (15 days)	-	-	-	-	-	-	-	1.0 to 0.1%
Daphnia, LC_{50} (48 hours)	-	-	-	-	-	-	-	0.11%
Fathead minnow, LC_{50} (96 hours)	-	-	-	-	-	-	-	0.02%
Salt Water[b]								
Algal, EC_{50} (12 days) filter/unfiltered	-	-	-	-	-	-	-	0.53/0.41%
Shrimp, LC_{50} (96 hours)	-	-	-	-	-	-	-	0.25%
Sheepshead minnows, LC_{50} (96 hours)	-	-	-	-	-	-	-	0.16%
Terrestrial								
Soil microcosm[c]	3	-	-	4	1	2	-	5
Plant stress ethylene	-	N	-	-	-	-	-	-

*Indicates a plant waste stream
SP: Slightly positive
P: Positive
N: Negative

(g): gas, (s): solid, (l): liquid

H: High toxicity
M: Medium toxicity (*i.e.*, rats showed hair loss, eye discoloration, etc.)
L: Low toxicity (*i.e.*, no significant effects noted)

[a] EC_{50}'s were calculated on the XAD-2 extract for the coal feeder and separator vent gases by:

$$EC_{50} = \begin{bmatrix} EC_{50} \text{ reported} \\ \text{in } \mu\ell \text{ of extract} \\ \text{per m}\ell \text{ culture} \end{bmatrix} \times \begin{bmatrix} \text{mg of organics} \\ \text{extracted per m}\ell \\ \text{of extract} \end{bmatrix} \times \begin{bmatrix} \text{mg of organics} \\ \text{per Nm}^3 \text{ of} \\ \text{vent gas} \end{bmatrix} = \text{Nm}^3 \text{ vent gas/m}\ell \text{ culture}$$

[b] EC_{50}'s and LC_{50}'s for fresh and salt water tests are presented in wt% of the sample in water.

[c] Soil microcosm tests are ranked from No. 1, the most toxic, to No. 5, the least toxic.

The Level 1 organic analysis scheme that was used is shown in Figure A-2. The results of infrared, liquid chromatography fractionation and low resolution mass spectrometry are presented in the following tables.

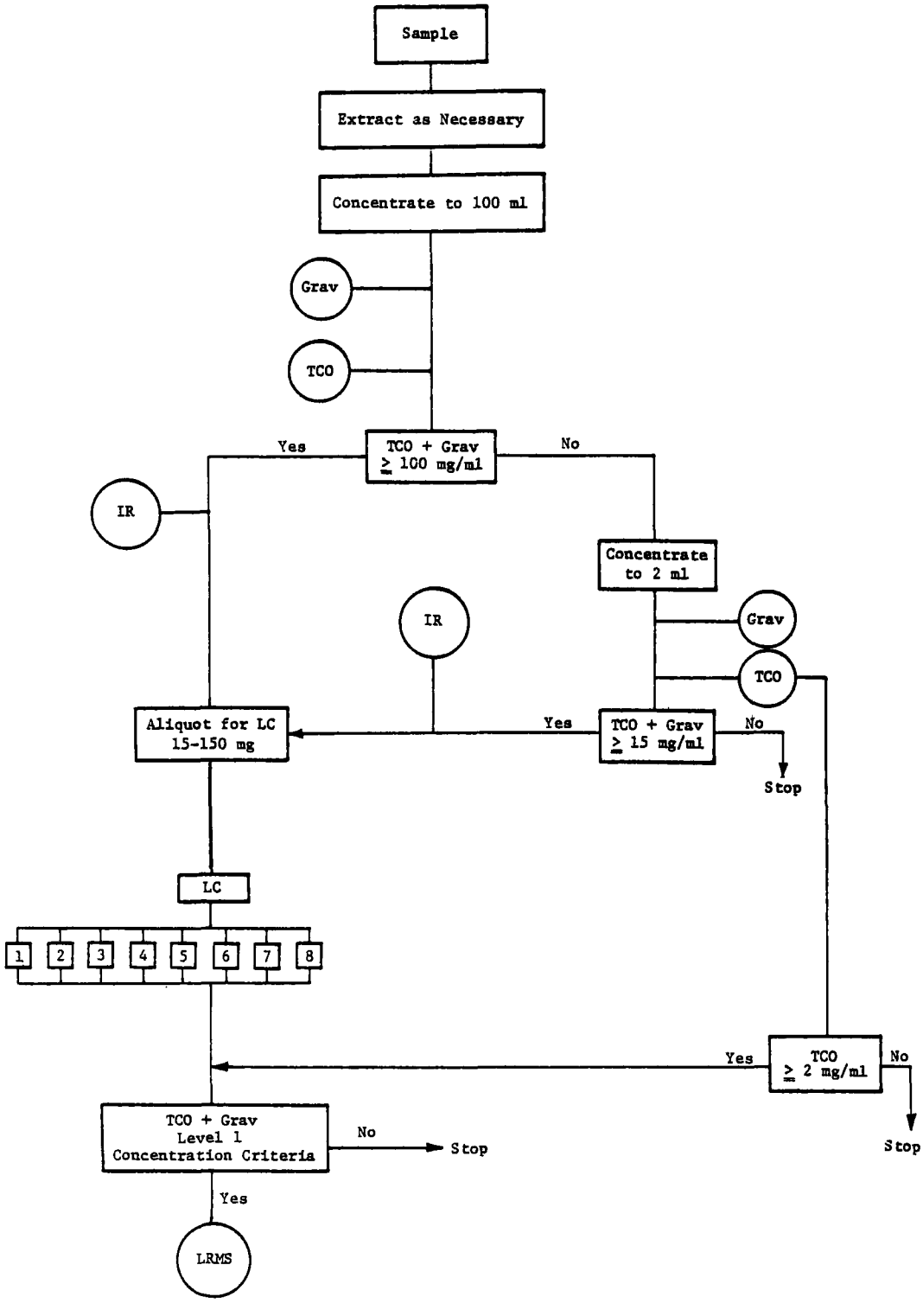

Figure A-2. LEVEL 1 ANALYTICAL SCHEME

COAL FEEDER VENT

COMBINED PARTICULATE TRAIN CH_2Cl_2 WASHES

COAL FEEDER VENT
COMBINED PARTICULATE TRAIN CH_2Cl_2 WASHES

INFRARED ANALYSIS

TCO = 1200 mg

Grav = 36000 mg

Total = 1600 mg/m^3

IR:

Major Peaks, cm^{-1}	Intensity	Assignment
3650-2300	M	-NH, -OH
3050	S	Aromatic CH
2900-2840	S	Aliphatic CH
1710-1690	M	Carbonyls
1600	S	Aromatic ring, amines
1440-1450	S	Aliphatics
1375	S	Aliphatics
1360	S	Aliphatics, heterocyclic O
1330-1100	S	Heterocyclic O
1030	S	Esters
950	M	Alkenes
880, 840, 810, 740	S	Aromatic substitution
700	M	Aromatic substitution
610	M	Alkenes

Comments: Strongly aromatic, heterocyclic N and heterocyclic O probably present.

LC FRACTIONATION RESULTS

Quantity taken for LC: 6.97 mg TCO, 201 mg Grav, 0.56% Total sample

Fraction	TCO mg	Grav mg	Total mg	Total mg/m^3
LC 1	14	2700	2700	110
LC 2	5.4	900	900	37
LC 3	620	13000	14000	580
LC 4	47	7600	7600	310
LC 5	92	3200	3300	140
LC 6	1600	16000	18000	740
LC 7	130	3800	3900	160
LC 8	45	2000	2000	83

COAL FEEDER VENT
COMBINED PARTICULATE TRAIN CH_2Cl_2 WASHES
LC 1

INFRARED ANALYSIS

TCO = 14 mg

Grav = 2700 mg

Total = 110 mg/m^3

IR:

Major Peaks, cm^{-1}	Intensity	Assignment
3600-3150	M	-OH, water
3040	W	Aromatic CH
2960-2820	S	Aliphatic CH
1680-1600	S	Alkenes, water
1440	W	Alkanes
1400	M	Alkenes
1350	W	Alkanes
1090-1050	S	Aliphatic ethers, alcohols
1010	S	Alcohols
720	S	Halogens

Comments: Mostly aliphatics and olefinics. Region from 1100-1000 cm^{-1} may be stopcock grease.

LRMS REPORT

Categories, present

Intensity

100 Aliphatic Hydrocarbons

Subcategories, specific compound

Intensity

100 Aliphatic Hydrocarbons

a. Alkanes, cycloalkanes

b. Alkenes

COAL FEEDER VENT
COMBINED PARTICULATE TRAIN CH_2Cl_2 WASHES
LC 2

INFRARED ANALYSIS

TCO = 5.4 mg

Grav = 900 mg

Total = 37 mg/m^3

IR:

Major Peaks, cm^{-1}	Intensity	Assignment
3550-3100	M	-OH, water
2990-2820	S	Aliphatic CH
1650	M	Water
1450-1410	M	Silicone grease
1370	M	Aliphatics
1150	M	Aliphatics
1100-1000	S	Silicone grease, R-O

Comments: No aromatic CH, no benzene substitution patterns. LR/MS indicates phthalates and esters which cannot be confirmed. Silicone grease is present.

LRMS REPORT

Categories, present

Intensity	
100	Aliphatic Hydrocarbons
10	Carboxylic Acids and Their Derivatives

Subcategories, specific compounds

Intensity	
100	Aliphatic Hydrocarbons
	a. Alkanes
	b. Alkenes, cycloalkanes
10	Carboxylic Acids and Their Derivatives
	a. Phthalates

COAL FEEDER VENT
COMBINED PARTICULATE TRAIN CH_2Cl_2 WASHES
LC 3

INFRARED ANALYSIS

TCO = 620 mg

Grav = 13000 mg

Total = 580 mg/m^3

IR:

Major Peaks, cm^{-1}	Intensity	Assignment
3045	S	Aromatic CH
2990-2840	S	Aliphatic CH
1900	M	Aromatic overtones
1725-1650	M	Carbonyls
1440	S	Aliphatics
1395, 1375	S	Aliphatics
1310, 1300	S	Esters
1260, 1240	S	Esters, aromatic ethers
1185	S	Aliphatic ethers
1160-1100	M	Aliphatic ethers
175, 1030	M	Aromatic ethers, alkanes
945	M	Aliphatics
875, 840, 750, 710	S	Aromatic substitution
615	W	Halogens

Comments: Contains much aromatic material, possibly aldehydes, some ethers, and a lot of PAH's. LR/MS does not confirm the carbonyls or ethers.

LRMS REPORT

Categories, present

Intensity	
100	Polycyclic Aromatic Hydrocarbons

Subcategories, specific compounds

Intensity	
100	Polycyclic Aromatic Hydrocarbons

a. Napthalene, alkyl series
MW 128-156

b. Acenaphthylene
MW 152

c. Phenanthrene/anthracene
MW 178

d. Pyrene/fluoranthene
MW 202

e. Chrysene
MW 228

f. Benzopyrene, alkyl series
MW 252, 276, 302, 326, 352

COAL FEEDER VENT
COMBINED PARTICULATE TRAIN CH_2Cl_2 WASHES
LC 4

INFRARED ANALYSIS

TCO = 47 mg

Grav = 7600 mg

Total = 310 mg/m³

IR:

Major Peaks, cm^{-1}	Intensity	Assignment
3410	S	-NH
3350-3150	M	-NH, -OH
3045	S	Aromatic CH
2950-2800	S	Aliphatic CH
2300	W	Isocyanates
2210	W	Nitriles
1910	M	Aromatic overtones
1720-1680	S	Carbonyls
1460-1440	S	Aliphatics
1380	S	Aliphatics
1325	S	Aliphatics, amides
1265	S	Heterocyclic N
1240	S	Esters, aliphatics, aromatic ethers
1190, 1150	S	Phenols, esters, aliphatic ethers
1115, 1070, 1025	S	Amines, phenols, ethers, alcohols
950	S	Alkenes
875, 840, 810, 745, 700	S	Aromatic substitution

Comments: Much larger C-O, C-N regions from LC 3. PAH's still present. Heterocyclic N and -O probable, esters likely. LR/MS does not confirm carbonyl containing compounds.

LRMS REPORT

Categories, present

Intensity	
100	Polycyclic Aromatic Hydrocarbons
100	Heterocyclic Nitrogen Compounds
100	Polycyclic Aromatic Hydrocarbons
	a. Pyrene, alkyl series MW 202, 228, 252, 276, 302, 326, 352
100	Heterocyclic Nitrogen Compounds
	a. Carbazole, alkyl series MW 167
	b. Benzocarbazole, alkyl series MW 217
	c. Dibenzocarbazole, alkyl series MW 276
	d. Azapyrene, alkyl series MW 217

COAL FEEDER VENT
COMBINED PARTICULATE TRAIN CH_2Cl_2 WASHES
LC 5

INFRARED ANALYSIS

TCO = 92 mg

Grav = 3200 mg

Total = 140 mg/m^3

IR:

Major Peaks, cm^{-1}	Intensity	Assignment
3650-3100	S	-NH, -OH
3050	S	Aromatic CH
2990-2840	S	Aliphatic CH
2220	S	Nitriles
1710-1680	M	Carbonyls
1600	S	Aromatic ring
1450-1440	S	Aliphatics
1390, 1375	S	Aliphatics
1350-1100	S	Esters, heterocyclic O, heterocyclic N
1265	S	Aromatic-NH
1030	S	Aliphatic ethers, alcohols
950	M	Alkenes
880, 820, 800, 740, 700	S	Aromatic substitution

Comments: Aromatic substitution patterns stronger than LC 4, -NH and C-O less well defined. Nitriles definitely present, amines, and/or heterocyclic N. LR/MS still does not confirm carbonyl compounds.

LRMS REPORT

Categories, present

Intensity

100 Heterocyclic Nitrogen Compounds

Subcategories, specific compounds

Intensity

100 Heterocyclic Nitrogen Compounds

a. Naphthonitrile, alkyl series
MW 153, 167, 181, 195, 209

b. Azapyrene, alkyl series
MW 203, 217, 231

c. Azabenzofluoranthene
MW 227, 241, 255, 269

Other: Heterocyclic nitrogen compounds could contain some oxygen, for example, m/e 195, 209, 223.

COAL FEEDER VENT
COMBINED PARTICULATE TRAIN CH_2Cl_2 WASHES
LC 6

INFRARED ANALYSIS

TCO = 1600 mg

Grav = 16000 mg

Total = 740 mg/m³

IR:

Major Peaks, cm^{-1}	Intensity	Assignment
3650-2300	S	-OH, -NH, water
3050	S	Aromatic CH
2990-2840	S	Aliphatic CH
1900	W	Aromatic overtones
1710-1685	M	Carbonyls
1665-1590	S	Aromatic ring, polyhydroxy aromatics
1450	S	Aliphatics
1375	S	Aliphatics
1265	S	Heterocyclic N, CH_3Cl
1320-1100	S	Heterocyclic O, N
1035	M	Phenols
950	M	Alkenes
875, 810, 740, 700	S	Aromatic substitution

Comments: More acidic material than in LC 5. Phenols are present, heterocyclic O and heterocyclic N probable.

LRMS REPORT

Categories, present

Intensity	
100	Phenols
100	Heterocyclic Nitrogen Compounds

Subcategories, specific compounds

Intensity	
100	Phenols
	a. Phenol, alkyl series MW 94, 108, 122
	b. Naphthol, alkyl series MW 144, 158
	c. Fluorenol, alkyl series MW 182, 196
100	Heterocyclic Nitrogen Compounds
	a. Quinoline, alkyl series MW 129, 143
	b. Acridine, alkyl series MW 179, 193
	c. Azabenzopyrene, alkyl series MW 253, 267

Other: There are lots of compounds between m/e 300-400 that cannot be interpreted.

COAL FEEDER VENT
COMBINED PARTICULATE TRAIN CH_2Cl_2 WASHES
LC 7

INFRARED ANALYSIS

TCO = 130 mg

Grav = 3800 mg

Total = 160 mg/m^3

IR:

Major Peaks, cm^{-1}	Intensity	Assignment
3500-2300	S	-OH, -NH
3050	S	Aromatic CH
2900-2130	S	Aliphatic CH
1710-1685	M	Carbonyls
1650-1630	S	Aromatic ring, β-naphthols
1510-1500	S	Aromatic ring
1440	S	Aliphatics
1375	S	Aliphatics
1260	S	Heterocyclic N
1300-1100	S	Heterocyclic O, phenols
950	M	Alkenes
890-850, 780, 760, 730	M	Aromatic substitution

Comments: Heterocyclic O compounds probable, phenols and heterocyclic N possible. IR does not confirm sulfur compounds found by LR/MS.

LRMS REPORT

Categories, present

Intensity	
100	Heterocyclic Oxygen Compounds
100	Carboxylic Acids and Their Derivatives
10	Sulfonic Acids, Sulfoxides

Subcategories, specific compounds

Intensity	
100	Heterocyclic Oxygen Compounds
	a. Benzonaphthofuran MW 232, 246, 260
10	Carboxylic Acids and Their Derivatives
	a. Malonic acid MW 282
10	Sulfonic Acids, Sulfoxides
	a. Aromatic Sulfoxides MW 308

Other: IR shows no sulfur containing compounds.

COAL FEEDER VENT
COMBINED PARTICULATE TRAIN CH_2Cl_2 WASHES

LC 8

INFRARED ANALYSIS

TCO = 45 mg

Grav = 2000 mg

Total = 83 mg/m^3

IR:

Major Peaks, cm^{-1}	Intensity	Assignment

No IR bands for aliphatic or aromatic CH. Water is present.

LRMS REPORT

Categories, present

Intensity	
100	Carboxylic Acid and Their Derivatives
100	Carboxylic Acids and Their Derivatives
	a. Esters, methyl esters of long chain carboxylic acids

ORGANIC EXTRACT SUMMARY, COAL FEEDER VENT SAMPLE, COMBINED PARTICULATE TRAIN
CH_2Cl_2 WASH

	LC1	LC2	LC3	LC4	LC5	LC6	LC7	LC8
Total organics,								
mg/m^3	110	37	580	310	140	740	160	83
TCO, mg	14	5.4	620	47	92	1600	130	45
GRAV, mg	2700	900	13000	7600	3200	16000	3800	2000

Category	Int/mg/m^3							
Aliphatic Hydrocarbons	100/110	100/34						
Carboxylic Acids & Derivatives		10/3.4					10/13	100/83
Polycyclic Aromatic Hydrocarbons			100/580	100/155				
Heterocyclic N Compounds				100/155	100/140	100/370		
Phenols						100/370		
Heterocyclic O Compounds							100/130	
Sulfonic Acids and Sulfoxides							10/13	

Int: Intensity

COAL FEEDER VENT

COMBINED ORGANIC MODULE EXTRACTS

COAL FEEDER VENT
COMBINED ORGANIC MODULE EXTRACTS

INFRARED ANALYSIS

TCO = 7900

Grav = 11000 mg

Total = 780 mg/m³

IR:

Major Peaks, cm^{-1}	Intensity	Assignment
3540	M	-OH (free)
3506-3100	M	-NH, -OH (bonded)
3050, 3010	S	Aromatic CH
2980-2820	S	Aliphatic CH
1595	S	Aromatic ring
1510-1490	S	Aromatic ring
1450	S	Aliphatics
1420	S	Aliphatics
1385	S	Aliphatics
1290-1300	M	Phenolic C-O
1265	S	Heterocyclic N or O
1185	S	Ethers
1120-1100	M	Phenols, aromatics
1030-1000	M	Aliphatic ethers, alcohols
940	M	Alkenes
905, 870, 850, 825, 805	M	Aromatic substitution

Comments: Strongly aromatic sample, probably rich in N-heterocycles and phenols.

LC FRACTIONATION RESULTS

Quantity taken for LC: 310 mg TCO, 420 mg Grav; 3.94% Total sample

Fraction	TCO mg	Grav mg	Total mg	Total mg/m³
LC 1	370	130	500	21
LC 2	3600	2700	6300	260
LC 3	130	2100	2200	91
LC 4	99	380	480	20
LC 5	0.25	51	51	2.1
LC 6	870	1000	1900	79
LC 7	0.76	150	150	6.2
LC 8	28	430	460	19

COAL FEEDER VENT
COMBINED ORGANIC MODULE EXTRACTS
LC 1

INFRARED ANALYSIS

TCO = 370 mg

Grav = 130 mg

Total = 21 mg/m^3

IR:

Major Peaks, cm^{-1}	Intensity	Assignment
2980-2820	S	Aliphatic CH
1460	M	Aliphatics
1375	M	Aliphatics

Comments: Mostly straight chain aliphatics, not much evidence of extensive branching. IR does not show any aromatics found by LR/MS.

LRMS REPORT

Categories, present

Intensity	
100	Aliphatic Hydrocarbons
100	Aromatic Hydrocarbons
100	Polycyclic Aromatic Hydrocarbons

Subcategories, specific compounds

Intensity	
100	Aliphatic Hydrocarbons
	a. Alkanes
	b. Alkenes
	c. Cycloalkanes
100	Aromatic Hydrocarbons
	a. Benzene, alkyl series MW 78-148
100	Polycyclic Aromatic Hydrocarbons
	a. Naphthalenes, alkyl series MW 128-156

COAL FEEDER VENT
COMBINED ORGANIC MODULE EXTRACTS
LC 2

INFRARED ANALYSIS

TCO = 3600 mg

Grav = 2700 mg

Total = 260 mg/m³

IR:

Major Peaks, cm^{-1}	Intensity	Assignment
3050	S	Aromatic CH
3020	S	Aromatic CH
2970-2840	S	Aliphatic CH
1920	W	Aromatic overtones
1620	M	Aromatic ring
1590, 1505	S	Alkyl toluenes
1490, 1475, 1445, 1425	S	Aliphatics
1395	M	Aliphatics
1380	S	Aliphatics
1320-1300	M	Amines, esters
1265	M	Alkyl benzenes
1200-1185	S	Ethers, alcohols, esters
1160, 1145, 1125	M	Aromatic overtones, ethers
1080	M	Alkyl benzenes
985, 950	M	Alkenes
900, 840	S	Aromatic substitution
830, 810, 780, 770, 735, 725	S	Aromatic substitution
695	M	Aromatic substitution

Comments: Aromatic and aliphatic hydrocarbons, may contain R-O-R although not confirmed by LR/MS. Possible compounds: alkylated benzenes and similar aromatics, benzo-pyrene, pyrene, perylene, phenanthrene, anthracene.

LRMS REPORT

Categories, present

Intensity

100 Polycyclic Aromatic Hydrocarbons

Subcategories, specific compounds

Intensity

100 Polycyclic Aromatic Hydrocarbons

a. Naphthalene, alkyl series
MW 128-156

b. Acenaphthylene
MW 112-166

c. Acenaphthene
MW 154-168

d. Phenanthrene/anthracene
MW 178-192

Other: Fluorene, indene

COAL FEEDER VENT
COMBINED ORGANIC MODULE EXTRACTS
LC 3

INFRARED ANALYSIS

TCO = 130 mg

Grav = 2100 mg

Total = 91 mg/m^3

IR:

Major Peaks, cm^{-1}	Intensity	Assignment
3045	S	Aromatic CH
2060-2840	M	Aliphatic CH
1615	M	Aromatic or olefinic C=C
1590	M	Aromatic ring
1500-1470	M	Aromatic ring
1445	S	Aliphatics
1395, 1375	M	Aliphatics
1310, 1290	M	Aliphatics
1188	S	Ethers
950	M	Alkenes
875, 810, 735	S	Aromatic substitution
830, 690	M	Aromatic substitution

Weak Peaks: 1525

Comments: Very similar to LC 2, not as well resolved, aromatics stronger with respect to aliphatic CH.

LRMS REPORT

Categories, present

Intensity

100 Polycyclic Aromatic Hydrocarbons

Subcategories, specific compounds

Intensity

100 Polycyclic Aromatic Hydrocarbons

a. Acenaphthylene, alkyl series
MW 152-166

b. Phenanthrene/anthracene, alkyl series
MW 178-192

c. Pyrene/fluoranthene
MW 202-216

d. Benzopyrene
MW 252-266

e. Chrysene
MW 228-242

COAL FEEDER VENT
COMBINED ORGANIC MODULE EXTRACTS
LC 4

INFRARED ANALYSIS

TCO = 99 mg

Grav = 380 mg

Total = 20 mg/m³

IR:

Major Peaks, cm^{-1}	Intensity	Assignment
3510	W	-OH
3400	S	-NH
3400-3120	M	-NH, -OH
3040	M	Aromatic CH
2980-2825	M	Aliphatic CH
2200	W	Nitriles
1620-1580	M	Aromatic ring amines
1490-1480	M	Aromatic ring, amines
1445	S	Aromatics
1450-1400	M	Aliphatics
1370	S	Aliphatics
1325	S	Aromatic amines
1235, 1200	S	Ethers, alcohols
1020	M	Aliphatic C-O
840, 800	M	Aromatic substitution
750, 720	S	Aromatic substitution

Comments: Definite -NH, probably includes aromatic amines and N-heterocycles. Broad 1600 cm^{-1} region implies aliphatic amines.

LRMS REPORT

Categories, present

Intensity	
100	Heterocyclic Nitrogen Compounds
10	Thiols

Subcategories, specific compounds

Intensity	
100	Heterocyclic Nitrogen Compounds
	a. Carbazole, alkyl series MW 167-181
	b. Benzocarbazole, alkyl series MW 217-231
	c. Indole, alkyl series MW 117, 131, 145, 159
10	Thiols
	a. Aminothiophenol MW 153

COAL FEEDER VENT
COMBINED ORGANIC MODULE EXTRACTS
LC 5

INFRARED ANALYSIS

TCO = 0.25 mg

Grav = 51 mg

Total = 2.1 mg/m³

IR:

Major Peaks, cm^{-1}	Intensity	Assignment
3600-3100	S	-OH, -NH
3100-3000	M	Aromatic CH
2980-2800	S	Aliphatic CH
2120	M	Nitriles
1650	S	Water
1600-1570	S	Aromatic ring
1470-1410	S	Aliphatics
1375	S	Aliphatics
1310-1130	S	Heterocyclic O or -N
1265	S	Sulfates
1200	S	Heterocyclic O or -N
1010	S	Aromatic ethers
880, 830-800, 770, 745	M	Aromatic substitution
690	W	Aromatic substitution

Comments: Phenols probably present, aromatic oxygen and nitrogen compounds possible. Also sulfur containing compounds. LR/MS does not confirm oxygenated compounds.

LRMS REPORT

Categories, present

Intensity	
100	Heterocyclic Sulfur Compounds
100	Heterocyclic Nitrogen Compounds
10	Nitriles

Subcategories, specific compounds

Intensity	
100	Heterocyclic Sulfur Compounds
	a. Dibenzothiophene, alkyl series MW 184, 198, 212
100	Heterocyclic Nitrogen Compounds
	a. Acridine MW 179
	b. Benzo(d,e,f)carbazole MW 191
10	Nitriles
	a. Naphthonitrile, alkyl series MW 153, 167, 181

COAL FEEDER VENT
COMBINED ORGANIC MODULE EXTRACT
LC 6

INFRARED ANALYSIS

TCO = 870 mg

Grav = 1000 mg

Total = 79 mg/m³

IR:

Major Peaks, cm^{-1}	Intensity	Assignment
3600-3250	S	-OH
3050	S	Aromatic CH
2950-2820	S	Aliphatic CH
1700-1680	M	Carbonyls
1610-1590	S	Aromatic ring, amines
1550	M	Aromatic ring
1510-1500	S	Phenols
1460-1450	S	Aliphatics
1380	S	Aliphatics
1265	S	Carboxylic acids
1230-1210	S	Phenols
1150, 1110	M	Phenols, esters
860, 835, 810, 700	M	Aromatic substitution
735	S	Aromatic substitution

Comments: Mainly phenols, cresols, carboxylic acids, possibly some heterocyclic N.

LRMS REPORT

Categories, present

Intensity	
100	Phenols
10	Heterocyclic Nitrogen Compounds

Subcategories, specific compounds

Intensity	
100	Phenols
	a. Phenol, alkyl series MW 94, 148
	b. Benzene, dihydric, polyhydric MW 110-126
	c. Naphthols, alkyl series MW 144, 158, 172
10	Heterocyclic Nitrogen Compounds
	a. Acridine MW 179
	b. Benzoquinoline, alkyl series MW 179, 192-207

COAL FEEDER VENT
COMBINED ORGANIC MODULE EXTRACTS

LC 7

INFRARED ANALYSIS

TCO = 0.76 mg

Grav = 150 mg

Total = 6.2 mg/m^3

IR:

Major Peaks, cm^{-1}	Intensity	Assignment
3600-2400	S	-OH, -NH
3050	M	Aromatic CH
2980-2820	S	Aliphatic CH
1710-1670	S	Carbonyls
1650-1560	S	Aromatic and olefinic C=C
1500	M	Aromatic ring
1455-1410	S	Aliphatics
1400-1375	S	Aliphatics
1340-900	S	C-O and C-N
840, 750	M	Aromatic substitution

Comments: More aliphatic CH than aromatic, amines and heterocyclic N and -O possible.

LRMS REPORT

Categories, present

Intensity	
100	Amines
	a. Aniline, alkyl series MW 79-135, 149
	b. Naphthalene amine, alkyl series MW 143-157, 171
	c. Benzidine MW 184
10	Heterocyclic Nitrogen Compounds
	a. Quinoline, alkyl series MW 129-157
	b. Carbazole, alkyl series MW 179-193, 207

COAL FEEDER VENT
COMBINED ORGANIC MODULE EXTRACTS
LC 8

INFRARED ANALYSIS

TCO = 28 mg

Grav = 430 mg

Total = 19 mg/m^3

IR:

Major Peaks, cm^{-1}	Intensity	Assignment
No IR bands.		

LRMS REPORT

Categories, present

Intensity

Trace — Carboxylic Acids and Their Derivatives

Subcategories, specific compounds

Intensity

Trace — Carboxylic Acids and Their Derivatives

a. Chloroacetic acid
MW 94

b. Methyl esters of long chain carboxylic acids

Other: m/e 73, 89, 112

ORGANIC EXTRACT SUMMARY, COAL FEEDER VENT SAMPLE, COMBINED ORGANIC MODULE EXTRACTS

	LC1	LC2	LC3	LC4	LC5	LC6	LC7	LC8
Total organics, mg/m^3	21	260	91	20	2.1	79	6.2	19
TCO, mg	370	3600	130	99	0.25	870	0.76	28
GRAV, mg	130	2700	2100	380	51	1000	150	430
Category Int/mg/m^3								
Aliphatic Hydrocarbons	100/7							
Aromatic Hydrocarbons	100/7							
Polycyclic Aromatic Hydrocarbons	100/7	100/260	100/91					
Heterocyclic N Compounds				100/18	100/1	10/7.2	10/0.56	
Heterocyclic S Compounds					100/1			
Thiols				10/1.8				
Nitriles					10/0.1			
Phenols						100/72		
Amines							100/5.6	

Int: Intensity

SEPARATOR VENT

COMBINED PARTICULATE TRAIN CH_2Cl_2 WASHES

SEPARATOR VENT
COMBINED PARTICULATE TRAIN CH_2Cl_2 WASHES

INFRARED ANALYSIS

TCO = 6.2 mg

Grav = 160 mg

Total = 11 mg/m^3

IR:

Major Peaks, cm^{-1}	Intensity	Assignment
3600-3100	M	-OH, -NH
3040	M	Aromatic CH
2980-2840	S	Aliphatic CH
1730-1680	W	Carbonyls
1650	S	Aromatic ring, amines
1590	S	Aromatic ring
1460-1400	S	Aliphatics
1370	S	Aliphatics
1300-1080	S	Heterocyclic O, heterocyclic N
1070, 1020	S	Aliphatic C-O
870, 810	M	Aromatic substitution
740	S	Aromatic substitution

Weak Peaks: 485, 460

Comments: Aromatic and aliphatic hydrocarbons, carboxylic acids, heterocyclic N, heterocyclic O and phenols are probable.

LC FRACTIONATION RESULTS

Quantity taken for LC: 2.3 mg TCO, 57.6 mg Grav. 36.4% Total sample

Fraction	TCO mg	Grav mg	Total mg	Total mg/m^3
LC 1	0.14	28	28	1.9
LC 2	0.03	11	11	0.74
LC 3	0.08	19	19	1.3
LC 4	0.06	19	19	1.3
LC 5	0.03	22	22	1.5
LC 6	-	47	47	3.2
LC 7	-	14	14	0.94
LC 8	0.03	22	22	1.5

SEPARATOR VENT
COMBINED PARTICULATE TRAIN CH_2Cl_2 WASHES
LC 1

INFRARED ANALYSIS

TCO = 0.14 mg

Grav = 28 mg

Total = 1.9 mg/m^3

IR:

Major Peaks, cm^{-1}	Intensity	Assignment

No IR bands with which to confirm LR/MS identification of aliphatic hydrocarbons.

LRMS REPORT

Categories, present

Intensity	
100	Aliphatic Hydrocarbons
1	Carboxylic Acids and Their Derivatives
1	Aromatic Hydrocarbons

Subcategories, specific compounds

Intensity	
100	Aliphatic Hydrocarbons
	a. Alkanes, alkyl series MW 86-268 composition: C_6H_{14}-$C_{29}H_{40}$
	b. Alkenes, alkyl series MW 84
1	Carboxylic Acids and Their Derivatives
	a. Esters, phthalates
1	Aromatic Hydrocarbons
	a. Benzenes, alkyl series

Other: 10 Sulfur, S_8, MW 256

SEPARATOR VENT
COMBINED PARTICULATE TRAIN CH_2Cl_2 WASHES
LC 2

INFRARED ANALYSIS

TCO = 0.03 mg

Grav = 11 mg

Total = 0.74 mg/m^3

IR:

Major Peaks, cm^{-1}	Intensity	Assignment

IR sample heavily contaminated with silicone grease.

LRMS REPORT

Categories, present

Intensity	
1	Aliphatic Hydrocarbons
1	Aromatic Hydrocarbons
1	Polycyclic Aromatic Hydrocarbons
1	Carboxylic Acids and Their Derivatives

Subcategories, specific compounds

Intensity	
1	Aliphatic Hydrocarbons
	a. Alkanes, alkyl series
1	Aromatic Hydrocarbons
	a. Benzene, alkyl series
1	Polycyclic Aromatic Hydrocarbons
	a. Napthalene, alkyl series MW 128-156
1	Carboxylic Acids and Their Derivatives
	a. Esters, phthalates

Other: 100 Silicones, cyclic polysiloxane, m/e 73, 135, 147, 197, 281

SEPARATOR VENT
COMBINED PARTICULATE TRAIN CH_2Cl_2 WASHES
LC 3

INFRARED ANALYSIS

TCO = 0.08 mg

Grav = 19 mg

Total = 1.3 mg/m³

IR:

Major Peaks, cm^{-1}	Intensity	Assignment
3040-3000	W	Aromatic CH
2950-2800	W	Aliphatic CH
1750-1650	S	Carbonyls
1600	S	Aromatic ring, alkenes
1440	S	Aliphatics
1400-1360	S	Aliphatics
1250	S	Esters, phenols, ethers
1150-900	S	C-O
800, 740	M	Aromatic substitution

Comments: Substituted aromatics and possibly esters. Weak spectrum.

LRMS REPORT

Categories, present

Intensity	
100	Polycyclic Aromatic Hydrocarbons
1	Carboxylic Acids and Their Derivatives
.1	Fused Non-Alternant Polycyclic Hydrocarbons

Subcategories, specific compounds

Intensity

100 Polycyclic Aromatic Hydrocarbons

a. Naphthalene, alkyl series
MW 128-184

b. Acenaphthene
MW 154

c. Phenanthrene/anthracene
MW 178

d. Pyrene/fluoranthene
MW 202

e. Chrysene, alkyl series
MW 228

f. Benzopyrene, alkyl series
MW 252

g. Dibenzoperylene, alkyl series
MW 326

h. Benzoperylene, alkyl series
MW 352

i. Benzochrysene, alkyl series
MW 278

1 Fused Non-Alternant Polycyclic Hydrocarbons

a. Fluorene
MW 166

SEPARATOR VENT
COMBINED PARTICULATE TRAIN CH_2Cl_2 WASHES
LC 4

INFRARED ANALYSIS

TCO = 0.06 mg

Grav = 19 mg

Total = 1.3 mg/m³

IR:

Major Peaks, cm^{-1}	Intensity	Assignment
3500-3300	M	-OH, -NH
3040-3010	M	Aromatic CH
2980-2800	M	Aliphatic CH
1740-1680	S	Carbonyls
1620-1550	S	Aromatic ring, alkenes
1445	S	Aliphatics
1400-1350	M	Aliphatics
1300-1200	M	Phenols, ethers, amines
1070	S	Aliphatic C-O, aromatic overtones
920, 850, 670	W	Aromatic substitution

Comments: Similar to LC 3, more carbonyl band, possibly heterocyclic N.

LRMS REPORT

Categories, present

Intensity	
100	Polycyclic Aromatic Hydrocarbons
100	Heterocyclic Nitrogen Compounds
100	Heterocyclic Sulfur Compounds
1	Carboxylic Acids and Their Derivatives

Subcategories, specific compounds

Intensity		
100	Polycyclic Aromatic Hydrocarbons	
	a.	Benzocoronene, alkyl series MW 350-364
100	Heterocyclic Nitrogen Compounds	
	a.	Azabenzoperylene

Other: Major compounds in the fraction are in the m/e 250 m/e 420 range.

SEPARATOR VENT
COMBINED PARTICULATE TRAIN CL_2Cl_2 WASHES
LC 5

INFRARED ANALYSIS

TCO = 0.03 mg

Grav = 22 mg

Total = 1.5 mg/m³

IR:

Major Peaks, cm^{-1}	Intensity	Assignment
3600-3100	M	-OH, -NH
3030	M	Aromatic CH
2980-2820	S	Aliphatic CH
1720, 1710, 1695	S	Carbonyls
1590	S	Aromatic ring, amines
1510-1500	S	Aromatic ring
1440, 1370	S	Aliphatics
1260	S	Phenols, aromatic esters
1190	S	Aromatic ethers, amines aliphatic ethers
1090, 1070, 1020	S	Aliphatic alcohols
950, 880	S	Alkenes
800, 738	M	Aromatic substitution

Weak Peaks: 1920-1860

Comments: Contains heterocyclic N and amines, probably alkyl esters and phthalates, heterocyclic O and alcohols are possible, not a heavily aromatic fraction.

LRMS REPORT

Categories, present

Intensity	
100	Heterocyclic Nitrogen Compounds
100	Heterocyclic Sulfur Compounds
100	Heterocyclic Oxygen Compounds
100	Carboxylic Acids and Their Derivatives
100	Heterocyclic Nitrogen Compounds MW >217
100	Heterocyclic Sulfur Compounds MW >270
100	Heterocyclic Oxygen Compounds MW >276
1	Carboxylic Acids and Their Derivatives
	a. Phthalates

Other: This fraction is similar to LC 4.

SEPARATOR VENT
COMBINED PARTICULATE TRAIN CH_2Cl_2 WASHES
LC 6

INFRARED ANALYSIS

TCO = neg.

Grav = 47 mg

Total = 3.2 mg/m^3

IR:

Major Peaks, cm^{-1}	Intensity	Assignment
3700-2200	S	-OH
3040	S	Aromatic CH
1680-1580	S	Aromatic ring, alkenes, amines
1460-1430, 1370	S	Aliphatics
1275, 1255	S	Phenols
1120-900	M	Alkenes, alcohols, amines
850-820	M	Aromatics, alkenes
800, 740	M	Aromatic substitution
680	W	Alkenes, aromatic substitution or halogens

Comments: Phenols, possibly heterocyclic N or heterocyclic O, no carbonyls.

LRMS REPORT

Categories, present

Intensity	
10	Phenols
10	Heterocyclic Nitrogen Compounds

Subcategories, specific compounds

Intensity	
10	Phenols
	a. Phenol, alkyl series MW 94-150
10	Heterocyclic Nitrogen Compounds
	a. Quinoline, alkyl series MW 129-171

SEPARATOR VENT
COMBINED PARTICULATE TRAIN CH_2Cl_2 WASHES
LC 7

INFRARED ANALYSIS

TCO = neg.

Grav = 14 mg

Total = 0.94 mg/m^3

IR:

Major Peaks, cm^{-}	Intensity	Assignment
3600-2500	S	-OH, water
3020	W	Aromatic CH
2900-2840	M	Aliphatic CH
1440	S	Aliphatics, water
1375	W	Aliphatics
1250, 750	W	CH_2Cl_2

Comments: Mostly water, probably phenols, no good carbonyl band for carboxylic acids.

LRMS REPORT

Categories, present

Intensity	
100	Carboxylic Acids and Their Derivatives
10	Amines

Subcategories, specific compounds

Intensity	
100	Carboxylic Acids and Their Derivatives
	a. Dichlorobenzoic acid MW 190
10	Amines
	a. Aniline, alkyl series MW 121-149

Other: Region between m/e 240 and 400 is very complex.

SEPARATOR VENT
COMBINED PARTICULATE TRAIN CH_2Cl_2 WASHES
LC 8

INFRARED ANALYSIS

TCO = 0.03 mg

Grav = 22 mg

Total = 1.5 mg/m^3

IR:

Major Peaks, cm^{-1}	Intensity	Assignment
No IR bands.		

LRMS REPORT

Categories, present

Intensity	
100	Alkyl Halides
10	Carboxylic Acids and Their Derivatives

Subcategories, specific compounds

Intensity	
100	Alkyl Halides
	a. Methyl chloride MW 50-52
10	Carboxylic Acids and Their Derivatives
	a. Esters, methyl esters of long chain acids MW 278, 274, 287
	b. Phthalates MW 149

Other: 70 eV LRMS is too noisy to be interpreted.

ORGANIC EXTRACT SUMMARY, SEPARATOR VENT SAMPLE, COMBINED PARTICULATE TRAIN CH_2Cl_2 WASHES

	LC 1	LC 2	LC 3	LC 4	LC 5	LC 6	LC 7	LC 8
Total organics								
mg/m^3	1.9	0.74	1.3	1.3	1.5	3.2	0.94	1.5
TCO, mg	0.14	0.03	0.08	0.06	0.03	neg	neg	0.03
GRAV, mg	28	11	19	19	22	47	14	22
Category Int/mg/m^3								
Aliphatic Hydrocarbons	100/1.9							
Polycyclic Aromatic Hydrocarbons			100/1.3	100/.43				
Heterocyclic N Compounds				100/.43	100/.48	10/1.6		
Heterocyclic O Compounds					100/.48			
Phenols						10/1.6		
Amines							10/.085	
Carboxylic Acids and Their Derivatives					10/.048		100/.85 100/.85	10/.14 10/.14
Alkyl Halides								100/1.4

Int: Intensity

SEPARATOR VENT

COMBINED ORGANIC MODULE EXTRACTS

SEPARATOR VENT
COMBINED ORGANIC MODULE EXTRACTS

INFRARED ANALYSIS

TCO = 28000 mg

Grav = 34000 mg

Total = 4200 mg/m^3

IR:

Major Peaks, cm^{-1}	Intensity	Assignment
3510	S	Free -OH
3500-2100	S	-OH, -NH
3060-3020	S	Aromatic CH
2980-2840	S	Aliphatic CH
1600, 1515	S	Aromatic ring
1475-1450	S	Aliphatics
1380	S	Aliphatics
1370-1300	M	Heterocyclic C-N
1270-1170	S	Phenols
1155	S	Phenols, cresols
1110	S	Alcohols
1050-980	M	Alcohols
930	M	Phenols
875, 845, 690	M	Aromatic substitution
810, 785, 770, 750	S	Aromatic substitution

Weak Peaks: 2730

Comments: Predominately phenols with indications of heterocyclic N.

LC FRACTIONATION RESULTS

Quantity taken for LC: 166 mg TCO, 202 mg Grav, in 0.59% total sample

Fraction	TCO mg	Grav mg	Total mg	Total mg/m^3
LC 1	14000	7100	21000	1400
LC 2	14000	1900	16000	1100
LC 3	9600	1700	11000	750
LC 4	1200	460	1700	110
LC 5	4100	640	4700	310
LC 6	25000	6300	31000	2100
LC 7	800	700	1500	100
LC 8	200	1600	1800	120

SEPARATOR VENT
COMBINED ORGANIC MODULE EXTRACTS
LC 1

INFRARED ANALYSIS

TCO = 14000 mg

Grav = 7100 mg

Total = 1400 mg/m^3

IR:

Major Peaks, cm^{-}	Intensity	Assignment
3080	W	Aromatic CH
2960, 2930, 2860	S	Aliphatic CH
1465	M	Aliphatics
1380	W	Aliphatics
905	W	Alkenes
720	W	Aliphatics

Weaks Peaks: 1640

Comments: Predominately aliphatic hydrocarbons with some branching, possibly contains a trace of aromatics.

LRMS REPORT

Categories, present

Intensity	
100	Aliphatic Hydrocarbons
1	Aromatic Hydrocarbons

Subcategories, specific compounds

Intensity	
100	Aliphatic Hydrocarbons
	a. Alkanes, alkyl series
	b. Alkenes,
	c. Cycloalkanes
1	Aromatic Hydrocarbons
	a. Benzene, alkyl series

SEPARATOR VENT
COMBINED ORGANIC MODULE EXTRACTS
LC 2

INFRARED ANALYSIS

TCO = 14000 mg

Grav = 1900 mg

Total = 1100 mg/m³

IR:

Major Peaks, cm^{-1}	Intensity	Assignment
3050, 3005	M	Aromatic CH
2960, 2910	S	Aliphatic CH
2860	M	Aliphatic CH
1595, 1505	M	Aromatic ring
1450	M	Aliphatics
1385	M	Aliphatics
1015, 1010	M	Aromatic ethers
955, 940, 910, 845	W	Alkanes
810	M	Aromatic substitution
780	S	Aromatic substitution
765, 735, 690	M	Aromatic substitution
715	W	Aromatic substitution
470	M	Aromatics

Weak Peaks: 1265, 1125, 610

Comments: Predominately aromatics with a good deal of aliphatic substitution, probably PAH's.

LRMS REPORT

Categories, present

Intensity	
100	Polycyclic Aromatic Hydrocarbons
1	Fused Non-Alternant Polycyclic Hydrocarbons

Subcategories, specific compounds

Intensity	
100	Polycyclic Aromatic Hydrocarbons
	a. Naphthalene, alkyl series MW 128-156, 170
	b. Acenaphthene, alkyl series MW 152-66
	c. Phenanthrene/anthracene, alkyl series
	d. Tetrahydroanthracene/phenanthrene MW 184, 198
1	Fused Non-Alternant Polycyclic Hydrocarbons
	a. Fluorene, alkyl series MW 166, 182

SEPARATOR VENT
COMBINED ORGANIC MODULE EXTRACTS
LC 3

INFRARED ANALYSIS

TCO = 9600 mg

Grav 1700 mg

Total 750 mg/m^3

IR:

Major Peaks, cm^{-1}	Intensity	Assignment
3050	S	Aromatic CH
3005	M	Aromatic CH
2860, 2860	M	Aliphatic CH
2910	S	Aliphatic CH
1595, 1505	M	Aromatic ring
1450, 1425	M	Aliphatics
1385	W	Aliphatics
1015, 1010	M	Aromatic overtones
955, 940, 910	W	Aliphatics
825	W	Aromatic substitution
810, 765, 690	M	Aromatic substitution
780, 735	S	Aromatic substitution

Weak Peaks: 1195, 1185, 1125, 870, 610

Comments: Predominately aromatics, PAH's and aliphatic substituted aromatics.

LRMS REPORT

Categories, present

Intensity	
100	Polycyclic Aromatic Hydrocarbon
1	Fused Non-Alternant Polycyclic Hydrocarbons

Subcategories, specific compounds

Intensity	
100	Polycyclic Aromatic Hydrocarbons
	a. Naphthalene, alkyl series MW 128-156
	b. Acenaphthylene, alkyl series MW 152-180
	c. Phenanthrene/anthracene, alkyl series MW 178-192
	d. Pyrene, alkyl series MW 202-216, 230
	e. Chrysene MW 228, 242, 256
	f. Dihydrochrysene MW 230, 244
1	Fused Non-Alternant Polycyclic Hydrocarbons
	a. Fluorene, alkyl series MW 166-182, 197

SEPARATOR VENT
COMBINED ORGANIC MODULE EXTRACTS
LC 4

INFRARED ANALYSIS

TCO = 1200 mg

Grav = 460 mg

Total = 110 mg/m³

IR:

Major Peaks, cm^{-1}	Intensity	Assignment
3410	S	-NH
3070-3000	W	Aromatic CH
2960, 2929	S	Aliphatic CH
2860	M	Aliphatic CH
1630-1570	M	Amines, aromatic ring
1480	S	Aromatic ring
1450	S	Aliphatics
1375	W	Aliphatics
1350-1300	W	Amines
1260	S	Aromatic amines, ethers
1190	S	Alkanes
1080	S	C-N
795	S	Aromatic substitution
760, 715	W	Aromatic substitution
740	M	Aromatic substitution

Weak Peaks: 1150

Comments: Aromatic amines and heterocyclic N present.

LRMS REPORT

Categories, present

Intensity	
100	Heterocyclic Nitrogen Compounds
10	Phenols
1	Carboxylic Acids and Their Derivatives

Subcategories, specific compounds

Intensity

100 Heterocyclic Nitrogen Compounds

a. Indole, alkyl series
MW 117-145

b. Carbazole, alkyl series
MW 167-181

c. Benzocarbazole
MW 217-231, 245

10 Phenols

a. Phenol, alkyl series
MW 94, 108, 122, 136, 150

Other: Thiophene MW 84-98

SEPARATOR VENT
COMBINED ORGANIC MODULE EXTRACTS
LC 5

INFRARED ANALYSIS

TCO = 4100 mg

Grav = 640 mg

Total = 310 mg/m^3

IR:

Major Peaks, cm^{-1}	Intensity	Assignment
3420	S	-OH
3020	W	Aromatic CH
2960, 2920	S	Aliphatic CH
2860	M	Aliphatic CH
2230	W	Nitriles
1730-1650	W	Carbonyls
1590	M	Aromatic ring
1500, 1485, 1475	S	Aromatic ring
1460	S	Alkanes
1375, 1325	W	Alkanes, alcohols
1260	M	Phenols, esters, ethers
1230, 1150	W	Phenols
1195	S	Phenols, esters, ethers
1105	M	C-O
850, 840, 800	M	Aromatic substitution
750	S	Aromatic substitution

Weak Peaks: 1610, 1085, 925, 905

Comments: Predominately phenolic with nitriles and esters probable.

LRMS REPORT

Categories, present

Intensity	
100	Phenols
10	Heterocyclic Sulfur Compounds
1	Carboxylic Acids and Their Derivatives

Subcategories, specific compounds

Intensity	
100	Phenols
	a. Phenol, alkyl series MW 94-170
	b. Naphthol MW 144, 158, 172
	c. Phenyl phenol
10	Heterocyclic Sulfur Compounds
	a. Thiophene, alkyl series MW 84, 98

SEPARATOR VENT
COMBINED ORGANIC MODULE EXTRACTS

LC 6

INFRARED ANALYSIS

TCO = 25000 mg

Grav = 6300 mg

Total = 2100 mg/m^3

IR:

Major Peaks, cm^{-1}	Intensity	Assignment
3370	S	-OH, -NH
3030	W	Aromatic CH
2960, 2920, 2860	W	Aliphatic CH
1595, 1510, 1495	S	Aromatic ring, amines
1465	S	Aliphatics
1380, 1310	M	Aliphatics
1235	S	Phenols
1150	M	Phenols
1105	M	C-O
1065, 1040	W	C-O
995, 925	W	Aliphatics
875, 840, 770, 705	W	Aromatic substitution
805, 685	M	Aromatic substitution
750	S	Aromatic substitution

LRMS REPORT

Categories, present

Intensity	
100	Phenols
10	Amines

Subcategories, specific compounds

Intensity	
100	Phenols

a. Phenol, alkyl series
MW 94-136

b. Indanol, alkyl series
MW 134-148

c. Naphthol
MW 144-158

SEPARATOR VENT
COMBINED ORGANIC MODULE EXTRACTS

LC 7

INFRARED ANALYSIS

TCO = 800 mg

Grav = 700 mg

Total = 100 mg/m^3

IR:

Major Peaks, cm^{-1}	Intensity	Assignment
No IR bands		

LRMS REPORT

Categories, present

Intensity	
100	Phenols
10	Amines

Subcategories, specific compounds

Intensity	
100	Phenols
	a. Phenol, alkyl series MW 94-136
10	Amines
	a. Aniline, alkyl series MW 107-149

SEPARATOR VENT
COMBINED ORGANIC MODULE EXTRACTS

LC 8

INFRARED ANALYSIS

TCO = 200 mg

Grav = 1600 mg

Total = 120 mg/m^3

IR:

Major Peaks, cm^{-1}	Intensity	Assignment
No IR bands except water.		

LRMS REPORT

Categories, present

Intensity

Trace Carboxylic Acids and Their Derivatives

Trace Amines

Subcategories, specific compounds

Intensity

Trace Carboxylic Acids and Their Derivatives

a. Methyl esters of long chain carboxylic acids

b. Esters, phthalates

Trace Amines

a. Aniline, alkyl series MW 93, 107, 121

Other: Chloroacetic acid present, m/e 50, 52 major peaks.

ORGANIC EXTRACT SUMMARY, SEPARATOR VENT SAMPLE. COMBINED ORGANIC MODULE EXTRACTS

	LC1	LC2	LC3	LC4	LC5	LC6	LC7	LC8
Total organics, mg/m^3	1400	1100	750	110	310	2100	100	120
TCO, mg	14000	14000	9600	1200	4100	25000	800	200
GRAV, mg	7100	1900	1700	460	640	6300	700	1600
Category Int/mg/m^3								
Aliphatic Hydrocarbons	100/1400							
Polycyclic Aromatic Hydrocarbons		100/1100	100/750					
Heterocyclic N Compounds				100/100				
Phenols				10/10	100/280	100/1900	100/90	
Heterocyclic S Compounds					10/28			
Amines						10/190	10/9	

Int: Intensity

SEPARATOR LIQUOR

CH_2Cl_2 EXTRACT

SEPARATOR LIQUOR, CH_2Cl_2 EXTRACT

INFRARED ANALYSIS

TCO = 490 mg

Grav = 680 mg

Total = 4.8 g/l

IR:

Major Peaks, cm^{-1}	Intensity	Assignment
3700-3500	S	-OH
3040	S	Aromatic CH
2980-2900	S	Aliphatic CH
2860	M	Aliphatic CH
1590	S	Aromatic ring
1510, 1495	S	Cresols, catechols, aromatic ring
1465	S	Alkanes
1380-1340	S	Alkanes
1260-1200	S	Aromatic ethers alcohols
1150	S	Aliphatic ethers phenols
1110	M	Cresols
1070	W	Aliphatic C-O, C-N
840, 810, 770 750, 690	M	Aromatic substitution

Weak Peaks: 1040-1000, 925, 505

Comments: Aromatics, aliphatics, phenols, cresols appear to be present. Heterocyclic N and possibly heterocyclic O is present. Carboxylic acids also are indicated.

LC FRACTIONATION RESULTS

Quantity taken for LC: 490 mg TCO; 680 mg Grav in 2.4% total sample

Fraction	TCO mg	Grav mg	Total mg	Total mg/l
LC 1	2.1	210	210	21
LC 2	12	83	95	9.5
LC 3	160	540	700	70
LC 4	4100	1800	5900	590
LC 5	6400	7500	14000	1400
LC 6	6500	9200	16000	1600
LC 7	3700	5800	9500	950
LC 8	25	2400	2400	240

SEPARATOR LIQUOR, CH_2Cl_2 EXTRACT
LC 1

INFRARED ANALYSIS

TCO = 2.1 mg

Grav = 210 mg

Total = 21 mg/l

IR:

Major Peaks, cm^{-1}	Intensity	Assignment
3600-2000	S	-OH
2960-2850	S	Aliphatic CH
1660-1580	S	H_2O
1470-1370	S	Aliphatics
1200-970	S	Aliphatic C-O

Comments: Low molecular weight, linear aliphatics, very little indication of aliphatic branching. Sample appears to be wet.

LRMS REPORT

Categories, present

Intensity	
100	Aliphatic Hydrocarbons
1	Aromatic Hydrocarbons

Subcategories, specific compounds

Intensity	
100	Aliphatic Hydrocarbons
	a. Alkanes
	b. Cycloalkanes
	c. Alkenes

Other: MW up to 253, 295; aliphatics. Sulfur, S_8, Intensity 10.

SEPARATOR LIQUOR, CH_2Cl_2 EXTRACT
LC 2

INFRARED ANALYSIS

TCO = 12 mg

Grav = 83 mg

Total = 9.5 mg/l

IR:

Major Peaks, cm^{-1}	Intensity	Assignment
3500-3000		H_2O
2950-2920		Aliphatic CH
1650		H_2O
1400		Aliphatics

Comments: Very similar to previous LC fraction. Primarily aliphatic with evidence of moisture in the IR.

LRMS REPORT

Categories, present

Intensity	
100	Aliphatic Hydrocarbons
1	Aromatic Hydrocarbons

Subcategories, specific compounds

Intensity		
100	Aliphatic Hydrocarbons	
	a.	Alkane, alkyl series C_{10}-C_{18}
	b.	Alkene, alkyl series MW 168-196
1	Aromatic Hydrocarbons	
	a.	Benzene, alkyl series MW 92-106

Other: Sulfur, S_8, Intensity 1.

SEPARATOR LIQUOR, CH_2Cl_2 EXTRACT
LC 3

INFRARED ANALYSIS

TCO = 160 mg

Grav = 540 mg

Total = 70 mg/l

IR:

Major Peaks, cm^{-1}	Intensity	Assignment
3600-3100	W	H_2O
3040	M	Aromatic CH
1730-1680	W	Carbonyls
1600	S	Aromatic ring
1500-1419	S	Aromatics, aliphatics
1375	S	Alkanes
1260-1220	S	C-O or C-N
880	S	Conjugated aromatics
840, 810, 750	S	Aromatic substitution
710	M	Aromatic substitution

Comments: Fairly linear aliphatics, aromatics with little or no functional substitution, most likely PAH's.

LRMS REPORT

Categories, present

Intensity	
100	Polycyclic Aromatic Hydrocarbons

Subcategories, specific compounds

Intensity	
100	Polycyclic Aromatic Hydrocarbons

a. Naphthalene, alkyl series

b. Acenaphthylene, alkyl series
MW 152-166

c. Phenanthrene/anthracene
MW 178, 192, 206

d. Pyrene
MW 202, 216, 230

e. Benzopyrene
MW 252-268, 280

SEPARATOR LIQUOR, CH_2Cl_2 EXTRACT
LC 4

INFRARED ANALYSIS

TCO = 4100 mg

Grav = 1800 mg

Total = 590 mg/l

IR:

Major Peaks, cm^{-1}	Intensity	Assignment
3600-3250	S	-NH, -OH
3050, 3015	M	Aromatic CH
2960-2850	S	Aliphatic CH
1590	S	Aromatic ring, amines
1505	S	Aromatic ring
1480, 1440, 1380	S	Aliphatics
1330	S	C-N
1260	S	Heterocyclic N or O
1230-1100	S	Heterocyclic O
1050-1000	M	Cresols, alcohols
810-780, 765, 740, 690	M	Aromatic substitution

Comments: Phenols present, probably amines or heterocyclic N also.

LRMS REPORT

Categories, present

Intensity	
100	Heterocyclic Nitrogen Compounds
10	Phenols
10	Heterocyclic Sulfur Compounds

Subcategories, specific compounds

Intensity	
100	Heterocyclic Nitrogen Compounds
	a. Benzocarbazole, alkyl series MW 217-259
	b. Carbazole, alkyl series MW 167-195
10	Phenols
	a. Phenol, alkyl series MW 94-136
	b. Naphthol, alkyl series MW 144-172
10	Heterocyclic Sulfur Compounds
	a. Dibenzothiophene, alkyl series MW 184,198, 212, 226

SEPARATOR LIQUOR, CH_2Cl_2 EXTRACT
LC 5

INFRARED ANALYSIS

TCO = 6400 mg

Grav = 7500 mg

Total = 1400 mg/l

IR:

Major Peaks, cm^{-1}	Intensity	Assignment
3600-2800	S	-OH, -NH
3060-3040	S	Aromatic CH
2960, 2920, 2860	S	Aliphatic CH
1615-1590	S	Aromatic ring
1515	S	Aromatic ring
1490	S	Aromatic ring
1470-1450	S	Aliphatics
1380	M	Aliphatics
1360	M	Aliphatics
1300-1175	S	Heterocyclic O
1260	S	Heterocyclic O
1150	S	Ethers, alcohols
1120	M	Aliphatic ethers
1050-900	W	Phenols
840, 810, 770, 750, 690	M	Aromatic substitution

Weak Peaks: 1555

Comments: Phenols, probably heterocyclic O, possibly heterocyclic N.

LRMS REPORT

Categories, present

Intensity	
100	Phenols
10	Heterocyclic Oxygen Compounds
1	Heterocyclic Nitrogen Compounds

Subcategories, specific compounds

Intensity	
100	Phenols
	a. Phenol, alkyl series MW 94-136, 150
	b. Naphthol, alkyl series MW 144-172
	c. Acenaphthenol, alkyl series MW 170, 184, 198
10	Heterocyclic Oxygen Compounds
	a. Benzofuran, alkyl series MW 118-132

SEPARATOR LIQUOR, CH_2Cl_2 EXTRACT
LC 6

INFRARED ANALYSIS

TCO = 6500 mg

Grav = 9200 mg

Total = 1600 mg/l

IR:

Major Peaks, cm^{-1}	Intensity	Assignment
3600-2800	S	-OH, -NH
3060-3040	S	Aromatic CH
2960, 2929, 2860	S	Aliphatic CH
1615-1590	S	Aromatic ring
1515	S	Aromatic ring
1490	S	Aromatic ring
1470-1450	S	Aliphatics
1380	M	Aliphatics
1360	M	Aliphatics
1300-1175	S	Heterocyclic O
1260	S	Heterocyclic O
1150	S	Ethers, alcohols
1120	M	Aliphatic ethers
1050-900	W	Phenols
840, 810, 770, 750, 690	M	Aromatic substitution

Comments: The -OH is more acidic than LC 5, phenols, and probably heterocyclic O present.

LRMS REPORT

Categories, present

Intensity	
100	Phenols

Subcategories, specific compounds

Intensity	
100	Phenols

a. Phenol, alkyl series
MW 94-136

b. Indanol, alkyl series
MW 134-162

c. Naphthol, alkyl series
MW 144-172, 186, 200, 214

SEPARATOR LIQUOR, CH_2Cl_2 EXTRACT
LC 7

INFRARED ANALYSIS

TCO = 3700 mg

Grav = 5800 mg

Total = 950 mg/l

IR:

Major Peaks, cm^{-1}	Intensity	Assignment
3600-2300	S	-OH
3050	M	Aromatic CH
2900-2850	M	Aliphatic CH
1645	S	Alkenes
1620-1590	S	Aromatic ring
1510	S	Aromatic ring
1460-1440	S	Aliphatics
1385-1415	S	Aliphatics
1300-1150	S	Phenolic C-O
1150-1050	W	Aliphatic C-O
830, 810, 765, 690	W	Aromatic substitution

Comments: Phenols definitely indicated, IR does not support LR/MS thiophenols.

LRMS REPORT

Categories, present

Intensity	
100	Phenols
100	Thiols

Subcategories, specific compounds

Intensity		
100	Phenols	
	a.	Benzene, dihydric, polyhydric MW 110, 124, 138, 152
	b.	Naphthol MW 138, 144
	c.	Phenol, alkyl series MW 94
100	Thiols	
	a.	Thiophenol, alkyl series MW 110, 124, 138, 152
	b.	Thiophenol, phenyl, alkyl series MW 186, 200, 214

SEPARATOR LIQUOR
CH_2Cl_2 EXTRACT
LC 8

INFRARED ANALYSIS

TCO = 26 mg

Grav = 2400 mg

Total = 240 mg/l

IR:

Major Peaks, cm^{-1}	Intensity	Assignment
3600-2600	S	-OH, H_2O
2960-2850	S	Aliphatic CH
1635	S	Olefinic C
1600	S	Aromatic ring
1500	S	Aromatic ring
1450	S	Aliphatics
1400-1350	S	Aliphatics
1300-1150	S	Phenolic C-O
1100-1050	S	Aliphatic C-O
1020	S	Aliphatics C-O
750	M	Aromatic substitution

Comments: Aliphatic carboxylic acids, quite probably, phenols probable. Aliphatic alcohols are late for the LC scheme.

LRMS REPORT

Categories, present

Intensity	
100	Glycols, Epoxides
100	Carboxylic Acids and Their Derivatives

Subcategories, specific compounds

Intensity	
100	Glycols, Epoxides
	a. Alkyl glycols MW 118, 132, 146
100	Carboxylic Acids and Their Derivatives
	a. Unsaturated carboxylic acid MW 128, $C_7H_{12}O_2$

ORGANIC EXTRACT SUMMARY TABLE, SEPARATOR LIQUOR SAMPLE, CH_2Cl_2 EXTRACT

	LC 1	LC 2	LC 3	LC 4	LC 5	LC 6	LC 7	LC 8
Total organics,								
mg/l	21	9.5	70	590	1400	1600	950	240
TCO, mg	2.1	12	160	4100	6400	6500	3700	25
Grav, mg	210	83	540	1800	7500	9200	5800	2400
Category Int/mg/m^3								
Aliphatic Hydrocarbons	100/19	100/9.5						
Polycyclic Aromatic Hydrocarbons			100.70					
Heterocyclic N Compounds				100/490				
Heterocyclic S Compounds				10/49				
Phenols				10/49	100/1300	100/1600	100/480	
Heterocyclic O Compounds					10/130			
Thiols							100/480	
Glycols, Epoxides								100/120
Carboxylic Acids and Their Derivatives								100/120

Int: Intensity

BY-PRODUCT TAR

CH_2Cl_2 EXTRACT

BY-PRODUCT TAR, CH_2Cl_2 EXTRACT

INFRARED ANALYSIS

TCO = 66 mg

Grav = 1400 mg

Total = 770 g/kg

IR:

Major Peaks, cm^{-1}	Intensity	Assignment
3600-2100	M	-OH
3050-3020	M	Aromatic CH
2960-2850	S	Aliphatic CH
1600	S	Aromatic Ring, amines
1450	S	Aliphatics
1375	S	Aliphatics
1350-1100	S	Phenols
1030	W	Alcoholic C-O
875	M	Aromatic substitution
810	S	Aromatic substitution
750	S	Aromatic substitution

Comments: Highly oxygenated material, phenols, substituted nitrogen compounds or N-heterocycles possible.

LC FRACTIONATION RESULTS

Quantity Taken for LC: 6.5 mg TCO, 143 mg Grav in 9.9% total samples

Fraction	TCO mg	Grav mg	Total mg	Total g/kg
LC 1	6.1	200	210	110
LC 2	3.6	71	75	39
LC 3	68	470	540	280
LC 4	10	190	200	100
LC 5	35	120	160	83
LC 6	30	560	590	310
LC 7	0.6	180	180	95
LC 8	7.4	160	170	89

BY-PRODUCT TAR, CH_2Cl_2 EXTRACT

LC 1

INFRARED ANALYSIS

TCO = 6.1 mg

Grav = 200 mg

Total = 100 g/kg

IR:

Major Peaks, cm^{-1}	Intensity	Assignment
3600-3100	M	-OH
2910	S	Aliphatic CH
2850	S	Aliphatic CH
1640	W	Water
1450	M	Aliphatics
1370	W	Aliphatics

Comments: Aliphatic hydrocarbons, no good indications of halogens.

LRMS REPORT

Categories, present

Intensity	
100	Aliphatic Hydrocarbons
Trace	Aromatic Hydrocarbons

Subcategories, specific compounds

Intensity	
100	Aliphatic Hydrocarbons
	a. Alkanes, C_{10}-C_{18}
	b. Alkenes

BY-PRODUCT TAR, CH_2Cl_2 EXTRACT
LC 2

INFRARED ANALYSIS

TCO = 3.6 mg

Grav = 71 mg

Total = 39 g/kg

IR:

Major Peaks, cm^{-1}	Intensity	Assignment
2590-2910	S	Aliphatic CH
2850	M	Aliphatic CH
1450	M	Aliphatics
1375	W	Aliphatics

Comments: Aliphatics, no strong halogen indications, no strong aromatic bands.

LRMS REPORT

Categories, present

Intensity	
100	Aromatic Hydrocarbons
10	Aliphatic Hydrocarbons

Subcategories, specific compounds

Intensity	
100	Aromatic Hydrocarbons
	a. Benzene, alkyl series MW 92-148
	b. Naphthalene, alkyl series MW 210, 224, 238
10	Aliphatic Hydrocarbons
	a. Alkane, alkyl series

BY-PRODUCT TAR, CH_2Cl_2 EXTRACT
LC 3

INFRARED ANALYSIS

TCO = 68 mg

Grav = 470 mg

Total = 280 g/kg

IR:

Major Peaks, cm^{-1}	Intensity	Assignment
3540	W	-NH
3040	S	Aromatic CH
2990-2850	S	Aliphatic CH
1750-1670	M	Carbonyls
1600	S	Aromatic ring
1440	S	Aliphatics
1400	M	Aliphatics
1375	S	Aliphatics
1300	M	Phenols, aromatic amines, N-heterocycles
1260	M	Aromatic amines, aromatic esters
1175	S	Alyl phenols, amines, S-O
945	M	Aromatic esters, aromatic amines
875	M	Aromatic substitution
810	M	Aromatic substitution
750	M	Aromatic substitution

Weak Peaks: 2720, 465, 420

Comments: Aromatics, broad carbonyl peak is early in LC scheme for aldehydes or ketones. Nitrogen compounds not substantiated by LR/MS. Phenols are not likely nor are they substantiated by LR/MS.

LRMS REPORT

Categories, present

Intensity

100 Polycyclic Aromatic Hydrocarbons

Subcategories, specific compounds

Intensity

100 Polycyclic Aromatic Hydrocarbons

a. Napthalene, alkyl series
MW 128-170, 184, 198

b. Acenaphthylene, alkyl series
MW 152, 166, 180

c. Acenaphthene, alkyl series
MW 154, 168, 182

d. Phenanthrene/anthracene, alkyl series
MW 178, 192, 206

e. Fluoranthene/pyrene, alkyl series
MW 202, 216, 230

f. Chrysene, alkyl series
MW 228

g. Benzopyrene, alkyl series
MW 252

Other: Fused polycyclic aromatics between m/e 300 m/e 400

BY-PRODUCT TAR, CH_2Cl_2 EXTRACT
LC 4

INFRARED ANALYSIS

TCO = 10 mg

Grav = 190 mg

Total = 100 g/kg

IR:

Major Peaks, cm^{-}	Intensity	Assignment
3410	S	-NH
3550-3150	M	-OH, -NH
3040	S	Aromatic CH
2950-2820	S	Aliphatic CH
1600	S	Aromatic ring, amines
1440	S	Alkanes
1375	S	Aliphatics, amines
1320	S	Aliphatics
1260	S	Aromatic amines
1230	M	Aromatic amines or esters
1190	M	Aromatic amines
1025	M	Aromatic ethers
875	M	C-O, C-N
800	S	Aromatic substitution
745	S	Aromatic substitution
700	M	Aromatic substitution

Comments: Stronger nitrogen indications than LC 3. Nitrogen heterocycles probable, along with heavily substituted aromatics, PAH's. Early in LC scheme for alcohols. Possibly heterocyclic O.

LRMS REPORT

Categories, present

Intensity	
100	Polycyclic Aromatic Hydrocarbons
100	Heterocyclic Nitrogen Compounds
100	Heterocyclic Oxygen Compounds

Subcategories, specific compounds

Intensity	
100	Polycyclic Aromatic Hydrocarbons
	a. Coronene, alkyl series MW 300, 326, 340, etc.
100	Heterocyclic Nitrogen Compounds
	a. Carbazole, alkyl series MW 167-209
100	Heterocyclic Oxygen Compounds MW 280, 294, 308

BY-PRODUCT TAR, CH_2Cl_2 EXTRACT
LC 5

INFRARED ANALYSIS

TCO = 35 mg

Grav = 120 mg

Total = 83 g/kg

IR:

Major Peaks, cm^{-1}	Intensity	Assignment
3400	S	-OH, -NH
3050	M	Aromatic CH
3000-3800	S	Aliphatic CH
2220	W	Nitriles
1600	S	Aromatic ring, amines
1450	S	Aliphatic C-C
1380	S	Aliphatic C-C
1260	S	Heterocyclic N, or -O
1190	S	Heterocyclic N, -O
1030	M	C-N, C-O
880	M	Amines
810	S	Aromatic substitution
745	S	Aromatic substitution
700	M	Aromatic substitution

Weak Peaks: 1680

Comments: Aromatic CH absorbance less than in the previous fraction. Strong indications of amines and heterocyclic N. The C-O bands indicate either alcohols, ethers, or heterocyclic O. Nitriles are quite probably present.

LRMS REPORT

Categories, present

Intensity	
100	Heterocyclic Sulfur Compounds
10	Heterocyclic Nitrogen Compounds
10	Heterocyclic Oxygen Compounds

Subcategories, specific compounds

Intensity	
100	Heterocyclic Sulfur Compounds
	a. Dibenzothiophene, alkyl series MW 184-212
10	Heterocyclic Nitrogen Compounds
	a. Carbazole, alkyl series MW 167, 181, 195
10	Heterocyclic Oxygen Compounds
	a. Benzonaphthofuran, alkyl series MW 246, 260, 274

BY-PRODUCT TAR, CH_2Cl_2 EXTRACT
LC 6

INFRARED ANALYSIS

TCO = 30 mg

Grav 560 mg

Total = 310 g/kg

IR:

Major Peaks, cm^{-1}	Intensity	Assignment
3600-2200	S	-OH, -NH, -COOH
3080-3000	S	Aromatic CH
2980-2820	S	Aliphatic CH
1600	S	Aromatic ring, amines
1520-1050	S	C-O, aliphatics, aromatic ring
900-800	S	Aromatic substitution
740	S	Aromatic substitution
700	M	Aromatic substitution

Comments: Huge acidic -OH region, spectrum broad and not well defined.

LRMS REPORT

Categories, present

Intensity	
100	Phenols
100	Heterocyclic Nitrogen Compounds
100	Heterocyclic Sulfur Compounds
100	Heterocyclic Oxygen Compounds
10	Amines

Subcategories, specific compounds

Intensity	
100	Phenols

a. Phenol, alkyl series
MW 94-136

b. Napthol, alkyl series
MW 144, 158, 172

Other: Due to the complexity of the LRMS, the heterocyclics can not be interpreted into certain specific compounds.

BY-PRODUCT TAR, CH_2Cl_2 EXTRACT

LC 7

INFRARED ANALYSIS

TCO = 0.6 mg

Grav = 180 mg

Total = 95 g/kg

IR:

Major Peaks, cm^{-1}	Intensity	Assignment
3710-3150	M	-NH
3550-2250	S	-OH, H_2O
3050	S	Aromatic CH
2950-2850	S	Aliphatic CH
1600	S	Aromatic ring, amines
1440	S	Alkanes
1375	S	Alkanes
1260	S	Heterocyclic O
1260-1180	M	Heterocyclic O
1080	M	Alcohols, alkyl phenols
860-780	W	Aromatic substitution
750	S	Aromatic substitution

Weaks Peaks: 1640, 1630

Comments: Indicates phenols, possibly napthols. Weak peaks possible for aliphatic and aromatic amines. LR/MS does not confirm phenols or acidic -OH.

LRMS REPORT

Categories, present

Intensity	
100	Amines
100	Heterocyclic Nitrogen Compounds

Subcategories, specific compounds

Intensity	
100	Amines
	a. Aniline, alkyl series MW 93-121
100	Heterocyclic Nitrogen Compounds
	a. Quinoline, alkyl series MW 129-157
	b. Hydroxyazanaphthalene MW 145, 159, 173

Other: Lots of nitrogen containing compounds are indicated by the data.

BY-PRODUCT TAR, CH_2Cl_2 EXTRACT
LC 8

INFRARED ANALYSIS

TCO = 7.4 mg

Grav = 160 mg

Total = 89 g/kg

IR:

Major Peaks, cm^{-1}	Intensity	Assignment
3600-3100	M	-OH, -NH, H O
3050	W	Aromatic CH
2950	S	Aliphatic CH
2850	M	Aliphatic CH
1750-1690	M	Carbonyls
1600	S	Aromatic ring
1530-1510	M	Aromatic ring
1445	S	Alkanes
1370	S	Aliphatics
1320-1000	S	C-O
1260	S	C-O
1100	S	Aliphatic alcohols, ethers
890	M	Aromatic substitution
735	M	Aromatic substitution

Weak Peaks: 1400

Comments: Highly oxygenated, predominately aliphatic carboxylic acids.

LRMS REPORT

Categories, present

Intensity	
10	Alkyl Halides
10	Carboxylic Acids and Their Derivatives

Subcategories, specific compounds

Intensity	
10	Alkyl Halides
	a. Methyl chloride MW 50-52
10	Carboxylic Acids and Their Derivatives
	a. Esters, methyl esters of long chain acids MW 278, 274, 287
1	b. Phthalates

Other: m/e 146, m/e 147