safety sciences

Div. of WSA Inc., 11772 Sorrento Valley Road
San Diego, California 92121 (714) 755-9359

Report No. 411F

Evaluation of an Injury Reporting and Information System (IRIS) for the Solid Waste Management Industry

Final Report: Publications

VOL. III

Performed for
Office of Solid Waste Management Programs
U.S. Environmental Protection Agency
Under Contract No. 68-03-0231
April 1978

safety sciences

Div. of WSA Inc., 11772 Sorrento Valley Road
San Diego, California 92121 (714) 755-9359

Report No. 411F

Evaluation of an Injury Reporting and Information System (IRIS) for the Solid Waste Management Industry

Final Report: Publications

Performed for

Office of Solid Waste Management Programs
U.S. Environmental Protection Agency

Under Contract No. 68-03-0231

April 1978

TABLE OF CONTENTS

		Page
I.	INTRODUCTION	1
II.	QUARTERLY ACCIDENT TRENDS REPORTS	3
III.	QUARTERLY SAFETY MANAGEMENT REPORTS (QSMR's)	6
IV.	IRIS NEWSFLASH	10
V.	MONTHLY IRIS NEWS	11
VI.	SPECIAL REPORTS	13

LIST OF EXHIBITS

ACCIDENT TRENDS REPORTS

EXHIBIT 1 Partial Quarter December 1975
EXHIBIT 2 First Quarter 1976
EXHIBIT 3 Second Quarter 1976: Employee Characteristics
EXHIBIT 4 Third Quarter 1976: Equipment Related Accidents
EXHIBIT 5 Fourth Quarter 1976: Container Handling Accidents
EXHIBIT 6 First Quarter 1977: Caught in Packer Accidents
EXHIBIT 7 Second Quarter 1977: Slips and Falls
EXHIBIT 8 Third Quarter 1977: Specialized Collection Accidents

QUARTERLY SAFETY MANAGEMENT REPORTS

EXHIBIT 9 QSMR Evaluation
EXHIBIT 10 Sample QSMR of User No. 170 for First Quarter 1977

IRIS NEWSFLASH

EXHIBIT 11 Vol. 1, No. 1, January 1977
EXHIBIT 12 Vol. 1, No. 2, May 1977
EXHIBIT 13 Vol. 1, No. 3, June 1977
EXHIBIT 14 Vol. 1, No. 4, September 1977

IRIS NEWS

EXHIBIT 15 Vol. 1, No. 1, April 1977
EXHIBIT 16 Vol. 1, No. 2, May 1977
EXHIBIT 17 Vol. 1, No. 3, June 1977
EXHIBIT 18 Vol. 1, No. 4, July 1977
EXHIBIT 19 Vol. 1, No. 5, August 1977
EXHIBIT 20 Vol. 1, No. 6, September 1977

SPECIAL REPORTS

EXHIBIT 21 The Use of Personal Protective Equipment and Its Effect on Accident Reduction
EXHIBIT 22 The Occurrence of Back Strains (Overexertions) in Relation to the Age and Experience of the Employee

LIST OF EXHIBITS (Continued)

EXHIBIT 23 Crew Type Variations in Size, Type of Shift, and Point of Collection and Their Effects on Injury Rates

EXHIBIT 24 How Differences in Worker's Compensation Policies and Wage Continuation Benefits Affect the Incidence of Injuries

EXHIBIT 25 The Relationship of Injury Rates for Solid Waste Collection to the Types of Equipment in Use

I. INTRODUCTION

This Publications volume is submitted in conjunction with the Final Report on the continuation of Contract No. 63-03-0231, "Full Scale Operation and Use of an Injury Reporting and Analysis System for the Solid Waste Management Industry". This volume contains the IRIS publications of eight Accident Trends reports, a sample Quarterly Safety Management Report, six "IRIS News", four "IRIS Newsflashes", and five Special Reports. These were produced as a by-product of IRIS, as described in the Final Report.

IRIS is an interactive injury reporting and analysis system. For their participation in providing the data, IRIS users receive safety statistics and specific prevention measures, or countermeasures, on a routine basis on their organization as well as the industry. The safety information is presented in the forms of narrative, charts, and tabular and comparative computer printouts, and users are kept anonymous except by express permission. In addition to the users, the IRIS publications are also provided to EPA and national solid waste management organizations.

The solid waste safety topics addressed in the publications were chosen for their interest to safety professionals (e.g., cost effectiveness and injury reduction potential of personal protective equipment), for their relative severity

(e.g., caught in packer injuries), for their relative frequency of occurrence (e.g., container handling injuries), for informing users about national solid waste organizations (e.g., National Safety Council), and for informing users of standards affecting the solid waste industry (e.g., ANSI Z245.1 standard on refuse compaction equipment).

II. QUARTERLY ACCIDENT TRENDS REPORTS

The quarterly Accident Trends reports were developed to be an adjunct to the QSMR's since they discuss the overall accident patterns in the solid waste industry. They were to contain the injury statistics for the quarter, a discussion of the quarter's accident patterns, and news of interest to the industry. However, after two issues, the discussion of the accident patterns for the quarter was deemed too general and repetitive and would lose the interest of the readers (EXHIBITS 1 and 2).

An alternative concept was introduced. The Accident Trends reports 1) discussed a different special topic each quarter, and 2) utilized the whole data base available in the discussion rather than just the quarter's data. This was introduced by the second quarter 1976 Accident Trends report. The special topics covered in the following quarters were:

- employee characteristics (EXHIBIT 3)
- equipment related accidents (EXHIBIT 4)
- container handling accidents (EXHIBIT 5)
- caught in packer accidents (EXHIBIT 6)
- slips and falls (EXHIBIT 7)
- specialized collection accidents (EXHIBIT 8)

Emphasis was placed on narrative discussions of various prevention methods that could be used to reduce specific accident

patterns (e.g., install slip resistant, open mesh steps to reduce 25% of the slips and falls occurring). Statistics were used to support the injury reduction potentials of the prevention methods presented. Types of prevention methods discussed included:

- container regulations (e.g., container weight limits, size limits, lid requirements, etc.)
- employee training (e.g., testing the container weight, proper lifting techniques, getting in and out of the cab, etc.)
- equipment modifications (e.g., tailgate latch, hopper flaps, two-handed packer panel controls, etc.)
- applicable equipment standards (e.g., ANSI Z245.1 standard on refuse collection and compaction equipment, etc.)
- operational alterations (e.g., changing from backyard collection to curbside collection, developing retraining policies, etc.)
- personal protective equipment (e.g., steel toed safety shoes, slip resistant gloves, bump caps, etc.)

In discussing the various prevention measures, emphasis was placed on methods that were tested by IRIS users, as related to IRIS. Their success with them and the problems encountered in implementation are discussed. A survey of container regulations and personal protective equipment required at the IRIS users were also presented in the narrative discussions of the topics. In addition, detailed drawings of equipment modifications installed by IRIS users were presented.

Therefore, the "pool" of IRIS user solid waste expertise was fully utilized and related to all the users. Other contacts the IRIS personnel made at conferences and meetings provided additional helpful information.

The format of the discussion in Section I of the Accident Trends reports was not standardized due to the different ways of handling the various topics. However, an important safety tool, the "Task/Hazards Analysis" chart, was developed as a standard item in three of the reports (see at end of Section I in EXHIBIT 4). It serves as a handy reference chart that has condensed the hazards associated with specific tasks and identified specific countermeasures for reducing the injuries.

III. QUARTERLY SAFETY MANAGEMENT REPORTS (QSMR'S)

This is the only IRIS publication that the IRIS users receive that is individualized. Each QSMR is comprised of three basic sections, the narrative "Evaluation of Problem Areas and Recommendations", the "Overall Injury Rates Compared with Other IRIS Users" containing printouts that rank the users from the highest to the lowest injury rates, and the "Identification of Key Injury Problem Areas" containing printouts on just the user's injuries for the quarter. In the reporting period of December 1975 to September 1977, nearly 300 QSMR's were written.

The time frame for receipt of the QSMR is four months after the end of the quarter. This is lengthier than the two months originally anticipated because many users could not meet the one month deadline on turning in time lost and cost data. Since one of the main functions of the QSMR is to compare the users, it is essential that all users have sent in the necessary injury, time lost and cost, employee and equipment data prior to analyzing the data. With fewer users, the time frame will probably be reduced.

Comments solicited from the users by means of QSMR evaluation forms (EXHIBIT 9) were extremely favorable on the quality of the reports:

> "I evaluate IRIS analysis of injury problems with an A plus, and I agree with it whole-heartedly."

"The report is concise and easily understood. There are no points of disagreement; so far, there appear to be no area(s) that require attention beyond that given."

"IRIS has provided through the QSMR a view of the importance of Safety in the solid waste industry. Management is usually not aware of the high costs of injuries."

"They provide a guide which can be used to strengthen our safety program."

In fact, several users have set up committees to review and evaluate IRIS prevention suggestions.

However, one consistent complaint about the first few issues was its length. Users found that there were too many computer printouts, and they did not have the time to digest them all. Therefore, the QSMR's were streamlined to contain only the more informative computer printouts. For instance, it was decided that tabulating the injuries by part of body and by nature of injury were not as meaningful as by accident type and by activity. They were subsequently removed from the QSMR's. Also, the activity and accident type analyses were altered to compare four quarters of data. A sample QSMR is included in EXHIBIT 10 that include the alterations.

Section I, the "Evaluation of Problem Areas and Recommendations" is the only section that is written individually for each user. The narrative evaluates the user's accident patterns by:

- pointing out high frequency, time lost and direct cost injury categories (e.g., lifting container, slipped on same level, etc.) as compared with the average user

- comparing quarterly accident trends at the user (e.g., increase of slips and falls during winter)
- comparing their injury rates with other similar systems (e.g., their three man rear-end loader crews had the second highest OSHA incidence rate of that type of crew)
- comparing their injury rates with other types of systems (e.g., two man hourly collection crews were lower in injury rates than two man task)
- comparing their accident patterns with other similar and dissimilar systems (e.g., their slips and falls from the vehicle steps were twice as high as an organization that installed open mesh, lower steps)
- monitoring countermeasures implemented (e.g., whether the user's incidence of slips and falls on ice decreased with issuing "ice creepers").

Specific prevention methods proven to be effective at other solid waste agencies, or proven by IRIS data to be lower in injury rates, are suggested for management to consider. The cost effectiveness of the suggested prevention methods for the user are also outlined. Therefore, the solid waste managers are not only made aware of the seriousness of their injury problems but also how best to correct them.

Another improvement to the QSMR in order to maintain user interest was in altering the comparative injury rates section from quarter to quarter. With the development of a wide range of computer programs, the injury rates for the IRIS users could be compared by means of a variety of factors. Some of the factors included:

- age of employee
- experience of employee
- division (e.g., landfill, street cleaning)
- crew size
- crew type (e.g., brush collection, residential collection)
- type of shift (e.g., task, fixed hour)
- point of collection (e.g., curbside, backyard with tub)
- two factor collection crew type (e.g., two man brush collection, three man backyard collection, residential task collection)
- five factor collection crew type (e.g., two man residential curbside manual collection task crew)
- standard job classification (e.g., collector non-driver)
- equipment type (e.g., front-end loader).

To compare the injury rates of the users with <u>only similar users</u> is necessary for a meaningful comparison, since to compare simply the overall injury rates for the users can mean that a user that is only reporting collection crew injuries is being compared to a user that reports collection, disposal and administration injuries. Therefore, the first user would appear much worse in injury rates since they only included their high risk division.

IV. IRIS NEWSFLASH

The IRIS Newflash was conceived in January 1977 when IRIS received two very serious accidents from users. It was decided that the IRIS users should be aware of the potential dangers immediately, rather than in the Accident Trends. The IRIS Newsflash also serves the purpose of describing alarming trends noted in the accidents. Accidents highlighted are either severe accidents or near-serious accidents which the IRIS injury reviewer has noted. The IRIS Newsflash is published when needed, but at least four times annually.

Topics and accidents discussed in the four IRIS Newsflashes published within the injury reporting period included:

- "riding on the step while backing" and "opening tailgate" near-fatal accidents (EXHIBIT 11)
- accidents while "packing on the run" (EXHIBIT 12)
- exploding bomb in the waste (EXHIBIT 13)
- caught in packer accidents while catching waste and while operating the packer wrongly (EXHIBIT 14)

The IRIS Newsflash was very well received, and one use that the IRIS users have made of the IRIS Newsflash was to reproduce them for the collection foremen (or supervisors) to present at their weekly safety "tailgate sessions".

V. MONTHLY IRIS NEWS

The IRIS News is a monthly newsletter first introduced in April 1977. It was also not specified in the contract but was deemed necessary to cover solid waste safety topics that the Accident Trends reports and five Special Reports would not have enough issues to cover. The safety topics addressed are short and are presented in newsletter fashion. The IRIS News is also used to present articles on news of interest to the industry (e.g., National Safety Council, ANSI Z245.1-1975 standard, etc.), which was originally part of the Accident Trends report. It also includes a calendar of events, announcing upcoming solid waste conferences and seminars. Another purpose the IRIS News serves is to maintain the users' interest on a more timely basis, since both the QSMR's and Accident Trends reports are quarterly. The two annual IRIS injury statistics (December 1975 through September 1977) are also incorporated in two issues of the IRIS News, rather than in the Accident Trends report.

Topics that have been presented in the IRIS News include:

- equipment modifications (EXHIBIT 15)
- the development of solid waste safety manual by SAFETY SCIENCES for the National Science Foundation (EXHIBIT 16)

- charts "evaluating equipment modifications and the ANSI Z245.1-1975 standard" and a "task/hazards analysis of overexertions accidents", relating both to IRIS data (EXHIBIT 17)
- presenting injury rates for task vs. hourly collection and a bibliography of solid waste safety literature (EXHIBIT 18)
- 1976 annual IRIS injury rates and the National Safety Council (EXHIBIT 19)
- a discussion of safety incentive programs (EXHIBIT 20)

The IRIS News was very well received, and the major comment on it was that its brevity made it easily digestible. With the introduction of the IRIS News, the quarterly Accident Trends reports may no longer be necessary. The three sections of the Accident Trends report of the narrative which covers a special topic, the injury statistics for the quarter, and the safety news of the industry can and have been incorporated into the IRIS News. In addition, as the number of IRIS users decreased after the end of full EPA funding, the quarterly data of the users become less useful because of the small sample size.

A number of safety topics and/or IRIS data findings can be discussed in each issue of the IRIS News, which ranges in length from three to fifteen pages. As discussed in Section 3.1.1 of the Final Report, virtually an unlimited number of data analyses still requires examination, and the IRIS News can be used as a vehicle to announce the findings to its users, to EPA and to the industry.

VI. SPECIAL REPORTS

It was felt that the limited number of issues of the Accident Trends report (8) would not allow for enough issues to cover all of the safety questions of interest to EPA, the solid waste management industry, or to the IRIS users. Therefore, an additional five special reports was agreed upon for addressing industry safety problems in depth. The safety issues touched upon in the IRIS News, Accident Trends report and IRIS Newsflash would point out additional areas for examination (e.g., the container handling accidents issue of the Accident Trends report indicated that follow up was necessary for the overexertion accidents, in particular back strains, to determine the influence of the employee characteristics of age and experience).

As the injury data base expanded to over 11,000 injuries (counting Field Test injuries and first aid injuries) and close to 40 million man-hours of exposure, detailed operational system changes at the solid waste agencies (e.g., collection crew types) could be examined.

The five special report topics chosen by OSWMP as being of deep interest and needed by the solid waste industry were:

- The use of personal protective equipment and its effect on accident reduction (EXHIBIT 21),

- The occurrence of back strains (overexertions) in relation to the age and experience of the employee (EXHIBIT 22),

- How three crew type variations, size, type of shift, and point of collection, affect injury rates (EXHIBIT 23),

- How differences in worker's compensation policies and wage continuation benefits affect the incidence of injuries (EXHIBIT 24), and

- The relationship of injury rates to the type of equipment used (e.g., rear-end loader, side loader, etc.) (EXHIBIT 25).

(Note: The write-up of the Special Reports included in this Publications volume is in draft form, and subject to revision upon OSWMP reviewing their contents.)

Accident Trends
4th Quarter 1975

IRIS

EXHIBIT 1

ACCIDENT TRENDS

IN THE SOLID WASTE MANAGEMENT INDUSTRY

PARTIAL QUARTER: DECEMBER 1 TO 31, 1975

DEVELOPED BY SAFETY SCIENCES, DIVISION OF WSA, INC.
FOR THE U.S. ENVIRONMENTAL PROTECTION AGENCY
OFFICE OF SOLID WASTE MANAGEMENT PROGRAMS
UNDER CONTRACT NO. 68-03-0231

safety sciences Division of WSA Inc., 11772 Sorrento Valley Road
San Diego, CA 92121 (714) 755-9359 & 452-1010

ACCIDENT TRENDS in the Solid Waste Management Industry is developed quarterly using data from IRIS (the Injury Reporting and Information System for Solid Waste Management). ACCIDENT TRENDS is designed to summarize and discuss the data from all IRIS users and to provide data and conclusions which affect the industry as a whole. A companion volume, the QSMR, (Quarterly Safety Management Report) is developed individually for each IRIS user who reported injuries during the quarter. Each QSMR concentrates only on the injuries of the individual IRIS user for which it is prepared.

ACCIDENT TRENDS

IN THE SOLID WASTE MANAGEMENT INDUSTRY

PARTIAL QUARTER: DECEMBER 1ST TO 31ST, 1975

TABLE OF CONTENTS

		Page
INTRODUCTION		
I.	Section I - DISCUSSION OF ACCIDENT CHARACTERISTICS AND PREVENTION METHODS	3
II.	Section II - SUMMARY OF IRIS USER INDUSTRY-WIDE DATA	9
	Part I - Frequency, Severity, Costs	9
	How to read FIGURE 3	9
	How to read FIGURE 3 - 6	10
	Part II - Characteristics of Accidents	14
III.	Section III - SAFETY NEWS	30

LIST OF FIGURES AND TABLES

		Page
TABLE A:	Summary of Injuries by Frequency, Severity and Costs	12
TABLE B:	Summary of Accidents by Characteristic - Characteristics with Highest Percent of OSHA Recordable Injuries, Workdays Lost, and Direct Costs	15
FIGURE 1:	Description of Users by Operational Characteristics	2
FIGURE 2:	Profile of Accidents by Accident Type, Activity, Part of Body and Injury Type	7
FIGURE 3:	Number of Injuries Reported by Type of Severity - Comparison of 'IRIS' Users	16
FIGURE 4:	Average Injury Rates by 'IRIS' Users Ranked from Highest to Lowest	17
FIGURE 5:	Average Workdays Lost Per Lost Workday Case by 'IRIS' Users Ranked from Highest to Lowest	18
FIGURE 6:	Direct Costs by 'IRIS' Users Ranked from Highest to Lowest	19
FIGURE 7:	Accident Types Ranked from Highest to Lowest Percent of OSHA Recordable Injuries, Workdays Lost, and Direct Costs	20
FIGURE 8A-C:	Injury Types Ranked from Highest to Lowest Percent of OSHA Recordable Injuries, Workdays Lost and Direct Costs	21
FIGURE 9:	Parts of Body Injured Ranked from Highest to Lowest Percent of OSHA Recordable Injuries, Workdays Lost, and Direct Costs	24
FIGURE 10:	Activities Ranked from Highest to Lowest Percent of OSHA Recordable Injuries, Workdays Lost, and Direct Costs	25
FIGURE 11A-C:	Accident Sites Ranked from Highest to Lowest Percent of OSHA Recordable Injuries, Workdays Lost, and Direct Costs	26

		Page
FIGURE 12:	Types of Waste Involved Ranked from Highest to Lowest Percent of OSHA Recordable Injuries, Workdays Lost, and Direct Costs	29

INTRODUCTION

This is the ACCIDENT TRENDS in the Solid Waste Management Industry report for the partial quarter ending December 31, 1975. Before reading the results the following points should be noted:

- This is the first ACCIDENT TRENDS report developed under the IRIS program and it covers only a partial quarter, namely the month of December, 1975. For these reasons this ACCIDENT TRENDS report may not be typical of those in the future. Because of the "short" quarter, there are too few injuries reported to allow for much evaluation. Because this is the first ACCIDENT TRENDS report, there is no previous history from which to report "trends". During the month of December there were only 11 IRIS users, nine of which reported a total of 58 injuries. At the present there are 41 IRIS users, and the number continues to grow. Finally, as this is our first ACCIDENT TRENDS report there may be areas needing improvement. IRIS welcomes your comments.

- All IRIS users are identified only by number. A table giving background information on the operational characteristics of the IRIS users by their number is shown in FIGURE 1.

- The phrase "AVERAGE" refers to the injury rates or numbers for all IRIS users combined.

- The FIGURES include the injury, time lost and cost data that was provided to IRIS by January 31, 1976, the "closing date" of this quarter. Some of the time lost and cost data, therefore, include "open" cases for which data is not final.

This ACCIDENT TRENDS report is divided into three sections. SECTION I provides a discussion of the accidents and prevention methods found during this quarter. SECTION II summarizes the data received for all IRIS users during the quarter. SECTION III reviews some of the safety news of the solid waste management industry.

DESCRIPTION OF USERS BY OPERATIONAL CHARACTERISTICS

User Number	Municipal=M Private=P	Geographical Area	Number of Employees	M=Mechanical A=Alley BY=Backyard CS=Curbside I=Int.Cont. W=Wheeled	Type of Shift	Type of Service Provided		
						Coll. Crew Size(s)		Disposal L=Landfill I=Incinerator T=Trans, Stn.
						Comm.	Resid.	
101	M	South	325	A-BY-C	Task/ Fixed	4	4	L
111	M	Pacific	275	CS	Task	-	-	L
109	M	Midwest	600	M-I-W	Fixed	4	4	-
261	M	Midwest	<25	A-CS	Task	-	3	L
212	M	Pacific	100	CS-A	Fixed	2	2	-
210	M	Pacific	<25	A-CS	Task	2	1	L-T
211	M	Pacific	50	A-CS	Fixed	2	2	L
207	M	Pacific	200	BY-I-W	Task	3	3	-
161	M	Midwest	125	CS-A	Task	3	3	L
136	M	South	150	A-CS-I-W	Fixed	3	3	L
236	M	South	100	CS	Task	3	3	L

FIGURE 1

SECTION I

DISCUSSION OF ACCIDENT CHARACTERISTICS AND PREVENTION METHODS

As mentioned in the Introduction, this is the first ACCIDENT TRENDS report, and it covers a "short" quarter. For this reason, there are too few accidents to discuss or evaluate the accidents in much detail. A few comments may be useful, however.

FIGURE 2 shows profiles of the injuries for all IRIS users reported during this short quarter. Each of these profiles gives, in the form of a sentence, the accident type, activity, part of body, and injury type involved in each accident, and shows the associated number of OSHA recordable injuries, work-days lost and direct costs.

Thirteen of the 58 injuries occurred while the employee was dumping a container or waste into the hopper. Dumping into hopper was the most frequent activity associated with injuries (28%), resulting in the greatest number of days lost (30%), and in the second highest direct costs (21%). Although many people feel that the most common overexertion injury in the solid waste industry is associated with lifting, FIGURE 2 shows that most of the overexertion injuries were associated with dumping a container or waste into the hopper. While there are several types of injuries associated with dumping into hopper the most frequent is the strain to the back or shoulder. Several IRIS users emphasized that these accidents occur when the employee is turning or twisting at the same moment he is dumping. In one accident, the employee was said to be "turning at a 90° angle." Two other users emphasized the problem of employees tending to lift the container "high into the air" when dumping the container (presumably in order to let the refuse fall out easier) resulting in increased strain to the back. Much attention during training has been put on teaching employees how to lift, but very little has been done concerning good dumping procedure. From the comments of IRIS users, it appears that this training should emphasize making a deliberate turn, before dumping the container and holding the container down close to body when dumping. It is likely that the turn/twist tendency while dumping is greatest in curbside pickup, because of the location of the containers, so that special emphasis should be put on this dumping error in curbside collection systems.

Dumping containers into the hopper is also associated with being struck by objects flung back from the hopper. Holding the container high in the air probably increases the chances of this type of accident because the refuse hits the hopper with greater impact. For example, one employee was pulling the refuse out of a container held high in the air when a juice bottle fell against the hopper, broke and lacerated the wrist. (At least one IRIS user has a work practice forbidding, and prescribing penalties for using hands to pull refuse out of the container.) One injury was due to an employee being struck in the mouth by a can that was ejected from the hopper. In this case the employee was dumping a container while the hopper was operating, which is a questionable practice. One IRIS user has trained employees to operate the packing mechanism by pressing the start button with their left hand. This procedure almost automatically forces the employee operating the mechanism to stand at the side of the truck rather than at the back of the hopper and to turn his head when the packer is operating, thus reducing the chance of being struck by refuse ejected from the hopper.

Falls from the step were the second most frequent type of accident. One injury of this type involved an employee who ran to catch up to and jump on the step of a packer that was backing up, slipped and fractured his leg. Although this particular injury is unusually serious, the accident type is very common. Falls from the step amounted to approximately 19% of the total number of injuries, 30% of the workdays lost, and 16% of the costs for all IRIS users during the month of December, 1975. Moreover, falls while getting on the step, are just as frequent as those while getting off. (See FIGURE 12.) Falls from the step while getting on the step are usually due to trying to mount a moving vehicle. Falls from the step while getting off, are mostly due to unusual surfaces. For example, one employee fell when he stepped on grease as he got off the step, another fell "into a hole" as he got off. This information suggests that injuries while getting on the step may be easier to prevent. Usually the falls from the step result in sprains to the ankle, rather than fractured legs. Employees should be cautioned to get on and off the step only when it is stopped, and to "let it go" rather than try to run for a quickly moving vehicle. In several cases, the injured employee was said to be "reaching up" as he tried to get on the step and fell. Presumably the employee was attempting to "reach up" for the grab handle. Reaching up usually means "looking up," which of course makes it hard for an employee to watch his footing. Placement of the grab handle should be reevaluated. Perhaps a long, verticle bar which the employee could grab at any point could be a solution.

One IRIS user has developed a step modification and special training programs for getting on and off the step which emphasize a body position that allows the employee to see what he is stepping onto. If you would like more information about this IRIS user's program, phone the IRIS Central Office.

One fall from the step injury occurred while an employee was washing snow off the windshield; the employee fractured his ankle. Another injury, bruised thumb, also occurred when an employee was washing a windshield. Employees should be cautioned about the hazards of this seemingly innocuous activity.

Of the 58 injuries, 5 occurred at the landfill and all of these were nearly of the same type. In each case the injury was a result of trouble in opening and closing the tailgate at the back of the packer as a part of emptying the packer at the landfill. In 4 of these cases the employees were struck by the tailgate. The fifth case was a result of overexertion in trying to close the tailgate in which the employee fractured his wrist. Three of these injuries occurred in one accident in which the landfill tractor operator unlatched the door, the door swung shut hitting the blade that was still out, bounced back and struck three employees, one very severely (fractured skull). This type of accident is usually due to the excess pressure put on the tailgate by leaving the blade within the packer packed tightly against the refuse while opening the tailgate. If employees could be trained to release this pressure of the blade until after the tailgate has been opened, this type of accident might be avoided. A standard work practice of no more than one employee behind the tailgate when it is being opened is also recommended.

One injury resulted in cuts to the leg from glass protruding from a plastic bag being carried by the employee. IRIS data indicates that this is the most common type of accident on "bag routes." Some cities have employed special "chaps" or extra heavy trousers to avoid this problem.

A more serious injury occurred when an employee was rolling a 2 yard container to behind the packer to prepare for emptying it, and the wheel of the container rolled onto his right foot. This accident appears likely to result in permanent disability at this time. Five accidents of this type have occurred to other IRIS users who work with bulk containers. In one case an employee smashed his thumb while trying to return a bulk container to its enclosure. Two back strains occurred while pulling a bulk container. In another,

the employee strained his back while trying to get a bulk container back up onto its concrete platform (slab). Normally these accidents result when there is a change in surface level (e.g., going over a curb, or coming off their platform). Training concerning mapping out the path of the bulk containers before pushing them, as well as alerting employees to the hazards of changes in level may be helpful.

All together, bulk containers were implicated in eight of the 58 injuries. In two cases the bulk containers slipped while they were being automatically dumped; one employee was struck by the barbell used to attach the bulk container; the second injury resulted in catching an employee's hand between the truck and the bulk container. The eighth bulk container injury occurred when an employee chose to ride on the lip of a bulk container which was being held by a moving front-end loader. The lip broke and the employee fell. Fortunately, the employee fell to the side of the truck, so that the driver was able to stop the truck before it ran over the employee, thus only "accidentally" avoiding a very serious, possibly fatal accident.

One injury involved an employee who dropped a can on himself as a result of a dog charging out from behind a building. Dropping an object, usually the container, on oneself is also a frequent accident, amounting to 9% of the injuries, 17% of the workdays lost and 9% of the direct costs for all users this quarter. Another employee struck his side against the truck as a result of being startled by rats jumping out of the hopper. Being startled by dogs and other animals is a common occurrence in out-of-doors jobs.

One injury occurred while dumping a water heater into the hopper. The employee was being assisted by the driver at the time. Perhaps, special training concerning lifting and dumping material with another employee should be considered, as frequently it is the poor coordination between two employees while lifting that results in strains. Poor coordination with the driver while getting on the step may have been the problem in several of the falls from the step, also. A third type of poor coordination problem occurred when an injured employee was struck by a wheeled container being dumped by another employee.

One employee received a chemical burn after shoveling the refuse back into a packer. The refuse had been dumped because the packer had caught fire. It is believed that the chemical used to put out the fire was the irritating agent.

FIGURE 2

ALL USERS
PROFILE OF ACCIDENTS
BY ACCIDENT TYPE, ACTIVITY
PART OF BODY AND INJURY TYPE

REPORTING PERIOD: DECEMBER 1975

INSTRUCTIONS: EXAMINE THIS DATA TO DETERMINE THE CHARACTERISTICS OF YOUR ORGANIZATION'S ACCIDENTS.
THIS PROFILE IS A FORMATTED SENTENCE CONSISTING OF ACCIDENT TYPE, ACTIVITY, PART OF BODY INJURED AND NATURE OF INJURY.

PROFILE	OSHA REC INJ	WKDYS LOST	DIRECT COSTS
STRUCK BY VEHICLE PART WHILE DUMPING CONTAINER INTO HOPPER INJURING SHOULDER RESULTING IN BRUISE/CONTUSION/CRUSHING	1	17	462
STRUCK BY VEHICLE PART WHILE STANDING/WALKING INJURING SKULL RESULTING IN BRUISE/CONTUSION/CRUSHING	1	0	0
STRUCK BY VEHICLE PART WHILE GETTING OUT OF CAB INJURING TRUNK RESULTING IN BRUISE/CONTUSION/CRUSHING	1	0	25
STRUCK BY VEHICLE PART WHILE STANDING/WALKING INJURING SHOULDER RESULTING IN BRUISE/CONTUSION/CRUSHING	1	5	199
STRUCK BY VEHICLE PART WHILE STANDING/WALKING INJURING ARM RESULTING IN BRUISE/CONTUSION/CRUSHING	1	0	75
STRUCK BY VEHICLE PART WHILE EMPTYING VEHICLE/PACKER INJURING THUMB RESULTING IN BRUISE/CONTUSION/CRUSHING	1	0	54
STRUCK AGAINST VEHICLE WHILE WASHING EQUIP INJURING FINGERS RESULTING IN BRUISE/CONTUSION/CRUSHING	1	0	5
STRUCK AGAINST VEHICLE WHILE DUMPING CONTAINER INTO HOPPER INJURING HAND RESULTING IN BRUISE/CONTUSION/CRUSHING	1	4	328
STRUCK BY OBJECT WHILE DUMPING CONTAINER INTO HOPPER INJURING HAND RESULTING IN BRUISE/CONTUSION/CRUSHING	1	0	36
STRUCK BY OBJECT WHILE DUMPING CONTAINER INTO HOPPER INJURING MOUTH/LIP/TEETH RESULTING IN CUT/LACERATION/PUNCTURE	1	0	5
STRUCK BY OBJECT WHILE STANDING/WALKING INJURING ARM RESULTING IN BRUISE/CONTUSION/CRUSHING	1	0	32
STRUCK BY OBJECT WHILE CARRYING CONTAINER INJURING EYES RESULTING IN SCRATCHES/ABRASIONS	1	1	42
STRUCK BY OBJECT WHILE PUSHING/PULLING CONTAINER INJURING FOOT RESULTING IN BRUISE/CONTUSION/CRUSHING	1	18	7,738
STRUCK BY OBJECT WHILE PUSHING/PULLING WASTE IN/OUT CONTAINER INJURING WRIST RESULTING IN CUT/LACERATION/PUNCTURE	1	0	0
OBJECT IN EYES WHILE DUMPING UNCONTAINERIZED WASTE INTO HOPPER INJURING EYES RESULTING IN OBJ IN EYE	1	2	66
OBJECT IN EYES WHILE DUMPING CONTAINER INTO HOPPER INJURING EYES RESULTING IN OBJ IN EYE	1	0	45
HURT BY OBJECT HANDLED WHILE CARRYING CONTAINER INJURING LEG RESULTING IN CUT/LACERATION/PUNCTURE	1	0	60
HURT BY OBJECT HANDLED WHILE PUSHING/PULLING CONTAINER INJURING THUMB RESULTING IN BRUISE/CONTUSION/CRUSHING	1	0	68
HURT BY OBJECT HANDLED WHILE DUMPING CONTAINER INTO HOPPER INJURING FINGERS RESULTING IN CUT/LACERATION/PUNCTURE	1	0	50
HURT BY OBJECT HANDLED WHILE LIFTING UNCONTAINERIZED WASTE INJURING EYES RESULTING IN SCRATCHES/ABRASIONS	1	0	5
FALL TO DIFFERENT LEVEL WHILE GETTING OUT OF CAB INJURING FOOT RESULTING IN SPRAIN/STRAIN	1	0	58
FALL FROM STEP WHILE GETTING ON STEP INJURING BACK RESULTING IN SPRAIN/STRAIN	3	12	312
FALL FROM STEP WHILE CLEARING INJURING ANKLE RESULTING IN FRACTURE	1	12	504
FALL FROM STEP WHILE GETTING OFF STEP INJURING HIPS RESULTING IN SPRAIN/STRAIN	1	1	106
FALL FROM STEP WHILE GETTING ON STEP INJURING KNEE RESULTING IN BRUISE/CONTUSION/CRUSHING	1	0	5
FALL TO SAME LEVEL WHILE PUSHING/PULLING CONTAINER INJURING CHEST/RIBS RESULTING IN BRUISE/CONTUSION/CRUSHING	1	25	1,103
FALL FROM STEP WHILE RIDING ON STEP INJURING ELBOW RESULTING IN BRUISE/CONTUSION/CRUSHING	1	0	0
FALL FROM STEP WHILE GETTING ON STEP INJURING LEG RESULTING IN FRACTURE	1	35	867
FALL FROM STEP WHILE GETTING OFF STEP INJURING ANKLE RESULTING IN SPRAIN/STRAIN	1	10	253
FALL TO SAME LEVEL WHILE CARRYING CONTAINER INJURING KNEE RESULTING IN BRUISE/CONTUSION/CRUSHING	1	0	0
FALL TO SAME LEVEL WHILE PUSHING/PULLING CONTAINER INJURING BACK RESULTING IN BRUISE/CONTUSION/CRUSHING	1	2	56

FIGURE 2 CONTINUED

PROFILE	OSHA REC INJ	WKDYS LOST	DIRECT COSTS
FALL TO SAME LEVEL WHILE PUSHING/PULLING OTHER RESULTING IN SPRAIN/STRAIN	1	0	0
FALL TO SAME LEVEL WHILE CARRYING CONTAINER INJURING SHOULDER RESULTING IN BRUISE/CONTUSION/CRUSHING	1	20	840
OVEREXERTION WHILE DUMPING CONTAINER INTO HOPPER INJURING GENITALIA/GROIN RESULTING IN SPRAIN/STRAIN	2	4	168
OVEREXERTION WHILE LIFTING CONTAINER INJURING BACK RESULTING IN SPRAIN/STRAIN	3	0	15
OVEREXERTION WHILE PUSHING/PULLING CONTAINER INJURING BACK RESULTING IN SPRAIN/STRAIN	1	2	200
OVEREXERTION WHILE DUMPING CONTAINER INTO HOPPER INJURING TRUNK RESULTING IN SPRAIN/STRAIN	1	11	559
OVEREXERTION WHILE DUMPING CONTAINER INTO HOPPER INJURING HIPS RESULTING IN SPRAIN/STRAIN	1	3	213
OVEREXERTION WHILE DUMPING CONTAINER INTO HOPPER INJURING BACK RESULTING IN SPRAIN/STRAIN	1	5	377
OVEREXERTION WHILE PUSHING/PULLING CONTAINER INJURING GENITALIA/GROIN RESULTING IN SPRAIN/STRAIN	1	4	151
OVEREXERTION WHILE LIFTING CONTAINER INJURING BUTTOCKS RESULTING IN SPRAIN/STRAIN	1	1	42
OVEREXERTION WHILE DUMPING UNCONTAINERIZED WASTE INTO HOPPER INJURING BACK RESULTING IN SPRAIN/STRAIN	1	33	1,043
OVEREXERTION WHILE PUSHING/PULLING OTHER INJURING GENITALIA/GROIN RESULTING IN SPRAIN/STRAIN	1	1	42
OVEREXERTION WHILE EMPTYING VEHICLE/PACKER INJURING WRIST RESULTING IN FRACTURE	1	5	188
OVEREXERTION WHILE DUMPING CONTAINER INTO HOPPER INJURING ARM RESULTING IN SPRAIN/STRAIN	1	5	244
CONTACT WITH CAUSTIC/TOXIC/NOXIOUS SUBSTANCE WHILE USING HAND TOOLS INJURING CHEST/RIBS RESULTING IN DERMITITIS/RASH	1	0	32
STEP ON SHARP OBJECT WHILE CLEARING INJURING FOOT RESULTING IN CUT/LACERATION/PUNCTURE	1	3	104
STEP ON SHARP OBJECT WHILE DUMPING UNCONTAINERIZED WASTE INTO HOPPER INJURING FOOT RESULTING IN CUT/LACERATION/PUNCTURE	1	0	81
DROPPED OBJECT ON SELF WHILE CARRYING CONTAINER INJURING KNEE RESULTING IN BRUISE/CONTUSION/CRUSHING	1	8	336
DROPPED OBJECT ON SELF WHILE CARRYING OTHER INJURING FOOT RESULTING IN BRUISE/CONTUSION/CRUSHING	1	0	5
DROPPED OBJECT ON SELF WHILE CARRYING CONTAINER INJURING TOES RESULTING IN BRUISE/CONTUSION/CRUSHING	1	24	367
DROPPED OBJECT ON SELF WHILE PUSHING/PULLING CONTAINER INJURING FOOT RESULTING IN BRUISE/CONTUSION/CRUSHING	1	20	928
STRUCK BY VEHICLE WHILE DUMPING CONTAINER INTO HOPPER INJURING FOOT RESULTING IN FRACTURE	1	3	203

SECTION II

SUMMARY OF IRIS USER INDUSTRY WIDE DATA

This section provides a summary of the IRIS data as it applies to all users, and as it relates to industry wide trends. It is divided into 2 parts. Part I reviews the frequency, severity and costs of injuries to the industry. Part II summarizes the characteristics of the injuries occurring in the industry. It is important to remember the limitations of this data both in terms of the number of injuries involved (58) and the representativeness of the IRIS users from which the data came. (see FIGURE 1).

PART I - FREQUENCY, SEVERITY, COSTS

FIGURES 3 through 6 summarize the frequency, severity and costs of injuries reported during this quarter.

How to Read FIGURE 3

FIGURE 3 provides a recap for the quarter. This FIGURE lists, in order of user number, the number of injuries reported by each IRIS user and categorizes these injuries by their severity level (i.e., first aid through death). For each severity level the percentage of the total injuries reported is shown. For example, if a percentage of 28% is shown for the "first aid" severity level, this means that 28% of all the injuries reported were classified as first aid. The purpose of this FIGURE is to recap the severity of injuries by user, so as to make it possible to compare users by the percent of injuries at certain severity levels. To do this, you should:

(1) read across the page to identify the total number of injuries reported this quarter and the number and percent of these injuries classified at various severity levels.

(2) compare the percent of each IRIS user's injuries at various severity levels with those of the "AVERAGE" and with those of other IRIS users.

Obviously the goal is to have a greater percentage of injuries at the low severity levels. Therefore, a user is doing "better" than other IRIS users to the extent that

- the percent of its injuries at the low severity levels (i.e., first aid cases and non-fatal cases without lost workdays) is greater than this percent for the other IRIS users; or, conversely,

- the percent of its injuries at the high severity levels (i.e., lost time, permanent disability, and death cases) is lower than this percent for other IRIS users.

Moreover a high percentage of first aid cases reported suggests that a user is probably reporting most of its injuries. This is because it is the less severe injuries that are the least likely to be reported, and if these are being reported at by a user then it is likely that most of the other injuries are being reported.

How to Read FIGURES 4-6

FIGURES 4 through 6 compare users and provide AVERAGES for injury frequency, severity and costs. In all of these FIGURES the comparison is done by ranking IRIS user's in order of highest to lowest injury rates. To use these FIGURES you should:

(1) identify the type of rate and type of comparison being made. "OSHA incidence rates" (both overall, and rates for lost workday -LWD- cases) are measures of the frequency of injuries. The "OSHA severity rate," and the "average workdays lost per lost workday case" are measures of the severity of injuries. The "average direct cost per OSHA recordable injury" and the "average cost per man-year" are measures of the costliness of injuries.

(2) look for an IRIS user or the AVERAGE and read across the page to identify the rates. FIGURES having more than one type of rate may have the AVERAGE or a given IRIS user on a different row for each type of rate, because IRIS users are listed in order of highest to lowest rates.

(3) determine how each user stands compared with other IRIS users and the AVERAGE. To do this you can:

- check to see on which row a user is listed for a given type of rate. The row on which a user is listed is the user's rank compared with other users. For example, the user listed first, ranks as having the highest injury rate; the organization listed 3rd has the third highest rate, etc.

- check to see whether a user is listed above the AVERAGE rate (meaning it has a rate that is higher than the AVERAGE) or below the AVERAGE rate (meaning that it is lower than the AVERAGE).

- the best way to evaluate a user's standing is by checking its AVERAGE RATIO for a given rate. The average ratio (equal to a user's rate divided by the AVERAGE rate) tells you how much higher or lower than the AVERAGE the user's rates are. For example, an average ratio of 3.50 would mean that the user is 3½ times the AVERAGE; an average ratio of .33 would mean that the user is one-third the AVERAGE. An average ratio of about 1.25 (25% above the AVERAGE) is normally considered to be "poor", while an average ratio of below .50 is considered "good". Average ratios between .05 and 1.25 are considered average for the solid waste management industry, as shown by IRIS data. It should be remembered, however, that because of the very high injury rate for the solid waste management industry as a whole, a "good" or "average" injury rate compared to the industry may still be a comparatively high rate.

FIGURE 4 lists three columns of data by user in order of highest to lowest rates: the OSHA incidence rate for all OSHA recordable injuries, the OSHA incidence rate for lost workday cases, and the OSHA severity rate. The meaning of the rates are explained on the FIGURE.

FIGURE 5 lists the number of cases involving lost workdays and the average lost workdays per lost workday case by user in order of highest to lowest average workdays lost per lost workday case.

FIGURE 6 lists the average direct cost per OSHA recordable injury by user in order of highest to lowest average cost, and the average cost per man-year (i.e., per 1 full time employee per year) by user in order of highest to lowest rates.

TABLE A summarizes the data from FIGURES 3-6.

In reviewing these FIGURES, the data for the AVERAGE (shown on the FIGURES as AVG) is the most important because it summarizes the results for all users combined. After examining the AVERAGES, it is important to examine how great the range of rates between users is. Wide ranges are important because they show that it is possible to achieve lower rates of injury under given operating systems and safety programs.

TABLE A

SUMMARY OF INJURIES

BY FREQUENCY, SEVERITY AND COSTS

FREQUENCY

- There were 58 cases reported by 9 of the 11 IRIS users.
- The AVERAGE OSHA incidence rate is 34. This means that on the average each 100 employees has 34 injuries a year, or that one out of every 3 employees are injured. The national OSHA incidence rate for all industries is 10.4, making the solid waste industry 3 times the average of industry.
- IRIS users range in frequency from User No. 211, which is experiencing 1.6 injuries per employee per year to User No. 111 which is experiencing 1.4 injuries for every 10 employees per year.

SEVERITY

- There have been 310 days lost so far for injuries occurring during December, 1975.
- 57% of the total cases resulted in lost workdays. The national average for all industries is 33%, making the fraction of lost workday cases in the solid waste industry nearly 2 times the average industry. Two IRIS users had less than 22% lost workday cases, but the rest were higher than AVERAGE.
- The AVERAGE OSHA severity rate (number of lost workdays per 100 employees) is 224. This means that on the average each employee is losing 2.2 days per year for injuries. Three users were as high as nearly 5 days lost per year per employee; one is losing less than a day a year per employee.
- On the AVERAGE, each lost workday case is resulting in 9.39 workdays lost. This is lower than the national average for all industries, which is 10.5.
- One of the 58 injuries will probably result in permanent disability.

TABLE A
(continued)

DIRECT COSTS (Costs given are not final but represent costs known as of January 31, 1976. These costs, therefore, may greatly underestimate the actual.)

- So far the costs for injuries occurring in December, 1975 amount to $19,386.
- The AVERAGE cost per OSHA recordable injury is $407.
- The AVERAGE cost per man-year is $140. This means that on the average injuries are costing $140 per full-time employee, per year.

PART II - CHARACTERISTICS OF ACCIDENTS

FIGURES 7 through 12, summarize some of the characteristics of injuries occurring to all IRIS users during December, 1975. Each FIGURE covers a different characteristic of the accidents:

- FIGURE 7: Accident Type, e.g., falls
- FIGURE 8: Injury Type, e.g., bruise
- FIGURE 9: Part of Body Involved, e.g., leg
- FIGURE 10: Activity, e.g., carrying.
- FIGURE 11: Accident Site, e.g., back of the truck.
- FIGURE 12: Type of Waste Involved.

Each of these FIGURES is divided into 3 columns. (FIGURES 7,9,10,and 12 have all three columns on one page. FIGURES 8 and 11 show the columns on 3 separate pages marked A,B, and C respectively.) The first column lists the number and percent of OSHA recordable injuries by characteristic of the accident in order of highest to lowest percent. The second column lists the number and percent of workdays lost (and average workdays lost) by characteristic in order of highest to lowest percent of workdays lost. The third column lists the amount and percent of direct costs (and average direct costs) by characteristic in order of highest to lowest percent of direct costs. Thus a given characteristic may be in different rows depending on the percent of injuries, workdays lost and direct costs associated with that characteristic. For example in FIGURE 7, "Falls from the Step" amount to the second highest percent of the injuries (19%), the highest percent of workdays lost (30%) and the third highest percent of direct costs (16%), and therefore Falls From the Step are shown in the second row of the first column, first row of the second column and the third row of the third column.

TABLE B summarizes the data on FIGURES 6 through 11 for all IRIS users.

TABLE B

SUMMARY OF ACCIDENTS BY CHARACTERISTIC

Characteristics with Highest Percent of OSHA Recordable Injuries, Workdays Lost & Direct Costs

TYPE OF CHARACTERISTIC	CHARACTERISTICS WITH THE: HIGHEST % OF OSHA RECORDABLE INJURIES	HIGHEST % OF WORKDAYS LOST	HIGHEST % OF DIRECT COSTS
Accident Type	Overexertion - 28% Fall from Step - 19% Struck by Veh. Part - 11%	Fall from Step - 30% Overexertion - 30% Dropped Object on Self - 17%	Struck by Object - 40% Overexertion - 20% Fall from Step - 16%
Injury Type	Sprain/Strain - 40% Bruise/Contusion/ Crushing - 34%	Bruise/Contusion/ Crushing - 46% Sprain/Strain - 34%	Bruise/Contusion/ Crushing - 65% Sprain/Strain - 23%
Part of Body Involved	Back - 17% Foot - 15%	Back - 20% Foot - 15%	Foot - 48% Back - 13%
Activity	Dumping Into Hopper - 28% Pushing/Pulling Cart - 15%	Dumping Into Hopper - 30% Pushing/Pulling Cart - 23%	Pushing/Pulling Cart - 54% Dumping Into Hopper - 21%
Accident Site	In/On Vehicle - 15%	Street at Back of Truck - 17%	Mid Alley - 46%
Type of Waste Involved	Glass - 9%	Furniture/Appliances - 11%	Furniture/Appliances - 5%

FIGURE 3

NUMBER OF INJURIES REPORTED BY TYPE OF SEVERITY
COMPARISON OF 'IRIS' USERS

REPORTING PERIOD: DECEMBER 1975

INSTRUCTIONS: THE PERCENTAGES ARE A FRACTION OF THE TOTAL CASES REPORTED. THEY TOTAL TO APPROXIMATELY 100% IF READ HORIZONTALLY. COMPARE YOUR ORGANIZATION'S PERCENTAGES WITH THE AVERAGE AND WITH OTHER IRIS USERS. HIGHER THAN AVERAGE PERCENTAGES IN THE LOWER SEVERITY GROUPS, I.E., TOWARD THE LEFT, ARE DESIRED, AS ARE LOWER THAN AVERAGE PERCENTAGES TOWARD THE RIGHT.

IRIS USER NO.	TOTAL CASES RPT'D	FIRST AID		NON-FATAL W/O LST WKDAY		LOST WKDY CASES		PERM DISAB		FATALITY	
		NO.	%	NO.	%	NO.	%	NO.	%	NO.	%
AVG	58	11	19	13	22	33	57	1	1.72	0	0.00
101	7	0	0	2	29	5	71	0	0.00	0	0.00
109	12	1	8	2	17	9	75	0	0.00	0	0.00
111	2	0	0	0	0	2	100	0	0.00	0	0.00
136	7	1	14	1	14	5	71	0	0.00	0	0.00
161	1	0	0	0	0	1	100	0	0.00	0	0.00
207	9	2	22	2	22	5	56	0	0.00	0	0.00
211	6	0	0	3	50	3	50	0	0.00	0	0.00
212	5	0	0	3	60	1	20	1	20.00	0	0.00
236	9	7	78	0	0	2	22	0	0.00	0	0.00

FIGURE 4 PAGE 1

AVERAGE INJURY RATES BY 'IRIS' USERS
RANKED FROM HIGHEST TO LOWEST

PORTING PERIOD: DECEMBER 1975

FINITIONS: AVERAGE RATIO = RATE / AVERAGE FOR THE RATE.
HA INCIDENCE RATE = (NUMBER OF OSHA RECORDABLE CASES /
N-HOURS EXPOSURE) X 200,000.
UGHLY EQUIVALENT TO THE NUMBER OF CASES PER 100 FULL TIME EMPLOYEES
R YEAR. DOES NOT INCLUDE FIRST AID INJURIES. DOES INCLUDE MEDICAL
EATMENT, LOST TIME, PERMANENT DISABILITY AND FATALITY CASES.
HA SEVERITY RATE = (NUMBER OF WORKDAYS LOST / MAN-HOURS EXPOSURE) X 200,000.
UGHLY EQUIVALENT TO THE NUMBER OF WORKDAYS LOST PER 100 FULL TIME
PLOYEES PER YEAR.

STRUCTIONS: FIND YOUR ORGANIZATION'S USER NUMBER AND COMPARE
W IT RANKS WITH THE AVERAGE AND OTHER IRIS USERS.
GOOD STANDING IS AN AVERAGE RATIO OF LESS THAN .50.
POOR STANDING IS AN AVERAGE RATIO OF GREATER THAN 1.25.

OSHA INCIDENCE RATE				INCIDENCE RATE - LWC			OSHA SEVERITY RATE		
IS ER NO	MAN-HOURS EXPOSURE	RATE	AVG RATIO	IRIS USER NO	RATE	AVG RATIO	IRIS USER NO	RATE	AVG RATIO
211	7,391	162	4.78	211	81	3.31	161	493	2.20
207	21,181	66	1.95	207	47	1.92	136	476	2.12
212	19,905	50	1.48	136	42	1.70	207	453	2.02
136	23,967	50	1.48	236	27	1.11	212	342	1.53
AVG	276,944	34	1.00	AVG	25	1.00	211	325	1.45
236	14,625	27	0.81	212	20	0.82	111	229	1.02
101	52,468	27	0.79	109	19	0.78	AVG	224	1.00
109	94,436	23	0.69	101	19	0.78	236	137	0.61
161	14,194	14	0.42	161	14	0.57	109	136	0.61
111	28,778	14	0.41	111	14	0.57	101	65	0.29

FIGURE 5

AVERAGE WORKDAYS LOST PER LOST WORKDAY CASE
BY 'IRIS' USERS
RANKED FROM HIGHEST TO LOWEST

REPORTING PERIOD: DECEMBER 1975

INSTRUCTIONS: FIND YOUR ORGANIZATION'S USER NUMBER AND COMPARE HOW IT RANKS WITH THE AVERAGE AND OTHER IRIS USERS.
A GOOD STANDING IS AN AVERAGE RATIO OF LESS THAN .50.
A POOR STANDING IS AN AVERAGE RATIO OF GREATER THAN 1.25.

RANK	IRIS USER NO.	NO LOST WKDY CASES	AVG WKDYS LOST	AVG RATIO (DAYS / AVG)
HIGHEST	161	1	35.00	3.73
2	111	2	16.50	1.76
3	207	4	12.00	1.28
4	136	5	11.40	1.21
5	212	3	11.33	1.21
6	236	1	10.00	1.06
	AVG	33	9.39	1.00
7	109	9	7.11	0.76
8	211	3	4.00	0.43
LOWEST	101	5	3.40	0.36

DIRECT COSTS BY 'IRIS' USERS
RANKED FROM HIGHEST TO LOWEST

'PORTING PERIOD: DECEMBER 1975

'FINITIONS: DIRECT COSTS INCLUDE MEDICAL EXPENSES,
IRKMEN'S COMPENSATION BENEFITS, AND WAGE CONTINUATION BENEFITS
.G. INJURY LEAVE) ONLY. INDIRECT COSTS ARE NOT INCLUDED.
IRECT COSTS PER MAN-YEAR IS THE COST PER FULL-TIME SANITATION
IPLOYEE PER YEAR BASED ON 2,000 HOURS PER YEAR.

ISTRUCTIONS: FIND YOUR ORGANIZATION'S USER NUMBER AND COMPARE
IW IT RANKS WITH THE AVERAGE AND OTHER IRIS USERS.
GOOD STANDING IS AN AVERAGE RATIO OF LESS THAN .50.
POOR STANDING IS AN AVERAGE RATIO OF GREATER THAN 1.25.

/G DIRECT COST PER OSHA RECORDABLE INJ				DIRECT COST PER MAN YEAR			
IRIS USER NO.	NO OSHA RECORD INJ	AVG COST	AVG RATIO (AVG COST/AVG)	IRIS USER NO.	MAN-HRS EXPOSURE	COSTS PER M-Y	AVG RATIO (COSTS/AVG)
212	5	1,722	4.23	212	19,905	865	6.20
161	1	867	2.13	207	21,181	245	1.75
AVG	47	407	1.00	136	23,967	206	1.48
136	6	403	0.99	211	7,391	173	1.24
207	7	360	0.89	AVG	276,944	140	1.00
111	2	317	0.78	161	14,194	122	0.87
109	11	219	0.54	109	94,436	51	0.37
236	2	129	0.32	236	14,625	46	0.33
101	7	110	0.27	111	28,778	44	0.32
211	6	106	0.26	101	52,468	29	0.21

FIGURE 7

ALL USERS
ACCIDENT TYPES RANKED FROM HIGHEST TO LOWEST PERCENT OF
OSHA RECORDABLE INJURIES, WORKDAYS LOST AND DIRECT COSTS

REPORTING PERIOD: DECEMBER 1975

DEFINITIONS: OSHA RECORDABLE CASES INCLUDE MEDICAL TREATMENT CASES (I.E. NON-FATAL CASES WITHOUT LOST WORKDAYS), AND LOST WORKDAY, PERMANENT DISABILITY AND FATAL CASES. FIRST AID INJURIES ARE NOT INCLUDED.
DIRECT COSTS INCLUDE MEDICAL EXPENSES, WORKER'S COMPENSATION BENEFITS AND WAGE CONTINUATION BENEFITS (E.G., INJURY LEAVE) ONLY. INDIRECT COSTS ARE NOT INCLUDED.

INSTRUCTIONS: DETERMINE YOUR ORGANIZATION'S PROBLEM AREAS BY IDENTIFYING THE AREAS WITH THE HIGHEST PERCENTAGES.

OSHA RECORDABLE INJURIES			WORKDAYS LOST				DIRECT COSTS			
ACCIDENT TYPE	OSHA REC INJ NO.	OSHA REC INJ %	ACCIDENT TYPE	WKDYS LOST NO.	WKDYS LOST %	AVG/LOST WKDY CASE	ACCIDENT TYPE	DIRECT COSTS AMT.	DIRECT COSTS %	AVG COSTS/ OSHA REC INJ
OVEREXERTION	13	27.66	FALL FROM STEP	92	29.68	13.14	STRUCK BY OBJECT	7,780	40.66	598
FALL FROM STEP	9	19.15	OVEREXERTION	91	29.35	7.00	OVEREXERTION	3,863	20.19	429
STRUCK BY VEH PART	5	10.64	DROPPED OBJ ON SELF	52	16.77	17.33	FALL FROM STEP	3,151	16.47	630
DROPPED OBJ ON SELF	4	8.51	STRUCK BY VEH PART	22	7.10	11.00	DROPPED OBJ ON SELF	1,636	8.55	409
STRUCK BY OBJECT	3	6.38	FALL TO SAME LEVEL	22	7.10	11.00	FALL TO SAME LEVEL	896	4.68	299
FALL TO SAME LEVEL	3	6.38	STRUCK BY OBJECT	19	6.13	9.50	STRUCK BY VEH PART	761	3.98	254
OBJECT IN EYES	2	4.26	STRUCK AGAINST VEH	4	1.29	4.00	STRUCK AGAINST VEH	328	1.71	164
HURT BY OBJ HANDLED	2	4.26	STEP ON SHARP OBJECT	3	0.97	3.00	STRUCK BY VEHICLE	203	1.06	101
STEP ON SHARP OBJECT	2	4.26	STRUCK BY VEHICLE	3	0.97	3.00	STEP ON SHARP OBJECT	185	0.97	92
STRUCK AGAINST VEH	1	2.13	OBJECT IN EYES	2	0.65	2.00	HURT BY OBJ HANDLED	128	0.67	128
FALL TO DIFF LEVEL	1	2.13	TOTAL	310	100.00	9.39	OBJECT IN EYES	111	0.58	111
CONTACT-NOXIOUS SUBST	1	2.13					FALL TO DIFF LEVEL	58	0.30	58
STRUCK BY VEHICLE	1	2.13					CONTACT-NOXIOUS SUBST	32	0.17	32
TOTAL	47	100.00					TOTAL	19,132	100.00	407

FIGURE 8A PAGE 1

ALL USERS
INJURY TYPES RANKED FROM HIGHEST TO LOWEST
PERCENT OF OSHA RECORDABLE INJURIES

ORTING PERIOD: DECEMBER 1975

INITIONS: OSHA RECORDABLE CASES INCLUDE MEDICAL TREATMENT
ES (I.E. NON-FATAL CASES WITHOUT LOST WORKDAYS), AND LOST WORKDAY,
MANENT DISABILITY AND FATAL CASES. FIRST AID INJURIES ARE NOT INCLUDED.

TRUCTIONS: DETERMINE YOUR ORGANIZATION'S PROBLEM AREAS BY IDENTIFYING
AREAS WITH THE HIGHEST PERCENTAGES.

TYPE OF INJURY	OSHA RECORDABLE INJURIES NO.	%
AIN/STRAIN	19	40.43
ISE/CONTUSION/CRUSHING	16	34.04
/LACERATION/PUNCTURE	4	8.51
CTURE	4	8.51
ECT IN EYE	2	4.26
MITITIS/RASH	1	2.13
ATCHES/ABRASIONS	1	2.13
AL	47	100.00

FIGURE 8 B PAGE 1

ALL USERS
INJURY TYPES RANKED FROM HIGHEST TO LOWEST
PERCENT OF WORKDAYS LOST

REPORTING PERIOD: DECEMBER 1975

DEFINITIONS: OSHA RECORDABLE CASES INCLUDE MEDICAL TREATMENT CASES (I.E. NON-FATAL CASES WITHOUT LOST WORKDAYS), AND LOST WORKDAY, PERMANENT DISABILITY AND FATAL CASES. FIRST AID INJURIES ARE NOT INCLUDED.

INSTRUCTIONS: DETERMINE YOUR ORGANIZATION'S PROBLEM AREAS BY IDENTIFYING THE AREAS WITH THE HIGHEST PERCENTAGES.

TYPE OF INJURY	WORKDAYS LOST NO.	%	AVG WKDYS LOS LOST WKDYS CA
BRUISE/CONTUSION/CRUSHING	143	46.13	14.30
SPRAIN/STRAIN	106	34.19	6.62
FRACTURE	55	17.74	13.75
CUT/LACERATION/PUNCTURE	3	0.97	3.00
OBJECT IN EYE	2	0.65	2.00
SCRATCHES/ABRASIONS	1	0.32	1.00
TOTAL	310	100.00	0.00

FIGURE 8C PAGE 1

ALL USERS
INJURY TYPES RANKED FROM HIGHEST TO LOWEST
PERCENT OF DIRECT COSTS

'ORTING PERIOD: DECEMBER 1975

INITIONS: OSHA RECORDABLE CASES INCLUDE MEDICAL TREATMENT
ES (I.E. NON-FATAL CASES WITHOUT LOST WORKDAYS), AND LOST WORKDAY,
MANENT DISABILITY AND FATAL CASES. FIRST AID INJURIES ARE NOT INCLUDED.
ECT COSTS INCLUDE MEDICAL EXPENSES, WORKER'S COMPENSATION BENEFITS AND
E CONTINUATION BENEFITS (E.G., INJURY LEAVE) ONLY. INDIRECT COSTS
NOT INCLUDED.

TRUCTIONS: DETERMINE YOUR ORGANIZATION'S PROBLEM AREAS BY IDENTIFYING
AREAS WITH THE HIGHEST PERCENTAGES.

TYPE OF INJURY	DIRECT COSTS AMT.	%	AVG COSTS/ OSHA REC INJ
JISE/CONTUSION/CRUSHING	12,530	65.49	659
RAIN/STRAIN	4,410	23.05	232
ACTURE	1,762	9.21	93
T/LACERATION/PUNCTURE	245	1.28	13
JECT IN EYE	111	0.58	6
RATCHES/ABRASIONS	42	0.22	2
RMITITIS/RASH	32	0.17	2
TAL	19,132	100.00	407

FIGURE 9

ALL USERS
PARTS OF BODY INJURED RANKED FROM HIGHEST TO LOWEST PERCENT OF
OSHA RECORDABLE INJURIES, WORKDAYS LOST AND DIRECT COSTS

REPORTING PERIOD: DECEMBER 1975

DEFINITIONS: OSHA RECORDABLE CASES INCLUDE MEDICAL TREATMENT CASES (I.E. NON-FATAL CASES WITHOUT LOST WORKDAYS), AND LOST WORKDAY, PERMANENT DISABILITY AND FATAL CASES. FIRST AID INJURIES ARE NOT INCLUDED.
DIRECT COSTS INCLUDE MEDICAL EXPENSES, WORKER'S COMPENSATION BENEFITS AND WAGE CONTINUATION BENEFITS (E.G., INJURY LEAVE) ONLY. INDIRECT COSTS ARE NOT INCLUDED.

INSTRUCTIONS: DETERMINE YOUR ORGANIZATION'S PROBLEM AREAS BY IDENTIFYING THE AREAS WITH THE HIGHEST PERCENTAGES.

OSHA RECORDABLE INJURIES			WORKDAYS LOST				DIRECT COSTS			
PART OF BODY	OSHA REC INJ NO.	OSHA REC INJ %	PART OF BODY	WKDYS LOST NO.	WKDYS LOST %	AVG/LOST WKDY CASE	PART OF BODY	DIRECT COSTS AMT.	DIRECT COSTS %	AVG COSTS/ OSHA REC INJ
BACK	8	17.02	BACK	61	19.68	8.71	FOOT	9,117	47.65	1,140
FOOT	7	14.89	FOOT	44	14.19	11.00	BACK	2,446	12.78	349
GENITALIA/GROIN	4	8.51	SHOULDER	42	13.55	14.00	SHOULDER	1,501	7.85	375
EYES	3	6.38	LEG	35	11.29	35.00	CHEST/RIBS	1,135	5.93	378
SHOULDER	3	6.38	CHEST/RIBS	25	8.06	25.00	LEG	927	4.85	309
ARM	2	4.26	TOES	24	7.74	24.00	ANKLE	757	3.96	378
WRIST	2	4.26	ANKLE	22	7.10	11.00	TRUNK	584	3.05	292
TRUNK	2	4.26	GENITALIA/GROIN	16	5.16	4.00	GENITALIA/GROIN	545	2.85	272
CHEST/RIBS	2	4.26	TRUNK	11	3.55	11.00	TOES	367	1.92	183
HIPS	2	4.26	KNEE	8	2.58	8.00	KNEE	336	1.76	168
LEG	2	4.26	ARM	5	1.61	5.00	HAND	328	1.71	164
ANKLE	2	4.26	WRIST	5	1.61	5.00	ARM	319	1.67	159
SKULL	1	2.13	HAND	4	1.29	4.00	HIPS	319	1.67	319
ELBOW	1	2.13	HIPS	4	1.29	2.00	WRIST	188	0.98	188
HAND	1	2.13	EYES	3	0.97	1.50	EYES	153	0.80	153
THUMB	1	2.13	BUTTOCKS	1	0.32	1.00	THUMB	68	0.36	68
BUTTOCKS	1	2.13	TOTAL	310	100.00	9.39	BUTTOCKS	42	0.22	42
KNEE	1	2.13					TOTAL	19,132	100.00	407
TOES	1	2.13								
OTHER	1	2.13								
TOTAL	47	100.00								

FIGURE 10

ALL USERS
ACTIVITIES RANKED FROM HIGHEST TO LOWEST PERCENT OF
OSHA RECORDABLE INJURIES, WORKDAYS LOST AND DIRECT COSTS

REPORTING PERIOD: DECEMBER 1975

DEFINITIONS: OSHA RECORDABLE CASES INCLUDE MEDICAL TREATMENT CASES (I.E. NON-FATAL CASES WITHOUT LOST WORKDAYS), AND LOST WORKDAY, PERMANENT DISABILITY AND FATAL CASES. FIRST AID INJURIES ARE NOT INCLUDED.
DIRECT COSTS INCLUDE MEDICAL EXPENSES, WORKER'S COMPENSATION BENEFITS AND WAGE CONTINUATION BENEFITS (E.G., INJURY LEAVE) ONLY. INDIRECT COSTS ARE NOT INCLUDED.

INSTRUCTIONS: DETERMINE YOUR ORGANIZATION'S WORST AREAS BY IDENTIFYING THE AREAS WITH THE HIGHEST PERCENTAGES.

OSHA RECORDABLE INJURIES			WORKDAYS LOST				DIRECT COSTS			
ACTIVITY	OSHA REC INJ NO.	OSHA REC INJ %	ACTIVITY	WKDYS LOST NO.	WKDYS LOST %	AVG/LOST WKDY CASE	ACTIVITY	DIRECT COSTS AMT.	DIRECT COSTS %	AVG COSTS/ OSHA REC INJ
DUMPING INTO HOPPER	13	27.66	DUMPING INTO HOPPER	94	30.32	8.55	PUSHING/PULLING CART	10,244	53.54	788
PUSHING/PULLING CART	7	14.89	PUSHING/PULLING CART	71	22.90	11.83	DUMPING INTO HOPPER	3,973	20.77	568
GETTING ON/OFF STEP	6	12.77	GETTING ON/OFF STEP	55	17.74	11.00	CARRYING CAN/WASTE	1,645	8.60	274
CARRYING CAN/WASTE	5	10.64	CARRYING CAN/WASTE	53	17.10	13.25	GETTING ON/OFF STEP	1,544	8.07	309
STANDING/WALKING	3	6.38	WASHING/CLEARING	15	4.84	7.50	WASHING/CLEARING	608	3.18	203
OTHER	3	6.38	LIFTING CAN/WASTE	11	3.55	5.50	LIFTING CAN/WASTE	494	2.58	165
LIFTING CAN/WASTE	2	4.26	EMPTYING VEH/PACKER	5	1.61	5.00	STANDING/WALKING	274	1.43	137
WASHING/CLEARING	2	4.26	STANDING/WALKING	5	1.61	5.00	EMPTYING VEH/PACKER	188	0.98	94
GETTING IN/OUT CAB	2	4.26	OTHER	1	0.32	1.00	GETTING IN/OUT CAB	83	0.43	41
RIDING ON STEP	1	2.13	TOTAL	310	100.00	9.39	OTHER	47	0.25	47
EMPTYING VEH/PACKER	1	2.13					USING HAND TOOLS	32	0.17	32
PUSH/PULL IN/OUT CAN	1	2.13					TOTAL	19,132	100.00	407
USING HAND TOOLS	1	2.13								
TOTAL	47	100.00								

ALL USERS
ACCIDENT SITES RANKED FROM HIGHEST TO LOWEST
PERCENT OF OSHA RECORDABLE INJURIES

REPORTING PERIOD: DECEMBER 1975

DEFINITIONS: OSHA RECORDABLE CASES INCLUDE MEDICAL TREATMENT CASES (I.E. NON-FATAL CASES WITHOUT LOST WORKDAYS), AND LOST WORKDAY, PERMANENT DISABILITY AND FATAL CASES. FIRST AID INJURIES ARE NOT INCLUDED.

INSTRUCTIONS: DETERMINE YOUR ORGANIZATION'S PROBLEM AREAS BY IDENTIFYING THE AREAS WITH THE HIGHEST PERCENTAGES.

ACCIDENT SITE	OSHA RECORDABLE INJURIES NO.	%
IN/ON VEHICLE	7	14.89
STREET AT BACK OF TRUCK	6	12.77
ALLEY AT BACK OF TRUCK	6	12.77
CUSTOMER YARD	5	10.64
CUSTOMER DRIVEWAY	5	10.64
LANDFILL, AT BACK OF TRUCK	4	8.51
OTHER	4	8.51
MID ALLEY	3	6.38
ALLEY AT CURB	3	6.38
STREET AT CURB	2	4.26
MID STREET	1	2.13
LANDFILL, IN/ON VEHICLE-DUMP SITE	1	2.13
TOTAL	47	100.00

FIGURE 11B PAGE 1

ALL USERS
ACCIDENT SITES RANKED FROM HIGHEST TO LOWEST
PERCENT OF WORKDAYS LOST

ORTING PERIOD: DECEMBER 1975

INITIONS: OSHA RECORDABLE CASES INCLUDE MEDICAL TREATMENT
ES (I.E. NON-FATAL CASES WITHOUT LOST WORKDAYS), AND LOST WORKDAY,
MANENT DISABILITY AND FATAL CASES. FIRST AID INJURIES ARE NOT INCLUDED.

TRUCTIONS: DETERMINE YOUR ORGANIZATION'S PROBLEM AREAS BY IDENTIFYING
AREAS WITH THE HIGHEST PERCENTAGES.

ACCIDENT SITE	WORKDAYS LOST NO.	%	AVG WKDYS LOST/ LOST WKDYS CASE
EET AT BACK OF TRUCK	52	16.77	10.40
EY AT CURB	44	14.19	14.67
ALLEY	43	13.87	14.33
STREET	35	11.29	35.00
EY AT BACK OF TRUCK	31	10.00	6.20
EET AT CURB	27	8.71	13.50
ON VEHICLE	23	7.42	7.67
STOMER DRIVEWAY	23	7.42	7.67
IER	11	3.55	5.50
DFILL, AT BACK OF TRUCK	10	3.23	5.00
STOMER YARD	7	2.26	2.33
DFILL, IN/ON VEHICLE - DUMP SITE	4	1.29	4.00
AL	310	100.00	0.00

ALL USERS
ACCIDENT SITES RANKED FROM HIGHEST TO LOWEST
PERCENT OF DIRECT COSTS

REPORTING PERIOD: DECEMBER 1975

DEFINITIONS: OSHA RECORDABLE CASES INCLUDE MEDICAL TREATMENT CASES (I.E. NON-FATAL CASES WITHOUT LOST WORKDAYS), AND LOST WORKDAY, PERMANENT DISABILITY AND FATAL CASES. FIRST AID INJURIES ARE NOT INCLUDED. DIRECT COSTS INCLUDE MEDICAL EXPENSES, WORKER'S COMPENSATION BENEFITS AND WAGE CONTINUATION BENEFITS (E.G., INJURY LEAVE) ONLY. INDIRECT COSTS ARE NOT INCLUDED.

INSTRUCTIONS: DETERMINE YOUR ORGANIZATION'S PROBLEM AREAS BY IDENTIFYING THE AREAS WITH THE HIGHEST PERCENTAGES.

ACCIDENT SITE	DIRECT COSTS AMT.	%	AVG COSTS/ OSHA REC INJ
MID ALLEY	8,822	46.11	1,260
STREET AT BACK OF TRUCK	1,597	8.35	228
ALLEY AT CURB	1,537	8.03	220
ALLEY AT BACK OF TRUCK	1,464	7.65	209
STREET AT CURB	1,169	6.11	167
CUSTOMER DRIVEWAY	1,086	5.68	155
IN/ON VEHICLE	1,005	5.25	144
MID STREET	867	4.53	124
OTHER	526	2.75	75
CUSTOMER YARD	493	2.58	70
LANDFILL, AT BACK OF TRUCK	462	2.41	66
LANDFILL, IN/ON VEHICLE - DUMP SITE	104	0.54	15
TOTAL	19,132	100.00	407

FIGURE 12

ALL USERS
TYPES OF WASTE INVOLVED RANKED FROM HIGHEST TO LOWEST PERCENT OF
OSHA RECORDABLE INJURIES, WORKDAYS LOST AND DIRECT COSTS

REPORTING PERIOD: DECEMBER 1975

DEFINITIONS: OSHA RECORDABLE CASES INCLUDE MEDICAL TREATMENT CASES (I.E. NON-FATAL CASES WITHOUT LOST WORKDAYS), AND LOST WORKDAY, PERMANENT DISABILITY AND FATAL CASES. FIRST AID INJURIES ARE NOT INCLUDED.
DIRECT COSTS INCLUDE MEDICAL EXPENSES, WORKER'S COMPENSATION BENEFITS AND WAGE CONTINUATION BENEFITS (E.G., INJURY LEAVE) ONLY. INDIRECT COSTS ARE NOT INCLUDED.

INSTRUCTIONS: DETERMINE YOUR ORGANIZATION'S PROBLEM AREAS BY IDENTIFYING THE AREAS WITH THE HIGHEST PERCENTAGES.

OSHA RECORDABLE INJURIES			WORKDAYS LOST				DIRECT COSTS			
TYPE OF WASTE	OSHA REC INJ NO.	OSHA REC INJ %	TYPE OF WASTE	WKDYS LOST NO.	WKDYS LOST %	AVG/LOST WKDY CASE	TYPE OF WASTE	DIRECT COSTS AMT.	DIRECT COSTS %	AVG COSTS/ OSHA REC INJ
NOT APPLICABLE	36	76.60	NOT APPLICABLE	254	81.94	9.07	NOT APPLICABLE	17,139	89.58	476
GLASS	4	8.51	FURNITURE/APPLIANCES	33	10.65	33.00	FURNITURE/APPLIANCES	1,043	5.45	261
SHRUBBERY,UNBUNDLED	2	4.26	RATS/HOSTILE CREATURE	17	5.48	17.00	RATS/HOSTILE CREATURE	462	2.41	231
DUST/ASHES IN WASTE	1	2.13	GLASS	3	0.97	3.00	GLASS	222	1.16	222
NOXIOUS CHEMICALS	1	2.13	SHRUBBERY,UNBUNDLED	2	0.65	2.00	SHRUBBERY,UNBUNDLED	147	0.77	147
RATS/HOSTILE CREATURE	1	2.13	FROZEN WASTE	1	0.32	1.00	DUST/ASHES IN WASTE	45	0.24	45
FROZEN WASTE	1	2.13	TOTAL	310	100.00	9.39	FROZEN WASTE	42	0.22	42
FURNITURE/APPLIANCES	1	2.13					NOXIOUS CHEMICALS	32	0.17	32
TOTAL	47	100.00					TOTAL	19,132	100.00	407

SECTION III

SAFETY NEWS

ANSI Z245.1 STANDARD APPROVED AND AVAILABLE

For approximately two years a volunteer "Consensus" group of representatives from industry (both public and private), unions, equipment manufacturers and safety experts have been working on the development of Safety Standards for Refuse Collection Equipment (the ANSI Z245 standards). The first of these standards, the ANSI Z245.1, entitled, "Safety Standard for Refuse Collection Equipment" has now been completed and approved by ANSI (the American National Standards Institute). Solid Waste agencies desiring a copy of this standard should write or phone:

American National Standards Institute, Inc.
1430 Broadway
New York, New York 10018
(212) 868-1220

There will be a small charge (<$10.00) to obtain a copy of the standard.

Accident Trends
1st Quarter 1976

IRIS

EXHIBIT 2

ACCIDENT TRENDS

IN THE SOLID WASTE MANAGEMENT INDUSTRY

QUARTER: JANUARY 1 TO MARCH 31, 1976

DEVELOPED BY SAFETY SCIENCES, DIVISION OF WSA, INC.
FOR THE U.S. ENVIRONMENTAL PROTECTION AGENCY
OFFICE OF SOLID WASTE MANAGEMENT PROGRAMS
UNDER CONTRACT NO. 68-03-0231

safety sciences Division of WSA Inc., 11772 Sorrento Valley Road
San Diego, CA 92121 (714) 755-9359 & 452-1010

ACCIDENT TRENDS in the Solid Waste Management Industry is developed quarterly using data from IRIS (the Injury Reporting and Information System for Solid Waste Management). ACCIDENT TRENDS is designed to summarize and discuss the data from all IRIS users and to provide data and conclusions which affect the industry as a whole. A companion volume, the QSMR, (Quarterly Safety Management Report) is developed individually for each IRIS user who reported injuries during the quarter. Each QSMR concentrates only on the injuries of the individual IRIS user for which it is prepared.

ACCIDENT TRENDS is based on data received from many users at great speed. There may be areas in which misinterpretations or mistakes have been made. Time lost and cost data are based on data received to date and are thus often too low, either because costs were not available or because cases are still open. These cases are being followed and the accuracy of cost data will improve with time. All recommendations on accident prevention measures are tentative and all must be evaluated in terms of their applicability and feasibility for individual users.

ACCIDENT TRENDS

IN THE SOLID WASTE MANAGEMENT INDUSTRY

QUARTER: JANUARY 1ST TO MARCH 31ST, 1976

TABLE OF CONTENTS

	Page
INTRODUCTION	
I. Section I - DISCUSSION OF ACCIDENT CHARACTERISTICS AND PREVENTION METHODS	
Protection Against Objects Ejected from the Hopper	5
Standing Behind Packer Truck	9
Caught in Packer	11
Step Related Accidents	15
Other Falls	19
Overexertion Accidents	22
Plastic Bags	25
Vehicle Accidents	25
Animal Accidents	27
Preliminary Task/Hazard Analysis	27
II. Section II - SUMMARY OF IRIS USER INDUSTRY-WIDE DATA	45
Part I - Frequency, Severity, Costs	45
How to read FIGURE 5	45
How to read FIGURE 6-8	45
Part II - Characteristics of Accidents	55
III. Section III - SAFETY NEWS	67

LIST OF FIGURES AND TABLES

		Page
TABLE A:	Preliminary Task I Hazards Analysis	36
TABLE B:	Summary of Injuries by Frequency, Severity and Costs	49
TABLE C:	Summary of Accidents by Characteristic - Characteristics with Highest Percent of OSHA Recordable Injuries, Workdays Lost, and Direct Costs	56
FIGURE 1:	Description of Users by Operational Characteristics	2
FIGURE 2:	Profile of Accidents by Accident Type, and Activity	28
FIGURE 3:	Profile of Accidents by Part of Body and Nature of Injury	33
FIGURE 4:	Use of Rubber "Mud Guard" Flaps as Protection Against Objects Ejected from the Hopper	7
FIGURE 5:	Number of Injuries Reported by Type of Severity - Comparison of 'IRIS' Users	50
FIGURE 6:	Average Injury Rates by 'IRIS' Users Ranked from Highest to Lowest	51
FIGURE 7:	Average Workdays Lost Per Lost Workday Case by 'IRIS' Users Ranked from Highest to Lowest	53
FIGURE 8:	Direct Costs by 'IRIS' Users Ranked from Highest to Lowest	54
FIGURE 9:	Accident Types Ranked from Highest to Lowest Percent of OSHA Recordable Injuries, Workdays Lost, and Direct Costs	57
FIGURE 10 A-C:	Injury Types Ranked from Highest to Lowest Percent of OSHA Recordable Injuries, Workdays Lost and Direct Costs	58
FIGURE 11:	Parts of Body Injured Ranked from Highest to Lowest Percent of OSHA Recordable Injuries, Workdays Lost, and Direct Costs	61

		Page
FIGURE 12:	Activities Ranked from Highest to Lowest Percent of OSHA Recordable Injuries, Workdays Lost, and Direct Costs	62
FIGURE 13 A-C:	Accident Sites Ranked from Highest to Lowest Percent of OSHA Recordable Injuries, Workdays Lost, and Direct Costs	63
FIGURE 14:	Types of Waste Involved Ranked from Highest to Lowest Percent of OSHA Recordable Injuries, Workdays Lost, and Direct Costs	66
FIGURE 15:	Diagram of Bak-safe bar on Front-End Loader	68

INTRODUCTION

This is the Accident Trends Report for the quarter ending March 31, 1976. Before reading the results, the following points should be noted:

- All IRIS users are identified only by number. A table giving background information on the operational characteristics of each IRIS user by their number is shown in FIGURE 1.

- This Accident Trends report covers 575 accidents reported by 35 IRIS users from across the United States during January 1st to March 31st, 1976.

- This QSMR covers the first quarter of 1976. However, not all users started reporting injuries on January 1st. Some started before this date, and some started on February 1st or March 1st. The injury rates shown are comparable, however, because the different starting dates are reflected in the hours of exposure. Some users who started "late" in the quarter may not have reported enough injuries this quarter to make much analysis possible.

- The phrase "AVERAGE" refers to the injury rates or numbers for all IRIS users combined.

- The FIGURES include the injury and time lost and cost data that was provided to IRIS by May 15, 1976, the "closing date" for this quarter. Some of the time lost and cost data include "open" cases for which data is <u>not</u> final. All of the workdays lost and costs data should therefore be interpreted as gross underestimates of the actual workdays lost and cost data.

This ACCIDENT TRENDS report is divided into three sections. SECTION I provides a discussion of the accidents and prevention methods found during this quarter. It includes a Preliminary Task/Hazards Analysis for the solid waste management industry. SECTION II summarizes the data received for all IRIS users during the quarter. SECTION III reviews some of the safety news of the solid waste management industry.

DESCRIPTION OF USERS BY OPERATIONAL CHARACTERISTICS

User Number	Municipal=M Private=P	Geographical Area	Number of Employees	M=Mechanical A=Alley BY=Backyard CS=Curbside I=Int.Cont. W=Wheeled	Type of Shift	Type of Service Provided		
						Coll. Crew Size(s)		Disposal L=Landfill I=Incinerator T=Trans. Stn.
						Comm.	Resid.	
101	M	South	325	A-BY-C	Task/ Fixed	4	4	L
111	M	West	275	CS	Task	-	-	L
109	M	Midwest	600	M-I-W	Fixed	4	4	-
261	M	Midwest	25	A-CS	Task	-	3	L
212	M	West	100	CS-A	Fixed	2	2	-
210	M	West	25	A-CS	Task	2	1	L-T
211	M	West	50	A-CS	Fixed	2	2	L
207	M	West	200	BY-I-W	Task	3	3	-
161	M	Midwest	125	CS-A	Task	3	3	L
136	M	South	150	A-CS-I-W	Fixed	3	3	L
236	M	South	100	CS	Task	3	3	L
125	M	South	650	CS	Task	-	1,3	L-I
181	M	Midwest	275	BY-A	Task	-	4	L
171	M	Midwest	375	CS	Fixed/ Task	-	3	-

FIGURE 1

DESCRIPTION OF USERS BY OPERATIONAL CHARACTERISTICS

User Number	Municipal=M Private=P	Geographical Area	Number of Employees	M=Mechanical A=Alley BY=Backyard CS=Curbside I=Int.Cont. W=Wheeled	Type of Shift	Type of Service Provided		
						Coll. Crew Size(s)		Disposal L=Landfill I=Incinerator T=Trans, Stn.
						Comm.	Resid.	
146	M	South	300	CS-BY-I	Task	1,2	1,2,3	L-T
215	M	South	75	CS-BY-I	Task/ Fixed	1	3	-
204	M	West	50	M-CS-BY-I-W	Fixed	1	3	L
172	M	West	700	M-A-CS-BY	Task/ Fixed	-	1,2,3	L
265	M	West	200	CS-BY-I-W	Task	-	1,2	L-T
260	M	West	175	CS-BY-I	Task	2,3	2	L
191	M	South	175	CS	Task/ Fixed	1	3	L-I
242	M	South	50	CS-BY-I	Task/ Fixed	3	3	L-T
140	M	South	850	CS	Task	-	3	-
186	M	South	300	CS	Task	3	3	L
272	M	Northeast	100	CS	Task	3	3	L-I
235	M	South	125	BY-A	Task	3	3	L
295	M	South	175	CS-BY	Task/ Fixed	-	4	L
244	M	West	25	BY	Task	2	2	-

FIGURE 1 (cont.)

DESCRIPTION OF USERS BY OPERATIONAL CHARACTERISTICS

User Number	Municipal=M Private=P	Geographical Area	Number of Employees	M=Mechanical A=Alley BY=Backyard CS=Curbside I=Int.Cont. W=Wheeled	Type of Shift	Type of Service Provided		
						Coll. Crew Size(s)		Disposal L=Landfill I=Incinerator T=Trans, Stn.
						Comm.	Resid.	
286	M	West	25	-	Fixed	-	-	L-T
243	M	Northeast	50	BY-I	Task	1,5	1,5	-
296	M	West	50	CS-A	Fixed	2	1	-
292	M	Northwest	225	CS-BY-I-W	Fixed	2	1,3	L
237	M	Midwest	100	A-BY-I-W	Task/ Fixed	3	3	-
285	M	Midwest	75	CS-BY-I-W	Task	-	3	-
283	M	South	75	CS-A	Task	1	2	L-T

FIGURE 1 (cont.)

SECTION I

DISCUSSION OF ACCIDENT CHARACTERISTICS AND PREVENTION METHODS

The following is a discussion of the characteristics of accidents occurring this quarter and of accident prevention methods (i.e., countermeasures) suggested by IRIS users for the hazards identified. Selected hazards are discussed in detail and countermeasures are offered. The hazards and countermeasures are then systematically compiled in a Preliminary Task/Hazards Analysis shown in TABLE A.

Figures 2 and 3, shown at the end of Section I, summarize the accident characteristics for this quarter. FIGURE 2 is a profile listing each accident type/activity scenario occurring this quarter and giving the number of injuries, days lost, and costs for each scenario. FIGURE 3 gives similar data for each injury type/part of body injured combination.

Protection Against Objects Ejected from the Hopper

As can be seen in FIGURE 2, objects in eye are a frequent accident type amounting to 9% of the OSHA recordable injuries. Being struck by objects is also a fairly frequent accident type. Many of these accidents are the result of objects being ejected from the hopper. What frequently happens is that an employee will dump a can of refuse into the hopper bed and start the packing mechanism. The force of the packer blade will compress certain items of waste, especially glass bottles, causing them to shatter and "spit" out of the hopper hitting the employees standing behind the truck like shrapnel.

For example, one employee this quarter was knocked unconscious (possible concussion) as the result of a bottle flying out of the hopper and hitting him between the eyes. In this case the bottle had not shattered, but in another case the employee had pieces of glass fly into his eyes from out of the hopper after a bottle was shattered by the packer blade. In 6 other cases the object flying out of the hopper and into the eye was not identified. Two employees received severe cuts across the forehead when the packer blade broke a stick of wood and sent it flying toward the employee. One employee received a chemical burn to the eyes when what is believed to be a clorox bottle was crushed by the packer,

spattering the employee. In a related accident the hydraulic hose line in the hopper blew apart and spattered hydraulic oil in an employee's eyes. In three cases employees stated that the packer blade had "popped" the plastic bag they had just put in the hopper, so that sawdust, ashes, and other waste flew into their eyes. One IRIS user reported that on certain types of equipment a "vacuum" is sometimes created when the packer is operating so that when the cycle is completed the hopper will "blow out" causing dust and ashes to be ejected.

Altogether 18 accidents, 2 serious ones, this quarter were the direct result of being hit by objects flying from the hopper while the packer blade was operating. Although no permanent impairments resulted this quarter, it is obvious that this type of accident has a fairly high potential for blinding or disfiguring an employee.

A simple device for reducing this hazard has been developed and is in use by one IRIS user, the City of San Diego and is shown in FIGURE 4. The cut-away view shows a loose curtain of heavy rubber flaps which hangs in front of the packer blade area to stop ejected objects.

The size and location of this locally constructed curtain can be varied to suit different packing mechanism designs and the availability of suitable materials. In this case the flaps are 1 foot strips, mounted on a cross bar, and suspended by 3 chain lengths. Truck mud guards were used as the curtain material. The flaps must hang loosely but securely from chains of at least three links to prevent them from getting caught on objects in the hopper and from becoming permanently trapped in the packing mechanism. It must be emphasized that the flaps are set back in the hopper so that they do not interfere with dumping.

The city maintenance department designed, produced and installed these flaps at an estimated cost of 6 hours labor and $20 in materials per truck. (The city has found that local truck modifications are often cheaper and better than changing bid specifications). The city had previously had about one "hopper ejection" accident a week, but has not had one accident of this type since the installation of these "flaps."

The applicability of this device may depend on the type of packer. Some types of packers have the hopper bed wall rise, so that the pinch point is automatically protected at the time the packer blade crushes the material. The city

FIGURE 4

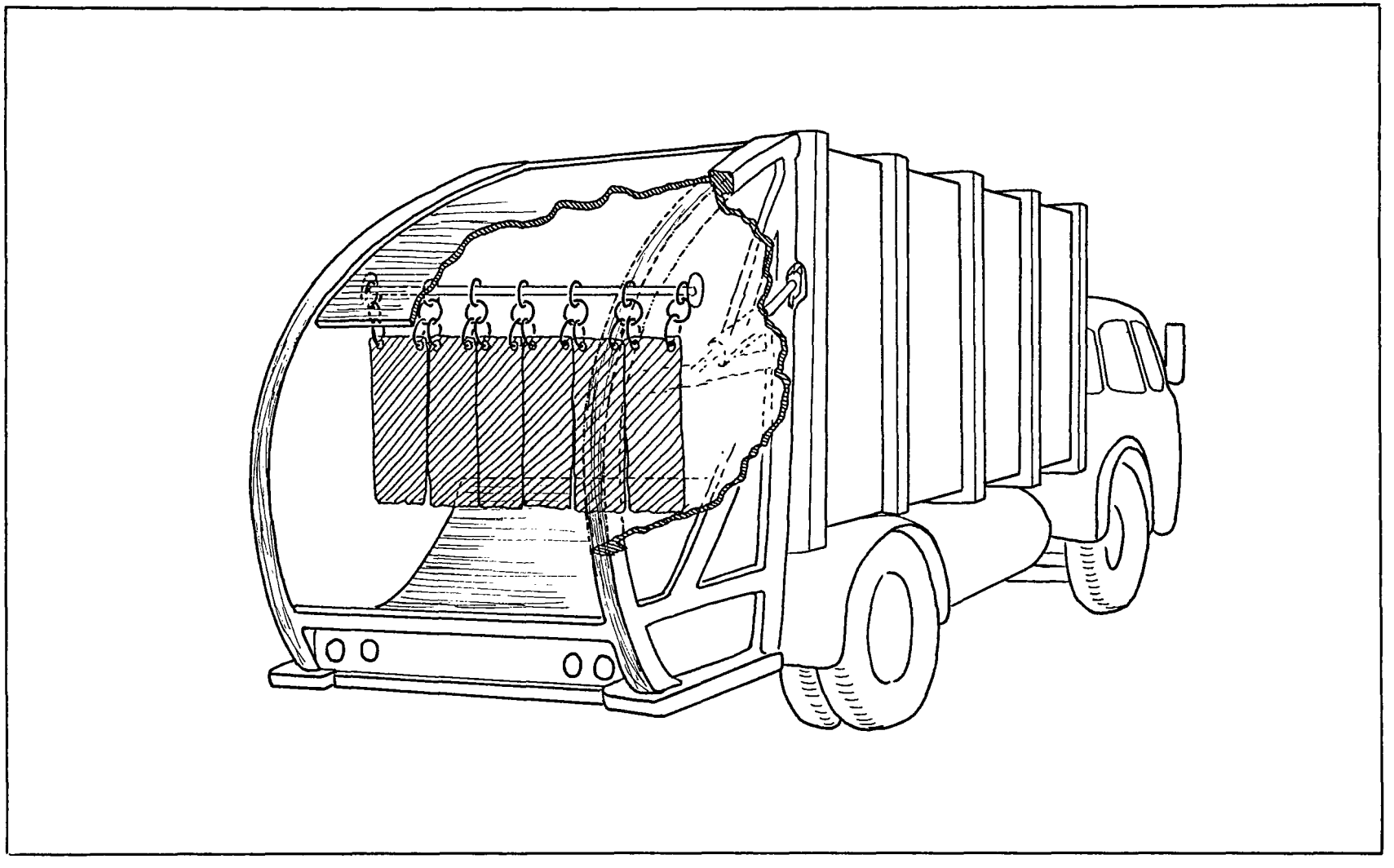

USE OF RUBBER "MUD GUARD" FLAPS
AS PROTECTION AGAINST OBJECTS EJECTED FROM THE HOPPER

of San Diego had some Heil* packers of this type and the device was not installed on these packers. The Garwood* packers which this city had, however, did leave the blade exposed so that items could be ejected.

The city first tried to prevent this accident by the use of a "safety door", provided by Garwood, which automatically came down at the edge of the hopper when the packer was operating. This was not deemed satisfactory however. The door was expensive and would sometimes require replacement when large objects dented it from the inside. This apparently does not occur with the flaps. It was reported that the "safety door" was in fact hazardous in that it occasionally came down unexpectedly and hit employees. Employees felt that the door slowed down operations (because it came down at the edge of the hopper, employees could not dump while it was down) and therefore it had very low acceptance by employees and was frequently deliberately jammed to make it inoperable. The flaps have apparently met with wide acceptance by the employees although some have requested that about a 1/3 of one of the flaps (the one on the far right) be cut away to enable them to look in at the packer blade. This request was granted even though it reduces the protection afforded by the flaps, because acceptance of the safety device was deemed important.

This device may not be applicable or effective in all cities but it is believed to be effective in San Diego. This device is an example of how cities can take the initiative on safety prevention and with a minimum of costs, skill or materials prevent accidents. Cities wishing to learn more about this device may contact the IRIS Central Office or the city of San Diego directly. The city wishes to emphasize, however, that no standard drawings or specifications are available.

Another IRIS user has developed another countermeasure for the "hopper ejection" accident. Employees in the city of Milwaukee have been trained to use their left hand to operate the packing mechanism. This almost forces the employee operating the packer to stand with his head facing away from the packer when it is operating, thus reducing the risk of eye injuries. Although some difficulty in getting all employees to cooperate was experienced, the city believes that at least one very serious accident (possible blindness)

---

*These statements are not an endorsement or criticism of a particular make. Not all packers of the same make are alike. The comments mentioned here refer only to the particular packers used by this city, not to all packers with these makes.

was avoided because of the use of this work practice.

Related to this work practice rule, is the rule used by some industries of turning the head to the side when loading or unloading. Bottling companies often train employees to turn their head aside as they set down or lift off a carton of bottles in order to avoid the hazard of flying glass from bottles of carbonated drinks which occasionally explode under impact. They have found that employees who are trained in this practice when they first start will do it automatically for the rest of their employment. Refuse collectors might also be trained to turn their head to the side as they dump containers and waste, thus helping to protect the eyes from ejecting glass.

A few IRIS users require eye goggles or glasses and some require bump caps or hard hats. These protective clothing may also act as a countermeasure against some of the "hopper ejection" hazards.

Standing Behind Packer Truck

Of course, the best protection against hopper ejection accidents is to avoid standing behind packer trucks. As can be seen in FIGURE 13, "in back of truck" is the most hazardous refuse collection site. Because it is normally necessary for employees to spend some time behind the truck, employees forget to minimize the time spent behind the packer. Some IRIS users apparently have employees who walk behind the truck all day and never leave this location. This is almost certainly not necessary. Employers should evaluate their daily collection methods to see if the time spent behind the packer can be reduced. Employees should be trained to get away from the back of the truck as soon as possible and to only stand there when it is necessary.

Hopper ejection accidents are not the only hazard to employees standing behind the packer. Six accidents this quarter occurred due to an employee being unintentionally hit by another employee's container. In an additional case, an employee was hit when a chair that another crewman had thrown in hopper fell back out. This type of accident frequently occurred as the employee was turning around at the back of the truck. This type of accident appears to occur less frequently with smaller crew sizes. Employers with more than 2-man crews should examine their collection procedures in detail. In some cases, once this problem is identified a coordinated walking pattern can be developed between crew members so that only one crewman is at the back of the truck at a time.

In addition, it may be possible to reduce the times when employees are behind the truck while another employee is operating the packer. This "rhythm method" may not be as hard to encourage as it sounds. Crewmen frequently state that they develop a rhythm what is needed is to coordinate the rhythm of several employees. A good crew leader may be useful in this regard. In most cities which have crew leaders, however, the driver is the crew leader. This is probably not the most practical procedure as much of the real need for leadership appears to take place behind the truck.

Employees standing behind the truck are also subject to being hit by the truck. One employee this quarter was hit by the packer when it rolled backwards while he was standing behind the truck. (Another employee was injured while riding in the cab, as the packer was backing, when the truck struck a car. The dangers of these two accidents may have been reduced by the use of a Bak-Safe device such as the one described in Section III, Safety News, of this report). An employee standing toward the rear and side of the truck was hit by a brick that was flipped up when the truck ran over it.

Another employee, on a hand sweeping crew, was hit while sweeping between two cars when a car backed into him. Walking between cars is extremely dangerous, and working procedures should be designed to avoid this practice.

Exhaust fumes are a hazard to employees standing behind the packer. Four cases in this quarter involved exposure to exhaust fumes. In three of the cases the exhaust system was malfunctioning (two cases at the rear of the truck, one into the cab). Employees become dizzy and nauseated; in one case an employee passed out; in another a heart attack occurred, although this may or may not have been related to exhaust fumes. Studies in New York City (Cimino, 1974) have shown an increased likelihood of cardiovascular disease among refuse collectors. This higher risk has not been explained, but daily exposure to low levels of carbon-monoxide (contained in exhaust fumes) is suspected by some investigators. Although this theory has not been proven, it does suggest that careful attention to maintenance of exhaust systems and minimizing the time spent at the back of the truck is advisable.

Training of employees should include awareness of the dangers at the back of the truck. Employees should be taught to evaluate their work patterns and to ask themselves "Do I really need to be standing here?"

Caught in Packer

Seven injuries this quarter, including the most severe accident reported, involved getting caught in the packing mechanism. One employee reached for paper that had fallen in front of the blade while the hopper was operating. His right forearm was caught by the hopper blade and amputated. Two other employees got their arms caught in the packer (one fracture, one laceration) while pushing falling waste back into the hopper. One of these employees got his glove caught on the blade when pushing waste back into the hopper. Two additional employees are suspected to have been pushing falling waste back into the hopper when their hands were cut by the packer blade. Two employees were riding on the step with their feet partially in the hopper when the packer blade was activated; one employee fractured his foot, another bruised his toe. Another employee broke his heel when he jumped off the step to avoid getting caught in the packer. The employee was standing on the rear of the step while the truck was backing up (a violation of city safety rules for this particular IRIS user). The driver had the truck in "power take off", and the packer activated. The rider had his hand and foot in the hopper, and got scared and jumped off to avoid the hopper blade.

Two extremely hazardous practices appear to be responsible for the "caught-in-packer" accidents: (1) pushing falling waste back into the hopper, and (2) riding on the step with the feet and/or hands partially in the hopper. Employees should be trained concerning the hazards of getting caught in the packing mechanism. This should include information about the very strong pull that the blade has, as many employees may assume that they can simply pull their hand back out if it gets caught. Employees should be told explicitly that if waste appears to be falling out of the hopper, "LET IT GO". Most people have a "natural tendency" to want to save or catch falling materials and unless they are not only told, but explicitly trained to let falling materials go, they will "automatically" push it back. One IRIS user suggested providing a bar with which to push materials back into the hopper so that employees would not use their hands. It is possible that the "flaps" over the packer blade (as described above) may reduce the number of "caught-in-packer" accidents. Often it is the operation of the packer that causes objects to fall back out of the hopper, and to the extent that the flaps keep things from falling out, employees will be less likely to be caught in the packer while pushing waste back into the hopper.

In some cases employees may have been attempting to grab an item out of the hopper for scavenging when they were caught by the packer. Some IRIS users have explicit work rules prohibiting scavenging and such rules are recommended. It is often possible to tell if employees are scavenging by checking the cab for items stowed there. (One employee was injured this quarter when some bottles he had been saving fell out on him when he opened the cab door).

Riding on the step with the feet or hands partially in the hopper is a very dangerous practice. Employees should be instructed on how to get on and ride the step and explicitly told not to ride with any body part in the hopper. Certain IRIS users appear to have many more employees riding in the hopper than others, indicating that there are means of controlling this practice.

The design and location of the steps and grab handles should be evaluated to determine if the employee has sufficient room to stand without feeling unstable. It is possible that employees may be putting their hands and feet in the hopper because they feel "safer" (from falling) in that position. Grab handles should be located so that the employee feels more secure and comfortable by using the grab handle than he does using the side of the hopper to hold onto. Examination should be made of the design of the back corners of the packers. It may be possible to locate the steps far enough down the side of the truck or extend the side of the hopper out far enough to make it very awkward for the rider to ride partially in the hopper. Care has to be taken to ensure that the view of the hopper is not blocked to the packer operator. Also if steps are placed too far down the side of the truck, employees may use the hopper to ride in instead of on the step. Certain IRIS users, especially those with larger crew sizes, do presently allow employees to regularly ride in the hopper. This practice is strongly discouraged.

The American National Standards Institute Z245.1-1975 Standard entitled "Safety Requirements for Refuse Collection and Compaction Equipment" has several standards relevant to caught-in-packer accidents. Section 7.3.3 "Controls" prescribes:

7.33 Controls

7.3.3.1 Each control shall be conspicuously labeled as to its function.

7.3.3.2 Controls (for example, for operating packer panel, tailgate, point-of-operation guards, ejector panel, container hoists) shall be designed and located to prevent unintentional activation.

7.3.3.2.1 Start buttons shall be recessed or located to prevent unintentional activation.

7.3.3.2.2 Stop button controls shall be red, distinguishable from all other controls by size and color, and not be recessed.

7.3.3.3 Packing cycle controls shall be located so that the operator has a view of the loading sill. In order to minimize exposure to normal traffic, the packing cycle operating controls shall be located on the side of the vehicle opposite the normal traffic side of the vehicle. Two sets of packing cycle controls shall not be permitted except for additional dock height controls located on the same side and above the packing cycle controls.

7.3.3.4 Controls for raising the tailgate and unloading the compacted load shall be located away from the rear of the equipment.

7.3.3.5 For emergencies a means of stopping and moving the packer panel away from the pinch point (prior to the pinch point) shall be provided. Emergency stop controls shall be red, distinctly labeled as to function, and not be recessed.

Section 7.3.6, "Point-of-Operation Protection", of the standard is also designed to protect against "caught-in-packer" accidents:

7.3.6 Point-of-Operation Protection. The employee shall be protected from pinch points during the packing cycle by one of the following means:

(1) Deadman control from the initiation of the packing cycle until the packer panel clears the loading sill.

(2) An elevating hopper that raises any pinch point during the packing cycle at least 5 feet above the working surface.

(3) A movable guard that is interlocked with the packing cycle so that it is in place before the packer panel is within 6 inches of the pinch point. The movable barrier shall be designed so that it shall not be hazardous in itself.

(4) A control that provides an interrupted cycle. Actuation of the control shall cause the packer panel to stop not less than 6 inches or more than 16 inches from the pinch point created by the packer panel as it moves past the hopper loading sill. The control shall require reactivation to complete the packing cycle by a subsequent motion by the operator.

(5) Other means, at least as effective as those given in 7.3.6(1) through 7.3.6(4), that will protect an employee from the pinch point.

At least one IRIS user has two-handed controls for operating the packer. That is, the operator has to have both hands on the packer controls to activate the packer blade. This prevents the operator from having his hands in the hopper when the packer is operating. However, this IRIS user states that the employees almost invariably jam one of the controls so that it can be operated with one hand. This is due primarily to the frequent practice of packing while riding on the step. This practice should be carefully examined. It is possible that this relatively hazardous practice is in some ways safer if it reduces the number of employees standing behind the hopper or dumping refuse when the packer is operating.

Five accidents this quarter were specifically related to controls. These employees reported getting their hands caught in, twisted, jerked, pinched or sprained while using sweep blade handles, tailgate controls and packer controls. In one case the control handle broke causing the employee to smash his finger. In another the employee was packing and caught his finger in the trip handle that activates the packer. Design features of these controls should be reviewed.

The hazard of getting caught in the packer is often disregarded, even though its severity is recognized, because

it is believed to occur so infrequently. About 1% of the accidents this quarter were "caught-in-packer" accidents which although low, might be considered relatively high number for the severity of the accident. Employers should recognize that at this low rate there may be several years between "caught-in-packer" accidents at their establishment, especially if they are small. The fact that an employer has not had a "caught-in-packer" accident in some time does not, therefore, necessarily indicate that his system is protected from this accident. The IRIS data from a large number of employers is valuable in that it can indicate low frequency/ high severity accidents to employers before they occur. If employees at your organization frequently use their hands to push waste back into the hopper or if they frequently ride with their feet or hands partially in the hopper, you should assume that they are at high risk for "caught-in-packer" accidents and take action to lower this risk before a "caught-in-packer" accident occurs.

Step Related Accidents

Getting caught in the packing mechanism is not the only hazard of riding on the step. There are several other hazards associated with riding, and getting on and off the step. Altogether step-related accidents amounted to 14% of the OSHA recordable accidents, 16% of the workdays lost and 16% of the costs for this quarter. Accidents while getting off were the most frequent followed by accidents while riding on the step, accidents while getting out of the cab, and accidents while getting on the step.

Employees riding on the step are subject to striking against objects by which the truck passes to closely. Seven employees were injured this way this quarter. The truck will frequently come too close to parked cars, trees, telephone posts, etc. One employee struck against a telephone post (at approximately 10 miles per hour) because he was leaning around the side of the truck trying to engage the packing mechanism while riding on the step. Two employees were struck against limbs of trees as the truck drove by them. One employee saw that he was about to be squeezed between the truck and a parked car; he jumped off and over the car hood and was badly bruised. Another employee saw that he was about to hit a building and jumped off only to be squeezed between the truck and the building. In the last case the truck was equiped with a warning device, specifically designed for this type of accident, by which the step rider could signal the driver to stop. The employee was aware of the warning device but was too panicked to remember to use it.

Such a signal is a useful countermeasure for this type of accident, but it is obvious from this accident that employees must not only be informed of the device but be given training which involves practice in using it. Mock near-misses can be staged at tailgate training sessions in which employees practice using the warning devices. Silly as it sounds, this type of emergency reaction training is essential to train employees to respond correctly in real life situations.

In most cases it is better for the employee to remain on the truck, and not jump off the truck when they are about to hit something. Training should include informing the employee of this. Training should also include how to ride a step properly, e.g., to keep the body and arms close to the truck. The driver should also be included in this training; he should be taught to judge distances and the effect of increased speed on the rider. The Bak-safe device described in the Safety News section of this report may prevent some of this type of accident.

A related hazard to step riders is when the step hits the ground and throws the rider either off the step or against the truck. Three accidents were of this type this quarter. Drivers should be made aware of this hazard. Turning corners, rapid changes in the surface grade (e.g., a dip at the bottom of a hill) and hitting driveways, gutters and curbs are three situations that may cause the step to hit bottom which the driver should be aware of. Related to this accident type were 6 accidents in which the truck lurched and the rider was thrown against the truck. Turning corners, hitting bumps, sudden starts and stops are particularly risky driving situations for this type of accident. Training for the driver should include practice in gradual acceleration and deceleration. Increased knowledge of braking distances, including the effect of increased speed, tonnage, and grade on braking distance may be of benefit to drivers trying to reduce this hazard. It must be remembered that human beings require some amount of extra work surface space on which to move their feet in order to maintain balance. Thus larger steps will compensate for lurches or bumps while riding the step.

In 9 cases the employee fell from the step while riding the step. In two cases the step broke while the employee was riding the step. Broken or nearly broken steps can normally be detected with careful inspection. Many cities do not have a formalized method for inspecting vehicles, but wait until something breaks before sending the truck to maintenance. Careful and systematic inspection at regular

intervals is suggested. In one fall case the grab handle was wet and slippery from the rain. Employers should consider slip-resistant grab handles as well as steps.

In several of the riding step accidents, the truck was turning a corner. The situations in which the step is used should be reviewed carefully. It appears likely that employees tend to ride the step in precisely the most hazardous situations such as around corners, up hills, down streets where cars are parked, etc. Identification of the situations when a step should be ridden and should not be ridden is needed. For smaller crew sizes the feasibility of riding in the cab more often should be examined. Step design is important, but employers should recognize that riding the step is an inherently hazardous activity and should encourage employees to minimize the use of the step.

Accidents to employees getting on or off the step were of 4 main types: falls or trips from the step; falls or trips due to changes in surface next to the truck; striking against the step; striking against yard objects such as mail boxes. Accidents while getting off the step were far more frequent than those while getting on. Twenty-four employees fell or tripped while getting off the step and in over half of these cases the employee sprained his ankle. Five employees fell while getting on the step. In 7 of these cases excess haste was mentioned as the employee attempted to jump on or off while the truck was still moving (sometimes at speeds greater than 10 mph). One IRIS user has a reprimand system for employees caught jumping from moving steps. In two cases wet and slippery steps were specifically cited. One employee fell from the step while attempting to dump a container into the hopper while riding; another employee fell getting on the step when he tried to mount the step and set a container down at the same time.

Two employees fell due to stepping in holes as they got off the truck; in one case the ruts made by heavy equipment in a dirt alley were the cause. One employee slipped due to the wet grass next to truck, two due to stepping on rocks or bricks as they dismounted, two due to cracks in the pavement and two due to loose gravel.

Six employees slipped and struck against the side of the truck as they got on or off. Three employees ran into mailboxes, gas meters and sprinklers as they dismounted.

Countermeasures for "fall-from-step" type accidents must consider the size, shape and location of the steps and

handrails. The ANSI Z245.1 standard stipulates:

7.3.7 Riding Steps and Grab Handles

7.3.7.1 The surface and edges of steps shall have a slip-resistant surface. They shall be self-cleaning or be protected against the accumulation of mud, snow, and ice.

7.3.7.2 Steps shall be designed to carry a uniformly distributed load of not less than 1000 pounds.

7.3.7.3 If steps are provided, they shall be mounted not more than 22 inches above the road surface.

7.3.7.4 Steps shall have a depth of at least 8 inches and shall provide a minimum of 220 square inches of riding surface area.

7.3.7.5 Grab handles shall be provided in conjunction with riding steps and be located so as to provide the employee with a safe and comfortable riding stance. Each grab handle shall be capable of withstanding a pull of at least 500 pounds.

Many IRIS users have trucks with steps much smaller than 220 square inches or narrower than 8 inches. The size of the steps is often limited due to the width of the packer body and DOT regulations concerning the width of vehicles. One IRIS user has solved this problem by developing an extended step on which employees ride, which can be collapsed after dismounting so that the extra length does not interfere with dumping. This IRIS user has significantly reduced its fall from step injury rate.

Grab handles on many packers are often placed at the height of the rider when he is on the step, and are a little wider than a man's fists, so that employees literally have to grab for the handle. Long vertical bars are suggested which extend for several feet down the side of the truck where possible. This reduces the need for the employee to be looking up, instead of at his feet, when he mounts the truck. The grab handle design also provides support all the way down as the employee gets off the truck, and gives the employee a choice of hand placement so that he is less tempted to use the side of the hopper to find a comfortable holding space. Employers should carefully examine (perhaps with videotape)

exactly how employees use grab handles for riding and getting on and off. Specific modifications in handrails may become obvious with careful observation.

Drivers should be trained to stop at low risk locations. While it may not be possible to avoid ruts in the road, it should be possible to avoid stopping in front of mailboxes, the sides of driveways, trees, etc. For curbside pick-up, drivers should avoid stopping right in front of the cans. (Curbside pick-up normally has more "fall-from-step" accidents as the step is used more often.) For backyard pick-up, drivers should stop so as to encourage the employee to use walkways and driveways rather than the yard as these are normally smoother and do not have as many surprising holes.

One IRIS user has training sessions in how to mount or dismount the step and cab correctly. For example, employees are told to leave the cab facing the truck (as on a ladder, rather than facing outward) and holding onto a special handrail provided next to the cab door. Stepping out of the cab facing the truck makes it possible for the employee to examine his footing and hold the rail for support while dismounting. Many employees use the door instead of a grab rail for support (largely because they are facing outward); the door is unstable and its swinging action may precipitate a fall rather than avoid it. Twelve accidents occurred while getting out of the cab (none while getting in). In only 1 case was the employee dismounting facing the truck. Employers should have places where employees frequently leave the cab carefully inspected and cleaned. Three of the falls while dismounting the cab were due to employees leaving the cab in the city yard and slipping on the oil spills of previous trucks.

Other Falls

Falls and trips of all kinds, were the most frequent accident type amounting to 26% of the accidents, 34% of the workdays lost and 32% of the costs, and even exceeding overexertion accidents (18%) when falls from the step are included. Falls are so frequent that they have been divided into several categories: "falls from the step" (discussed above); "falls to a different level", which includes falls from the cab, and the curb; falls to the same level, which are falls where no change in level is involved; trips/slips/stumbles are falls in which the employee maintained his balance and did not hit the ground; and on/against/through objects are falls in which the employee fell and struck against an object other than the ground.

Altogether a total of 136 OSHA recordable accidents were reported this quarter that involved falls.

Many of the falls were due to winter weather conditions. Thirty-nine of the falls were due to ice or snow-covered surfaces, seven were due to falls on wet surfaces. Several of the falls on ice occurred while employees were carrying more than one can. Employees should be cautioned that balance is lessened while carrying heavy objects and should be instructed to carry smaller numbers of cans (with less weight) when working on icy surfaces. Many of the falls on ice were due to making a turning or twisting action (such as dumping) while carrying weight. The lack of traction meant that the employees kept turning and fell. Bending over was implicated in the same way. Ice causes containers to become frozen to the ground; one employee fell and seriously injured his knee as he attempted to jerk cans loose from the ground. Many users maintain that it is snow covered ice that is especially hazardous because it makes the icy surface difficult to recognize. Employees should be cautioned as to this hazard when working on newly fallen snow. Three employees fell on ice while walking down an incline. Usually falls occur more frequently in backyard collection as the employee spends more time walking and is exposed to the hazards in the yard and of changing surfaces. Some IRIS users maintain that the use of a wheeled cart is safer in these circumstances as it helps the employee to stablize his balance on icy surfaces. Wheeled carts do appear to have several other safety advantages compared to tote barrels when backyard collection is used.

The hazards of walking in the customer's yard compared to walking on the driveway or sidewalk should be examined carefully. Clearly when no ice is involved, the sidewalk or driveway is preferred. Customers' yards are more likely to have extra hazards of sprinklers, sewer holes (3 falls this quarter), changes in level covered over with grass, stairs, etc. Fourteen falls this quarter were due to objects or surface conditions in the yard. Under icy conditions, however, it is possible that the extra hazards in the yard are compensated for by the better traction of snow covered grass compared to ice covered driveways and walkways. More than half the ice related falls occurred on driveways and walkways this quarter. Further review of this problem is necessary. In any case, training in selecting the pathway to the container is recommended.

Ice and snow are responsible for several types of accidents besides falls. Four cases of frost bite were

reported this quarter. Several overexertion accidents were due to frozen waste and containers stuck to the ground. Vision and mobility are often impaired in snow conditions. Even though employees are familiar with snow hazards they may not consciously think of them until they are well into the season and have an accident or a near-miss. Special pre-snow safety sessions are suggested in which hazards and safety precautions for snow conditions are reviewed.

Seven of the falls occurred as the employee was stepping off the curb while carrying the container. Curbside collectors can easily misjudge the curb in frequent turning back and forth. Employees carrying containers to the curb often block their vision of the curb with the container. On the other hand, several falls occurred when the employee was hoisting the tote barrel up to his back or shoulder.

Fourteen of the falls occurred when the employee hoisted the can up to dump it into the hopper. In two cases the employee slipped on waste that had fallen in front of the hopper. Employees frequently fell when leaning over to give waste an extra push into the hopper. Employees should be cautioned <u>not</u> to use the hopper edge to balance themselves.

Several IRIS users have put considerable effort into selecting footwear that will decrease the chances of falls. One IRIS user issues a special shoe covering called "ice creepers". Another has worked on the problem of steel plated shoes becoming frozen in winter. High ankle shoes are often recommended to reduce twisted ankles especially while dismounting the step. Next quarter's ACCIDENT TRENDS report will feature a special on protective clothing and will discuss what IRIS users have done in this regard. In general, however, most IRIS users to date have been disappointed by "safety shoes" because they have been designed to reduce indoor hazards such as objects falling on top of the toe. A suitable outdoor safety shoe is one of the major safety appliance needs of the solid waste management industry. Employers should be cautioned against shoes with very high traction, such as cleats. Such shoes will prevent falls by keeping the employee's feet from slipping but an even greater hazard - twisted knees from starting to fall and not having the feet move may occur. This is a very serious hazard especially while carrying heavy weights. Knee injuries, whether to Joe Namath or Joe Collector, are often very difficult to repair.

In general the greatest hope for the immediate future against falls is training in walking and carrying

techniques that keep the body upright (i.e., keep the "center of mass" over the feet). Training in reducing the number of times when twisting, bending, pushing or other leaning forward stances are used is needed. Employees need to be trained to let containers go when they are about to fall so that their hands can be used for balance. Certain industries even train employees on how to fall safely. Normally employees must make a conscious effort to learn to walk and carry safely on slippery surfaces and must have practiced using the techniques before they will do them automatically.

Overexertion Accidents

Overexertion accidents (i.e., strains while lifting, dumping, pushing/pulling, etc.) especially to the back and while lifting were the second most frequent accident type. This type of accident amounted to 18% of the OSHA recordable accidents, 19% of the workdays lost, and 23% of the costs for the quarter. Back strains alone were the most frequent nature of injury (see FIGURE 4) amounting to 95 accidents, 910 of the workdays lost and $34,000 in costs.

Lifting was the most frequent activity associated with overexertion accidents. There were 59 lifting overexertion accidents reported this quarter. In about 3/4 of the cases the container was said to be extra heavy with weights reported up to 80 pounds. In all cases the can was full. In a few cases the employee was lifting more than one can. Most IRIS users tell employees to "get help" when containers are too heavy, but employees appear not to do this very often. When employees do get help they must know how to lift together to avoid injury. Special training and practice is needed to do this.

About 1/2 of the lifting accidents involved special heavy types of waste such as dirt, concrete, tree stumps, papers, wet garbage, large bags of fruit, etc. Several IRIS users train their employees to test the container before lifting it. This can be done by bumping the container with the knee or hand near the bottom and estimating relative weight by how much the container rocks. Often customers place the heavier items on the bottom of the container so that the employee is misled in judging weight by just looking at the container contents. Bumping the container to test it is a more effective method. Bumping the container also tells the employee whether the container is frozen to the ground and enables the employee to identify containers that are loosely packed. Often it is the shift of materials within the containers as they are lifted that causes overexertion accidents. In only a few lifting accidents did the employee test the container; most found out it was heavy by lifting it!

Many cities have container regulations but often they are not enforced. Container regulations should include weight and size limitations, regulations on the condition of the container, regulations on acceptable items to put in the container and how to handle unacceptable items, regulations on the location of the container, and the requirement for lids. (Employees should be trained to assume that containers found without lids after a rainy night or after heavy dew are water filled and therefore very heavy). Containers not meeting city rules should be tagged and left rather than picked up. Many sanitation divisions are forced by the cries of city councilmen (echoing the cries of citizens) to pick up any and all containers thus making enforcement of container regulations impossible. Public education programs must therefore accompany issuance or changes in enforcement of container regulations. One IRIS user has found public education programs to be effective.

Besides weight of container, 10 accidents reported this quarter involved poor condition of the container (ragged edges, broken handles, etc.). One back injury involved lifting a container out of a hole in the ground. Certain cities allow this practice; it almost certainly increases the risk of back injury and if possible should be prohibited in container regulations. Approximately 20 accidents reported involved being hurt by waste that was inadequately wrapped or bundled. Container regulations should specify how citizens should handle glass, razors, chemicals like clorox and battery acid, etc. Shrubbery regulations should require bundling. Certain shrubbery such as palm fronds are especially hazardous and special regulations may be required. Container regulations should prohibit the use of 55 gallon drums. The optimum weight regulation is not known at this time. The effect of weight depends in part on complex relationships such as the ratio of height of the hopper to the height of the employee. Weights over 30 pounds are frequently hazardous if handled improperly. Some cities have weight regulations as high as 100 pounds. Most cities which have weight regulations specify between 60 and 80 pounds.

Much misunderstanding and mistrust between employer and employees has arisen over back injuries. While it is true that there are employees who fake back injuries it should also be remembered that: (1) a back injury <u>can</u> be real and not show up on an x-ray; (2) back injuries can develop <u>over time</u> with repeated exertion so that the employee may genuinely not be able to cite a specific accident which injured his back (7 accidents of this type were reported this quarter). Employers in some industries have successfully tried rotating activities of employees every hour to reduce long term over-

exertion accidents. Switching the driver may be useful); (3) for certain types of back injuries, once an employee has sustained a back injury he is physically more likely to have others, so that an employee may in fact have a series of back injuries without being "accident prone".

Not many hard and fast countermeasures can be offered at present for back injuries. Most involve training. Employees must be trained to lift properly.

The most important modern rule for lifting is to keep the item close to the body (the old rule about keeping the back straight is valid precisely because it helps keep the item close to the body). Employees should be taught not to jerk up containers but to lift them steadily (most people will not lift steadily unless trained to do so; the heavier the object the more people tend to want to jerk it up).

Employees should be trained to avoid twisting or turning actions when lifting. Twenty of the overexertion accidents involved dumping the containers. Employees frequently lifted the container from the curb and twisted around to dump, all in one motion. Training on dumping should be emphasized (most training sessions only cover lifting). Employees, especially on curbside crews, should be taught to lift the container, turn (including moving the feet), and then dump, not dump-and-turn at once. An additional 11 overexertion accidents were the result of trying to catch a container that had started to slip from their hands while dumping. Employees should be taught to "let the container go" if it starts to slip. Another 5 overexertion accidents occurred when the employee was jerking a large or stuck container back out of the hopper. Jerking action is to be avoided in lifting activities.

In 18 dumping accidents, waste flew back out while the employee was dumping it and the employee jerked or fell to avoid being hit. Employees should be cautioned about the hazard of placing exceptionally long objects in the hopper. One employee was seriously injured when he leaped to avoid being hit by a long board that started to swing around after the packing blade was started. Many employees hold the container high in the air when dumping to get refuse out faster. This practice increases the chance of being hit by objects flying back after dumping and probably increases the risk of back strain. Employees should be trained to turn their head to the side when dumping to protect their eyes from waste flying back.

Plastic Bags

Plastic bags probably reduce the risk of overexertion accidents because there is a limited amount of weight that can be placed in a bag. Only 3 overexertion accidents occurred while handling bags. All 3 were the result of throwing and twisting at the same time. Employees should be taught to pick up, carry and carefully place plastic bags rather than twisting around and throwing bags into the hopper while remaining at the curb.

Nineteen accidents this quarter involved being cut by sharp objects, usually glass, penetrating plastic bags. Most of these occurred to the employees legs, especially if he was swinging the bag back and forth as he carried it. "Chaps" on the sides of the trousers are used by one IRIS user to prevent this type of injury and cities collecting all or nearly all plastic bags should consider the use of chaps. However, in order to gain employee acceptance, chaps must be designed so as to avoid being overly cumbersome or hot. Nylon ballistic pads are used in some industries. Because of the hazard of hypodermic needles in hospital or doctor's office waste, it may be advisable to discourage the use of plastic bags for these customers.

Vehicle Accidents

For the first time since the development of IRIS, large numbers of vehicle accidents were reported. IRIS only covers personal injury accidents so that vehicle accidents involving only property damage are not reported to IRIS. Until this quarter only a handful of personal injury accidents were reported. This quarter 40 employees were injured, several very seriously, in 24 vehicle accidents. One employee was hit by a car in crossing the street to pick up containers. The practice of collecting refuse from both sides of the street is especially subject to traffic accident hazards because the employee frequently crosses the street and because the truck often partially blocks traffic. This practice is discouraged. Seven employees were injured in snowplow vehicle accidents; most occurred when the snowplow knocked against the curbing. In two vehicle accidents, alcohol involvement is suspected of the employee/driver.

One IRIS user has instituted a special program to test and train employees about braking distance and how it is affected by increased speed, tonnage, and grade. It was recognized that employees were using their brakes while getting to the route and then driving along at curb speed while collecting without using their brakes very often. Meanwhile the tonnage,

and therefore the braking distance was increasing often unbeknownst to the driver. When riding to the landfill the brakes were again used but the doubled weight meant that the braking distance required has doubled. Many employees had failed to recognize the difference in braking distance between going to the route and coming from the route and were not adjusting their driving habits accordingly. The training program was started to combat this problem. After the brake training program was instituted, which included pre- and post-training tests, the number of brake failure related accidents dropped from 10 a year to zero for this user.

Animal Accidents

Seven accidents reported this quarter involved animal bites. One employee was bitten while petting a dog. Employees should be instructed not to touch animals. Four additional employees sustained falls or strains in trying to outrun or jump away from a dog, or in one case, a cat. Normally it is best to walk away from animals; running tends to encourage chase.

One animal injury this quarter could probably take the prize for being unusual. A driver was stopped at the curb for container pick-up, when he was bit on the finger by a monkey who "hopped into the cab unexpectedly" (no kidding!) It is perhaps only marginally worth mentioning that the employee was not wearing safety gloves at the time.

Preliminary Task/Hazard Analysis

The information on hazards and countermeasures has been systematically compiled and placed in chart form in TABLE A. It is believed that training programs and other countermeasures can be more effectively developed if hazards data is organized around the tasks the employee is performing. Accordingly a preliminary effort to analyze the hazards of the solid waste management industry by task has been started. Only actual hazards which resulted in injuries this quarter are included (i.e., no hypothetical hazards). No attempt has been made in this preliminary effort to cover every task or every hazard. The countermeasures described in detail in the text are summarized in the TABLE. It is the intention of IRIS to continue to refine the Preliminary Task/Hazard Analysis as more data is received. Comments from IRIS users are welcomed. Some IRIS users may wish to use the task analysis format for evaluating their own injuries.

FIGURE 2

ALL USERS
PROFILE OF ACCIDENTS
BY ACCIDENT TYPE AND ACTIVITY

REPORTING PERIOD: JANUARY - MARCH 1976

THIS PROFILE IS A FORMATTED SENTENCE CONSISTING OF ACCIDENT TYPE AND ACTIVITY.

PROFILE	NO. INJ	WKDYS LOST	DIRECT COSTS
STRUCK BY VEHICLE PART WHILE OPERATING PACKING MECHANISMS	1	0	20
STRUCK BY VEHICLE PART WHILE EMPTYING VEHICLE/PACKER	2	0	0
STRUCK BY VEHICLE PART WHILE DRIVING/OPERATING EQUIP	3	28	1,505
STRUCK BY VEHICLE PART WHILE RIDING IN CAB	1	9	585
STRUCK BY VEHICLE PART WHILE STANDING/WALKING	1	0	30
STRUCK BY VEHICLE PART WHILE CARRYING CONTAINER	1	21	434
STRUCK BY VEHICLE PART WHILE GETTING OUT OF CAB	1	0	72
STRUCK BY VEHICLE PART WHILE REPAIRING/MAINTAINING VEHICLE	2	0	20
STRUCK AGAINST VEHICLE WHILE GETTING OFF STEP	1	12	82
STRUCK AGAINST VEHICLE WHILE DUMPING CONTAINER INTO HOPPER	8	94	1,623
STRUCK AGAINST VEHICLE WHILE RIDING ON STEP	7	24	2,193
STRUCK AGAINST VEHICLE	2	4	132
STRUCK AGAINST VEHICLE WHILE GETTING ON STEP	2	21	427
STRUCK AGAINST VEHICLE WHILE PUSHING/PULLING CONTAINER	2	4	148
STRUCK AGAINST VEHICLE WHILE RIDING IN CAB	3	20	1,076
STRUCK AGAINST VEHICLE WHILE DRIVING/OPERATING EQUIP	2	3	100
STRUCK AGAINST VEHICLE WHILE CARRYING UNCONTAINERIZED WASTE	1	0	20
STRUCK AGAINST VEHICLE WHILE RIDING IN TRUCK BED	2	0	0
STRUCK AGAINST VEHICLE WHILE THROWING/CATCHING	1	3	153
STRUCK AGAINST VEHICLE WHILE CARRYING CONTAINER	1	0	20
STRUCK AGAINST VEHICLE WHILE REPAIRING/MAINTAINING VEHICLE	1	0	20
STRUCK AGAINST VEHICLE WHILE LIFTING UNCONTAINERIZED WASTE	1	1	81
STRUCK AGAINST VEHICLE WHILE DUMPING UNCONT WASTE INTO OTHER	1	3	95
STRUCK AGAINST VEHICLE WHILE STANDING/WALKING	3	6	101
STRUCK AGAINST VEHICLE WHILE OPERATING PACKING MECHANISMS	1	0	48
STRUCK BY OBJECT WHILE DRIVING/OPERATING EQUIP	2	10	412
STRUCK BY OBJECT WHILE STANDING/WALKING	8	14	3,060
STRUCK BY OBJECT WHILE GETTING IN CAB	1	0	30
STRUCK BY OBJECT WHILE THROWING/CATCHING	5	48	1,081
STRUCK BY OBJECT WHILE LIFTING UNCONTAINERIZED WASTE	1	0	20
STRUCK BY OBJECT WHILE CARRYING CONTAINER	1	1	37
STRUCK BY OBJECT WHILE DUMPING CONTAINER INTO HOPPER	7	10	463
STRUCK BY OBJECT WHILE PUSHING/PULLING CONTAINER	4	0	109
STRUCK BY OBJECT WHILE RIDING ON STEP	2	0	0
STRUCK BY OBJECT WHILE DUMPING UNCONTAINERIZED WASTE INTO HOPPER	5	3	253
STRUCK BY OBJECT	1	10	335
STRUCK BY OBJECT WHILE LIFTING CONTAINER	1	12	524
STRUCK BY OBJECT WHILE OPERATING PACKING MECHANISMS	1	0	45
STRUCK BY OBJECT WHILE REPAIRING/MAINTAINING VEHICLE	1	2	135
STRUCK BY OBJECT WHILE RIDING IN CAB	1	34	700

FIGURE 2 (cont.)

PROFILE	NO. INJ	WKDYS LOST	DIRECT COSTS
STRUCK BY OBJECT WHILE USING HAND TOOLS	1	6	428
STRUCK AGAINST OBJECT WHILE PUSHING/PULLING CONTAINER	3	15	221
STRUCK AGAINST OBJECT WHILE LIFTING CONTAINER	2	0	40
STRUCK AGAINST OBJECT WHILE GETTING OFF STEP	1	0	42
STRUCK AGAINST OBJECT WHILE DUMPING CONTAINER INTO HOPPER	1	1	72
STRUCK AGAINST OBJECT WHILE RIDING ON STEP	1	0	45
STRUCK AGAINST OBJECT	1	0	30
OBJECT IN EYES WHILE DRIVING/OPERATING EQUIP	6	7	671
OBJECT IN EYES WHILE DUMPING CONTAINER INTO HOPPER	10	50	1,196
OBJECT IN EYES WHILE OPERATING PACKING MECHANISMS	5	3	300
OBJECT IN EYES WHILE STANDING/WALKING	4	2	200
OBJECT IN EYES WHILE OPERATING OTHER CONTROLS	2	1	238
OBJECT IN EYES WHILE WASHING EQUIP	2	0	54
OBJECT IN EYES WHILE DUMPING CONTAINER INTO TUB/CART	1	3	20
OBJECT IN EYES WHILE GETTING OUT OF CAB	1	0	20
OBJECT IN EYES WHILE REPAIRING/MAINTAINING VEHICLE	2	0	40
OBJECT IN EYES WHILE LIFTING UNCONTAINERIZED WASTE	1	1	115
OBJECT IN EYES WHILE RIDING ON STEP	3	0	69
OBJECT IN EYES WHILE DUMPING UNCONTAINERIZED WASTE INTO HOPPER	3	3	270
OBJECT IN EYES WHILE RIDING IN TRUCK BED	1	0	20
OBJECT IN EYES WHILE USING HAND TOOLS	2	0	40
OBJECT IN EYES WHILE DUMPING UNCONT WASTE INTO OTHER	1	2	85
OBJECT IN EYES WHILE LIFTING CONTAINER	2	0	45
OBJECT IN EYES WHILE GUIDING/DIRECTING VEHICLE	1	2	81
HURT BY OBJECT HANDLED WHILE LIFTING CONTAINER	20	171	6,635
HURT BY OBJECT HANDLED WHILE THROWING/CATCHING	4	6	293
HURT BY OBJECT HANDLED WHILE DUMPING UNCONTAINERIZED WASTE INTO HOPPER	1	0	90
HURT BY OBJECT HANDLED WHILE LIFTING UNCONTAINERIZED WASTE	3	0	43
HURT BY OBJECT HANDLED WHILE CARRYING CONTAINER	4	58	1,615
HURT BY OBJECT HANDLED WHILE USING HAND TOOLS	1	0	37
HURT BY OBJECT HANDLED	2	0	54
HURT BY OBJECT HANDLED WHILE DUMPING OTHER INTO HOPPER	1	0	15
HURT BY OBJECT HANDLED WHILE DUMPING CONTAINER INTO HOPPER	10	33	1,435
HURT BY OBJECT HANDLED WHILE DUMPING CONTAINER INTO TUB/CART	2	2	40
HURT BY OBJECT HANDLED WHILE REPAIRING/MAINTAINING VEHICLE	1	0	45
HURT BY OBJECT HANDLED WHILE DUMPING CONTAINER INTO OTHER	1	0	47
HURT BY OBJECT HANDLED WHILE PUSHING/PULLING WASTE IN/OUT CONTAINER	1	0	75
HURT BY OBJECT HANDLED WHILE CLEARING	1	0	0
HURT BY OBJECT HANDLED WHILE PUSHING/PULLING CONTAINER	1	0	20
HURT BY OBJECT HANDLED WHILE LIFTING OTHER	1	1	59
HURT BY OBJECT HANDLED WHILE NO SPECIFIC ACT	1	0	20
HURT BY OBJECT HANDLED WHILE CARRYING UNCONTAINERIZED WASTE	1	0	20
FALL TO DIFFERENT LEVEL WHILE STANDING/WALKING	5	109	5,189
FALL TO DIFFERENT LEVEL WHILE CARRYING CONTAINER	6	62	1,183

PROFILE	NO. INJ	WKDYS LOST	DIRECT COSTS
FALL TO DIFFERENT LEVEL WHILE LIFTING CONTAINER	1	12	471
FALL TO DIFFERENT LEVEL WHILE PUSHING/PULLING CONTAINER	2	8	411
FALL TO DIFFERENT LEVEL WHILE GETTING OUT OF CAB	5	61	3,958
FALL TO DIFFERENT LEVEL	1	7	265
FALL TO DIFFERENT LEVEL WHILE GETTING IN CAB	1	3	80
FALL TO DIFFERENT LEVEL WHILE DUMPING OTHER INTO HOPPER	1	4	143
FALL TO DIFFERENT LEVEL WHILE PUSHING/PULLING WASTE IN/OUT CONTAINER	1	1	56
FALL TO DIFFERENT LEVEL WHILE RIDING IN HOPPER	1	19	1,784
FALL FROM STEP WHILE GETTING OFF STEP	24	269	7,034
FALL FROM STEP WHILE GETTING ON STEP	5	25	2,729
FALL FROM STEP WHILE RIDING ON STEP	11	82	2,011
FALL FROM STEP WHILE DUMPING CONTAINER INTO HOPPER	1	5	22
FALL TO SAME LEVEL WHILE PUSHING/PULLING CONTAINER	6	51	2,365
FALL TO SAME LEVEL WHILE EMPTYING VEHICLE/PACKER	1	0	53
FALL TO SAME LEVEL WHILE STANDING/WALKING	15	219	6,476
FALL TO SAME LEVEL WHILE DUMPING UNCONT WASTE INTO OTHER	1	0	67
FALL TO SAME LEVEL WHILE DUMPING CONTAINER INTO HOPPER	8	14	363
FALL TO SAME LEVEL WHILE CARRYING CONTAINER	8	53	2,401
FALL TO SAME LEVEL WHILE USING HAND TOOLS	1	3	183
FALL TO SAME LEVEL WHILE LIFTING CONTAINER	2	0	20
FALL TO SAME LEVEL WHILE GETTING OUT OF CAB	1	15	626
FALL TO SAME LEVEL WHILE PUSHING WASTE BACK INTO HOPPER	1	38	2,260
TRIP/STUMBLE/SLIP WHILE CARRYING CONTAINER	7	14	699
TRIP/STUMBLE/SLIP WHILE GETTING OUT OF CAB	5	27	447
TRIP/STUMBLE/SLIP WHILE EMPTYING VEHICLE/PACKER	2	0	54
TRIP/STUMBLE/SLIP WHILE PUSHING/PULLING CONTAINER	6	30	1,403
TRIP/STUMBLE/SLIP WHILE STANDING/WALKING	6	65	2,369
TRIP/STUMBLE/SLIP WHILE DUMPING CONTAINER INTO HOPPER	4	12	1,042
TRIP/STUMBLE/SLIP WHILE LIFTING CONTAINER	4	9	339
TRIP/STUMBLE/SLIP WHILE GETTING IN CAB	3	14	528
TRIP/STUMBLE/SLIP WHILE DUMPING CONTAINER INTO TUB/CART	1	1	70
TRIP/STUMBLE/SLIP WHILE LIFTING UNCONTAINERIZED WASTE	2	4	190
TRIP/STUMBLE/SLIP WHILE GETTING OFF STEP	1	6	306
BODILY REACTION WHILE DRIVING/OPERATING EQUIP	5	31	1,912
BODILY REACTION WHILE USING HAND TOOLS	1	0	40
BODILY REACTION WHILE PUSHING/PULLING CONTAINER	2	3	40
BODILY REACTION	1	3	128
BODILY REACTION WHILE HOOKING/UNHOOKING TRAILER	1	28	426
BODILY REACTION WHILE RIDING IN CAB	1	1	52
BODILY REACTION WHILE LIFTING CONTAINER	2	6	283
BODILY REACTION WHILE DUMPING CONTAINER INTO HOPPER	2	6	373
BODILY REACTION WHILE LIFTING OTHER	1	2	200
OVEREXERTION WHILE LIFTING CONTAINER	59	435	23,369
OVEREXERTION WHILE DUMPING CONTAINER INTO HOPPER	9	37	1,636

FIGURE 2 (cont.)

PROFILE	NO. INJ	WKDYS LOST	DIRECT COSTS
OVEREXERTION WHILE EMPTYING VEHICLE/PACKER	1	7	60
OVEREXERTION WHILE OPERATING PACKING MECHANISMS	1	3	191
OVEREXERTION WHILE CLEARING	1	0	103
OVEREXERTION WHILE LIFTING OTHER	3	7	378
OVEREXERTION WHILE CARRYING CONTAINER	5	23	693
OVEREXERTION WHILE PUSHING/PULLING OTHER	3	65	2,500
OVEREXERTION WHILE THROWING/CATCHING	1	7	100
OVEREXERTION WHILE PUSHING/PULLING CONTAINER	5	63	4,833
OVEREXERTION WHILE DUMPING CONTAINER INTO TUB/CART	2	0	40
OVEREXERTION WHILE GETTING ON STEP	1	0	20
OVEREXERTION WHILE LIFTING UNCONTAINERIZED WASTE	3	32	692
OVEREXERTION WHILE DUMPING UNCONTAINERIZED WASTE INTO HOPPER	1	1	128
CAUGHT IN PACKER WHILE PUSHING WASTE BACK INTO HOPPER	3	37	7,249
CAUGHT IN PACKER WHILE STANDING/WALKING	1	0	0
CAUGHT IN PACKER WHILE RIDING IN HOPPER	2	86	2,258
CAUGHT IN PACKER	1	2	91
CAUGHT BETWEEN OR UNDER WHILE PUSHING/PULLING CONTAINER	6	0	205
CAUGHT BETWEEN OR UNDER WHILE OPERATING PACKING MECHANISMS	2	44	1,553
CAUGHT BETWEEN OR UNDER	1	2	104
CAUGHT BETWEEN OR UNDER WHILE RIDING ON STEP	1	43	3,199
CONTACT WITH TEMP EXTREME WHILE NO SPECIFIC ACT	4	3	213
CONTACT WITH TEMP EXTREME WHILE REPAIRING/MAINTAINING VEHICLE	1	11	73
CONTACT WITH TEMP EXTREME WHILE WASHING EQUIP	1	0	0
CONTACT WITH CAUSTIC/TOXIC/NOXIOUS SUBSTANCE WHILE DUMPING CONTAINER INTO HOPPER	3	80	1,690
CONTACT WITH CAUSTIC/TOXIC/NOXIOUS SUBSTANCE WHILE NO SPECIFIC ACT	2	10	482
CONTACT WITH CAUSTIC/TOXIC/NOXIOUS SUBSTANCE WHILE OPERATING PACKING MECHANISMS	1	1	59
CONTACT WITH CAUSTIC/TOXIC/NOXIOUS SUBSTANCE WHILE DRIVING/OPERATING EQUIP	1	0	0
CONTACT WITH CAUSTIC/TOXIC/NOXIOUS SUBSTANCE WHILE CLEARING	1	0	0
CONTACT WITH CAUSTIC/TOXIC/NOXIOUS SUBSTANCE WHILE REPAIRING/MAINTAINING VEHICLE	1	14	780
CONTACT WITH CAUSTIC/TOXIC/NOXIOUS SUBSTANCE WHILE STANDING/WALKING	1	1	89
INSECT BITE WHILE LIFTING UNCONTAINERIZED WASTE	1	0	15
ANIMAL BITE WHILE DRIVING/OPERATING EQUIP	1	0	71
ANIMAL BITE WHILE DUMPING CONTAINER INTO TUB/CART	1	0	20
ANIMAL BITE WHILE LIFTING CONTAINER	2	5	248
ANIMAL BITE WHILE PUSHING/PULLING CONTAINER	1	0	20
ANIMAL BITE WHILE DUMPING CONTAINER INTO HOPPER	1	0	20
ANIMAL BITE	1	0	64
STEP ON SHARP OBJECT WHILE CLEARING	1	0	24

PROFILE	NO. INJ	WKDYS LOST	DIRECT COSTS
STEP ON SHARP OBJECT WHILE STANDING/WALKING	2	1	106
STEP ON SHARP OBJECT WHILE EMPTYING VEHICLE/PACKER	1	0	110
STEP ON SHARP OBJECT	2	4	254
AGGRESSIVE ACT WHILE STANDING/WALKING	2	4	297
AGGRESSIVE ACT WHILE GUIDING/DIRECTING VEHICLE	1	6	412
AGGRESSIVE ACT WHILE AGGRESSIVE ACT	1	2	72
DERMATITIS WHILE NO SPECIFIC ACT	1	0	18
DERMATITIS WHILE DUMPING UNCONTAINERIZED WASTE INTO HOPPER	1	1	45
DERMATITIS WHILE JANITORIAL WORK	1	0	10
NO SPECIFIC ACCIDENT WHILE NO SPECIFIC ACT	4	95	3,320
NO SPECIFIC ACCIDENT WHILE WASHING EQUIP	1	0	20
DROPPED OBJECT ON SELF WHILE LIFTING CONTAINER	4	29	1,076
DROPPED OBJECT ON SELF WHILE DUMPING CONTAINER INTO TUB/CART	2	4	227
DROPPED OBJECT ON SELF WHILE DUMPING CONTAINER INTO HOPPER	2	4	207
DROPPED OBJECT ON SELF WHILE CARRYING CONTAINER	1	1	72
DROPPED OBJECT ON SELF WHILE PUSHING/PULLING OTHER	1	0	20
DROPPED OBJECT ON SELF WHILE CARRYING OTHER	1	1	58
DROPPED OBJECT ON SELF WHILE DUMPING UNCONTAINERIZED WASTE INTO HOPPER	1	0	36
DROPPED OBJECT ON SELF WHILE HOOKING/UNHOOKING TRAILER	1	2	99
STRUCK BY VEHICLE WHILE RIDING IN CAB	10	145	3,309
STRUCK BY VEHICLE WHILE DRIVING/OPERATING EQUIP	9	212	4,340
STRUCK BY VEHICLE WHILE STANDING/WALKING	2	15	736
STRUCK BY VEHICLE WHILE CLEARING	1	0	0
STRUCK BY VEHICLE WHILE DUMPING CONTAINER INTO HOPPER	1	0	20
STRUCK BY VEHICLE WHILE LIFTING UNCONTAINERIZED WASTE	1	32	660
FELL ON/AGAINST/THROUGH OBJECT WHILE STANDING/WALKING	2	0	20
FELL ON/AGAINST/THROUGH OBJECT WHILE CARRYING CONTAINER	1	6	286
FELL ON/AGAINST/THROUGH OBJECT WHILE GETTING OUT OF CAB	1	0	52
FELL ON/AGAINST/THROUGH OBJECT WHILE LIFTING CONTAINER	1	2	104
FELL ON/AGAINST/THROUGH OBJECT WHILE REPAIRING/MAINTAINING VEHICLE	1	0	45
FLASH BURN WHILE REPAIRING/MAINTAINING VEHICLE	1	0	25
UNKNOWN	5	6	408
	1	3	125

FIGURE 3

ALL USERS
PROFILE OF ACCIDENTS
BY NATURE OF INJURY AND PART OF BODY

REPORTING PERIOD: JANUARY - MARCH 1976

THIS PROFILE IS A FORMATTED SENTENCE CONSISTING OF PART OF BODY AND NATURE OF INJURY.

PROFILE	NO. INJ	WKDYS LOST	DIRECT COSTS
AMPUTATION INJURING ARM	1	25	6,877
ANIMAL BITE INJURING FINGERS	1	0	71
ANIMAL BITE INJURING LEG	3	3	186
ANIMAL BITE INJURING ANKLE	1	2	102
ANIMAL BITE INJURING TRUNK	1	0	20
ANIMAL BITE INJURING CHEST/RIBS	1	0	64
INSECT BITE INJURING ARM	1	0	15
BRUISE/CONTUSION/CRUSHING INJURING HAND	8	74	1,835
BRUISE/CONTUSION/CRUSHING INJURING HIPS	8	36	1,652
BRUISE/CONTUSION/CRUSHING INJURING CHEST/RIBS	10	85	3,858
BRUISE/CONTUSION/CRUSHING INJURING KNEE	18	28	1,193
BRUISE/CONTUSION/CRUSHING INJURING FOOT	7	30	1,388
BRUISE/CONTUSION/CRUSHING INJURING ELBOW	11	12	601
BRUISE/CONTUSION/CRUSHING INJURING BACK	6	64	4,311
BRUISE/CONTUSION/CRUSHING INJURING ARM	3	11	316
BRUISE/CONTUSION/CRUSHING INJURING FINGERS	12	31	1,584
BRUISE/CONTUSION/CRUSHING INJURING SKULL	2	34	720
BRUISE/CONTUSION/CRUSHING INJURING LEG	12	77	1,837
BRUISE/CONTUSION/CRUSHING INJURING ANKLE	5	25	1,303
BRUISE/CONTUSION/CRUSHING INJURING SCALP	6	9	502
BRUISE/CONTUSION/CRUSHING INJURING SHOULDER	12	75	3,341
BRUISE/CONTUSION/CRUSHING INJURING GENITALIA/GROIN	2	1	67
BRUISE/CONTUSION/CRUSHING INJURING MULTIPLE TYPES OF INJURY	1	12	2,327
BRUISE/CONTUSION/CRUSHING INJURING TOES	5	70	904
BRUISE/CONTUSION/CRUSHING INJURING WRIST	1	0	57
BRUISE/CONTUSION/CRUSHING INJURING NOSE	2	9	274
BRUISE/CONTUSION/CRUSHING INJURING EYES	3	42	931
BRUISE/CONTUSION/CRUSHING INJURING FACE	2	5	250
BRUISE/CONTUSION/CRUSHING INJURING JAW	1	0	47
BRUISE/CONTUSION/CRUSHING INJURING MULTIPLE PARTS OF BODY	2	59	3,481
BRUISE/CONTUSION/CRUSHING INJURING FOREHEAD	2	1	87
BRUISE/CONTUSION/CRUSHING INJURING THUMB	1	0	45
BRUISE/CONTUSION/CRUSHING INJURING NECK	1	0	33
BRUISE/CONTUSION/CRUSHING INJURING CHEEK	1	0	20
HEAT BURN/SCALD INJURING EYES	1	0	25
HEAT BURN/SCALD INJURING FACE	1	11	73
HEAT BURN/SCALD INJURING ARM	1	0	20

PROFILE	NO. INJ	WKDYS LOST	DIRECT COSTS
HEAT BURN/SCALD INJURING ABDOMEN	1	0	0
CHEMICAL BURN INJURING EYES	2	1	111
CHEMICAL BURN INJURING ABDOMEN	1	74	1,476
CONCUSSION INJURING SKULL	1	77	993
CONCUSSION INJURING FOREHEAD	1	2	77
CUT/LACERATION/PUNCTURE INJURING FINGERS	13	99	4,961
CUT/LACERATION/PUNCTURE INJURING EYES	4	1	287
CUT/LACERATION/PUNCTURE INJURING LEG	16	118	3,328
CUT/LACERATION/PUNCTURE INJURING FOREHEAD	2	0	20
CUT/LACERATION/PUNCTURE INJURING FOOT	8	6	552
CUT/LACERATION/PUNCTURE INJURING JAW	1	3	183
CUT/LACERATION/PUNCTURE INJURING WRIST	4	6	368
CUT/LACERATION/PUNCTURE INJURING HAND	13	26	858
CUT/LACERATION/PUNCTURE INJURING HIPS	2	0	35
CUT/LACERATION/PUNCTURE INJURING ANKLE	1	20	668
CUT/LACERATION/PUNCTURE INJURING FACE	3	7	212
CUT/LACERATION/PUNCTURE INJURING CHEEK	2	0	20
CUT/LACERATION/PUNCTURE INJURING KNEE	3	7	285
CUT/LACERATION/PUNCTURE INJURING THUMB	2	0	0
CUT/LACERATION/PUNCTURE INJURING SCALP	3	16	767
CUT/LACERATION/PUNCTURE INJURING SHOULDER	1	0	27
CUT/LACERATION/PUNCTURE INJURING EARS	1	0	45
CUT/LACERATION/PUNCTURE INJURING ARM	3	12	412
DERMATITIS/RASH INJURING GENITALIA/GROIN	1	0	18
DERMATITIS/RASH INJURING HAND	2	7	237
DERMATITIS/RASH INJURING ARM	4	1	92
DISLOCATION INJURING BACK	1	5	605
OBJECT IN EYE INJURING EYES	50	89	4,346
FRACTURE INJURING SKULL	1	107	1,090
FRACTURE INJURING ANKLE	1	23	308
FRACTURE INJURING ARM	1	0	0
FRACTURE INJURING FINGERS	5	5	392
FRACTURE INJURING THUMB	1	24	1,280
FRACTURE INJURING FOOT	2	97	2,052
FRACTURE INJURING CHEST/RIBS	1	3	197
FREEZING/FROSTBITE/OTHER LOW TEMPERATURE INJURING FINGERS	4	3	213
HERNIA/RUPTURE INJURING GENITALIA/GROIN	1	36	3,746
INFLAMED JOINTS/TENDONS/MUSCLES INJURING HIPS	1	4	239
INFLAMED JOINTS/TENDONS/MUSCLES INJURING LEG	1	5	22
NOSEBLEED INJURING NOSE	2	3	148
SCRATCHES/ABRASIONS INJURING EYES	4	7	2,752
SCRATCHES/ABRASIONS INJURING EARS	2	0	30

FIGURE 3 (cont.)

PROFILE	NO. INJ	WKDYS LOST	DIRECT COSTS
SCRATCHES/ABRASIONS INJURING LEG	1	38	729
SCRATCHES/ABRASIONS INJURING ARM	1	0	20
SCRATCHES/ABRASIONS INJURING HIPS	1	0	0
SCRATCHES/ABRASIONS INJURING ELBOW	1	0	20
SPRAIN/STRAIN INJURING SHOULDER	18	83	8,466
SPRAIN/STRAIN INJURING THUMB	3	59	1,336
SPRAIN/STRAIN INJURING KNEE	9	44	1,471
SPRAIN/STRAIN INJURING BUTTOCKS	1	3	177
SPRAIN/STRAIN INJURING BACK	95	910	34,389
SPRAIN/STRAIN INJURING ANKLE	41	303	10,050
SPRAIN/STRAIN INJURING HIPS	3	9	246
SPRAIN/STRAIN INJURING TRUNK	3	24	485
SPRAIN/STRAIN INJURING NECK	11	141	3,673
SPRAIN/STRAIN INJURING ARM	5	14	782
SPRAIN/STRAIN INJURING ABDOMEN	3	10	502
SPRAIN/STRAIN INJURING GENITALIA/GROIN	7	23	506
SPRAIN/STRAIN INJURING INTERNAL ORGANS	1	18	854
SPRAIN/STRAIN INJURING ELBOW	1	5	195
SPRAIN/STRAIN INJURING WRIST	7	54	4,226
SPRAIN/STRAIN INJURING FOOT	3	2	149
SPRAIN/STRAIN INJURING FINGERS	4	33	77
SPRAIN/STRAIN INJURING CHEST/RIBS	2	38	3,297
SPRAIN/STRAIN INJURING LEG	2	19	844
SPRAIN/STRAIN INJURING HAND	1	0	20
POISONING INJURING INTERNAL ORGANS	3	10	482
TORN CARTILAGE INJURING KNEE	1	15	664
INJURING MULTIPLE PARTS OF BODY	1	43	1,902
UNKNOWN	5	14	809
UNKNOWN	1	0	25
INJURING BACK	3	10	424
INJURING FACE	1	4	98
INJURING LEG	2	18	823
INJURING TOES	1	4	154
INJURING ELBOW	1	3	125
INJURING SHOULDER	1	1	56
INJURING FINGERS	1	3	20
INJURING HAND	1	0	20

PRELIMINARY TASK/HAZARD ANALYSIS

TASK	HAZARDS	SUMMARY OF POSSIBLE COUNTERMEASURE(S)
Dumping into Hopper	Hopper Ejecting Materials	"Flaps." Turning head when dumping. Reducing time spent behind packer. Eye protection.
	Falls Against Hopper	Pick up waste in front of hopper as soon as it has fallen. Avoid leaning over or twisting actions while dumping. Avoid the quick jerk hoisting action.
	Overexertion	Avoid twisting while dumping. Avoid jerking the container up to dump--slow steady lift is best. Train employees to let falling containers go and not try to catch containers that slip out of their hands.
	Waste Flying Back After Dumping--Swinging of Long Items	Careful placing of waste. Avoid holding container high in air. Turn head while dumping.

TABLE A (cont.)

PRELIMINARY TASK/HAZARD ANALYSIS

TASK	HAZARDS	SUMMARY OF POSSIBLE COUNTERMEASURE(S)
Carrying	Falls and Slips	Reduce number and weight of containers carried on icy or wet surfaces. Avoid twisting or leaning forward positions. If bags are used, avoid swinging them. Use of wheeled carts may be an advantage in backyard collection. Use caution when hoisting container to shoulder. Proper footwear. Avoid walking in customer yards, use sidewalks and driveways instead, except under icy conditions.
	Overexertion	Normally does not occur while carrying but rather when dumping or lifting except when twisting as on slippery surfaces.

PRELIMINARY TASK/HAZARD ANALYSIS

TASK	HAZARDS	SUMMARY OF POSSIBLE COUNTERMEASURE(S)
Lifting	Overexertion	Avoid jerking action. Slow steady lifts are best. Test can for weight before lifting. Keep can close to body at all times. Avoid twisting action. Get help for heavy weights; train employees how to lift together. Enforce container weight regulations. Public education programs. Plastic bags probably are not as great a lifting hazard.
	Falls or Slips	Avoid jerks and twisting action. Proper footwear.

TABLE A (cont.)

PRELIMINARY TASK/HAZARD ANALYSIS

TASK	HAZARDS	SUMMARY OF POSSIBLE COUNTERMEASURE(S)
Riding on Step	Getting caught in Packer	Due to placing feet or hands partially in hopper. Should be prohibited and employees trained how to ride step properly. Design of step, grab handles and back corners of packers should be reevaluated to determine if design could not be developed to make it very awkward to stand with feet or hands partially in the hopper. Pinch point protection.
	Striking Against Posts, Trees, Cars as Ride By	Signaling devices (to driver) that can be activated by the rider; must be accompanied by training and practice in their use. Training to not try to jump clean of the truck. Bak-safe device. Training in keeping body close to the truck. Driver training in judging distance.
	Step Hitting Ground and Throwing Rider	Driver training of hazardous surfaces, e.g., gutters, corners, driveways, dips. Step height and design. Increased size of step.
	Truck Lerching due to Sudden Starts and Stops, Corners, etc., Throwing Employee	Driver training in gradual acceleration and deceleration. Training in braking distance. Increased use of the cab where feasible. Increased size of step.
	Step Breaking While Riding	A formalized maintenance and vehicle inspection program.

PRELIMINARY TASK/HAZARD ANALYSIS

TASK	HAZARDS	SUMMARY OF POSSIBLE COUNTERMEASURE(S)
Getting On and Off the Step	Falls or Slips From the Step due to Haste of Employee or Moving Truck	Rules against jumping off moving vehicles. Extended hand rails. Training employees to wait until after the truck has lerched backward in its stopping motion before dismounting.
	Falls due to Stepping into Changes in Surface Levels.	Choice of driveway or walkway rather than yard for stoppi
	Falls due to Wet Steps and Surfaces	Slip resistant steps.
	Striking Against Side of Truck	Proper stopping procedure training for driver. Extended hand rails. Slip resistant steps.
	Striking Against Yard Objects	Choice of stopping point by driver.
Getting Out of Cab	Slips due to Loss of Footing	Proper stance (facing truck) getting out of cab. Grab rails on side of truck near door.
	Slips in Oil or Grease in Employer's Yard	Maintenance and clean up practices.

FIGURE A (cont.)

PRELIMINARY TASK/HAZARD ANALYSIS

TASK	HAZARDS	SUMMARY OF POSSIBLE COUNTERMEASURE(S)
Using Plastic Bags	Cuts, especially to Legs, when Glass or Other Sharp Object Protrudes through the Bag	Chaps on legs. Use of long sleeved shirts and gloves. Train employees not to swing bags. Public regulations on use of bags.
	Hopper Blade "Popping" Bag and Sending out a Spray of Dust, Ashes, and Sawdust, etc.	"Flaps." Getting away from back of hopper after dumping bag. Turning head when dumping bag. Eye protection.
	Overexertion	Avoid throwing or wide-arc swinging of bags.

PRELIMINARY TASK/HAZARD ANALYSIS

TASK	HAZARDS	SUMMARY OF POSSIBLE COUNTERMEASURE(S)
Operating Packing Mechanism	Getting Caught in Packer	Use left hand. Design of operating buttons so that they cannot be operated while riding on the step. Training to avoid putting hands or feet in hopper at any time while riding on step. Training to let falling waste go. Use of two handed operating buttons. Emergency stop buttons. Pinch point protection.
	Hopper Ejecting Materials	"Flaps" over packer blade. Use of left hand to operate packer. Eye protection.
	Twisting or Jerking of Hand by Sweeper Blade	Design of Controls.

TABLE A (cont.)

PRELIMINARY TASK/HAZARD ANALYSIS

TASK	HAZARDS	SUMMARY OF POSSIBLE COUNTERMEASURE(S)
Pushing Waste Back Into The Hopper	Getting Caught in the Packer	Note: This activity is extremely danagerous and should be prohibited where possible. Employees should be told of the hazard of getting caught in the packer. They should explicitly be told that when they see waste falling out of the hopper to LET IT GO, stop the packing mechanism as soon as possible and put the waste back in after the packer has stopped. "Flaps" over the packer blade may help reduce the need to push waste back into the packer. Employees might be furnished with a bar with which to push waste back in. Regulations against scavenging. Pinch point protection.

PRELIMINARY TASK/HAZARD ANALYSIS

TASK	HAZARDS	SUMMARY OF POSSIBLE COUNTERMEASURE(S)
Standing Behind Packer Truck		Note: Standing behind the packer truck is a dangerous activity. Employees should be tained to spend the least amount of time possible behind the truck and to move away as soon as possible.
	Hopper Ejecting Materials	"Flaps". Eye protection.
	Being Struck by Another Employee or Another Employee's Container	Smaller crew size. Coordination between crew members. "Rythum method" in their walking patterns. Crew chief direction.
	Being Struck by Truck	Bak-safe.
	Exhaust Fumes	Avoid practice of walking behind packer all day. Check exhaust system frequently.
	Truck Kicking up Rocks and Other Materials	Avoid standing behind truck when it is moving.

SECTION II

SUMMARY OF IRIS USER INDUSTRY WIDE DATA

This section provides a summary of the IRIS data as it applies to all users, and as it relates to industry wide trends. It is divided into 2 parts. Part I reviews the frequency, severity and costs of injuries to the industry. Part II summarizes the characteristics of the injuries occurring in the industry.

PART I - FREQUENCY, SEVERITY, COSTS

FIGURES 5 through 8 summarize the frequency, severity and costs of injuries reported during this quarter.

FIGURE 5

FIGURE 5 provides a recap for the quarter. This FIGURE lists, in order of user number, the number of injuries reported by each IRIS user and categorizes these injuries by their severity level (i.e., first aid through death). For each severity level the percentage of the total injuries reported is shown. For example, if a percentage of 28% is shown for the "first-aid" severity level, this means that 28% of all the injuries reported were classified as first-aid. The purpose of this FIGURE is to recap the severity of injuries by user, so as to make it possible to compare users by the percent of injuries at certain severity levels. To do this, you should read across the page to identify the total number of injuries reported this quarter and the number and percent of these injuries classified at various severity levels.

FIGURES 6-8

FIGURES 6 through 8 compare users and provide AVERAGES for injury frequency, severity and costs. In all of these FIGURES the comparison is done by ranking IRIS user's in order of highest to lowest injury rates. To use these FIGURES you should:

(1) Identify the type of rate and type of comparison being made. "OSHA Incidence Rates" are measures of frequency of injuries. The "Severity Rate," and the "Average Workdays Lost per Lost Workday Case" are measures of the severity of injuries. The "Average Direct Cost per OSHA Recordable Injury" and the "Average Cost per Man-year" are measures of the costliness of injuries. (See descriptions of the FIGURES below.)

(2) look for an IRIS user or the AVERAGE and read across the page to identify the rates. FIGURES having more than one type of rate may have the AVERAGE or a given IRIS user on a different row for each type of rate, because IRIS users are listed in order of highest to lowest rates.

(3) determine how each user stands compared with other IRIS users and the AVERAGE.

FIGURE 4

FIGURE 4 lists three columns of data by user in order of highest to lowest rates: the OSHA incidence rate for all OSHA recordable injuries, the OSHA incidence rate for lost workday cases, and a severity rate. The meaning of the rates are explained below:

- The OSHA incidence rate is the number of OSHA recordable injuries per 200,000 hours of exposure. The base figure of "200,000 hours" is the standard figure used in OSHA statistics. It is roughly equivalent to 100 full-time employees working a year or 100 man-years (i.e., 100 employees working 40 hours per week for 50 weeks per year).

  OSHA incidence rates can be thought of as being roughly equivalent to the number of injuries that will occur to 100 employees during a year. Therefore, an OSHA incidence rate of "37" means (roughly) that the organization is having 37 injuries per year for each 100 employees or that (on the average) 1 out of every 3 employees are being injured. The national average OSHA incidence rate for all industries has been around 10 for the last several years.

  An "OSHA recordable" injury is one included in the OSHA incidence rates as defined by OSHA. First-aid injuries are not OSHA recordable, but those requiring medical treatment (even though there was no lost time) are recordable as are lost workday injuries and fatalities.

- The OSHA incidence rate for lost workday cases (i.e., "LWC" in Column 2 in FIGURE 6) is exactly the same as that for all OSHA recordable injuries, except that only lost time cases are counted. That is, it shows the number of lost workday injuries per 100 man-years worked. For organizations familiar with the ANSI (American National Standards Institute) Z16.1 injury rates, they

will find the OSHA incidence rate for lost workday cases very nearly equal to 1/5 of the ANSI rate. Those organizations wishing to compare OSHA and ANSI rates should multiply the OSHA rate shown in column 2 of FIGURE 6 by 5 (Note: This is only an approximation of an ANSI rate).

- The "severity rate" (column 3 of FIGURE 6) is similar to the OSHA incidence rate but it shows the number of workdays lost, instead of number of injuries, per 100 man-years worked (i.e., 200,000 hours). For example, a severity rate of 500 would mean (roughly) that an organization is losing 500 workdays for every 100 employees per year, or that (on the average) each employee is losing 5 days a year for on-the-job injuries.

FIGURE 7

FIGURE 7 shows the average number of workdays lost per lost workday case by user ranked in order of highest to lowest. For example, an average workdays lost of "10" would mean that, on the average, every time an employee has a lost time injury he loses 10 days. As with all averages, the number of injuries involved (i.e., number of lost workday cases) must be reasonably high for the average to have meaning.

FIGURE 8

FIGURE 8 shows: 1) the average direct cost per OSHA recordable injury (column 1) and 2) the direct costs per man-year (column 2). Direct costs are normally those for which money was actually expended and include worker's compensation, medical expenses, and wage continuation benefits (e.g., injury leave). There are many indirect costs such as down time, replacement time, lost time by witnesses and supervisors, etc., which are not included in these figures. Indirect costs are estimated to be 5 times the direct costs in cities according to the National Safety Council. The columns are explained below:

- "Average Direct Costs per OSHA Recordable Injury" (column 1 in FIGURE 8) means what each injury is costing on the average. For example, an average direct cost per OSHA recordable injury of "$500" means that on the average each OSHA recordable injury (i.e., in non-first-aid case) is costing the organization $500!

- "Direct Cost per Man-year" (column 2) shows the cost per 2,000 hours or the average cost per year per employee. Direct cost per man-year of "$200" would mean that on the average an organization's injuries are costing $200 per employee per year.

It should be reemphasized that both the cost and the workdays lost data are not complete and only cover figures reported to IRIS as of May 15, 1976. These workdays lost and costs are thus gross underestimates.

TABLE B summarizes the data from FIGURES 5-8

In reviewing these FIGURES, the data for the AVERAGE (shown on the FIGURES as AVG) is the most important because it summarizes the results for all users combined. After examining the AVERAGES, it is important to examine how great the range of rates between users is. Wide ranges are important because they show that it is possible to achieve lower rates of injury under given operating systems and safety programs.

TABLE B

SUMMARY OF INJURIES

BY FREQUENCY, SEVERITY AND COSTS

FREQUENCY

- There were 575 cases reported by 32 of the 35 IRIS users.

- The AVERAGE OSHA incidence rate is 37. This means that on the average each 100 employees has 37 injuries a year, or that one out of every 3 employees are injured. The national OSHA incidence rate for all industries is 10.4, making the solid waste industry nearly 4 times the average of industry.

- IRIS users range in frequency from User No. 244, which is experiencing 1.6 injuries per employee per year to User No. 242 which is experiencing 4 injuries for every 100 employees per year.

SEVERITY

- There have been 3,680 days lost so far for injuries occurring during first quarter.

- 59% of the total cases resulted in lost workdays. The national average for all industries is 33%, making the fraction of lost workday cases in the solid waste industry nearly 2 times the average industry. Two IRIS users had less than 22% lost workday cases, but the rest were higher than AVERAGE.

- The AVERAGE OSHA severity rate (number of lost workdays per 100 employees) is 269. This means that on the average each employee is losing 2.7 days per year for injuries. One user was as high as nearly 11 days lost per year per employee; several are losing zero days a year per employee.

- On the AVERAGE, each lost workday case is resulting in 10.82 workdays lost. This is lower than the national average for all industries, which is 10.5.

- One of the 575 injuries is a permanent disability.

DIRECT COSTS (Costs given are not final but represent costs known as of May 15, 1976. These costs, therefore, may greatly underestimate the actual.)

- So far the costs for injuries occurring in the first quarter 1976 amount to $151,164.

- The AVERAGE cost per OSHA recordable injury is $296.

- The AVERAGE cost per man-year is $111. This means that on the average injuries are costing $111 per full-time employee, per year.

FIGURE 5

NUMBER OF INJURIES REPORTED BY TYPE OF SEVERITY
COMPARISON OF 'IRIS' USERS

REPORTING PERIOD: JANUARY - MARCH 1976

INSTRUCTIONS: THE PERCENTAGES ARE A FRACTION OF THE TOTAL CASES REPORTED. THEY TOTAL TO APPROXIMATELY 100% IF READ HORIZONTALLY. COMPARE YOUR ORGANIZATION'S PERCENTAGES WITH THE AVERAGE AND WITH OTHER IRIS USERS. HIGHER THAN AVERAGE PERCENTAGES IN THE LOWER SEVERITY GROUPS, I.E., TOWARD THE LEFT, ARE DESIRED, AS ARE LOWER THAN AVERAGE PERCENTAGES TOWARD THE RIGHT.

IRIS USER NO.	TOTAL CASES RPT'D	FIRST AID		NON-FATAL W/O LST WKDAY		LOST WKDY CASES		PERM DISAB		FATALITY	
		NO.	%	NO.	%	NO.	%	NO.	%	NO.	%
AVG	575	64	11	170	30	340	59	1	0.17	0	0.00
101	22	12	55	4	18	6	27	0	0.00	0	0.00
109	45	2	4	14	31	29	64	0	0.00	0	0.00
111	13	1	8	4	31	8	62	0	0.00	0	0.00
125	64	3	5	14	22	47	73	0	0.00	0	0.00
136	5	0	0	0	0	5	100	0	0.00	0	0.00
140	61	3	5	18	30	40	66	0	0.00	0	0.00
146	19	1	5	13	68	5	26	0	0.00	0	0.00
161	10	6	60	4	40	0	0	0	0.00	0	0.00
171	26	2	8	12	46	12	46	0	0.00	0	0.00
172	69	0	0	23	33	46	67	0	0.00	0	0.00
181	40	11	27	9	22	20	50	0	0.00	0	0.00
186	17	9	53	4	24	4	24	0	0.00	0	0.00
191	18	1	6	2	11	15	83	0	0.00	0	0.00
204	9	0	0	6	67	3	33	0	0.00	0	0.00
207	32	0	0	17	53	15	47	0	0.00	0	0.00
210	4	0	0	2	50	2	50	0	0.00	0	0.00
211	2	0	0	1	50	1	50	0	0.00	0	0.00
212	23	1	4	0	0	22	96	0	0.00	0	0.00
235	6	0	0	1	17	5	83	0	0.00	0	0.00
236	21	0	0	2	10	19	90	0	0.00	0	0.00
237	4	1	25	1	25	2	50	0	0.00	0	0.00
242	1	0	0	0	0	0	0	1	100.00	0	0.00
244	6	0	0	2	33	4	67	0	0.00	0	0.00
260	22	1	5	7	32	14	64	0	0.00	0	0.00
261	1	0	0	0	0	1	100	0	0.00	0	0.00
265	10	0	0	5	50	5	50	0	0.00	0	0.00
272	3	0	0	2	67	1	33	0	0.00	0	0.00
283	5	3	60	2	40	0	0	0	0.00	0	0.00
285	1	0	0	0	0	1	100	0	0.00	0	0.00
292	6	4	67	0	0	2	33	0	0.00	0	0.00
295	7	2	29	1	14	4	57	0	0.00	0	0.00
296	3	1	33	0	0	2	67	0	0.00	0	0.00

AVERAGE INJURY RATES BY 'IRIS' USERS
RANKED FROM HIGHEST TO LOWEST

ORTING PERIOD: JANUARY - MARCH 1976

INITIONS: AVERAGE RATIO = RATE / AVERAGE FOR THE RATE.
A INCIDENCE RATE = (NUMBER OF OSHA RECORDABLE CASES /
-HOURS EXPOSURE) X 200,000.
GHLY EQUIVALENT TO THE NUMBER OF CASES PER 100 FULL TIME EMPLOYEES
YEAR. DOES NOT INCLUDE FIRST AID INJURIES. DOES INCLUDE MEDICAL
ATMENT, LOST TIME, PERMANENT DISABILITY AND FATALITY CASES.
ERITY RATE = (NUMBER OF WORKDAYS LOST / MAN-HOURS EXPOSURE) X 200,000.
GHLY EQUIVALENT TO THE NUMBER OF WORKDAYS LOST PER 100 FULL TIME
LOYEES PER YEAR.

TRUCTIONS: FIND YOUR ORGANIZATION'S USER NUMBER AND COMPARE
IT RANKS WITH THE AVERAGE AND OTHER IRIS USERS.
OOD STANDING IS AN AVERAGE RATIO OF LESS THAN .50.
OOR STANDING IS AN AVERAGE RATIO OF GREATER THAN 1.25.

OSHA INCIDENCE RATE				INCIDENCE RATE - LWC				SEVERITY RATE		
MAN-HOURS EXPOSURE	NO. INJ	RATE	AVG RATIO	IRIS USER NO.	NO. INJ	RATE	AVG RATIO	IRIS USER NO.	RATE	AVG RATIO
7,572	6	158	4.24	244	4	106	4.24	236	1,080	4.01
7,752	4	103	2.76	236	19	80	3.20	296	755	2.80
47,613	21	88	2.36	212	22	74	2.98	212	710	2.64
21,331	9	84	2.26	296	2	56	2.24	136	575	2.14
80,964	32	79	2.12	210	2	52	2.07	140	543	2.02
59,158	22	74	1.99	191	15	51	2.06	204	431	1.60
60,740	21	69	1.85	261	1	48	1.93	181	420	1.56
8,685	3	69	1.85	260	14	46	1.85	172	342	1.27
58,507	17	58	1.56	237	2	46	1.85	244	317	1.18
7,155	2	56	1.50	140	40	37	1.50	292	285	1.06
214,417	58	54	1.45	207	15	37	1.49	272	273	1.01
271,441	69	51	1.36	172	46	34	1.36	AVG	269	1.00
4,147	1	48	1.29	181	20	30	1.21	125	253	0.94
132,040	29	44	1.18	235	5	28	1.14	111	251	0.93
113,611	24	42	1.13	204	3	28	1.13	207	205	0.76
2,734,867	511	37	1.00	AVG	341	25	1.00	211	203	0.75
241,676	43	36	0.95	125	47	24	0.97	171	202	0.75
11,563	2	35	0.93	109	29	24	0.96	109	187	0.69
35,295	6	34	0.91	171	12	21	0.85	191	178	0.66
388,033	61	31	0.84	295	4	20	0.82	260	171	0.64
74,202	10	27	0.72	285	1	20	0.79	235	170	0.63
39,323	5	25	0.68	136	5	15	0.60	237	161	0.60
151,073	18	24	0.64	265	5	13	0.54	261	145	0.54
10,162	1	20	0.53	111	8	12	0.48	101	134	0.50
44,506	4	18	0.48	292	2	10	0.38	186	106	0.39
134,728	12	18	0.48	211	1	9	0.35	210	103	0.38
22,662	2	18	0.47	186	4	9	0.35	242	98	0.37
34,467	3	17	0.47	101	6	8	0.30	295	97	0.36
92,863	8	17	0.46	146	5	7	0.27	146	44	0.16
67,090	5	15	0.40	272	1	6	0.23	265	40	0.15

FIGURE 6 (Continued) PAGE 2

IRIS USER NO.	OSHA INCIDENCE RATE MAN-HOURS EXPOSURE	NO. INJ	RATE	AVG RATIO	INCIDENCE RATE - LWC IRIS USER NO.	NO. INJ	RATE	AVG RATIO	SEVERITY RATE IRIS USER NO.	RATE
101	159,199	10	13	0.34	242	1	4	0.16	285	39
292	42,096	2	10	0.25	286	0	0	0.00	286	0
242	50,835	1	4	0.11	283	0	0	0.00	283	0
286	2,363	0	0	0.00	243	0	0	0.00	243	0
243	11,650	0	0	0.00	215	0	0	0.00	215	0
215	25,949	0	0	0.00	161	0	0	0.00	161	0

FIGURE 7

AVERAGE WORKDAYS LOST PER LOST WORKDAY CASE
BY 'IRIS' USERS
RANKED FROM HIGHEST TO LOWEST

ORTING PERIOD: JANUARY - MARCH 1976

TRUCTIONS: FIND YOUR ORGANIZATION'S USER NUMBER AND COMPARE
IT RANKS WITH THE AVERAGE AND OTHER IRIS USERS.
OOD STANDING IS AN AVERAGE RATIO OF LESS THAN .50.
OOR STANDING IS AN AVERAGE RATIO OF GREATER THAN 1.25.

ANK	IRIS USER NO.	NO LOST WKDY CASES	DAYS LOST	AVG WKDYS LOST	AVG RATIO (DAYS / AVG)
GHEST	272	1	47	47.00	4.34
2	136	5	193	38.60	3.57
3	292	2	60	30.00	2.77
4	242	1	25	25.00	2.31
5	211	1	23	23.00	2.12
6	111	8	169	21.12	1.95
7	101	6	107	17.83	1.65
8	204	3	46	15.33	1.42
9	140	40	582	14.55	1.34
10	181	20	277	13.85	1.28
11	236	19	257	13.53	1.25
12	296	2	27	13.50	1.25
13	186	4	49	12.25	1.13
	AVG	340	3,680	10.82	1.00
14	125	47	491	10.45	0.97
15	172	45	464	10.31	0.95
16	171	12	115	9.58	0.89
17	212	22	210	9.55	0.88
18	109	29	226	7.79	0.72
19	146	5	33	6.60	0.61
20	235	5	30	6.00	0.55
21	207	15	83	5.53	0.51
22	295	4	19	4.75	0.44
23	260	14	52	3.71	0.34
24	237	2	7	3.50	0.32
25	191	15	52	3.47	0.32
26	265	5	15	3.00	0.28
27	261	1	3	3.00	0.28
28	244	4	12	3.00	0.28
29	285	1	2	2.00	0.18
OWEST	210	2	4	2.00	0.18

FIGURE 8

DIRECT COSTS BY 'IRIS' USERS
RANKED FROM HIGHEST TO LOWEST

REPORTING PERIOD: JANUARY - MARCH 1976

DEFINITIONS: DIRECT COSTS INCLUDE MEDICAL EXPENSES, WORKMEN'S COMPENSATION BENEFITS, AND WAGE CONTINUATION BENEFITS (E.G. INJURY LEAVE) ONLY. INDIRECT COSTS ARE NOT INCLUDED
DIRECT COSTS PER MAN-YEAR IS THE COST PER FULL-TIME SANITATION EMPLOYEE PER YEAR BASED ON 2,000 HOURS PER YEAR.
TREATMENT, LOST TIME, PERMANENT DISABILITY AND FATALITY CASES.
INSTRUCTIONS: FIND YOUR ORGANIZATION'S USER NUMBER AND COMPARE HOW IT RANKS WITH THE AVERAGE AND OTHER IRIS USERS.
A GOOD STANDING IS AN AVERAGE RATIO OF LESS THAN .50.
A POOR STANDING IS AN AVERAGE RATIO OF GREATER THAN 1.25.

AVG DIRECT COST PER OSHA RECORDABLE INJ

IRIS USER NO.	NO OSHA RECORD INJ	AVG COST	AVG RATIO (AVG COST/AVG)
242	1	6,877	23.25
296	2	835	2.82
111	12	816	2.76
212	22	629	2.12
292	2	600	2.03
272	3	555	1.88
140	58	479	1.62
204	9	455	1.54
101	10	422	1.43
136	5	394	1.33
181	29	362	1.22
125	61	346	1.17
236	21	332	1.12
AVG	511	296	1.00
172	69	227	0.77
237	3	201	0.68
109	43	191	0.65
235	6	187	0.63
295	5	178	0.60
211	2	164	0.55
186	8	159	0.54
261	1	159	0.54
171	24	147	0.50
244	6	130	0.44
210	4	98	0.33
191	17	87	0.29
260	21	75	0.25
285	1	61	0.21
283	2	59	0.20
146	18	58	0.20
207	32	54	0.18
265	10	50	0.17
161	4	19	0.06

DIRECT COST PER MAN YEAR

IRIS USER NO.	MAN-HRS EXPOSURE	COSTS PER M-Y	AVG RATIO (COSTS/AVG)
212	59,158	468	4.21
296	7,155	467	4.20
204	21,331	384	3.45
236	47,613	293	2.64
242	50,835	271	2.43
140	214,417	260	2.34
244	7,572	205	1.85
181	132,040	161	1.45
111	134,728	145	1.31
237	8,685	139	1.25
172	271,441	115	1.04
AVG	2,734,867	111	1.00
125	388,033	109	0.98
210	7,752	101	0.91
272	34,467	97	0.87
261	4,147	77	0.69
109	241,676	69	0.62
235	35,295	64	0.57
171	113,611	63	0.56
136	67,090	59	0.53
101	159,199	57	0.52
292	42,096	57	0.51
260	60,740	52	0.46
191	58,507	50	0.45
295	39,323	45	0.41
207	80,964	42	0.38
211	22,662	29	0.26
186	92,863	27	0.25
283	11,563	21	0.19
146	151,073	14	0.12
265	74,202	13	0.12
285	10,162	12	0.11
161	44,506	7	0.06

PART II - CHARACTERISTICS OF ACCIDENTS

FIGURES 9 through 14, summarize some of the characteristics of injuries occurring to all IRIS users during the 1st quarter of 1976. Each FIGURE covers a different characteristic of the accidents:

- FIGURE 9: Accident Type, e.g., falls
- FIGURE 10: Injury Type, e.g., bruise
- FIGURE 11: Part of Body Involved, e.g., leg
- FIGURE 12: Activity, e.g., carrying
- FIGURE 13: Accident Site, e.g., back of the truck
- FIGURE 14: Type of Waste Involved

Each of these FIGURES is divided into 3 columns. (FIGURES 9, 11, 12, and 14 have all three columns on one page. FIGURES 10 and 13 show the columns on 3 separate pages marked A, B, and C respectively.) The first column lists the number and percent of OSHA recordable injuries by characteristic of the accident in order of highest to lowest percent. The second column lists the number and percent of workdays lost (and average workdays lost) by characteristic in order of highest to lowest percent of workdays lost. The third column lists the amount and percent of direct costs (and average direct costs) by characteristic in order of highest to lowest percent of direct costs. Thus a given characteristic may be in different rows depending on the percent of injuries, workdays lost and direct costs associated with that characteristic. For example, in FIGURE 9, "Hurt by object handled" accidents amount to the second highest percent of the injuries (10%), the sixth highest percent of workdays lost (11%) and the fifth highest percent of direct costs (7%), and therefore, "Hurt by object handled" is shown in the second row of the first column, sixth row of the second column and the fifth row of the third column.

TABLE C

TABLE C summarizes the data on FIGURES 9 through 14 for all IRIS users.

TABLE C

SUMMARY OF ACCIDENTS BY CHARACTERISTIC

Characteristics with Highest Percent of OSHA Recordable Injuries, Workdays Lost & Direct Costs

TYPE OF CHARACTERISTIC	CHARACTERISTICS WITH THE: HIGHEST % OF OSHA RECORDABLE INJURIES	HIGHEST % OF WORKDAYS LOST	HIGHEST % OF DIRECT COSTS
Accident Type	Overexertion - 18% Hurt by Obj. Handled 10% Object in Eyes - 9%	Overexertion - 18% Struck by Vehicle - 11% Fall to Same Level - 11%	Overexertion - 23% Fall to Same Level - 10% Fall to Different level - 9%
Injury Type	Sprain/Strain - 41% Bruise/Contusion/ Crushing - 23%	Sprain/Strain - 49% Bruise/Contusion/ Crushing - 21%	Sprain/Strain - 47% Bruise/Contusion/ Crushing - 22%
Part of Body Involved	Back - 20% Eyes - 12%	Back - 27% Ankle - 10%	Back - 26% Ankle - 8%
Activity	Lifting Can/Waste - 21% Dumping into Hopper 13%	Lifting Can/Waste - 20% Standing/Walking - 12%	Lifting Can/Waste - 23% Standing/Walking - 12%
Accident Site	Street at Back of Truck - 25% In/On Vehicle - 17% Street at Curb - 16%	Street at Back of Truck - 27% In/On Vehicle - 25% Street at Curb - 18%	Street at Back of Truck - 26% In/On Vehicle - 19% Street at Curb - 18%
Type of Waste Involved	Glass - 6%	Glass - 4%	Wood/Logs/Lumber - 5%

FIGURE 9

ALL USERS
ACCIDENT TYPES RANKED FROM HIGHEST TO LOWEST PERCENT OF
OSHA RECORDABLE INJURIES, WORKDAYS LOST AND DIRECT COSTS

REPORTING PERIOD: JANUARY - MARCH 1976

DEFINITIONS: OSHA RECORDABLE CASES INCLUDE MEDICAL TREATMENT CASES (I.E. NON-FATAL CASES WITHOUT LOST WORKDAYS), LOST WORKDAY, PERMANENT DISABILITY AND FATAL CASES. FIRST AID INJURIES ARE NOT INCLUDED.
DIRECT COSTS INCLUDE MEDICAL EXPENSES, WORKER'S COMPENSATION BENEFITS AND WAGE CONTINUATION BENEFITS (E.G., INJURY LEAVE) ONLY. INDIRECT COSTS ARE NOT INCLUDED.

OSHA RECORDABLE INJURIES			WORKDAYS LOST				DIRECT COSTS			
ACCIDENT TYPE	OSHA REC INJ NO.	OSHA REC INJ %	ACCIDENT TYPE	WKDYS LOST NO.	WKDYS LOST %	AVG/LOST WKDY CASE	ACCIDENT TYPE	DIRECT COSTS AMT.	DIRECT COSTS %	AVG COSTS/ OSHA REC IN.
OVEREXERTION	91	17.81	OVEREXERTION	680	18.48	10.15	OVEREXERTION	34,711	22.96	381
HURT BY OBJ HANDLED	49	9.59	STRUCK BY VEHICLE	404	10.98	21.26	FALL TO SAME LEVEL	14,655	9.69	431
OBJECT IN EYES	45	8.81	FALL TO SAME LEVEL	393	10.68	15.12	FALL TO DIFF LEVEL	13,520	8.94	588
TRIP/STUMBLE/SLIP	39	7.63	FALL FROM STEP	381	10.35	12.29	FALL FROM STEP	11,756	7.78	327
STRUCK AGAINST VEH	36	7.05	FALL TO DIFF LEVEL	286	7.77	13.62	HURT BY OBJ HANDLED	10,414	6.89	213
FALL FROM STEP	36	7.05	HURT BY OBJ HANDLED	271	7.36	11.29	CAUGHT IN PACKER	9,598	6.35	1,920
STRUCK BY OBJECT	34	6.65	STRUCK AGAINST VEH	195	5.30	8.86	STRUCK BY VEHICLE	9,065	6.00	394
FALL TO SAME LEVEL	34	6.65	TRIP/STUMBLE/SLIP	182	4.95	6.74	STRUCK BY OBJECT	7,585	5.02	223
FALL TO DIFF LEVEL	23	4.50	STRUCK BY OBJECT	150	4.08	7.14	TRIP/STUMBLE/SLIP	7,408	4.90	190
STRUCK BY VEHICLE	23	4.50	CAUGHT IN PACKER	125	3.40	25.00	STRUCK AGAINST VEH	6,319	4.18	176
BODILY REACTION	15	2.94	CONTACT-NOXIOUS SUBST	106	2.88	15.14	CAUGHT BETWEEN/UNDER	5,051	3.34	561
DROPPED OBJ ON SELF	10	1.96	NO SPECIFIC ACCIDENT	95	2.58	23.75	OBJECT IN EYES	3,444	2.28	77
CAUGHT BETWEEN/UNDER	9	1.76	CAUGHT BETWEEN/UNDER	89	2.42	22.25	BODILY REACTION	3,414	2.26	228
STRUCK BY VEH PART	8	1.57	BODILY REACTION	80	2.17	6.15	NO SPECIFIC ACCIDENT	3,340	2.21	668
STRUCK AGAINST OBJ	8	1.57	OBJECT IN EYES	74	2.01	4.35	CONTACT-NOXIOUS SUBST	3,100	2.05	387
CONTACT-NOXIOUS SUBST	8	1.57	STRUCK BY VEH PART	58	1.58	14.50	STRUCK BY VEH PART	2,646	1.75	433
ANIMAL BITE	7	1.37	DROPPED OBJ ON SELF	41	1.11	4.56	DROPPED OBJ ON SELF	1,671	1.11	167
CAUGHT IN PACKER	5	0.98	STRUCK AGAINST OBJ	16	0.43	5.33	AGGRESSIVE ACT	781	0.52	195
STEP ON SHARP OBJECT	5	0.98	CONTACT-TEMP EXTREME	14	0.38	7.00	OTHER	533	0.35	107
NO SPECIFIC ACCIDENT	5	0.98	AGGRESSIVE ACT	12	0.33	4.00	STEP ON SHARP OBJECT	482	0.32	96
OTHER	5	0.98	OTHER	9	0.24	2.25	FELL ON/AGNST/THRU OB	462	0.31	115
AGGRESSIVE ACT	4	0.78	FELL ON/AGNST/THRU OB	8	0.22	4.00	ANIMAL BITE	443	0.29	63
FELL ON/AGNST/THRU OB	4	0.78	ANIMAL BITE	5	0.14	2.50	STRUCK AGAINST OBJ	408	0.27	51
CONTACT-TEMP EXTREME	3	0.59	STEP ON SHARP OBJECT	5	0.14	2.50	CONTACT-TEMP EXTREME	246	0.16	82
DERMATITIS	3	0.59	DERMATITIS	1	0.03	1.00	DERMATITIS	73	0.05	24
INSECT BITE	1	0.20	TOTAL	3,680	100.00	10.82	FLASH BURN	25	0.02	25
FLASH BURN	1	0.20					INSECT BITE	15	0.01	15
TOTAL	511	100.00					TOTAL	151,164	100.00	296

FIGURE 10A

ALL USERS
INJURY TYPES RANKED FROM HIGHEST TO LOWEST
PERCENT OF OSHA RECORDABLE INJURIES

REPORTING PERIOD: JANUARY - MARCH 1976

DEFINITIONS: OSHA RECORDABLE CASES INCLUDE MEDICAL TREATMENT CASES (I.E. NON-FATAL CASES WITHOUT LOST WORKDAYS), AND LOST WORKDAY, PERMANENT DISABILITY AND FATAL CASES. FIRST AID INJURIES ARE NOT INCLUDED.

TYPE OF INJURY	OSHA RECORDABLE INJURIES NO.	%
SPRAIN/STRAIN	208	40.70
BRUISE/CONTUSION/CRUSHING	120	23.48
CUT/LACERATION/PUNCTURE	67	13.11
OBJECT IN EYE	47	9.20
OTHER	17	3.33
FRACTURE	10	1.96
SCRATCHES/ABRASIONS	8	1.57
ANIMAL BITE	7	1.37
DERMATITIS/RASH	6	1.17
BURN/SCALD - HEAT	3	0.59
BURN - CHEMICAL	3	0.59
CONCUSSION	2	0.39
FREEZING/FROSTBITE/OTHER LOW TEMPERATURE	2	0.39
INFLAMMATION - JOINTS/TENDONS/MUSCLES	2	0.39
NOSEBLEED	2	0.39
POISONING	2	0.39
AMPUTATION	1	0.20
INSECT BITE	1	0.20
DISLOCATION	1	0.20
HERNIA/RUPTURE	1	0.20
TORN CARTILAGE	1	0.20
TOTAL	511	100.00

FIGURE 10B

ALL USERS
INJURY TYPES RANKED FROM HIGHEST TO LOWEST
PERCENT OF WORKDAYS LOST

'ORTING PERIOD: JANUARY - MARCH 1976

'INITIONS: OSHA RECORDABLE CASES INCLUDE MEDICAL TREATMENT
;ES (I.E. NON-FATAL CASES WITHOUT LOST WORKDAYS), AND LOST WORKDAY,
:MANENT DISABILITY AND FATAL CASES. FIRST AID INJURIES ARE NOT INCLUDED.

TYPE OF INJURY	WORKDAYS LOST NO.	%	AVG WKDYS LOST/ LOST WKDYS CASE
RAIN/STRAIN	1,792	48.70	11.13
JISE/CONTUSION/CRUSHING	790	21.47	9.40
T/LACERATION/PUNCTURE	321	8.72	10.35
ACTURE	259	7.04	32.37
HER	100	2.72	6.67
JECT IN EYE	89	2.42	4.68
NCUSSION	79	2.15	39.50
RN - CHEMICAL	75	2.04	37.50
RATCHES/ABRASIONS	45	1.22	22.50
RNIA/RUPTURE	36	0.98	36.00
PUTATION	25	0.68	25.00
RN CARTILAGE	15	0.41	15.00
RN/SCALD - HEAT	11	0.30	11.00
ISONING	10	0.27	5.00
FLAMMATION - JOINTS/TENDONS/MUSCLES	9	0.24	4.50
RMATITIS/RASH	8	0.22	2.67
IMAL BITE	5	0.14	2.50
SLOCATION	5	0.14	5.00
EEZING/FROSTBITE/OTHER LOW TEMPERATURE	3	0.08	3.00
SEBLEED	3	0.08	3.00
TAL	3,680	100.00	0.00

FIGURE 10C

ALL USERS
INJURY TYPES RANKED FROM HIGHEST TO LOWEST
PERCENT OF DIRECT COSTS

REPORTING PERIOD: JANUARY - MARCH 1976

DEFINITIONS: OSHA RECORDABLE CASES INCLUDE MEDICAL TREATMENT CASES (I.E. NON-FATAL CASES WITHOUT LOST WORKDAYS), AND LOST WORKDAY, PERMANENT DISABILITY AND FATAL CASES. FIRST AID INJURIES ARE NOT INCLUDED. DIRECT COSTS INCLUDE MEDICAL EXPENSES, WORKER'S COMPENSATION BENEFITS AND WAGE CONTINUATION BENEFITS (E.G., INJURY LEAVE) ONLY. INDIRECT COSTS ARE NOT INCLUDED.

TYPE OF INJURY	DIRECT COSTS AMT.	%	AVG COSTS/ OSHA REC IN
SPRAIN/STRAIN	71,535	47.32	344
BRUISE/CONTUSION/CRUSHING	32,706	21.64	273
CUT/LACERATION/PUNCTURE	12,757	8.44	190
AMPUTATION	6,877	4.55	7,696
FRACTURE	5,319	3.52	532
OTHER	4,456	2.95	262
OBJECT IN EYE	4,326	2.86	92
HERNIA/RUPTURE	3,746	2.48	3,746
SCRATCHES/ABRASIONS	3,551	2.35	444
BURN - CHEMICAL	1,587	1.05	529
CONCUSSION	1,070	0.71	535
TORN CARTILAGE	664	0.44	664
DISLOCATION	605	0.40	605
POISONING	482	0.32	241
ANIMAL BITE	443	0.29	63
DERMATITIS/RASH	327	0.22	54
INFLAMMATION - JOINTS/TENDONS/MUSCLES	261	0.17	130
FREEZING/FROSTBITE/OTHER LOW TEMPERATURE	173	0.11	86
NOSEBLEED	148	0.10	74
BURN/SCALD - HEAT	118	0.08	39
INSECT BITE	15	0.01	15
TOTAL	151,164	100.00	296

FIGURE 11

ALL USERS
PARTS OF BODY INJURED RANKED FROM HIGHEST TO LOWEST PERCENT OF
OSHA RECORDABLE INJURIES, WORKDAYS LOST AND DIRECT COSTS

REPORTING PERIOD: JANUARY - MARCH 1976

DEFINITIONS: OSHA RECORDABLE CASES INCLUDE MEDICAL TREATMENT CASES (I.E. NON-FATAL CASES WITHOUT LOST WORKDAYS), AND LOST WORKDAY, PERMANENT DISABILITY AND FATAL CASES. FIRST AID INJURIES ARE NOT INCLUDED.
DIRECT COSTS INCLUDE MEDICAL EXPENSES, WORKER'S COMPENSATION BENEFITS AND WAGE CONTINUATION BENEFITS (E.G., INJURY LEAVE) ONLY.
INDIRECT COSTS ARE NOT INCLUDED.

OSHA RECORDABLE INJURIES			WORKDAYS LOST				DIRECT COSTS			
PART OF BODY	OSHA REC INJ NO.	OSHA REC INJ %	PART OF BODY	WKDYS LOST NO.	WKDYS LOST %	AVG/LOST WKDY CASE	PART OF BODY	DIRECT COSTS AMT.	DIRECT COSTS %	AVG COSTS/ OSHA REC IN.
BACK	101	19.77	BACK	989	26.87	11.92	BACK	39,677	26.25	393
EYES	61	11.94	ANKLE	373	10.14	10.08	ANKLE	12,431	8.22	276
ANKLE	45	8.81	LEG	278	7.55	14.63	SHOULDER	11,831	7.83	394
FINGERS	32	6.26	SKULL	218	5.92	72.67	ARM	8,514	5.63	501
LEG	32	6.26	FINGERS	174	4.73	10.24	EYES	8,431	5.58	138
SHOULDER	30	5.87	SHOULDER	159	4.32	7.57	LEG	7,672	5.08	240
KNEE	26	5.09	NECK	141	3.83	14.10	CHEST/RIBS	7,416	4.91	570
HAND	20	3.91	EYES	140	3.80	5.83	FINGERS	7,197	4.76	225
ARM	17	3.33	FOOT	135	3.67	13.50	MULTIPLE BODY PARTS	5,383	3.56	1,794
FOOT	16	3.13	CHEST/RIBS	126	3.42	12.60	WRIST	4,651	3.08	388
CHEST/RIBS	13	2.54	HAND	107	2.91	11.89	GENITALIA/GROIN	4,337	2.87	394
NECK	12	2.35	MULTIPLE BODY PARTS	102	2.77	34.00	FOOT	4,089	2.71	256
ELBOW	12	2.35	KNEE	94	2.55	4.70	NECK	3,706	2.45	309
WRIST	12	2.35	ABDOMEN	84	2.28	42.00	KNEE	3,573	2.36	137
HIPS	11	2.15	THUMB	83	2.26	27.67	OTHER	3,161	2.09	527
GENITALIA/GROIN	11	2.15	TOES	74	2.01	12.33	HAND	2,920	1.93	146
SCALP	9	1.76	ARM	63	1.71	9.00	SKULL	2,803	1.85	701
FACE	6	1.17	WRIST	60	1.63	12.00	THUMB	2,557	1.69	852
TOES	6	1.17	GENITALIA/GROIN	60	1.63	10.00	HIPS	2,117	1.40	192
OTHER	6	1.17	HIPS	49	1.33	5.44	ABDOMEN	1,958	1.30	653
SKULL	4	0.78	INTERNAL	28	0.76	9.33	INTERNAL	1,336	0.88	445
FOREHEAD	4	0.78	FACE	27	0.73	5.40	SCALP	1,269	0.84	141
NOSE	4	0.78	OTHER	26	0.71	5.20	TOES	1,058	0.70	176
TRUNK	4	0.78	SCALP	25	0.68	5.00	ELBOW	921	0.61	77
THUMB	3	0.59	TRUNK	24	0.65	8.00	FACE	591	0.39	98
ABDOMEN	3	0.59	ELBOW	20	0.54	2.50	TRUNK	505	0.33	126
INTERNAL	3	0.59	NOSE	12	0.33	4.00	NOSE	422	0.28	105
MULTIPLE BODY PARTS	3	0.59	JAW	3	0.08	3.00	FOREHEAD	184	0.12	46
EARS	2	0.39	FOREHEAD	3	0.08	1.50	JAW	183	0.12	183
JAW	1	0.20	BUTTOCKS	3	0.08	3.00	BUTTOCKS	177	0.12	177
CHEEK	1	0.20	TOTAL	3,680	100.00	10.82	EARS	75	0.05	37
BUTTOCKS	1	0.20					CHEEK	20	0.01	20
TOTAL	511	100.00					TOTAL	151,164	100.00	296

FIGURE 12

ALL USERS
ACTIVITIES RANKED FROM HIGHEST TO LOWEST PERCENT OF
OSHA RECORDABLE INJURIES, WORKDAYS LOST AND DIRECT COSTS

REPORTING PERIOD: JANUARY - MARCH 1976

DEFINITIONS: OSHA RECORDABLE CASES INCLUDE MEDICAL TREATMENT CASES (I.E. NON-FATAL CASES WITHOUT LOST WORKDAYS), AND LOST WORKDAY, PERMANENT DISABILITY AND FATAL CASES. FIRST AID INJURIES ARE NOT INCLUDED.
DIRECT COSTS INCLUDE MEDICAL EXPENSES, WORKER'S COMPENSATION BENEFITS AND WAGE CONTINUATION BENEFITS (E.G., INJURY LEAVE) ONLY. INDIRECT COSTS ARE NOT INCLUDED.

OSHA RECORDABLE INJURIES			WORKDAYS LOST				DIRECT COSTS			
ACTIVITY	OSHA REC INJ NO.	OSHA REC INJ %	ACTIVITY	WKDYS LOST NO.	WKDYS LOST %	AVG/LOST WKDY CASE	ACTIVITY	DIRECT COSTS AMT.	DIRECT COSTS %	AVG COSTS/ OSHA REC INJ
LIFTING CAN/WASTE	106	20.74	LIFTING CAN/WASTE	751	20.41	9.75	LIFTING CAN/WASTE	34,893	23.08	329
DUMPING INTO HOPPER	65	12.72	STANDING/WALKING	436	11.85	13.62	STANDING/WALKING	18,672	12.35	397
STANDING/WALKING	47	9.20	DUMPING INTO HOPPER	354	9.62	8.63	DUMPING INTO HOPPER	10,768	7.12	166
PUSHING/PULLING CART	34	6.65	GETTING ON/OFF STEP	333	9.05	12.33	GETTING ON/OFF STEP	10,538	6.97	376
OTHER	34	6.65	DRIVING/OPER EQUIP	291	7.91	15.32	PUSHING/PULLING CART	9,667	6.40	284
CARRYING CAN/WASTE	33	6.46	CARRYING CAN/WASTE	239	6.49	10.86	PUSH WASTE IN HOPPER	9,509	6.29	3,170
DRIVING/OPER EQUIP	28	5.48	RIDING IN CAB	209	5.68	14.93	DRIVING/OPER EQUIP	9,011	5.96	322
GETTING ON/OFF STEP	28	5.48	PUSHING/PULLING CART	174	4.73	7.91	RIDING ON STEP	7,517	4.97	327
RIDING ON STEP	23	4.50	RIDING ON STEP	149	4.05	12.42	CARRYING CAN/WASTE	7,420	4.91	250
GETTING IN/OUT CAB	19	3.72	OTHER	127	3.45	6.05	OTHER	5,883	3.89	173
RIDING IN CAB	16	3.13	GETTING IN/OUT CAB	120	3.26	10.00	GETTING IN/OUT CAB	5,813	3.85	306
OPER PACKING MECH	11	2.15	NO SPECIFIC ACTIVITY	108	2.93	15.43	RIDING IN CAB	5,722	3.79	358
THROWING/CATCHING	10	1.96	RIDING IN HOPPER	105	2.85	35.00	RIDING IN HOPPER	4,042	2.67	1,347
NO SPECIFIC ACTIVITY	10	1.96	PUSH WASTE IN HOPPER	75	2.04	25.00	NO SPECIFIC ACTIVITY	4,013	2.65	401
DUMP INTO TUB/CART	8	1.57	THROWING/CATCHING	64	1.74	10.67	OPER PACKING MECH	2,196	1.45	200
REPAIR/MAINTAIN VEH	7	1.37	OPER PACKING MECH	51	1.39	8.50	THROWING/CATCHING	1,627	1.08	163
WASHING/CLEARING	6	1.17	HOOK/UNHOOK TRAILER	30	0.82	15.00	REPAIR/MAINTAIN VEH	1,073	0.71	153
EMPTYING VEH/PACKER	5	0.98	REPAIR/MAINTAIN VEH	27	0.73	9.00	USING HAND TOOLS	600	0.46	130
USING HAND TOOLS	5	0.98	DUMP INTO TUB/CART	10	0.27	2.50	HOOK/UNHOOK TRAILER	525	0.35	262
RIDING IN HOPPER	3	0.59	USING HAND TOOLS	9	0.24	4.50	GUIDE/DIRECT VEH	493	0.33	246
PUSH WASTE IN HOPPER	3	0.59	GUIDE/DIRECT VEH	8	0.22	4.00	DUMP INTO TUB/CART	382	0.25	48
RIDING IN TRUCK BED	2	0.39	EMPTYING VEH/PACKER	7	0.19	7.00	EMPTYING VEH/PACKER	277	0.18	55
GUIDE/DIRECT VEH	2	0.39	AGGRESSIVE ACT	2	0.05	2.00	WASHING/CLEARING	201	0.13	33
PUSH/PULL IN/OUT CAN	2	0.39	PUSH/PULL IN/OUT CAN	1	0.03	1.00	PUSH/PULL IN/OUT CAN	131	0.09	65
HOOK/UNHOOK TRAILER	2	0.39	TOTAL	3,680	100.00	10.82	AGGRESSIVE ACT	72	0.05	72
OFFICE/JANITOR WORK	1	0.20					RIDING IN TRUCK BED	20	0.01	10
AGGRESSIVE ACT	1	0.20					OFFICE/JANITOR WORK	10	0.01	10
TOTAL	511	100.00					TOTAL	151,164	100.00	296

FIGURE 13A

ALL USERS
ACCIDENT SITES RANKED FROM HIGHEST TO LOWEST
PERCENT OF OSHA RECORDABLE INJURIES

ORTING PERIOD: JANUARY - MARCH 1976

INITIONS: OSHA RECORDABLE CASES INCLUDE MEDICAL TREATMENT
ES (I.E. NON-FATAL CASES WITHOUT LOST WORKDAYS), AND LOST WORKDAY,
MANENT DISABILITY AND FATAL CASES. FIRST AID INJURIES ARE NOT INCLUDED.

ACCIDENT SITE	OSHA RECORDABLE INJURIES NO.	%
EET AT BACK OF TRUCK	126	24.66
ON VEHICLE	88	17.22
EET AT CURB	82	16.05
TOMER YARD	47	9.20
IER	40	7.83
EY AT BACK OF TRUCK	28	5.48
EY AT CURB	20	3.91
TOMER DRIVEWAY	17	3.33
ALLEY	13	2.54
STREET	10	1.96
DFILL, IN/ON VEHICLE-DUMP SITE	10	1.96
DFILL, AT BACK OF TRUCK	9	1.76
INERATOR/TRANSFER STATION/RECYCLING LOCATION NOT* IN/ON VEHICLE (DUMPING FLOOR)	7	1.37
APPLICABLE	5	0.98
INERATOR/TRANSFER STATION/RECYCLING LOCATION RAGE/SHOP	4	0.78
DFILL, GATEHOUSE/OFFICE	2	0.39
CUSTOMER RESIDENCE	1	0.20
DFILL GARAGE	1	0.20
DFILL, IN/ON VEHICLE-ROAD TO DUMP SITE	1	0.20
TAL	511	100.00

FIGURE 13B

ALL USERS
ACCIDENT SITES RANKED FROM HIGHEST TO LOWEST
PERCENT OF WORKDAYS LOST

REPORTING PERIOD: JANUARY - MARCH 1976

DEFINITIONS: OSHA RECORDABLE CASES INCLUDE MEDICAL TREATMENT CASES (I.E. NON-FATAL CASES WITHOUT LOST WORKDAYS), AND LOST WORKDAY, PERMANENT DISABILITY AND FATAL CASES. FIRST AID INJURIES ARE NOT INCLUDED.

ACCIDENT SITE	WORKDAYS LOST NO.	%	AVG WKDYS LO LOST WKDYS C
STREET AT BACK OF TRUCK	978	26.58	10.19
IN/ON VEHICLE	938	25.49	15.90
STREET AT CURB	658	17.88	10.61
OTHER	287	7.80	11.96
CUSTOMER YARD	196	5.33	6.76
ALLEY AT BACK OF TRUCK	141	3.83	9.40
MID STREET	133	3.61	19.00
INCINERATOR/TRANSFER STATION/RECYCLING LOCATION *NOT* IN/ON VEHICLE (DUMPING FLOOR)	55	1.49	18.33
CUSTOMER DRIVEWAY	54	1.47	6.00
ALLEY AT CURB	53	1.44	6.62
LANDFILL, IN/ON VEHICLE - DUMP SITE	52	1.41	6.50
LANDFILL, AT BACK OF TRUCK	40	1.09	6.67
MID ALLEY	33	0.90	4.71
LANDFILL, IN/ON VEHICLE - ROAD TO DUMP SITE	24	0.65	24.00
NOT APPLICABLE	18	0.49	6.00
LANDFILL GARAGE	9	0.24	9.00
INCINERATOR/TRANSFER STATION/RECYCLING LOCATION GARAGE/SHOP	7	0.19	7.00
IN CUSTOMER RESIDENCE	4	0.11	4.00
TOTAL	3,680	100.00	0.00

FIGURE 13C

ALL USERS
ACCIDENT SITES RANKED FROM HIGHEST TO LOWEST
PERCENT OF DIRECT COSTS

ORTING PERIOD: JANUARY - MARCH 1976

INITIONS: OSHA RECORDABLE CASES INCLUDE MEDICAL TREATMENT
ES (I.E. NON-FATAL CASES WITHOUT LOST WORKDAYS), AND LOST WORKDAY,
MANENT DISABILITY AND FATAL CASES. FIRST AID INJURIES ARE NOT INCLUDED.
ECT COSTS INCLUDE MEDICAL EXPENSES, WORKER'S COMPENSATION BENEFITS AND
E CONTINUATION BENEFITS (E.G., INJURY LEAVE) ONLY. INDIRECT COSTS
NOT INCLUDED.

ACCIDENT SITE	DIRECT COSTS AMT.	%	AVG COSTS/ OSHA REC INJ
EET AT BACK OF TRUCK	38,866	25.71	308
ON VEHICLE	28,094	18.59	329
EET AT CURB	27,752	18.36	338
ER	16,445	10.88	411
EY AT BACK OF TRUCK	10,920	7.22	390
TOMER YARD	7,913	5.23	168
DFILL, IN/ON VEHICLE - DUMP SITE	4,355	2.88	435
STREET	3,623	2.40	362
EY AT CURB	2,651	1.75	133
TOMER DRIVEWAY	2,585	1.71	152
INERATOR/TRANSFER STATION/RECYCLING LOCATION			
OT* IN/ON VEHICLE (DUMPING FLOOR)	2,348	1.55	335
ALLEY	1,787	1.18	137
DFILL, IN/ON VEHICLE - ROAD TO DUMP SITE	1,280	0.85	1,280
DFILL, AT BACK OF TRUCK	952	0.63	106
DFILL GARAGE	585	0.39	585
APPLICABLE	455	0.30	91
INERATOR/TRANSFER STATION/RECYCLING LOCATION			
RAGE/SHOP	320	0.21	80
CUSTOMER RESIDENCE	214	0.14	214
DFILL, GATEHOUSE/OFFICE	20	0.01	10
TAL	151,164	100.00	296

FIGURE 14

ALL USERS
TYPES OF WASTE INVOLVED RANKED FROM HIGHEST TO LOWEST PERCENT OF
OSHA RECORDABLE INJURIES, WORKDAYS LOST AND DIRECT COSTS

REPORTING PERIOD: JANUARY - MARCH 1976

DEFINITIONS: OSHA RECORDABLE CASES INCLUDE MEDICAL TREATMENT CASES (I.E. NON-FATAL CASES WITHOUT LOST WORKDAYS), AND LOST WORKDAY, PERMANENT DISABILITY AND FATAL CASES. FIRST AID INJURIES ARE NOT INCLUDED.
DIRECT COSTS INCLUDE MEDICAL EXPENSES, WORKER'S COMPENSATION BENEFITS AND WAGE CONTINUATION BENEFITS (E.G., INJURY LEAVE) ONLY. INDIRECT COSTS ARE NOT INCLUDED.

OSHA RECORDABLE INJURIES			WORKDAYS LOST				DIRECT COSTS			
TYPE OF WASTE	OSHA REC INJ NO.	OSHA REC INJ %	TYPE OF WASTE	WKDYS LOST NO.	WKDYS LOST %	AVG/LOST WKDY CASE	TYPE OF WASTE	DIRECT COSTS AMT.	DIRECT COSTS %	AVG COSTS/ OSHA REC INJ
NOT APPLICABLE	345	67.51	NOT APPLICABLE	2,643	71.82	11.06	NOT APPLICABLE	105,178	69.58	305
NO OUTSTANDING CHAR	47	9.20	NO OUTSTANDING CHAR	349	9.48	10.26	NO OUTSTANDING CHAR	13,053	8.63	278
GLASS	29	5.68	OTHER	223	6.06	15.93	WOOD/LOGS/LUMBER	8,067	5.34	1,008
OTHER	22	4.31	GLASS	130	3.53	7.65	OTHER	5,119	3.39	233
DUST/ASHES IN WASTE	15	2.94	NOXIOUS CHEMICALS	75	2.04	37.50	GLASS	4,668	3.09	161
SHRUBBERY,UNBUNDLED	13	2.54	WOOD/LOGS/LUMBER	64	1.74	9.14	GRASS/WEEDS/LEAVES	3,831	2.53	1,916
WOOD/LOGS/LUMBER	8	1.57	SHRUBBERY,UNBUNDLED	48	1.30	8.00	OTHER SHARP OBJECT	3,495	2.31	583
OTHER SHARP OBJECT	6	1.17	GRASS/WEEDS/LEAVES	36	0.98	36.00	ROCKS/CONCRETE	1,986	1.31	662
FURNITURE/APPLIANCES	6	1.17	SHRUBBERY,BUNDLED	32	0.87	32.00	NOXIOUS CHEMICALS	1,674	1.11	335
NOXIOUS CHEMICALS	5	0.98	OTHER SHARP OBJECT	31	0.84	6.20	SHRUBBERY,UNBUNDLED	1,562	1.03	120
SHRUBBERY,BUNDLED	3	0.59	ROCKS/CONCRETE	20	0.54	10.00	SHRUBBERY,BUNDLED	725	0.48	515
ROCKS/CONCRETE	3	0.59	DUST/ASHES IN WASTE	12	0.33	2.00	DUST/ASHES IN WASTE	700	0.46	47
HYPODERMIC NEEDLES	2	0.39	PAPER	10	0.27	5.00	PAPER	553	0.37	277
GRASS/WEEDS/LEAVES	2	0.39	FURNITURE/APPLIANCES	4	0.11	2.00	FURNITURE/APPLIANCES	393	0.26	66
PAPER	2	0.39	RATS/HOSTILE CREATURE	2	0.05	2.00	HYPODERMIC NEEDLES	95	0.06	48
PALM FRONDS	1	0.20	POISON IVY/OAK	1	0.03	1.00	POISON IVY/OAK	45	0.03	45
RATS/HOSTILE CREATURE	1	0.20	TOTAL	3,680	100.00	10.82	PALM FRONDS	20	0.01	20
POISON IVY/OAK	1	0.20					TOTAL	151,164	100.00	296
TOTAL	511	100.00								

SECTION III

SAFETY NEWS

Backing Hazard Protection

Safety devices are available that can help to reduce hazards associated with backing of refuse trucks and other vehicles.

A device suitable for multi-man crew operations includes a push button on the rear side of the truck. This button must be pressed and held down in order to hold off the service brakes when the vehicle is in reverse gear. The vehicle will come to a quick stop if the observer at the rear side of the truck releases the button because he trips, falls or sees an obstruction to safe backing.

A more complex system, illustrated in FIGURE 15, includes a sensing arm across the full width of the back of the truck. This system automatically applies the truck's air brakes whenever the arm contacts any solid object while the truck is backing.

The purpose of the backing safety device system, or similar device is to stop the backing truck quickly enough to avoid damage or injury to obstruction hit by the bar. In the FIGURE the sensing arm hit the post, which stops the truck before the truck itself hits the post. Similarly if the arm hits a person, the truck will, in principle, automatically stop before the truck runs over the person.

Backing safety devices which operate as described above are commercially available. Bak-Safe Systems Inc. of Orange, California quotes prices of approximately $300 for the push button system and $560 for the sensing arm system.*

In order to be effective, safety devices such as those described above must be (a) in proper working order and (b) used for the intended purpose. If these conditions are <u>not</u> met, the presence of the device can lead to new hazards. For example, a push button which becomes accidentally or deliberately jammed so that it will hold down in the on position, may give a driver a false sense of security that an observer is present and that there are no obstructions to backing. There is some danger that the sensing arm system may be used routinely as an indicator

*Data concerning commercial products is given for information purposes only. No endorsement of these products by SAFETY SCIENCES or by the Environmental Protection Agency is intended. No other manufacturers of similar devices are known at present. If others become known their names will be listed in future reports.

FIGURE 15

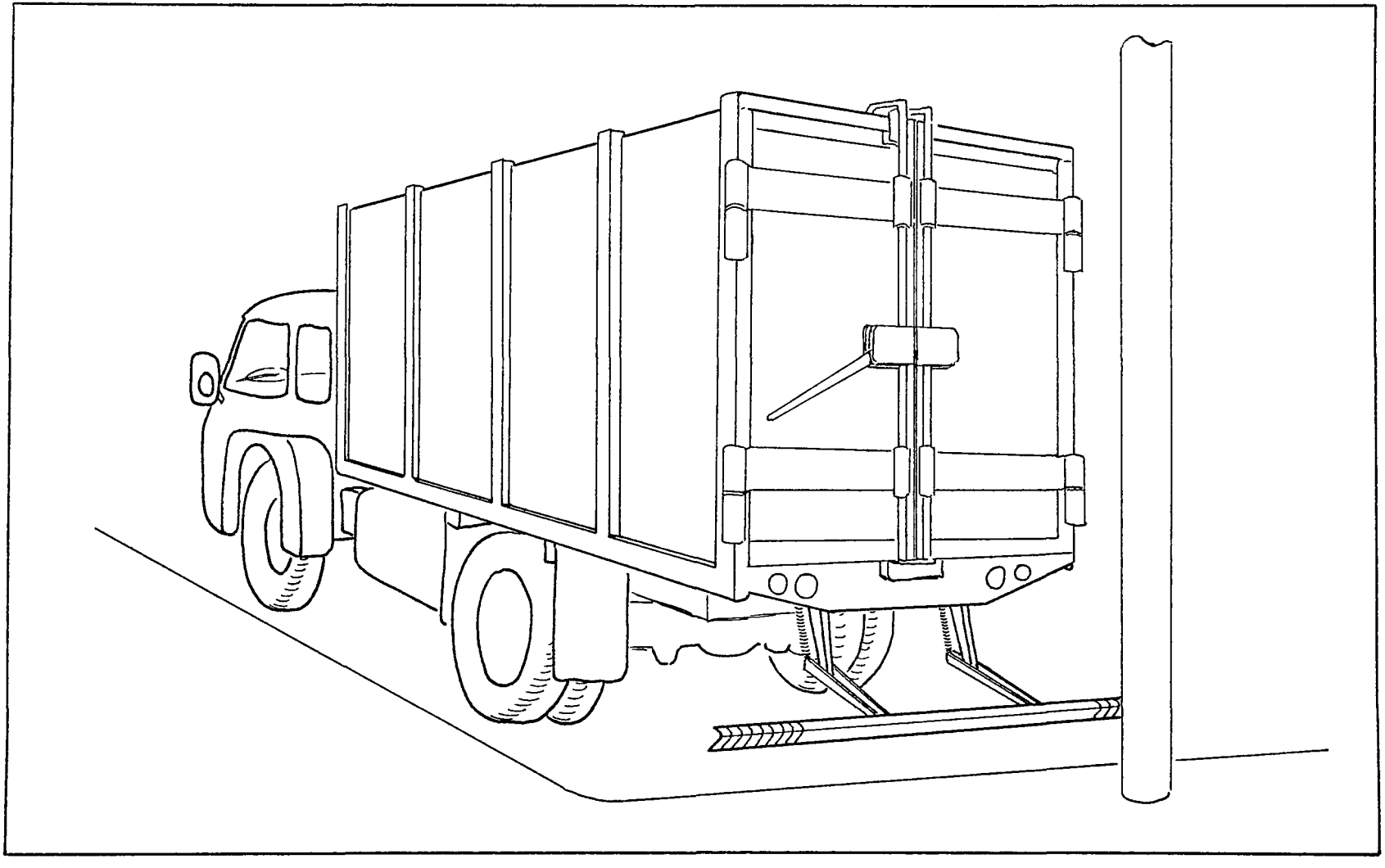

DIAGRAM OF BAK-SAFE BAR

ON FRONT-END LOADER

of safe backing boundaries rather than as an emergency device to give added protection in the event a backing hazard is missed by the driver. Note that a driver who relies on the arm could miss seeing a child who crawls in front of the arm, but behind the back wheels of the truck, to retrieve a ball in the roadway for example.

It is concluded that, in order to gain full advantage from backing safety devices, they must be (a) properly maintained in working condition, (b) used as intended, and (c) designed and constructed so as to minimize failures and encourage correct operation. Within these limitations, they may have a large potential for reducing equipment damage and, in certain cases, reducing injuries.

IRIS Users wishing to learn more about the Bak-Safe system may contact the:

KG & T Industries, Inc.
1150-D West Briardale
Orange, California 92685

Phone: (714) 998-3121

Accident Trends
2nd Quarter 1976

IRIS

EXHIBIT 3

ACCIDENT TRENDS

IN THE SOLID WASTE MANAGEMENT INDUSTRY

EMPLOYEE CHARACTERISTICS

QUARTER: APRIL 1 TO JUNE 30, 1976

DEVELOPED BY SAFETY SCIENCES, DIVISION OF WSA INC.,
FOR THE U.S. ENVIRONMENTAL PROTECTION AGENCY
OFFICE OF SOLID WASTE MANAGEMENT PROGRAMS
UNDER CONTRACT NO. 68-03-0231

safety sciences Division of WSA Inc., 11772 Sorrento Valley Road
San Diego, CA 92121 (714) 755-9359 & 452-1010

Accident Trends in the Solid Waste Management Industry is developed quarterly using data from IRIS (the Injury Reporting and Information System for Solid Waste Management). Accident Trends is designed to summarize and discuss the data from all IRIS users and to provide data and conclusions which affect the industry as a whole. A companion volume, the QSMR (Quarterly Safety Management Report), is developed individually for each IRIS user who reported injuries during the quarter. Each QSMR concentrates only on the injuries of the individual IRIS user for which it is prepared.

IRIS is currently made up of 42 users. All possible care is taken to insure data quality. The nature of the data and the reports, however, precludes complete accuracy. Not all cases are closed by the end of the quarter. These accidents continue to be monitored. Occasionally, full lost time and cost data is not available. Consequently, the totals for these categories may be underestimates. A concerted effort is made to correct the lost time and cost figures and improve IRIS collection methods. The recommendations and countermeasures presented are suggestions that must be evaluated in terms of individual user's needs.

The purpose of this and other IRIS publications is to disseminate new ideas and alternative methods in the solid waste field. IRIS serves as a clearinghouse in this regard, but does not promote or endorse any method or product. Implementation of QSMR suggestions should be done only after careful evaluation by each user and at each user's discretion.

ACCIDENT TRENDS

IN THE SOLID WASTE MANAGEMENT INDUSTRY

EMPLOYEE CHARACTERISTICS

QUARTER: APRIL 1, 1976 THROUGH JUNE 30, 1976

TABLE OF CONTENTS

		Page
INTRODUCTION		iv
I.	DISCUSSION OF INJURY RATES BY EMPLOYEE CHARACTERISTICS AND PREVENTION METHODS	1-1
	1. Age	1-1
	2. Experience	1-6
	3. Height	1-11
	4. Weight	1-15
II.	SECOND QUARTER IRIS USER INDUSTRY-WIDE DATA	2-1

LIST OF FIGURES

		Page
FIGURES 1-1 to 1-3:	Injury Rates by Age Group for the Collection Division	1-2
FIGURE 1-4:	Distribution of the Employees' Ages	1-5
FIGURES 1-5 to 1-7:	Injury Rates by Experience Group for the Collection Division	1-7
FIGURE 1-8:	Distribution of the Employees' Experience	1-10
FIGURES 1-9 to 1-11:	Injury Rates by Height Group for the Collection Division	1-12
FIGURE 1-12:	Distribution of the Employees' Heights	1-15
FIGURES 1-13 to 1-15:	Injury Rates by Weight Group for the Collection Division	1-16
FIGURE 1-16:	Distribution of the Employees' Weights	1-19
FIGURE 2-1:	Description of Users by Operational Characteristics	2-4
FIGURE 2-2:	Summary of Injuries by Frequency, Severity, and Costs	2-8
FIGURE 2-3:	Comparison of Injury Rates and OSHA Days Lost for All Users	2-10
FIGURE 2-4:	Comparison of Direct Costs by Reporting Period for All Users	2-12
FIGURE 2-5:	Summary of Accident Factors for Selected Accident Characteristics with Highest Percent of OSHA Recordable Injuries, Workdays Lost and Direct Costs	2-14

INTRODUCTION

This is the Accident Trends report for the second quarter of 1976 (April 1 to June 30). This report is divided into two sections, a discussion of the special feature topic, Injury Rates by Employee Characteristics and Their Prevention Measures and a summary of the data for the quarter. The discussion in SECTION I will encompass the data since the instigation of IRIS in December 1975, but SECTION II relates only the injury rates and figures applicable to the second quarter of 1976.

Of the 42 IRIS users on-line during second quarter, 36 users reported injuries. Since the injury rates are based on man-hours of exposure, they reflect the various start-up periods of the IRIS users.

The time lost and direct costs shown on the FIGURES were provided as of September 30, the "closing date" for receiving data for the second quarter. Any cases where the time lost or direct cost data is incomplete are being monitored for updating.

SECTION I

DISCUSSION OF INJURY RATES BY EMPLOYEE CHARACTERISTICS AND PREVENTION METHODS

This is the Accident Trends report for the solid waste management industry for the second quarter of 1976. The injury factors addressed in this report are the employee characteristics of age, experience, height, and weight. An examination of how each employee characteristic affects the overall injury rates of the collection division is performed. Possible prevention methods to reduce the injury rates are also discussed.

Employee characteristics need to be examined to determine if the make-up of the collection work force affect the injury rates. If so, possible countermeasures can include employee selection and establishing standards for the employee characteristics.

The discussion in SECTION I encompasses the entire reporting period (from December 1975) while SECTION II presents the injury statistics for only the second quarter.

1. AGE

The age of a person is known to correlate with the person's ability to perform strenuous tasks such as garbage collection. The IRIS data (FIGURES 1-1 through 1-3) show a marked difference between the injury rates of older employees vs. younger employees. The younger age groups have more injuries but the older age groups have more severe injuries. This was also the findings of the Field Test of IRIS, which collected over 2,000 injuries. FIGURE 1-4 shows that the collection division employees are widely distributed in ages with slightly more employees under 35 years old.

Examining the OSHA incidence and lost workday cases rate (FIGURE 1-1), it is apparent that the employees above age 29 have less injuries, and the employees being least injured fall in age group "60-64 years". Also, the injury rates for the age groups after age 35 were all below the average line. The distance between the two graphs' points was much wider for the age groups under 30 years old. This indicates that the younger employees' injuries result in non-lost time more often than the older employees'. The slope of the decline of the graph decreased steadily after age 29 except at two points, "55-59 years" and ">64 years".

FIGURE 1-1

OSHA INCIDENCE RATES FOR OSHA RECORDABLE INJURIES
AND LOST WORKDAY CASES BY AGE GROUP
COLLECTION DIVISION

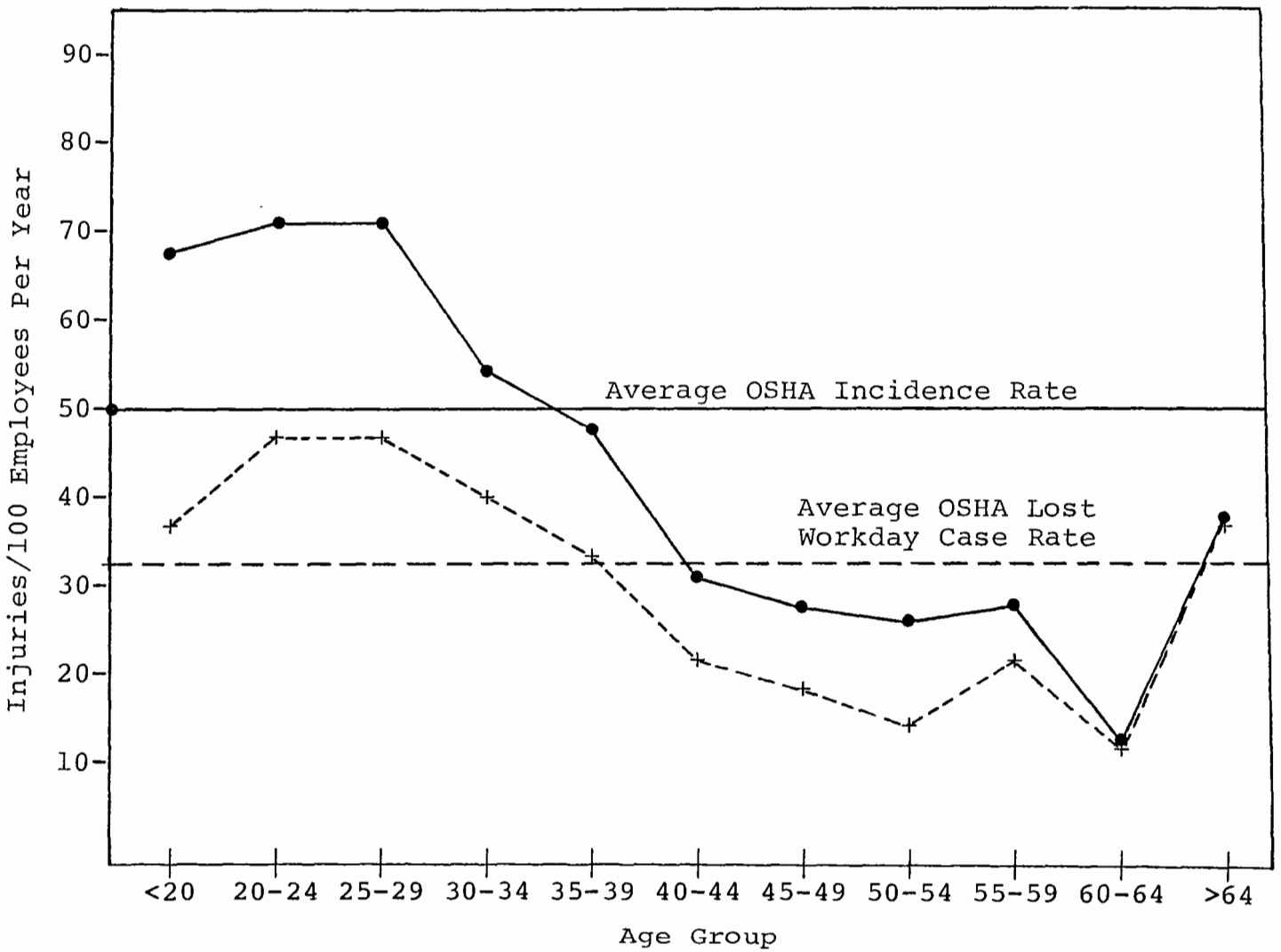

FIGURE 1-2

OSHA SEVERITY RATES
BY AGE GROUP
COLLECTION DIVISION

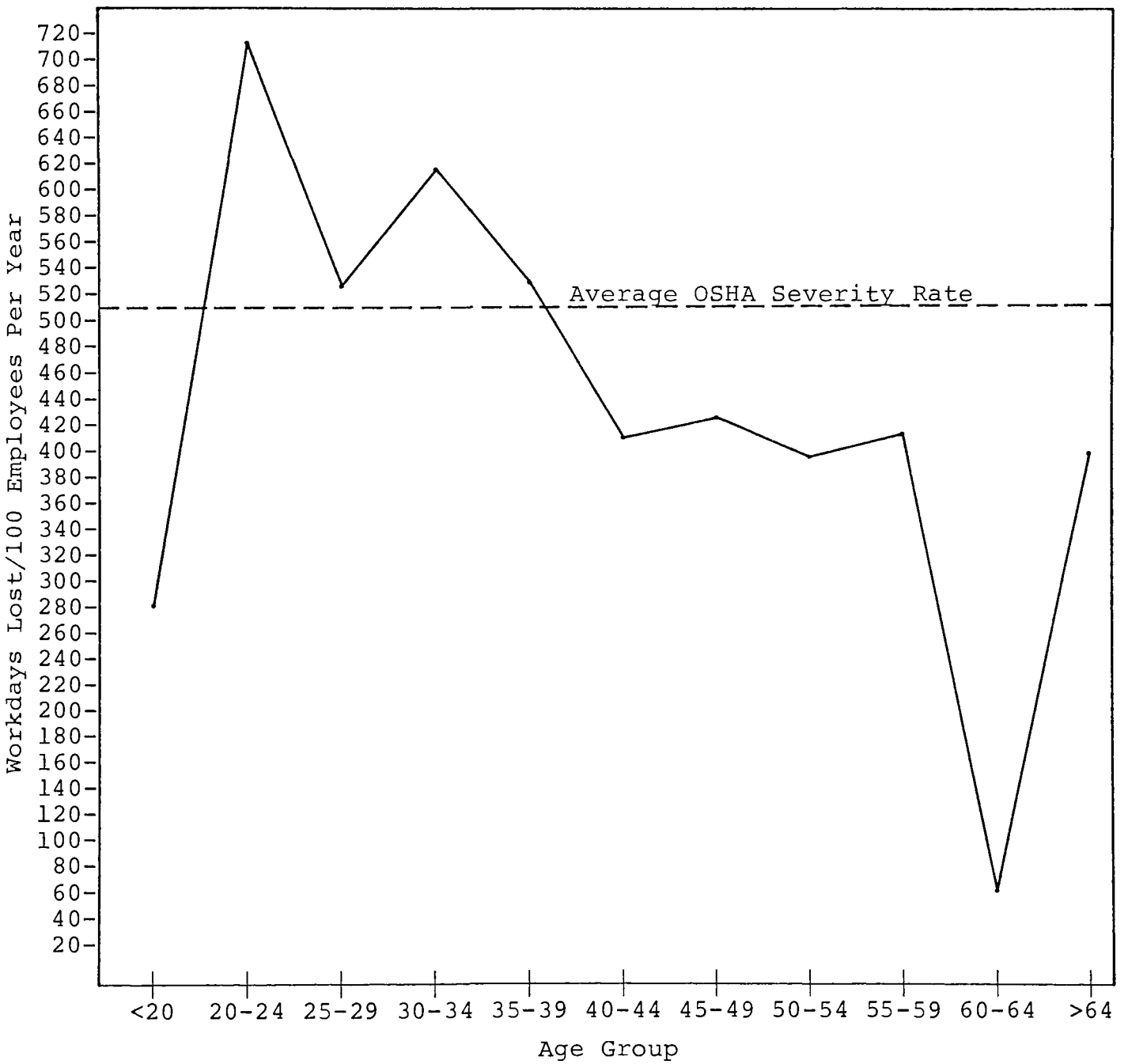

FIGURE 1-3

DIRECT COST PER MAN-YEAR
BY AGE GROUP
COLLECTION DIVISION

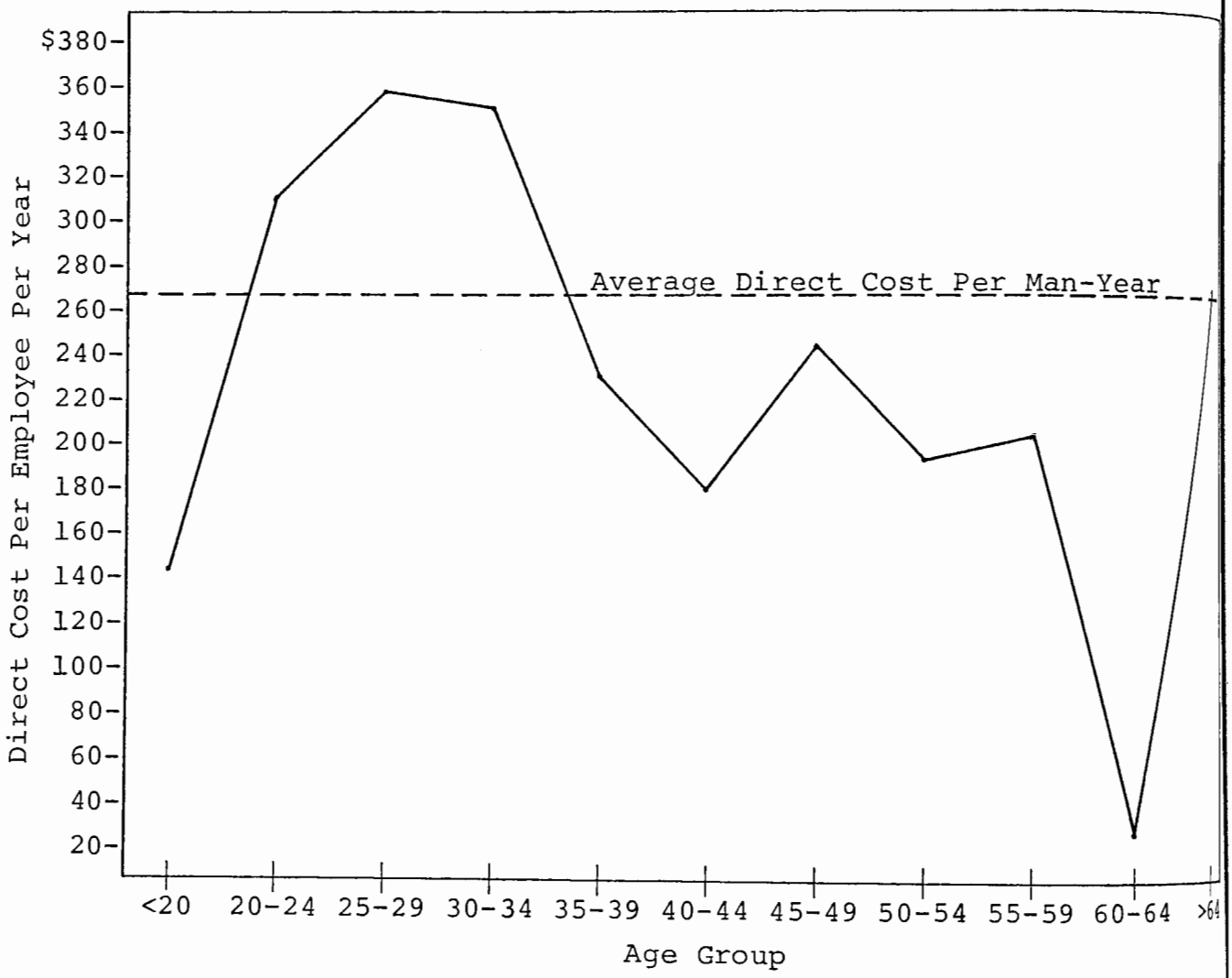

FIGURE 1-4

DISTRIBUTION OF THE EMPLOYEES' AGE

Age Group	% Man-Hours of Exposure
<20 YEARS	2%
20-24 YEARS	14%
25-29 YEARS	16%
30-34 YEARS	14%
35-39 YEARS	13%
40-44 YEARS	12%
45-49 YEARS	11%
50-54 YEARS	10%
55-59 YEARS	6%
60-64 YEARS	3%
>64 YEARS	<1%

The low incidence of injury for the older age groups is probably a function of the hazard risks of their respective jobs. The younger age groups are the collectors or laborers who have not built up seniroity while the older employees are the drivers who do not collect. The two tasks have a wide difference in the amount of exposure to hazards such as over-exertions while handling containers.

The severity rates (FIGURE 1-2) show more pronounced peaks. The older age groups still show lower severity rates, but increasing age does not affect it as dramatically. A similar curve also emerges with the direct cost per man-year graph (FIGURE 1-3). In all three FIGURES the highs and lows of the graphs were basically at the same points, but their relationship to each other, or the slope, varied.

There can be no suggested countermeasures with these results because age is not a factor that can be judged by itself. For instance, to resolve the problem of varying exposure to hazards, the age groups should be examined in cross tabulation with job classification, in particular the "collector non-drivers". The employee's physical abilities is both a function of age and physical condition. However, except for new hires, the employee's physical condition is maintained very well with the strenous work.

2. EXPERIENCE

The experience of the newly hired employees with collecting waste prior to beginning their jobs is of great concern to solid waste managers because of high turnover rates (14% of the work force had been on the job less than a year, FIGURE 1-8) and how much individual training, besides "on-the-job", should be provided. In addition, for the experienced employees, their retraining needs to be considered.

Experience refers to how long the employee has been working with the collection division at the organization. A separate study* performed by SAFETY SCIENCES on the effects of experience on injury rates for several high risk industry establishments revealed that the incidence rates were very high for the inexperienced employees. In fact, the new employees (less than one month's experience) had the highest, and the incidence rates dropped rapidly after a few months.

FIGURES 1-5 through 1-7 present the injury rates for the various experience groups. Note that the length of experience for each point on the bottom axis increases logarithmically rather than linearly, emphasizing the first few months of work experience.

The incidence rates shown in FIGURE 1-5 indicate also that the employees with less work experience have more injuries. In particular, the less than one month's experience employees had at least a fifth more injuries than any other experience group. The injury incidence rates also do not drop appreciably until after five years of experience. In fact, the injury rates remained above the average line until after five years of experience.

The width between the same points on the two curves represent the medical treatment only cases (non-lost time). The two curves indicate that the inexperienced employees were receiving more medical treatment cases than the employees that have been there over two years.

The severity and direct cost rates show a different trend. Instead of the most inexperienced employees suffering the high workdays lost rates, the peaks appeared at "2-3 months" and "2-10 years". As for the direct cost per man-year rates, an extremely high peak ($2,376) occurs at "2-3 months" experience that dwarfs the rest of the curve. This peak is due to

---

*Study performed for the Bureau of Labor Statistics on the "feasibility of securing data from employer records on the relationship between length of employment (experience) and the occupational injury incidence rate" in 1970.

FIGURE 1-5

OSHA INCIDENCE RATES FOR OSHA RECORDABLE INJURIES
AND LOST WORKDAY CASES BY EXPERIENCE GROUP
COLLECTION DIVISION

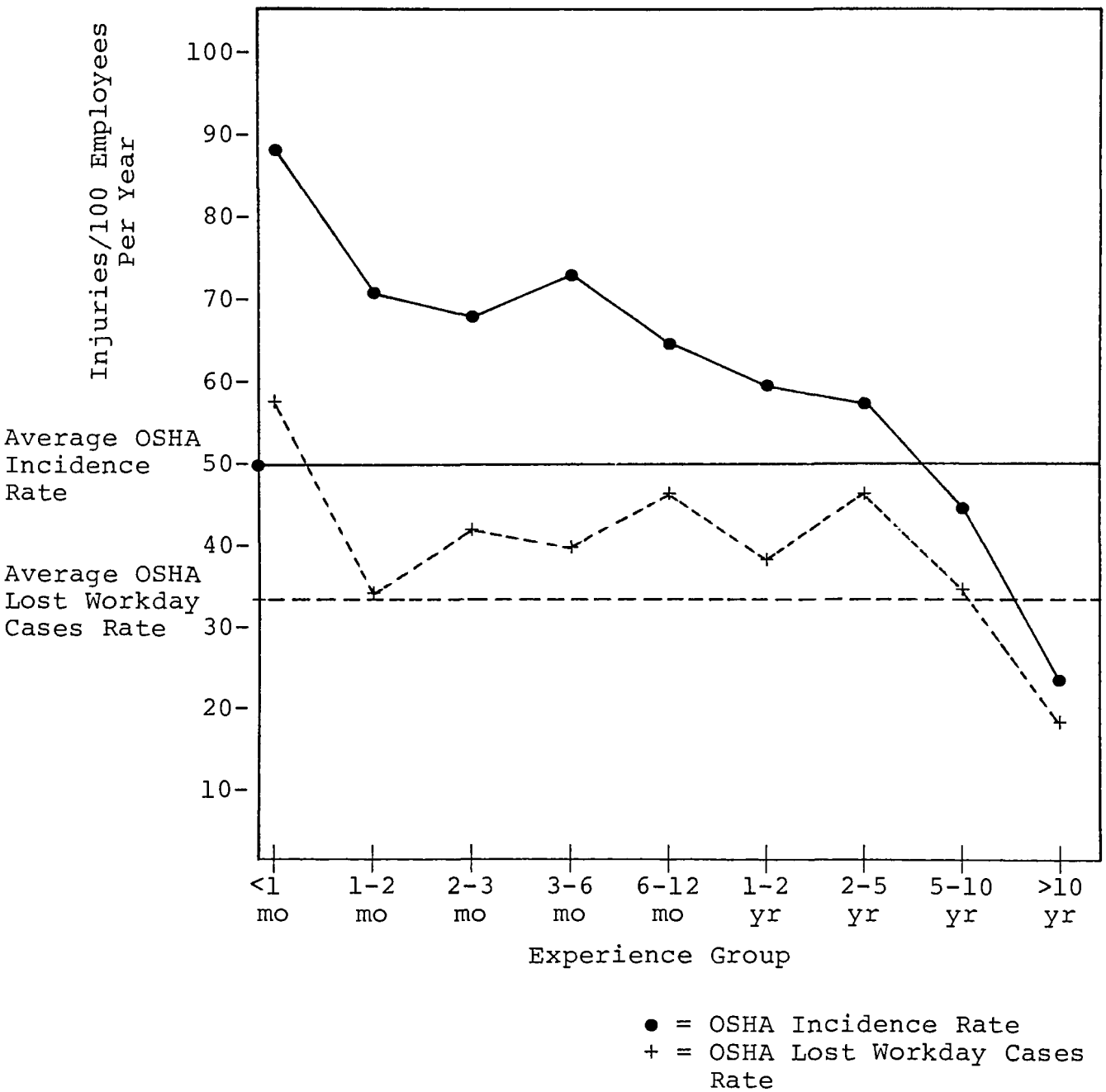

FIGURE 1-6

OSHA SEVERITY RATE
BY EXPERIENCE GROUP
COLLECTION DIVISION

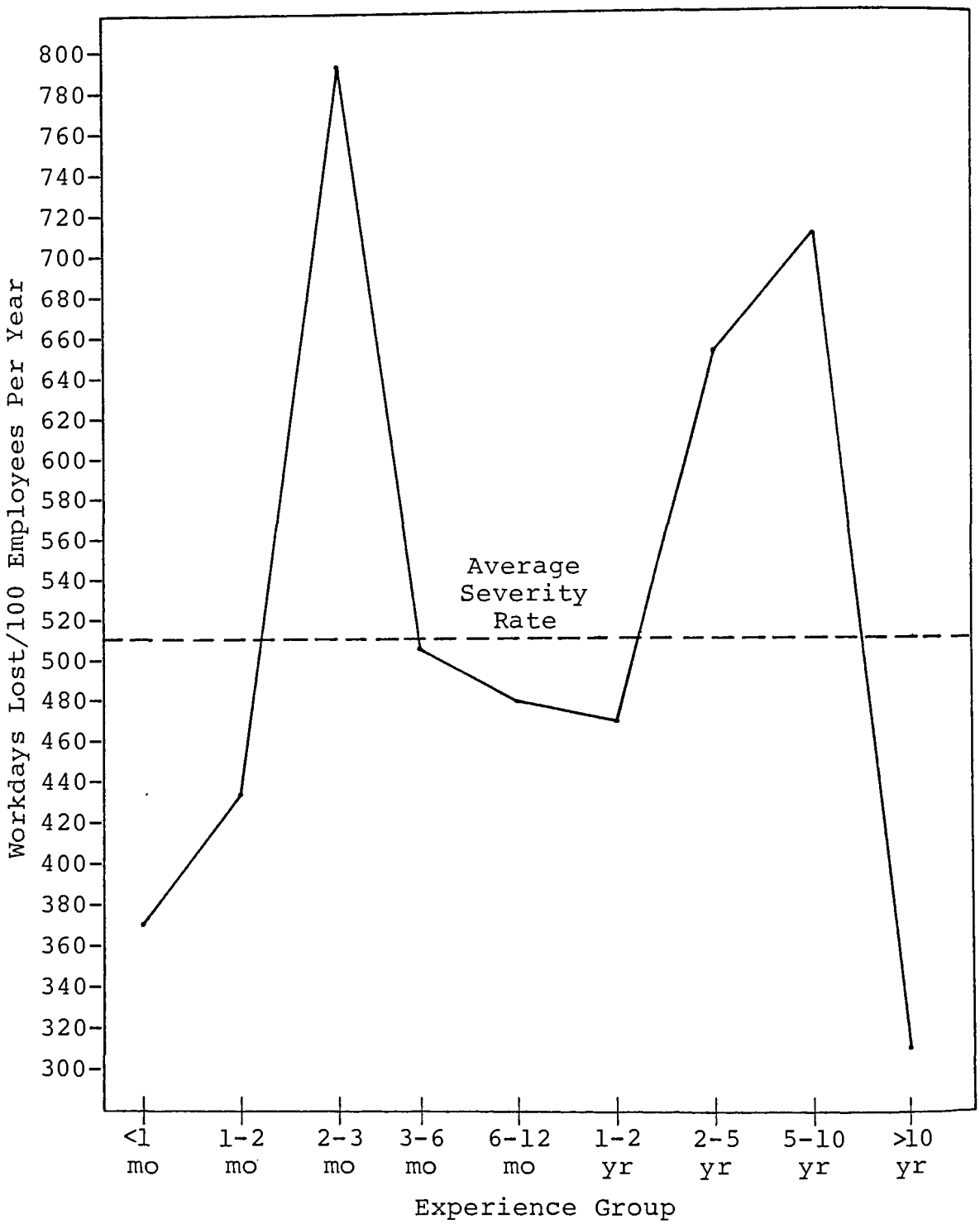

FIGURE 1-7

DIRECT COST PER MAN-YEAR
BY EXPERIENCE GROUP
COLLECTION DIVISION

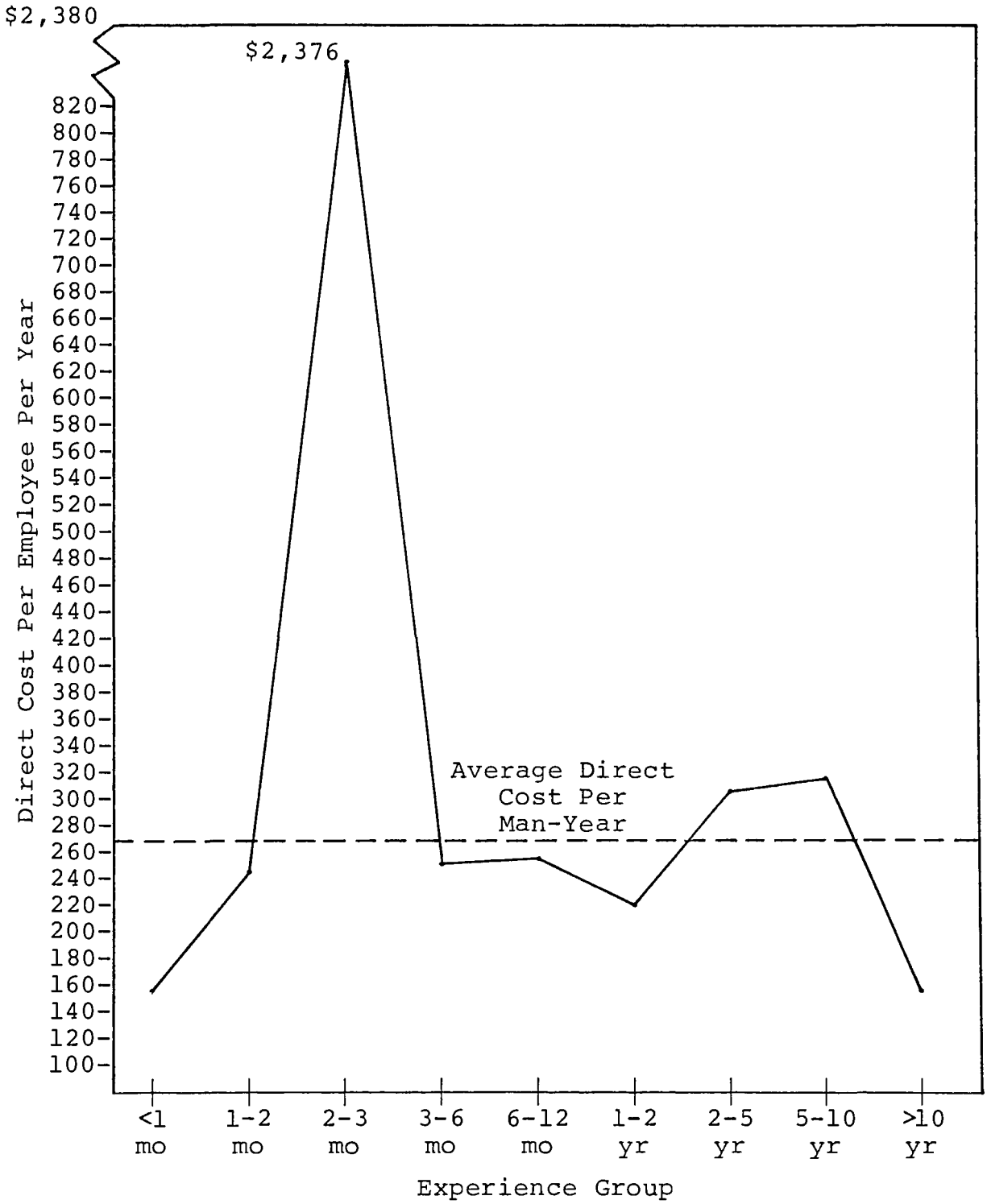

the fatality that occurred during this quarter. (The employee was clearing waste from behind the blade while standing inside the packer body of a side loader. The blade is operated from the cab, and his coworker thought he heard him say go ahead. He started the blade and found the employee caught between the blade and the hopper door. He might have slipped when he was stepping out. In any case, the coworker should not have started it until he saw that the employee was safely out.) A second slight peak occurred from "2-10 years" experience, but it is unknown whether it would have been higher than the other peak if the fatality did not occur there.

FIGURE 1-8

DISTRIBUTION OF THE EMPLOYEES' EXPERIENCE

Experience Group	% Man-Hours of Exposure
<1 MONTH	2%
1-2 MONTHS	1%
2-3 MONTHS	1%
<3 MONTHS	4%
3-6 MONTHS	3%
6-12 MONTHS	7%
1-2 YEARS	9%
2-5 YEARS	19%
5-10 YEARS	24%
>10 YEARS	30%

The conclusions that can be reached concerning experience is that nine out of ten of the newly hired employees are likely to get injured on the first month of collecting waste. However, even after two years of experience two out of three of the employees were still being injured. In addition, for some unevaluated reason the employees receive more severe, and therefore more costly, injuries during the period of "2-3 months" experience and "2-10 years" experience. These two peaks need to be examined for the accident types occurring to determine whether certain accident types, such as back strains develop with time.

In any case, preliminary structured training of newly hired employees is indicated by the data. This needs to be performed prior to the employees beginning work. The training area that requires the most emphasis because of its frequency of injury as well as because it can be affected by

training is container handling: testing the container, lifting the container properly, and dumping the container properly. Forty percent of the injuries this quarter occurred as the employees were lifting or dumping the container.

In addition, the data indicates that the experienced employees were still experiencing high (above average) injury rates. The sharp dip in incidence rates after five years of experience may only be a reflection of job class changes due to promotion. For instance, the newly hired employees are usually hired into the more hazardous job class of "collector non-driver" while with time he can be promoted to a less hazardous position of "driver non-collector".

The severity rate curve indicates retraining may be most effective after two months on the job and after two years. Additional data may be necessary to determine whether this trend holds true. The retraining of employees, of course, requires the safety department to maintain adequate records on the date of hire into a specific job class and when the employee was trained on what. An additional entry on the employee cards could also indicate previous injuries. With an adequate record-keeping system, the employees who need training can be spotted easily.

Another training consideration is the automatic retraining of an injured employee specifically on the correct method of performing the task he was performing when injured. This should be effected prior to his returning to full duties.

Once training is performed, however, responsibility does not end. Supervision is also an integral part of training to reinforce the training. Reverting to old incorrect methods could be controlled with supervision.

3. HEIGHT

The height of the employee may be a factor in relationship to certain tasks that require having the use of the lower spine such as in lifting and dumping. A taller person's fulcrum of bending over, and therefore the stress placed on the lower back muscles, is at a higher point. He has to bend further to lift or dump the container than a shorter person. FIGURE 1-12 indicates that the average solid waste worker was between 5'7" and 6' in height.

FIGURE 1-9

OSHA INCIDENCE RATES FOR OSHA RECORDABLE INJURIES
AND LOST WORKDAY CASE BY HEIGHT GROUP
COLLECTION DIVISION

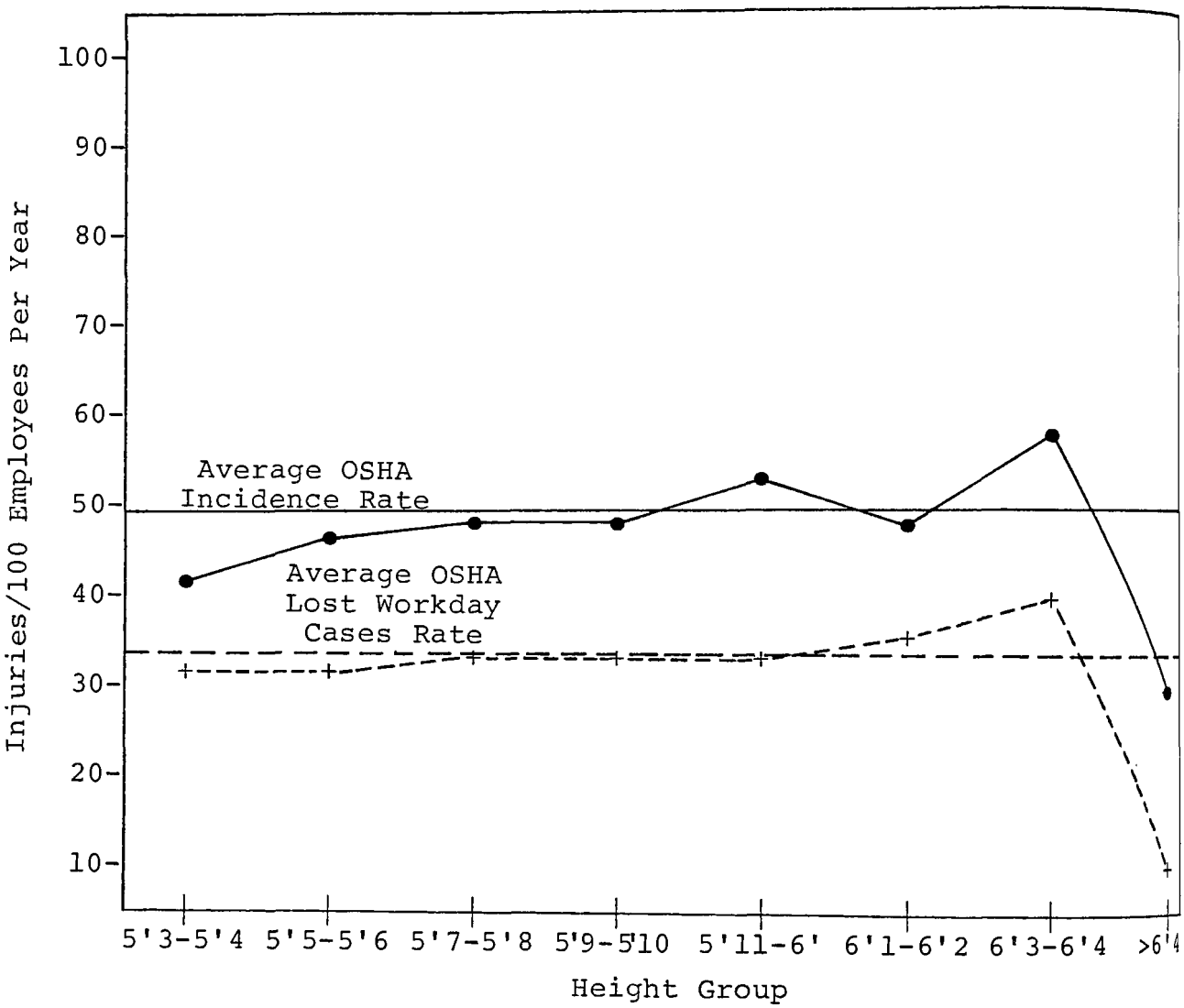

● = OSHA Incidence Rate
+ = OSHA Lost Workday Cases Rate

FIGURE 1-10

OSHA SEVERITY RATE
BY HEIGHT GROUP
COLLECTION DIVISION

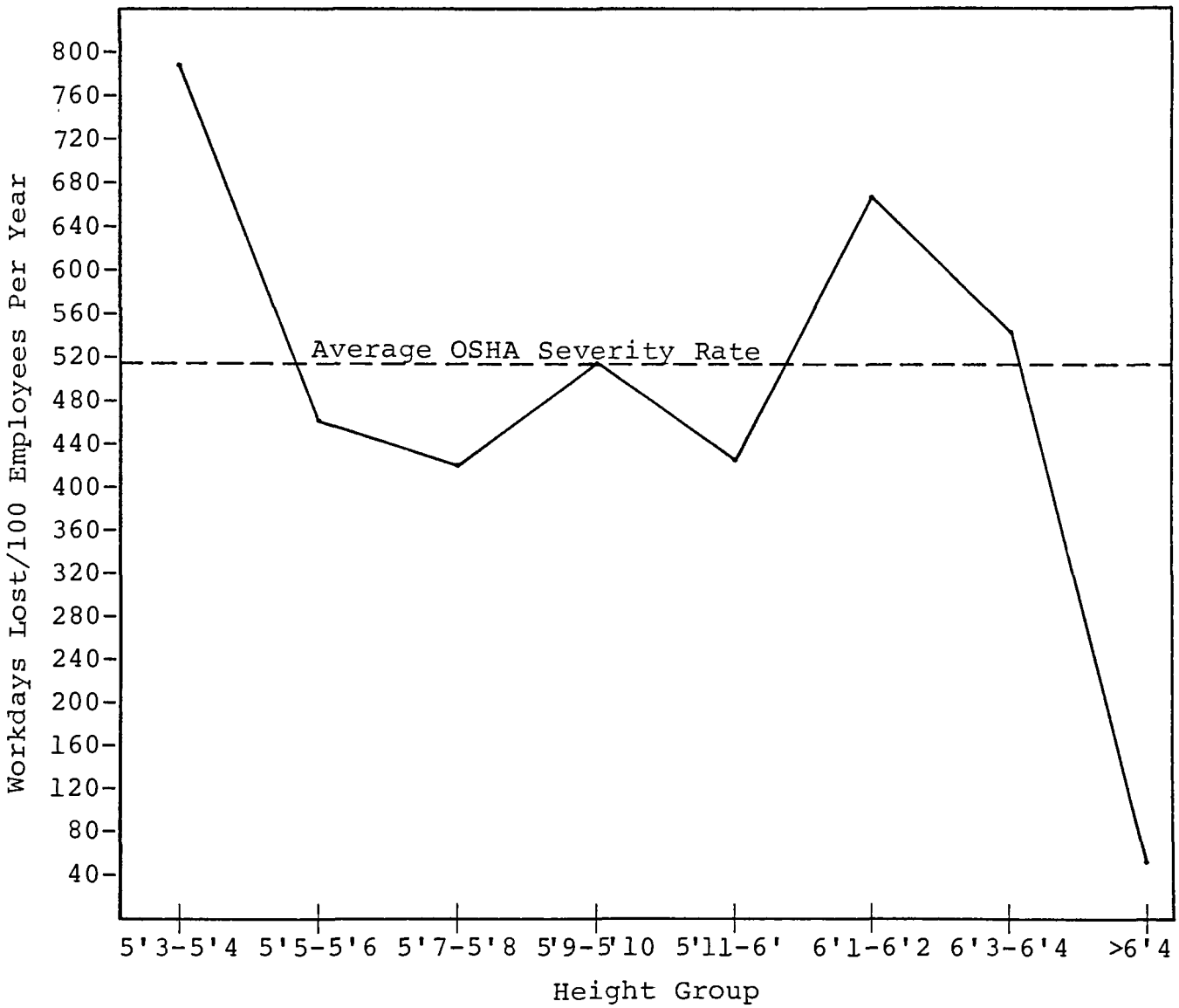

FIGURE 1-11

DIRECT COST PER MAN-YEAR
BY HEIGHT GROUP
COLLECTION DIVISION

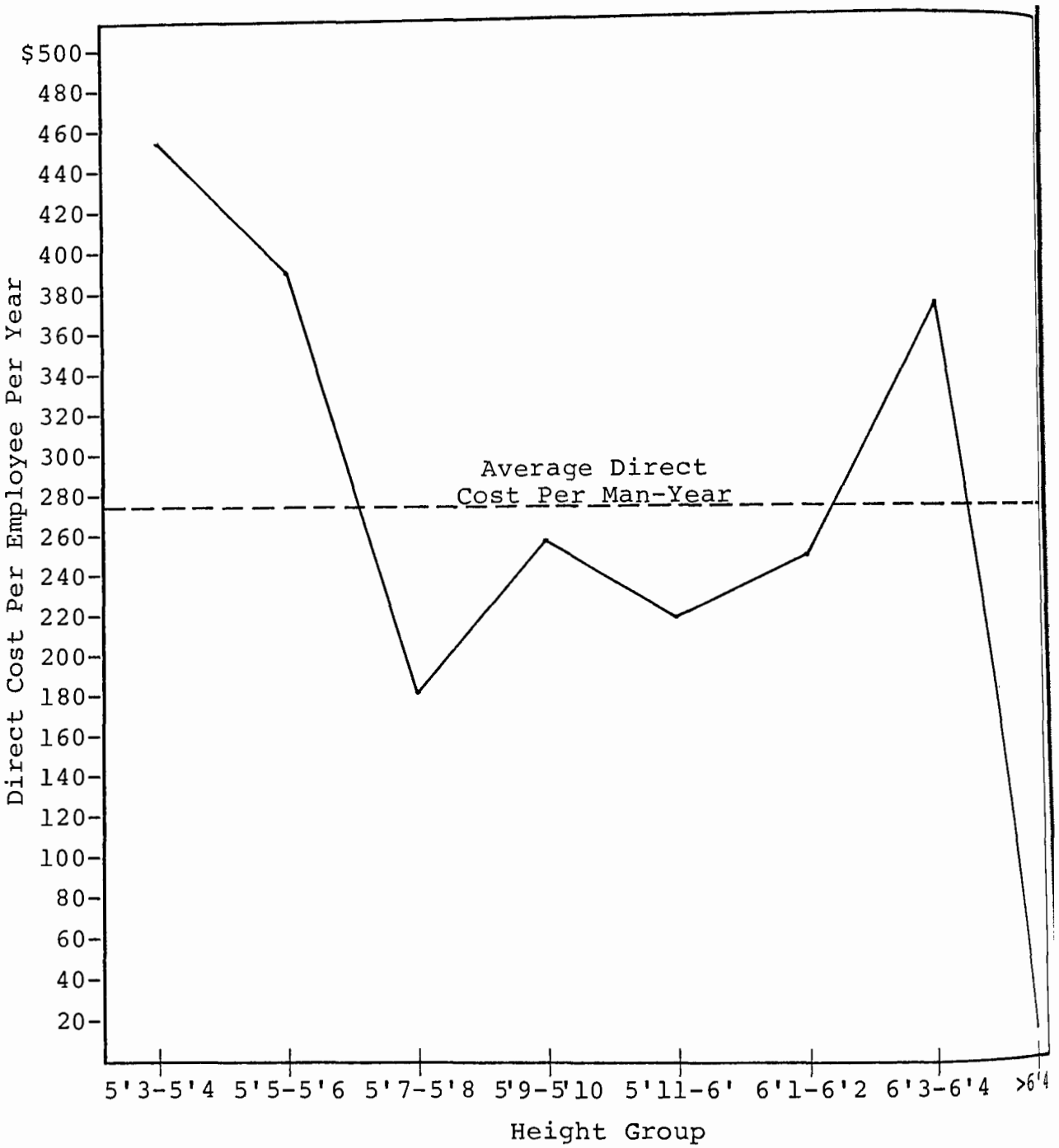

FIGURE 1-12

DISTRIBUTION OF THE EMPLOYEES' HEIGHTS

Height Group	% of Man-Hours of Exposure
<5'3"	1%
5'3" - 5'4"	3%
5'5" - 5'6"	12%
5'7" - 5'8"	21%
5'9" - 5'10"	23%
5'11" - 6'	22%
6'1" - 6'2"	12%
6'3" - 6'4"	3%
>6'4"	<1%

FIGURES 1-9 through 1-11 present the injury rates by the various height groups, which were in increments of two inches. They appear to indicate that the over six feet tall employees, in particular 6'3"-6'4", were having problems with injuries. This height group had the highest OSHA incidence and lost workday cases rates. It also shows corresponding peaks for the severity rate and direct cost per man-year rates. However, the first height group, 5'3"-5'4", had the highest severity and direct cost per man-year rates.

These FIGURES may indicate the unsuitability of the work for the short and tall employees. There are no standards for employee selection in this industry, but further data analyses is necessary before IRIS can make any recommendations. For instance, only the employees that handle the containers (e.g., collector non-drivers) should be examined. This group of injuries can be examined for the type of container for the lifting accidents and the sill height of equipment for the dumping accidents. This, however, requires a much larger data base to be statistically valid.

4. WEIGHT

The weights of the employees being injured may have some correlation to injury rates. However, the data did not prove conclusive. The weights of the employees could probably not be analyzed in a useful way without being linked to the height of the employee at the same time. FIGURE 1-16 shows that the average weight of the solid waste worker ranged from 150-200 pounds.

FIGURE 1-13

OSHA INCIDENCE RATES FOR OSHA RECORDABLE INJURIES
AND LOST WORKDAY CASES BY WEIGHT GROUP
COLLECTION DIVISION

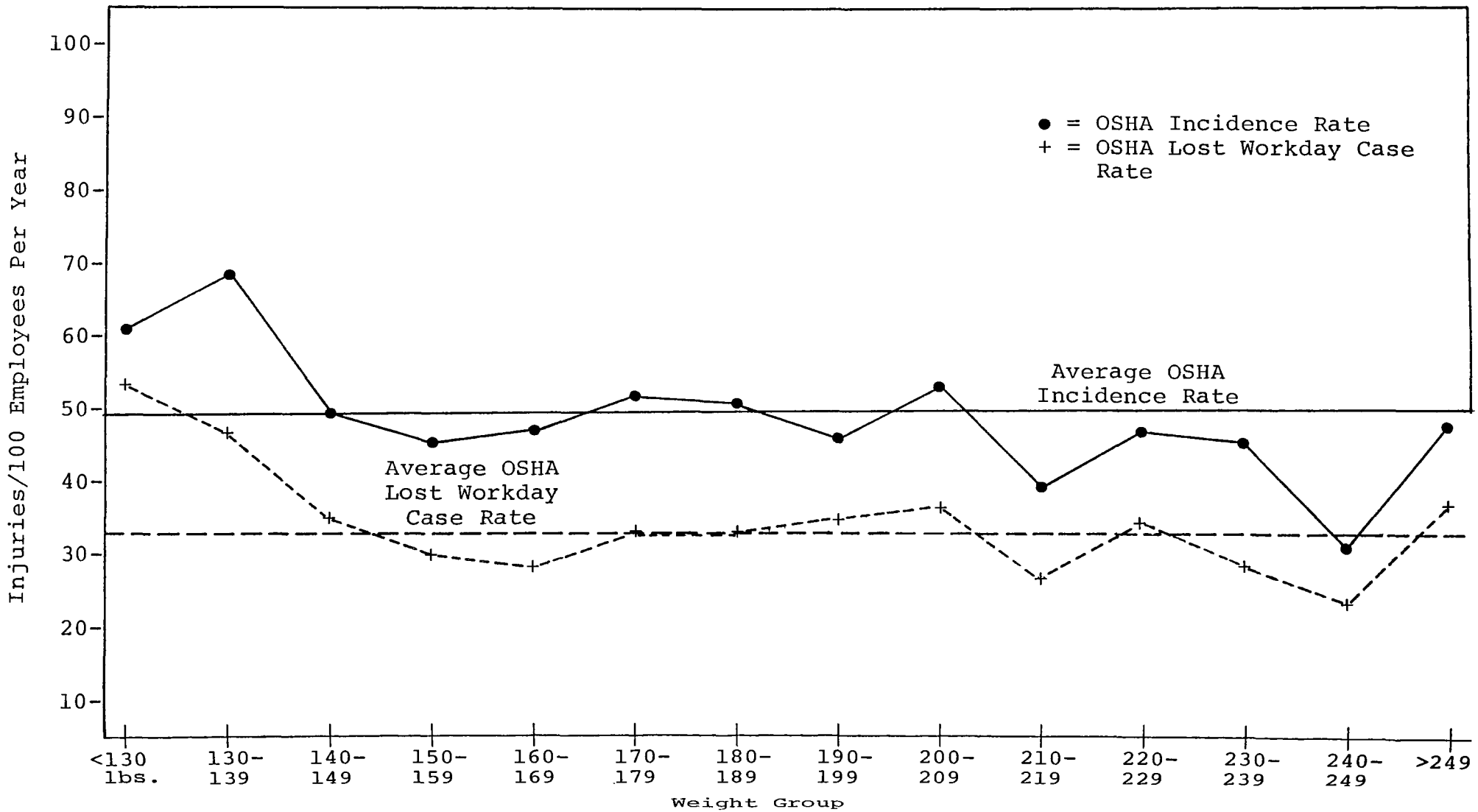

FIGURE 1-14

OSHA SEVERITY RATE
BY WEIGHT GROUP
COLLECTION DIVISION

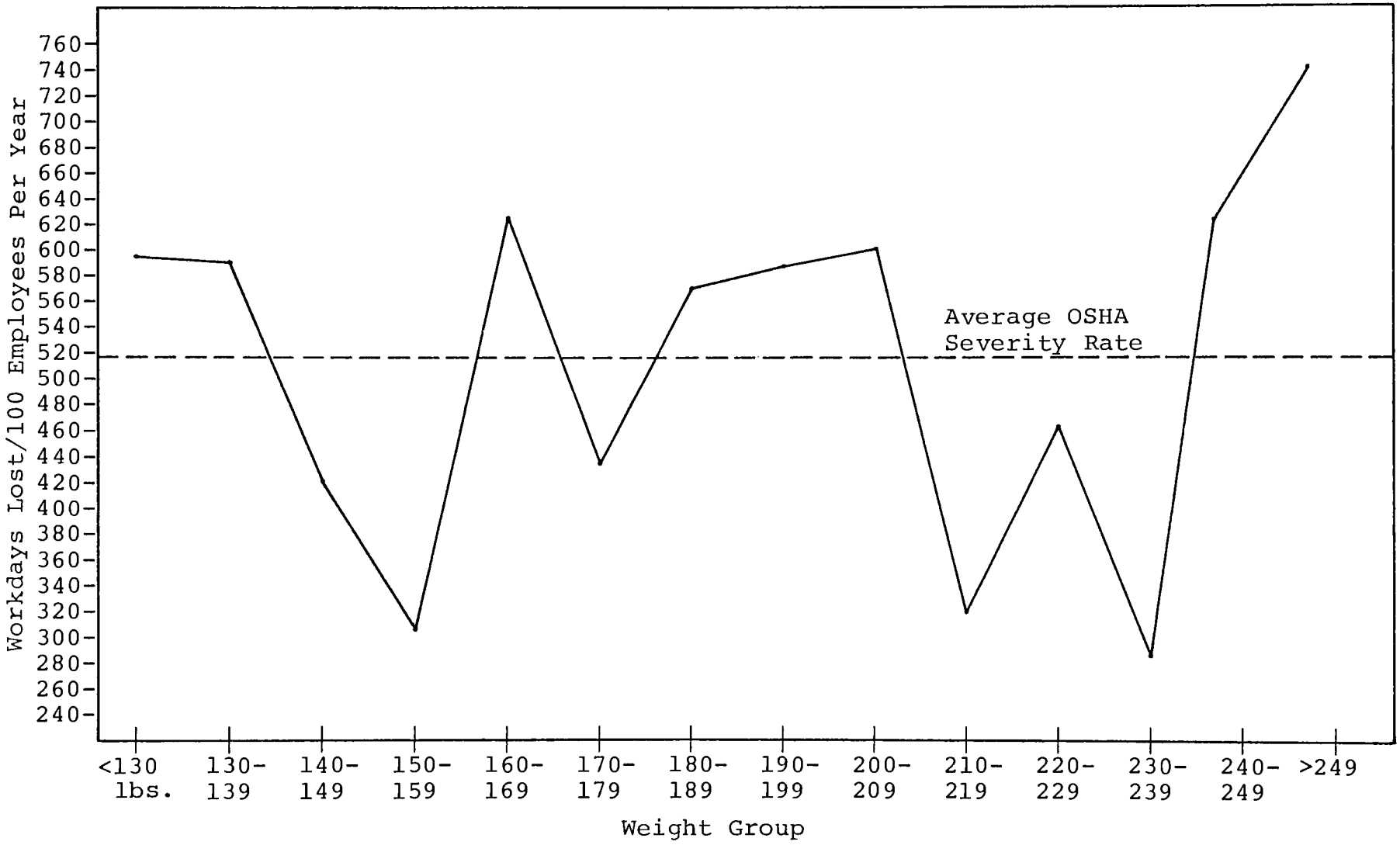

FIGURE 1-15

DIRECT COST PER MAN-YEAR
BY WEIGHT GROUP
COLLECTION DIVISION

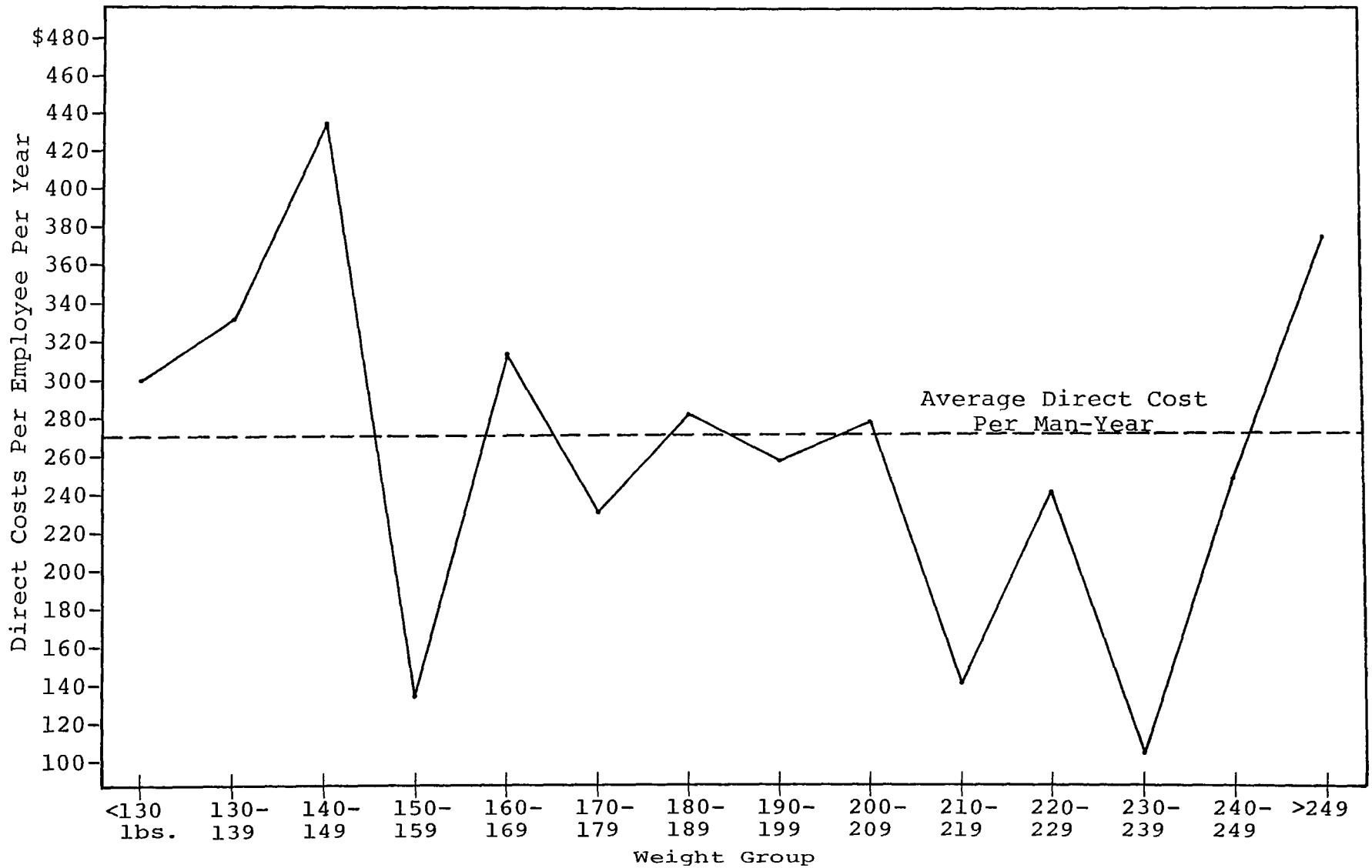

FIGURE 1-16

DISTRIBUTION OF THE EMPLOYEES' WEIGHTS

Weight Group	% of Man-Hours of Exposure
<130 lbs.	1%
130-139 lbs.	4%
140-149 lbs.	8%
150-159 lbs.	12%
160-169 lbs.	15%
170-179 lbs.	14%
180-189 lbs.	14%
190-199 lbs.	10%
200-209 lbs.	7%
210-219 lbs.	5%
220-229 lbs.	4%
230-239 lbs.	2%
240-249 lbs.	2%
>249 lbs.	2%

FIGURES 1-13 through 1-15 show the injury rates patterns by the various weight groups which were in increments of 10 pounds. FIGURE 1-13 shows higher incidence rates for the lighter employees and lower incidence rates for the heavier employees. FIGURE 1-14 and 1-15 show three consistently low points for severity and direct cost per man-year rates at 150-159, 210-219, and 230-239 lbs. The peaks in injury rates, however, varied between the two graphs.

SECTION II

SECOND QUARTER IRIS USER

INDUSTRY-WIDE DATA

The accidents received by IRIS from 42 users are covered in this section. FIGURE 2-1 gives operational background data on the IRIS users.

FREQUENCY, SEVERITY AND COSTS RATES

FIGURES 2-2 through 2-5 recap the frequency, severity and costs of injuries for this quarter:

- FIGURE 2-2: Summary of Injuries by Frequency, Severity and Costs. Compares the solid waste management industry with the national average for all industries.

- FIGURE 2-3: Comparison of Injury Rates and OSHA Days Lost for All Users. Compares the rates and days lost for the first two quarters of 1976, for each user, in user number order.

- FIGURE 2-4: Comparison of Direct Costs by Reporting Period for All Users. Compares the total costs and cost rates for the first two quarters of 1976, for each user, in user number order.

- FIGURE 2-5: Summary of Accident Factors for Selected Accident Characteristics with Highest Percent of OSHA Recordable Injuries, OSHA Days Lost and Direct Costs.

A few definitions of the terms used in the following FIGURES are:

- OSHA Recordable Injury. Defined by OSHA as a non-first aid injury.

- OSHA Incidence Rate. It is a measure of the frequency of injuries. The OSHA incidence rate is the number of OSHA recordable injuries per 200,000 hours of exposure. The base figure of "200,000 hours" is the standard figure used in OSHA statistics. It is roughly equivalent to 100 full-time employees working a year or 100 man-years (i.e., 100 employees working 40 hours per week for 50 weeks per year).

  OSHA incidence rates can be thought of as being roughly equivalent to the number of injuries that will occur to 100 employees during a year. Therefore, an OSHA incidence rate of 37 means that the organization is having 37 injuries per year for each 100 employees or that, on the average, 1 out of every 3 employees are being injured. The national average OSHA incidence rate for all industries has been around 10 for the last several years.

- Severity Rate. The severity rate is similar to the OSHA incidence rate, except that it reflects the number of OSHA days lost (i.e., workdays lost and light duty days), instead of the number of injuries, per 100 man-years worked. For example, a severity rate of 500 would mean roughly that an organization is losing 500 workdays for every 100 employees per year, or that on the average each employee is losing 5 days a year for on-the-job injuries.

- Direct Costs. Direct costs are normally those for which money was actually expended and include worker's compensation, medical expenses, and wage continuation benefits (e.g., injury leave). There are many indirect costs such as down time, replacement time, lost time by witnesses and supervisors, etc., which are not included in these figures. Indirect costs are estimated to be 5 times the direct costs in cities according to the National Safety Council.

- Average Direct Costs per OSHA Recordable Injury. An average direct cost per OSHA recordable injury of $500 means that on the average each OSHA recordable injury (i.e., a non-first aid case) is costing the organization $500!

- Direct Cost per Man-Year. It shows the cost per 2,000 hours or the average cost per year per employee. A direct cost per man-year of $200 would mean that on the average an organization's injuries are costing $200 per employee per year.

In reviewing these FIGURES, the data for the AVERAGE (shown on the FIGURES as AVG) is the most important because it summarizes the results for all users combined. After examining the AVERAGES, it is important to examine how great the range of rates between users is. Wide ranges are important because they show that it is possible to achieve lower rates of injury under given operating systems and safety programs.

FIGURE 2-1

DESCRIPTION OF USERS BY OPERATIONAL CHARACTERISTICS

User Number	M=Municipal P=Private	Geograph. Area	No. of Employees	Point of Collection: M=Mechanical A=Alley BY=Backyard w/o intermed. can BYT=Backyard-Tub BYC=Backyard-Cart CS=Curbside	Type of Shift	Type of Service Provided			
						Coll. Crew Size(s)			Disposal
						Resid.	Comm.	Resid. & Comm.	L=Landfill I=Incinerator T=Trans. Stn.
101	M	South	325	CS/A	T/F	4	4		L
109	M	Midwest	500	BY/BYC	F	4,3			
111	M	West	280	CS	T	2			L
125	M	South	650	CS	T		1	3	L,I
136	M	South	140	M/A	F	3,1	1		L
140	M	South	844	CS	T	3			
146	M	South	295	CS/A	T	1,2,3	1,2		L,T
148	M	Northeast	267	CS	T			4	
161	M	Midwest	125	CS/A	T	3,1			L
171	M	Midwest	370	A	T/F	3			
172	M	West	700	M/CS/A	T/F	1,2,3			L

FIGURE 2-1 (Continued)

OPERATIONAL CHARACTERISTICS CONTINUED

User Number	M=Municipal P=Private	Geograph. Area	No. of Employees	Point of Collection: M=Mechanical A=Alley BY=Backyard w/o intermed. can BYT=Backyard-Tub BYC=Backyard-Cart CS=Curbside	Type of Shift	Type of Service Provided			
						Coll. Crew Size(s)			Disposal
						Resid.	Comm.	Resid. & Comm.	L=Landfill I=Incinerator T=Trans. Stn.
181	M	Midwest	278	BY	T	4			L
186	M	South	297	CS	T	3	3		L
191	M	South	177	CS/A	T/F	3	1		L
204	M	West	52	CS/A/M	F	1,3	1,3		L
207	M	West	205	BYC	T	3	2		
210	M	West	15	CS	T			1,2	
211	M	West	40	CS/A	T	2	2		L
212	M	West	130	CS/A	F			2	
215	M	South	60	CS/BY/BYT	T/F	3	1		
217	M	South	820	CS/A/BY	F	1,2,3			L,T
235	M	South	125	BYT/A/CS	T	3	3		L
236	M	South	103	CS	T/F	3	1		L

FIGURE 2-1 (Continued)

OPERATIONAL CHARACTERISTICS CONTINUED

User Number	M=Municipal P=Private	Geograph. Area	No. of Employees	Point of Collection: M=Mechanical A=Alley BY=Backyard w/o intermed. can BYT=Backyard-Tub BYC=Backyard-Cart CS=Curbside	Type of Shift	Type of Service Provided			
						Coll. Crew Size(s)			Disposal
						Resid.	Comm.	Resid. & Comm.	L=Landfill I=Incinerator T=Trans. Stn.
237	M	Midwest	90	A/BYC	T/F			3	
242	M	South	101	CS/BY/BYT/A	T/F	3	3		L,T
244	M	West	30	BYT/BYC	T	2	1,2		
260	M	West	168	CS/BYT/A/M	T	1,2	2,3		L
261	M	Midwest	8	CS/A	T	3			L
265	M	West	200	CS/BYT/BYC	T	1,2	2		L,T
272	M	Northeast	127	CS	T	3	3		L,I
275	M	Northeast	40	CS	T	3			
283	M	South	72	CS/A	T/F	2	3,1		L,T
285	M	Midwest	79	A/BYT/BYC	T	3			
286	M	West	8		F				L,T
292	M	Northwest	225	CS/A/BYT/BYC	F	1,3	2		L

FIGURE 2-1 (Continued)

OPERATIONAL CHARACTERISTICS CONTINUED

User Number	M=Municipal P=Private	Geograph. Area	No. of Employees	Point of Collection: M=Mechanical A=Alley BY=Backyard w/o intermed. can BYT=Backyard-Tub BYC=Backyard-Cart CS=Curbside	Type of Shift	Type of Service Provided			
						Coll. Crew Size(s)			Disposal
						Resid.	Comm.	Resid. & Comm.	L=Landfill I=Incinerator T=Trans. Stn.
295	M	South	179	CS/BY	T	4	2		L
296	M	West	43	CS/A/BY	F	1	2,1		
316	M	Northeast	475	CS/A/BYT	F	2,3	2,3		
324	P	Midwest	17	CS/A/BYT/BYC	T			1,2	
325	M	Northwest	45	CS/A	F	2,1	1,2,3		L
329	P	West	20	CS	T	3	2,1		
330	M	South	60	A/CS	F	3	3	3	L

FIGURE 2-2

SUMMARY OF INJURIES BY FREQUENCY, SEVERITY AND COSTS

FREQUENCY

- There were 1,189 cases reported by 36 of the IRIS users on-line: 279 first aid cases, 355 non-fatal cases without lost workdays, 550 lost workday cases, 4 permanent disability cases, and 1 fatality. Total man-hours for this quarter were 4,133,800.

- The AVERAGE OSHA incidence rate was 44 for this quarter. This means that two out of every five solid waste industry employees will experience a non-first aid injury a year. The national rate for all industries was 10.4. Therefore, the solid waste industry is experiencing almost four times as many injuries as the average industry.

- IRIS users ranged in frequency rates from User No. 204 which was experiencing 1.4 injuries per employee per year, to User No. 292 which was experiencing 11 injuries per 100 employees per year.

SEVERITY

(Days lost given are not final. These figures reflect what was received from IRIS users by December 31, 1976 and may be gross underestimates. For example, in the months since the publication of the first quarter Accident Trends for 1976, the OSHA severity rate has increased from 269 to 410, and not all cases are final yet.)

- So far, 555 cases this quarter incurred 8,150 workdays lost and light duty days.

- 47% of the total cases resulted in workdays lost and/or light duty days. The national average for all industries is 33%. This means that the solid waste industry has almost 1.5 times as many lost workday injuries as the average industry.

- The AVERAGE OSHA severity rate was 394. This means that on the average, each employee is losing 3.9 days per year for injuries. One user's rate was as high as 29 days lost per year per employee; several are losing zero days a year per employee.

- On the AVERAGE, each lost workday case resulted in 14.71 workdays lost so far.

DIRECT COSTS

(Costs given are not final. These figures reflect what was received from IRIS users by December 31, 1976, and may be gross underestimates. For example, first quarter of 1976's AVERAGE cost per OSHA recordable injury has gone up from $296 to $537.)

- Total direct costs so far for injuries that occurred during the second quarter was $466,603.

- The AVERAGE cost per OSHA recordable injury was $512.

- The AVERAGE cost per man-year was $226. This means that the average solid waste injury (non-first aid) cost $226 per full-time employee per year so far.

STARTING: JANUARY, 1976

FIGURE 2-3

COMPARISON OF INJURY RATES AND OSHA DAYS LOST FOR ALL USERS

USER	OSHA INCIDENCE RATE QTR 1	QTR 2	QTR 3	QTR 4	SEVERITY RATE QTR 1	QTR 2	QTR 3	QTR 4	AVERAGE OSHA DAYS LOST QTR 1	QTR 2	QTR 3	QTR 4
101	12	33			47	391			6.50	27.00		
109	36	49			195	176			8.03	8.15		
111	65	74			1048	1293			23.39	24.79		
125	31	35			875	378			35.54	13.19		
136	0	0			0	0			0.00	0.00		
140	31	55			347	680			15.37	16.56		
146	26	21			536	137			66.50	20.60		
148		23				151				12.86		
161	13	41			0	33			0.00	1.60		
171	44	62			209	229			9.58	5.96		
172	50	56			476	1116			14.56	27.51		
181	44	50			369	148			11.48	4.26		
186	13	24			69	279			12.25	22.00		
191	57	46			189	150			4.00	5.11		
204	79	136			342	84			13.00	8.00		
207	78	96			576	251			10.30	5.35		
210	104	0			467	0			9.00	0.00		
211	9	68			539	281			62.00	4.71		
212	79	44			759	488			9.65	11.00		
215	0	0			0	0			0.00	0.00		
217		44				193				11.22		
235	7	55			11	0			3.00	0.00		
236	88	104			1478	665			18.53	8.86		
237	15	33			35	152			3.50	6.40		
242	4	0			100	0			25.00	0.00		
244	93	57			170	199			2.75	3.50		
260	68	54			759	519			19.42	16.20		
261	48	0			145	0			3.00	0.00		
265	34	46			245	300			8.64	7.80		
272	11	15			243	11			32.00	1.50		
275		60				636				10.67		
283	12	50			0	134			0.00	8.00		
285	7	0			13	0						

USER	OSHA INCIDENCE RATE QTR 1	QTR 2	QTR 3	QTR 4	SEVERITY RATE QTR 1	QTR 2	QTR 3	QTR 4	AVERAGE OSHA DAYS LOST QTR 1	QTR 2	QTR 3	QTR 4
286	0	0			0	0			0.00	0.00		
292	3	11			284	20			86.00	4.33		
295	17	20			64	20			4.75	2.00		
296	19	76			476	2943			25.00	51.50		
316		53				608				17.05		
324		79				0				0.00		
325		42				134				4.75		
329		37				37				2.00		
330		25				82				5.00		
AVG.	34	44			410	394			17.45	14.68		

FIGURE 2-4

COMPARISON OF DIRECT COSTS BY REPORTING PERIOD FOR ALL USERS

Starting: January, 1976

USER	TOTAL INJURY COSTS QTR 1	QTR 2	QTR 3	QTR 4	AVG. COST PER OSHA REC. INJ. QTR 1	QTR 2	QTR 3	QTR 4	AVERAGE COST PER MAN YEAR QTR 1	QTR 2	QTR 3	QTR 4
101	4,210	29,631			386	986			51	330		
109	13,513	12,994			312	213			112	104		
111	57,185	42,448			1,190	771			776	567		
125	54,614	27,060			895	375			280	131		
136	0	0			0	0			0	0		
140	39,842	69,843			711	688			219	382		
146	14,050	5,442			739	340			188	72		
148		3,577				255				60		
161	135	815			18	80			5	33		
171	3,582	6,376			148	163			65	102		
172	27,167	58,431			393	749			197	416		
181	11,510	5,081			391	153			176	76		
186	1,295	8,021			143	471			18	113		
191	1,475	1,685			86	120			49	55		
204	2,481	517			275	39			217	54		
207	4,523	9,636			141	235			110	226		
210	1,445	0			361	0			374	0		
211	794	1,987			758	248			68	168		
212	14,297	7,138			621	549			488	243		
215	0	0			0	0			0	0		
217		87,684				956				419		
235	251	725			125	48			9	26		
236	12,768	9,550			608	329			536	341		
237	604	1,813			201	259			30	86		
242	6,877	0			6,877	0			274	0		
244	706	904			117	226			109	128		
260	2,317	5,620			110	330			75	180		
261	159	0			159	0			76	0		
265	2,820	8,216			214	455			72	210		
272	1,861	109			620	27			70	4		
275		1,437				239				142		
283	119	1,346			59	147			7	75		
285	61	0			61	0			4	0		

USER	TOTAL INJURY COSTS QTR 1	QTR 2	QTR 3	QTR 4	AVG. COST PER OSHA REC. INJ. QTR 1	QTR 2	QTR 3	QTR 4	AVERAGE COST PER MAN YEAR QTR 1	QTR 2	QTR 3	QTR 4
286	0	0			0	0			0	0		
292	7,327	894			3,663	127			121	13		
295	911	578			177	96			30	19		
296	1,982	16,786			991	2,098			188	1,598		
316		37,857				630				337		
324		92				30				24		
325		2,159				359				151		
329		153				66				28		
330		1,053				351				86		
AVG.	290,881	467,658			537	512			183	226		

FIGURE 2-5

SUMMARY OF ACCIDENT FACTORS FOR SELECTED ACCIDENT CHARACTERISTICS WITH HIGHEST PERCENT OF OSHA RECORDABLE INJURIES OSHA DAYS LOST AND DIRECT COSTS

Type of Characteristic	Factors With The:		
	Highest % of OSHA Recordable Injuries	Highest % of OSHA Days Lost	Highest % of Direct Costs
Activity	Lifting or dumping container - 40% Getting off equipment - 8% Riding on equipment - 7%	Lifting or dumping container - 33% Riding on equipment - 10% Carrying container - 8%	Lifting or dumping container - 29% Dislodging waste from container - 12% Riding on equipment - 7%
Accident Type	Overexertion involving container - 20% Slip on same level - 6% Fall to a different level - 6%	Overexertion involving container - 26% Fall to a different level - 9% Vehicle movement involved accident - 8%	Overexertion involving container - 23% Caught between objects - 21% Fall to a different level - 7%
Accident Site	On collection route at back of truck - 36% On collection route at curb - 18% In customer's yard - 10%	On collection route at back of truck - 42% On collection route at curb - 14% On collection route on step of vehicle - 11%	On collection route at back of truck - 36% On collection route at curb - 13% In customer's yard - 9%
Nature of Injury	Sprain or strain - 43% Cut or puncture - 20% Bruise - 19%	Sprain or strain - 64% Fracture - 12% Bruise - 10%	Sprain or strain - 54% Multiple injuries - 13% Fracture - 13%
Part of Body	Back - 22% Eyes - 8% Leg - 8%	Back - 48% Knee - 8% Multiple body parts - 5%	Back - 41% Multiple body parts - 16% Foot - 7%

Accident Trends
3rd Quarter 1976

IRIS

EXHIBIT 4

ACCIDENT TRENDS

IN THE SOLID WASTE MANAGEMENT INDUSTRY

EQUIPMENT RELATED ACCIDENTS

QUARTER: JULY 1 TO SEPTEMBER 30, 1976

DEVELOPED BY SAFETY SCIENCES, DIVISION OF WSA, INC.
FOR THE U.S. ENVIRONMENTAL PROTECTION AGENCY
OFFICE OF SOLID WASTE MANAGEMENT PROGRAMS
UNDER CONTRACT NO. 68-03-0231

safety sciences Division of WSA Inc., 11772 Sorrento Valley Road
San Diego, California 92121 (714) 755-9359 & 452-1010

Accident Trends in the Solid Waste Management Industry is developed quarterly using data from IRIS (the Injury Reporting and Information System for Solid Waste Management). Accident Trends is designed to summarize and discuss the data from all IRIS users and to provide data and conclusions which affect the industry as a whole. A companion volume, the QSMR (Quarterly Safety Management Report), is developed individually for each IRIS user who reported injuries during the quarter. Each QSMR concentrates only on the injuries of the individual IRIS user for which it is prepared.

IRIS is currently made up of 53 users. All possible care is taken to insure data quality. The nature of the data and the reports, however; precludes complete accuracy. Not all cases are closed by the end of the quarter. These accidents continue to be monitored. Occasionally, full lost time and cost data is not available. Consequently, the totals for these categories may be underestimates. A concerted effort is made to correct the lost time and cost figures and improve IRIS collection methods. The recommendations and countermeasures presented are suggestions that must be evaluated in terms of individual user's needs.

ACCIDENT TRENDS

IN THE SOLID WASTE MANAGEMENT INDUSTRY

QUARTER: JULY 1ST. TO SEPTEMBER 30, 1976

TABLE OF CONTENTS

		Page
INTRODUCTION		
I.	Section I - DISCUSSION OF EQUIPMENT RELATED ACCIDENTS AND PREVENTION METHODS	
	Lifting to Dump Container	2
	Dumping Container	5
	Dismounting	7
	Standing or Walking	11
	Lifting to Dump Waste	13
	Riding	14
	Mounting	19
	Driving	21
	Operating Controls	22
	Other Equipment Related Activities	26
II.	Section II - THIRD QUARTER IRIS USER INDUSTRY-WIDE DATA	68
	Part I - Frequency, Severity and Costs Rates	68
	Part II - Characteristics of Accidents	85

LIST OF FIGURES

		Page
FIGURE 1-1:	Use of Rubber "Mud Guard" Flaps as Protection Against Objects Ejected from the Hopper	12
FIGURE 1-2:	Detailed Description of Lifting-to-Dump Container Accidents	30
FIGURE 1-3:	Detailed Description of Dumping Container Accidents	35
FIGURE 1-4:	Detailed Description of Dismounting Accidents	39
FIGURE 1-5:	Detailed Description of Standing or Walking Accidents	42
FIGURE 1-6:	Detailed Description of Lifting-to-Dump Waste Accidents	45
FIGURE 1-7:	Detailed Description of Riding Accidents	48
FIGURE 1-8:	Detailed Description of Mounting Accidents	50
FIGURE 1-9:	Detailed Description of Driving Accidents	52
FIGURE 1-10:	Detailed Description of Operating Controls Accidents	53
FIGURE 1-11:	Detailed Description of Repairing Equipment Accidents	54
FIGURE 1-12:	Detailed Description of Checking Equipment Accidents	55
FIGURE 1-13:	Detailed Description of Opening Equipment Part Accidents	56
FIGURE 1-14:	Detailed Description of Emptying Equipment Accidents	57
FIGURE 1-15:	Detailed Description of Washing Vehicle Accidents	58

		Page
FIGURE 1-16:	Detailed Description of Closing Equipment Part Accidents	59
FIGURE 1-17:	Detailed Description of Hooking or Unhooking Equipment Accidents	60
FIGURE 1-18:	Equipment Related Accidents - Preliminary Task/Hazard Analysis	61
FIGURE 2-1:	Description of Users by Operational Characteristics	71
FIGURE 2-2:	Summary of Injuries by Frequency, Severity, and Costs	76
FIGURE 2-3:	Number of Injuries Reported by Type of Severity - Comparison of 'IRIS' Users	78
FIGURE 2-4:	Comparison of Injury Rates and OSHA Days Lost for all Users	80
FIGURE 2-5:	Comparison of Direct Costs by Reporting Period for All Users	82
FIGURE 2-6:	Summary of Accident Factors for Selected Accident Characteristics with Highest Percent of OSHA Recordable Injuries, Workdays Lost and Direct Costs	84
FIGURES 2-7A TO 2-7C:	Activities Ranked from Highest to Lowest Percent of OSHA Recordable Injuries, Workdays Lost and Direct Costs	86
FIGURES 2-8A TO 2-8C:	Accident Types Ranked from Highest to Lowest Percent of OSHA Recordable Injuries, Workdays Lost and Direct Costs	92
FIGURES 2-9A TO 2-9C:	Accident Sites Ranked from Highest to Lowest Percent of OSHA Recordable Injuries, Workdays Lost and Direct Costs	98

Page

FIGURES 2-10A TO 2-10C: Injury Types Ranked from Highest to Lowest Percent of OSHA Recordable Injuries, Workdays Lost and Direct Costs 104

FIGURE 2-11: Parts of Body Ranked from Highest to Lowest Percent of OSHA Recordable Injuries, Workdays Lost and Direct Costs 107

INTRODUCTION

This is the Accident Trends report for the third quarter of 1976 (July 1 to September 30). Before reading the results, the following points should be noted:

- The special feature selected for third quarter's Accident Trends report is equipment related accidents. Although the actual FIGURES reflect only third quarter's accidents, the narrative discusses accidents from IRIS users since the instigation of IRIS in December, 1975 through September, 1976.

- IRIS users are only identified by number. A table giving background information on the operational characteristics of each user is shown in FIGURE 2-1.

- 44 out of 52 IRIS users on-line reported a total of 1,083 injuries. Not all users started reporting injuries at the same time. Many users began reporting injuries during previous quarters, and others began on August 1st or September 1st. The injury rates shown are comparable, however, because the different starting dates are reflected in the hours of exposure. Total hours of exposure for the third quarter is 3,795,819.

- The phrase "AVERAGE" refers to the injury rates or numbers for all IRIS users combined.

- The FIGURES include the injury and time lost and costs data that were provided to IRIS by December 31, 1976, the "closing date" for receiving data for the third quarter. Some of the cases are "open," for which data is not final. All of the time lost and costs data should, therefore, be interpreted as low in regard to the actual data. Open cases are followed until the data is final.

This Accident Trends report is divided into two sections. SECTION I provides a discussion of equipment related accidents and prevention methods. It includes a Preliminary Task/Hazards Analysis for the solid waste management industry. SECTION II is a summary of the data received for all IRIS users during the quarter.

Accompanying the Accident Trends report is a separate handouts of Proposed Recommended Safe Work Rules. It was compiled from the safety rules that were requested from all IRIS users.

SECTION I

DISCUSSION OF EQUIPMENT RELATED ACCIDENTS AND PREVENTION METHODS

Equipment related accidents were chosen as the special feature topic for third quarter's Accident Trends Report because of the large toll they take on frequency of injuries, days lost and direct costs of solid waste industry injuries. During the third quarter of 1976, accidents that were directly related to interaction between the injured employee and the sanitation vehicle (e.g., driving, mounting, dismounting, riding accidents) accounted for a full 30% of the OSHA recordable injuries, days lost and direct costs. To include other accidents that were indirectly related to sanitation vehicles (e.g., overexertion due to dumping in the hopper or struck by object that fell out of the container or vehicle while dumping in the hopper) as equipment related accidents increases the overall percentage by as much as 15%.

The following is a discussion of the various equipment related accidents that occurred throughout the year. It is separated into sections by the tasks the injured employees were performing. The hazards related to each task are discussed in detail, and accident prevention methods (i.e., countermeasures) are offered. Many of the countermeasures given were suggested by IRIS users. The hazards and countermeasures are condensed for easy reference in a Preliminary Task/Hazards Analysis shown in FIGURE 1-18.

FIGURES 1-1 through 1-17 included at the end of Section I provide detailed descriptions of the equipment related accidents occurring this quarter. Each FIGURE centers on a specific task. The descriptions are given in profile form (i.e., sentence) and includes the activity, accident type, injury type and part of body. The FIGURES also provide the total number of injuries, the days lost and the direct costs that correspond to each profile.

The FIGURES and the discussion are ordered from the highest to the lowest percent of OSHA recordable injuries that occurred for a specific task (see FIGURE 2-7A).

Lifting to Dump Container (FIGURE 1-1)

The term "lifting-to-dump" describes the continuous motion that begins with lifting the container and ends with the container in a tilted position for dumping into the hopper or an intermediate container. Many users refer to this action as "loading."

As can be seen by FIGURE 1-1, almost all lifting-to-dump container accidents occur when the employee was in the process of trying to dump into the hopper. This activity often is the second or third major cause of accidents occurring in the solid waste industry. It also is frequently ranked high in days lost and costs. During the third quarter, an average lifting-to-dump container injury resulted in 11 days lost and $270 in direct costs. However, since these cases tend to remain open due to the large number of strains incurred, these figures are low. For instance, an average lifting-to-dump container injury that occurred during second quarter resulted in 15 days lost and $393, since revised days lost and cost figures were supplied for the previous quarters' injuries.

Since December 1975, 165 cases of lifting-to-dump container injuries were reported. This was 5.6% of the total number of injuries reported. During the third quarter, this task accounted for 11.8% of the injuries reported.

The major hazard in performing this task is losing control of the container. The most common injuries are strains to the back or shoulder. Fifty percent of the lifting-to-dump accidents were overexertions. Half of these occurred as the employee was <u>twisting</u> or <u>turning</u> while lifting to dump. Thirty-three overexertions occurred as the employees were <u>throwing</u> containers into the hopper.

Many users have found the need to train employees on proper lifting techniques. Throwing is not allowed. The users recommend that employees have feet apart, and one foot forward when lifting. Employees should not jerk or twist when lifting the container and should keep their backs straight and knees bent. The container should be kept close to the body. Employees should lift with the legs rather than the back.

Another hazard produced by turning while lifting to dump is striking against the vehicle. Thirteen injuries of this nature occurred. This may in part be due to haste in which the employee is not properly judging the location of the truck. Employees should take a step when turning to dump rather than twisting the body around. Keeping the container close to the body should also reduce elbows and hands striking against the truck.

Forty-two overexertions involved lifting overweight containers. Several users have safety rules for "testing" the weight of the container. They recommend rocking the container with the knee to approximate the weight. Overweight containers are not easily recognizable because many times there may be wet

yard clippings or rocks hidden in the borroms of the containers. If a container is found to be overweight, employees should be instructed to GET HELP. However, employees also need to be trained in lifting in unison, as injuries frequently occur from noncoordinated lifting efforts. One employee, when lifting an overweight container with a coworker, struck his wrist against the hopper, fracturing it.

To aid in reducing the number of overweight containers, a city can be encouraged to pass container regulations on the size, weight, condition and location of the containers. Other regulations can encompass unacceptable waste items that must be handled separately and requiring lids for all containers. If lids are required on containers at all times, it will prevent water-filled containers in rainy weather. If a city adopts container regulations, they must be enforced. Containers that do not meet city regulations should be tagged and left. One IRIS user found that public education programs aided in citizen acceptance of new container regulations.

Employees must have a firm grip on the container while lifting to dump. Six injuries occurred when the container slipped from the employee's grasp and dropped on his foot or caught his fingers against the edge of the hopper. Employees should step out of the way of falling containers. Safety shoes with reinforced protection for toes are recommended since these accidents could have resulted in a serious injury to the employee's toes.

Gloves are recommended for protection against ragged edges of cans and glass protruding from plastic bags. When lifting-to-dump plastic bags, do not put hand beneath bag and do not swing bag into hopper, as protruding glass will cut the leg as it brushes by. One user utilizes chaps, another aprons, to effectively reduce cuts to the legs. Employees should be trained to place the bags in the hopper rather than throwing them into the hopper as they pick them up at the curb.

Another type of injury that occurred when lifting-to-dump containers was when the employees lost their balance and strained themselves or fell. Two of the slips were due to icy surfaces, four due to wet surfaces. Again, the proper lifting technique is recommended. A slow, steady lift minimizes imbalance.

Employees also should watch their step when at the back of the vehicle. Six injuries were due to employees stepping on rocks, boards with nails, nails and brush. Employees should be trained to pick up any waste that has dropped from the container or the vehicle immediately, in order to prevent himself or a coworker from being injured from it.

Eye protection is recommended any time employees are working in the hopper vicinity. One employee had a piece of pipe strike his eye when it was ejected from the hopper; he could easily have lost his sight. Not only does the hopper eject materials (seven injuries) but dust is generated in the hopper as containers are being dumped (five objects in eye injuries). Employees should be trained to keep their heads turned to the side when lifting to dump. Do not dump if the hopper is operating. Employees should stand to the side of the hopper rather than immediately behind, to avoid ejected waste when the hopper is packing. Plastic bags tend to "pop" when packed, ejecting dust and other materials.

Dumping Container (FIGURE 1-2)

Dumping container accidents had the third highest percentage (11%) of OSHA recordable injuries for the third quarter (see FIGURE 2-7A). The average dumping injury during the third quarter resulted in 9 days lost and $242 in direct costs. Since IRIS began, 250 cases of dumping injuries occurred, or 8.4% of all cases reported. Almost all the dumping container accidents were while dumping into the hopper rather than into an intermediate container.

The major hazard in dumping containers is also losing control of the container. The major accident type was overexertion (22%). Employees should be taught to:

1. not shake the container while dumping; roll the container back and forth instead,

2. rest the container on the hopper sill while dumping so that the weight of the container is supported,

3. keep the container close to the body to prevent awkward body positions that put undue stress on the back,

4. keep a firm grip on the container at all times, and

5. GET HELP if the container is overweight.

Fifty percent of the overexertions while dumping containers were due to overweight containers. Coordination is essential to two-man lifts, however. Again, container regulations against overweight containers are highly recommended. In cases where employees dump their intermediate containers into the hopper, two-man lifts are recommended or a mechanical lifting device adapted to the hoppers.

Ten percent of the dumping container accidents occurred when the container slipped from the employee's grasp. In three cases the handles on the containers broke. Employees should be taught to not try to catch a falling container and to keep hands and feet clear of the container once they have lost control of the container. Four back strains occurred when employees were trying to catch their falling containers. One employee was actually trying to hold up a bulk container when the pin came out of the chain! Ten employees had their fingers pinched between the container and the edge of the hopper when their containers slipped.

Eight percent of the dumping container accidents were fingers and hands caught between the container and the edge of the hopper. When employees initially lean the containers on the hopper sill, prior to rolling the containers to dump, they should be careful of their hand position; it should not be underneath the top of the container as it definitely will be caught, nor should it be to the side since it will be pinched when the container is rolled.

Employees should be warned against haste. Two injuries occurred when the container "bounced back" from the hopper and struck against the employee. This implies that the containers had been thrown.

There should not be two employees dumping into the hopper at the same time. Four percent of the dumping container accidents were where the employee was struck by or struck against a coworker's container. In one case, the injured employee required stitches to his head. It also is safer to stay clear of the coworker when he is dumping. One injury was due to an employee standing directly behind a coworker who was dumping his cart. The cart slipped out of the coworker's hands and struck the employee's arm.

Again, eye protection is essential for anyone who works at the back of the vehicle. Five percent of the dumping container injuries were due to being injured by objects ejected from the hopper. Several cases involved large objects that were ejected such as bottles and boards. Glass narrowly missed two employees' eyes. Employees should not be allowed to dump while the hopper is operating. The dangers of being near an operating packer cannot be stressed enough. In addition, employees should be trained to spend as little time in front of the hopper as possible. Fourteen percent of the injuries were due to receiving objects in the eye while dumping; the hopper was not operating at the time.

Employees need to beware of objects protruding from the hopper. Three employees cut their arm on broken bottles that were protruding from the vehicle. One employee struck against a branch.

If employees use the proper dumping technique of resting the container on the hopper sill and rolling the container back and forth, several other injuries could have been prevented. Fourteen injuries occurred when the employees were struck by objects that fell out of the container or the vehicle. Employees should not hold the containers high, as this causes the garbage to "spill" out. It is also an awkward body position.

Employeer were also bumping into the truck as they were dumping their containers. Eight percent of the dumping container accidents were of this nature. Nine injuries were from the employees striking their elbows on the edge of the hopper. This could be prevented by keeping the container close to the body and not shaking the container while dumping. Six employees were handling overweight containers at the time and may have found them awkward to dump. They should have requested help.

Another rule to remember while dumping is to keep the feet firmly planted on the ground and parted for balance. Thirteen injuries involved the employees losing their footing as they were dumping, three involved ice on the ground, two wet surfaces and one oil on the ground.

Dismounting (FIGURE 1-4)

Dismounting from the vehicle resulted in 8% of the OSHA recordable injuries for the third quarter. This was the fourth highest percentage of OSHA recordable injuries. Approximately half of the injuries occurred while the employee was dismounting from the step and half while dismounting from the cab. The average dismounting accident resulted in seven days lost and $201 during the third quarter.

Dismounting from step. A total of 108 accidents where the employees were hurt when stepping off the rear or side steps of the vehicle have been reported since IRIS began.

The major hazard encountered when employees are dismounting from the step is lack of sure footage. Forty-five percent of the injuries were caused by unfavorable roadway conditions (e.g., objects on the ground, uneven surfaces, slippery surfaces).

When dismounting, employees should be trained to:

1. look where they are stepping,

2. dismount backwards rather than forwards,

3. maintain a firm grip on the handhold until both feet are securely placed on the ground,

4. place feet flatly on the surface.

On no account should they dismount while the vehicle is still in motion; they should wait until after the truck has completed its backward lurching motion in stopping.

Equipment design factors must also be considered in aiding the employee in mounting and dismounting. Are the handrails on the vehicles conveniently located and long enough to be held onto until the employee is firmly situated on the ground, or are they so high that they can only be held onto while the employee is riding on the step? Are the steps on the vehicles located at such a height that it causes an awkward mounting or dismounting stance?

The American National Standards Institute Z245.1-1975 standard entitled, "Safety Requirements for Refuse Collection," has standards relevant to step design. It stipulates:

7.3.7 Riding Steps and Grab Handles

7.3.7.1 The surface and edges of steps shall have a slip-resistant surface. They shall be self-cleaning or be protected against the accumulation of mud, snow, and ice.

7.3.7.2 Steps shall be designed to carry a uniformly distributed load of not less than 1000 pounds.

7.3.7.3 If steps are provided, they shall be mounted not more than 22 inches above the road surface.

7.3.7.4 Steps shall have a depth of at least 8 inches and shall provide a minimum of 220 square inches of riding surface area.

7.3.7.5 Grab handles shall be provided in conjunction with riding steps and be located so as to provide the employee with a safe and comfortable riding stance. Each grab handle shall be capable of withstanding a pull of at least 500 pounds.

Review your organization's step and grab handles' designs to see if they meet the above guidelines.

Employees were not looking at where they were stepping. In 33 cases, employees lost their balance when they stepped down onto bricks, rocks, potholes in the pavement, drainage holes, cracks in the sidewalk and edges of curbs. One employee stepped down on a container, fell and fractured his ankle. Seven other employees slipped when they stepped onto loose gravel, oil spots and icy and wet pavements. In seven other cases, employees punctured their feet when they stepped on date thorns, nails and boards with nails.

When employees are dismounting onto a known slippery surface, they should place their feet flat on the surface to decrease slippage. Safety shoes with high ankles are strongly recommended (many users require them) not only to give added support to the ankle when mounting and dismounting, but also to reduce puctures to the foot. Several users issue special high traction shoes designed for walking on the snow and ice and have found them useful in reducing their slips and falls. However, it must also be recognized that although slip resistant shoes may be useful in inclement weather conditions, they should not be used in good weather because of the opposite effect of knee injuries occurring from too much traction. Therefore, different safety shoes should be issued depending on seasonal weather changes.

Employees should not be allowed to get on or off the step while the truck is still in motion. Nor should they be allowed to jump on or off the step. One accident that could have resulted in a serious injury occurred when the truck driver drove off as the employee was dismounting, and the wheel of the truck ran over his foot. Fortunately, the accident only resulted in a bruised foot. Two employees fell when they got off the step before the truck stopped. In six cases, employees were jumping off the step when they sprained their ankles. Several users give reprimands or warnings for these types of accidents where the employees were in direct violation of safety rules. Repeated warnings would result in suspension. To make any safety rules meaningful, violations of the rules must be acted upon immediately.

Injuries can also occur from twisting or turning the body when dismounting. Two employees turned as they stepped down in order to pick up cans from the curb; one slipped and fell, the other strained his knee.

Slippery steps is another hazardous condition that is particularly prominent in wet and icy weather conditions. Several users have modified their steps to make them more slip resistant. Some users are utilizing abrasive adhesive material on steps and others use open-mesh steps that do not accumulate snow or water. An important point to recognize with the abrasive material is maintenance. The material wears down periodically and, therefore, should be checked and replaced on a regular basis.

Dismounting from cab. The accidents occurring are distinguished from dismounting from the step accidents by two new factors being introduced:

1. increased dismounting height, and

2. a movable vehicle part, the door.

Because of the increased difficulty in dismounting from the cab as opposed to dismounting from the step, the proper dismounting procedure is even more important. There is increased likelihood of being off balance as one "climbs" out of the cab instead of simply stepping down. Equipment design factors to be considered for this activity are also long, vertical grab handles and slip resistant steps.

Thirty employees slipped on the running board and fell while they were dismounting. They accounted for close to a third of the dismounting from cab injuries. In a majority of the cases, the accidents were caused by the employees dismounting forwards, rather than backwards. The advantages to dismounting backwards are that the person can look at where he is stepping as he is getting out of the cab, and he can use a stationary handrail for support rather than a door that might swing from his grasp. Again, maintaining a firm grip on the handhold at all times and stepping down firmly and steadily are important in maintaining balance. In addition, make sure that the cab door is opened completely before dismounting. Five employees had their hands caught by the closing door, and one was struck on the side by the door, while they were dismounting from the cab.

Eight injuries were due to stepping on objects on the ground, two were due to oily surfaces and five were due to stepping in holes in the pavement. Employees should watch for these hazardous surface conditions when they are dismounting.

Another three injuries occurred as the employees jumped out of the cab, and one employee's foot was run over by the still-moving vehicle. Employees should be instructed against haste. One user has a safety rule that makes the driver responsible for the safety of his passenger. The driver does not allow his rider to get out of the cab unless the vehicle is completely stopped. Accidents can be reduced by training the employees on each crew to work as a "team" in looking out for each other's safety.

Three other injuries were due to the employees' clothing being caught while they were getting out of the cab. Two employees caught their gloves in the door handle, and one employee was tripped up when his pant leg caught on something. Again, dismounting backwards might have prevented these accidents by the employees relying on the handrails for support rather than the door handles. Employees should not wear pants that are cuffed or excessively loose at the ankles, as they will catch easily on protruding objects.

Standing or Walking (FIGURE 1-5)

"Standing or walking" is an activity description that is used only if the employee is not doing anything else. For instance, if an employee is standing at the curb, waiting for the packing cycle to end before he lifts the container to dump it, his activity fits under this category. Had he been actually carrying the already dumped container back to the curb, his activity would be categorized instead as "carrying container."

Standing or walking accidents accounted for 7% of third quarter's OSHA recordable injuries, but the actual percentage of these accidents that were equipment related were under 2%.

The majority of the injuries were caused by being struck by waste ejected from the hopper. One user reduced this hazard by installing "mud flaps" (see FIGURE 1-1) over the hopper. When the hopper is packing, the rubber flaps contain the waste and prevent waste from flying out of the hopper or falling out. In the time since this countermeasure was discussed in first quarter's Accident Trends, several other users decided on modifying their equipment with mud flaps also.

Other safety countermeasures include:

1. eye protection at all times.

2. spend as little time in front of the hopper as possible, and

FIGURE 1-1

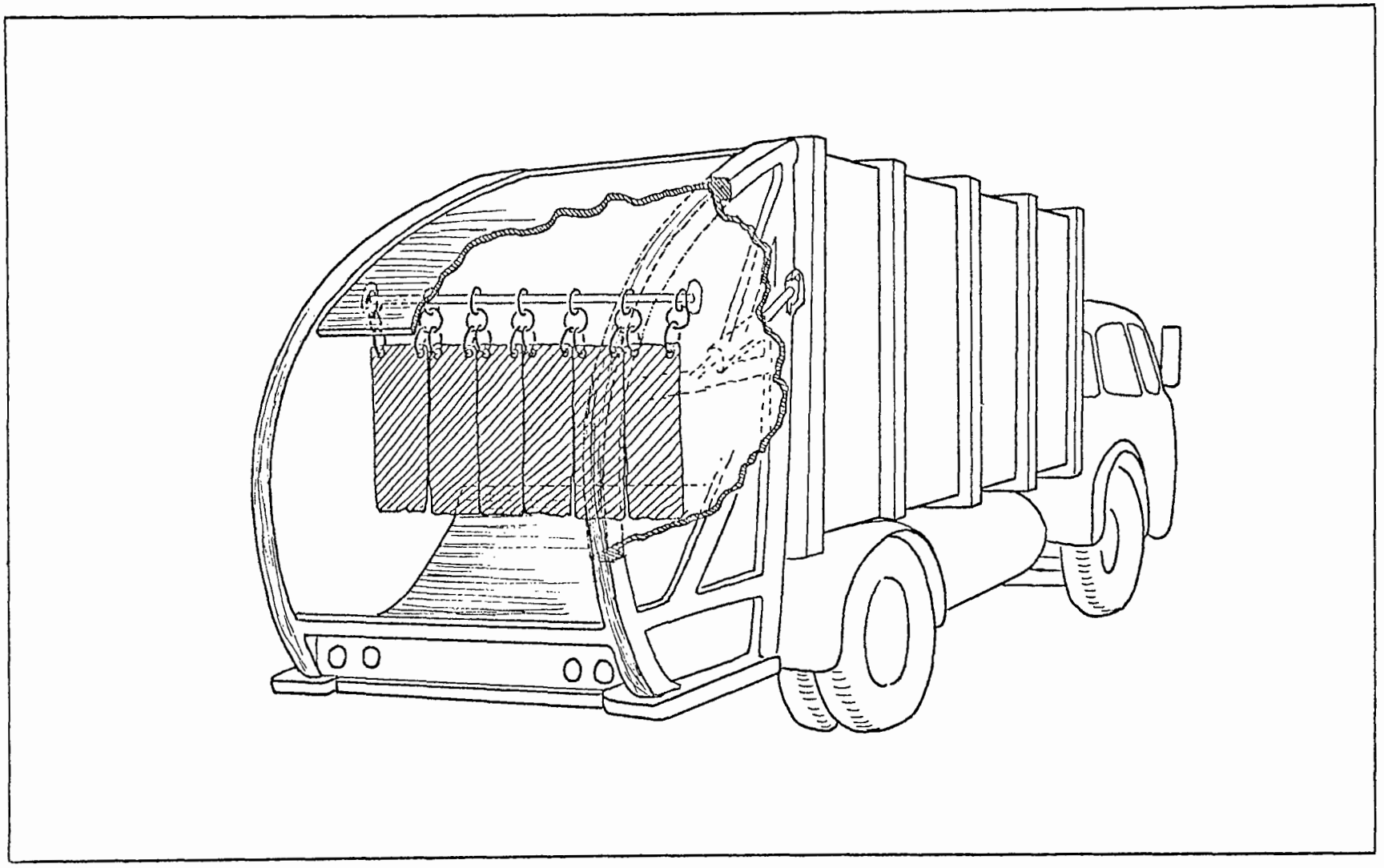

USE OF RUBBER "MUD GUARD" FLAPS
AS PROTECTION AGAINST OBJECTS EJECTED FROM THE HOPPER

3. stand to the side of the hopper with head averted until the cycle is finished.

In addition, the packer operator should be responsible for making sure that no one is at the back of the vehicle when the packer is operating. A signal should be worked out whereby he informs his coworkers that he is going to start the packer before operating the packer. Three employees had their fingers caught by the packer blade while walking behind the truck with their hand resting on the hopper sill.

A special mention also needs to be made on five cases in which employees were struck by private vehicles as they were walking from around the back of the vehicle or walking across the street. Employees should only pick up containers from one side of the street at a time, thus eliminating the hazard of them walking back and forth across busy thoroughfares. The driver should put on his emergency blinkers and pull off to the side as much as possible when he is at a collection stop. The blinkers warn motorists to proceed with caution. Employees should wear traffic vests that are bright and easily noticed by motorists, particularly during early morning and later afternoon hours and during inclement weather when visibility is poor. In addition, any employee who is walking from around the vehicle into oncoming traffic should look both directions to make sure the way is clear before stepping forward.

One serious injury occurred when the employee was struck by the tailgate as it flew open, fracturing his hand. His injury resulted in 16 days lost and $1,960 in costs. Apparently, the turnbuckles were not latched properly after the load had been dumped. Employees should make sure that all turnbuckles are latched properly before leaving the landfill, and, once back on the route, recheck them before dumping into the hopper. Employees should in addition check the turnbuckles as a regular part of checking the vehicle before leaving the yard.

Lifting-to-Dump Waste (FIGURE 1-6)

Lifting-to-dump waste accidents accounted for 6% of the OSHA recordable injuries for the third quarter. However, only a fifth of these injuries were directly related to the vehicle. Because the employees handle uncontained waste, many of the injuries are puncture wounds to the hands from boards with nails and cuts to the legs from carrying brush.

Several equipment related injuries were the result of throwing. Two employees fell when they thre chairs onto the open body truck. They were on bulky item collection. One employee was throwing a vacuum cleaner onto the truck, and the

hose struck his face. Employees should not be allowed to throw items. This action is a twisting motion that not only puts stress on the shoulders and back but also leaves the body off balance.

One of the most serious injuries that occurred during third quarter was when an employee was loading a washing machine onto an open body truck; it fell on his foot, fracturing it. Another employee was loading an ice box when he set it down on his finger. When employees are required to collect heavy, bulky items, the two-man crews should be trained on how to lift in unison. Many IRIS users have hydraulic lifts at the back of the trucks because the increased sill height on the open body trucks can easily cause strains. Some users employ a ramp and dolly method instead.

Employees also need to keep their elbows close to the body and to avoid sudden turning or jerking motions. Four employees struck their elbows and hands against the truck while loading.

Special caution should be taken in handling ceramic waste (e.g., toilet bowls, wash basins). In three cases, the ceramic waste slipped when employees were lifting to dump; it struck the edge of the truck, broke and cut the employee's hand or arm. If the item is too bulky or heavy, employees should get help, and ceramic waste items should be placed in the truck rather than thrown.

Again, two employees were loading waste while the hopper was operating. They were struck by items that swung around when the packer was operating. No one should be dumping in the hopper when it is operating.

Riding (FIGURE 1-7)

Riding on equipment accidents include riding on the step and riding in the cab. Riding accidents accounted for 5.4% of all accidents since IRIS began. It was the eighth highest in OSHA recordable injuries for the third quarter. The average riding accident resulted in 15 days lost and $472 in the third quarter. However, the proportion of riding on the step accidents to riding in the cab accidents was three to one.

Riding on step. Riding on the side or rear step accidents have totaled 116 or 3.9%. This is slightly higher than the dismounting from step total.

When employees are riding on the step they should:

1. maintain a firm grip on the handhold with both hands,

2. keep their bodies close to the truck, and

3. stand with feet placed squarely on the step and slightly apart.

Employees should not ride on the step if the truck is moving beyond two blocks' distance; they should ride in the cab. Another consideration for safety and comfort of the employee while riding on the step is step and handrail design (see discussion under dismounting from step).

A large percentage (35%) of the riding on step accidents were due to the vehicle jerking suddenly and throwing the rider off balance. These accidents do not include vehicle accidents. In 15 cases, the truck stopped suddenly (three were while avoiding pedestrians and cars). The sudden stops resulted in the employees falling off (one fractured his elbow), striking against the truck (one fractured his ribs), and spraining their backs. One accident that was nearly serious occurred when the employee's foot flew up in the air when the truck stopped suddenly (his shoes had oil on them); the packer was operating at the time and caught his foot, but his foot, luckily, was only cut by the blade. Eight accidents resulted when the truck hit a bump in the road, causing the employees to fall off. Seven accidents occurred when the truck went over chuckholes, and the employees fell off. Three employees fell off as the vehicle was making a turn; one fractured his foot. In six cases the truck went over a curb. In two cases the truck "downshifted" suddenly.

All of the above accidents are related to the driving ability of the driver. He needs to be aware of the fact that any jolts produced by the vehicle will affect the rider on the step. Several users require their driver to take a defensive driving course. However, the drivers should in addition be required to retake the course periodically, as they tend to relax their defenses with time. Any defensive driving course for sanitation truck drivers should include the following common sense rules that could have prevented most of the riding on step accidents:

1. Observe the posted speed limit.

2. Slow down when approaching any bumps or holes in the road.

3. When shifting gears, be sure the speed range is in the correct zone for shifting in order to avoid jerks.

4. When driving in residential neighborhoods, be on the lookout for children playing.

5. Trucks should be in low gear when going down inclines, and drivers should "pump" the brakes.

6. Drivers should be alert to low hanging and protruding branches when driving through narrow streets. Warn employees by sounding horn. If the limbs cannot be avoided, have the employees ride in the cab. Fourteen accidents occurred as the employees were struck by tree limbs. In two cases, the truck broke off a limb that struck the employee.

7. Drivers should not drive so close to the side of the road as to endanger their riders. One case in point occurred when the driver drove too close to a parked car. The employee riding on the side step had to resort to jumping over the car hood to avoid being caught between the two vehicles.

8. When passing intersections, drivers should be on the alert for cars running the stop sign or light.

9. Drivers should also be aware of the difference in truck movement produced by a truck with a full load as opposed to an empty truck. The stopping distance required increases with increased weight, and drivers should turn corners slowly when carrying a full load, as the load may shift when turning.

10. Drivers should maintain a distance of one car length per ten miles of speed between the sanitation vehicle and the vehicle in front; increase this distance as the load increases.

11. Drivers should decrease their driving speed during foul weather.

12. Drivers and passengers in the cab should wear seat belts.

In addition, employees should not be allowed to ride on the step any time while the vehicle is backing. Seven accidents occurred due to this unsafe act. The employee was caught between the truck and a tree, a telephone pole, a sign and another truck in five cases. One employee must have been dismounting at the same time since he caught his foot between the step and the curb as the truck backed up. One near-serious accident occurred as the employee was riding illegally on the step while the driver was backing. The driver started the packing mechanism. This startled the employee who had his hand and foot near the hopper. He jumped off and broke his heel.

Many users have safety rules against riding on the step while the driver is backing. Their safety rules specify instead that:

1. the employee be visible to the driver at all times, whether directly or by means of the side mirrors,

2. the employee directs the driver in his backing by means of hand signals, rather than verbal,

3. the employee is not walking backwards as he directs,

4. the employee has a clear view of the ground that the driver is backing over, and

5. the driver utilize the horn or back-up alarms when backing.

In addition, they specify that drivers are not to back up inclines. One user also suggests that instead of backing out of alleys into the flow of traffic, that the driver backs into the alley or dead-end street.

Drivers should not allow their riders to ride on vehicle parts that were not designed for riding. One employee was riding on the hopper sill. The packing mechanism was malfunctioning and threw him to the ground. Another employee was illegally riding on the step of the bin in front of the front loader. The step broke off, and the driver fortunately was able to stop short of running him over. Employees need to be supervised to make sure that they are not disobeying the safety rules. Once caught in violation, immediate action should be taken to reprimand the employee, since safety rules are only effective if they are enforced.

Two accidents occurred from the step collapsing. The welds and/or braces on the steps need to be periodically checked for cracks.

Employees should not be engaged in other activities while they are riding on the step. One employee turned around to see who was shouting and struck his head against a cement pole. Another employee was waving at a car and caught his hand in the packer blade. Another employee was trying to knock some mud off his boots as the truck was going up an incline. He fell off the side step and the truck ran over his leg. He sustained a bruise. In one other case the employee was leaning around the side, trying to operate the packing mechanism, when he was struck by a telephone pole. In one last case, the employee was packing the garbage when his glove became caught in the blace and trapped his arm in the hopper.

Because of the inherent danger of being next to the hopper when it is packing, employees should not be allowed to operate the packing mechanism if anyone is riding on the step. Several employees were careless of where they placed their hands or feet as the packer was operating. One employee was standing on the step with his foot on the hopper rail when the blade fractured his foot. Another employee had his toe bruised badly in a similar accident. Then there was the case mentioned earlier of the employee jumping off and fracturing his heel when the driver started the packing mechanism. Step and grab handle designs need to be re-examined to determine whether employees can ride comfortably on the steps. It may be that employees are resorting to riding with their hand on the side of the hopper and their foot on the hopper sill <u>because it is more comfortable</u>.

Several vehicle accidents occurred while employees were riding on the step. In five cases the sanitation truck was struck by private vehicles, and in two cases the truck hit light poles. Equipment design must be considered to make sure that when the employees are riding on the step, they do not block the rear signal lights. Drivers should be cautious when pulling back into traffic. They should make sure the way is clear before moving forward and should use their turn signals. Drivers should check their brake, signal and emergency lights on a regular basis, and any malfunction should be reported and repaired immediately.

<u>Riding in cab</u>. Forty-four accidents occurred while employees were riding in the cab since users began reporting injuries to IRIS. This was 1.5% of all injuries.

Of these, 60% were due to vehicle accidents. In five cases employees were injured when the sanitation truck struck another vehicle; in eleven cases, the sanitation truck was struck by a private vehicle. Three other accidents were due to the driver losing control of his vehicle and overturning; in one case excessive speed was at fault. Two other cases were that the truck swerved to avoid a car and ran into a post. It is highly recommended that employees wear seat belts when they ride in the cab, as this reduces the severity of vehicle accidents. Defensive driving courses are again recommended for drivers.

Employees should make sure that they latch the door properly when they close the cab door. In two cases, the employees fell out of the door when it opened while the truck was turning a corner. If the door locking mechanism is defective, employees should report it to the garage immediately.

Five other injuries were due to sudden jerking motions of the vehicle. In three cases the snowplow blade struck the curb, in one case the snowplow blade struck a manhole cover and in one case the truck struck a rock.

When the truck is at the landfill or transfer station to dump, the windows should be kept closed. Two employees received objects in their eyes when another vehicle drove by. Windows should also be kept closed when driving in areas with overhanging limbs. Two employees were struck in the eye by limbs when the vehicle passed through an alley.

Mounting (FIGURE 1-8)

Mounting equipment injuries resulted in the tenth highest number of OSHA recordable injuries (3.5%) for the third quarter. The average mounting injury resulted in 10 days lost and $296 during the third quarter so far. Approximately half the mounting injuries occurred while the employee was getting on the step and half while the employee was getting in the cab.

Mounting step. A total of 41 accidents occurred while the employee was getting on the step in the last three quarters.

A prominent factor in mounting the step injuries was interaction between the driver and the injured employee. In eight cases, the employees were hurrying to get on the step because the truck was pulling away. The employees either fell off or struck against the truck. In one case the truck was backing while the employee was mounting, and the employee slipped off the wet step, striking his knee on the step. That

employee could easily have been run over by the truck. Driver-rider coordination needs to be established. The driver should not move the truck until both employees are securely placed on the steps. The employees should signal to him that they are prepared for him to move forward.

When mounting the step employees should:

1. not get on until the truck is at a complete stop,

2. grasp the handrail firmly,

3. watch where they place their feet, and

4. step up firmly and steadily.

Employees should not be allowed to jump on. Extra caution should be observed when mounting onto a known wet or icy step. Again, step and handrail design (see dismounting step discussion) must be considered.

Eighteen injuries occurred when the employees slipped on the step as they were getting on. Five accidents were due to the employee misstepping when getting on the step and striking their legs on the step.

Two additional mounting step injuries occurred when the step collapsed. As mentioned previously, the welds and braces supporting the steps should be periodically inspected for cracks.

Getting in cab. A total of 45 accidents have been reported in which the employees were injured while they were getting into the cab. This accounts for 1.5% of all accidents reported.

Fourteen employees slipped on the running board and struck against the vehicle as they lost their balance. Another 11 injuries were due to striking against the vehicle while mounting. In another four cases, the employees were struck by the closing door. As mentioned under dismounting from the cab, to help employees maintain their balance while mounting, equipment should have convenient grab handles and slip resistant running boards.

When getting into the cab the employees should:

1. not mount unless the vehicle is completely stopped,

2. make sure the cab door is completely opened before mounting,

3. maintain a firm grasp on the handrail at all times,

4. watch to make sure their feet clear the step, and

5. step up firmly and steadily.

Driving (FIGURE 1-9)

There were 92 total driving accidents, which is 3% of all accidents reported. The average driving accident in the third quarter resulted in 7 days lost and $308.

A third of the injuries were due to sudden jerking movements of the vehicle. Six cases involved the steering wheel spinning when the truck struck a curb, rock, brick or hole, one employee's thumb was fractured. Five accidents occurred at the landfill. The compactor and dozer operators sustained strains when the equipment jerked as it struck a rock or log; one dozen operators slipped a disc in his back when driving over rough terrain. One truck and trailer jack-knifed at the landfill. Another truck was enroute from the incinerator to the landfill with a load of ashes when the truck overturned due to the ashes shifting, and yet another sweeper truck overturned when attempting a U turn. As recommended under the riding on step discussion, drivers should be made aware of the above hazards of driving through training. Defensive driving not only will reduce injuries to the drivers but also to their passengers.

Eleven accidents were due to collisions in which a private vehicle struck the sanitation truck, and only three accidents occurred in which the truck struck a car. One vehicle became out of control during rainy weather and collided with three cars before coming to a standstill. In two other cases, the drivers were injured when avoiding collision with another vehicle. One driver braked suddenly, but the other slid out of control. He was fired for drunk driving and for "tailgating." Drivers should be particularly careful driving when the road conditions are slippery and be on the lookout for swerving vehicles.

While driving, the employee should not be distracted; he should keep his attention on the road. One employee was adjusting the side mirror while driving and had his hand scraped when it was caught between the wall ramp and the mirror. Another driver turned to look out the window. His cigarette hit the steering wheel, throwing ashes into his eyes. He could have lost control of the vehicle.

Several drivers received objects in their eye while at the landfill and on windy days. They should keep their windows closed when excessive dust is encountered.

Three accidents to landfill equipment operators occurred when their vehicles' tires threw up objects. Eye protection is essential to these equipment operators since the cab of their vehicles are not enclosed. In addition, equipment modifications should be considered in order to provide screen guards for the vehicles.

A special mention should be made of the accidents that were due to equipment malfunction. In one case, the packer lid on the front loader was partially up. The lid caught on an overhead cable while the truck was going around a corner, causing the truck to overturn. The driver was severely bruised. Another accident was due to brake failure when the driver was attempting to stop at a red light; the truck rolled forward and struck a vehicle. In another case the hand brake broke off when the driver pulled on it at the stop; the truck rolled forward and was struck by a car. The drive shaft broke in another accident, causing the driver to lurch forward into the windshield. When the brakes locked on another driver, he drove off the road to avoid striking other vehicles and overturned. In another case, the seat fell in and the driver immediately slammed on his brakes, causing a sprain to his back. The accelerator stuck on one driver and his truck struck a fence. In one case, the back end of the vehicle fell off, causing the truck to stop suddenly and injuring all three crew members. All of these accidents could have resulted in very serious injuries. It must be emphasized that any problems with the vehicle should be reported immediately.

Operating Controls (FIGURE 1-10)

Almost all operating controls accidents were accidents that occurred as the employees were operating the packing mechanism. Although this activity resulted in less than 1% of the overall injuries, it caused several serious dismemberment injuries that were very high in days lost and costs.

All of the caught in packer accidents need to be discussed in detail. One fatality occurred in the second quarter to an employee who was cleaning behind the blade on a side loader. The driver claims that the employee told him to go ahead and operate the packing mechanism, but the employee was apparently still in the body, attempting to climb out, when the blade caught him. Another employee was attempting to dislodge a box that became caught between the blade and bed.

He was backing the blade up in order to push the box in, but he did not take his right hand off the lever. His hand slipped and activated the packing mechanism which amputated his hand. Another employee was reaching for paper that had fallen in front of the blade while the hopper was operating; it resulted in an amputation to his forearm. In another case, the employee was pushing garbage into the hopper when a coworker started the hopper; he bruised his hand. In still another case, the employee was rearranging boxes in the hopper while the packer was operating; he fractured his arm. Another employee was pushing garbage in with his left hand while his right hand rested on the lever; his hand slipped and activated the packing mechanism which fractured his hand. All of these injuries could easily have been prevented through adequate training and/or equipment modifications aimed at preventing caught-in-packer accidents.

The American National Standards Institute Z245.1-1975 Standard entitled "Safety Requirements for Refuse Collection and Compaction Equipment" has several standards relevant to caught-in-packer accidents. Section 7.3.3, "Controls" prescribes:

7.3.3 Controls

7.3.3.1 Each control shall be conspicuously labeled as to its function.

7.3.3.2 Controls (for example, for operating packer panel, tailgate, point-of-operation guards, ejector panel, container hoists) shall be designed and located to prevent unintentional activation.

7.3.3.2.2 Stop button controls shall be red, distinguishable from all other controls by size and color, and not be recessed.

7.3.3.3 Packing cycle controls shall be located so that the operator has a view of the loading sill. In order to minimize exposure to normal traffic, the packing cycle operating controls shall be located on the side of the vehicle opposite the normal traffic side of the vehicle. Two sets of packing cycle controls shall not be permitted except for additional dock height controls located on the same side and above the packing cycle controls.

7.3.3.4 Controls for raising the tailgate and unloading the compacted load shall be located away from the rear of the equipment.

7.3.3.5 For emergencies a means of stopping and moving the packer panel away from the pinch point (prior to the pinch point) shall be provided. Emergency stop controls shall be red, distinctly labeled as to function, and not be recessed.

Section 7.3.6, "Point-of-Operation Protection," of the standard is also designed to protect against caught-in-packer accidents:

7.3.6 Point-of-Operation Protection. The employee shall be protected from pinch points during the packing cycle by one of the following means:

(1) Deadman control from the initiation of the packing cycle until the packer panel clears the loading sill.

(2) An elevating hopper that raises any pinch point during the packing cycle at least 5 feet above the working surface.

(3) A movable guard that is interlocked with the lacking cycle so that it is in place before the packer panel is within 6 inches of the pinch point. The movable barrier shall be designed so that it shall not be hazardous in itself.

(4) A control that provides an interrupted cycle. Actuation of the control shall cause the packer panel to stop not less than 6 inches or more than 16 inches from the pinch point created by the packer panel as it moves past the hopper loading sill. The control shall require reactivation to complete the packing cycle by a subsequent motion by the operator.

(5) Other means, at least as effective as those given in 7.3.6(1) through 7.3.6(4), that will protect an employee from the pinch point.

One IRIS user modified their packer controls such that the operator is required to use both hands to operate the packing mechanism. Therefore, he will not have a free hand to insert in the hopper. However, employees must not be allowed to jam the controls so that it can be operated with one hand. Other industry equipment manufacturers solved this problem by programming the controls to not function unless the pressure on the controls are periodically relieved.

Several IRIS users have safety rules aimed at reducing the caught-in-packer accidents. They train their employees to:

1. operate the controls with the left hand if the controls are located on the right side,

2. keep head averted from the hopper,

3. wear eye protection,

4. never try to dislodge, catch or push back waste while the packer is operating,

5. signal to coworkers that he is starting the packer before operating, and

6. keep all employees away from the hopper while it is in operation.

In addition, the packer should be activated as soon as the hopper becomes filled. Overfilling the packer results in the excess garbage being pushed out and jamming in the blade as the packer is pushing the load into the body of the vehicle.

Twelve cases occurred in which the packer operator was struck by objects ejected from the hopper. One employee was avoiding a board that was ejected when he fell. Employees in addition need to be aware of objects that may swing around in the hopper when packed, such as branches.

Two other employees were struck by the tailgate when it broke loose as they were operating the packing mechanism. As mentioned previously, the employees should recheck the turnbuckles or latches after returning to the collection route from the landfill. Be certain that they are latched securely before approaching the rear of the truck.

Other Equipment Related Activities (FIGURES 1-11 to 1-17)

A brief discussion follows on other activities that were related to working with the equipment. Each resulted in less than 1% of the OSHA recordable injuries.

Repairing equipment (FIGURE 1-11). Although this activity resulted in less than 1% of the OSHA recordable injuries during third quarter, the average injury resulted in 12 days lost and $366. The equipment maintenance section's employees account for less than 10% of the IRIS workforce. Therefore, the frequency of repairing equipment injuries was quite high. Employers should reevaluate their safety rules for the maintenance shop. Perhaps the supervision has declined and employees need to be retrained.

Nearly 20% of the injuries were objects in the eye. Since employees frequently work under the vehicle, they are likely to receive dislodged particles in the eye while repairing. Rust particles were mentioned in four of the cases. Eye protection is recommended for all personnel repairing equipment. Face masks are recommended when welding, for additional protection to the face.

Six cases involved the handtool slipping from the employee's grasp and four cases involved vehicle parts falling. Employees should apply firm, steady pressure as wrenches are used. They should also ask for help in handling heavy or awkward vehicle parts.

Three cases involved the jack slipping. Whether the employees are positioning the jacks under the frame correctly and whether they block the wheels need to be examined.

Checking equipment malfunction (FIGURE 1-12). Four injuries occurred as the employees were burned by the hot radiator water when they were checking the overheating engines. Employees should be trained to not open the radiator cap while the engine is still hot. When the engine has cooled, the radiator cap can be removed with caution. Employees should cover the cap with a cloth, turn the cap a quarter of a turn to release pressure first and then slowly remove the cap, standing to one side. In addition, the radiator water level should be checked periodically, the radiator should be flushed regularly and the proper proportion of antifreeze added. A radiator overflow system can be installed also to reduce evaporation and to bypass having to open the radiator cap to check the water level.

Two other accidents were due to the employees being struck by the hood. Employees should use the safety catch to support the hood before placing any part of their body under the hood.

Opening equipment part (FIGURE 1-13). The employees were opening the tailgate or rear door in three quarters of the cases. The compacted load in the truck is under tremendous pressure. Therefore, employees must relieve the pressure before attempting to open the tailgate. Employees should relieve pressure by pulling the ejector blade forward toward the cab before unlatching the turnbuckles. In addition, when opening the tailgate, keep all body parts away from the swing arc of the back door.

Additional caution should be used when unlatching a rear door that hinges on the side rather than the top, since they are usually not hydraulically opened and tend to spring open once unlatched. One employee had his hand fractured in this manner. Four employees were struck by the turnbuckles or latches while unlatching the tailgate. Employees should unlatch the tailgate slowly and with steady pressure.

Control design modifications should be considered in reducing opening and closing the tailgate accidents. Several new front end loader models hydraulically unlatch the tailgate from the cab. Although this may reduce latching and unlatching tailgate injuries, it is recommended that the lever used to raise the tailgate be located on the side of the vehicle such that the operator may have a partial view of the rear of the truck. This will reduce injuries to other employees from the opening tailgate. Some sort of warning device such as flashing lights should also be operated when the tailgate is raised or lowered.

Two employees strained their backs when opening the tailgate. Employees should be utilizing their legs while lifting and avoid any jerking motions. Employees should also be sure they have a firm footing before beginning the lift.

In four other cases the employees strained their backs lifting the cab of the vehicle. This activity should be re-examined to determine if two-man lifts should be a requirement.

Emptying equipment (FIGURE 1-14). Almost all the injuries sustained while unloading the packer were due to the hazards of the location. Eight employees received objects in their eyes, and two employees slipped while walking to the

levers. Eye protection should be required, and employees should watch their step in walking on uneven terrain.

Employees should NOT stand beneath the lifted tailgate. One accident occurred in which three people were injured by the tailgate. After dumping the load, the hinge on the tailgate collapsed, and the door swung shut, hitting the ejector blade which was still out. The door bounced back. striking three employees who were standing next to it.

When backing the vehicle to position it for unloading, employees should follow the backing vehicle procedures outlined under the riding on step discussion. One employee was run over by another vehicle as he stepped back after operating the unloading mechanism. That IRIS user has since decided to install backup horns instead of bells in order to provide a louder warning device.

Washing vehicle (FIGURE 1-15). A total of ten accidents occurred as employees were washing vehicles. Three falls from the wet vehicle occurred as employees were attempting to wash the windshield. Employees should not be climbing on the vehicle to clean; they should be provided with cleaning tools that have long handles to eliminate this hazard. They should also be aware of the slippery conditions of the surface produced by the mixture of water and detergent. They should be provided with slip resistant footwear. In addition, the washing area should be inspected for adequate drainage.

Two other employees were injured by the water hose. One employee dropped it on his foot, cutting his ankle. The other burned his foot with the steam hose while turning it off; he was disobeying his organization's safety rules by not wearing boots.

Closing equipment part (FIGURE 1-16). Nine accidents occurred while employees were securing an equipment part. Eight injuries involved closing the tailgate; four employees had their fingers caught while latching the turnbuckle. One of these employees fractured three of his fingers while pushing the tailgate into the lock pin with the help of a coworker. Another got on the truck to secure the tailgate and fell off. In a third case, the employee was on the truck fastening the turnbuckle while the truck was in motion and fell off. Employees should be reminded not to climb on the vehicle to close the turnbuckle, especially when THE VEHICLE IS MOVING. Again, control designs should reevaluated to determine if manual latching can be eliminated.

Hooking or unhooking equipment part (FIGURE 1-17). Eight out of 11 of the hooking or unhooking equipment part accidents involved trailers. In three cases the trailer tongue slipped, causing strains to the employees. In one case, the trailer tongue fell on one employee's ankle. In the other four cases, the employee strained his back or hand. When handling trailers, employees should obtain help. Extra caution should be taken to avoid hooking or unhooking the trailer on an uneven surface that would cause the trailer tongue to jerk suddenly while being handled.

One very serious accident occurred when a commercial collection crew employee was hooking a bulk container by having the vehicle back up. The truck fork struck his hand, resulting in an amputation to his finger. This practice should not be allowed. The employees should position the bulk container into the forks rather than positioning the vehicle into the bulk container.

Preliminary Task/Hazard Analysis

The hazards and countermeasures that relate to equipment have been systematically compiled in outline form in a Preliminary Task/Hazard Analysis (FIGURE 1-18). IRIS collects injury data from many users in order that general industry injury trends can be analyzed and countermeasures developed. Each user is encouraged to analyze their injury patterns by separating the injuries as to what task the employee was performing at the time of the injury. Not only may IRIS be used to correct problem areas, but it is also an excellent source for designing an accident prevention system. Individual users, by reviewing the data in Accident Trends may be alerted to problems that other users have experienced and which are possibly potential high risk areas for them. Necessary steps may then be taken in order to prevent the need for countermeasures. A final way IRIS data can help users, is in the collection of data on serious but infrequent accidents. By increasing users' awareness of accidents of this type they hopefully may be prevented before they occur. Any suggestions or comments you may have regarding Accident Trends or any other facet of IRIS are welcomed.

USER NO. ALL
DETAILED DESCRIPTION OF
LIFTING-TO-DUMP CONTAINER ACCIDENTS

REPORTING PERIOD: JULY - SEPTEMBER 1976

THIS PROFILE IS A FORMATTED SENTENCE CONSISTING OF ACTIVITY, ACCIDENT SITE, ACCIDENT TYPE, NATURE OF INJURY AND PART OF BODY.

PROFILE	NO. INJ	DAYS	COSTS
EMPLOYEE WAS LIFTING TO DUMP PLASTIC BAG IN CUSTOMER'S YD FELL FROM WET LOADING DOCK ONTO PAVEMENT RESULTING IN SPRAIN OR STRAIN TO MULTIPLE BODY PARTS.	1	64	3029
EMPLOYEE WAS LIFTING TO DUMP STD MTL CONT IN ST AT BACK OF TRUCK OVEREXERTED SELF WITH STD MTL CONT WHICH WAS FULL RESULTING IN SPRAIN OR STRAIN TO ARM.	1	0	0
EMPLOYEE WAS LIFTING TO DUMP STD MTL CONT IN ST AT BACK OF TRUCK OVEREXERTED SELF WITH STD MTL CONT WHICH WAS UNUSUALLY HEAVY RESULTING IN SPRAIN OR STRAIN TO ABDOMEN.	1	29	454
EMPLOYEE WAS LIFTING TO DUMP STD MTL CONT IN ST AT BACK OF TRUCK GOT WASTE PARTICLES IN EYE RESULTING IN EYE IRRITATION TO EYES.	1	14	866
EMPLOYEE WAS LIFTING TO DUMP STD MTL CONT IN ST AT BACK OF TRUCK WAS STUNG BY INSECT RESULTING IN STING TO LEG.	1	0	12
EMPLOYEE WAS LIFTING TO DUMP PLASTIC BAG IN CUSTOMER'S YD INJURED SELF WITH PLASTIC BAG WHICH HAD PROTRUDING GLASS RESULTING IN CUT/PUNCTURE TO ARM.	1	0	50
EMPLOYEE WAS LIFTING TO DUMP CARDBD BOX IN ST AT CURB MADE SUDDEN MOVEMENT IN CATCHING CARDBOARD BOX WHICH WAS FULL AND WAS FALLING RESULTING IN SPRAIN OR STRAIN TO BACK.	1	13	617
EMPLOYEE WAS LIFTING TO DUMP STD MTL CONT IN ST AT BACK OF TRUCK OVEREXERTED SELF WITH STD MTL CONT WHICH WAS FULL RESULTING IN SPRAIN OR STRAIN TO BACK.	5	35	1644
EMPLOYEE WAS LIFTING TO DUMP STD MTL CONT IN ST AT BACK OF TRUCK INJURED SELF WITH STD MTL CONT WHICH WAS UNUSUALLY HEAVY AND WAS WET RESULTING IN BRUISE TO TOES.	1	26	679
EMPLOYEE WAS LIFTING TO DUMP PLASTIC BAG IN ST AT CURB INJURED SELF WITH PLASTIC BAG WHICH WAS UNUSUALLY HEAVY AND HAD PROTRUDING GLASS RESULTING IN CUT/PUNCTURE TO ANKLE.	1	11	225
EMPLOYEE WAS LIFTING TO DUMP STD MTL CONT IN ST AT BACK OF TRUCK SLIPPED STEPPING ON PAVEMENT RESULTING IN SPRAIN OR STRAIN TO KNEE.	1	0	0
EMPLOYEE WAS LIFTING TO DUMP STD MTL CONT IN ST AT BACK OF TRUCK WAS CAUGHT BETWEEN CONT & EDGE OF HOPPER RESULTING IN CUT/PUNCTURE TO FINGERS.	1	0	0
EMPLOYEE WAS LIFTING TO DUMP STD MTL CONT IN ST AT BACK OF TRUCK WAS STRUCK BY STD MTL CONT WHICH WAS FULL RESULTING IN BRUISE TO LEG.	1	5	320
EMPLOYEE WAS LIFTING TO DUMP STD MTL CONT IN ST AT BACK OF TRUCK OVEREXERTED SELF WITH STD MTL CONT WHICH WAS FULL RESULTING IN SPRAIN OR STRAIN TO SHOULDER.	1	4	242
EMPLOYEE WAS LIFTING TO DUMP STD MTL CONT IN ST AT BACK OF TRUCK OVEREXERTED SELF WITH STD MTL CONT WHICH WAS HVY (WOOD) RESULTING IN SPRAIN OR STRAIN TO SHOULDER.	1	2	159
EMPLOYEE WAS LIFTING TO DUMP STD MTL CONT IN ALLEY AT BACK OF TRUCK STRUCK AGAINST STEP OF VEH RESULTING IN DISLOCATION TO KNEE.	1	4	130
EMPLOYEE WAS LIFTING TO DUMP STD MTL CONT IN ST AT BACK OF TRUCK OVEREXERTED SELF WITH STD MTL CONT WHICH WAS FULL RESULTING IN DISLOCATION TO SHOULDER.	1	0	0
EMPLOYEE WAS LIFTING TO DUMP STD MTL CONT IN ST AT BACK OF TRUCK INJURED SELF WITH CONTAINER LID RESULTING IN BRUISE TO FINGERS.	1	0	12
EMPLOYEE WAS LIFTING TO DUMP PLASTIC BAG IN ALLEY AT BACK OF TRUCK WAS STRUCK BY SHARP OBJ WHICH FELL OUT OF CONT RESULTING IN CUT/PUNCTURE TO LEG.	1	0	0
EMPLOYEE WAS LIFTING TO DUMP PLASTIC BAG IN ST AT BACK OF TRUCK WAS STRUCK BY GLASS WHICH WAS EJTD FROM HOPPER RESULTING IN CUT/PUNCTURE TO ARM.	1	22	676
EMPLOYEE WAS LIFTING TO DUMP STD MTL CONT IN ST AT BACK OF TRUCK OVEREXERTED SELF WITH STD MTL CONT WHICH WAS HVY (YARD CLIPPINGS) RESULTING IN SPRAIN OR STRAIN TO BACK.	1	0	33
EMPLOYEE WAS LIFTING TO DUMP STD MTL CONT IN ALLEY AT BACK OF TRUCK OVEREXERTED SELF WITH STD MTL CONT WHICH WAS UNUSUALLY HEAVY RESULTING IN SPRAIN OR STRAIN TO BACK.	1	4	212

PROFILE	NO. INJ	DAYS	COSTS
EMPLOYEE WAS LIFTING TO DUMP TOTE BARREL IN ST AT BACK OF TRUCK OVEREXERTED SELF WITH TOTE BARREL WHICH WAS FULL AND WAS UNUSUALLY LARGE RESULTING IN SPRAIN OR STRAIN TO BACK.	1	4	67
EMPLOYEE WAS LIFTING TO DUMP PLASTIC BAG IN ST AT BACK OF TRUCK OVEREXERTED SELF WITH PLASTIC BAG WHICH WAS UNUSUALLY HEAVY AND WAS BEING HNDLD W OTHER CONT RESULTING IN SPRAIN OR STRAIN TO SHOULDE	1	3	155
EMPLOYEE WAS LIFTING TO DUMP PLASTIC BAG IN ST AT BACK OF TRUCK OVEREXERTED SELF WITH PLASTIC BAG WHICH WAS HVY (YARD CLIPPINGS) RESULTING IN SPRAIN OR STRAIN TO BACK.	1	54	858
EMPLOYEE WAS LIFTING TO DUMP CARDBD BOX IN ST AT BACK OF TRUCK FELL WHILE ON OILY GROUND AND STRUCK AGNST RUNNING BOARD RESULTING IN BRUISE TO ELBOW.	1	7	252
EMPLOYEE WAS LIFTING TO DUMP PLASTIC BAG IN ALLEY AT BACK OF TRUCK INJURED SELF WITH PLASTIC BAG WHICH HAD PROTRUDING GLASS RESULTING IN CUT/PUNCTURE TO LEG.	4	4	415
EMPLOYEE WAS LIFTING TO DUMP CARDBD BOX IN ST AT BACK OF TRUCK OVEREXERTED SELF WITH CARDBOARD BOX WHICH WAS FULL RESULTING IN SPRAIN OR STRAIN TO BACK.	1	16	415
EMPLOYEE WAS LIFTING TO DUMP PLASTIC BAG IN ST AT BACK OF TRUCK STRUCK AGAINST BACK OF VEH RESULTING IN CUT/PUNCTURE TO ARM.	1	6	164
EMPLOYEE WAS LIFTING TO DUMP TOTE BARREL IN CUSTOMER'S YD INJURED SELF WITH TOTE BARREL WHICH WAS FULL AND HAD SHARP EDGES RESULTING IN ABRASIONS TO KNEE.	1	0	0
EMPLOYEE WAS LIFTING TO DUMP STD MTL CONT IN ST AT BACK OF TRUCK INJURED SELF WITH STD MTL CONT WHICH WAS FULL AND HAD SHARP EDGES RESULTING IN CUT/PUNCTURE TO ABDOMEN.	1	0	30
EMPLOYEE WAS LIFTING TO DUMP PLASTIC BAG IN ST AT BACK OF TRUCK OVEREXERTED SELF WITH PLASTIC BAG WHICH WAS HVY (WOOD) RESULTING IN SPRAIN OR STRAIN TO NECK.	1	16	560
EMPLOYEE WAS LIFTING TO DUMP STD MTL CONT IN ALLEY AT BACK OF TRUCK WAS STRUCK BY VEH RESULTING IN BRUISE TO CHEST.	1	0	10
EMPLOYEE WAS LIFTING TO DUMP PLASTIC BAG IN ST AT BACK OF TRUCK INJURED SELF WITH PLASTIC BAG WHICH HAD PROTRUDING GLASS RESULTING IN CUT/PUNCTURE TO LEG.	6	4	324
EMPLOYEE WAS LIFTING TO DUMP STD MTL CONT IN ST AT BACK OF TRUCK INJURED SELF WITH STD MTL CONT WHICH WAS FULL AND WAS BEING HNDLD W OTHER CONT RESULTING IN FRACTURE TO FOOT.	1	29	1324
EMPLOYEE WAS LIFTING TO DUMP PLASTIC BAG IN ST AT CURB FELL WHILE ON WET CURB AND STRUCK AGNST BACK OF VEH RESULTING IN BRUISE TO CHEST.	1	55	234
EMPLOYEE WAS LIFTING TO DUMP UNBUNDLED SHRUBBERY IN ALLEY AT BACK OF TRUCK WAS STUNG BY INSECT RESULTING IN POISONING OR ALLERGIC REACTION TO ARM.	1	3	88
EMPLOYEE WAS LIFTING TO DUMP TOTE BARREL IN ST AT BACK OF TRUCK WAS STRUCK BY TOTE BARREL WHICH WAS UNUSUALLY HEAVY AND HAD BOUNCED BACK FROM HOPPER RESULTING IN BRUISE TO ELBOW.	1	0	0
EMPLOYEE WAS LIFTING TO DUMP STD MTL CONT IN ST AT BACK OF TRUCK WAS STRUCK BY CHEMICAL WHICH WAS EJTD FROM HOPPER RESULTING IN CHEMICAL BURN TO MULTIPLE BODY PARTS.	1	2	155
EMPLOYEE WAS LIFTING TO DUMP PLASTIC BAG IN ST AT CURB INJURED SELF WITH PLASTIC BAG WHICH HAD PROTRUDING WASTE RESULTING IN CUT/PUNCTURE TO KNEE.	1	0	0
EMPLOYEE WAS LIFTING TO DUMP CARDBD BOX IN ALLEY AT BACK OF TRUCK OVEREXERTED SELF WITH CARDBOARD BOX WHICH WAS HVY (PAPER) RESULTING IN SPRAIN OR STRAIN TO BACK.	1	5	170
EMPLOYEE WAS LIFTING TO DUMP CARDBD BOX IN ST AT BACK OF TRUCK OVEREXERTED SELF WITH CARDBOARD BOX WHICH WAS UNUSUALLY HEAVY RESULTING IN SPRAIN OR STRAIN TO BACK.	1	12	100
EMPLOYEE WAS LIFTING TO DUMP WHEELED CART IN ST AT BACK OF TRUCK OVEREXERTED SELF WITH WHEELED CART WHICH WAS FULL AND WAS UNUSUALLY LARGE RESULTING IN SPRAIN OR STRAIN TO BACK.	1	6	409
EMPLOYEE WAS LIFTING TO DUMP CARDBD BOX IN ST AT BACK OF TRUCK WAS HURT BY HANDLING CARDBOARD BOX WHICH HAD PROTRUDING GLASS RESULTING IN CUT/PUNCTURE TO ARM.	1	0	48
EMPLOYEE WAS LIFTING TO DUMP STD MTL CONT IN CUSTOMER'S YD WAS STUNG BY INSECT RESULTING IN STING TO ARM.	1	0	36
EMPLOYEE WAS LIFTING TO DUMP STD MTL CONT IN ST AT BACK OF TRUCK STRUCK AGAINST SIDE OF VEH RESULTING IN BRUISE TO FINGERS.	1	10	276
EMPLOYEE WAS LIFTING TO DUMP PLASTIC BAG IN ST AT BACK OF TRUCK WAS STRUCK BY CHEMICAL WHICH FELL OUT OF CONT RESULTING IN DERMATITIS TO LEG.	1	2	69
EMPLOYEE WAS LIFTING TO DUMP STD MTL CONT IN ALLEY AT BACK OF TRUCK STRUCK AGAINST BACK OF VEH RESULTING IN BRUISE TO ARM.	1	1	70
EMPLOYEE WAS LIFTING TO DUMP STD MTL CONT IN ALLEY AT BACK OF TRUCK STRUCK AGAINST HANDLE ON VEH RESULTING IN BRUISE TO ARM.	1	2	90

PROFILE	NO. INJ	DAYS	COSTS
EMPLOYEE WAS LIFTING TO DUMP PLASTIC BAG IN ST AT BACK OF TRUCK OVEREXERTED SELF WITH PLASTIC BAG WHICH WAS UNUSUALLY HEAVY RESULTING IN SPRAIN OR STRAIN TO BACK.	1	4	185
EMPLOYEE WAS LIFTING TO DUMP PLASTIC BAG IN ST AT BACK OF TRUCK WAS HURT BY HANDLING PLASTIC BAG WHICH HAD PROTRUDING GLASS RESULTING IN CUT/PUNCTURE TO HAND.	2	12	297
EMPLOYEE WAS LIFTING TO DUMP CARDBD BOX IN ST AT BACK OF TRUCK WAS STUNG BY INSECT RESULTING IN STING TO ARM.	1	0	20
EMPLOYEE WAS LIFTING TO DUMP PLASTIC BAG IN ST AT BACK OF TRUCK INJURED SELF WITH PLASTIC BAG WHICH HAD A PROTRUDING HYPODERMIC NEEDLE RESULTING IN CUT/PUNCTURE TO KNEE.	1	0	6
EMPLOYEE WAS LIFTING TO DUMP STD MTL CONT IN ST AT BACK OF TRUCK WAS STRUCK BY ACID WHICH FELL OUT OF CONT RESULTING IN CHEMICAL BURN TO EYES.	1	0	24
EMPLOYEE WAS LIFTING TO DUMP STD MTL CONT IN ST AT BACK OF TRUCK SLIPPED WHILE ON WET PAVEMENT AND STRUCK AGNST EDGE OF HOPPER RESULTING IN FRACTURE TO ELBOW.	1	2	80
EMPLOYEE WAS LIFTING TO DUMP STD MTL CONT IN ST AT BACK OF TRUCK STRUCK AGAINST EDGE OF HOPPER RESULTING IN BRUISE TO THUMB.	1	25	1144
EMPLOYEE WAS LIFTING TO DUMP STD MTL CONT IN ST AT BACK OF TRUCK SLIPPED WHILE ON STEP OF VEH AND STRK AGNST STD MTL CONT RESULTING IN BRUISE TO KNEE.	1	6	448
EMPLOYEE WAS LIFTING TO DUMP PLASTIC BAG IN ST AT CURB INJURED SELF WITH PLASTIC BAG WHICH HAD PROTRUDING GLASS RESULTING IN CUT/PUNCTURE TO LEG.	3	0	119
EMPLOYEE WAS LIFTING TO DUMP STD MTL CONT IN ST AT CURB OVEREXERTED SELF WITH STD MTL CONT WHICH WAS UNUSUALLY HEAVY RESULTING IN SPRAIN OR STRAIN TO BACK.	1	13	677
EMPLOYEE WAS LIFTING TO DUMP PLASTIC BAG IN CUSTOMER'S YD SLIPPED STEPPING ON WET PAVEMENT RESULTING IN SPRAIN OR STRAIN TO BACK.	1	14	492
EMPLOYEE WAS LIFTING TO DUMP STD MTL CONT AT UNK SITE OVEREXERTED SELF WITH STD MTL CONT WHICH WAS UNUSUALLY HEAVY RESULTING IN SPRAIN OR STRAIN TO BACK.	1	0	38
EMPLOYEE WAS LIFTING TO DUMP STD MTL CONT IN CUSTOMER'S YD WAS STUNG BY INSECT RESULTING IN STING TO HAND.	1	0	30
EMPLOYEE WAS LIFTING TO DUMP STD MTL CONT IN ST AT BACK OF TRUCK STRUCK AGAINST EDGE OF HOPPER RESULTING IN BRUISE TO CHEST.	2	33	1549
EMPLOYEE WAS LIFTING TO DUMP STD MTL CONT IN ALLEY AT CURB OVEREXERTED SELF WITH STD MTL CONT WHICH WAS FULL RESULTING IN SPRAIN OR STRAIN TO SHOULDER.	1	41	1443
EMPLOYEE WAS LIFTING TO DUMP PLASTIC BAG IN ALLEY AT BACK OF TRUCK INJURED SELF WITH PLASTIC BAG WHICH HAD PROTRUDING GLASS RESULTING IN CUT/PUNCTURE TO ARM.	2	0	77
EMPLOYEE WAS LIFTING TO DUMP PLASTIC BAG IN ST AT FRONT OF TRUCK OVEREXERTED SELF WITH PLASTIC BAG WHICH WAS UNUSUALLY HEAVY RESULTING IN SPRAIN OR STRAIN TO BACK.	1	0	0
EMPLOYEE WAS LIFTING TO DUMP PLASTIC BAG IN ALLEY AT BACK OF TRUCK OVEREXERTED SELF WITH PLASTIC BAG WHICH WAS FULL RESULTING IN SPRAIN OR STRAIN TO BACK.	1	0	22
EMPLOYEE WAS LIFTING TO DUMP PLASTIC BAG IN ALLEY AT BACK OF TRUCK OVEREXERTED SELF WITH PLASTIC BAG WHICH WAS HVY (ROCKS) RESULTING IN SPRAIN OR STRAIN TO BACK.	1	11	515
EMPLOYEE WAS LIFTING TO DUMP PLASTIC BAG IN ST AT BACK OF TRUCK WAS HURT BY HANDLING PLASTIC BAG WHICH HAD PROTRUDING GLASS RESULTING IN CUT/PUNCTURE TO ARM.	2	3	146
EMPLOYEE WAS LIFTING TO DUMP PLASTIC BAG IN ST AT BACK OF TRUCK STRUCK AGAINST EDGE OF HOPPER RESULTING IN FRACTURE TO WRIST.	1	17	750
EMPLOYEE WAS LIFTING TO DUMP STD MTL CONT IN ST AT BACK OF TRUCK OVEREXERTED SELF WITH STD MTL CONT WHICH WAS HVY (WOOD) RESULTING IN SPRAIN OR STRAIN TO BACK.	1	10	469
EMPLOYEE WAS LIFTING TO DUMP STD MTL CONT IN ST AT BACK OF TRUCK WAS CAUGHT BETWEEN CONT & EDGE OF HOPPER (CONT WAS FALLING) RESULTING IN BRUISE TO HAND.	1	0	0
EMPLOYEE WAS LIFTING TO DUMP PLASTIC BAG IN ST AT BACK OF TRUCK OVEREXERTED SELF WITH PLASTIC BAG WHICH WAS FULL RESULTING IN SPRAIN OR STRAIN TO BACK.	2	6	318
EMPLOYEE WAS LIFTING TO DUMP STD MTL CONT IN ALLEY AT BACK OF TRUCK WAS STRUCK BY CONT HANDLED BY COWORKER RESULTING IN ABRASIONS TO SHOULDER.	1	1	65
EMPLOYEE WAS LIFTING TO DUMP STD MTL CONT IN ST AT BACK OF TRUCK STRUCK AGAINST BACK OF VEH RESULTING IN BRUISE TO ELBOW.	1	0	0
EMPLOYEE WAS LIFTING TO DUMP STD MTL CONT IN ST AT BACK OF TRUCK WAS STRUCK BY CHEMICAL WHICH FELL OUT OF CONT RESULTING IN CHEMICAL BURN TO LEG.	1	0	10

PROFILE	NO. INJ	DAYS	COSTS
EMPLOYEE WAS LIFTING TO DUMP PLASTIC BAG IN ST AT BACK OF TRUCK INJURED SELF WITH PLASTIC BAG WHICH HAD PROTRUDING GLASS RESULTING IN CUT/PUNCTURE TO KNEE.	1	1	65
EMPLOYEE WAS LIFTING TO DUMP STD MTL CONT IN ST AT BACK OF TRUCK OVEREXERTED SELF WITH STD MTL CONT WHICH WAS HVY (ROCKS) RESULTING IN SPRAIN OR STRAIN TO SHOULDER.	1	3	145
EMPLOYEE WAS LIFTING TO DUMP STD MTL CONT IN ST AT BACK OF TRUCK MADE SUDDEN MOVEMENT IN CATCHING STD MTL CONT WHICH WAS UNUSUALLY HEAVY RESULTING IN SPRAIN OR STRAIN TO WRIST.	1	16	242
EMPLOYEE WAS LIFTING TO DUMP PLASTIC BAG IN ST AT BACK OF TRUCK INJURED SELF WITH PLASTIC BAG WHICH HAD PROTRUDING WASTE RESULTING IN CUT/PUNCTURE TO LEG.	1	7	179
EMPLOYEE WAS LIFTING TO DUMP CARDBD BOX IN ALLEY AT CURB OVEREXERTED SELF WITH CARDBOARD BOX WHICH WAS FULL RESULTING IN SPRAIN OR STRAIN TO TRUNK.	1	12	594
EMPLOYEE WAS LIFTING TO DUMP PLASTIC BAG IN ST AT BACK OF TRUCK WAS HURT BY HANDLING PLASTIC BAG WHICH HAD PROTRUDING GLASS RESULTING IN CUT/PUNCTURE TO THUMB.	1	0	0
EMPLOYEE WAS LIFTING TO DUMP PLASTIC BAG IN ST AT BACK OF TRUCK WAS STUNG BY INSECT RESULTING IN STING TO ARM.	1	0	0
EMPLOYEE WAS LIFTING TO DUMP PLASTIC BAG IN ST AT BACK OF TRUCK WAS HURT BY HANDLING PLASTIC BAG WHICH HAD PROTRUDING GLASS RESULTING IN CUT/PUNCTURE TO FINGERS.	1	2	92
EMPLOYEE WAS LIFTING TO DUMP STD MTL CONT IN ST AT BACK OF TRUCK WAS STRUCK BY PARTICLES IN WASTE WHICH WAS EJTD FROM HOPPER RESULTING IN EYE IRRITATION TO EYES.	1	0	39
EMPLOYEE WAS LIFTING TO DUMP STD MTL CONT IN ST AT BACK OF TRUCK WAS CAUGHT IN HANDLE OF CONT RESULTING IN SPRAIN OR STRAIN TO FINGERS.	1	4	200
EMPLOYEE WAS LIFTING TO DUMP PLASTIC BAG IN ALLEY AT CURB INJURED SELF WITH PLASTIC BAG WHICH HAD PROTRUDING GLASS RESULTING IN SPRAIN OR STRAIN TO LEG.	1	3	141
EMPLOYEE WAS LIFTING TO DUMP STD MTL CONT IN ST AT BACK OF TRUCK OVEREXERTED SELF WITH STD MTL CONT WHICH WAS UNUSUALLY HEAVY RESULTING IN SPRAIN OR STRAIN TO BACK.	1	0	0
EMPLOYEE WAS LIFTING TO DUMP PLASTIC CAN IN ST AT BACK OF TRUCK OVEREXERTED SELF WITH PLASTIC CAN WHICH WAS UNUSUALLY HEAVY RESULTING IN SPRAIN OR STRAIN TO BACK.	1	13	289
EMPLOYEE WAS LIFTING TO DUMP STD MTL CONT IN ALLEY AT CURB INJURED SELF WITH STD MTL CONT WHICH WAS FULL AND ON WHICH THE HANDLE BROKE RESULTING IN BRUISE TO CHEEK.	1	0	0
EMPLOYEE WAS LIFTING TO DUMP PLASTIC BAG IN ST AT BACK OF TRUCK CONTACTED CAUSTIC OR TOXIC EXHAUST FUMES RESULTING IN ASPHYXIATION OR DROWNING TO INTERNAL ORGANS.	2	0	104
EMPLOYEE WAS LIFTING TO DUMP STD MTL CONT IN ST AT BACK OF TRUCK FELL ON PAVEMENT RESULTING IN BRUISE TO HIPS.	1	0	20
EMPLOYEE WAS LIFTING TO DUMP PLASTIC BAG IN ST AT CURB WAS HURT BY HANDLING PLASTIC BAG WHICH HAD PROTRUDING GLASS RESULTING IN CUT/PUNCTURE TO HAND.	3	8	284
EMPLOYEE WAS LIFTING TO DUMP OTHER CONT TYPE IN ST AT BACK OF TRUCK OVEREXERTED SELF WITH OTHER CONT TYPE WHICH WAS HVY (PAPER) RESULTING IN SPRAIN OR STRAIN TO BACK.	1	0	0
EMPLOYEE WAS LIFTING TO DUMP STD MTL CONT IN ST AT BACK OF TRUCK OVEREXERTED SELF WITH STD MTL CONT WHICH WAS UNUSUALLY HEAVY RESULTING IN SPRAIN OR STRAIN TO CHEST.	1	4	258
EMPLOYEE WAS LIFTING TO DUMP RUG IN ST AT BACK OF TRUCK INJURED SELF WITH RUG RESULTING IN CUT/PUNCTURE TO LEG.	1	0	6
EMPLOYEE WAS LIFTING TO DUMP STD MTL CONT ON VEHICLE STRUCK AGAINST BACK OF VEH RESULTING IN BRUISE TO ELBOW.	1	0	9
EMPLOYEE WAS LIFTING TO DUMP STD MTL CONT IN ST AT BACK OF TRUCK WAS CAUGHT BETWEEN CONT & EDGE OF HOPPER RESULTING IN BRUISE TO HAND.	1	4	110
EMPLOYEE WAS LIFTING TO DUMP PLASTIC BAG IN ST AT BACK OF TRUCK OVEREXERTED SELF WITH PLASTIC BAG WHICH WAS FULL AND WAS BEING HNDLD W OTHER CONT RESULTING IN SPRAIN OR STRAIN TO BACK.	1	0	0
EMPLOYEE WAS LIFTING TO DUMP STD MTL CONT IN CUSTOMER'S YD STEPPED ON BOARD WITH NAIL RESULTING IN CUT/PUNCTURE TO FOOT.	1	1	71
EMPLOYEE WAS LIFTING TO DUMP STD MTL CONT IN ST AT BACK OF TRUCK DEVELOPED INJURY OVER TIME RESULTING IN INFLAMMATION OF THE JOINTS TO KNEE.	1	0	6
EMPLOYEE WAS LIFTING TO DUMP STD MTL CONT IN ST AT CURB OVEREXERTED SELF WITH STD MTL CONT WHICH WAS FULL RESULTING IN SPRAIN OR STRAIN TO BACK.	2	13	179
EMPLOYEE WAS LIFTING TO DUMP STD MTL CONT IN ST AT CURB OVEREXERTED SELF WITH STD MTL CONT WHICH WAS UNUSUALLY HEAVY RESULTING IN SPRAIN OR STRAIN TO SHOULDER.	1	4	194

PROFILE	NO. INJ	DAYS	COSTS
EMPLOYEE WAS LIFTING TO DUMP PLASTIC BAG IN ST AT BACK OF TRUCK STRUCK AGAINST EDGE OF HOPPER RESULTING IN BRUISE TO ELBOW.	1	0	0
EMPLOYEE WAS LIFTING TO DUMP STD MTL CONT IN ST AT BACK OF TRUCK WAS HURT BY HANDLING STD MTL CONT WHICH HAD PROTRUDING GLASS RESULTING IN CUT/PUNCTURE TO FINGERS.	1	12	355
TOTAL	128	779	28185

FIGURE 1-3

USER NO. ALL
DETAILED DESCRIPTION OF
DUMPING CONTAINER ACCIDENTS

REPORTING PERIOD: JULY - SEPTEMBER 1976

THIS PROFILE IS A FORMATTED SENTENCE CONSISTING OF ACTIVITY, ACCIDENT SITE, ACCIDENT TYPE, NATURE OF INJURY AND PART OF BODY.

PROFILE	NO. INJ	DAYS	COSTS
EMPLOYEE WAS DUMPING STD MTL CONT IN ST AT BACK OF TRUCK FELL ON DEPRESSION RESULTING IN SPRAIN OR STRAIN TO ANKLE.	1	0	61
EMPLOYEE WAS DUMPING STD MTL CONT IN ST AT BACK OF TRUCK STRUCK AGAINST BACK OF VEH RESULTING IN BRUISE TO WRIST.	1	1	48
EMPLOYEE WAS DUMPING STD MTL CONT IN ALLEY AT BACK OF TRUCK MADE SUDDEN MOVEMENT RESULTING IN DISLOCATION TO HIPS.	1	83	4429
EMPLOYEE WAS DUMPING STD MTL CONT IN CUSTOMER'S YD WAS STRUCK BY SHARP OBJ WHICH FELL OUT OF CONT RESULTING IN CUT/PUNCTURE TO ARM.	1	0	37
EMPLOYEE WAS DUMPING STD MTL CONT IN ST AT BACK OF TRUCK WAS CAUGHT BETWEEN CONT & EDGE OF HOPPER RESULTING IN BRUISE TO HAND.	1	0	0
EMPLOYEE WAS DUMPING STD MTL CONT IN ST AT BACK OF TRUCK WAS STRUCK BY CHEMICAL WHICH FELL OUT OF CONT RESULTING IN DERMATITIS TO UNK BODY PART.	1	1	33
EMPLOYEE WAS DUMPING PLASTIC BAG IN ST AT BACK OF TRUCK WAS STRUCK BY CERAMIC WASTE WHICH FELL OUT OF CONT RESULTING IN CUT/PUNCTURE TO LEG.	1	2	156
EMPLOYEE WAS DUMPING STD MTL CONT IN ST AT BACK OF TRUCK WAS STRUCK BY PIECE OF METAL WHICH WAS EJTD FROM HOPPER RESULTING IN CUT/PUNCTURE TO EYES.	1	6	324
EMPLOYEE WAS DUMPING STD MTL CONT IN ST AT BACK OF TRUCK OVEREXERTED SELF WITH STD MTL CONT WHICH WAS UNUSUALLY HEAVY RESULTING IN SPRAIN OR STRAIN TO SHOULDER.	2	12	456
EMPLOYEE WAS DUMPING STD MTL CONT IN ST AT BACK OF TRUCK STRUCK AGAINST BACK OF VEH RESULTING IN BRUISE TO ELBOW.	1	0	12
EMPLOYEE WAS DUMPING STD MTL CONT IN ALLEY AT BACK OF TRUCK OVEREXERTED SELF WITH STD MTL CONT WHICH WAS FULL RESULTING IN SPRAIN OR STRAIN TO KNEE.	1	12	94
EMPLOYEE WAS DUMPING STD MTL CONT IN ST AT BACK OF TRUCK CONTACTED CAUSTIC OR TOXIC CHEMICAL RESULTING IN CHEMICAL BURN TO HAND.	1	23	1055
EMPLOYEE WAS DUMPING STD MTL CONT IN ST AT BACK OF TRUCK GOT AIRBORNE PARTICLES IN EYE RESULTING IN EYE IRRITATION TO EYES.	2	0	48
EMPLOYEE WAS DUMPING 300 GAL PLASTIC CONT IN ST AT CURB OVEREXERTED SELF WITH 300 GAL PLASTIC CONT WHICH WAS UNUSUALLY HEAVY AND WAS UNUSUALLY LARGE RESULTING IN SPRAIN OR STRAIN TO CHEST.	1	0	57
EMPLOYEE WAS DUMPING STD MTL CONT IN ST AT FRONT OF TRUCK WAS STUNG BY INSECT RESULTING IN STING TO CHEST.	1	0	26
EMPLOYEE WAS DUMPING WHEELED CART IN ST AT BACK OF TRUCK OVEREXERTED SELF WITH WHEELED CART WHICH WAS UNUSUALLY HEAVY AND WAS UNUSUALLY LARGE RESULTING IN SPRAIN OR STRAIN TO BACK.	1	14	440
EMPLOYEE WAS DUMPING PLASTIC BAG IN ST AT BACK OF TRUCK FELL ON ROCKY GROUND RESULTING IN CUT/PUNCTURE TO CHEEK.	1	8	48
EMPLOYEE WAS DUMPING STD MTL CONT IN ST AT BACK OF TRUCK WAS STRUCK BY TAILGATE RESULTING IN CUT/PUNCTURE TO FOREHEAD.	1	0	22
EMPLOYEE WAS DUMPING PLASTIC CAN IN CUSTOMER'S YD OVEREXERTED SELF WITH PLASTIC CAN WHICH WAS HVY (TIGHTLY PACKED) RESULTING IN SPRAIN OR STRAIN TO BACK.	1	3	186
EMPLOYEE WAS DUMPING STD MTL CONT IN ST AT BACK OF TRUCK GOT WASTE PARTICLES IN EYE RESULTING IN EYE IRRITATION TO EYES.	2	1	133
EMPLOYEE WAS DUMPING STD MTL CONT IN ST AT BACK OF TRUCK WAS STUNG BY INSECT RESULTING IN STING TO EYES.	3	6	434
EMPLOYEE WAS DUMPING STD MTL CONT IN ALLEY AT BACK OF TRUCK WAS CAUGHT BETWEEN CONT & EDGE OF HOPPER RESULTING IN BRUISE TO FINGERS.	1	0	0

EMPLOYEE WAS DUMPING STD MTL CONT IN CUSTOMER'S YD STEPPED ON NAIL RESULTING IN CUT/PUNCTURE TO FOOT.			
EMPLOYEE WAS DUMPING STD MTL CONT IN ALLEY AT BACK OF TRUCK WAS STRUCK BY WASTE HANDLED BY COWORKER RESULTING IN ABRASIONS TO EYES.	1	2	158
EMPLOYEE WAS DUMPING STD MTL CONT IN ST AT BACK OF TRUCK WAS HURT BY HANDLING STD MTL CONT WHICH WAS FULL AND HAD SHARP EDGES RESULTING IN CUT/PUNCTURE TO WRIST.	1	0	0
EMPLOYEE WAS DUMPING STD MTL CONT IN ST AT BACK OF TRUCK OVEREXERTED SELF WITH STD MTL CONT WHICH WAS UNUSUALLY HEAVY RESULTING IN SPRAIN OR STRAIN TO HAND.	1	38	1714
EMPLOYEE WAS DUMPING STD MTL CONT IN ALLEY AT BACK OF TRUCK MADE SUDDEN MOVEMENT IN CATCHING STD MTL CONT WHICH WAS EMPTY AND WAS FALLING RESULTING IN SPRAIN OR STRAIN TO SHOULDER.	1	48	1604
EMPLOYEE WAS DUMPING STD MTL CONT ON STEP OF VEH FELL FROM SLIPPERY STEP OF VEH ONTO PAVEMENT RESULTING IN BRUISE TO BACK.	1	36	1295
EMPLOYEE WAS DUMPING STD MTL CONT IN ST AT BACK OF TRUCK STRUCK AGAINST SIDE OF VEH RESULTING IN BRUISE TO ELBOW.	1	0	54
EMPLOYEE WAS DUMPING STD MTL CONT IN ALLEY AT BACK OF TRUCK WAS CAUGHT BETWEEN CONT & EDGE OF HOPPER RESULTING IN BRUISE TO HAND.	1	17	580
EMPLOYEE WAS DUMPING STD MTL CONT IN ST AT CURB WAS INJURED IN OTHER TYPE OF ACCIDENT RESULTING IN ELECTRIC SHOCK TO LEG.	1	0	24
EMPLOYEE WAS DUMPING STD MTL CONT IN ST AT BACK OF TRUCK OVEREXERTED SELF WITH STD MTL CONT WHICH WAS FULL RESULTING IN SPRAIN OR STRAIN TO SHOULDER.	1	7	43
EMPLOYEE WAS DUMPING STD MTL CONT IN ST AT BACK OF TRUCK WAS CAUGHT BETWEEN CONT & EDGE OF HOPPER RESULTING IN CUT/PUNCTURE TO FINGERS.	1	0	55
EMPLOYEE WAS DUMPING STD MTL CONT IN ST AT BACK OF TRUCK WAS STRUCK BY CONT HANDLED BY COWORKER WHICH WAS FULL RESULTING IN CUT/PUNCTURE TO FINGERS.	1	2	67
EMPLOYEE WAS DUMPING STD MTL CONT IN ST AT BACK OF TRUCK GOT AIRBORNE PARTICLES IN EYE RESULTING IN ABRASIONS TO EYES.	3	6	229
EMPLOYEE WAS DUMPING STD MTL CONT IN ST AT BACK OF TRUCK WAS STRUCK BY GLASS WHICH FELL OUT OF CONT RESULTING IN EYE IRRITATION TO EYES.	1	0	20
EMPLOYEE WAS DUMPING LITTER CAN IN ST AT BACK OF TRUCK WAS CAUGHT BETWEEN CONT & EDGE OF HOPPER (CONT WAS UNUSUALLY HVY) RESULTING IN BRUISE TO HAND.	1	5	177
EMPLOYEE WAS DUMPING STD MTL CONT IN MIDALLEY WAS STRUCK BY COWORKER (UNINTENTIONALLY) RESULTING IN BRUISE TO CHEST.	1	2	86
EMPLOYEE WAS DUMPING STD MTL CONT IN ALLEY AT BACK OF TRUCK STRUCK AGAINST EDGE OF HOPPER RESULTING IN BRUISE TO ELBOW.	1	0	90
EMPLOYEE WAS DUMPING TOTE BARREL IN ST AT BACK OF TRUCK STRUCK AGAINST EDGE OF HOPPER RESULTING IN BRUISE TO MOUTH.	1	0	0
EMPLOYEE WAS DUMPING STD MTL CONT IN ST AT BACK OF TRUCK WAS STRUCK BY VEH RESULTING IN BRUISE TO HIPS.	1	0	0
EMPLOYEE WAS DUMPING STD MTL CONT IN ST AT BACK OF TRUCK MADE SUDDEN MOVEMENT IN CATCHING STD MTL CONT WHICH WAS UNUSUALLY HEAVY AND WAS FALLING RESULTING IN SPRAIN OR STRAIN TO ARM.	1	0	20
EMPLOYEE WAS DUMPING STD MTL CONT IN ST AT BACK OF TRUCK WAS HURT BY HANDLING STD MTL CONT WHICH HAD PROTRUDING WASTE RESULTING IN CUT/PUNCTURE TO WRIST.	1	6	147
EMPLOYEE WAS DUMPING STD MTL CONT IN ST AT BACK OF TRUCK STRUCK AGAINST CONT HANDLED BY COWORKER WHICH WAS FULL RESULTING IN SPRAIN OR STRAIN TO WRIST.	1	9	548
EMPLOYEE WAS DUMPING STD MTL CONT IN ALLEY AT BACK OF TRUCK WAS STRUCK BY ROCKS/CONCRETE/DIRT WHICH FELL OUT OF CONT RESULTING IN CUT/PUNCTURE TO FINGERS.	1	1	139
EMPLOYEE WAS DUMPING OIL DRUM IN CUSTOMER'S YD OVEREXERTED SELF WITH OIL DRUM WHICH WAS UNUSUALLY HEAVY AND WAS UNUSUALLY LARGE RESULTING IN SPRAIN OR STRAIN TO BACK.	1	0	86
EMPLOYEE WAS DUMPING STD MTL CONT IN ST AT BACK OF TRUCK WAS CAUGHT BETWEEN CONT & EDGE OF HOPPER RESULTING IN BRUISE TO WRIST.	1	0	20
EMPLOYEE WAS DUMPING WHEELED CART IN ST AT BACK OF TRUCK WAS STUNG BY INSECT RESULTING IN STING TO WRIST.	1	0	31
EMPLOYEE WAS DUMPING BULK CONT (1-10 YD) IN ALLEY AT BACK OF TRUCK WAS STRUCK BY PARTICLES IN WASTE WHICH WAS EJTD FROM HOPPER RESULTING IN EYE IRRITATION TO EYES.	1	1	16
EMPLOYEE WAS DUMPING STD MTL CONT IN ALLEY AT BACK OF TRUCK OVEREXERTED SELF WITH STD MTL CONT WHICH WAS FULL RESULTING IN SPRAIN OR STRAIN TO SHOULDER.	1	3	143

PROFILE	NO. INJ	DAYS	COSTS
EMPLOYEE WAS DUMPING STD MTL CONT IN ST AT BACK OF TRUCK STRUCK AGAINST EDGE OF HOPPER RESULTING IN BRUISE TO ELBOW.	2	19	1199
EMPLOYEE WAS DUMPING STD MTL CONT AT UNK SITE OVEREXERTED SELF WITH STD MTL CONT WHICH WAS FULL RESULTING IN SPRAIN OR STRAIN TO BACK.	1	13	499
EMPLOYEE WAS DUMPING LITTER CAN IN ST AT BACK OF TRUCK WAS CAUGHT BETWEEN CONT & EDGE OF HOPPER (CONT WAS UNUSUALLY HVY) RESULTING IN FRACTURE TO FINGERS.	1	1	108
EMPLOYEE WAS DUMPING BULK CONT (1-10 YD) IN CUSTOMER'S DRIVEWAY WAS STRUCK BY CABLE RESULTING IN BRUISE TO CHEST.	1	6	314
EMPLOYEE WAS DUMPING STD MTL CONT IN ST AT CURB OVEREXERTED SELF WITH STD MTL CONT WHICH WAS FULL RESULTING IN SPRAIN OR STRAIN TO BACK.	1	7	76
EMPLOYEE WAS DUMPING STD MTL CONT IN ST AT BACK OF TRUCK CONTACTED CAUSTIC OR TOXIC CHEMICAL RESULTING IN EYE IRRITATION TO EYES.	1	0	7
EMPLOYEE WAS DUMPING BULK CONT (11-25 YD) ON STEP OF VEH WAS STRUCK BY STD MTL CONT WHICH WAS EMPTY AND WAS FALLING RESULTING IN BRUISE TO FOOT.	1	0	0
EMPLOYEE WAS DUMPING BULK CONT (1-10 YD) IN ST AT BACK OF TRUCK MADE SUDDEN MOVEMENT IN CATCHING BULK CONTAINER(1-10 YD) WHICH WAS UNUSUALLY HEAVY AND WAS UNUSUALLY LARGE RESULTING IN SPRAIN OR ST	1	8	322
EMPLOYEE WAS DUMPING STD MTL CONT IN CUSTOMER'S YD WAS STUNG BY INSECT RESULTING IN STING TO CHEEK.	1	0	20
EMPLOYEE WAS DUMPING STD MTL CONT IN ST AT BACK OF TRUCK WAS STRUCK BY WOOD RESULTING IN CUT/PUNCTURE TO MOUTH.	1	2	111
EMPLOYEE WAS DUMPING STD MTL CONT IN ST AT BACK OF TRUCK WAS BITTEN BY ANIMAL RESULTING IN CUT/PUNCTURE TO LEG.	2	0	33
EMPLOYEE WAS DUMPING STD MTL CONT IN ALLEY AT BACK OF TRUCK WAS CAUGHT BETWEEN TWO OBJECTS RESULTING IN SPRAIN OR STRAIN TO GROIN.	1	0	72
EMPLOYEE WAS DUMPING STD MTL CONT IN ALLEY AT BACK OF TRUCK WAS STUNG BY INSECT RESULTING IN STING TO ARM.	1	0	39
EMPLOYEE WAS DUMPING PLASTIC BAG IN ST AT CURB WAS STRUCK BY CHEMICAL WHICH FELL OUT OF VEH RESULTING IN ABRASIONS TO EYES.	1	0	36
EMPLOYEE WAS DUMPING STD MTL CONT IN ST AT BACK OF TRUCK WAS HURT BY HANDLING STD MTL CONT WHICH HAD A PROTRUDING HYPODERMIC NEEDLE RESULTING IN CUT/PUNCTURE TO WRIST.	1	0	0
EMPLOYEE WAS DUMPING STD MTL CONT IN ST AT BACK OF TRUCK WAS CAUGHT BETWEEN CONT & EDGE OF HOPPER RESULTING IN BRUISE TO FINGERS.	2	0	57
EMPLOYEE WAS DUMPING PLASTIC BAG IN ST AT BACK OF TRUCK WAS HURT BY HANDLING PLASTIC BAG WHICH HAD PROTRUDING GLASS RESULTING IN CUT/PUNCTURE TO ARM.	1	0	38
EMPLOYEE WAS DUMPING STD MTL CONT IN ST AT CURB WAS STRUCK BY GLASS WHICH FELL OUT OF VEH RESULTING IN CUT/PUNCTURE TO ARM.	1	5	99
EMPLOYEE WAS DUMPING STD MTL CONT IN ST AT BACK OF TRUCK WAS CAUGHT BETWEEN CONT & EDGE OF HOPPER RESULTING IN BRUISE TO THUMB.	1	2	96
EMPLOYEE WAS DUMPING STD MTL CONT IN ST AT BACK OF TRUCK OVEREXERTED SELF WITH STD MTL CONT WHICH WAS FULL RESULTING IN SPRAIN OR STRAIN TO BACK.	3	4	219
EMPLOYEE WAS DUMPING STD MTL CONT IN ALLEY AT BACK OF TRUCK WAS STRUCK BY WOOD RESULTING IN BRUISE TO HAND.	1	8	297
EMPLOYEE WAS DUMPING STD MTL CONT IN ALLEY AT BACK OF TRUCK WAS STUNG BY INSECT RESULTING IN STING TO NECK.	1	0	33
EMPLOYEE WAS DUMPING TOTE BARREL IN ST AT BACK OF TRUCK WAS STRUCK BY CHEMICAL WHICH WAS EJTD FROM HOPPER RESULTING IN CHEMICAL BURN TO EYES.	1	0	0
EMPLOYEE WAS DUMPING STD MTL CONT IN ST AT BACK OF TRUCK WAS STUNG BY INSECT RESULTING IN STING TO HAND.	1	0	0
EMPLOYEE WAS DUMPING STD MTL CONT IN CUSTOMER'S YD OVEREXERTED SELF WITH STD MTL CONT WHICH WAS FULL RESULTING IN SPRAIN OR STRAIN TO SHOULDER.	1	0	72
EMPLOYEE WAS DUMPING STD MTL CONT IN ST AT BACK OF TRUCK WAS STRUCK BY VEH RESULTING IN CUT/PUNCTURE TO ELBOW.	1	2	147
EMPLOYEE WAS DUMPING STD MTL CONT IN ST AT BACK OF TRUCK OVEREXERTED SELF WITH STD MTL CONT WHICH WAS UNUSUALLY HEAVY RESULTING IN SPRAIN OR STRAIN TO BACK.	1	10	545
EMPLOYEE WAS DUMPING STD MTL CONT IN ALLEY AT BACK OF TRUCK OVEREXERTED SELF WITH STD MTL CONT WHICH WAS FULL RESULTING IN SPRAIN OR STRAIN TO BACK.	1	7	382

WHICH WAS FULL RESULTING IN SPRAIN OR STRAIN TO WRIST.	1	5	260
EMPLOYEE WAS DUMPING STD MTL CONT IN CUSTOMER'S DRIVEWAY WAS BITTEN BY ANIMAL RESULTING IN CUT/PUNCTURE TO LEG.	1	1	43
EMPLOYEE WAS DUMPING STD MTL CONT IN ALLEY AT BACK OF TRUCK INJURED SELF WITH STD MTL CONT WHICH WAS FULL AND HAD BOUNCED BACK FROM HOPPER RESULTING IN BRUISE TO GROIN.	1	0	27
EMPLOYEE WAS DUMPING STD MTL CONT IN ALLEY AT BACK OF TRUCK WAS STRUCK BY GLASS WHICH BROKE AGAINST THE VEH RESULTING IN CUT/PUNCTURE TO EYES.	1	0	22
EMPLOYEE WAS DUMPING PLASTIC BAG IN ST AT BACK OF TRUCK WAS STRUCK BY CERAMIC WASTE WHICH FELL OUT OF VEH RESULTING IN CUT/PUNCTURE TO ARM.	1	1	108
EMPLOYEE WAS DUMPING WHEELED CART IN ST AT BACK OF TRUCK OVEREXERTED SELF WITH WHEELED CART WHICH WAS FULL AND WAS UNUSUALLY LARGE RESULTING IN SPRAIN OR STRAIN TO ELBOW.	1	0	20
EMPLOYEE WAS DUMPING STD MTL CONT IN ST AT BACK OF TRUCK WAS CAUGHT BETWEEN CONT & EDGE OF HOPPER (CONT WAS UNUSUALLY HVY) RESULTING IN BRUISE TO HAND.	1	6	289
EMPLOYEE WAS DUMPING STD MTL CONT IN ST AT BACK OF TRUCK STRUCK AGAINST SIDE OF VEH RESULTING IN BRUISE TO HAND.	1	0	0
EMPLOYEE WAS DUMPING STD MTL CONT IN ST AT BACK OF TRUCK WAS STUNG BY INSECT RESULTING IN STING TO FOREHEAD.	1	0	0
EMPLOYEE WAS DUMPING STD MTL CONT IN ST AT BACK OF TRUCK WAS CAUGHT BETWEEN CONT & EDGE OF HOPPER (CONT WAS UNUSUALLY HVY) RESULTING IN BRUISE TO FINGERS.	1	0	12
EMPLOYEE WAS DUMPING PLASTIC BAG IN ST AT BACK OF TRUCK WAS STRUCK BY BOTTLE WHICH WAS EJTD FROM HOPPER RESULTING IN CUT/PUNCTURE TO FOREHEAD.	1	4	372
EMPLOYEE WAS DUMPING STD MTL CONT IN ALLEY AT BACK OF TRUCK WAS STRUCK BY ACID WHICH FELL OUT OF CONT RESULTING IN CHEMICAL BURN TO [illegible]TH.	1	0	0
EMPLOYEE WAS DUMPING STD MTL CONT IN CUSTOMER'S YD INJURED SELF WITH STD MTL CONT WHICH WAS FULL RESULTING IN BRUISE TO TOES.	1	0	0
EMPLOYEE WAS DUMPING WHEELED CART IN ST AT BACK OF TRUCK OVEREXERTED SELF WITH WHEELED CART WHICH WAS FULL AND WAS UNUSUALLY LARGE RESULTING IN SPRAIN OR STRAIN TO SHOULDER.	1	11	562
EMPLOYEE WAS DUMPING CARDBD BOX IN ST AT BACK OF TRUCK WAS STUNG BY INSECT RESULTING IN STING TO ARM.	1	0	50
EMPLOYEE WAS DUMPING STD MTL CONT IN ST AT BACK OF TRUCK WAS STRUCK BY VEH RESULTING IN BRUISE TO MULTIPLE BODY PARTS.	1	6	181
EMPLOYEE WAS DUMPING STD MTL CONT IN ST AT CURB INJURED SELF WITH STD MTL CONT WHICH WAS FULL AND HAD SHARP EDGES RESULTING IN CUT/PUNCTURE TO ARM.	1	0	20
EMPLOYEE WAS DUMPING STD MTL CONT IN ALLEY AT BACK OF TRUCK WAS STUNG BY INSECT RESULTING IN STING TO HAND.	1	0	0
EMPLOYEE WAS DUMPING STD MTL CONT IN ST AT BACK OF TRUCK WAS STRUCK BY STD MTL CONT WHICH WAS EMPTY AND HAD BOUNCED BACK FROM HOPPER RESULTING IN BRUISE TO FINGERS.	1	0	0
EMPLOYEE WAS DUMPING PLASTIC BAG IN ALLEY AT BACK OF TRUCK OVEREXERTED SELF WITH PLASTIC BAG WHICH WAS FULL RESULTING IN SPRAIN OR STRAIN TO SHOULDER.	1	10	662
EMPLOYEE WAS DUMPING STD MTL CONT IN ST AT BACK OF TRUCK WAS STUNG BY INSECT RESULTING IN STING TO ARM.	1	3	284
EMPLOYEE WAS DUMPING PLASTIC CAN IN ST AT BACK OF TRUCK WAS HURT BY HANDLING PLASTIC BAG WHICH HAD PROTRUDING GLASS AND WAS FALLING RESULTING IN CUT/PUNCTURE TO ARM.	1	0	25
EMPLOYEE WAS DUMPING STD MTL CONT IN ST AT BACK OF TRUCK WAS CAUGHT BETWEEN CONT & EDGE OF HOPPER (CONT WAS UNUSUALLY HVY) RESULTING IN SPRAIN OR STRAIN TO FINGERS.	1	0	44
EMPLOYEE WAS DUMPING WHEELED CART IN ST AT BACK OF TRUCK SLIPPED STEPPING ON WET GROUND RESULTING IN HERNIA TO ABDOMEN.	1	2	70
EMPLOYEE WAS DUMPING STD MTL CONT IN CUSTOMER'S YD OVEREXERTED SELF WITH STD MTL CONT WHICH WAS FULL RESULTING IN SPRAIN OR STRAIN TO BACK.	1	2	154
EMPLOYEE WAS DUMPING TOTE BARREL IN ST AT BACK OF TRUCK OVEREXERTED SELF WITH TOTE BARREL WHICH WAS UNUSUALLY HEAVY AND WAS UNUSUALLY LARGE RESULTING IN SPRAIN OR STRAIN TO BACK.	1	10	100
EMPLOYEE WAS DUMPING TOTE BARREL IN ST AT BACK OF TRUCK WAS CAUGHT BETWEEN CONT & EDGE OF HOPPER (CONT WAS HVY-WATER FILLED) RESULTING IN BRUISE TO THUMB.	1	2	154
TOTAL	117	512	23741

FIGURE 1-4

ALL USERS
DETAILED DESCRIPTION OF
DISMOUNTING ACCIDENTS

REPORTING PERIOD: JULY - SEPTEMBER 1976

THIS PROFILE IS A FORMATTED SENTENCE CONSISTING OF ACTIVITY, ACCIDENT TYPE, NATURE OF INJURY AND PART OF BODY.

PROFILE	NO. INJ	DAYS	COSTS
EMPLOYEE WAS GETTING OFF RUNNING BOARD AND HE SLIPPED STEPPING ON SLIPPERY PAVEMENT WHILE STEPPING DOWN RESULTING IN SPRAIN OR STRAIN TO ANKLE.	1	2	151
EMPLOYEE WAS GETTING OFF RUNNING BOARD AND HE MADE SUDDEN MOVEMENT RESULTING IN UNKNOWN TYPE OF INJURY TO LEG.	1	1	16
EMPLOYEE WAS GETTING OFF STEP OF VEH AND HE SLIPPED STEPPING ON WET GROUND WHILE STEPPING DOWN RESULTING IN SPRAIN OR STRAIN TO KNEE.	1	0	0
EMPLOYEE WAS GETTING OFF CAB OF VEH AND HE MADE SUDDEN MOVEMENT RESULTING IN SPRAIN OR STRAIN TO KNEE.	1	8	618
EMPLOYEE WAS GETTING OFF STEP OF VEH AND HE MADE SUDDEN MOVEMENT RESULTING IN SPRAIN OR STRAIN TO ANKLE.	7	29	942
EMPLOYEE WAS GETTING OFF TRUCK BED AND HE SLIPPED WHILE ON TRUCK BED AND STRUCK AGNST SIDE OF VEH RESULTING IN BRUISE TO ARM.	1	0	8
EMPLOYEE WAS GETTING OFF STEP OF VEH AND HE SLIPPED STEPPING ON OBJ ON GROUND WHILE STEPPING DOWN RESULTING IN SPRAIN OR STRAIN TO ANKLE.	2	6	471
EMPLOYEE WAS GETTING OFF RUNNING BOARD AND HE FELL WHILE ON STEP OF VEH AND STRUCK AGNST RUNNING BOARD RESULTING IN SPRAIN OR STRAIN TO WRIST.	1	39	1061
EMPLOYEE WAS GETTING OFF CAB OF VEH AND HE STRUCK AGAINST CAB DOOR RESULTING IN BRUISE TO ELBOW.	1	0	0
EMPLOYEE WAS GETTING OFF STEP OF VEH AND HE SLIPPED STEPPING ON DEPRESSION RESULTING IN SPRAIN OR STRAIN TO ANKLE.	1	0	60
EMPLOYEE WAS GETTING OFF STEP OF VEH AND HE MADE SUDDEN MOVEMENT RESULTING IN SPRAIN OR STRAIN TO INTERNAL ORGANS.	1	0	20
EMPLOYEE WAS GETTING OFF TRUCK BED AND HE FELL FROM TRUCK BED ONTO PAVEMENT RESULTING IN SPRAIN OR STRAIN TO ELBOW.	1	7	96
EMPLOYEE WAS GETTING OFF STEP OF VEH AND HE WAS INJURED IN OTHER TYPE OF ACCIDENT RESULTING IN BURN FROM HEAT TO FOOT.	1	0	44
EMPLOYEE WAS GETTING OFF CAB OF VEH AND HE STRUCK AGAINST CAB DOOR RESULTING IN BRUISE TO KNEE.	1	2	109
EMPLOYEE WAS GETTING OFF STEP OF VEH AND HE SLIPPED STEPPING ON CURB WHILE STEPPING DOWN RESULTING IN SPRAIN OR STRAIN TO ANKLE.	1	0	43
EMPLOYEE WAS GETTING OFF RUNNING BOARD AND HE MADE SUDDEN MOVEMENT RESULTING IN SPRAIN OR STRAIN TO ANKLE.	3	14	238
EMPLOYEE WAS GETTING OFF RUNNING BOARD AND HE FELL WHILE ON RUNNING BOARD AND STRUCK AGNST RUNNING BOARD RESULTING IN BRUISE TO LEG.	1	19	607
EMPLOYEE WAS GETTING OFF RUNNING BOARD AND HE SLIPPED STEPPING ON OBJ ON GROUND WHILE STEPPING DOWN RESULTING IN SPRAIN OR STRAIN TO TRUNK.	1	3	168
EMPLOYEE WAS GETTING OFF TAILGATE AND HE FELL FROM TAILGATE ONTO PAVEMENT RESULTING IN CONCUSSION TO SKULL.	1	1	65
EMPLOYEE WAS GETTING OFF RUNNING BOARD AND HE SLIPPED STEPPING ON OBJ ON GROUND WHILE STEPPING DOWN RESULTING IN SPRAIN OR STRAIN TO ANKLE.	1	1	50
EMPLOYEE WAS GETTING OFF STEP OF VEH AND HE SLIPPED STEPPING ON UNEVEN PAVEMENT WHILE STEPPING DOWN RESULTING IN SPRAIN OR STRAIN TO ANKLE.	1	11	278
EMPLOYEE WAS GETTING OFF RUNNING BOARD AND HE SLIPPED WHILE ON WET RUNNING BOARD AND STRUCK AGNST SIDE OF VEH RESULTING IN BRUISE TO LEG.	1	21	568
EMPLOYEE WAS GETTING OFF RUNNING BOARD AND HE WAS STRUCK BY VEH RESULTING IN BRUISE TO FOOT.	1	23	596
EMPLOYEE WAS GETTING OFF RUNNING BOARD AND HE SLIPPED STEPPING ON DEPRESSION WHILE STEPPING DOWN RESULTING IN SPRAIN OR STRAIN TO ANKLE.	1	0	0

PROFILE	NO. INJ	DAYS	COSTS
EMPLOYEE WAS GETTING OFF STEP OF VEH AND HE STRUCK AGAINST SHARP OBJ RESULTING IN CUT/PUNCTURE TO LEG.	1	0	22
EMPLOYEE WAS GETTING OFF RUNNING BOARD AND HE STEPPED ON BOARD WITH NAIL RESULTING IN CUT/PUNCTURE TO FOOT.	1	0	0
EMPLOYEE WAS GETTING OFF RUNNING BOARD AND HE STEPPED ON NAIL RESULTING IN CUT/PUNCTURE TO FOOT.	2	4	364
EMPLOYEE WAS GETTING OFF STEP OF VEH AND HE FELL FROM STEP OF VEH ONTO CURB RESULTING IN SPRAIN OR STRAIN TO WRIST.	1	0	20
EMPLOYEE WAS GETTING OFF STEP OF VEH AND HE SLIPPED FROM OILY STEP OF VEH ONTO PAVEMENT RESULTING IN SPRAIN OR STRAIN TO NECK.	1	3	39
EMPLOYEE WAS GETTING OFF STEP OF VEH AND HE FELL ON DEPRESSION WHILE STEPPING DOWN RESULTING IN SPRAIN OR STRAIN TO BACK.	1	0	20
EMPLOYEE WAS GETTING OFF RUNNING BOARD AND HE FELL ON WASTE ON GROUND WHILE STEPPING DOWN RESULTING IN BRUISE TO MULTIPLE BODY PARTS.	1	13	715
EMPLOYEE WAS GETTING OFF RUNNING BOARD AND HE MADE SUDDEN MOVEMENT RESULTING IN UNKNOWN TYPE OF INJURY TO FOOT.	1	0	16
EMPLOYEE WAS GETTING OFF RUNNING BOARD AND HE SLIPPED STEPPING ON METER WHILE STEPPING DOWN RESULTING IN SPRAIN OR STRAIN TO ANKLE.	1	5	106
EMPLOYEE WAS GETTING OFF STEP OF VEH AND HE STEPPED ON UNK OBJECT RESULTING IN CUT/PUNCTURE TO FOOT.	1	0	37
EMPLOYEE WAS GETTING OFF RUNNING BOARD AND HE MADE SUDDEN MOVEMENT RESULTING IN SPRAIN OR STRAIN TO BACK.	1	0	0
EMPLOYEE WAS GETTING OFF STEP OF VEH AND HE STEPPED ON PALM FRONDS RESULTING IN CUT/PUNCTURE TO FOOT.	2	1	107
EMPLOYEE WAS GETTING OFF RUNNING BOARD AND HE STRUCK AGAINST SHRUBBERY RESULTING IN ABRASIONS TO EYES.	1	0	53
EMPLOYEE WAS GETTING OFF RUNNING BOARD AND HE SLIPPED STEPPING ON SLIPPERY FLOOR WHILE STEPPING DOWN RESULTING IN SPRAIN OR STRAIN TO BACK.	1	20	655
EMPLOYEE WAS GETTING OFF RUNNING BOARD AND HE MADE SUDDEN MOVEMENT RESULTING IN SPRAIN OR STRAIN TO GROIN.	1	0	22
EMPLOYEE WAS GETTING OFF RUNNING BOARD AND HE WAS CAUGHT IN CAB DOOR RESULTING IN BRUISE TO FINGERS.	1	0	0
EMPLOYEE WAS GETTING OFF STEP OF VEH AND HE MADE SUDDEN MOVEMENT RESULTING IN SPRAIN OR STRAIN TO BACK.	2	2	157
EMPLOYEE WAS GETTING OFF STEP OF VEH AND HE SLIPPED WHILE ON OILY STEP OF VEH AND STRUCK AGNST SIDE OF VEH RESULTING IN BRUISE TO CHEST.	1	0	8
EMPLOYEE WAS GETTING OFF STEP OF VEH AND HE MADE SUDDEN MOVEMENT RESULTING IN SPRAIN OR STRAIN TO MULTIPLE BODY PARTS.	1	0	30
EMPLOYEE WAS GETTING OFF RUNNING BOARD AND HE FELL ON OBJ ON GROUND WHILE STEPPING DOWN RESULTING IN SPRAIN OR STRAIN TO ANKLE.	1	10	366
EMPLOYEE WAS GETTING OFF RUNNING BOARD AND HE FELL WHILE ON STEP OF VEH AND STRK AGNST FENDER RESULTING IN BRUISE TO BACK.	1	17	1272
EMPLOYEE WAS GETTING OFF RUNNING BOARD AND HE SLIPPED FROM RUNNING BOARD ONTO PAVEMENT RESULTING IN SPRAIN OR STRAIN TO BACK.	1	0	20
EMPLOYEE WAS GETTING OFF RUNNING BOARD AND HE SLIPPED STEPPING ON PAVEMENT WHILE STEPPING DOWN RESULTING IN SPRAIN OR STRAIN TO NECK.	1	0	0
EMPLOYEE WAS GETTING OFF STEP OF VEH AND HE SLIPPED STEPPING ON COLLAPSING PAVEMENT WHILE STEPPING DOWN RESULTING IN SPRAIN OR STRAIN TO ANKLE.	1	5	407
EMPLOYEE WAS GETTING OFF STEP OF VEH AND HE MADE SUDDEN MOVEMENT RESULTING IN SPRAIN OR STRAIN TO KNEE.	1	13	246
EMPLOYEE WAS GETTING OFF RUNNING BOARD AND HE STRUCK AGAINST UNK VEH PART RESULTING IN CUT/PUNCTURE TO FINGERS.	1	0	35
EMPLOYEE WAS GETTING OFF CAB OF VEH AND HE STRUCK AGAINST CAB DOOR RESULTING IN UNKNOWN TYPE OF INJURY TO ELBOW.	1	3	447
EMPLOYEE WAS GETTING OFF STEP OF VEH AND HE SLIPPED STEPPING ON SLIPPERY GRAVEL WHILE STEPPING DOWN RESULTING IN SPRAIN OR STRAIN TO ANKLE.	1	0	59
EMPLOYEE WAS GETTING OFF RUNNING BOARD AND HE SLIPPED FROM RUNNING BOARD ONTO PAVEMENT RESULTING IN SPRAIN OR STRAIN TO SHOULDER.	1	0	132
EMPLOYEE WAS GETTING OFF RUNNING BOARD AND HE WAS INJURED WHEN VEH WAS HIT BY ANOTHER VEH RESULTING IN BRUISE TO LEG.	1	27	486
EMPLOYEE WAS GETTING OFF STEP OF VEH AND HE WAS INJURED IN OTHER TYPE OF ACCIDENT RESULTING IN UNKNOWN TYPE OF INJURY TO FOOT.	1	15	66

PROFILE	NO. INJ	DAYS	COSTS
EMPLOYEE WAS GETTING OFF STEP OF VEH AND HE FELL FROM STEP OF VEH ONTO PAVEMENT RESULTING IN SPRAIN OR STRAIN TO WRIST.	1	18	404
EMPLOYEE WAS GETTING OFF STEP OF VEH AND HE STRUCK AGAINST STEP OF VEH RESULTING IN BRUISE TO FOOT.	1	1	48
EMPLOYEE WAS GETTING OFF RUNNING BOARD AND HE FELL FROM RUNNING BOARD ONTO PAVEMENT RESULTING IN SPRAIN OR STRAIN TO ANKLE.	1	2	106
EMPLOYEE WAS GETTING OFF RUNNING BOARD AND HE SLIPPED WHILE ON WET RUNNING BOARD AND STRUCK AGNST BACK OF VEH RESULTING IN CUT/PUNCTURE TO SCALP.	1	1	115
EMPLOYEE WAS GETTING OFF STEP OF VEH AND HE SLIPPED STEPPING ON PAVEMENT WHILE STEPPING DOWN RESULTING IN SPRAIN OR STRAIN TO ANKLE.	1	6	338
EMPLOYEE WAS GETTING OFF RUNNING BOARD AND HE MADE SUDDEN MOVEMENT RESULTING IN SPRAIN OR STRAIN TO FOOT.	1	4	241
EMPLOYEE WAS GETTING OFF STEP OF VEH AND HE SLIPPED STEPPING ON DEPRESSION WHILE STEPPING DOWN RESULTING IN SPRAIN OR STRAIN TO ANKLE.	1	0	16
EMPLOYEE WAS GETTING OFF STEP OF VEH AND HE FELL ON OBJ ON GROUND WHILE STEPPING DOWN RESULTING IN FRACTURE TO ANKLE.	1	20	668
EMPLOYEE WAS GETTING OFF STEP OF VEH AND HE FELL WHILE ON WET STEP OF VEH AND STRUCK AGNST STEP OF VEH RESULTING IN BRUISE TO ANKLE.	1	0	41
EMPLOYEE WAS GETTING OFF STEP OF VEH AND HE STRUCK AGAINST SIDE OF VEH RESULTING IN BRUISE TO KNEE.	1	0	38
EMPLOYEE WAS GETTING OFF STEP OF VEH AND HE SLIPPED STEPPING ON CURB RESULTING IN SPRAIN OR STRAIN TO ANKLE.	1	7	61
EMPLOYEE WAS GETTING OFF STEP OF VEH AND HE FELL ON PAVEMENT WHILE STEPPING DOWN RESULTING IN SPRAIN OR STRAIN TO KNEE.	1	1	65
TOTAL	79	385	14257

USER NO. ALL
DETAILED DESCRIPTION OF
STANDING OR WALKING ACCIDENTS

REPORTING PERIOD: JULY - SEPTEMBER 1976

THIS PROFILE IS A FORMATTED SENTENCE CONSISTING OF ACTIVITY, ACCIDENT SITE, ACCIDENT TYPE, NATURE OF INJURY AND PART OF BODY.

PROFILE	NO. INJ	DAYS	COSTS
EMPLOYEE WAS STANDING OR WALKING IN OFFICE WAS STRUCK BY OTHER OBJECT RESULTING IN BRUISE TO KNEE.	1	0	0
EMPLOYEE WAS STANDING OR WALKING AT HEADQUARTERS SLIPPED FROM WET STAIRS RESULTING IN SPRAIN OR STRAIN TO ANKLE.	1	4	249
EMPLOYEE WAS STANDING OR WALKING IN ST AT CURB STEPPED ON HYPODERMIC NEEDLE RESULTING IN CUT/PUNCTURE TO FOOT.	1	37	5004
EMPLOYEE WAS STANDING OR WALKING IN ST AT CURB WAS BITTEN BY ANIMAL RESULTING IN CUT/PUNCTURE TO ARM.	2	0	36
EMPLOYEE WAS STANDING OR WALKING IN ST AT CURB WAS STRUCK BY WHEELED CART RESULTING IN FRACTURE TO KNEE.	1	8	170
EMPLOYEE WAS STANDING OR WALKING IN ST AT BACK OF TRUCK SLIPPED STEPPING ON DEPRESSION RESULTING IN SPRAIN OR STRAIN TO ANKLE.	1	0	25
EMPLOYEE WAS STANDING OR WALKING IN YARD FELL ON OBJ ON GROUND RESULTING IN SPRAIN OR STRAIN TO ARM.	1	0	0
EMPLOYEE WAS STANDING OR WALKING IN ST AT BACK OF TRUCK FELL ON OBJ ON GROUND RESULTING IN FRACTURE TO SHOULDER.	1	0	178
EMPLOYEE WAS STANDING OR WALKING IN YARD WAS STRUCK BY FURNITURE WHICH FELL OUT OF VEH RESULTING IN SPRAIN OR STRAIN TO BACK.	1	15	867
EMPLOYEE WAS STANDING OR WALKING IN ALLEY AT CURB WAS BITTEN BY ANIMAL RESULTING IN CUT/PUNCTURE TO HIPS.	1	0	37
EMPLOYEE WAS STANDING OR WALKING IN ST AT CURB SLIPPED STEPPING ON DEPRESSION RESULTING IN SPRAIN OR STRAIN TO ANKLE.	3	19	327
EMPLOYEE WAS STANDING OR WALKING IN CUSTOMER'S YD WAS BITTEN BY ANIMAL RESULTING IN CUT/PUNCTURE TO LEG.	3	1	83
EMPLOYEE WAS STANDING OR WALKING IN YARD STRUCK AGAINST BACK OF VEH RESULTING IN BRUISE TO LEG.	1	2	210
EMPLOYEE WAS STANDING OR WALKING NEXT TO VEH AT DUMP SITE STEPPED ON GLASS RESULTING IN CUT/PUNCTURE TO FOOT.	1	24	646
EMPLOYEE WAS STANDING OR WALKING IN MIDSTREET FELL ON SLIPPERY WASTE ON GROUND RESULTING IN SPRAIN OR STRAIN TO ARM.	1	0	20
EMPLOYEE WAS STANDING OR WALKING IN ST AT CURB FELL FROM WET CURB ONTO PAVEMENT RESULTING IN SPRAIN OR STRAIN TO ANKLE.	1	1	92
EMPLOYEE WAS STANDING OR WALKING IN CUSTOMER'S DRIVEWAY GOT WASTE PARTICLES IN EYE RESULTING IN EYE IRRITATION TO EYES.	1	0	0
EMPLOYEE WAS STANDING OR WALKING IN CUSTOMER'S YD STEPPED ON BOARD WITH NAIL RESULTING IN CUT/PUNCTURE TO FOOT.	2	0	52
EMPLOYEE WAS STANDING OR WALKING IN ALLEY AT BACK OF TRUCK STEPPED ON NAIL RESULTING IN CUT/PUNCTURE TO FOOT.	1	12	459
EMPLOYEE WAS STANDING OR WALKING IN CUSTOMER'S DRIVEWAY SLIPPED STEPPING ON OILY PAVEMENT RESULTING IN SPRAIN OR STRAIN TO ANKLE.	1	0	83
EMPLOYEE WAS STANDING OR WALKING IN MIDSTREET STEPPED ON NAIL RESULTING IN CUT/PUNCTURE TO FOOT.	1	4	200
EMPLOYEE WAS STANDING OR WALKING IN ST AT BACK OF TRUCK WAS STRUCK BY GLASS WHICH WAS EJTD FROM HOPPER RESULTING IN CUT/PUNCTURE TO EYES.	1	0	20
EMPLOYEE WAS STANDING OR WALKING IN ST AT BACK OF TRUCK SLIPPED STEPPING ON OBJ ON GROUND RESULTING IN SPRAIN OR STRAIN TO ANKLE.	1	4	238
EMPLOYEE WAS STANDING OR WALKING IN ST AT CURB MADE SUDDEN MOVEMENT RESULTING IN SPRAIN OR STRAIN TO ANKLE.	1	0	0
EMPLOYEE WAS STANDING OR WALKING IN ST AT CURB WAS STRUCK BY GLASS WHICH WAS EJTD FROM HOPPER RESULTING IN CUT/PUNCTURE TO ARM.	1	0	82

PROFILE	NO. INJ	DAYS	COSTS
EMPLOYEE WAS STANDING OR WALKING IN CUSTOMER'S YD WAS BITTEN BY ANIMAL RESULTING IN CUT/PUNCTURE TO ARM.	1	0	27
EMPLOYEE WAS STANDING OR WALKING NEXT TO VEH AT DUMP SITE GOT WASTE PARTICLES IN EYE RESULTING IN EYE IRRITATION TO EYES.	1	0	67
EMPLOYEE WAS STANDING OR WALKING IN ST AT BACK OF TRUCK WAS STRUCK BY PARTICLES IN WASTE WHICH WAS EJTD FROM HOPPER RESULTING IN CHEMICAL BURN TO FACE.	1	1	73
EMPLOYEE WAS STANDING OR WALKING IN MIDSTREET STEPPED ON GLASS RESULTING IN CUT/PUNCTURE TO FOOT.	1	1	46
EMPLOYEE WAS STANDING OR WALKING IN CUSTOMER'S YD FELL FROM GRASS INTO DEPRESSION RESULTING IN BRUISE TO LEG.	1	17	737
EMPLOYEE WAS STANDING OR WALKING IN ST AT BACK OF TRUCK STRUCK AGAINST BACK OF VEH RESULTING IN BRUISE TO CHEST.	1	10	470
EMPLOYEE WAS STANDING OR WALKING IN MIDALLEY STEPPED ON NAIL RESULTING IN CUT/PUNCTURE TO TOES.	1	0	32
EMPLOYEE WAS STANDING OR WALKING ON STEP OF VEH FELL FROM STAIRS RESULTING IN BRUISE TO ANKLE.	1	1	142
EMPLOYEE WAS STANDING OR WALKING IN ST AT BACK OF TRUCK STEPPED ON NAIL RESULTING IN CUT/PUNCTURE TO FOOT.	2	2	129
EMPLOYEE WAS STANDING OR WALKING IN CUSTOMER'S YD WAS BITTEN BY ANIMAL RESULTING IN CUT/PUNCTURE TO KNEE.	1	0	24
EMPLOYEE WAS STANDING OR WALKING IN ST AT BACK OF TRUCK WAS STRUCK BY WOOD WHICH WAS EJTD FROM HOPPER RESULTING IN CUT/PUNCTURE TO FOREHEAD.	2	1	43
EMPLOYEE WAS STANDING OR WALKING IN ALLEY AT CURB STRUCK AGAINST SIDE OF VEH RESULTING IN BRUISE TO CHEST.	1	3	209
EMPLOYEE WAS STANDING OR WALKING IN OFFICE FELL FROM STAIRS RESULTING IN BRUISE TO MULTIPLE BODY PARTS.	1	10	900
EMPLOYEE WAS STANDING OR WALKING IN ST AT BACK OF TRUCK WAS STRUCK BY WASTE HANDLED BY COWORKER WHICH FELL OUT OF CONT RESULTING IN BRUISE TO MOUTH.	1	1	87
EMPLOYEE WAS STANDING OR WALKING IN ALLEY AT CURB WAS STUNG BY INSECT RESULTING IN STING TO LEG.	1	5	453
EMPLOYEE WAS STANDING OR WALKING IN CUSTOMER'S YD STEPPED ON NAIL RESULTING IN CUT/PUNCTURE TO FOOT.	1	0	31
EMPLOYEE WAS STANDING OR WALKING IN ST AT CURB STEPPED ON NAIL RESULTING IN CUT/PUNCTURE TO FOOT.	1	1	64
EMPLOYEE WAS STANDING OR WALKING IN CUSTOMER'S YD STEPPED ON FLUORESCENT BULB RESULTING IN CUT/PUNCTURE TO FOOT.	1	0	0
EMPLOYEE WAS STANDING OR WALKING IN CUSTOMER'S DRIVEWAY STEPPED ON BOARD WITH NAIL RESULTING IN CUT/PUNCTURE TO FOOT.	1	0	0
EMPLOYEE WAS STANDING OR WALKING ON SIDEWALK WAS INJURED FROM AGGRESSIVE ACT RESULTING IN BRUISE TO MULTIPLE BODY PARTS.	1	0	47
EMPLOYEE WAS STANDING OR WALKING IN ALLEY AT BACK OF TRUCK WAS BITTEN BY ANIMAL RESULTING IN CUT/PUNCTURE TO [illegible].	1	0	38
EMPLOYEE WAS STANDING OR WALKING IN YARD STEPPED ON BOARD WITH NAIL RESULTING IN CUT/PUNCTURE TO FOOT.	1	0	0
EMPLOYEE WAS STANDING OR WALKING IN ST AT BACK OF TRUCK STEPPED ON GLASS RESULTING IN CUT/PUNCTURE TO FOOT.	1	4	50
EMPLOYEE WAS STANDING OR WALKING IN CUSTOMER'S DRIVEWAY WAS STRUCK BY CHEMICAL WHICH WAS EJTD FROM HOPPER RESULTING IN CHEMICAL BURN TO EYES.	1	0	0
EMPLOYEE WAS STANDING OR WALKING IN ST AT BACK OF TRUCK WAS STRUCK BY GLASS WHICH WAS EJTD FROM HOPPER RESULTING IN EYE IRRITATION TO EYES.	1	0	33
EMPLOYEE WAS STANDING OR WALKING IN ST AT BACK OF TRUCK WAS HURT BY HANDLING SHRUBBERY RESULTING IN CUT/PUNCTURE TO HAND.	1	0	0
EMPLOYEE WAS STANDING OR WALKING IN ST AT BACK OF TRUCK WAS STRUCK BY GLASS WHICH WAS EJTD FROM HOPPER RESULTING IN CUT/PUNCTURE TO JAW.	1	0	22
EMPLOYEE WAS STANDING OR WALKING IN ST AT BACK OF TRUCK WAS STUNG BY INSECT RESULTING IN STING TO SHOULDER.	1	0	16
EMPLOYEE WAS STANDING OR WALKING IN MIDSTREET WAS STRUCK BY VEH RESULTING IN FRACTURE TO ANKLE.	1	51	1753
EMPLOYEE WAS STANDING OR WALKING IN CUSTOMER'S YD WAS STUNG BY INSECT RESULTING IN STING TO ELBOW.	1	0	21
EMPLOYEE WAS STANDING OR WALKING IN CUSTOMER'S YD WAS BITTEN BY ANIMAL RESULTING IN CUT/PUNCTURE TO MULTIPLE BODY PARTS.	1	6	346
EMPLOYEE WAS STANDING OR WALKING IN YARD SLIPPED WHILE ON COLLAPSING OTHER SURFACE AND STRK AGNST FENCE RESULTING IN BRUISE TO CHEST.	1	0	0

BRUISE TO KNEE.			
EMPLOYEE WAS STANDING OR WALKING IN MIDSTREET STRUCK AGAINST MATTRESS WHICH FELL OUT OF VEH RESULTING IN BRUISE TO KNEE.	1	2	160
EMPLOYEE WAS STANDING OR WALKING ON VEHICLE FELL FROM COLLAPSING TRUCK BED RESULTING IN CUT/PUNCTURE TO LEG.	1	0	46
EMPLOYEE WAS STANDING OR WALKING ON COLLECTION ROUTE SLIPPED STEPPING ON DEPRESSION RESULTING IN SPRAIN OR STRAIN TO ANKLE.	1	2	88
EMPLOYEE WAS STANDING OR WALKING AT DUMP SITE FELL ON OBJ PROTRUDING FROM GRND RESULTING IN FRACTURE TO KNEE.	1	10	542
EMPLOYEE WAS STANDING OR WALKING IN YARD PARKING LOT SLIPPED STEPPING ON OBJ ON GROUND RESULTING IN SPRAIN OR STRAIN TO ANKLE.	1	9	902
EMPLOYEE WAS STANDING OR WALKING IN CUSTOMER'S YD WAS INJURED FROM AGGRESSIVE ACT RESULTING IN SPRAIN OR STRAIN TO LEG.	1	2	20
EMPLOYEE WAS STANDING OR WALKING IN MIDSTREET WAS STRUCK BY VEH RESULTING IN SPRAIN OR STRAIN TO MULTIPLE BODY PARTS.	1	0	20
EMPLOYEE WAS STANDING OR WALKING IN ALLEY AT BACK OF TRUCK STEPPED ON GLASS RESULTING IN CUT/PUNCTURE TO FOOT.	1	0	19
EMPLOYEE WAS STANDING OR WALKING IN SHOP/GARAGE FELL ON OILY FLOOR RESULTING IN UNKNOWN TYPE OF INJURY TO LEG.	1	11	295
EMPLOYEE WAS STANDING OR WALKING IN ST AT BACK OF TRUCK STEPPED ON BOARD WITH NAIL RESULTING IN CUT/PUNCTURE TO FOOT.	1	0	0
EMPLOYEE WAS STANDING OR WALKING NEXT TO VEH WAS STRUCK BY TAILGATE RESULTING IN FRACTURE TO HAND.	1	16	1960
EMPLOYEE WAS STANDING OR WALKING IN YARD STEPPED ON GLASS RESULTING IN CUT/PUNCTURE TO FOOT.	1	1	40
EMPLOYEE WAS STANDING OR WALKING IN CUSTOMER'S YD WAS BITTEN BY ANIMAL RESULTING IN BRUISE TO LEG.	1	0	16
EMPLOYEE WAS STANDING OR WALKING IN CUSTOMER'S YD SLIPPED STEPPING ON WET GROUND RESULTING IN SPRAIN OR STRAIN TO MULTIPLE BODY PARTS.	1	0	0
EMPLOYEE WAS STANDING OR WALKING IN ST AT CURB SLIPPED STEPPING ON OBJ ON GROUND RESULTING IN SPRAIN OR STRAIN TO ANKLE.	1	4	108
TOTAL	81	304	19234

FIGURE 1-6

USER NO. ALL
DETAILED DESCRIPTION OF
LIFTING-TO-DUMP WASTE ACCIDENTS

REPORTING PERIOD: JULY - SEPTEMBER 1976

THIS PROFILE IS A FORMATTED SENTENCE CONSISTING OF ACTIVITY, ACCIDENT SITE, ACCIDENT TYPE, NATURE OF INJURY AND PART OF BODY.

PROFILE	NO. INJ	DAYS	COSTS
EMPLOYEE WAS LIFTING TO DUMP BOARD WITH NAIL IN ALLEY AT BACK OF TRUCK WAS HURT BY HANDLING BOARD WITH NAIL RESULTING IN CUT/PUNCTURE TO HAND.	1	0	35
EMPLOYEE WAS LIFTING TO DUMP PALM FRONDS IN ALLEY AT BACK OF TRUCK WAS HURT BY HANDLING PALM FRONDS RESULTING IN CUT/PUNCTURE TO FINGERS.	1	0	37
EMPLOYEE WAS LIFTING TO DUMP UNBUNDLED SHRUBBERY ON COLLECTION ROUTE STRUCK AGAINST SIDE OF VEH RESULTING IN CUT/PUNCTURE TO LEG.	1	2	138
EMPLOYEE WAS LIFTING TO DUMP UNKNOWN WASTE AT OTHER SITE GOT WASTE PARTICLES IN EYE RESULTING IN EYE IRRITATION TO EYES.	1	1	91
EMPLOYEE WAS LIFTING TO DUMP CERAMIC WASTE IN ST AT BACK OF TRUCK WAS STRUCK BY CERAMIC WASTE WHICH BROKE AGAINST THE VEH RESULTING IN CUT/PUNCTURE TO ARM.	2	5	286
EMPLOYEE WAS LIFTING TO DUMP UNBUNDLED SHRUBBERY IN ST AT CURB GOT WASTE PARTICLES IN EYE RESULTING IN EYE IRRITATION TO EYES.	1	0	19
EMPLOYEE WAS LIFTING TO DUMP WOOD IN ST AT BACK OF TRUCK STEPPED ON NAIL RESULTING IN CUT/PUNCTURE TO FOOT.	1	0	20
EMPLOYEE WAS LIFTING TO DUMP UNKNOWN WASTE IN ALLEY AT BACK OF TRUCK STEPPED ON BOARD WITH NAIL RESULTING IN CUT/PUNCTURE TO FOOT.	1	0	35
EMPLOYEE WAS LIFTING TO DUMP BOARD WITH NAIL IN ST AT BACK OF TRUCK WAS HURT BY HANDLING BOARD WITH NAIL RESULTING IN CUT/PUNCTURE TO HAND.	1	0	28
EMPLOYEE WAS LIFTING TO DUMP WOOD IN ST AT CURB STEPPED ON BOARD WITH NAIL RESULTING IN CUT/PUNCTURE TO FOOT.	1	1	27
EMPLOYEE WAS LIFTING TO DUMP GLASS IN ST AT BACK OF TRUCK WAS HURT BY HANDLING GLASS RESULTING IN CUT/PUNCTURE TO FINGERS.	1	0	32
EMPLOYEE WAS LIFTING TO DUMP FURNITURE IN ALLEY AT BACK OF TRUCK WAS STRUCK BY FURNITURE WHICH FELL OUT OF VEH RESULTING IN ABRASIONS TO LEG.	1	0	35
EMPLOYEE WAS LIFTING TO DUMP UNBUNDLED SHRUBBERY IN ST AT BACK OF TRUCK WAS STRUCK BY UNBUNDLED SHRUBBERY WHICH WAS EJTD FROM HOPPER RESULTING IN ABRASIONS TO EYES.	1	0	20
EMPLOYEE WAS LIFTING TO DUMP WOOD IN ALLEY AT BACK OF TRUCK WAS STRUCK BY WOOD WHICH FELL OUT OF VEH RESULTING IN BRUISE TO FOOT.	1	1	35
EMPLOYEE WAS LIFTING TO DUMP POISON IVY/OAK IN ST AT BACK OF TRUCK CONTACTED ALLERGENIC POISON IVY/OAK RESULTING IN DERMATITIS TO ARM.	1	2	82
EMPLOYEE WAS LIFTING TO DUMP FURNITURE IN ST AT BACK OF TRUCK WAS STRUCK BY PIECE OF METAL WHICH FELL OUT OF VEH RESULTING IN BRUISE TO NECK.	1	0	35
EMPLOYEE WAS LIFTING TO DUMP UNBUNDLED SHRUBBERY IN ALLEY AT BACK OF TRUCK OVEREXERTED SELF WITH UNBUNDLED SHRUBBERY RESULTING IN SPRAIN OR STRAIN TO BACK.	1	1	65
EMPLOYEE WAS LIFTING TO DUMP OTHER WASTE ON TRUCK BED AT DUMP SITE WAS INJURED IN UNK ACCIDENT RESULTING IN BRUISE TO FOOT.	1	14	1278
EMPLOYEE WAS LIFTING TO DUMP UNBUNDLED SHRUBBERY IN ST AT BACK OF TRUCK STEPPED ON NAIL RESULTING IN CUT/PUNCTURE TO FOOT.	1	0	19
EMPLOYEE WAS LIFTING TO DUMP UNBUNDLED SHRUBBERY IN ST AT BACK OF TRUCK CONTACTED ALLERGENIC UNBUNDLED SHRUBBERY RESULTING IN DERMATITIS TO MULTIPLE BODY PARTS.	1	0	12
EMPLOYEE WAS LIFTING TO DUMP WOOD IN ST AT BACK OF TRUCK WAS STRUCK BY WOOD WHICH WAS EJTD FROM HOPPER RESULTING IN BRUISE TO FINGERS.	1	5	20
EMPLOYEE WAS LIFTING TO DUMP WOOD [illegible] NAIL.	[illegible]	[illegible]	[illegible]

PROFILE	NO. INJ	DAYS	COSTS
EMPLOYEE WAS LIFTING TO DUMP FURNITURE IN ST AT BACK OF TRUCK OVEREXERTED SELF WITH FURNITURE RESULTING IN SPRAIN OR STRAIN TO BACK.	2	9	498
EMPLOYEE WAS LIFTING TO DUMP WOOD IN ST AT BACK OF TRUCK WAS HURT BY HANDLING BOARD WITH NAIL RESULTING IN CUT/PUNCTURE TO HAND.	1	0	0
EMPLOYEE WAS LIFTING TO DUMP BOARD WITH NAIL IN ST AT BACK OF TRUCK WAS HURT BY HANDLING BOARD WITH NAIL RESULTING IN CUT/PUNCTURE TO FINGERS.	1	0	0
EMPLOYEE WAS LIFTING TO DUMP PRINTED MATTER IN ST AT BACK OF TRUCK OVEREXERTED SELF WITH PRINTED MATTER RESULTING IN SPRAIN OR STRAIN TO GROIN.	1	11	515
EMPLOYEE WAS LIFTING TO DUMP UNBUNDLED SHRUBBERY IN ST AT BACK OF TRUCK INJURED SELF WITH UNBUNDLED SHRUBBERY RESULTING IN ABRASIONS TO EYES.	1	2	196
EMPLOYEE WAS LIFTING TO DUMP CERAMIC WASTE IN ST AT BACK OF TRUCK WAS STRUCK BY CERAMIC WASTE WHICH BROKE AGAINST THE VEH RESULTING IN CUT/PUNCTURE TO FINGERS.	1	0	20
EMPLOYEE WAS LIFTING TO DUMP PRINTED MATTER IN YARD FELL ON OBJ ON GROUND RESULTING IN BRUISE TO BACK.	1	0	0
EMPLOYEE WAS LIFTING TO DUMP FURNITURE IN ALLEY AT BACK OF TRUCK WAS CAUGHT BETWEEN TWO OBJECTS RESULTING IN BRUISE TO FINGERS.	1	2	136
EMPLOYEE WAS LIFTING TO DUMP APPLIANCE IN ST AT CURB INJURED SELF WITH APPLIANCE RESULTING IN BRUISE TO FOOT.	1	0	0
EMPLOYEE WAS LIFTING TO DUMP UNBUNDLED SHRUBBERY IN ALLEY AT BACK OF TRUCK INJURED SELF WITH UNBUNDLED SHRUBBERY RESULTING IN CUT/PUNCTURE TO EYES.	1	1	52
EMPLOYEE WAS LIFTING TO DUMP WOOD IN YARD OVEREXERTED SELF WITH WOOD RESULTING IN SPRAIN OR STRAIN TO NECK.	1	18	440
EMPLOYEE WAS LIFTING TO DUMP UNBUNDLED SHRUBBERY IN ALLEY AT BACK OF TRUCK WAS STRUCK BY UNBUNDLED SHRUBBERY WHICH WAS SWINGING AROUND IN HOPPER RESULTING IN SPRAIN OR STRAIN TO WRIST.	1	0	89
EMPLOYEE WAS LIFTING TO DUMP FURNITURE IN ALLEY AT BACK OF TRUCK INJURED SELF WITH FURNITURE RESULTING IN BRUISE TO SHOULDER.	1	0	43
EMPLOYEE WAS LIFTING TO DUMP WOOD IN ST AT BACK OF TRUCK OVEREXERTED SELF WITH WOOD RESULTING IN SPRAIN OR STRAIN TO CHEST.	1	0	20
EMPLOYEE WAS LIFTING TO DUMP UNBUNDLED SHRUBBERY IN ALLEY AT BACK OF TRUCK INJURED SELF WITH UNBUNDLED SHRUBBERY RESULTING IN ABRASIONS TO EYES.	1	1	59
EMPLOYEE WAS LIFTING TO DUMP EQUIPMENT PART IN ALLEY AT BACK OF TRUCK OVEREXERTED SELF WITH EQUIPMENT PART RESULTING IN SPRAIN OR STRAIN TO BACK.	1	2	35
EMPLOYEE WAS LIFTING TO DUMP UNBUNDLED SHRUBBERY IN ALLEY AT BACK OF TRUCK WAS STUNG BY INSECT RESULTING IN STING TO BACK.	1	0	0
EMPLOYEE WAS LIFTING TO DUMP BUNDLED SHRUBBERY IN ALLEY AT BACK OF TRUCK OVEREXERTED SELF WITH BUNDLED SHRUBBERY RESULTING IN SPRAIN OR STRAIN TO SHOULDER.	1	38	1229
EMPLOYEE WAS LIFTING TO DUMP FURNITURE IN ST AT BACK OF TRUCK WAS HURT BY HANDLING FURNITURE WHICH FELL OUT OF VEH RESULTING IN CUT/PUNCTURE TO FINGERS.	1	8	16
EMPLOYEE WAS LIFTING TO DUMP BOARD WITH NAIL IN ALLEY AT BACK OF TRUCK WAS HURT BY HANDLING BOARD WITH NAIL RESULTING IN CUT/PUNCTURE TO FINGERS.	1	0	35
EMPLOYEE WAS LIFTING TO DUMP APPLIANCE IN ST AT BACK OF TRUCK FELL ON WET PAVEMENT RESULTING IN FRACTURE TO FOOT.	1	34	3030
EMPLOYEE WAS LIFTING TO DUMP BUNDLED SHRUBBERY IN ST AT CURB WAS HURT BY HANDLING BUNDLED SHRUBBERY RESULTING IN CUT/PUNCTURE TO ARM.	1	0	23
EMPLOYEE WAS LIFTING TO DUMP UNBUNDLED SHRUBBERY IN ST AT BACK OF TRUCK INJURED SELF WITH UNBUNDLED SHRUBBERY RESULTING IN BRUISE TO ANKLE.	1	1	57
EMPLOYEE WAS LIFTING TO DUMP EQUIPMENT PART ON VEHICLE WAS STRUCK BY ACID RESULTING IN CHEMICAL BURN TO EYES.	1	0	60
EMPLOYEE WAS LIFTING TO DUMP RUG IN ALLEY AT BACK OF TRUCK OVEREXERTED SELF WITH RUG RESULTING IN SPRAIN OR STRAIN TO BACK.	2	23	281
EMPLOYEE WAS LIFTING TO DUMP WOOD IN ALLEY AT CURB SLIPPED STEPPING ON PAVEMENT RESULTING IN SPRAIN OR STRAIN TO SHOULDER.	1	0	0
EMPLOYEE WAS LIFTING TO DUMP BUNDLED SHRUBBERY IN ST AT BACK OF TRUCK INJURED SELF WITH BUNDLED SHRUBBERY RESULTING IN ABRASIONS TO ARM.	1	0	0
EMPLOYEE WAS LIFTING TO DUMP UNKNOWN WASTE IN ST AT CURB SLIPPED STEPPING ON PAVEMENT RESULTING IN SPRAIN OR STRAIN TO ANKLE.	1	3	74

PROFILE	NO. INJ	DAYS	COSTS
EMPLOYEE WAS LIFTING TO DUMP GLASS IN CUSTOMER'S DRIVEWAY WAS HURT BY HANDLING GLASS RESULTING IN CUT/PUNCTURE TO HAND.	1	0	16
EMPLOYEE WAS LIFTING TO DUMP WOOD IN ST AT BACK OF TRUCK STEPPED ON BOARD WITH NAIL RESULTING IN CUT/PUNCTURE TO FOOT.	1	0	32
EMPLOYEE WAS LIFTING TO DUMP UNBUNDLED SHRUBBERY IN ALLEY AT BACK OF TRUCK INJURED SELF WITH UNBUNDLED SHRUBBERY RESULTING IN BRUISE TO KNEE.	1	0	32
EMPLOYEE WAS LIFTING TO DUMP PALM FRONDS IN ST AT BACK OF TRUCK WAS HURT BY HANDLING PALM FRONDS RESULTING IN CUT/PUNCTURE TO WRIST.	1	0	20
EMPLOYEE WAS LIFTING TO DUMP UNBUNDLED SHRUBBERY IN ST AT BACK OF TRUCK WAS STRUCK BY UNBUNDLED SHRUBBERY WHICH FELL OUT OF VEH RESULTING IN CUT/PUNCTURE TO KNEE.	1	0	69
EMPLOYEE WAS LIFTING TO DUMP CERAMIC WASTE IN ST AT BACK OF TRUCK WAS HURT BY HANDLING CERAMIC WASTE RESULTING IN CUT/PUNCTURE TO HAND.	1	0	35
EMPLOYEE WAS LIFTING TO DUMP BUNDLED SHRUBBERY IN ST AT BACK OF TRUCK OVEREXERTED SELF WITH UNBUNDLED SHRUBBERY RESULTING IN SPRAIN OR STRAIN TO BACK.	1	0	40
EMPLOYEE WAS LIFTING TO DUMP PALM FRONDS IN ST AT BACK OF TRUCK INJURED SELF WITH PALM FRONDS RESULTING IN CUT/PUNCTURE TO LEG.	1	0	6
TOTAL	61	185	9527

FIGURE 1-7

ALL USERS
DETAILED DESCRIPTION OF
RIDING ACCIDENTS

REPORTING PERIOD: JULY - SEPTEMBER 1976

THIS PROFILE IS A FORMATTED SENTENCE CONSISTING OF ACTIVITY, ACCIDENT TYPE, NATURE OF INJURY AND PART OF BODY.

PROFILE	NO. INJ	DAYS	COSTS
EMPLOYEE WAS RIDING ON CAB OF VEH AND HE GOT WASTE PARTICLES IN EYE RESULTING IN EYE IRRITATION TO EYES.	1	0	35
EMPLOYEE WAS RIDING ON CAB OF VEH AND HE WAS INJURED WHEN VEH WAS HIT BY ANOTHER VEH RESULTING IN SPRAIN OR STRAIN TO NECK.	2	7	312
EMPLOYEE WAS RIDING ON TRUCK BED AND HE WAS STRUCK BY APPLIANCE RESULTING IN CUT/PUNCTURE TO LEG.	1	0	49
EMPLOYEE WAS RIDING ON RUNNING BOARD AND HE FELL FROM RUNNING BOARD ONTO GROUND RESULTING IN FRACTURE TO MULTIPLE BODY PARTS.	1	72	3970
EMPLOYEE WAS RIDING ON STEP OF VEH AND HE FELL WHILE ON COLLAPSING GROUND AND STRUCK AGNST BACK OF VEH RESULTING IN BRUISE TO SHOULDER.	1	8	218
EMPLOYEE WAS RIDING ON STEP OF VEH AND HE WAS INJURED WHEN VEH WENT OVER A BUMP OR DEPRESSION RESULTING IN BRUISE TO BACK.	1	19	633
EMPLOYEE WAS RIDING ON STEP OF VEH AND HE WAS STRUCK BY SHRUBBERY RESULTING IN CUT/PUNCTURE TO FACE.	1	0	0
EMPLOYEE WAS RIDING ON RUNNING BOARD AND HE WAS STRUCK BY VEH RESULTING IN UNKNOWN TYPE OF INJURY TO LEG.	2	0	70
EMPLOYEE WAS RIDING ON STEP OF VEH AND HE FELL FROM STEP OF VEH ONTO PAVEMENT RESULTING IN BRUISE TO MULTIPLE BODY PARTS.	1	0	84
EMPLOYEE WAS RIDING ON CAB OF VEH AND HE WAS INJURED WHEN VEH BECAME OUT OF CONTROL RESULTING IN BRUISE TO BACK.	1	35	2008
EMPLOYEE WAS RIDING ON STEP OF VEH AND HE WAS INJURED WHEN VEH WENT OVER A BUMP OR DEPRESSION RESULTING IN BRUISE TO MULTIPLE BODY PARTS.	2	7	464
EMPLOYEE WAS RIDING ON RUNNING BOARD AND HE WAS INJURED WAS INJURED WHEN VEH WAS HIT BY ANOTHER VEH RESULTING IN BRUISE TO KNEE.	1	0	78
EMPLOYEE WAS RIDING ON RUNNING BOARD AND HE WAS STRUCK BY SHRUBBERY RESULTING IN BRUISE TO SHOULDER.	1	1	71
EMPLOYEE WAS RIDING ON RUNNING BOARD AND HE GOT AIRBORNE PARTICLES IN EYE RESULTING IN OTHER TYPE OF INJURY TO EARS.	1	0	35
EMPLOYEE WAS RIDING ON STEP OF VEH AND HE WAS STRUCK BY SHRUBBERY RESULTING IN BRUISE TO FACE.	1	0	47
EMPLOYEE WAS RIDING ON RUNNING BOARD AND HE WAS STRUCK BY VEH RESULTING IN BRUISE TO SHOULDER.	1	1	69
EMPLOYEE WAS RIDING ON STEP OF VEH AND HE SLIPPED WHILE ON STEP OF VEH AND STRUCK AGNST BACK OF VEH RESULTING IN BRUISE TO MULTIPLE BODY PARTS.	1	0	0
EMPLOYEE WAS RIDING ON STEP OF VEH AND HE WAS INJURED WHEN VEH WENT OVER A BUMP OR DEPRESSION RESULTING IN SPRAIN OR STRAIN TO FOOT.	1	6	100
EMPLOYEE WAS RIDING ON STEP OF VEH AND HE WAS INJURED WHEN VEH MADE SUDDEN STOP RESULTING IN BRUISE TO MULTIPLE BODY PARTS.	1	0	10
EMPLOYEE WAS RIDING ON STEP OF VEH AND HE WAS INJURED WHEN VEH WENT OVER ROUGH TERRAIN RESULTING IN CUT/PUNCTURE TO KNEE.	1	0	15
EMPLOYEE WAS RIDING ON STEP OF VEH AND HE WAS INJURED WHEN VEH WENT OVER ROUGH TERRAIN RESULTING IN CUT/PUNCTURE TO HAND.	1	6	184
EMPLOYEE WAS RIDING ON STEP OF VEH AND HE WAS CAUGHT BETWEEN MOVING VEH AND OBJ RESULTING IN BRUISE TO SHOULDER.	1	0	20
EMPLOYEE WAS RIDING ON STEP OF VEH AND HE STRUCK AGAINST BACK OF VEH RESULTING IN BRUISE TO FOOT.	1	7	474
EMPLOYEE WAS RIDING ON STEP OF VEH AND HE WAS CAUGHT BETWEEN MOVING VEH AND OBJ RESULTING IN BRUISE TO HIPS.	1	0	9
EMPLOYEE WAS RIDING ON STEP OF VEH AND HE WAS CAUGHT IN PACKER BLADE RESULTING IN CUT/PUNCTURE TO FOOT.	1	29	1605
EMPLOYEE WAS RIDING ON CAB OF VEH AND HE WAS STUNG BY INSECT RESULTING IN POISONING OR ALLERGIC REACTION TO KNEE.	1	3	100

PROFILE	NO. INJ	DAYS	COSTS
EMPLOYEE WAS RIDING ON RUNNING BOARD AND HE CONTACTED HOT EXHAUST PIPE RESULTING IN BURN FROM HEAT TO ARM.	1	0	55
EMPLOYEE WAS RIDING ON STEP OF VEH AND HE FELL FROM STEP OF VEH ONTO PAVEMENT RESULTING IN BRUISE TO HAND.	1	54	1296
EMPLOYEE WAS RIDING ON STEP OF VEH AND HE WAS INJURED WHEN VEH WAS HIT BY ANOTHER VEH RESULTING IN MULTIPLE INJURIES TO MULTIPLE BODY PARTS.	1	35	3859
EMPLOYEE WAS RIDING ON STEP OF VEH AND HE WAS INJURED WHEN VEH MADE SUDDEN TURN RESULTING IN FRACTURE TO FOOT.	1	0	50
EMPLOYEE WAS RIDING ON STEP OF VEH AND HE FELL FROM STEP OF VEH ONTO PAVEMENT RESULTING IN BRUISE TO LEG.	1	0	9
EMPLOYEE WAS RIDING ON STEP OF VEH AND HE WAS INJURED WHEN VEH JERKED SUDDENLY RESULTING IN SPRAIN OR STRAIN TO WRIST.	1	20	1038
EMPLOYEE WAS RIDING ON STEP OF VEH AND HE FELL FROM WET STEP OF VEH ONTO PAVEMENT RESULTING IN CUT/PUNCTURE TO HAND.	1	34	2269
EMPLOYEE WAS RIDING ON STEP OF VEH AND HE STRUCK AGAINST BACK OF VEH RESULTING IN CUT/PUNCTURE TO SCALP.	1	0	25
EMPLOYEE WAS RIDING ON STEP OF VEH AND HE WAS STRUCK BY SHRUBBERY RESULTING IN CUT/PUNCTURE TO EYES.	1	0	2
EMPLOYEE WAS RIDING ON CAB OF VEH AND HE WAS INJURED WHEN VEH COLLIDED WITH OBJ RESULTING IN CUT/PUNCTURE TO FOREHEAD.	1	1	35
EMPLOYEE WAS RIDING ON CAB OF VEH AND HE WAS INJURED WHEN VEH MADE SUDDEN TURN RESULTING IN BRUISE TO SKULL.	1	16	665
EMPLOYEE WAS RIDING ON STEP OF VEH AND HE GOT AIRBORNE PARTICLES IN EYE RESULTING IN EYE IRRITATION TO EYES.	1	3	42
EMPLOYEE WAS RIDING ON STEP OF VEH AND HE WAS STRUCK BY SHRUBBERY RESULTING IN EYE IRRITATION TO EYES.	1	0	33
EMPLOYEE WAS RIDING ON STEP OF VEH AND HE WAS STRUCK BY SHRUBBERY RESULTING IN BRUISE TO HAND.	1	0	20
EMPLOYEE WAS RIDING ON STEP OF VEH AND HE WAS INJURED WHEN VEH MADE SUDDEN STOP RESULTING IN BRUISE TO BACK.	1	2	140
EMPLOYEE WAS RIDING ON STEP OF VEH AND HE WAS INJURED WHEN VEH MADE SUDDEN STOP RESULTING IN OTHER TYPE OF INJURY TO BACK.	1	51	2992
EMPLOYEE WAS RIDING ON STEP OF VEH AND HE WAS INJURED WHEN VEH MADE SUDDEN STOP RESULTING IN FRACTURE TO CHEST.	1	7	110
EMPLOYEE WAS RIDING ON CAB OF VEH AND HE WAS INJURED WHEN VEH HIT ANOTHER VEH RESULTING IN BRUISE TO MULTIPLE BODY PARTS.	1	2	177
EMPLOYEE WAS RIDING ON CAB OF VEH AND HE WAS INJURED WHEN VEH HIT ANOTHER VEH RESULTING IN BRUISE TO LEG.	1	2	152
EMPLOYEE WAS RIDING ON RUNNING BOARD AND HE WAS INJURED WHEN VEH HIT CURBING RESULTING IN BRUISE TO LEG.	1	1	72
EMPLOYEE WAS RIDING ON STEP OF VEH AND HE WAS INJURED WHEN VEH COLLIDED WITH OBJ RESULTING IN BRUISE TO NECK.	1	1	130
EMPLOYEE WAS RIDING ON STEP OF VEH AND HE WAS INJURED WHEN VEH WAS HIT BY ANOTHER VEH RESULTING IN BRUISE TO LEG.	1	4	159
EMPLOYEE WAS RIDING ON TRUCK BED AND HE WAS STUNG BY INSECT RESULTING IN STING TO EYES.	1	0	40
EMPLOYEE WAS RIDING ON STEP OF VEH AND HE WAS INJURED WHEN VEH MADE SUDDEN STOP RESULTING IN BRUISE TO LEG.	1	3	45
TOTAL	53	437	24075

FIGURE 1-8
ALL USERS
DETAILED DESCRIPTION OF
MOUNTING ACCIDENT

REPORTING PERIOD: JULY - SEPTEMBER 1976

THIS PROFILE IS A FORMATTED SENTENCE CONSISTING OF ACTIVITY, ACCIDENT TYPE, NATURE OF INJURY AND PART OF BODY.

PROFILE	NO. INJ	DAYS	COSTS
EMPLOYEE WAS GETTING ON RUNNING BOARD AND HE SLIPPED WHILE ON RUNNING BOARD AND STRUCK AGNST SIDE OF VEH RESULTING IN MULTIPLE INJURIES TO MULTIPLE BODY PARTS.	1	0	20
EMPLOYEE WAS GETTING ON STEP OF VEH AND HE FELL FROM OILY STEP OF VEH ONTO PAVEMENT RESULTING IN SPRAIN OR STRAIN TO HIPS.	1	7	30
EMPLOYEE WAS GETTING ON CAB OF VEH AND HE STRUCK AGAINST INSIDE OF CAB RESULTING IN CUT/PUNCTURE TO KNEE.	1	0	42
EMPLOYEE WAS GETTING ON CAB OF VEH AND HE WAS STRUCK BY CAB DOOR RESULTING IN BRUISE TO FINGERS.	1	0	0
EMPLOYEE WAS GETTING ON STEP OF VEH AND HE STRUCK AGAINST STEP OF VEH RESULTING IN BRUISE TO TOES.	2	7	195
EMPLOYEE WAS GETTING ON RUNNING BOARD AND HE STRUCK AGAINST OTHER VEH PART RESULTING IN BRUISE TO WRIST.	1	0	51
EMPLOYEE WAS GETTING ON RUNNING BOARD AND HE SLIPPED WHILE ON WET RUNNING BOARD AND STRUCK AGNST SIDE OF VEH RESULTING IN BRUISE TO KNEE.	1	0	63
EMPLOYEE WAS GETTING ON STEP OF VEH AND HE SLIPPED WHILE ON STEP OF VEH AND STRUCK AGNST STEP OF VEH RESULTING IN CUT/PUNCTURE TO LEG.	1	0	0
EMPLOYEE WAS GETTING ON STEP OF VEH AND HE WAS INJURED WHEN VEH MADE SUDDEN STOP RESULTING IN BRUISE TO KNEE.	1	19	615
EMPLOYEE WAS GETTING ON STEP OF VEH AND HE STRUCK AGAINST BACK OF VEH RESULTING IN CUT/PUNCTURE TO KNEE.	1	5	211
EMPLOYEE WAS GETTING ON CAB OF VEH AND HE WAS CAUGHT BETWEEN TWO OBJECTS RESULTING IN SPRAIN OR STRAIN TO BACK.	1	15	611
EMPLOYEE WAS GETTING ON RUNNING BOARD AND HE FELL WHILE ON RUNNING BOARD AND STRUCK AGNST SIDE OF VEH RESULTING IN CUT/PUNCTURE TO HAND.	1	6	216
EMPLOYEE WAS GETTING ON RUNNING BOARD AND HE STRUCK AGAINST CAB DOOR RESULTING IN BRUISE TO KNEE.	1	1	20
EMPLOYEE WAS GETTING ON STEP OF VEH AND HE STRUCK AGAINST BACK OF VEH RESULTING IN BRUISE TO GROIN.	1	6	121
EMPLOYEE WAS GETTING ON RUNNING BOARD AND HE STRUCK AGAINST RUNNING BOARD RESULTING IN BRUISE TO KNEE.	1	0	35
EMPLOYEE WAS GETTING ON RUNNING BOARD AND HE FELL FROM RUNNING BOARD ONTO PAVEMENT RESULTING IN SPRAIN OR STRAIN TO KNEE.	1	15	830
EMPLOYEE WAS GETTING ON VEHICLE AND HE SLIPPED WHILE ON SLIPPERY VEHICLE AND STRK AGNST OTHER VEH PART RESULTING IN CUT/PUNCTURE TO FINGERS.	1	0	20
EMPLOYEE WAS GETTING ON STEP OF VEH AND HE FELL FROM STEP OF VEH ONTO PAVEMENT RESULTING IN SPRAIN OR STRAIN TO NECK.	1	0	0
EMPLOYEE WAS GETTING ON STEP OF VEH AND HE MADE SUDDEN MOVEMENT RESULTING IN SPRAIN OR STRAIN TO LEG.	1	5	328
EMPLOYEE WAS GETTING ON CAB OF VEH AND HE WAS CAUGHT IN CAB DOOR RESULTING IN SPRAIN OR STRAIN TO KNEE.	1	4	372
EMPLOYEE WAS GETTING ON RUNNING BOARD AND HE STRUCK AGAINST RUNNING BOARD RESULTING IN BRUISE TO ANKLE.	1	0	20
EMPLOYEE WAS GETTING ON RUNNING BOARD AND HE STRUCK AGAINST SIDE OF VEH RESULTING IN BRUISE TO LEG.	1	1	35
EMPLOYEE WAS GETTING ON VEHICLE AND HE MADE SUDDEN MOVEMENT RESULTING IN SPRAIN OR STRAIN TO HIPS.	1	0	0
EMPLOYEE WAS GETTING ON STEP OF VEH AND HE FELL WHILE ON SLIPPERY STEP OF VEH AND STRUCK AGNST BACK OF VEH RESULTING IN BRUISE TO BACK.	1	3	254
EMPLOYEE WAS GETTING ON RUNNING BOARD AND HE STRUCK AGAINST HANDLE ON VEH RESULTING IN FRACTURE TO THUMB.	1	16	645
EMPLOYEE WAS GETTING ON STEP OF VEH AND HE STRUCK AGAINST HANDLE ON VEH RESULTING IN BRUISE TO CHEST.	1	0	55
EMPLOYEE WAS GETTING ON TRUCK BED AND HE FELL FROM TRUCK BED ONTO GROUND RESULTING IN SPRAIN OR STRAIN TO BACK.	1	2	124
EMPLOYEE WAS GETTING ON STEP OF VEH AND HE SLIPPED FROM WET STEP OF VEH ONTO PAVEMENT RESULTING IN FRACTURE TO ANKLE.	1	12	450

PROFILE	NO. INJ	DAYS	COSTS
EMPLOYEE WAS GETTING ON RUNNING BOARD AND HE FELL WHILE ON WET RUNNING BOARD AND STRUCK AGNST SIDE OF VEH RESULTING IN BRUISE TO BACK.	1	2	159
EMPLOYEE WAS GETTING ON STEP OF VEH AND HE FELL FROM WET STEP OF VEH ONTO PAVEMENT RESULTING IN BRUISE TO KNEE.	1	0	20
EMPLOYEE WAS GETTING ON RUNNING BOARD AND HE SLIPPED WHILE ON RUNNING BOARD AND STRUCK AGNST RUNNING BOARD RESULTING IN INFLAMMATION OF THE JOINTS TO KNEE.	1	4	120
EMPLOYEE WAS GETTING ON STEP OF VEH AND HE WAS CAUGHT BETWEEN MOVING VEH AND OBJ RESULTING IN UNKNOWN TYPE OF INJURY TO FOOT.	1	50	1270
EMPLOYEE WAS GETTING ON RUNNING BOARD AND HE SLIPPED WHILE ON OILY RUNNING BOARD AND STRUCK AGNST SIDE OF VEH RESULTING IN BRUISE TO KNEE.	1	0	16
EMPLOYEE WAS GETTING ON RUNNING BOARD AND HE STRUCK AGAINST CAB DOOR RESULTING IN SPRAIN OR STRAIN TO HAND.	1	19	1692
EMPLOYEE WAS GETTING ON RUNNING BOARD AND HE SLIPPED WHILE ON WET RUNNING BOARD AND STRUCK AGNST SIDE OF VEH RESULTING IN BRUISE TO BACK.	1	16	839
TOTAL	36	215	9479

FIGURE 1-9

ALL USERS
DETAILED DESCRIPTION OF
DRIVING ACCIDENTS

REPORTING PERIOD: JULY - SEPTEMBER 1976

THIS PROFILE IS A FORMATTED SENTENCE CONSISTING OF ACTIVITY, ACCIDENT TYPE, NATURE OF INJURY AND PART OF BODY.

PROFILE	NO. INJ	DAYS	COSTS
EMPLOYEE WAS DRIVING AND HE WAS CAUGHT IN STEERING WHEEL RESULTING IN SPRAIN OR STRAIN TO HAND.	1	0	0
EMPLOYEE WAS DRIVING AND HE OVEREXERTED SELF WITH ACCELERATOR PEDAL RESULTING IN SPRAIN OR STRAIN TO ANKLE.	1	6	235
EMPLOYEE WAS DRIVING CAB OF VEH AND HE WAS STRUCK BY OBJ THROWN UP BY MOVING EQUIP RESULTING IN CUT/PUNCTURE TO HAND.	1	0	20
EMPLOYEE WAS DRIVING AND HE WAS STUNG BY INSECT RESULTING IN STING TO ARM.	1	0	20
EMPLOYEE WAS DRIVING CAB OF VEH AND HE WAS INJURED WHEN VEH BECAME OUT OF CONTROL RESULTING IN BRUISE TO LEG.	1	17	1454
EMPLOYEE WAS DRIVING CAB OF VEH AND HE GOT AIRBORNE PARTICLES IN EYE RESULTING IN ABRASIONS TO EYES.	1	0	22
EMPLOYEE WAS DRIVING CAB OF VEH AND HE GOT AIRBORNE PARTICLES IN EYE RESULTING IN EYE IRRITATION TO EYES.	1	0	22
EMPLOYEE WAS DRIVING CAB OF VEH AND HE WAS STUNG BY INSECT RESULTING IN STING TO WRIST.	1	4	144
EMPLOYEE WAS DRIVING CAB OF VEH AND HE GOT AIRBORNE PARTICLES IN EYE RESULTING IN BURN FROM HEAT TO EYES.	1	1	65
EMPLOYEE WAS DRIVING AND HE WAS STRUCK BY STEERING WHEEL RESULTING IN BRUISE TO FINGERS.	1	0	39
EMPLOYEE WAS DRIVING AND HE WAS INJURED WHEN VEH COLLIDED WITH OBJ RESULTING IN SPRAIN OR STRAIN TO NECK.	1	2	98
EMPLOYEE WAS DRIVING AND HE WAS INJURED WHEN VEH HIT CURBING RESULTING IN BRUISE TO MULTIPLE BODY PARTS.	1	0	0
EMPLOYEE WAS DRIVING AND HE WAS INJURED WHEN VEH HIT CURBING RESULTING IN BRUISE TO ELBOW.	1	0	0
EMPLOYEE WAS DRIVING AND HE WAS INJURED WHEN VEH WENT OVER ROUGH TERRAIN RESULTING IN SPRAIN OR STRAIN TO GROIN.	1	4	372
EMPLOYEE WAS DRIVING CAB OF VEH AND HE WAS INJURED WHEN VEH COLLIDED WITH OBJ RESULTING IN BRUISE TO SHOULDER.	1	2	137
EMPLOYEE WAS DRIVING AND HE WAS STUNG BY INSECT RESULTING IN STING TO EARS.	1	0	24
EMPLOYEE WAS DRIVING AND HE WAS INJURED WHEN VEH OVERTURNED RESULTING IN BRUISE TO MULTIPLE BODY PARTS.	1	15	2379
EMPLOYEE WAS DRIVING AND HE STRUCK AGAINST INSIDE OF CAB RESULTING IN BRUISE TO ELBOW.	1	0	0
EMPLOYEE WAS DRIVING AND HE WAS STRUCK BY OBJ THROWN UP BY MOVING EQUIP RESULTING IN BRUISE TO LEG.	1	0	0
EMPLOYEE WAS DRIVING AND HE WAS STRUCK BY OBJ THROWN UP BY MOVING EQUIP RESULTING IN CUT/PUNCTURE TO ARM.	1	0	0
EMPLOYEE WAS DRIVING AND HE WAS INJURED WHEN VEH OVERTURNED RESULTING IN MULTIPLE INJURIES TO MULTIPLE BODY PARTS.	1	8	316
EMPLOYEE WAS DRIVING AND HE WAS INJURED WHEN VEH MADE SUDDEN STOP RESULTING IN SPRAIN OR STRAIN TO NECK.	1	4	259
EMPLOYEE WAS DRIVING CAB OF VEH AND HE WAS INJURED WHEN VEH WAS HIT BY ANOTHER VEH RESULTING IN SPRAIN OR STRAIN TO NECK.	1	12	436
EMPLOYEE WAS DRIVING CAB OF VEH AND HE WAS INJURED WHEN VEH HIT ANOTHER VEH RESULTING IN SPRAIN OR STRAIN TO BACK.	1	0	75
EMPLOYEE WAS DRIVING CAB OF VEH AND HE WAS INJURED WHEN VEH WAS HIT BY ANOTHER VEH RESULTING IN BRUISE TO ELBOW.	1	8	315
EMPLOYEE WAS DRIVING AND HE WAS INJURED WHEN VEH WAS HIT BY ANOTHER VEH RESULTING IN BRUISE TO HIPS.	1	4	24
EMPLOYEE WAS DRIVING AND HE WAS INJURED WHEN VEH WAS HIT BY ANOTHER VEH RESULTING IN MULTIPLE INJURIES TO MULTIPLE BODY PARTS.	1	0	20
TOTAL	27	87	6476

FIGURE 1-10

ALL USERS
DETAILED DESCRIPTION OF
OPERATING CONTROLS ACCIDENTS

REPORTING PERIOD: JULY - SEPTEMBER 1976

THIS PROFILE IS A FORMATTED SENTENCE CONSISTING OF ACTIVITY, ACCIDENT TYPE, NATURE OF INJURY AND PART OF BODY.

PROFILE	NO. INJ	DAYS	COSTS
EMPLOYEE WAS OPERATING PACKING MECH LEVER AND HE WAS STRUCK BY PARTICLES IN WASTE WHICH WAS EJTD FROM HOPPER RESULTING IN EYE IRRITATION TO EYES.	3	1	141
EMPLOYEE WAS OPERATING BOOM CONTROLS AND HE WAS STRUCK BY UNBUNDLED SHRUBBERY RESULTING IN DERMATITIS TO EYES.	1	0	15
EMPLOYEE WAS OPERATING PACKING MECH LEVER AND HE WAS CAUGHT IN PACKER BLADE RESULTING IN BRUISE TO FINGERS.	1	6	289
EMPLOYEE WAS OPERATING PACKING MECH LEVER AND HE WAS STRUCK BY TAILGATE RESULTING IN BRUISE TO ELBOW.	1	3	320
EMPLOYEE WAS OPERATING PACKING MECH LEVER AND HE WAS STRUCK BY UNKNOWN WASTE WHICH WAS EJTD FROM HOPPER RESULTING IN EYE IRRITATION TO EYES.	1	0	44
EMPLOYEE WAS OPERATING PACKING MECH LEVER AND HE WAS STRUCK BY SHARP OBJ WHICH WAS EJTD FROM HOPPER RESULTING IN CUT/PUNCTURE TO MULTIPLE BODY PARTS.	1	0	22
EMPLOYEE WAS OPERATING PACKING MECH LEVER AND HE WAS STRUCK BY GLASS WHICH WAS EJTD FROM HOPPER RESULTING IN CUT/PUNCTURE TO FOREHEAD.	1	2	117
EMPLOYEE WAS OPERATING PACKING MECH LEVER AND HE WAS STRUCK BY CHEMICAL WHICH WAS EJTD FROM HOPPER RESULTING IN UNKNOWN TYPE OF INJURY TO EARS.	1	0	16
EMPLOYEE WAS OPERATING PACKING MECH LEVER AND HE GOT AIRBORNE PARTICLES IN EYE RESULTING IN EYE IRRITATION TO EYES.	1	0	24
EMPLOYEE WAS OPERATING PACKING MECH LEVER AND HE WAS STRUCK BY TAILGATE RESULTING IN BRUISE TO CHEST.	1	1	65
TOTAL	12	13	1053

FIGURE 1-11

ALL USERS
DETAILED DESCRIPTION OF
REPAIRING EQUIPMENT ACCIDENTS

REPORTING PERIOD: JULY - SEPTEMBER 1976

THIS PROFILE IS A FORMATTED SENTENCE CONSISTING OF ACTIVITY, ACCIDENT TYPE, NATURE OF INJURY AND PART OF BODY.

PROFILE	NO. INJ	DAYS	COSTS
EMPLOYEE WAS REPAIRING EQUIP W HANDTOOL AND HE WAS HURT BY HANDLING HANDTOOL RESULTING IN BURN FROM HEAT TO EYES.	1	2	82
EMPLOYEE WAS REPAIRING EQUIP W HANDTOOL AND HE INJURED SELF WITH EQUIPMENT PART RESULTING IN BRUISE TO FINGERS.	1	0	0
EMPLOYEE WAS REPAIRING EQUIP W HANDTOOL AND HE CONTACTED HOT RADIATOR CAP RESULTING IN BURN FROM HEAT TO ARM.	1	10	195
EMPLOYEE WAS REPAIRING EQUIP W HANDTOOL AND HE FELL FROM VEHICLE ONTO PAVEMENT RESULTING IN BRUISE TO MULTIPLE BODY PARTS.	1	0	0
EMPLOYEE WAS REPAIRING EQUIP W HANDTOOL AND HE GOT AIRBORNE PARTICLES IN EYE RESULTING IN ABRASIONS TO EYES.	1	0	79
EMPLOYEE WAS REPAIRING EQUIP W HANDTOOL AND HE WAS HURT BY HANDLING EQUIPMENT PART RESULTING IN CUT/PUNCTURE TO FOREHEAD.	1	0	20
EMPLOYEE WAS REPAIRING EQUIP W HANDTOOL AND HE CONTACTED HOT HANDTOOL RESULTING IN BURN FROM HEAT TO ABDOMEN.	1	5	103
EMPLOYEE WAS REPAIRING EQUIP W HANDTOOL AND HE CONTACTED HOT EQUIPMENT PART RESULTING IN BURN FROM HEAT TO FOOT.	1	43	2380
EMPLOYEE WAS REPAIRING EQUIP W HANDTOOL AND HE INJURED SELF WITH HAMMER RESULTING IN CUT/PUNCTURE TO HAND.	1	2	49
EMPLOYEE WAS REPAIRING EQUIP W HANDTOOL AND HE INJURED SELF WITH WRENCH RESULTING IN CUT/PUNCTURE TO CHEEK.	1	0	20
TOTAL	10	62	2928

MAST3

FIGURE 1-12

ALL USERS
DETAILED DESCRIPTION OF
CHECKING EQUIPMENT MALFUNCTION ACCIDENTS

REPORTING PERIOD: JULY - SEPTEMBER 1976

THIS PROFILE IS A FORMATTED SENTENCE CONSISTING OF ACTIVITY, ACCIDENT TYPE, NATURE OF INJURY AND PART OF BODY.

PROFILE	NO. INJ	DAYS	COSTS
EMPLOYEE WAS CHECKING EQUIP MALFNCTN AND HE GOT AIRBORNE PARTICLES IN EYE RESULTING IN EYE IRRITATION TO EYES.	1	9	309
EMPLOYEE WAS CHECKING EQUIP MALFNCTN AND HE CONTACTED HOT WATER RESULTING IN BURN FROM HEAT TO HAND.	1	5	325
EMPLOYEE WAS CHECKING EQUIP MALFNCTN AND HE WAS CAUGHT BETWEEN TWO OBJECTS RESULTING IN FRACTURE TO TOES.	1	24	929
EMPLOYEE WAS CHECKING EQUIP MALFNCTN AND HE STRUCK AGAINST UNK VEH PART RESULTING IN BRUISE TO ARM.	1	0	0
EMPLOYEE WAS CHECKING EQUIP MALFNCTN AND HE WAS CAUGHT IN HOOD OF VEH RESULTING IN BRUISE TO HAND.	1	0	62
EMPLOYEE WAS CHECKING EQUIP MALFNCTN AND HE CONTACTED CAUSTIC OR TOXIC HYDRAULIC FLUID RESULTING IN EYE IRRITATION TO EYES.	1	1	126
EMPLOYEE WAS CHECKING EQUIP MALFNCTN AND HE CONTACTED HOT WATER RESULTING IN BURN FROM HEAT TO ARM.	1	2	106
EMPLOYEE WAS CHECKING EQUIP MALFNCTN AND HE FELL FROM SLIPPERY VEHICLE WHILE STEPPING DOWN RESULTING IN BRUISE TO ELBOW.	1	1	167
EMPLOYEE WAS CHECKING EQUIP MALFNCTN AND HE CONTACTED HOT GREASE RESULTING IN BURN FROM HEAT TO EYES.	1	0	60
TOTAL	9	42	2084

FIGURE 1-13
ALL USERS
DETAILED DESCRIPTION OF
OPENING EQUIPMENT PART ACCIDENTS

REPORTING PERIOD: JULY - SEPTEMBER 1976

THIS PROFILE IS A FORMATTED SENTENCE CONSISTING OF ACTIVITY, ACCIDENT TYPE, NATURE OF INJURY AND PART OF BODY.

PROFILE	NO. INJ	DAYS	COSTS
EMPLOYEE WAS OPENING TAILGATE AND HE WAS STRUCK BY UNKNOWN WASTE WHICH FELL OUT OF VEH RESULTING IN CUT/PUNCTURE TO SCALP.	1	0	0
EMPLOYEE WAS OPENING TAILGATE AND HE WAS INJURED IN OTHER TYPE OF ACCIDENT RESULTING IN BRUISE TO LEG.	2	2	121
EMPLOYEE WAS OPENING TAILGATE AND HE STRUCK AGAINST BACK OF VEH RESULTING IN BRUISE TO FINGERS.	1	1	44
EMPLOYEE WAS OPENING CAB DOOR AND HE INJURED SELF WITH CAB DOOR RESULTING IN BRUISE TO KNEE.	1	0	58
EMPLOYEE WAS OPENING TAILGATE AND HE WAS STRUCK BY TAILGATE RESULTING IN CUT/PUNCTURE TO CHEEK.	1	0	20
EMPLOYEE WAS OPENING TAILGATE AND HE INJURED SELF WITH TAILGATE RESULTING IN BRUISE TO CHEST.	1	0	61
TOTAL	7	3	304

FIGURE 1-14

ALL USERS
DETAILED DESCRIPTION OF
EMPTYING EQUIPMENT ACCIDENTS

REPORTING PERIOD: JULY - SEPTEMBER 1976

THIS PROFILE IS A FORMATTED SENTENCE CONSISTING OF ACTIVITY, ACCIDENT TYPE, NATURE OF INJURY AND PART OF BODY.

PROFILE	NO. INJ	DAYS	COSTS
EMPLOYEE WAS EMPTYING VEH AND HE CONTACTED ALLERGENIC PARTICLES IN WASTE RESULTING IN DERMATITIS TO MULTIPLE BODY PARTS.	1	2	80
EMPLOYEE WAS EMPTYING VEH AND HE CONTACTED HOT EXHAUST PIPE RESULTING IN BURN FROM HEAT TO ARM.	1	0	0
EMPLOYEE WAS EMPTYING VEH AND HE GOT AIRBORNE PARTICLES IN EYE RESULTING IN EYE IRRITATION TO EYES.	2	1	165
EMPLOYEE WAS EMPTYING VEH AND HE STEPPED ON NAIL RESULTING IN CUT/PUNCTURE TO FOOT.	1	0	15
EMPLOYEE WAS EMPTYING VEH AND HE WAS CAUGHT OTHER VEH PART RESULTING IN BRUISE TO FINGERS.	1	0	64
EMPLOYEE WAS EMPTYING VEH AND HE GOT WASTE PARTICLES IN EYE RESULTING IN EYE IRRITATION TO EYES.	1	0	145
TOTAL	7	3	469

FIGURE 1-15

ALL USERS
DETAILED DESCRIPTION OF
WASHING VEHICLE ACCIDENTS

REPORTING PERIOD: JULY - SEPTEMBER 1976

THIS PROFILE IS A FORMATTED SENTENCE CONSISTING OF ACTIVITY, ACCIDENT TYPE, NATURE OF INJURY AND PART OF BODY.

PROFILE	NO. INJ	DAYS	COSTS
EMPLOYEE WAS WASHING EQUIP AND HE STRUCK AGAINST POST RESULTING IN BRUISE TO KNEE.	1	0	0
EMPLOYEE WAS WASHING EQUIP AND HE CONTACTED HOT STEAM RESULTING IN BURN FROM HEAT TO FOOT.	1	2	94
EMPLOYEE WAS WASHING EQUIP AND HE CONTACTED CAUSTIC OR TOXIC ACID RESULTING IN CHEMICAL BURN TO EYES.	1	1	139
EMPLOYEE WAS WASHING EQUIP AND HE CONTACTED CAUSTIC OR TOXIC DETERGENT RESULTING IN DERMATITIS TO ARM.	1	3	60
EMPLOYEE WAS WASHING EQUIP AND HE FELL ON PAVEMENT RESULTING IN BRUISE TO ARM.	1	5	237
EMPLOYEE WAS WASHING EQUIP AND HE FELL FROM WET VEHICLE ONTO PAVEMENT RESULTING IN BRUISE TO MULTIPLE BODY PARTS.	1	0	0
EMPLOYEE WAS WASHING EQUIP AND HE FELL ON WET PAVEMENT RESULTING IN BRUISE TO CHEST.	1	0	20
TOTAL	7	11	550

FIGURE 1-16

ALL USERS
DETAILED DESCRIPTION OF
CLOSING EQUIPMENT PART ACCIDENTS

REPORTING PERIOD: JULY - SEPTEMBER 1976

THIS PROFILE IS A FORMATTED SENTENCE CONSISTING OF ACTIVITY, ACCIDENT TYPE, NATURE OF INJURY AND PART OF BODY.

PROFILE	NO. INJ	DAYS	COSTS
EMPLOYEE WAS CLOSING CAB DOOR AND HE WAS CAUGHT IN CAB DOOR RESULTING IN CUT/PUNCTURE TO FINGERS.	1	22	337
EMPLOYEE WAS CLOSING TURNBUCKLE AND HE WAS CAUGHT IN TAILGATE RESULTING IN FRACTURE TO FINGERS.	1	0	41
EMPLOYEE WAS CLOSING TAILGATE AND HE WAS CAUGHT IN TAILGATE RESULTING IN FRACTURE TO FINGERS.	1	39	2255
EMPLOYEE WAS CLOSING TAILGATE AND HE WAS CAUGHT IN TAILGATE RESULTING IN BRUISE TO FINGERS.	1	0	20
TOTAL	4	61	2653

FIGURE 1-17

ALL USERS
DETAILED DESCRIPTION OF
HOOKING OR UNHOOKING EQUIPMENT ACCIDENTS

REPORTING PERIOD: JULY - SEPTEMBER 1976

THIS PROFILE IS A FORMATTED SENTENCE CONSISTING OF ACTIVITY, ACCIDENT TYPE, NATURE OF INJURY AND PART OF BODY.

PROFILE	NO. INJ	DAYS	COSTS
EMPLOYEE WAS HOOKING OR UNHOOKING TONGUE OF TRAILER AND HE OVEREXERTED SELF WITH TONGUE OF TRAILER RESULTING IN SPRAIN OR STRAIN TO BACK.	2	19	615
EMPLOYEE WAS HOOKING OR UNHOOKING TRAILER RAMP AND HE OVEREXERTED SELF WITH TRAILER RAMP RESULTING IN SPRAIN OR STRAIN TO ARM.	1	0	20
TOTAL	3	19	635

FIGURE 1-18

EQUIPMENT RELATED ACCIDENTS
PRELIMINARY TASK/HAZARD ANALYSIS

TASK	HAZARDS	POSSIBLE COUNTERMEASURE(S)
1. Driving	a. Struck by objects thrown up by wheels of moving equipment (e.g., compactors and bull-dozers operating at the landfill).	Screen guards around cabs.
	b. Received objects in eye on windy days or while at landfill emptying equipment.	Keep windows closed under those conditions.
	c. Strained muscles from going over rough terrain, bumps in the road, rocks and bricks in the road, etc.	Drive slower and try to avoid these hazards. Wear seat belts.
	d. Motor vehicle accidents (e.g., being struck by another vehicle, colliding with other vehicle, hitting curb, making sudden stops).	Take defensive driving course. Wear seat belts.
2. Riding	a. Struck by tree limb.	Keep body close to vehicle when riding on rear or side steps for short distances. Driver should be aware of hazard to coworker and should drive defensively. Where hazard cannot be avoided (narrow alleys) have employee(s) ride in cab instead.
	b. Received object in eye.	Wear eye protection, especially when environmental condition is dusty.
	c. Caught between truck and object as truck was backing (riding on rear step).	Do not ride on step when truck is backing. Employee(s) should be on the ground, visible to driver in rear windows at all times, and using hand signals to direct driver in backing.

EQUIPMENT RELATED ACCIDENTS
PRELIMINARY TASK/HAZARD ANALYSIS

TASK	HAZARDS	POSSIBLE COUNTERMEASURE(S)
2. Riding (contd.)	d. Fell off step or struck against truck when truck went over a bump or depression.	Defensive driver training. Keep firm grip on handhold. Ride in cab if distance is more than a couple of blocks. Drive slower on roads known to be rough.
	e. Fell off step when truck turned corner, made sudden stop, made sudden start or hit curb.	Defensive driver training. Keep firm grip on handhold. Ride in cab if distance is more than a couple of blocks.
	f. Fell off wet step or fell due to wet handhold or gloves.	On rainy days, ride in cab as much as possible. Slip resistant steps. Replace material when worn or install open-mesh steps that will not accumulate water, snow or oil.
	g. Fell when step collapsed.	Check welds or braces for steps on a regular basis.
	h. Caught hand or foot in packing mechanism.	Do not operate packing mechanism while anyone is riding on the rear step.
	i. Motor vehicle accidents.	Driver training.
3. Mounting step	a. Struck against truck when jumping on step to catch truck that was pulling away.	Better coordination between driver and rider(s): signal given by rider(s) when they are secure on the step <u>before</u> driver pulls away.
	b. Slipped on or fell off wet step.	Slip resistant steps and replace material when worn. Or install open-mesh steps that will not accumulate water, snow or oil. Make sure handhold is secure <u>before</u> mounting and step up on step firmly.

EQUIPMENT RELATED ACCIDENTS
PRELIMINARY TASK/HAZARD ANALYSIS

TASK	HAZARDS	POSSIBLE COUNTERMEASURE(S)
4. Dismounting step	a. Sprained ankle when jumped off.	Safety rules against haste in jumping off step. Extended hand rails.
	b. Stepped down on sharp object (e.g., board with nail, glass) puncturing foot.	Safety shoes. Look where stepping when dismounting.
	c. Stepped on object on ground or other uneven surface (e.g., rock, brick, uneven sidewalk, drainage hole, edge of curb, hole in ground) spraining ankle.	Safety shoes. Look where stepping when dismounting.
	d. Stepped on slippery surface (e.g., loose gravel, oil, wet grass) spraining ankle or falling.	Extended hand rails. Use when dismounting. Look where stepping when dismounting.
5. Mounting cab	a. Struck by door	Make sure door is completely open.
	b. Struck against door, door handle or step while mounting.	Make sure door is fully opened before mounting. Watch where stepping.
	c. Slipped on running board and struck against truck or fell.	Slip resistant running boards. Install extended hand rails. Make sure handhold is secure before mounting and step up on running board firmly.
6. Dismounting cab	a. Foot run over by truck that was still moving forward.	Safety rule against dismounting from truck until truck has come to a complete stop and has completed its back lurching motion.

EQUIPMENT RELATED ACCIDENTS
PRELIMINARY TASK/HAZARD ANALYSIS

TASK	HAZARDS	POSSIBLE COUNTERMEASURE(S)
6. Dismounting cab (contd.)	b. Misstepped and fell.	Extended hand rails. Use when dismounting. Dismount backwards rather than forwards, and look where stepping.
	c. Slipped on running board and sprained ankle or back or fell.	Slip resistant running boards. Replace when material is worn. Extended hand rails. Have firm grip on handhold before dismounting backwards, and look where stepping.
	d. Stepped on sharp object on ground puncturing foot.	Safety shoes. Look where stepping when dismounting.
	e. Stepped on object on ground or other uneven surface spraining ankle.	Extended hand rails. Have firm grip on handhold before dismounting backwards, and look where stepping.
	f. Stepped on slippery ground spraining ankle or falling.	Extended hand rails. Have firm grip on handhold before dismounting backwards.
7. Dumping container	a. Struck by waste that fell out of the hopper or container.	Do not overfill hopper. Operate the packing mechanism as soon as the hopper is full. Avoid holding the container too high.
	b. Struck by container being dumped by coworker or thrown by coworker.	Better coordination between coworkers while dumping at the back of the truck. Safety rule against throwing containers.
	c. Object in eye (not ejected).	Eye protection. Turn head when dumping.
	d. Struck by packer that rolled back when parked on an incline.	Set emergency brakes when packer is stopped on an incline.
	e. Struck against truck when turning to dump.	Avoid haste. Avoid the quick-jerk hoisting action.

EQUIPMENT RELATED ACCIDENTS
PRELIMINARY TASK/HAZARD ANALYSIS

TASK	HAZARDS	POSSIBLE COUNTERMEASURE(S)
7. Dumping container (contd)	f. Threw plastic bag into hopper: bag burst and was struck by waste.	Eye protection. Turn head when dumping. Safety rule against throwing.
	g. Hand caught between container and edge of hopper.	Avoid jerking the container up to dump. Get a firm grip on the handles, use the proper stance, and lift to dump in one steady, continuous motion. Help in lifting the container should be obtained if container is overweight.
	h. Struck by waste ejected by the hopper.	Stand clear of the back of the truck while the packing mechanism is operating. Eye protection. Install "flaps."
	i. Falls against hopper due to slipping on waste on ground.	Clean up waste as soon as it has fallen. Avoid jerking the container up to dump.
	j. Falls against hopper due to wet, icy or oily surfaces.	Avoid jerking the container up to dump.
	k. Overexertion while lifting to dump.	Avoid jerking the container up to dump. Avoid twisting while dumping.
	l. Overexertion while catching a falling container.	Train employees to let container fall and to step away from the path of the falling container.
	m. Fell off step of side loader.	Slip resistant step. Avoid jerking the container up to dump.

EQUIPMENT RELATED ACCIDENTS
PRELIMINARY TASK/HAZARD ANALYSIS

TASK	HAZARDS	POSSIBLE COUNTERMEASURE(S)
8. Dumping uncontained waste	a. Struck by sharp waste (e.g., ceramic toilet bowls, mirrors, fluorescent bulbs) that shattered as it struck the hopper edge).	Safety rule against throwing. Train employees on the hazards of these specific wastes.
	b. Struck against the back of the truck.	Safety rule against throwing.
	c. Struck by furniture or appliance while loading them onto open bed truck.	Use lift gate.
9. Operating packing mechanism	a. Struck by waste ejected from hopper.	Eye protection. Keep head turned away from the hopper. Operate the lever with the left hand. Install "flaps" over packer blade.
	b. Caught hand in packing mechanism.	Train employees not to try to push back waste that is falling out. Use two-handed operating buttons. Install emergency stop buttons.
10. Opening or closing equipment part	a. Overexertion when lifting cab of vehicle.	Obtain aid of coworker in lifting; train employees on how to lift in unison.
	b. Struck by tailgate when opening tailgate.	Release pressure first. Stand away from the swing arc of the tailgate as it opens.
	c. Caught fingers in tailgate latch when closing tailgate.	Check position of hands before closing tailgate.

EQUIPMENT RELATED ACCIDENTS
PRELIMINARY TASK/HAZARD ANALYSIS

TASK	HAZARDS	POSSIBLE COUNTERMEASURE(S)
11. Hooking or unhooking equipment	a. Overexertion when hooking or unhooking trailer.	Obtain aid of coworker. Keep trailer from slipping. Do not attempt on incline.
	b. Overexertion when hooking or unhooking bulk containers.	Obtain aid of coworker. Keep container from slipping. Do not attempt on incline.
12. Standing or walking behind vehicle	a. Struck by object ejected by the packing mechanism.	Train employees to stay clear of the back of the vehicle when the hopper is operating. Install "flaps." Eye protection.
	b. Overcome by exhaust fumes.	Spend as little time behind the truck as possible. Check exhaust systems on a regular basis.
	c. Struck by private vehicle.	Wear traffic vests. Only pick up from one side of street at a time. Employ caution when walking from the back of the truck into the flow of traffic. Turn on emergency flasher lights when stopped.

SECTION II

THIRD QUARTER IRIS USER INDUSTRY-WIDE DATA

The accidents received by IRIS from 44 users are covered in this section. The data is presented at two levels of detail. Part I compares the frequency, severity and costs rates of individual users and compares their averages as they relate to industry-wide trends. Part II summarizes individual accident characteristics for frequency, days lost and costs.

FIGURE 2-1 gives operational background data on the IRIS users.

PART I - FREQUENCY, SEVERITY AND COSTS RATES

FIGURES 2-2 through 2-5 recap the frequency, severity and costs of injuries for this quarter:

- FIGURE 2-2: Summary of Injuries by Frequency, Severity and Costs. Compares the solid waste management industry with the national average for all industries.

- FIGURE 2-3: Number of Injuries Reported by Type of Severity. Lists the IRIS users by number, and shows what percentage of injuries each user had in each severity level (e.g., first aid case, nonfatal case without lost workdays, lost workday case, permanent disability case and fatal case).

- FIGURE 2-4: Comparison of Injury Rates and OSHA Days Lost for All Users. Compares the rates and days lost for the first three quarters of 1976, for each user, in user number order.

- FIGURE 2-5: Comparison of Direct Costs by Reporting Period for All Users. Compares the total costs and costs rates for the first three quarters of 1976, for each user, in user number order.

A few definitions of the terms used in the following FIGURES are:

- OSHA Recordable Injury. Defined by OSHA as a non-first aid injury.

- OSHA Incidence Rate. It is a measure of the frequency of injuries. The OSHA incidence rate is the number of OSHA recordable injuries per 200,000 hours of exposure. The base figure of "200,000 hours" is the standard figure used in OSHA statistics. It is roughly equivalent to 100 full-time employees working a year or 100 man-years (i.e., 100 employees working 40 hours per week for 50 weeks per year).

  OSHA incidence rates can be thought of as being roughly equivalent to the number of injuries that will occur to 100 employees during a year. Therefore, an OSHA incidence rate of 37 means that the organization is having 37 injuries per year for each 100 employees or that, on the average, 1 out of every 3 employees are being injured. The national average OSHA incidence rate for all industries has been around 10 for the last several years.

- Severity Rate. The severity rate is similar to the OSHA incidence rate, except that it reflects the number of OSHA days lost (i.e., workdays lost and light duty days), instead of the number of injuries, per 100 man-years worked. For example, a severity rate of 500 would mean roughly that an organization is losing 500 workdays for every 100 employees per year, or that on the average each employee is losing 5 days a year for on-the-job injuries.

- Direct Costs. Direct costs are normally those for which money was actually expended and include worker's compensation, medical expenses, and wage continuation benefits (e.g., injury leave). There are many indirect costs such as down time, replacement time, lost time by witnesses and supervisors, etc., which are not included in these figures. Indirect costs are estimated to be 5 times the direct costs in cities according to the National Safety Council.

- Average Direct Costs per OSHA Recordable Injury. An average direct cost per OSHA recordable injury of $500 means that on the average each OSHA recorable injury (i.e., a non-first-aid case) is costing the organization $500!

- Direct Cost per Man-Year. It shows the cost per 2,000 hours or the average cost per year per employee. A direct cost per man-year of $200 would mean that on the average an organization's injuries are costing $200 per employee per year.

In reviewing these FIGURES, the data for the AVERAGE (shown on the FIGURES as AVG) is the most important because it summarizes the results for all users combined. After examining the AVERAGES, it is important to examine how great the range of rates between users is. Wide ranges are important because they show that it is possible to achieve lower rates of injury under given operating systems and safety programs.

FIGURE 2-1

DESCRIPTION OF USERS BY OPERATIONAL CHARACTERISTICS

User Number	M=Municipal P=Private	Geograph. Area	No. of Employees	Point of Collection: M=Mechanical A=Alley BY=Backyard w/o intermed. can BYT=Backyard-Tub BYC=Backyard-Cart CS=Curbside	Type of Shift	Type of Service Provided			
						Coll. Crew Size(s)			Disposal
						Resid.	Comm.	Resid. & Comm.	L=Landfill I=Incinerator T=Trans. Stn.
101	M	South	325	CS/A	Task/ Fixed	4	4		L
109	M	Midwest	500	BY/BYC	Fixed	4,3			---
111	M	West	280	CS	Task	2			L
125	M	South	650	CS	Task		1	3	L,I
136	M	South	140	M/A	Fixed	3,1	1		L
140	M	South	844	CS	Task	3			---
146	M	South	295	CS/A	Task	1,2,3	1,2		L,T
148	M	Northeast	265	CS	Task	3	3		---
161	M	Midwest	125	CS/A	Task	3,1			L
171	M	Midwest	370	A	Task/ Fixed	3			---
172	M	West	700	M/CS/A	Task/ Fixed	1,3,2			L
179	M	Northeast	532	CS	Task	2,3	3		I,T
181	M	Midwest	278	BY	Task	4			

OPERATIONAL CHARACTERISTICS CONTINUED.

User Number	M=Municipal P=Private	Geograph. Area	No. of Employees	Point of Collection: M=Mechanical A=Alley BY=Backyard w/o intermed. can BYT=Backyard-Tub BYC=Backyard-Cart CS=Curbside	Type of Shift	Type of Service Provided			
						Coll. Crew Size(s)			Disposal
						Resid.	Comm.	Resid. & Comm.	L=Landfill I=Incinerator T=Trans. Stn.
191	M	South	177	CS/A	Task/ Fixed	3	1		L
197	M	West	86	CS	Task	2	2,1	2	---
204	M	West	52	CS/A,M	Fixed	1,3	1,3		L
207	M	West	205	BYC	Task	3	2		---
210	M	West	15	CS	Task			1,2	---
211	M	West	40	CS/A	Task	2	2		L
212	M	West	130	CS/A	Fixed			2	---
215	M	South	60	CS/BY/BYT	Task/ Fixed	3	1		---
217	M	South	820	CS/A/BY	Fixed	1,2,3			L,T
221	M	West	210	CS	Task	2			---
235	M	South	125	BYT/A/CS	Task	3	3		L
236	M	South	103	CS	Task/ Fixed	3	1		L

OPERATIONAL CHARACTERISTICS CONTINUED.

User Number	M=Municipal P=Private	Geograph. Area	No. of Employees	Point of Collection: M=Mechanical A=Alley BY=Backyard w/o intermed. can BYT=Backyard-Tub BYC=Backyard-Cart CS=Curbside	Type of Shift	Type of Service Provided: Coll. Crew Size(s): Resid.	Comm.	Resid. & Comm.	Disposal: L=Landfill I=Incinerator T=Trans. Stn.
237	M	Midwest	90	A/BYC	Task/ Fixed			3,4	---
242	M	South	101	CS/BY/BYT/A	Task/ Fixed	3	3		L,T
244	M	West	30	BYT/BYC	Task	2	1,2		---
260	M	West	168	CS/BYT/A	Task	1,2	2,3	2	L
261	M	Midwest	8	CS/A	Task	3			L
265	M	West	200	CS/BYT/BYC	Task	1,2	2		L,T
272	M	Northeast	272	CS	Task	3	3		L,I
275	M	Northeast	40	CS	Task	3			---
283	M	South	72	CS/A	Task/ Fixed	2	3,1		L,T
285	M	Midwest	79	A/BYT/BYC	Task	3			L
286	M	West	8		Fixed				L,T
292	M	West	225	CS/A/BYT/BYC	Fixed	1,3	2		L

OPERATIONAL CHARACTERISTICS CONTINUED.

User Number	M=Municipal P=Private	Geograph. Area	No. of Employees	Point of Collection: M=Mechanical A=Alley BY=Backyard w/o intermed. can BYT=Backyard-Tub BYC=Backyard-Cart CS=Curbside	Type of Shift	Type of Service Provided: Coll. Crew Size(s): Resid.	Comm.	Resid. & Comm.	Disposal: L=Landfill I=Incinerator T=Trans. Stn.
295	M	South	179	CS/BY	Task/ Fixed	4	1		L
296	M	West	43	CS/A/BY	Fixed	1	2,1		---
316	M	Northeast	475	CS/A/BYT	Fixed	2,3	2,3		---
318	M	West	48	A/CS	Fixed	3	3	3	L
324	P	Midwest	17	CS/A/BYT/BYC	Fixed			1,2	---
325	M	West	45	CS/A	Fixed	2,3	1,2,3		L
326	M	South	23	CS	Task	3	3		L
327	M	South	140	CS	Task	3	2,3		L,I
328	M	Midwest	33	CS	Task/ Fixed	2,1	2		T
329	P	West	20	CS	Task	3	2		---
330	M	South	60	A/CS	Fixed	3	3	3	L
331	M	Midwest	35	CS/A	Task	3			---

OPERATIONAL CHARACTERISTICS CONTINUED.

User Number	M=Municipal P=Private	Geograph. Area	No. of Employees	Point of Collection: M=Mechanical A=Alley BY=Backyard w/o intermed. can BYT=Backyard-Tub BYC=Backyard-Cart CS=Curbside	Type of Shift	Type of Service Provided			
						Coll. Crew Size(s)			Disposal
						Resid.	Comm.	Resid. & Comm.	L=Landfill I=Incinerator T=Trans. Stn.
333	M	Northeast	43	BY	Task	3			---
337	M	Northeast	141	CS	Task	3			---
338	M	Northeast	120	CS	Task	3	3		---
339	M	Northeast	151	CS	Task	3	2		---
341	M	West	35	CS/A	Task	2	2		---
343	M	West	17	CS	Fixed	1			---

FIGURE 2-2

SUMMARY OF INJURIES BY FREQUENCY, SEVERITY AND COSTS

FREQUENCY

- There were 1,082 cases reported by 44 of the 52 IRIS users on-line: 171 first aid cases, 351 nonfatal cases without lost workdays, 559 lost workday cases and 1 permanent disability case. Total man-hours for this quarter was 3,795,819.

- The AVERAGE OSHA incidence rate was 48 for this quarter, the highest of all previous quarters. This means that one out of every two solid waste industry employees will experience a non-first aid injury a year. The national OSHA incidence rate for all industries was 10.4. Therefore, the solid waste industry was experiencing nearly five times as many injuries as the average industry.

- IRIS users ranged in frequency rates from User No. 341 that was experiencing 1.2 injuries per employee per year, to User No. 136 that was experiencing 3 injuries per 100 employees per year.

SEVERITY (Days lost given are not final. These figures reflect what was received from IRIS users by December 31, 1976, and may be gross underestimates. For example, in the six months since the publication of the first quarter Accident Trends, the OSHA severity rate has increased from 269 to 393, and not all cases are final yet.)

- So far, 560 cases this quarter incurred 5,366 workdays lost and light duty days.

- 53% of the total cases resulted in workdays lost and/or light duty days. The national average for all industries is 33%. This means that the solid waste industry has more than 1 1/2 times as many lost workday injuries as the average industry.

- The AVERAGE OSHA severity rate (number of lost workdays and light duty days) was 283. This means that on the average, each employee is losing 2.8 days per year for injuries. One user's rate was as high as 24 days lost per year per employee; several are losing zero days a year per employee.

- On the AVERAGE, each lost workday case was resulting in 9.58 workdays lost so far. This was lower than the national average for all industries, which was 10.5.

DIRECT COSTS (Costs given are not final. These figures reflect what was received from IRIS users by December 31, 1976, and may be gross underestimates. For example, first quarter's AVERAGE cost per OSHA recordable injury has gone up from $296 to $454.)

- Total direct costs so far for injuries that occurred during the third quarter was $252,753.

- The AVERAGE cost per OSHA recordable injury was $277.

- The AVERAGE cost per man-year was $133. This means that the average solid waste injury, that was non-first aid for this quarter, was costing $133 per full-time employee per year so far.

FIGURE 2-3

NUMBER OF INJURIES REPORTED BY TYPE OF SEVERITY
COMPARISON OF 'IRIS' USERS

EPORTING PERIOD: JULY - SEPTEMBER 1976

NSTRUCTIONS: THE PERCENTAGES ARE A FRACTION OF THE TOTAL CASES EPORTED. THEY TOTAL TO APPROXIMATELY 100% IF READ HORIZONTALLY. OMPARE YOUR ORGANIZATION'S PERCENTAGES WITH THE AVERAGE AND WITH THER IRIS USERS. HIGHER THAN AVERAGE PERCENTAGES IN THE LOWER EVERITY GROUPS, I.E., TOWARD THE LEFT, ARE DESIRED, AS ARE LOWER HAN AVERAGE PERCENTAGES TOWARD THE RIGHT.

RIS SER NO.	TOTAL CASES RPT'D	FIRST AID		NON-FATAL W/O LST WKDAY		LOST WKDY CASES		PERM DISAB		FATALITY	
		NO.	%	NO.	%	NO.	%	NO.	%	NO.	%
VG	1,082	171	16	351	32	559	52	1	0.09	0	0.00
.01	45	1	2	32	71	12	27	0	0.00	0	0.00
.09	72	0	0	35	49	37	51	0	0.00	0	0.00
.11	68	5	7	17	25	46	68	0	0.00	0	0.00
.25	105	10	10	19	18	76	72	0	0.00	0	0.00
.36	1	0	0	0	0	1	100	0	0.00	0	0.00
146	33	7	21	15	45	10	30	1	3.03	0	0.00
148	3	0	0	3	100	0	0	0	0.00	0	0.00
161	28	12	43	11	39	5	18	0	0.00	0	0.00
171	39	0	0	20	51	19	49	0	0.00	0	0.00
172	101	0	0	45	45	56	55	0	0.00	0	0.00
179	24	6	25	8	33	10	42	0	0.00	0	0.00
181	48	3	6	18	37	27	56	0	0.00	0	0.00
186	28	10	36	9	32	9	32	0	0.00	0	0.00
191	31	1	3	14	45	16	52	0	0.00	0	0.00
197	6	0	0	1	17	5	83	0	0.00	0	0.00
204	6	0	0	5	83	1	17	0	0.00	0	0.00
207	32	0	0	11	34	21	66	0	0.00	0	0.00
210	2	0	0	0	0	2	100	0	0.00	0	0.00
211	7	3	43	0	0	4	57	0	0.00	0	0.00
215	3	0	0	0	0	3	100	0	0.00	0	0.00
221	9	5	56	0	0	4	44	0	0.00	0	0.00
236	24	1	4	10	42	13	54	0	0.00	0	0.00
237	17	7	41	3	18	7	41	0	0.00	0	0.00
244	3	0	0	1	33	2	67	0	0.00	0	0.00
260	33	0	0	12	36	21	64	0	0.00	0	0.00
265	49	22	45	4	8	23	47	0	0.00	0	0.00
272	6	1	17	1	17	4	67	0	0.00	0	0.00
275	6	0	0	3	50	3	50	0	0.00	0	0.00
283	11	2	18	3	27	6	55	0	0.00	0	0.00
292	12	7	58	1	8	4	33	0	0.00	0	0.00
295	6	0	0	4	67	2	33	0	0.00	0	0.00
296	8	2	25	2	25	4	50	0	0.00	0	0.00
316	117	46	39	32	27	39	33	0	0.00	0	0.00
318	18	7	39	0	0	11	61	0	0.00	0	0.00
324	3	0	0	0	0	3	100	0	0.00	0	0.00

IRIS USER NO.	TOTAL CASES RPT'D	FIRST AID		NON-FATAL W/O LST WKDAY		LOST WKDY CASES		PERM DISAB		FATALITY
		NO.	%	NO.	%	NO.	%	NO.	%	NO.
325	7	0	0	3	43	4	57	0	0.00	0
329	6	5	83	0	0	1	17	0	0.00	0
330	9	0	0	5	56	4	44	0	0.00	0
333	4	0	0	3	75	1	25	0	0.00	0
337	14	0	0	0	0	14	100	0	0.00	0
338	9	0	0	0	0	9	100	0	0.00	0
339	10	2	20	0	0	8	80	0	0.00	0
341	14	3	21	1	7	10	71	0	0.00	0
343	5	3	60	0	0	2	40	0	0.00	0

COMPARISON OF INJURY RATES AND OSHA DAYS LOST FOR ALL USERS

USER	OSHA INCIDENCE RATE QTR 1	QTR 2	QTR 3	QTR 4	SEVERITY RATE QTR 1	QTR 2	QTR 3	QTR 4	AVERAGE OSHA DAYS LOST QTR 1	QTR 2	QTR 3	QTR 4
101	12	34	46		48	310	72		6.50	20.92	5.75	
109	35	48	51		192	175	200		8.03	8.15	7.65	
111	69	78	83		1123	816	556		23.73	16.97	9.17	
125	31	35	42		495	348	358		20.45	12.07	10.58	
129	0				0				0.00			
136	15	0	3		577	0	24		38.60	0.00	8.00	
140	47	55			525	680			15.37	16.56		
146	24	22	35		30	139	144		4.40	20.60	9.82	
148		37	5			237	0			12.86	0.00	
161	13	44	68		0	35	106		0.00	1.60	5.00	
171	43	62	57		208	228	290		9.58	5.96	10.53	
172	50	55	70		453	684	444		13.89	16.84	11.39	
179			34				241				12.70	
181	44	50	64		369	148	264		11.48	4.26	6.89	
186	19	24	25		105	279	102		12.25	22.00	8.22	
191	58	47	96		192	153	236		4.00	5.11	4.62	
197			59				493				10.00	
204	81	139	50		350	86	58		13.00	8.00	7.00	
207	78	97	72		579	253	429		10.30	5.35	9.05	
210	103	0	49		464	0	926		9.00	0.00	19.00	
211	9	68	34		148	281	94		17.00	4.71	2.75	
212	79	44			739	444			9.39	10.00		
215	0	0	22		0	0	419		0.00	0.00	19.00	
217		45				194				10.89		
221			36				163				4.50	
235	34	56			169	0			6.00	0.00		
236	89	105	75		1492	672	253		18.53	8.86	6.00	
237	45	34	43		106	154	94		3.50	6.40	3.14	
242	4	0	0		99	0	0		25.00	0.00	0.00	
244	140	59	44		256	206	190		2.75	3.50	6.50	
260	69	55	103		659	525	1128		16.67	16.20	17.29	
261	48	0	0		145	0	0		3.00	0.00	0.00	
265	34	47	66		252	308	412		8.64	7.80	7.30	

USER	OSHA INCIDENCE RATE QTR 1	QTR 2	QTR 3	QTR 4	SEVERITY RATE QTR 1	QTR 2	QTR 3	QTR 4	AVERAGE OSHA DAYS LOST QTR 1	QTR 2	QTR 3	QTR 4
272	17	15	19		196	11	99		17.00	1.50	6.50	
275		182	59			1944	79			10.67	2.67	
283	34	50	51		0	134	119		0.00	8.00	3.50	
285	20	0			39	0			2.00	0.00		
286	0	0	0		0	0	0		0.00	0.00	0.00	
292	9	11	7		594	20	15		63.50	4.33	2.75	
295	26	20	20		98	20	66		4.75	2.00	10.00	
296	56	76	58		1398	1800	221		25.00	31.50	5.75	
316		81	60			874	362			16.05	10.92	
318			79				2456				31.09	
324		79	71			0	236			0.00	3.33	
325		66	50			208	372			4.75	13.00	
326			0				0				0.00	
327		0	0			0	0			0.00	0.00	
329		106	17			106	102			2.00	6.00	
330		73	70			245	78			5.00	2.50	
331			0				0				0.00	
333			101				50				2.00	
337			68				633				9.29	
338			50				391				7.78	
339			36				186				5.12	
341			118				1402				13.10	
343			76				151				2.00	
AVG.	40	46	48		393	345	283		14.25	12.41	9.58	

USER	TOTAL INJURY COSTS QTR 1	QTR 2	QTR 3	QTR 4	AVG. COST PER OSHA REC. INJ. QTR 1	QTR 2	QTR 3	QTR 4	AVERAGE COST PER MAN YEAR QTR 1	QTR 2	QTR 3	QTR 4
101	4,210	19,848	4,555		386	660	103		51	226	47	
109	13,327	12,693	19,383		307	208	269		109	100	137	
111	47,749	28,972	20,696		993	526	327		684	409	272	
125	37,713	24,356	27,641		618	338	290		194	119	123	
129	0				0				0			
136	1,970	0	205		394	0	205		58	0	6	
140	39,842	69,843			711	688			331	382		
146	1,839	5,442	3,060		102	340	117		24	73	40	
148		3,577	110			255	36			94	1	
161	135	815	1,313		18	80	80		6	35	55	
171	3,582	6,376	9,486		148	163	243		64	101	137	
172	24,829	37,382	28,166		359	485	278		180	266	196	
179			4,749				262				90	
181	11,510	5,081	9,759		391	153	216		176	76	138	
186	1,295	8,021	2,950		143	471	163		27	113	40	
191	1,475	1,685	2,101		86	120	70		50	56	66	
197			2,502				417				246	
204	2,481	517	226		275	39	37		222	55	18	
207	4,297	4,626	3,855		134	112	120		104	109	87	
210	1,445	0	1,977		361	0	988		372	0	481	
211	794	1,987	600		758	248	145		68	168	51	
212	14,222	6,013			617	462			486	205		
215	0	0	3,391		0	0	1,130		0	0	249	
217		83,867				914				414		
221			1,045				253				94	
235	1,185	750			197	50			66	27		
236	12,768	9,550	8,223		608	329	357		541	345	266	
237	604	1,813	1,583		201	259	153		91	87	67	
242	6,877	0	0		6,877	0	0		271	0	0	
244	706	904	736		117	226	245		164	133	107	
260	2,321	5,620	7,398		110	330	224		76	181	229	
261	159	0	0		159	0	0		76	0	0	
265	2,820	8,216	14,019		214	455	519		74	216	343	

USER	TOTAL INJURY COSTS QTR 1	QTR 2	QTR 3	QTR 4	AVG. COST PER OSHA REC. INJ. QTR 1	QTR 2	QTR 3	QTR 4	AVERAGE COST PER MAN YEAR QTR 1	QTR 2	QTR 3	QTR 4
272	1,313	109	1,224		437	27	244		75	4	46	
275		1,437	277			239	46			436	27	
283	119	1,205	1,028		59	132	114		20	67	58	
285	61	0			61	0			12	0		
286	0	0	0		0	0	0		0	0	0	
292	5,439	894	483		2,719	127	96		254	13	6	
295	911	578	1,092		177	96	182		46	19	36	
296	2,006	9,534	1,312		1,003	1,191	218		560	907	125	
316		34,048	19,999			558	281			452	170	
318			14,061				1,278				1,009	
324		92	491			30	163			24	115	
325		2,159	4,736			359	676			236	339	
326			0				0				0	
327		0	0			0	0			0	0	
329		153	378			66	338			81	64	
330		1,053	480			351	53			257	37	
331			0				0				0	
333			223				55				56	
337			11,442				817				557	
338			6,431				714				359	
339			3,152				394				143	
341			5,874				534				628	
343			341				170				128	
AVG.	250,004	399,216	252,753		454	437	277		180	201	133	

FIGURE 2-6

SUMMARY OF ACCIDENT FACTORS FOR SELECTED ACCIDENT CHARACTERISTICS WITH HIGHEST PERCENT OF OSHA RECORDABLE INJURIES, OSHA DAYS LOST AND DIRECT COSTS

Type of Characteristic	Factors With The:		
	Highest % of OSHA Recordable Injuries	Highest % of OSHA Days Lost	Highest % of Direct Costs
Activity	Lifting or dumping container - 35% Getting off equipment - 8% Standing or walking - 7%	Lifting or dumping container - 39% Riding on equipment - 8% Carrying container - 8%	Lifting or dumping container - 35% Riding on equipment - 10% Carrying container - 9%
Accident Type	Overexertion involving container - 17% Struck by waste - 7% Struck self with container being handled - 5%	Overexertion involving container - 25% Fall to a different level - 7% Caught between objects - 7%	Overexertion involving container - 23% Caught between objects - 10% Fall to a different level - 8%
Accident Site	On collection route at back of truck - 39% On collection route at curb - 16% On collection route in/on vehicle - 14%	On collection route at back of truck - 48% On collection route at curb - 18% On collection route in/on vehicle - 14%	On collection route at back of truck - 44% On collection route in/on vehicle - 19% On collection route at curb - 18%
Nature of Injury	Sprain or strain - 37% Cut or puncture - 23% Bruise - 19%	Sprain or strain - 48% Bruise - 17% Cut or puncture - 9%	Sprain or strain - 43% Bruise - 16% Cut or puncture - 11%
Part of Body	Back - 18% Leg - 9% Arm - 7%	Back - 26% Multiple body parts - 9% Ankle - 7%	Back - 22% Multiple body parts - 14% Foot - 8%

PART II - CHARACTERISTICS OF ACCIDENTS

FIGURE 2-6 summarizes the frequency, days lost and costs of third quarter's OSHA recordable injuries by accident characteristics. Each of the following FIGURES covers a different characteristic of the accident:

- FIGURES 2-7A to 2-7C: Activity, e.g., lifting to dump container.
- FIGURES 2-8A to 2-8C: Accident Type, e.g., overexertion involving container.
- FIGURES 2-9A to 2-9C: Accident Site, e.g., on the collection route at the back of the vehicle.
- FIGURES 2-10A to 2-10C: Injury Type, e.g., cut or puncture.
- FIGURE 2-11: Part of Body, e.g., back.

FIGURE 2-7A

ALL USERS
ACTIVITIES RANKED FROM HIGHEST TO LOWEST
PERCENT OF OSHA RECORDABLE INJURIES

PORTING PERIOD: JULY - SEPTEMBER 1976

FINITIONS: OSHA RECORDABLE CASES INCLUDE MEDICAL TREATMENT
SES (I.E. NON-FATAL CASES WITHOUT LOST WORKDAYS), AND LOST WORKDAY,
RMANENT DISABILITY AND FATAL CASES. FIRST AID INJURIES ARE NOT INCLUDED.

STRUCTIONS: DETERMINE YOUR ORGANIZATION'S PROBLEM AREAS BY IDENTIFYING
E AREAS WITH THE HIGHEST PERCENTAGES.

ACTIVITY	OSHA RECORDABLE INJURIES NO.	%
FTING CONTAINER	120	13.17
FTING TO DUMP CONTAINER	104	11.42
MPING CONTAINER	98	10.76
TTING OFF EQUIP	71	7.79
ANDING OR WALKING	67	7.35
RRYING CONTAINER	62	6.81
FTING TO DUMP WASTE	53	5.82
DING ON EQUIP	51	5.60
SHING OR PULLING CONTAINER	38	4.17
TTING ON EQUIP	32	3.51
IVING EQUIP	21	2.31
ING REPETITIOUS WORK	18	1.98
FTING WASTE	16	1.76
ING OTHER TYPE OF ACTIVITY	14	1.54
CKING UP LOOSE WASTE	13	1.43
EARING WASTE W HANDTOOL	13	1.43
ERATING CONTROLS	12	1.32
ING NO ONE ACTIVITY	12	1.32
PAIRING EQUIP W HANDTOOL	8	0.88
ECKING EQUIP MALFNCTN	8	0.88
ENING EQUIP PT	6	0.66
RRYING WASTE	5	0.55
PTYING VEH	5	0.55
SHING EQUIP	5	0.55
IMMING SHRUBBERY	5	0.55
FUELING VEH OR ROUTINE MAINT	5	0.55
JSHING OR PULLING WASTE	4	0.44
SLODGING WASTE FROM CONT	4	0.44
OSING EQUIP PT	4	0.44
RRYING OBJECT	3	0.33
OKING OR UNHOOKING EQUIP	3	0.33
ING JANITORIAL WORK	3	0.33
JNNING	3	0.33
ING UNK ACTIVITY	3	0.33
SLODGING WASTE FROM VEH	2	0.22

OSHA RECORDABLE INJURIES

ACTIVITY	NO.	%
LIFTING VEH PART	2	0.22
LIFTING OBJECT	2	0.22
DUMPING WASTE	2	0.22
COMPACTING WASTE IN CONT	2	0.22
MOWING	2	0.22
PUSHING OR PULLING VEH PT	1	0.11
PUSHING OR PULLING OBJECT	1	0.11
SHAKING WHILE DUMPING CONT	1	0.11
CATCHING CONT	1	0.11
CATCHING WASTE	1	0.11
ARRANGING LOAD	1	0.11
COMPACTING WASTE IN VEH	1	0.11
WASHING CONT	1	0.11
DIRECTING VEH	1	0.11
UNLOADING WASTE	1	0.11
TOTAL	911	100.00

FIGURE 2-7B

ALL USERS
ACTIVITIES RANKED FROM HIGHEST TO LOWEST
PERCENT OF OSHA DAYS LOST

:PORTING PERIOD: JULY - SEPTEMBER 1976

:FINITIONS: A LOST DAYS CASE IS ONE IN WHICH THE EMPLOYEE INCURRED
IRKDAYS LOST AND/OR LIGHT DUTY DAYS DUE TO THE ACCIDENT.

ACTIVITY	OSHA DAYS LOST NO.	%	AVG DAYS LOST/ LOST DAYS CASE
:FTING CONTAINER	807	15.04	9.07
:FTING TO DUMP CONTAINER	779	14.52	10.82
JMPING CONTAINER	512	9.54	8.68
[DING ON EQUIP	437	8.14	15.07
ARRYING CONTAINER	427	7.96	10.67
:TTING OFF EQUIP	385	7.17	8.95
JSHING OR PULLING CONTAINER	330	6.15	11.79
TANDING OR WALKING	304	5.67	8.00
:TTING ON EQUIP	215	4.01	9.77
[FTING TO DUMP WASTE	185	3.45	7.71
JING REPETITIOUS WORK	145	2.70	10.36
JING OTHER TYPE OF ACTIVITY	105	1.96	11.67
RIVING EQUIP	87	1.62	6.69
[CKING UP LOOSE WASTE	71	1.32	8.87
JSHING OR PULLING WASTE	70	1.30	23.33
:PAIRING EQUIP W HANDTOOL	62	1.16	12.40
LOSING EQUIP PT	61	1.14	30.50
ARRYING WASTE	42	0.78	14.00
HECKING EQUIP MALFNCTN	42	0.78	7.00
RIMMING SHRUBBERY	38	0.71	9.50
DWING	34	0.63	17.00
IFTING OBJECT	29	0.54	14.50
LEARING WASTE W HANDTOOL	29	0.54	5.80
DOKING OR UNHOOKING EQUIP	19	0.35	19.00
IFTING WASTE	16	0.30	5.33
EFUELING VEH OR ROUTINE MAINT	14	0.26	7.00
OING NO ONE ACTIVITY	14	0.26	2.80
HAKING WHILE DUMPING CONT	13	0.24	13.00
PERATING CONTROLS	13	0.24	2.60
IFTING VEH PART	12	0.22	6.00
ISLODGING WASTE FROM VEH	11	0.20	5.50
ASHING EQUIP	11	0.20	2.75
USHING OR PULLING VEH PT	8	0.15	8.00
ATCHING CONT	8	0.15	8.00
OING JANITORIAL WORK	8	0.15	8.00
RRANGING LOAD	7	0.13	7.00
OMPACTING WASTE IN CONT	3	0.06	3.00
MPTYING VEH	3	0.06	1.50

OSHA DAYS LOST

ACTIVITY	NO.	%	AVG DAYS LOST DAYS
OPENING EQUIP PT	3	0.06	1.00
RUNNING	3	0.06	3.00
CARRYING OBJECT	1	0.02	1.00
CATCHING WASTE	1	0.02	1.00
COMPACTING WASTE IN VEH	1	0.02	1.00
WASHING CONT	1	0.02	1.00
TOTAL	5,366	100.00	9.58

FIGURE 2-7C

ALL USERS
ACTIVITIES RANKED FROM HIGHEST TO LOWEST
PERCENT OF DIRECT COSTS

ᴾORTING PERIOD: JULY - SEPTEMBER 1976

ᶠINITIONS: OSHA RECORDABLE CASES INCLUDE MEDICAL TREATMENT
ᵍES (I.E. NON-FATAL CASES WITHOUT LOST WORKDAYS), AND LOST WORKDAY,
ᴿMANENT DISABILITY AND FATAL CASES. FIRST AID INJURIES ARE NOT INCLUDED.
ᴿECT COSTS INCLUDE MEDICAL EXPENSES, WORKER'S COMPENSATION BENEFITS AND
ᵍE CONTINUATION BENEFITS (E.G., INJURY LEAVE) ONLY. INDIRECT COSTS
ᴱ NOT INCLUDED.

ᵀRUCTIONS: DETERMINE YOUR ORGANIZATION'S PROBLEM AREAS BY IDENTIFYING
ᴱ AREAS WITH THE HIGHEST PERCENTAGES.

ACTIVITY	DIRECT COSTS AMT.	%	AVG COSTS/ OSHA REC INJ
FTING CONTAINER	37,797	14.97	315
FTING TO DUMP CONTAINER	28,123	11.14	270
DING ON EQUIP	24,075	9.53	472
MPING CONTAINER	23,676	9.38	242
RRYING CONTAINER	21,817	8.64	352
ANDING OR WALKING	19,209	7.61	287
TTING OFF EQUIP	14,257	5.65	201
ING OTHER TYPE OF ACTIVITY	14,189	5.62	1,014
SHING OR PULLING CONTAINER	13,543	5.36	356
FTING TO DUMP WASTE	9,521	3.77	180
TTING ON EQUIP	9,479	3.75	296
IVING EQUIP	6,476	2.56	308
CKING UP LOOSE WASTE	2,998	1.19	231
PAIRING EQUIP W HANDTOOL	2,928	1.16	366
OSING EQUIP PT	2,653	1.05	663
ING REPETITIOUS WORK	2,313	0.92	128
ECKING EQUIP MALFNCTN	2,084	0.83	260
RRYING WASTE	1,580	0.63	316
FTING WASTE	1,518	0.60	95
EARING WASTE W HANDTOOL	1,422	0.56	109
IMMING SHRUBBERY	1,410	0.56	282
WING	1,186	0.47	593
ᴾERATING CONTROLS	1,053	0.42	88
AKING WHILE DUMPING CONT	1,029	0.41	1,029
ING NO ONE ACTIVITY	819	0.32	68
SHING OR PULLING WASTE	818	0.32	204
SLODGING WASTE FROM VEH	662	0.26	331
OKING OR UNHOOKING EQUIP	635	0.25	212
FTING VEH PART	575	0.23	287
FUELING VEH OR ROUTINE MAINT	559	0.22	112
SHING EQUIP	550	0.22	110
TCHING CONT	509	0.20	509
MPTYING VEH	454	0.18	91
FTING OBJECT	452	0.18	226

DIRECT COSTS

ACTIVITY	AMT.	%	AVG COSTS OSHA REC IN
DOING JANITORIAL WORK	336	0.13	112
OPENING EQUIP PT	304	0.12	51
ARRANGING LOAD	255	0.10	255
PUSHING OR PULLING VEH PT	205	0.08	205
CATCHING WASTE	165	0.07	165
CARRYING OBJECT	156	0.06	52
RUNNING	136	0.05	45
DISLODGING WASTE FROM CONT	106	0.04	26
PUSHING OR PULLING OBJECT	97	0.04	97
DUMPING WASTE	95	0.04	47
DOING UNK ACTIVITY	70	0.03	23
UNLOADING WASTE	60	0.02	60
WASHING CONT	56	0.02	56
COMPACTING WASTE IN VEH	50	0.02	50
COMPACTING WASTE IN CONT	36	0.01	18
DIRECTING VEH	12	0.00	12
TOTAL	252,508	100.00	277

FIGURE 2-8A

ALL USERS
ACCIDENT TYPES RANKED FROM HIGHEST TO LOWEST
PERCENT OF OSHA RECORDABLE INJURIES

ORTING PERIOD: JULY - SEPTEMBER 1976

INITIONS: OSHA RECORDABLE CASES INCLUDE MEDICAL TREATMENT
ES (I.E. NON-FATAL CASES WITHOUT LOST WORKDAYS), AND LOST WORKDAY,
MANENT DISABILITY AND FATAL CASES. FIRST AID INJURIES ARE NOT INCLUDED.

TRUCTIONS: DETERMINE YOUR ORGANIZATION'S PROBLEM AREAS BY IDENTIFYING
AREAS WITH THE HIGHEST PERCENTAGES.

ACCIDENT TYPE	OSHA RECORDABLE INJURIES NO.	%
EREXERTION INVOLVING CONT	155	17.01
RUCK BY WASTE	62	6.81
RUCK SELF WITH CONT BEING HANDLED	48	5.27
RUCK AGAINST VEH PART	42	4.61
IP ON SAME LEVEL	41	4.50
JGHT BETWEEN OBJECTS	36	3.95
HICLE ACCIDENT	34	3.73
SECT BITE	34	3.73
LL TO A DIFFERENT LEVEL	31	3.40
LL ON SAME LEVEL	31	3.40
DILY REACTION	30	3.29
IMAL BITE	23	2.52
H MOVEMENT INVOLVED ACCIDENT	22	2.41
RT BY HANDLING CONT	22	2.41
RT BY HANDLING WASTE	21	2.31
RTICLES IN EYE.	19	2.09
EREXERTION	18	1.98
EPPED ON SHARP WASTE	17	1.87
DILY REACTION IN CATCHING CONT	16	1.76
EREXERTION INVOLVING WASTE	16	1.76
EPPED ON SHARP OBJ	16	1.76
RUCK SELF WITH WASTE BEING HANDLED	14	1.54
NTACT WITH ALLERGENIC WASTE	13	1.43
LL AGAINST VEH PART	11	1.21
IP AND STRUCK AGAINST VEH PART	11	1.21
IP TO A DIFFERENT LEVEL	9	0.99
EREXERTION INVOLVING OBJ	9	0.99
RUCK BY VEH PART	8	0.88
RUCK BY OBJ	8	0.88
STE PARTICLES IN EYE	8	0.88
RUCK AGAINST WASTE	7	0.77
POSURE TO WEATHER EXTREMES	7	0.77
RUCK AGAINST OBJECT	6	0.66
EREXERTION INVOLVING VEH PART	6	0.66
HER ACCIDENT TYPE	6	0.66
RUCK BY CONTAINER	5	0.55
RUCK SELF WITH OBJ BEING HANDLED	5	0.55

OSHA RECORDABLE INJURIES

ACCIDENT TYPE	NO.	%
CONTACT WITH CAUSTIC OR TOXIC SUBSTANCE	5	0.55
CONTACT WITH HOT SUBSTANCE	5	0.55
STRUCK AGAINST CONTAINER	4	0.44
STRUCK SELF WITH VEH PT BEING HANDLED	3	0.33
HURT BY HANDLING OBJ	3	0.33
SLIP AND STRUCK AGAINST CONT	3	0.33
CONTACT WITH HOT OBJ	3	0.33
DEVELOPED INJURY OVER TIME	3	0.33
FALL AGAINST OBJ	2	0.22
FALL AGAINST CONT	2	0.22
CONTACT WITH CAUSTIC OR TOXIC WASTE	2	0.22
CONTACT WITH ALLERGENIC SUBSTANCE	2	0.22
CONTACT WITH HOT VEH PART	2	0.22
RESULT OF AGGRESSIVE ACT	2	0.22
UNKNOWN ACCIDENT TYPE	2	0.22
HURT BY HANDLING VEH PART	1	0.11
TOTAL	911	100.00

FIGURE 2-8B

ALL USERS
ACCIDENT TYPES RANKED FROM HIGHEST TO LOWEST
PERCENT OF OSHA DAYS LOST

ORTING PERIOD: JULY - SEPTEMBER 1976

INITIONS: OSHA RECORDABLE CASES INCLUDE MEDICAL TREATMENT
ES (I.E. NON-FATAL CASES WITHOUT LOST WORKDAYS), AND LOST WORKDAY,
MANENT DISABILITY AND FATAL CASES. FIRST AID INJURIES ARE NOT INCLUDED.

TRUCTIONS: DETERMINE YOUR ORGANIZATION'S PROBLEM AREAS BY IDENTIFYING
AREAS WITH THE HIGHEST PERCENTAGES.

ACCIDENT TYPE	OSHA DAYS LOST NO.	%	AVG DAYS LOST/ LOST DAYS CASE
:REXERTION INVOLVING CONT	1,359	25.33	10.30
.L TO A DIFFERENT LEVEL	390	7.27	16.25
IGHT BETWEEN OBJECTS	360	6.71	16.36
IICLE ACCIDENT	294	5.48	11.76
:P ON SAME LEVEL	267	4.98	8.34
I MOVEMENT INVOLVED ACCIDENT	239	4.45	14.06
)ILY REACTION	229	4.27	10.90
RUCK AGAINST VEH PART	203	3.78	7.25
RUCK SELF WITH CONT BEING HANDLED	198	3.69	8.61
:REXERTION	158	2.94	10.53
.L AGAINST VEH PART	156	2.91	17.33
)ILY REACTION IN CATCHING CONT	149	2.78	12.42
RUCK BY WASTE	146	2.72	5.03
:REXERTION INVOLVING WASTE	138	2.57	11.50
.L ON SAME LEVEL	132	2.46	8.80
IP TO A DIFFERENT LEVEL	90	1.68	12.86
:PPED ON SHARP WASTE	75	1.40	8.33
RT BY HANDLING CONT	72	1.34	5.14
NTACT WITH HOT OBJ	63	1.17	21.00
RUCK SELF WITH VEH PT BEING HANDLED	60	1.12	60.00
NTACT WITH ALLERGENIC WASTE	51	0.95	8.50
IP AND STRUCK AGAINST VEH PART	44	0.82	8.80
RUCK SELF WITH WASTE BEING HANDLED	37	0.69	5.29
:REXERTION INVOLVING VEH PART	37	0.69	9.25
:REXERTION INVOLVING OBJ	35	0.65	11.67
SECT BITE	33	0.61	3.67
IP AND STRUCK AGAINST CONT	29	0.54	9.67
RUCK BY VEH PART	26	0.48	6.50
RUCK AGAINST OBJECT	25	0.47	8.33
:PPED ON SHARP OBJ	24	0.45	4.00
RTICLES IN EYE	23	0.43	2.87
NTACT WITH CAUSTIC OR TOXIC WASTE	23	0.43	23.00
RT BY HANDLING WASTE	21	0.39	5.25
POSURE TO WEATHER EXTREMES	21	0.39	4.20
IMAL BITE	18	0.34	3.00
HER ACCIDENT TYPE	17	0.32	5.67

OSHA DAYS LOST

ACCIDENT TYPE	NO.	%	AVG DAYS LOST DAYS
STRUCK BY CONTAINER	16	0.30	4.00
WASTE PARTICLES IN EYE	16	0.30	5.33
UNKNOWN ACCIDENT TYPE	16	0.30	8.00
STRUCK AGAINST CONTAINER	12	0.22	6.00
HURT BY HANDLING OBJ	11	0.20	5.50
STRUCK BY OBJ	10	0.19	3.33
CONTACT WITH HOT VEH PART	10	0.19	10.00
CONTACT WITH HOT SUBSTANCE	10	0.19	2.50
CONTACT WITH CAUSTIC OR TOXIC SUBSTANCE	5	0.09	1.67
DEVELOPED INJURY OVER TIME	5	0.09	1.67
STRUCK AGAINST WASTE	3	0.06	1.50
FALL AGAINST OBJ	3	0.06	3.00
FALL AGAINST CONT	3	0.06	3.00
STRUCK SELF WITH OBJ BEING HANDLED	2	0.04	2.00
RESULT OF AGGRESSIVE ACT	2	0.04	2.00
TOTAL	5,366	100.00	9.58

FIGURE 2-8C

ALL USERS
ACCIDENT TYPES RANKED FROM HIGHEST TO LOWEST
PERCENT OF DIRECT COSTS

PORTING PERIOD: JULY - SEPTEMBER 1976

FINITIONS: OSHA RECORDABLE CASES INCLUDE MEDICAL TREATMENT
SES (I.E. NON-FATAL CASES WITHOUT LOST WORKDAYS), AND LOST WORKDAY,
RMANENT DISABILITY AND FATAL CASES. FIRST AID INJURIES ARE NOT INCLUDED.
RECT COSTS INCLUDE MEDICAL EXPENSES, WORKER'S COMPENSATION BENEFITS AND
GE CONTINUATION BENEFITS (E.G., INJURY LEAVE) ONLY. INDIRECT COSTS
E NOT INCLUDED.

STRUCTIONS: DETERMINE YOUR ORGANIZATION'S PROBLEM AREAS BY IDENTIFYING
E AREAS WITH THE HIGHEST PERCENTAGES.

ACCIDENT TYPE	DIRECT COSTS AMT.	%	AVG COSTS/ OSHA REC INJ
'EREXERTION INVOLVING CONT	59,277	23.48	382
UGHT BETWEEN OBJECTS	24,379	9.65	677
LL TO A DIFFERENT LEVEL	19,420	7.69	626
H MOVEMENT INVOLVED ACCIDENT	13,927	5.52	633
HICLE ACCIDENT	12,178	4.82	358
IP ON SAME LEVEL	11,780	4.67	287
RUCK AGAINST VEH PART	11,026	4.37	263
DILY REACTION	10,456	4.14	349
RUCK BY WASTE	9,929	3.93	160
DILY REACTION IN CATCHING CONT	7,742	3.07	484
RUCK SELF WITH CONT BEING HANDLED	7,360	2.91	153
EPPED ON SHARP WASTE	6,299	2.49	371
LL ON SAME LEVEL	5,789	2.29	187
EREXERTION INVOLVING WASTE	4,884	1.93	305
LL AGAINST VEH PART	4,334	1.72	394
IP TO A DIFFERENT LEVEL	4,237	1.68	471
JRT BY HANDLING CONT	3,013	1.19	137
RUCK BY VEH PART	2,806	1.11	351
NTACT WITH HOT OBJ	2,738	1.08	913
EREXERTION	2,693	1.07	150
SECT BITE	2,465	0.98	72
IP AND STRUCK AGAINST VEH PART	1,857	0.74	169
NTACT WITH ALLERGENIC WASTE	1,705	0.68	131
IP AND STRUCK AGAINST CONT	1,511	0.60	504
RUCK SELF WITH WASTE BEING HANDLED	1,450	0.57	104
EREXERTION INVOLVING VEH PART	1,445	0.57	241
EPPED ON SHARP OBJ	1,444	0.57	90
NKNOWN ACCIDENT TYPE	1,387	0.55	693
ASTE PARTICLES IN EYE	1,329	0.53	166
RTICLES IN EYE	1,314	0.52	69
XPOSURE TO WEATHER EXTREMES	1,241	0.49	177
NIMAL BITE	1,174	0.46	51
URT BY HANDLING WASTE	1,074	0.43	51

DIRECT COSTS

ACCIDENT TYPE	AMT.	%	AVG COSTS OSHA REC IN
CONTACT WITH CAUSTIC OR TOXIC WASTE	1,062	0.42	531
STRUCK AGAINST OBJECT	1,051	0.42	175
OVEREXERTION INVOLVING OBJ	961	0.38	107
STRUCK AGAINST CONTAINER	761	0.30	190
CONTACT WITH HOT SUBSTANCE	695	0.28	139
STRUCK BY CONTAINER	682	0.27	136
HURT BY HANDLING OBJ	568	0.22	189
STRUCK BY OBJ	494	0.20	62
CONTACT WITH CAUSTIC OR TOXIC SUBSTANCE	429	0.17	86
STRUCK SELF WITH VEH PT BEING HANDLED	369	0.15	123
STRUCK AGAINST WASTE	353	0.14	50
OTHER ACCIDENT TYPE	292	0.12	49
CONTACT WITH HOT VEH PART	250	0.10	125
STRUCK SELF WITH OBJ BEING HANDLED	236	0.09	47
DEVELOPED INJURY OVER TIME	190	0.08	63
FALL AGAINST OBJ	163	0.06	81
FALL AGAINST CONT	149	0.06	74
RESULT OF AGGRESSIVE ACT	67	0.03	33
HURT BY HANDLING VEH PART	39	0.02	39
CONTACT WITH ALLERGENIC SUBSTANCE	34	0.01	17
TOTAL	252,508	100.00	277

FIGURE 2-9A

ALL USERS
ACCIDENT SITES RANKED FROM HIGHEST TO LOWEST
PERCENT OF OSHA RECORDABLE INJURIES

RTING PERIOD: JULY - SEPTEMBER 1976

NITIONS: OSHA RECORDABLE CASES INCLUDE MEDICAL TREATMENT
S (I.E. NON-FATAL CASES WITHOUT LOST WORKDAYS), AND LOST WORKDAY,
ANENT DISABILITY AND FATAL CASES. FIRST AID INJURIES ARE NOT INCLUDED.

RUCTIONS: DETERMINE YOUR ORGANIZATION'S PROBLEM AREAS BY IDENTIFYING
AREAS WITH THE HIGHEST PERCENTAGES.

ACCIDENT SITE	OSHA RECORDABLE INJURIES NO.	%
COLLECTION ROUTE		
ST AT BACK OF TRUCK	263	28.87
ST AT CURB	111	12.18
ALLEY AT BACK OF TRUCK	88	9.66
CUSTOMER'S YD	73	8.01
STEP OF VEH	50	5.49
VEHICLE	33	3.62
ALLEY AT CURB	32	3.51
SIDE CAB OF VEH	29	3.18
CUSTOMER'S DRIVEWAY	24	2.63
MIDSTREET	17	1.87
RUNNING BOARD	13	1.43
SIDEWALK	7	0.77
TRUCK BED	5	0.55
MIDALLEY	4	0.44
ST AT FRONT OF TRUCK	2	0.22
ALLEY AT FRONT OF TRUCK	1	0.11
SUBTOTAL	782	85.84
ROUTE BETWEEN SITES		
NSIDE CAB	6	0.66
N TRUCK BED	2	0.22
N STEP OF VEH	1	0.11
SUBTOTAL	9	0.99
LANDFILL		
N YARD	11	1.21
EXT TO VEH AT DUMP SITE	9	0.99
N VEHICLE	8	0.88
EXT TO VEH	6	0.66
T DUMP SITE	4	0.44
NSIDE CAB OF VEH	3	0.33
N STEP OF VEH	2	0.22
NROUTE TO DUMP SITE	2	0.22
N OFFICE/GATEHOUSE	1	0.11
N SHOP/GARAGE	1	0.11
NSIDE CAB AT DUMP SITE	1	0.11
N TRUCK BED AT DUMP SITE	1	0.11
SUBTOTAL	49	5.38

ACCIDENT SITE	OSHA RECORDABLE INJURIES NO.	%
AT INCINERATOR		
IN PLANT	6	0.66
IN YARD	3	0.33
AT DUMPING FLOOR	2	0.22
INSIDE CAB OF VEH	1	0.11
IN OFFICE/GATEHOUSE	1	0.11
IN SHOP/GARAGE	1	0.11
ON VEHICLE AT DUMPING FLOOR	1	0.11
SUBTOTAL	16	1.76
AT TRANSFER STATION		
ON VEHICLE	1	0.11
NEXT TO VEHICLE	1	0.11
IN YARD	1	0.11
SUBTOTAL	3	0.33
AT RECYCLING STATION		
IN PLANT	1	0.11
SUBTOTAL	1	0.11
AT HEADQUARTERS		
IN YARD PARKING LOT	13	1.43
IN SHOP/GARAGE	8	0.88
ON VEHICLE	4	0.44
NEXT TO VEH	4	0.44
INSIDE CAB OF VEH	2	0.22
AT WASHRACK	2	0.22
ON STEP OF VEH	1	0.11
IN OFFICE	1	0.11
AT REFUELING STATION	1	0.11
SUBTOTAL	37	4.06
IN ROADWAY/FIELD		
SUBTOTAL	9	0.99
AT OTHER SITE		
AT UNKNOWN SITE	3	0.33
SUBTOTAL	5	0.55
TOTAL	911	100.00

FIGURE 2-9B PAGE 1

ALL USERS
ACCIDENT SITES RANKED FROM HIGHEST TO LOWEST
PERCENT OF OSHA DAYS LOST

ORTING PERIOD: JULY - SEPTEMBER 1976

'INITIONS: OSHA RECORDABLE CASES INCLUDE MEDICAL TREATMENT
;ES (I.E. NON-FATAL CASES WITHOUT LOST WORKDAYS), AND LOST WORKDAY,
:MANENT DISABILITY AND FATAL CASES. FIRST AID INJURIES ARE NOT INCLUDED.

;TRUCTIONS: DETERMINE YOUR ORGANIZATION'S PROBLEM AREAS BY IDENTIFYING
: AREAS WITH THE HIGHEST PERCENTAGES.

ACCIDENT SITE	OSHA DAYS LOST NO.	%	AVG DAYS LOST/ LOST DAYS CASE
COLLECTION ROUTE			
N ST AT BACK OF TRUCK	1,327	24.73	8.09
N ST AT CURB	778	14.50	9.97
N ALLEY AT BACK OF TRUCK	732	13.64	14.08
N STEP OF VEH	383	7.14	13.21
N CUSTOMER'S YD	290	5.40	7.44
N VEHICLE	225	4.19	11.84
N ALLEY AT CURB	164	3.06	10.25
N CUSTOMER'S DRIVEWAY	156	2.91	9.75
NSIDE CAB OF VEH	113	2.11	5.14
N MIDSTREET	79	1.47	7.18
N RUNNING BOARD	42	0.78	8.40
N MIDALLEY	37	0.69	18.50
N SIDEWALK	36	0.67	9.00
N ST AT FRONT OF TRUCK	10	0.19	10.00
N TRUCK BED	2	0.04	1.00
N ALLEY AT FRONT OF TRUCK	2	0.04	2.00
SUBTOTAL	4,543	84.66	9.41
IROUTE BETWEEN SITES			
)N STEP OF VEH	54	1.01	54.00
INSIDE CAB	32	0.60	6.40
SUBTOTAL	86	1.60	14.33
ſ LANDFILL			
IN YARD	61	1.14	10.17
ENROUTE TO DUMP SITE	52	0.97	26.00
)N VEHICLE	50	0.93	10.00
NEXT TO VEH AT DUMP SITE	33	0.61	8.25
NEXT TO VEH	19	0.35	6.33
)N TRUCK BED AT DUMP SITE	14	0.26	14.00
)N STEP OF VEH	13	0.24	13.00
AT DUMP SITE	10	0.19	10.00
INSIDE CAB AT DUMP SITE	6	0.11	6.00
IN OFFICE/GATEHOUSE	1	0.02	1.00

OSHA DAYS LOST

ACCIDENT SITE	NO.	%	AVG DAYS LOST DAYS
SUBTOTAL	259	4.83	10.36
AT INCINERATOR			
IN PLANT	23	0.43	5.75
AT DUMPING FLOOR	12	0.22	6.00
IN YARD	10	0.19	5.00
INSIDE CAB OF VEH	3	0.06	3.00
IN SHOP/GARAGE	2	0.04	2.00
SUBTOTAL	50	0.93	5.00
AT TRANSFER STATION			
IN YARD	3	0.06	3.00
SUBTOTAL	3	0.06	3.00
AT RECYCLING STATION			
IN PLANT	43	0.80	43.00
SUBTOTAL	43	0.80	43.00
AT HEADQUARTERS			
IN YARD PARKING LOT	147	2.74	16.33
IN SHOP/GARAGE	41	0.76	6.83
ON VEHICLE	32	0.60	16.00
INSIDE CAB OF VEH	22	0.41	11.00
NEXT TO VEH	20	0.37	10.00
IN OFFICE	10	0.19	10.00
ON STEP OF VEH	1	0.02	1.00
AT WASHRACK	1	0.02	1.00
SUBTOTAL	278	5.18	11.12
IN ROADWAY/FIELD			
SUBTOTAL	90	1.68	12.86
AT OTHER SITE			
AT UNKNOWN SITE	13	0.24	13.00
SUBTOTAL	14	0.26	7.00
TOTAL	5,366	100.00	9.58

FIGURE 2-9C

ALL USERS
ACCIDENT SITES RANKED FROM HIGHEST TO LOWEST
PERCENT OF DIRECT COSTS

ᴾORTING PERIOD: JULY - SEPTEMBER 1976

ᶠINITIONS: OSHA RECORDABLE CASES INCLUDE MEDICAL TREATMENT
ᵍES (I.E. NON-FATAL CASES WITHOUT LOST WORKDAYS), AND LOST WORKDAY,
ᴿMANENT DISABILITY AND FATAL CASES. FIRST AID INJURIES ARE NOT INCLUDED.
ᴿECT COSTS INCLUDE MEDICAL EXPENSES, WORKER'S COMPENSATION BENEFITS AND
ᵍE CONTINUATION BENEFITS (E.G., INJURY LEAVE) ONLY. INDIRECT COSTS
ᴱ NOT INCLUDED.

ᵍTRUCTIONS: DETERMINE YOUR ORGANIZATION'S PROBLEM AREAS BY IDENTIFYING
ᴱ AREAS WITH THE HIGHEST PERCENTAGES.

ACCIDENT SITE	DIRECT COSTS AMT.	%	AVG COSTS/ OSHA REC INJ
COLLECTION ROUTE			
N ST AT BACK OF TRUCK	54,196	21.46	206
N ST AT CURB	37,943	15.03	342
N ALLEY AT BACK OF TRUCK	33,887	13.42	385
N STEP OF VEH	20,631	8.17	413
N VEHICLE	17,967	7.12	544
N CUSTOMER'S YD	14,969	5.93	205
NSIDE CAB OF VEH	7,470	2.96	258
N ALLEY AT CURB	6,764	2.68	211
N CUSTOMER'S DRIVEWAY	6,221	2.46	259
N MIDSTREET	3,028	1.20	178
N SIDEWALK	2,217	0.88	317
N RUNNING BOARD	2,176	0.86	167
N TRUCK BED	257	0.10	51
N ST AT FRONT OF TRUCK	221	0.09	110
N MIDALLEY	154	0.06	38
N ALLEY AT FRONT OF TRUCK	106	0.04	106
SUBTOTAL	211,820	83.89	271
ᴵROUTE BETWEEN SITES			
NSIDE CAB	1,606	0.64	268
ᴵN STEP OF VEH	1,296	0.51	1,296
ᴵN TRUCK BED	89	0.04	44
SUBTOTAL	2,991	1.18	332
ᵀ LANDFILL			
ᴱNROUTE TO DUMP SITE	3,462	1.37	1,731
ᴵN YARD	2,682	1.06	244
ᴵN VEHICLE	2,379	0.94	297
ᴺEXT TO VEH	2,227	0.88	371
ᴺEXT TO VEH AT DUMP SITE	1,627	0.64	181
ᴵN TRUCK BED AT DUMP SITE	1,278	0.51	1,278

DIRECT COSTS

ACCIDENT SITE	AMT.	%	AVG COST OSHA REC I
ON STEP OF VEH	735	0.29	367
AT DUMP SITE	623	0.25	156
INSIDE CAB AT DUMP SITE	256	0.10	256
IN OFFICE/GATEHOUSE	79	0.03	79
INSIDE CAB OF VEH	77	0.03	26
IN SHOP/GARAGE	20	0.01	20
SUBTOTAL	15,445	6.12	315
AT INCINERATOR			
IN PLANT	2,002	0.79	334
INSIDE CAB OF VEH	447	0.18	447
AT DUMPING FLOOR	398	0.16	199
IN YARD	252	0.10	84
IN SHOP/GARAGE	82	0.03	82
ON VEHICLE AT DUMPING FLOOR	60	0.02	60
IN OFFICE/GATEHOUSE	20	0.01	20
SUBTOTAL	3,281	1.30	205
AT TRANSFER STATION			
IN YARD	168	0.07	168
ON VEHICLE	46	0.02	46
NEXT TO VEHICLE	20	0.01	20
SUBTOTAL	234	0.09	78
AT RECYCLING STATION			
IN PLANT	2,380	0.94	2,380
SUBTOTAL	2,380	0.94	2,380
AT HEADQUARTERS			
IN YARD PARKING LOT	6,762	2.68	520
IN SHOP/GARAGE	1,917	0.76	240
IN OFFICE	900	0.36	900
ON VEHICLE	845	0.33	211
NEXT TO VEH	814	0.32	203
INSIDE CAB OF VEH	757	0.30	378
AT WASHRACK	159	0.06	79
ON STEP OF VEH	142	0.06	142
AT REFUELING STATION	41	0.02	41
SUBTOTAL	12,586	4.98	340
IN ROADWAY/FIELD			
SUBTOTAL	3,086	1.22	343
AT OTHER SITE			
AT UNKNOWN SITE	557	0.22	186
SUBTOTAL	685	0.27	137
TOTAL	252,508	100.00	277

FIGURE 2-10A

ALL USERS
INJURY TYPES RANKED FROM HIGHEST TO LOWEST
PERCENT OF OSHA RECORDABLE INJURIES

PORTING PERIOD: JULY - SEPTEMBER 1976

FINITIONS: OSHA RECORDABLE CASES INCLUDE MEDICAL TREATMENT
SES (I.E. NON-FATAL CASES WITHOUT LOST WORKDAYS), AND LOST WORKDAY,
RMANENT DISABILITY AND FATAL CASES. FIRST AID INJURIES ARE NOT INCLUDED.

STRUCTIONS: DETERMINE YOUR ORGANIZATION'S PROBLEM AREAS BY IDENTIFYING
E AREAS WITH THE HIGHEST PERCENTAGES.

TYPE OF INJURY	OSHA RECORDABLE INJURIES NO.	%
'RAIN OR STRAIN	339	37.21
IT/PUNCTURE	206	22.61
:UISE	169	18.55
'ING	31	3.40
'E IRRITATION	30	3.29
:ACTURE	25	2.74
3RASIONS	18	1.98
:RMATITIS	16	1.76
JRN FROM HEAT	13	1.43
NKNOWN TYPE OF INJURY	10	1.10
JLTIPLE INJURIES	9	0.99
)ISONING OR ALLERGIC REACTION	8	0.88
HEMICAL BURN	7	0.77
:AT STROKE,EXHAUSTION OR CRAMPS	7	0.77
[SLOCATION	5	0.55
THER TYPE OF INJURY	4	0.44
3PHYXIATION OR DROWNING	3	0.33
MPUTATION	2	0.22
)NCUSSION	2	0.22
:RNIA	2	0.22
NFECTION	2	0.22
NFLAMMATION OF THE JOINTS	2	0.22
.ECTRIC SHOCK	1	0.11
)TAL	911	100.00

FIGURE 2-10B

ALL USERS
INJURY TYPES RANKED FROM HIGHEST TO LOWEST
PERCENT OF OSHA DAYS LOST

REPORTING PERIOD: JULY - SEPTEMBER 1976

DEFINITIONS: A LOST DAYS CASE IS ONE IN WHICH THE EMPLOYEE INCURRED WORKDAYS LOST AND/OR LIGHT DUTY DAYS DUE TO THE ACCIDENT.

TYPE OF INJURY	OSHA DAYS LOST NO.	%	AVG DAYS L LOST DAYS
SPRAIN OR STRAIN	2,601	48.47	9.89
BRUISE	922	17.18	8.70
CUT/PUNCTURE	493	9.19	5.87
FRACTURE	472	8.80	22.48
MULTIPLE INJURIES	207	3.86	34.50
DISLOCATION	127	2.37	25.40
BURN FROM HEAT	86	1.60	8.60
UNKNOWN TYPE OF INJURY	82	1.53	13.67
AMPUTATION	75	1.40	37.50
OTHER TYPE OF INJURY	59	1.10	19.67
EYE IRRITATION	39	0.73	3.25
DERMATITIS	37	0.69	4.62
HERNIA	37	0.69	18.50
STING	27	0.50	3.86
CHEMICAL BURN	27	0.50	6.75
POISONING OR ALLERGIC REACTION	27	0.50	6.75
HEAT STROKE,EXHAUSTION OR CRAMPS	21	0.39	4.20
ABRASIONS	14	0.26	2.00
INFLAMMATION OF THE JOINTS	6	0.11	3.00
CONCUSSION	5	0.09	2.50
INFECTION	2	0.04	2.00
TOTAL	5,366	100.00	9.58

FIGURE 2-10C

ALL USERS
INJURY TYPES RANKED FROM HIGHEST TO LOWEST
PERCENT OF DIRECT COSTS

RTING PERIOD: JULY - SEPTEMBER 1976

NITIONS: OSHA RECORDABLE CASES INCLUDE MEDICAL TREATMENT
S (I.E. NON-FATAL CASES WITHOUT LOST WORKDAYS), AND LOST WORKDAY,
ANENT DISABILITY AND FATAL CASES. FIRST AID INJURIES ARE NOT INCLUDED.
CT COSTS INCLUDE MEDICAL EXPENSES, WORKER'S COMPENSATION BENEFITS AND
CONTINUATION BENEFITS (E.G., INJURY LEAVE) ONLY. INDIRECT COSTS
NOT INCLUDED.

RUCTIONS: DETERMINE YOUR ORGANIZATION'S PROBLEM AREAS BY IDENTIFYING
AREAS WITH THE HIGHEST PERCENTAGES.

TYPE OF INJURY	DIRECT COSTS AMT.	%	AVG COSTS/ OSHA REC INJ
IN OR STRAIN	108,166	42.84	319
SE	41,336	16.37	245
PUNCTURE	28,705	11.37	139
TURE	22,263	8.82	891
IPLE INJURIES	19,405	7.68	2,156
OCATION	8,022	3.18	1,604
FROM HEAT	3,874	1.53	298
R TYPE OF INJURY	3,263	1.29	816
IRRITATION	2,799	1.11	93
OWN TYPE OF INJURY	2,305	0.91	230
G	2,248	0.89	73
IA	1,888	0.75	944
ICAL BURN	1,516	0.60	217
ATITIS	1,309	0.52	82
T STROKE,EXHAUSTION OR CRAMPS	1,241	0.49	177
ASIONS	1,151	0.46	64
SONING OR ALLERGIC REACTION	998	0.40	125
CUSSION	943	0.37	471
JTATION	648	0.26	324
AMMATION OF THE JOINTS	160	0.06	80
HYXIATION OR DROWNING	141	0.06	47
ECTION	103	0.04	51
CTRIC SHOCK	24	0.01	24
AL	252,508	100.00	277

FIGURE 2-11

ALL USERS
PARTS OF BODY INJURED RANKED FROM HIGHEST TO LOWEST PERCENT OF
OSHA RECORDABLE INJURIES, WORKDAYS LOST AND DIRECT COSTS

REPORTING PERIOD: JULY - SEPTEMBER 1976

DEFINITIONS: OSHA RECORDABLE CASES INCLUDE MEDICAL TREATMENT CASES (I.E. NON-FATAL CASES WITHOUT LOST WORKDAYS), AND LOST WORKDAY, PERMANENT DISABILITY AND FATAL CASES. FIRST AID INJURIES ARE NOT INCLUDED.
DIRECT COSTS INCLUDE MEDICAL EXPENSES, WORKER'S COMPENSATION BENEFITS AND WAGE CONTINUATION BENEFITS (E.G., INJURY LEAVE) ONLY. INDIRECT COSTS ARE NOT INCLUDED.

INSTRUCTIONS: DETERMINE YOUR ORGANIZATION'S PROBLEM AREAS BY IDENTIFYING THE AREAS WITH THE HIGHEST PERCENTAGES.

OSHA RECORDABLE INJURIES			WORKDAYS LOST				DIRECT COSTS			
PART OF BODY	OSHA REC INJ NO.	OSHA REC INJ %	PART OF BODY	WKDYS LOST NO.	WKDYS LOST %	AVG/LOST WKDY CASE	PART OF BODY	DIRECT COSTS AMT.	DIRECT COSTS %	AVG COSTS/ OSHA REC INJ
BACK	160	17.56	BACK	1,384	25.79	10.56	BACK	56,327	22.31	352
LEG	78	8.56	MULTIPLE BODY PARTS	461	8.59	18.44	MULTIPLE BODY PARTS	34,083	13.50	831
ARM	68	7.46	ANKLE	387	7.21	8.80	FOOT	20,976	8.31	368
EYES	63	6.92	HAND	375	6.99	13.39	SHOULDER	16,801	6.65	350
ANKLE	60	6.59	FOOT	367	6.84	10.79	HAND	16,128	6.39	375
FOOT	57	6.26	SHOULDER	336	6.26	9.88	KNEE	15,438	6.11	309
FINGERS	51	5.60	LEG	313	5.83	7.45	LEG	14,636	5.80	188
KNEE	50	5.49	KNEE	281	5.24	8.78	ANKLE	13,696	5.42	228
SHOULDER	48	5.27	CHEST	201	3.75	11.82	WRIST	8,619	3.41	319
HAND	43	4.72	ARM	192	3.58	7.68	ARM	6,892	2.73	101
MULTIPLE BODY PARTS	41	4.50	WRIST	192	3.58	11.29	FINGERS	6,719	2.66	132
WRIST	27	2.96	FINGERS	164	3.06	7.45	GROIN	6,594	2.61	388
CHEST	26	2.85	GROIN	121	2.25	11.00	CHEST	6,249	2.47	240
NECK	19	2.09	TOES	108	2.01	12.00	EYES	5,134	2.03	81
ELBOW	19	2.09	HIPS	99	1.84	19.80	HIPS	4,780	1.89	597
GROIN	17	1.87	NECK	83	1.55	5.93	NECK	3,754	1.49	198
TOES	14	1.54	EYES	68	1.27	2.72	ELBOW	3,388	1.34	178
INTERNAL ORGANS	11	1.21	ELBOW	52	0.97	5.20	TOES	3,199	1.27	228
FOREHEAD	8	0.88	THUMB	48	0.89	9.60	THUMB	2,258	0.89	323
ABDOMEN	8	0.88	ABDOMEN	42	0.78	7.00	SKULL	1,608	0.64	536
HIPS	8	0.88	SKULL	21	0.39	7.00	INTERNAL ORGANS	1,402	0.56	127
THUMB	7	0.77	INTERNAL ORGANS	21	0.39	4.20	ABDOMEN	931	0.37	116
CHEEK	5	0.55	TRUNK	18	0.34	6.00	TRUNK	922	0.37	307
MOUTH	4	0.44	CHEEK	8	0.15	8.00	FOREHEAD	772	0.31	96
EARS	4	0.44	FOREHEAD	8	0.15	2.00	MOUTH	262	0.10	65
SKULL	3	0.33	EARS	7	0.13	7.00	FACE	249	0.10	83
FACE	3	0.33	MOUTH	3	0.06	1.50	EARS	241	0.10	60
TRUNK	3	0.33	FACE	2	0.04	1.00	CHEEK	142	0.06	28
SCALP	2	0.22	OTHER BODY PART	2	0.04	2.00	SCALP	140	0.06	70
JAW	1	0.11	SCALP	1	0.02	1.00	OTHER BODY PART	69	0.03	69
NOSE	1	0.11	UNK BODY PART	1	0.02	1.00	NOSE	44	0.02	44
UNK BODY PART	1	0.11	TOTAL	5,366	100.00	9.58	UNK BODY PART	33	0.01	33
							JAW	23	0.01	23

PROPOSED RECOMMENDED SAFE WORK RULES FOR SOLID WASTE WORKERS

The following work rules were compiled from the data sent in from IRIS users. All work rules received from users were greatly appreciated, and any recommended improvements are welcome.

These work rules are intended only to be suggestions. They may not represent all aspects of the safety problem in the solid waste management industry and should be adapted to individual user's needs.

DRIVING

1. Use seat belts.

2. Drive slowly over bumpy roads, chuckholes or humps, especially if carrying passengers.

3. Watch out for low hanging branches or wires as well as other objects close to the path of vehicle. Alert men riding on rear steps of any of these approaching hazards by sounding horn and reducing speed.

4. Use four-way flashers while collecting.

5. Loaded vehicles handle differently and require additional caution when cornering and stopping.

6. Park as close to curb as possible to collect. Do not block traffic.

7. Do not move vehicle forward until both helpers indicate that they are securely standing on the steps.

8. Report any malfunctions promptly to the maintenance department.

9. If necessary to stop on an incline, set emergency brakes.

10. Always drive with extreme caution and reduced speed during poor weather, when roadways are slippery due to rain, ice or snow.

11. When braking on slippery roads, apply the brakes lightly with a pumping action.

12. Maintain interval of one truck length between you and vehicle ahead for each ten miles per hour of speed.

13. Drive in low gear on soft surfaces and going up or down steep hills.

RIDING

1. Do not operate the packer while riding on the step.

2. Do not ride on the hopper sill or in the hopper. Do not ride on other vehicle parts that are not designed to carry passengers (e.g., fenders, lift gates, running boards).

3. Only one person per step allowed.

4. Use proper stance with both feet on the step and both hands firmly on the holding bar.

5. Keep hands and feet away from the hopper.

6. Containers should not be picked up while riding on the truck.

7. Helpers should ride in cab if distance travelled is more than a couple of blocks, or if roadway is narrow.

8. Keep steps free from waste, grease, ice and snow.

9. Watch out for low hanging tree branches or other obstacles close to truck.

10. Do not give signal for truck to move until both you and your partner are safely set in position.

LIFTING

1. Size the weight by testing. Rock container with knee. Get help if container is overweight.

2. Watch for jagged edges and unbalanced loads.

3. Remove any hazardous objects extending from container, e.g., lumber, wire, fencing, palm fronds, etc. Lighten load where necessary by removing magazines or other heavy refuse.

4. In handling containers consider all of the following:

   a. Be sure of firm fo ting, with your feet spaced about shoulder width apart for side to side balance and one foot slightly forward of the other for front to rear balance.

   b. Take a firm grip on the top edge of the container or handle with one hand; tip the container, and grasp the bottom edge with the other hand.

   c. Keep your back straight. Bend your knees. Start the main lift with your feet, lower legs, and arm; follow through with your large upper leg muscles. Keep the load close to your body. Avoid twisting your back to move the load. When it is necessary to turn while lifting, take a step with the load to avoid twisting your back. The upper part of your leg may be used as an assist when boosting the weight into the hopper.

   d. Double or two-man lift should be used only when the shape or weight of the load make it necessary, because a double lift increases the hazards. When necessary to use a double lift, lift together on signal.

5. Waterproof or plastic bags should be handled with care:

   a. When lifting, keep the bags away from your body as much as possible.

   b. Watch for holes and protruding objects in the bags.

   c. Test the weight of the bags as there may be heavy objects hidden from view. In hot weather the bags may stretch and tear.

   d. Avoid placing your hands underneath the bags.

6. Be extra careful of your grip when handling wet containers.

7. Wear gloves and long-sleeved shirts. It is also suggested that you wear protective clothing such as chaps and aprons for your legs.

8. When handling brush or lumber, be careful of thorns and nails.

LOADING

1. Do not throw containers.

2. Coordinate loading at the back of the packer so that not more than one person is dumping at a time.

3. Wear eye protection.

4. Do not dump containers when packer is operating. Stand to side of hopper with head turned.

5. Do not overload hopper; pack load as soon as hopper is full.

6. Watch out for objects protruding from the hopper or falling out.

7. Place the container on the edge of the hopper and roll or shake as needed to empty.

8. When emptying containers, keep your fingers out of positions where they can be pinched between the container and the hopper.

9. Do not load the packer body above the recommended weight allowance.

10. Look both ways when walking from in back of truck into traffic.

MOUNTING/DISMOUNTING

1. Never get on or off the vehicle if the vehicle is still in motion.

2. Never jump on or off the vehicle.

3. When stepping on the vehicle, obtain a secure grip on the handholds, step firmly and shift the body weight evenly.

4. Keep steps free of waste, oil, ice and snow.

5. Open the cab door completely before mounting or dismounting.

6. Observe the surface you are dismounting onto for:

   a. Loose objects (e.g., rocks, waste on ground).

   b. Slippery substances (e.g., ice, oil, water).

   c. Change in levels (e.g., meter, drainage hole, curb, cracks in sidewalk, chuckhole).

7. Wear safety shoes.

OPERATING PACKING MECHANISM

1. Other helpers are made aware by agreed signal that operator is ready to operate the packer.

2. Other helpers are not at the back of the truck when the packer is operating.

3. Operator should wear eye protection.

4. Operator should turn head away from hopper.

5. If lever is located on the right side, use left hand to operate; if on left, use right hand.

6. Never rest hand on hopper rail while packer is operating.

7. Do not attempt to catch waste that is falling out of the hopper when blade is in motion.

8. Do not attempt to push waste that is falling out the back.

9. Avoid branches or wood that may be swinging around when the packer is in motion.

BACKING

1. Drivers should back out of traffic rather than backing into it. For example, back into dead end streets, and drive out.

2. Do not back up an incline.

3. In a one-man operation, driver should walk to rear of vehicle to see if area is clear; slowly back up, and blow horn; check both rear view mirrors while backing.

4. In a two-or-more man operation:

   a. Helper may not ride on step as truck is backing.

   b. Use helper to guide in backing.

   c. Helper should have clear view of ground over which truck is backing.

   d. Helper should use hand signals rather than voice or whistle.

   e. Helper should be located in a position that is visible directly to the driver or visible in one of the rear view mirrors.

   f. Helper should maintain eye contact with the driver.

   g. Where possible, helper should station himself at the point where the backing maneuver is to end.

   h. Helper should not walk backwards while directing vehicle in backing.

   i. Driver should not back up unless he also knows where additional helpers are located.

   j. Back up slowly and blow horn.

   k. If helper should disappear from view, stop the truck immediately and do not resume backing until he is again in view and in a position to signal properly.

DUMPING VEHICLE

1. Make sure truck is on level ground when raising back end to dump load, as truck could tip over.

2. Make sure no one else is standing near rear door.

3. Release excess pressure in packer body before opening by pulling the ejector blade as far forward toward the cab as possible.

4. Open tailgate with caution; stand clear of swing path of door when opening.

5. When dumping the load, stay clear of the back; do not at any time stand under the open tailgate.

6. Before moving vehicle from dump site, latches and turnbuckles must be secure.

7. Whenever it is necessary to clear blade of waste, use extreme caution. Use long object (e.g., wood), and at all times protect upper part of body by keeping it clear of tailgate.

8. Wear eye protection.

9. Allow at least distance of six feet between the next vehicle.

10. Helpers should only ride in the cab, not on the step, while at the landfill or transfer station.

IRIS

EXHIBIT 5

ACCIDENT TRENDS

IN THE SOLID WASTE MANAGEMENT INDUSTRY

CONTAINER HANDLING ACCIDENTS

QUARTER: OCTOBER 1 TO DECEMBER 31, 1976

DEVELOPED BY SAFETY SCIENCES, DIVISION OF WSA, INC.
FOR THE U.S. ENVIRONMENTAL PROTECTION AGENCY
OFFICE OF SOLID WASTE MANAGEMENT PROGRAMS
UNDER CONTRACT NO. 68-03-0231

safety sciences Division of WSA Inc., 11772 Sorrento Valley Road
San Diego, CA 92121 (714) 755-9359 & 452-1010

Accident Trends in the Solid Waste Management Industry is developed quarterly using data from IRIS (the Injury Reporting and Information System for Solid Waste Management). Accident Trends is designed to summarize and discuss the data from all IRIS users and to provide data and conclusions which affect the industry as a whole. A companion volume, the QSMR (Quarterly Safety Management Report), is developed individually for each IRIS user who reported injuries during the quarter. Each QSMR concentrates only on the injuries of the individual IRIS user for which it is prepared.

IRIS is currently made up of 84 users. All possible care is taken to insure data quality. The nature of the data and the reports, however, precludes complete accuracy. Not all cases are closed by the end of the quarter. These accidents continue to be monitored. Occasionally, full lost time and cost data is not available. Consequently, the totals for these categories may be underestimates. A concerted effort is made to correct the lost time and cost figures and improve IRIS collection methods. The recommendations and countermeasures presented are suggestions that must be evaluated in terms of individual user's needs.

The purpose of this and other IRIS publications is to disseminate new ideas and alternative methods in the solid waste field. IRIS serves as a clearinghouse in this regard, but does not promote or endorse any method or product. Implementation of QSMR suggestions should be done only after careful evaluation by each user and at each user's discretion.

ACCIDENT TRENDS

IN THE SOLID WASTE MANAGEMENT INDUSTRY

QUARTER: OCTOBER 1 TO DECEMBER 31, 1976

TABLE OF CONTENTS

		Page
INTRODUCTION		v
I.	DISCUSSION OF CONTAINER HANDLING ACCIDENTS AND PREVENTION METHODS	1-1
1.	Employee Training	1-1
1.1	Testing the Container	1-2
1.2	Proper Lifting Techniques	1-5
1.3	Proper Dumping Techniques	1-5
1.4	Proper Carrying Techniques	1-6
1.5	Training for Intermediate Containers	1-6
1.6	Team Lifting and Dumping	1-7
1.7	Proper Bulk Container Handling	1-7
2.	Protective Clothing	1-8
2.1	Gloves	1-10
2.2	Footwear	1-11
2.3	Eye Protection	1-12
2.4	Leg Protection	1-13
2.5	High Visibility Clothing	1-14
3.	Container Regulations	1-14
3.1	Container Weight Limit	1-14
3.2	Container Size Limit	1-20
3.3	Container Type	1-20
3.4	Container Condition	1-20
3.5	Waste Regulations	1-21
3.6	Lid Requirement	1-22
3.7	Container Location	1-22
3.8	Public Acceptance Campaign	1-23
3.9	Enforcement	1-23
3.10	Supervision on the Route	1-24

TABLE OF CONTENTS (Continued)

		Page
4.	Altering Operational Procedures	1-24
	4.1 Collection Methods	1-24
	4.2 Altering Safety Rules	1-27
	4.3 Employee Performance Records	1-27
	4.4 Redesigning Safety Program	1-27
II.	FOURTH QUARTER IRIS USER INDUSTRY-WIDE DATA . .	2-1

LIST OF FIGURES

		Page
FIGURE 1-1	Employee Training	1-3
FIGURE 1-2	Protective Clothing	1-9
FIGURE 1-3	Container Regulations	1-15
FIGURE 1-4	Container Regulations of IRIS Users	1-16
FIGURE 1-5	Altering Operational Procedures	1-26
FIGURE 1-6	Container Related Accidents - Preliminary Task/Hazard Analysis	1-29
FIGURE 1-7	Detailed Description of Lifting Container Accidents	1-37
FIGURE 1-8	Detailed Description of Dumping Container Accidents	1-48
FIGURE 1-9	Detailed Description of Lifting to Dump Container Accidents	1-59
FIGURE 1-10	Detailed Description of Carrying Container Accidents	1-69
FIGURE 1-11	Detailed Description of Pushing or Pulling Container Accidents	1-76
FIGURE 2-1	Description of Users by Operational Characteristics	2-4
FIGURE 2-2	Summary of Injuries by Frequency, Severity, and Costs	2-11
FIGURE 2-3	Comparison of Injury Rates and OSHA Days Lost for All Users	2-13
FIGURE 2-4	Comparison of Direct Costs by Reporting Period for All Users	2-16
FIGURE 2-5	Summary of Accidents Factors for Selected Accident Characteristics with Highest Percent of OSHA Recordable Injuries, Workdays Lost and Direct Costs	2-19

INTRODUCTION

This is the Accident Trends report for the fourth quarter of 1976 (October 1 to December 31). This report is divided into two sections, a discussion of the special feature topic, container handling accidents and their preventative measures and a summary of the data for the quarter. Section I includes a Preliminary Task/Hazards Analysis for container handling accidents. The discussion in Section I will encompass all container handling accidents since the instigation of IRIS in December 1975, but Section II relates only the rates and figures applicable to the fourth quarter of 1976.

Of the 81 IRIS users on-line fourth quarter, 80 users reported 1,547 injuries. Since the injury rates are based on man-hours of exposure, they reflect the various start-up periods of the IRIS users.

The time lost and direct costs shown on the FIGURES were provided as of May 1, the "closing date" for receiving data for the fourth quarter. Any cases where the time lost or direct cost data are incomplete are being monitored for updating.

SECTION I

DISCUSSION OF CONTAINER HANDLING ACCIDENTS AND PREVENTION METHODS

Since the solid waste industry deals almost solely in handling containers of waste, IRIS is examining these activities (e.g., lifting, dumping, carrying, etc.) that resulted in injury in the fourth quarter Accident Trends report. A condensed version of the following discussion is given in FIGURE 1-6, the Preliminary Task/Hazards Analysis for container handling accidents.

During the 13 months (December 1975 - December 1976) of operation of IRIS, container handling accidents resulted in 1,868 (50%) OSHA recordable injuries, 14,111 (47%) days lost and $638,481 (41%) in direct costs. FIGURES 1-7 through 1-11 included at the end of Section I provide detailed descriptions of the container handling accidents. Each FIGURE features a specific container handling task, and the FIGURES are ordered from the highest frequency of injury to the lowest. The descriptions are given in profile form (i.e., sentence) and includes the activity, accident type, injury type and part of body. The FIGURES also provide the total number of injuries, days lost and direct costs that correspond to each profile.

The following discussion is divided into four types of preventative measures that are components in reducing container handling accidents: employee training, protective clothing, container regulations and altering operational procedures.

1. EMPLOYEE TRAINING

Specific training in proper container handling should be provided as part of the newly hired employee's orientation program. Preliminary training should be provided at the office first rather than on the route and should be accompanied with visual demonstrations. Many users employ slides, films, charts or props (e.g., models of the spine) to reinforce their training. The newly hired employee should also "run through" the motions of lifting or dumping the container with the instructor critically evaluating his motions until his movements are corrected. Then the employee can be put on the route with an experienced employee as his team mate for a set number of days to test what

he learned. The team mate, of course, should be an employee who observes the prescribed container handling procedures.

Another area of concern in employee training is supervision on the route to ensure that what the employees learn is being used. Supervisors should take the attitude that they are responsible for the safety of their employees, and, therefore, should correct any unsafe acts observed by demonstrating the correct methods. Another reinforcement technique tested by some users is to take "candid" photos of the employees violating safe procedures and using them in the weekly safety tailgate sessions.

Specific areas of employee training for container handling accidents are given in FIGURE 1-1.

1.1 Testing the Container

Testing the container prior to lifting is a simple and quick operation that will prevent the employee from being "surprised" by a heavy container. Since it is believed that the unexpectedness of the occasional heavy container the employee encounters causes the employee to overexert himself, the employee should test the container for possible hidden rocks or water at the bottom. Once he has determined its weight, he can decide whether to leave the container if it is above the weight limit regulation or to ask the aid of a coworker if it is heavy but within the weight limit. In 21.5% of the container handling accidents, the container was indicated as heavy. These accidents resulted in 28% of the days lost and 28% of the direct costs.

Testing or "bumping" the container to determine its weight involves pushing the container away from the body, near the top, with the fingertips of the right hand, if right handed It only requires tipping the container approximately 30% from the vertical and observing its rocking motion as it steadies. With practice, experienced waste collectors can approximate the container's weight within 5 lbs. They can determine its weight by the amount of resistance to the push as well as the angle of the rocking motion. The heavier the container, the less it rocks.

FIGURE 1-1

CONTAINER HANDLING COUNTERMEASURES

EMPLOYEE TRAINING

1. TESTING THE CONTAINER
   a. Bump container with hand
   b. Observe rocking motion

2. PROPER LIFTING TECHNIQUES
   a. Avoid inclined or slippery surfaces
   b. Feet placement - shoulder length apart, one foot forward
   c. Firm grip
   d. Straight back
   e. Knees bent
   f. Slow steady lift
   g. Keep container close to body, elbows tucked
   h. Avoid jerking or twisting
   i. Do not throw

3. PROPER DUMPING TECHNIQUES
   a. Firm grip
   b. Avoid twisting
   c. Do not lift too high
   d. Bring down on edge of hopper
   e. Do not dump while hopper is operating
   f. Do not shake
   g. Do not overfill hopper

4. PROPER CARRYING TECHNIQUES
   a. Routing - avoid hazardous surfaces
   b. Keep container close to body
   c. Keep back straight

5. TRAINING FOR INTERMEDIATE CONTAINERS
   a. Proper carrying of tote barrels
   b. Pushing or pulling training for wheeled carts
   c. Proper lifting techniques
   d. Proper dumping techniques

6. TEAM LIFTING AND DUMPING
   a. One person supervises
   b. Done in unison on signal

FIGURE 1-1 (Continued)

7. PROPER BULK CONTAINER HANDLING
   a. Two man crew
   b. One man directs
   c. Push away rather than pull
   d. Keep hands and feet away from pinch points

8. CLEANING SPILLED WASTE

1.2 Proper Lifting Techniques

Currently, there is a controversy concerning utilizing deep knee bends in lifting due to possible knee injury as the result of frequent practice. The general consensus appears to be the rule of "if the container tests as being heavy, use the deep knee bends." Otherwise, use the method "most comfortable" for the individual. But the other proper lifting technique rules should be observed during any lifting procedure. They include keeping the feet shoulder length apart with one foot forward, maintaining a firm grip at all times and keeping the back straight with the elbows tucked. At no time should the employee throw the container, jerk the container up or twist his body while lifting.

Fifty-two percent (52%) of the container handling accidents occurred as the employee was lifting or lifting-to-dump a container. They resulted in 48% of the days lost and 50% of the direct costs.

1.3 Proper Dumping Techniques

Nearly a quarter of the container handling injuries occurred as the employee was dumping the container. This indicates a need for specific dumping training, which is not normally provided at an organization.

Proper dumping training includes maintaining a firm grip on the container, keeping the hands away from pinch points (e.g., caught between the container and the edge of the hopper resulted in 10% of the dumping accidents) and not dumping with the container held too high. Several users train their employees to bang the edge of the container, with the container upright, against the edge of the hopper. This shakes the waste out, thus not requiring the employee to hold and shake the container to loosen stuck waste. Shaking the container puts strain on the back. The container should not be held high when dumping as this will allow waste to spill out onto the employee and possibly cause overexertions when tilting the body away from the center of gravity. Employees should avoid twisting motions; rather than lifting and dumping from the curb, they should take a step closer to the hopper.

Other dumping hazards include objects being ejected from the hopper (5% of dumping accidents) and being struck by waste falling from the hopper or the container (8%). Employees should not be allowed to dump into an operating hopper. For

packers with hoppers that raise when operating, it means employees are dumping into a higher sill height, thus increasing overexertion accidents, if they attempt to dump into the hopper before it finishes cycling. For this reason, also, employees on side loader crews should be encouraged to use the loading step, thus reducing the sill height. Employees should not overfill the hopper. Overfilling the hopper increases the likelihood of objects falling from the hopper or bouncing out of the container onto the employee and objects being ejected as the packer cycles.

1.4 Proper Carrying Techniques

In 13% of the container handling accidents, the employee was carrying a container, and 40% of the carrying container accidents resulted in slips and falls.

The slips and falls that occurred as employees were carrying containers indicate routing as a major training area to concentrate. Employees can be trained to first "look over" the terrain for possible hazardous areas (e.g., oil spots, ice patches, wet grass, sprinkler heads, meter holes, objects on the ground, etc.) and plan their paths to avoid the hazards. In addition, they should keep the container close to their body with their elbows tucked and back straight.

1.5 Training for Intermediate Containers

Because intermediate containers were designed to carry more than one container full of waste, they are necessarily heavier and bulkier than regular household containers handled by curbside collectors. Therefore, their handling requires special training. For instance, with tote barrels, employees have one option of carrying the container on the shoulder. Without proper training, the employee is likely to drop the container or sustain a back strain maneuvering it onto his shoulder.

Intermediate containers were involved in 5% of the container handling accidents. But the numbers given for bulk containers and intermediate containers, although low, are significant due to their low hours of exposure.

1.6 Team Lifting and Dumping

IRIS encourages asking the aid of a coworker to help handle a particularly heavy or bulky container. However, IRIS also recognizes the problems associated with coordination between coworkers in a mutual effort. Therefore, IRIS encourages specific training in team lifting and dumping. In particular, the effort must be a united one such that both employees are lifting, pushing or dumping together. This requires one employee to give the command signals and both employees to obey the signals simultaneously. Team coordination training is particularly important for frequent two-man operations such as in handling bulky items and commercial bins.

1.7 Proper Bulk Container Handling

Half of the pushing or pulling container accidents involved bulk containers which were not handled with a coworker. Due to their massiveness many problems are encountered when maneuvering the bulk containers into dumping position (e.g., wheels stuck in pot hole, lost control of it on incline, rolling it over foot, caught between container and vehicle or wall). IRIS recommends that commercial bins be maneuvered by two-man crews. Of note is the increased severity and costs of the overexertions while pushing or pulling bulk containers. It resulted in 24% of the pushing or pulling container accidents, 57% of the days lost and 56% of the direct costs. As with any team operation, one of the employees should give the signals and both employees act in unison.

In 11% of the pushing/pulling container accidents, the employee was caught between the container and wall or vehicle, and in another 4% the employee rolled the bin over his foot. The employees should push rather than pull the bins, thus avoiding placing body parts in pinch points. They should push in increments in order to tilt their center of gravity as little as possible.

Another pinch point hazard is with the bulk container lids falling and catching the employee's hand (4%). The bins should not be moved if the lid is in an open position; the lid should be closed first, and hands should never be placed in pinch points.

To reduce slips and falls, employees should clean up spilled waste immediately. Each truck can be provided with a broom and dust pan to facilitate this.

A last item to consider in employee training is retraining. With experience, employees are not necessarily safer. Any training should be followed by periodic monitoring and reinforcement. Some users set a prescribed time span such as six months for mandatory safety retraining of their employees. Others require that if an employee has been given more than three written warnings for a specific safety violation, such as not lifting correctly, he has to re-enroll in that safety training class. Still others require that if an employee sustains a back injury while lifting, he has to be retrained in the correct lifting methods. Users can and do incorporate variations of the above methods as well as combinations of them in their safety programs.

2. PROTECTIVE CLOTHING

When choosing personal protective equipment for employees, several factors need to be considered:

1. The degree of protection it affords.
2. The ease and comfort with which it can be worn.
3. Acceptance by the employees. This includes employee awareness as to its necessity as well as policies for its frequency of use.
4. Supervision to insure that employees use and maintain the equipment properly.
5. Replacement when worn.

IRIS is presently taking a poll of the users on what types of protective clothing are being provided to the employees, their effectiveness, what users recommend, etc. This more detailed discussion of personal protective equipment will be published later in a special report.

In the following discussion of specific protective clothing, the protective clothing will be related to specific accident hazards, and cost effectiveness may, therefore, be reviewed.

FIGURE 1-2

CONTAINER HANDLING COUNTERMEASURES

PROTECTIVE CLOTHING

1. GLOVES
   a. Slip Resistant
   b. Durable

2. FOOTWEAR
   a. Slip Resistant
   b. Durable
   c. High Ankled
   d. Steel Toed

3. EYE PROTECTION
   a. Impact Resistance
   b. Side Protection
   c. Aeration

4. HIGH VISIBILITY CLOTHING
   a. Traffic Vest
   b. Bright Colored Clothes

2.1 Gloves

Obviously, cuts to the hands from sharp objects in the plastic bag, sharp waste falling from a container when dumping, and ragged edges on containers can be reduced through the use of gloves by employees. These accidents resulted in 2.8% of the direct costs ($18,031) for container handling accidents during this reporting period. However, it must be emphasized that indirect costs such as the injured employee's time, witness time, supervisory time, etc. is not taken into consideration.

Other accidents in which gloves could have been a contributing factor in reducing their incidence were: dropping containers while carrying, lifting, etc. and bruising fingers or hand when caught hand between container and vehicle while dumping. These accidents resulted in 2% of the direct costs ($24,105).

What users look for in a good pair of work gloves is:

1. Slip resistance to provide adequate grip on containers, especially during wet weather. What some users do to resolve this issue is to provide two pairs of gloves, one leather and one rubber, with the rubber pair to be used during wet weather. The leather pair, or normal wear pair, is usually made of canvas material with leather or suede inset for slip resistance.

2. Durability is better provided by the leather or suede. Users normally have a policy of replacing the gloves as soon as they are worn rather than on a regular schedule.

3. Protection to fingers and hands from sharp objects can be better provided with gloves that have wire mesh. However, the degree of protection must be weighed against whether heavier gloves will interfere in the employees' movements as well as the added cost. The length of the glove should also be considered. Gloves which expose the employees' wrists to cuts will not protect the employees during dumping operations where waste may puncture their wrists or fall into the gloves.

2.2 Footwear

Many users do not provide their employees with safety shoes but do provide discounts on certain brands of safety shoes, instead. This was their compromise to what they considered as exorbitant costs. Of course, their safety rules and regulations at least specify that the employees wear leather shoes with hard soles, and not allow canvas shoes or sandals. Punitive measures for violations for users include written reprimands and dismissals for the day. Other users feel that the degree of protection provided to their employees far outbalance the cost. Other side benefits of providing protective footwear is the increased morale of the employees, which can be a factor in reducing injury rates at an organization.

When considering purchasing footwear or providing discounts, the following safety shoe characteristics should be examined:

1. Slip resistance of the shoe is dependent not only on the material of the shoe sole but also on the pattern of grooves, notches, spikes, etc. Climatic conditions (e.g., snow, ice, rain) at an organization must be considered when deciding on the degree of slip resistance required. Several users provide more than one kind of safety shoes to allow for prolonged inclement weather, issuing shoes with higher slip resistance for the winter months. Users also provide a separate pair of rubber boots for wet weather. The problem with high slip resistance is that the shoes are adapted to a slippery surface and cannot be used in good weather. Otherwise, the employees' feet will "stick" to the pavement and cause increased knee problems. One user provides "ice creepers" or cleats that strap onto safety shoes to give better grip when walking on ice or snow.

   Slips and falls accounted for 12% of the OSHA recordable injuries, 14% of the days lost, and 14% of the direct costs as employees were handling containers. A further discussion of slips and falls is planned for the first quarter Accident Trends.

2. Durability with use, depending on the type of terrain an employee encounters on the route. To test durability, many users test the different safety shoes on the route with a certain section of the employees wearing a certain type.

3. Ankle protection is provided by high ankled safety shoes not only against sprained ankles but also against cuts to ankles from falling waste. There were 59 cases of sprained ankles, resulting in 324 days lost and $14,076 in direct costs.

4. Steel toed safety shoes are standard equipment in industries where the employees are handling heavy materials which may fall and crush their toes. In the solid waste industry, toes may even be amputated when an employee's foot gets caught by the hopper blade while riding. Steel toe impact resistance is addressed by ANSI (American National Standards Institute) standards covering safety shoes in the "American National Standard for Men's Safety-Toe Footwear," (ANSI Z41.1-1967, reaffirmed 1972).

2.3 Eye Protection

Eye injuries have the potential to be one of the most costly injuries in the solid waste industry. Fortunately, most eye injuries only result in scratches and irritation. The employees are frequently exposed to this injury when working near the hopper, where objects are being ejected from the operating packing mechanism. Eye protection is strongly recommended for these employees. In 2% of the OSHA recordable injuries, the employees were struck in the eye by an object ejected from the hopper. These accidents resulted in 1% days lost and 1% direct costs. Another 10% of the accidents were from waste or airborne particles getting into the employee's eye.

Many users recognize the need for this protection and provide safety glasses or goggles to their employees free of charge and replace them regularly. Some users, however, only provide safety prescription glasses.

Some guidelines to consider in choosing eye protection include:

1. Its impact resistance should be such that it cannot easily be shattered. Safety glass lens must be made of plastic rather than glass so that glass slivers cannot penetrate the eye upon the lens shattering.

2. Safety glasses can protect against objects being ejected from the hopper but glasses with side protection would, in addition, aid in the reduction of objects getting in the eye on windy days or in unpaved areas.

3. Aeration is important in gaining acceptance of goggles by the employees since a common complaint of goggles is that they mist up on hot days and become wet and slippery, particularly to employees unused to wearing glasses. Some users find that providing their employees with sweat bands reduces this problem. Certain types of goggles are provided with holes on the sides to allow some air flow. Another complaint that has not resolved by glasses design is that in arid climates, the glasses or goggles tend to have dust cling to them, which reduces visibility. Eye protection also tends to fog up on cold mornings or in cold weather. Eye glass suppliers do have anti-fogging sprays or rubbing cloths to alleviate this problem.

2.4 Leg Protection

Leg protection can reduce the cuts to the legs caused by sharp objects (mainly glass) protruding from plastic bags or from the ragged edges of cans. These accidents resulted in 1% of the days lost and 2% of the direct costs.

Two types of leg protection are in use: leather aprons and "chaps." However, employee acceptance to them is low because they are bulky, heavy and tend to be hot on warm days. For many users, these characteristics, along with the high costs, outweighed their effectiveness. Users instead provide their employees with pants or jumpsuits of a certain weight of material that affords some degree of protection against cuts.

2.5 High Visibility Clothing

Although traffic accidents involving private vehicles striking employees have not been frequent (3% injuries, 23% days lost and 2% direct costs), the potential for serious injury such as death is very apparent. Therefore, high visibility clothing for the employees is recommended, particularly if the employees are allowed to pick up from both sides of the street or are working during dawn or dusk hours.

Users utilize several types of high visibility clothing:

1. Orange traffic vests.

2. Bright colored (e.g., light blue, orange) jumpsuits.

3. Orange shirts.

Providing appealing as well as safety oriented uniforms have proven to be effective in increasing employee morale, also. Some users go a step further by embroidering the employee's name on his shirt or jumpsuit and providing summer as well as winter uniforms.

3. CONTAINER REGULATIONS

Container regulations covering size, weight, condition and location are standard at organizations. However, as to how specific the regulations are or what upper limits are placed, they vary greatly from organization to organization. FIGURE 1-4 details the container regulations in use by IRIS users.

Detailed container regulations are necessary as one of the components in making the work environment safer for the sanitation employee, especially since the employee's major task involves handling containers.

3.1 Container Weight Limit

As shown in FIGURE 1-4, the container weight limit of IRIS users (if there was one) ranged from a high of 130 lbs. to a low of 45 lbs. for a 32 gallon container. In 21.5% of the container handling accidents, the employee was lifting, carrying or dumping a "heavy" container. These accidents resulted in 28% of the days lost and 28% of the direct costs.

FIGURE 1-3

CONTAINER HANDLING COUNTERMEASURES

CONTAINER REGULATIONS

1. CONTAINER WEIGHT LIMIT
   a. Maximum weight for cans
   b. Maximum weight for plastic bags

2. CONTAINER SIZE LIMIT
   a. Maximum gallons
   b. Maximum dimensions

3. CONTAINER TYPE
   a. Not allowing oil drums
   b. Not allowing cardboard boxes
   c. Plastic bags must be of a certain thickness

4. CONTAINER CONDITION
   a. Replace if have ragged edges
   b. Replace if have missing handles
   c. Plastic bags must be tied
   d. Replace if have holes on bottom

5. WASTE REGULATIONS
   a. Bundle waste
   b. Bulky waste require special collection
   c. Handling of hazardous wastes

6. LID REQUIREMENT

7. CONTAINER LOCATION
   a. Level surface
   b. Public address announcements

8. PUBLIC ACCEPTANCE CAMPAIGN
   a. Leaflets
   b. Public address announcements

9. ENFORCEMENT
   a. Tagging and leaving containers violating regulations
   b. Citations for Repeated Violators

10. SUPERVISION ON THE ROUTE

FIGURE 1-4

CONTAINER REGULATIONS OF IRIS USERS

USER NO.	CONTAINER SIZE	WEIGHT LIMIT	LID REQUIRED	HANDLES REQUIRED
101	30 gal.	60	Y	Y
103	30 gal.	65	Y	Y
109	20-32 gal.	100	Y	Y
111	45 gal.	80	Y	N
113	30 gal.	60	N	N
115	30 gal.	60	Y	N
125	35 gal.	75	Y	N
133	32 gal.	70	Y	Y
140	30 gal.	100	Y	N
141	32 gal.	None	Y	Y
146	10-30 gal.	50	Y	Y
148	10-30 gal.	70	Y	Y
149	15 gal.	65	Y	Y
152	None	None	Y	Y
157	32 gal.	75	Y	Y
161	20 gal.	60	Y	Y
170	20-30 gal.	70	Y	N
171	20-32 gal.	100	Y	N
172	10-30 gal.	60	Y	Y
178	40 gal.	82	Y	N
179	30 gal.	50	N	Y
181	27 gal.	60	Y	Y
182	None	100	Y	N
183	32 gal.	75	Y	Y

FIGURE 1-4 (continued)

CONTAINER REGULATIONS
OF IRIS USERS

USER NO.	CONTAINER SIZE	WEIGHT LIMIT	LID REQUIRED	HANDLES REQUIRED
186	30 gal.	75	Y	Y
191	10-32 gal.	70	Y	Y
197	32 gal.	60	Y	Y
201	32 gal.	130	N	N
204	80 gal.	None	Y	N
207	31 gal.	65	Y	Y
210	20-40 gal.	50	Y	N
211	None	85	N	N
215	None	40	Y	N
217	30 gal.	75	Y	Y
221	20-45 gal.	80	Y	N
226	32 gal.	75	Y	Y
235	32 gal.	None	Y	Y
236	10-30 gal.	50	Y	Y
237	20-32 gal.	75	Y	N
242	30 gal.	100	Y	N
244	32 gal.	75	Y	Y
260	32 gal.	70	Y	N
261	20 gal.	75	Y	N
265	30 gal.	60	Y	Y
272	None	75	Y	N
275	32 gal.	50	Y	Y
283	32 gal.	45	Y	N
285	35 gal.	50	Y	N

FIGURE 1-4 (continued)

CONTAINER REGULATIONS
OF IRIS USERS

USER NO.	CONTAINER SIZE	WEIGHT LIMIT	LID REQUIRED	HANDLES REQUIRED
342	10-20 gal.	60	Y	N
343	30 gal.	70	Y	N
344	30 gal.	50	N	N
345	32 gal.	60	N	N
346	30 gal.	60	N	N
347	32 gal.	60	Y	N
348	45 gal.	50	N	N
349	32 gal.	60	Y	Y
350	None	50	Y	N
351	30-35 gal.	50	Y	Y
352	30 gal.	40	N	N
353	30 gal.	50	Y	Y
354	32 gal.	80	Y	N
355	30 gal.	None	Y	Y
357	20 gal.	70	Y	Y
358	30 gal.	50	Y	N
359	40 gal.	75	N	Y
360	25 gal.	50	Y	Y
362	20 gal.	50	Y	N
363	10-32 gal.	None	Y	Y

FIGURE 1-4 (continued)

CONTAINER REGULATIONS OF IRIS USERS

USER NO.	CONTAINER SIZE	WEIGHT LIMIT	LID REQUIRED	HANDLES REQUIRED
292	20-28" x 16-18"	75	Y	Y
295	30 gal.	50	Y	N
296	20-40 gal.	60	Y	N
299	32 gal.	50	N	Y
316	2 cu. ft.	None	Y	N
318	32 gal.	65	Y	N
323	20" x 35"	30	N	Y
324	20-30 gal.	75	N	N
325	32 gal.	100	Y	N
326	30 gal.	50	Y	Y
327	20 gal.	30	N	Y
328	20 gal.	60	Y	N
329	32 gal.	60	Y	Y
330	20-32 gal.	None	Y	N
331	32 gal.	60	Y	Y
333	30 gal.	75	Y	Y
334	10-25 gal.	50	Y	Y
335	None	None	Y	N
336	None	None	Y	N
337	None	100	Y	Y
338	None	100	Y	Y
339	None	100	Y	Y
340	27 gal.	70	Y	N
341	20-32 gal.	60	Y	Y

The weight of the containers not only is a contributing factor to overexertion accidents but also to slips and falls when carrying and strains that develop over the course of the day (not included in calculations).

Several users have also realized that lower weight limits should be set for plastic bags as opposed to galvanized or plastic cans. They set a 60 lb. weight limit for plastic bags. Problems encountered with plastic bags include the bags tearing during hot weather or when something extra heavy is at the bottom and the temptation on the employee's part to throw them.

3.2 Container Size Limit

The size allowed for cans and cardboard boxes are related both to how much waste a householder can pack in (weight) and to how awkward it will be for the employees to handle. The average size limit for plastic or metal cans among IRIS users was 30-32 gallons.

Users that allow backyard collection with the use of intermediate containers need to examine their practice with these hazards in mind since intermediate containers are approximately twice the size of a customer's container, and thus twice the weight.

3.3 Container Type

The type of container which is acceptable for pick up should be specified in the container regulations in order to rub out unsafe containers such as oil drums which are heavy, bulky and without proper grip edges. Many users also do not allow cardboard boxes to be used as a receptacle. Problems encountered with cardboard boxes include the box falling apart in wet weather, glass protruding from the sides, waste protruding from the top, and staples protruding. If cardboard boxes are allowed, the maximum accepted dimensions should be specified. Plastic bags should be of a minimum thickness. This not only reduces the number of injuries due to the bags tearing but also better prevents objects from protruding. The Decision-Makers Guide in Solid Waste Management developed by the U.S. Environmental Protection Agency recommends a change to the National Sanitation Foundation standards on plastic bag minimum thickness from 1.5 to 2.0 mils.

3.4 Container Condition

An organization can also have regulations concerning the condition of the container. For instance, many IRIS users' container regulations detail that containers with un-

safe conditions (e.g., ragged edges, missing handles, holes on the bottom, untied plastic bags, waste protruding) will not be dumped. These conditions have to be corrected by replacing the unsafe container or by obeying the regulations.

One organization, upon examining their injury record, made the determination that they need not require handles to be on containers. Their injury record revealed that they had very costly injuries when handles broke as employees were lifting or dumping containers, resulting in back strains. Therefore, they decided to instruct their employees not to maneuver the containers by the handles. Each organization should examine their injury records for similar trends.

3.5 Waste Regulations

Wastes such as brush and furniture and appliances which cannot be containerized require separate regulations. Many users require that brush be bundled, which will facilitate its pickup by the regular collection crews or by a special brush collection crew that comes by more infrequently. Furniture and appliances, however, usually require special handling, and many users require that customers call up, requesting this service. The bulky item crew will then go out and pick the item up, sometimes charging a fee. Other cities combine brush and bulky item collection, while some will allow customers to put anything out.

The National Solid Waste Management Association developed a preliminary draft of the "Recommended Draft Guidelines for Householders in disposing of some difficult to handle wastes on October 31, 1975:

Discarded Item	Recommended Method
• Aerosols	It is recommended that the instructions on the container be explicitly followed; for example, "Do Not Puncture", "Do Not Incinerate", or whatever is noted. Aerosols in addition to re-capped alcoholic beverage and other bottles become a potential explosion hazard.
• Broken Glass	Sweep with hand brush and dust pan, collect in paper sack, and deposit with trash. Wet paper towel to collect small slivers.
• Cleaning and Washing Products	Flush down toilet or drain.
• Gasoline	Call fire department or solid waste disposal facility for advice.

Discarded Item (continued)	Recommended Method (continued)
• Hypodermic Needles	Dispose of in separate, specially marked boxes or containers.
• Liquids	When in small quantities liquids can usually be disposed of by flushing them down the toilet or sink drain. For householders with septic tanks and tile fields and when disposing of more than one-half gallon, it might be best to consult the local solid wastes collection and disposal organization or fire department for advice.
• Razor Blades	Insert into slot on container for razor blades. Otherwise wrap in several layers of facial or toilet tissue and dispose with other solid waste from household.

3.6 Lid Requirement

Almost all users required lids to be on containers (FIGURE 1-4). The reasons behind this requirement are:

1. Lids will keep rain water or snow from entering the containers, thus keeping containers from getting overly heavy.

2. Lids keep insects and rodents out of the waste.

3. Lids can be used by the employees to compact down protruding waste, thus avoiding the hazard of cutting their hands on sharp waste.

3.7 Container Location

Container location regulations include both the accessibility of the container and the surface conditions of its location. For instance, surface conditions can specify that the containers be located on a level surface. Slips and falls occur more frequently on inclined surfaces which become even more hazardous when the surfaces are wet, icy, snow covered or oily.

A level surface requirement is especially important for bulk containers which will be difficult to control when the container has a tendency to roll. Accidents such as straining backs when attempting to catch the bulk container and getting hands caught between the container and wall can be reduced. The surface should also not contain slippery material, such as loose gravel.

The containers must be accessible. This means that in backyard collection, regulations can include that the containers cannot be inside fenced yards with loose dogs or behind locked gates. Neither should the containers be up a flight of stairs or down in the basement. Many users have also outlawed recessed containers, which have resulted in back strains.

Another container location regulation is the distance the container is from the street, whether the collection is curbside, alley or backyard. Setting a maximum distance minimizes how far the collector has to walk or carry.

3.8 Public Acceptance Campaign

To instigate an effective change in the container regulations, they must be accompanied by a comprehensive public acceptance campaign. Most users, when a customer starts collection service, provide the customer with a leaflet or brochure on the rules and regulations. Giving reasons for why the regulations were deemed necessary (e.g., reducing overexertion injuries with low weight limit, protruding brush from containers can get in an employee's eye, etc.) will make them more understandable and acceptable.

A separate leaflet should be developed to announce a change to a regulation, also with the reasoning behind it (e.g., changing from backyard to curbside to reduce operating costs and therefore reduce fees to customers). Any major changes in collection or container regulations should also be announced through other media such as radio, television, and local newspapers. Container rules and regulations that do not gain public acceptance are useless.

3.9 Enforcement

To be effective, container regulations must also be enforced, and enforcement details should be described in handouts and public address announcements.

Many users simply do not pick up containers or waste that are in violation. However, to curb customer protests, they tag the containers with the reasons they were left checked. Some users utilize a color-coded system of tags denoting how many times the same violation has occurred, with the third time being the last time before pick up is discontinued. The users also have the foreman of the area discuss violations with the customers, to lessen the harshness as well as to clarify the violations.

Some users go as far as to give out citations to serious repeat offenders, levying a fine. However, what they have found problems with is the slowness of their judicial system which tended to negate the citation's effectiveness.

Enforcement is another means of insuring a safer work environment for the sanitation employee. A tough enforcement program boosts employee morale since they realize that their safety is important to their employer.

3.10 Supervision on the Route

The employees while working should feel the influence of their supervisor. Their immediate supervisor can and should be made responsible for the safety of their employees. Supervision of the enforcement of container regulations includes not allowing employees to pick up containers which are in violation (e.g. have ragged edges, oil drums which are not allowed, etc.). The supervisor should project the image of principally having the welfare of his employees on his mind.

4. ALTERING OPERATIONAL PROCEDURES

After reviewing the injury performance record at an organization, management decisions to modify or alter the existing procedures should be made with reducing injuries and their corresponding high costs in mind. Accidents which are frequent with high costs(e.g. overexertions) as well as accidents that are infrequent with high costs (e.g. amputations, vehicle accidents) must be weighed against the projected costs of effecting the change. Many users project eventual return on their initial investment as far as five or ten years in the future.

4.1 Collection Methods

The following is a graduated listing of improvements to a collection system. A particular organization can be located at one or more steps (if they are phasing in a new system):

1. If backyard collection,provide intermediate containers. Reduces collection time and exposure to slips and falls (average cost per slip or fall injury was $583). Preliminary

IRIS analysis indicates reduced rates for slips and falls for backyard collection with tubs or carts vs without:

		OSHA Incidence Rate
Backyard without intermediate container	-	31
Backyard with tub	-	18
Backyard with wheeled cart	-	13

2. Reduce size of intermediate containers. Reduces weight and bulkiness in handling intermediate containers, particularly tote barrels.

3. Provide wheeled carts instead of tote barrels. Reduces carrying accidents (e.g. slips and falls, overexertions).

4. Change from backyard to curbside collection. Reduces incidence of slips and falls:

		OSHA Incidence Rate
Curbside and alley collection	-	13
Backyard collection	-	17

5. Change from task to fixed hour system or modified task system (e.g. crews in section can come in when all crews in section have finished). Reduction in injury rates (see IRIS News, August issue).

6. Change from curbside to semi-mechanical collection (provide special wheeled carts to customers, adapt equipment). Reduces exposure to overexertion accidents (average cost per overexertion injury was $596).

7. Change from semi-mechanical or curbside collection to mechanical collection (provide special containers, adapt or buy new equipment, reduce crew size). Virtually eliminates container handling (half of all accidents). Preliminary IRIS analysis substantiates this:

		OSHA Incidence Rate
Mechanical collection	-	29
Curbside or alley collection	-	59
Backyard collection	-	94

FIGURE 1-5

CONTAINER HANDLING COUNTERMEASURES

ALTERING OPERATIONAL PROCEDURES

1. COLLECTION METHODS

   a. If backyard collection without intermediate containers, provide intermediate containers.

   b. Reduce size of intermediate containers.

   c. Provide wheeled carts instead of tote barrels.

   d. Change from backyard to curbside collection.

   e. Change from task to fixed hour system or modified task system.

   f. Change from curbside to semi-mechanical collection.

   g. Change from semi-mechanical or curbside collection to mechanical collection.

2. ALTERING SAFETY RULES

   a. Requiring two man operation in handling bulk containers.

   b. Collect from one side of street at a time.

3. EMPLOYEE PERFORMANCE RECORDS

   a. Safety rule violations.

   b. Training given.

   c. Injury record - mandatory retraining.

   d. Periodic retraining.

   e. Pre-employment physical.

4. REDESIGNING SAFETY PROGRAM

   a. Determining need.

   b. Monitoring progress.

4.2 Altering Safety Rules

Altering safety rules can include requiring a two man operation for the handling of bulk containers (an average bulk container handling accident costs $1,191) and having employees only collect from one side of the street at a time (an average struck by vehicle accident costs $1,549).

4.3 Employee Performance Records

Many users that have active safety departments have altered their personnel folders to include employee performance records (e.g. safety rule violations, absenteeism, training given, injury record, etc.) or set up separate filing systems. They feel that examinations of employees' employment history can give better insight into the injury causal factors as well as allowing the safety department to identify and correct problems more effectively.

Guidelines for effective corrective measure, however, have to be developed also. For instance, employees who have received five written safety rule violations (e.g. not wearing safety shoes, collecting from other side of street, jamming safety controls, etc.) can be suspended from work for a set number of days without pay or dismissed.

What types of training and the dates an employee received them should be kept track of in order to instigate a thorough training and retraining program. Once an employee receives a specific injury such as overexertion while lifting, he can be retrained for correct lifting procedures. However, this program should not replace a periodic retraining program aimed at correcting the employee who has slipped back into bad habits. This program is a long-termed and detailed program that is done in-house.

Many users also require pre-employment physicals (including back x-rays) that may show a previous back injury or indicate congenital back problems. For instance, once these back problems have been identified, these employees may be given jobs that would reduce strain to their backs, or they may be "targeted" for intensive overexertion training.

4.4 Redesigning Safety Program

The elements of a dynamic safety program include:

1. Determining need by examining injury records. Comparisons with previous time periods and other organizations with similar operations.

2. Effecting changes can include altering operational procedures or safety rules once a problem has been identified.

3. Monitoring progress over time is necessary to determine the effectiveness of any change. This is accomplished through the monitoring of injuries.

CONTAINER RELATED ACCIDENTS *

PRELIMINARY TASK/HAZARD ANALYSIS

TASK			HAZARDS			POSSIBLE COUNTERMEASURES			
Percent of Total			Percent of Task						
% No. Inj.	% Days Lost	% Direct Costs	% No. Inj.	% Days Lost	% Direct Costs	EMPLOYEE TRAINING	PROTECTIVE CLOTHING	CONTAINER REGULATIONS	OPERATIONAL CHANGES
1. LIFTING CONTAINER			a. Overexertion			Proper lifting techniques			Change to mechanical or semi-mechanical collection
14%	14%	13%	65%	67%	70%				
% of Cont. Accidents			(1) Heavy Container**			Test weight. Tag and leave heavy containers Ask aid of coworker. Train on proper lifting techniques and team lifting.		Container weight limits Public acceptance program.	Same as above.
29%	29%	32%	49%	54%	54%				
			(2) Large Container (tote barrel, cart, etc.)**			Do not overfill intermediate container. If heavy, obtain aid. Train on proper lifting techniques and team lifting.		Container size limits.	Change from backyard to curbside or to mechanical or semi-mechanical collection
			11%	10%	10%				
			(3) Interaction**			Team lifting coordination			Change to mechanical or semi-mechanical collection.
			2%	3%	2%				
			b. Slipped or fell on wet, icy, or oily surface			Proper foot placement.	Slip resistant, high ankled safety shoes.		Same as above.
			3%	2%	2%				
			c. Cut hand on rough edges of cans or objects protruding from container				Gloves	Not allow containers with ragged edges. Require plastic bags to be of a certain thickness.	Same as above.
			8%	15%	9%				

* IRIS reporting period was December 1975 to December 1976. It includes 3,763 OSHA recordable injuries, 30,258 days lost and $1,563,888 in direct costs. Of these figures, 1,868 OSHA recordable injuries, 14,111 days lost and $638,481 in direct costs were incurred as employees were handling containers

** Overlapping numbers

CONTAINER RELATED ACCIDENTS

PRELIMINARY TASK/HAZARD ANALYSIS

TASK				HAZARDS				POSSIBLE COUNTERMEASURES			
	Percent of Total				Percent of Task						
	% No. Inj.	% Days Lost	% Direct Costs		% No. Inj.	% Days Lost	% Direct Costs	EMPLOYEE TRAINING	PROTECTIVE CLOTHING	CONTAINER REGULATIONS	OPERATIONAL CHANGES
1. LIFTING CONTAINER continued				d. Struck self with container or objects protruding from plastic bags	6%	5%	6%	Proper lifting techniques.	Leather apron or chaps to protect legs.	Require separate handling of glass and other sharp wastes.	Change to mechanical or semi-mechanical collection.
				e. Dropped can on foot	2%	1%	2%	Proper lifting techniques.	Steel-toed safety shoes. Slip resistant gloves.		Same as above.
2. DUMPING CONTAINER				a. Overexertion	23%	41%	43%	Proper dumping technique.			Same as above.
	11%	9%	8%								
	% of Cont. Accidents			(1) Heavy Container**	10%	14%	14%	Proper dumping technique.		Container weight limits.	Same as above.
	23%	19%	18%	(2) Large Container**	4%	5%	6%	Do not overfill intermediate containers.		Container size limits.	Same as above.
				b. Object in eye (not ejected)	15%	1%	4%	Avert head while dumping.	Eye protection.		
				c. Caught hand between container and vehicle	10%	11%	7%	Proper dumping technique.	Gloves.		Same as above.
				d. Struck by waste falling from container or hopper	8%	8%	9%	Do not overfill hopper. Do not raise container too high.	Gloves. Safety shoes.		Same as above.

**Overlapping numbers

CONTAINER RELATED ACCIDENTS

PRELIMINARY TASK/HAZARD ANALYSIS

TASK				HAZARDS				POSSIBLE COUNTERMEASURES			
	Percent of Total				Percent of Task						
	% No. Inj.	% Days Lost	% Direct Costs		% No. Inj.	% Days Lost	% Direct Costs	EMPLOYEE TRAINING	PROTECTIVE CLOTHING	CONTAINER REGULATIONS	OPERATIONAL CHANGES
2. DUMPING CONTAINER continued				e. Struck against vehicle	7%	4%	5%	Proper dumping technique.			Change to mechanical or semi-mechanical collection.
				f. Struck by waste ejected from hopper	5%	1%	2%	Not being at back of truck while hopper is operating.	Eye protection.		
				g. Fell or slipped on wet, icy or oily surface	3%	3%	4%	Proper dumping technique.	Slip-resistant, high ankled safety shoes.		Same as above.
				h. Struck by container handled by coworker	2%	<1%	<1%	One employee dumps at a time.			Same as above.
				i. Hurt hand on protruding waste or rough edges of container	2%	<1%	<1%		Gloves.	Container condition regulations for rough edges. Separate handling of glass and other sharp waste.	Same as above.
				j. Struck by vehicle	2%	5%	5%	Do not overfill truck.			Same as above.
				k. Dropped container on foot	1%	2%	2%	Maintain firm grip on container.	Steel toed safety shoes. Slip resistant gloves.		Same as above.

CONTAINER RELATED ACCIDENTS

PRELIMINARY TASK/HAZARD ANALYSIS

TASK				HAZARDS				POSSIBLE COUNTERMEASURES			
	Percent of Total				Percent of Task						
	% No. Inj.	% Days Lost	% Direct Costs		% No. Inj.	% Days Lost	% Direct Costs	EMPLOYEE TRAINING	PROTECTIVE CLOTHING	CONTAINER REGULATIONS	OPERATIONAL CHANGES
3. LIFTING TO DUMP CONTAINER	10%	10%	8%	a. Overexertion while handling heavy container	24%	40%	35%	Test weight prior to lifting. Tag and leave heavy containers. Train on proper lifting techniques. Obtain aid of coworker if heavy or awkward.		Container weight limits. Public acceptance campaign.	Change to mechanical or semi-mechanical collection.
% of Cont. Accidents	20%	21%	19%								
				b. Overexertion while handling large container	3%	1%	1%	Do not overfill intermediate container. If heavy, obtain aid. Train on proper lifting techniques and team lifting.		Container size limits.	Change from backyard to curbside or to mechanical or semi-mechanical collection.
				c. Overexertion while handling multiple containers.	<1%	6%	4%	Not allowing.			Change to mechanical or semi-mechanical collection.
				d. Cut leg with glass or hypodermic needle protruding from plastic bag	11%	4%	5%	Not throwing plastic bags.	Leather apron or chaps to protect legs.	Require separate handling of glass and other sharp wastes.	Same as above.
				e. Struck against vehicle	6%	5%	6%	Proper lifting techniques.			Same as above.
				f. Cut hand on glass in plastic bag	6%	2%	2%		Gloves.	Same as above.	Same as above.

CONTAINER RELATED ACCIDENTS

PRELIMINARY TASK/HAZARD ANALYSIS

TASK				HAZARDS				POSSIBLE COUNTERMEASURES			
	Percent of Total				Percent of Task						
	% No. Inj.	% Days Lost	% Direct Costs		% No. Inj.	% Days Lost	% Direct Costs	EMPLOYEE TRAINING	PROTECTIVE CLOTHING	CONTAINER REGULATIONS	OPERATIONAL CHANGES
3. LIFTING TO DUMP CONTAINER continued				g. Twisting/turning**	5%	8%	11%	Proper lifting techniques			Same as above.
				h. Throwing plastic bags**	14%	14%	12%	Not allowing.			Same as above.
				i. Slipping or falling on wet, icy or oily surfaces	4%	8%	8%	Proper foot placement.	Slip resistant, high ankled safety shoes.		Same as above.
				j. Struck by object ejected from hopper	1%	1%	1%	Not allowing employees at back of truck while hopper is operating.	Eye protection.		Same as above.
				k. Dropped heavy container on leg or foot	<1%	2%	2%	Test weight. Tag and leave heavy containers.	Slip resistant gloves. Steel-toed safety shoes.	Container weight limits. Public acceptance campaign.	Same as above.
4. CARRYING CONTAINER	6%	7%	6%	a. Slipped or fell	40%	42%	43%	Routing. Proper carrying techniques.	Slip resistant, high ankled safety shoes.		Change from backyard to curbside with mechanical or semi-mechanical collection.
% of Cont. Accidents	13%	15%	14%	(1) While handling tote barrel**	13%	4%	3%	Do not overfill. Routing. Proper carrying techniques.	Same as above.		Change from tote barrels to wheeled carts or to mechanical or semi-mechanical collection at curbside

** Overlapping numbers

CONTAINER RELATED ACCIDENTS
PRELIMINARY TASK/HAZARD ANALYSIS

TASK				HAZARDS				POSSIBLE COUNTERMEASURES			
	Percent of Total				Percent of Task						
	% No. Inj.	% Days Lost	% Direct Costs		% No. Inj.	% Days Lost	% Direct Costs	EMPLOYEE TRAINING	PROTECTIVE CLOTHING	CONTAINER REGULATIONS	OPERATIONAL CHANGES
4. CARRYING CONTAINER continued				(2) On wet, icy or oily surfaces**	19%	22%	22%	Routing. Proper carrying techniques.	Slip resistant, high ankled safety shoes.		Change from backyard to curbside with mechanical or semi-mechanical collection.
				(3) On waste on ground**	9%	5%	6%	Routing. Clean spilled waste immediately. Proper carrying techniques.	Same as above.		Same as above.
				(4) On depression**	5%	4%	4%	Routing. Proper carrying techniques.	Same as above.		Same as above.
				(5) On inclined surface**	3%	8%	10%	Routing. Proper carrying techniques.	Same as above.		Same as above.
				(6) On uneven surface**	3%	4%	2%	Routing. Proper carrying techniques.	Same as above.		Same as above.
				b. Struck against vehicle	8%	3%	3%	Proper carrying techniques.			Same as above.
				c. Struck self with container	14%	5%	5%	Proper carrying techniques.			
				(1) Dropped container on self**	3%	1%	<1%	Maintain firm grip. Proper carrying techniques.	Steel toed safety shoes. Slip resistant gloves.		

** Overlapping numbers

CONTAINER RELATED ACCIDENTS

PRELIMINARY TASK/HAZARD ANALYSIS

TASK				HAZARDS				POSSIBLE COUNTERMEASURES			
	Percent of Total				Percent of Task						
	% No. Inj.	% Days Lost	% Direct Costs		% No. Inj.	% Days Lost	% Direct Costs	EMPLOYEE TRAINING	PROTECTIVE CLOTHING	CONTAINER REGULATIONS	OPERATIONAL CHANGES
4. CARRYING CONTAINER continued				(2) Protruding waste**	9%	3%	3%	Proper carrying techniques.	Leather aprons or chaps to protect legs.	Separate handling of glass and other sharp wastes.	
				d. Overexertion while handling heavy container	9%	12%	14%	Tag and leave heavy containers. Proper carrying techniques.		Container weight limits. Public acceptance campaign.	
				e. Struck by vehicle	3%	12%	14%	Collect from one side of the street at a time.	Traffic vests or other high visibility clothing.		Rule to collect from only one side of the street. Change to mechanical or semi-mechanical collection.
5. PUSHING OR PULLING CONTAINER				a. Bulk containers							
	4%	6%	5%	(1) Overexertion	24%	57%	56%	Handle with coworker.			Require two man operation.
	% of Cont. Accidents										
	8%	13%	13%	(2) Overexertion while handling with coworker	4%	3%	4%	Team pushing/pulling training.			
				(3) Caught between container and wall or vehicle	11%	12%	10%	Push rather than pull to keep body away from pinch points.		Container accessibility regulations. Container location regulations-level surface requirement.	

** Overlapping numbers

CONTAINER RELATED ACCIDENTS

PRELIMINARY TASK/HAZARD ANALYSIS

TASK				HAZARDS				POSSIBLE COUNTERMEASURES			
	Percent of Total			Percent of Task							
	% No. Inj.	% Days Lost	% Direct Costs	% No. Inj.	% Days Lost	% Direct Costs		EMPLOYEE TRAINING	PROTECTIVE CLOTHING	CONTAINER REGULATIONS	OPERATIONAL CHANGES
5. PUSHING OR PULLING CONTAINER continued				(4)			Rolled bulk container over foot	Push rather than pull.	Steel toed safety shoes.		
				4%	4%	11%					
				(5)			Struck by bulk container lid	Keep hands away from pinch points.			
				4%	1%	3%					
				b. Wheeled cart							
				(1)			Slipped or fell	Routing.	Slip resistant, high ankled shoes.		Change to curbside collection or to mechanical or semi-mechanical collection.
				17%	7%	7%					

FIGURE 1-7

ALL USERS
DETAILED DESCRIPTION OF
LIFTING CONTAINER ACCIDENTS
OSHA RECORDABLE INJURIES ONLY

REPORTING PERIOD: DECEMBER 1975 - DECEMBER 1976

THIS PROFILE IS A FORMATTED SENTENCE CONSISTING OF ACTIVITY, ACCIDENT TYPE, NATURE OF INJURY AND PART OF BODY.

PROFILE	NO. INJ	DAYS	COSTS
EMPLOYEE WAS LIFTING STD MTL CONT AND HE OVEREXERTED SELF WITH STD MTL CONT WHICH WAS UNUSUALLY HEAVY RESULTING IN SPRAIN OR STRAIN TO GROIN.	9	84	4093
EMPLOYEE WAS LIFTING PLASTIC BAG AND HE FELL ON OILY PAVEMENT IN STEPPING DOWN RESULTING IN SPRAIN OR STRAIN TO BACK.	1	5	152
EMPLOYEE WAS LIFTING STD MTL CONT AND HE OVEREXERTED SELF WITH STD MTL CONT WHICH WAS UNUSUALLY HEAVY RESULTING IN SPRAIN OR STRAIN TO BACK.	82	960	47164
EMPLOYEE WAS LIFTING STD MTL CONT AND HE OVEREXERTED SELF WITH STD MTL CONT WHICH WAS FULL RESULTING IN SPRAIN OR STRAIN TO GROIN.	2	4	321
EMPLOYEE WAS LIFTING STD MTL CONT AND HE OVEREXERTED SELF WITH STD MTL CONT WHICH WAS STUCK OR FROZEN TO GRND RESULTING IN SPRAIN OR STRAIN TO BUTTOCKS.	1	1	100
EMPLOYEE WAS LIFTING STD MTL CONT AND HE OVEREXERTED SELF WITH STD MTL CONT WHICH WAS UNUSUALLY HEAVY AND HNDLD WITH COWRKR RESULTING IN SPRAIN OR STRAIN TO GROIN.	1	1	70
EMPLOYEE WAS LIFTING PLASTIC BAG AND HE WAS HURT BY HANDLING PLASTIC BAG WHICH HAD PROTRUDING GLASS RESULTING IN CUT/PUNCTURE TO HAND.	4	10	416
EMPLOYEE WAS LIFTING 300 GAL PLASTIC CONT AND HE OVEREXERTED SELF WITH 300 GAL PLASTIC CONT WHICH WAS UNUSUALLY HEAVY AND UNUSUALLY LG RESULTING IN SPRAIN OR STRAIN TO BUTTOCKS.	1	3	177
EMPLOYEE WAS LIFTING STD MTL CONT AND HE FELL ON ICY GROUND RESULTING IN TORN CARTILAGE TO KNEE.	1	15	684
EMPLOYEE WAS LIFTING UNK CONT TYPE AND HE OVEREXERTED SELF WITH UNK CONT TYPE WHICH WAS UNUSUALLY HEAVY RESULTING IN SPRAIN OR STRAIN TO HIPS.	1	4	15
EMPLOYEE WAS LIFTING STD MTL CONT AND HE WAS HURT BY HANDLING STD MTL CONT WHICH HAD PROTRUDING GLASS RESULTING IN CUT/PUNCTURE TO FINGERS.	1	3	178
EMPLOYEE WAS LIFTING STD MTL CONT AND HE STRUCK SELF WITH STD MTL CONT WHICH WAS UNUSUALLY HEAVY RESULTING IN BRUISE TO FOOT.	2	7	332
EMPLOYEE WAS LIFTING PLASTIC BAG AND HE WAS HURT BY HANDLING PLASTIC BAG WHICH WAS FULL AND STRK AGNST PACKING MECHANISM RESULTING IN CUT/PUNCTURE TO HAND.	1	0	20
EMPLOYEE WAS LIFTING STD MTL CONT AND HE WAS HURT BY HANDLING STD MTL CONT WHICH WAS FULL AND HAD SHARP EDGES RESULTING IN CUT/PUNCTURE TO FINGERS.	3	253	9209
EMPLOYEE WAS LIFTING PLASTIC CAN AND HE WAS HURT BY HANDLING PLASTIC CAN WHICH HAD PROTRUDING GLASS RESULTING IN CUT/PUNCTURE TO WRIST.	1	0	20
EMPLOYEE WAS LIFTING TOTE BARREL AND HE OVEREXERTED SELF WITH TOTE BARREL WHICH WAS EMPTY RESULTING IN SPRAIN OR STRAIN TO BACK.	1	2	33
EMPLOYEE WAS LIFTING PLASTIC BAG AND HE WAS HURT BY HANDLING PLASTIC BAG WHICH WAS FULL AND HAD PROTRUDING GLASS RESULTING IN CUT/PUNCTURE TO ANKLE.	1	20	668
EMPLOYEE WAS LIFTING PLASTIC BAG AND HE STRUCK SELF WITH PLASTIC BAG WHICH HAD PROTRUDING GLASS RESULTING IN CUT/PUNCTURE TO LEG.	10	15	952
EMPLOYEE WAS LIFTING PLASTIC BAG AND HE STRUCK SELF WITH PLASTIC BAG WHICH WAS FULL AND HAD PROTRUDING GLASS RESULTING IN CUT/PUNCTURE TO LEG.	1	4	172
EMPLOYEE WAS LIFTING STD MTL CONT AND HE WAS HURT BY HANDLING STD MTL CONT WHICH HAD PROTRUDING GLASS RESULTING IN CUT/PUNCTURE TO HAND.	1	7	139
EMPLOYEE WAS LIFTING STD MTL CONT AND HE STRUCK AGAINST UNK OBJECT RESULTING IN CUT/PUNCTURE TO FACE.	1	0	30
EMPLOYEE WAS LIFTING STD MTL CONT AND HE OVEREXERTED SELF WITH STD MTL CONT WHICH WAS FULL RESULTING IN SPRAIN OR STRAIN TO ELBOW.	1	5	195
EMPLOYEE WAS LIFTING PLASTIC BAG AND HE STRUCK SELF WITH PLASTIC BAG RESULTING IN CUT/PUNCTURE TO LEG.	1	0	20
EMPLOYEE WAS LIFTING TOTE BARREL AND HE SLIPPED STEPPING ON PAVEMENT RESULTING IN SPRAIN OR STRAIN TO ABDOMEN.	1	0	20

PROFILE	NO. INJ	DAYS	COSTS
EMPLOYEE WAS LIFTING STD MTL CONT AND HE MADE SUDDEN MOVEMENT IN CATCHING STD MTL CONT WHICH WAS FULL AND SLIPPERY (WET) RESULTING IN SPRAIN OR STRAIN TO BACK.	1	2	117
EMPLOYEE WAS LIFTING PLASTIC BAG AND HE STRUCK SELF WITH PLASTIC BAG WHICH WAS UNUSUALLY HEAVY AND HAD PROTRUDING GLASS RESULTING IN CUT/PUNCTURE TO LEG.	1	7	289
EMPLOYEE WAS LIFTING TOTE BARREL AND HE OVEREXERTED SELF WITH TOTE BARREL WHICH WAS UNUSUALLY HEAVY AND UNUSUALLY LG RESULTING IN SPRAIN OR STRAIN TO GROIN.	1	0	20
EMPLOYEE WAS LIFTING PLASTIC BAG AND HE WAS HURT BY HANDLING PLASTIC BAG WHICH HAD A PROTRUDING HYPODERMIC NEEDLE RESULTING IN CUT/PUNCTURE TO HAND.	1	0	20
EMPLOYEE WAS LIFTING PLASTIC BAG AND HE OVEREXERTED SELF WITH PLASTIC BAG WHICH WAS FULL RESULTING IN SPRAIN OR STRAIN TO BACK.	6	30	2061
EMPLOYEE WAS LIFTING STD MTL CONT AND HE OVEREXERTED SELF WITH STD MTL CONT WHICH WAS UNUSUALLY HEAVY RESULTING IN SPRAIN OR STRAIN TO CHEST.	6	70	1541
EMPLOYEE WAS LIFTING PLASTIC BAG AND HE WAS HURT BY HANDLING PLASTIC BAG WHICH WAS FULL AND HAD PROTRUDING WASTE RESULTING IN CUT/PUNCTURE TO HAND.	1	9	493
EMPLOYEE WAS LIFTING STD MTL CONT AND HE FELL WHILE ON WET PAVEMENT AND STRK AGNST WALL RESULTING IN SPRAIN OR STRAIN TO GROIN.	1	0	20
EMPLOYEE WAS LIFTING OTHER CONT TYPE AND HE WAS INJURED IN UNK ACCIDENT RESULTING IN UNKNOWN TYPE OF INJURY TO ELBOW.	1	3	125
EMPLOYEE WAS LIFTING STD MTL CONT AND HE WAS CAUGHT IN HANDLE OF CONT RESULTING IN BRUISE TO FINGERS.	1	4	173
EMPLOYEE WAS LIFTING TOTE BARREL AND HE SLIPPED STEPPING ON OILY PAVEMENT RESULTING IN SPRAIN OR STRAIN TO BACK.	1	18	487
EMPLOYEE WAS LIFTING PLASTIC BAG AND HE OVEREXERTED SELF WITH PLASTIC BAG WHICH WAS UNUSUALLY HEAVY RESULTING IN SPRAIN OR STRAIN TO BACK.	11	95	3052
EMPLOYEE WAS LIFTING STD MTL CONT AND HE OVEREXERTED SELF WITH STD MTL CONT RESULTING IN OTHER TYPE OF INJURY TO OTHER BODY PART.	1	2	119
EMPLOYEE WAS LIFTING NSTD MTL CONT AND HE OVEREXERTED SELF WITH NSTD MTL CONT WHICH WAS UNUSUALLY HEAVY AND UNUSUALLY LG RESULTING IN SPRAIN OR STRAIN TO BACK.	4	69	3699
EMPLOYEE WAS LIFTING STD MTL CONT AND HE OVEREXERTED SELF WITH NSTD MTL CONT WHICH WAS FULL RESULTING IN SPRAIN OR STRAIN TO BACK.	1	4	199
EMPLOYEE WAS LIFTING TOTE BARREL AND HE OVEREXERTED SELF WITH TOTE BARREL WHICH WAS UNUSUALLY HEAVY RESULTING IN SPRAIN OR STRAIN TO BACK.	3	6	232
EMPLOYEE WAS LIFTING PLASTIC BAG AND HE WAS HURT BY HANDLING PLASTIC BAG WHICH HAD PROTRUDING GLASS RESULTING IN CUT/PUNCTURE TO FINGERS.	7	22	1064
EMPLOYEE WAS LIFTING STD MTL CONT AND HE OVEREXERTED SELF WITH STD MTL CONT WHICH WAS UNUSUALLY HEAVY AND UNUSUALLY LG RESULTING IN SPRAIN OR STRAIN TO BACK.	2	16	554
EMPLOYEE WAS LIFTING STD MTL CONT AND HE STRUCK SELF WITH STD MTL CONT RESULTING IN SPRAIN OR STRAIN TO ANKLE.	1	0	58
EMPLOYEE WAS LIFTING STD MTL CONT AND HE OVEREXERTED SELF WITH STD MTL CONT WHICH WAS FULL RESULTING IN SPRAIN OR STRAIN TO BACK.	29	171	8376
EMPLOYEE WAS LIFTING STD MTL CONT AND HE FELL WHILE ON ICY PAVEMENT AND STRK AGNST GARBAGE CAN RK RESULTING IN BRUISE TO CHEST.	1	2	166
EMPLOYEE WAS LIFTING STD MTL CONT AND HE STRUCK SELF WITH STD MTL CONT WHICH WAS FULL AND HAD SLIPPED FROM HIS HANDS RESULTING IN BRUISE TO TOES.	1	11	268
EMPLOYEE WAS LIFTING STD MTL CONT AND HE WAS STRUCK BY ROCKS/CONCRETE/DIRT RESULTING IN BRUISE TO FOOT.	1	12	589
EMPLOYEE WAS LIFTING STD MTL CONT AND HE WAS CAUGHT IN HANDLE OF CONT RESULTING IN SPRAIN OR STRAIN TO BACK.	1	3	308
EMPLOYEE WAS LIFTING STD MTL CONT AND HE MADE SUDDEN MOVEMENT IN CATCHING STD MTL CONT WHICH WAS FULL AND HAD SLIPPED FROM HIS HANDS RESULTING IN SPRAIN OR STRAIN TO SHOULDER.	1	4	248
EMPLOYEE WAS LIFTING PLASTIC BAG AND HE WAS HURT BY HANDLING PLASTIC BAG WHICH WAS FULL AND HAD PROTRUDING GLASS RESULTING IN CUT/PUNCTURE TO LEG.	1	280	4694

PROFILE	NO. INJ	DAYS	COSTS
EMPLOYEE WAS LIFTING PLASTIC BAG AND HE OVEREXERTED SELF WITH PLASTIC BAG WHICH WAS UNUSUALLY HEAVY RESULTING IN SPRAIN OR STRAIN TO WRIST.	1	0	123
EMPLOYEE WAS LIFTING PLASTIC CAN AND HE OVEREXERTED SELF WITH PLASTIC CAN WHICH WAS FULL AND UNUSUALLY LG RESULTING IN SPRAIN OR STRAIN TO BACK.	1	3	176
EMPLOYEE WAS LIFTING PLASTIC BAG AND HE OVEREXERTED SELF WITH PLASTIC BAG WHICH WAS UNUSUALLY HEAVY AND UNUSUALLY LG RESULTING IN SPRAIN OR STRAIN TO BACK.	1	2	87
EMPLOYEE WAS LIFTING WHEELED CART AND HE OVEREXERTED SELF WITH WHEELED CART WHICH WAS FULL AND UNUSUALLY LG RESULTING IN SPRAIN OR STRAIN TO SHOULDER.	1	7	87
EMPLOYEE WAS LIFTING STD MTL CONT AND HE STRUCK AGAINST OTHER OBJECT RESULTING IN SPRAIN OR STRAIN TO NECK.	1	1	73
EMPLOYEE WAS LIFTING STD MTL CONT AND HE WAS HURT BY HANDLING STD MTL CONT WHICH WAS FULL AND HAD SHARP EDGES RESULTING IN CUT/PUNCTURE TO HAND.	2	4	203
EMPLOYEE WAS LIFTING STD MTL CONT AND HE OVEREXERTED SELF WITH STD MTL CONT WHICH WAS UNUSUALLY HEAVY RESULTING IN SPRAIN OR STRAIN TO NECK.	2	6	802
EMPLOYEE WAS LIFTING STD MTL CONT AND HE OVEREXERTED SELF WITH STD MTL CONT WHICH WAS HVY (TIGHTLY PACKED) RESULTING IN SPRAIN OR STRAIN TO BACK.	2	17	758
EMPLOYEE WAS LIFTING STD MTL CONT AND HE OVEREXERTED SELF WITH STD MTL CONT WHICH WAS UNUSUALLY HEAVY RESULTING IN SPRAIN OR STRAIN TO SHOULDER.	13	65	4998
EMPLOYEE WAS LIFTING STD MTL CONT AND HE CONTACTED CAUSTIC OR TOXIC ACID RESULTING IN EYE IRRITATION TO EYES.	1	0	53
EMPLOYEE WAS LIFTING CRATE AND HE OVEREXERTED SELF WITH CRATE WHICH WAS UNUSUALLY HEAVY AND UNUSUALLY LG RESULTING IN SPRAIN OR STRAIN TO BACK.	1	16	547
EMPLOYEE WAS LIFTING UNBUNDLED SHRUBBERY AND HE OVEREXERTED SELF WITH UNBUNDLED SHRUBBERY RESULTING IN SPRAIN OR STRAIN TO BACK.	1	12	789
EMPLOYEE WAS LIFTING TOTE BARREL AND HE OVEREXERTED SELF WITH TOTE BARREL WHICH WAS FULL AND UNUSUALLY LG RESULTING IN SPRAIN OR STRAIN TO BACK.	1	73	345
EMPLOYEE WAS LIFTING STD MTL CONT AND HE OVEREXERTED SELF WITH STD MTL CONT WHICH WAS UNUSUALLY HEAVY AND RECESSED RESULTING IN SPRAIN OR STRAIN TO BACK.	2	18	677
EMPLOYEE WAS LIFTING CONT LID AND HE WAS HURT BY HANDLING STD MTL CONT WHICH HAD PROTRUDING GLASS RESULTING IN CUT/PUNCTURE TO FINGERS.	1	1	59
EMPLOYEE WAS LIFTING STD MTL CONT AND HE SLIPPED FROM CURB ONTO PAVEMENT RESULTING IN SPRAIN OR STRAIN TO BACK.	1	0	73
EMPLOYEE WAS LIFTING STD MTL CONT AND HE STRUCK AGAINST POST RESULTING IN CUT/PUNCTURE TO SCALP.	1	0	67
EMPLOYEE WAS LIFTING OIL DRUM AND HE OVEREXERTED SELF WITH OIL DRUM RESULTING IN SPRAIN OR STRAIN TO BACK.	1	0	5
EMPLOYEE WAS LIFTING STD MTL CONT AND HE OVEREXERTED SELF WITH STD MTL CONT WHICH WAS UNUSUALLY HEAVY AND HNDLD WITH COWRKR RESULTING IN SPRAIN OR STRAIN TO BACK.	3	24	1115
EMPLOYEE WAS LIFTING PLASTIC BAG AND HE OVEREXERTED SELF WITH PLASTIC BAG WHICH WAS HVY (YARD CLIPPINGS) RESULTING IN SPRAIN OR STRAIN TO BACK.	3	25	823
EMPLOYEE WAS LIFTING CARDBD BOX AND HE STRUCK AGAINST SIDE OF VEH RESULTING IN BRUISE TO ELBOW.	1	0	51
EMPLOYEE WAS LIFTING STD MTL CONT AND HE WAS STRUCK BY ROCKS/CONCRETE/DIRT WHICH FELL OUT OF TOP OF CONT RESULTING IN BRUISE TO LEG.	1	1	52
EMPLOYEE WAS LIFTING STD MTL CONT AND HE OVEREXERTED SELF WITH STD MTL CONT WHICH WAS HVY (YARD CLIPPINGS) AND SLIPPERY (WET) RESULTING IN SPRAIN OR STRAIN TO SHOULDER.	1	5	196
EMPLOYEE WAS LIFTING STD MTL CONT AND HE SLIPPED FROM STEP OF VEH ONTO PAVEMENT RESULTING IN BRUISE TO GROIN.	1	3	135
EMPLOYEE WAS LIFTING PLASTIC BAG AND HE STRUCK SELF WITH PLASTIC BAG WHICH HAD PROTRUDING GLASS RESULTING IN CUT/PUNCTURE TO ANKLE.	1	14	799
EMPLOYEE WAS LIFTING PLASTIC BAG AND HE OVEREXERTED SELF WITH PLASTIC BAG WHICH WAS UNUSUALLY HEAVY AND SLIPPERY (WET) RESULTING IN SPRAIN OR STRAIN TO BACK.	2	28	2532

PROFILE	NO. INJ	DAYS	COSTS
EMPLOYEE WAS LIFTING TOTE BARREL AND HE OVEREXERTED SELF WITH TOTE BARREL WHICH WAS UNUSUALLY HEAVY AND UNUSUALLY LG RESULTING IN SPRAIN OR STRAIN TO BACK.	5	40	3750
EMPLOYEE WAS LIFTING PLASTIC CAN AND HE OVEREXERTED SELF WITH PLASTIC CAN WHICH WAS HVY (ROCKS) AND HNDLD WITH COWRKR RESULTING IN SPRAIN OR STRAIN TO BACK.	1	10	401
EMPLOYEE WAS LIFTING STD MTL CONT AND HE OVEREXERTED SELF WITH STD MTL CONT WHICH WAS UNUSUALLY HEAVY RESULTING IN SPRAIN OR STRAIN TO ABDOMEN.	4	5	588
EMPLOYEE WAS LIFTING STD MTL CONT AND HE OVEREXERTED SELF WITH STD MTL CONT WHICH WAS FULL RESULTING IN SPRAIN OR STRAIN TO HAND.	3	18	1011
EMPLOYEE WAS LIFTING STD MTL CONT AND HE OVEREXERTED SELF WITH STD MTL CONT WHICH WAS HVY (ROCKS) RESULTING IN SPRAIN OR STRAIN TO ABDOMEN.	1	11	216
EMPLOYEE WAS LIFTING CARDBD BOX AND HE WAS HURT BY HANDLING CARDBOARD BOX WHICH HAD PROTRUDING GLASS RESULTING IN CUT/PUNCTURE TO HAND.	1	0	64
EMPLOYEE WAS LIFTING STD MTL CONT AND HE STRUCK SELF WITH STD MTL CONT WHICH WAS FULL AND HAD SLIPPED FROM HIS HANDS RESULTING IN BRUISE TO FOOT.	1	4	164
EMPLOYEE WAS LIFTING STD MTL CONT AND HE OVEREXERTED SELF WITH STD MTL CONT WHICH WAS FULL RESULTING IN SPRAIN OR STRAIN TO CHEST.	3	8	436
EMPLOYEE WAS LIFTING TOTE BARREL AND HE STRUCK AGAINST BACK OF VEH RESULTING IN BRUISE TO KNEE.	1	1	45
EMPLOYEE WAS LIFTING PLASTIC BAG AND HE OVEREXERTED SELF WITH PLASTIC BAG WHICH WAS HVY (ROCKS) RESULTING IN SPRAIN OR STRAIN TO BACK.	2	8	311
EMPLOYEE WAS LIFTING NSTD MTL CONT AND HE OVEREXERTED SELF WITH NSTD MTL CONT WHICH WAS UNUSUALLY HEAVY RESULTING IN SPRAIN OR STRAIN TO BACK.	1	0	34
EMPLOYEE WAS LIFTING STD MTL CONT AND HE OVEREXERTED SELF WITH STD MTL CONT WHICH WAS HVY (WATER FILLED) RESULTING IN SPRAIN OR STRAIN TO NECK.	1	6	407
EMPLOYEE WAS LIFTING PLASTIC BAG AND HE STRUCK SELF WITH PLASTIC BAG WHICH HAD A PROTRUDING HYPODERMIC NEEDLE RESULTING IN CUT/PUNCTURE TO LEG.	1	0	56
EMPLOYEE WAS LIFTING OTHER CONT TYPE AND HE OVEREXERTED SELF WITH OTHER CONT TYPE WHICH WAS HVY (ROCKS) AND UNUSUALLY LG RESULTING IN SPRAIN OR STRAIN TO BACK.	1	0	35
EMPLOYEE WAS LIFTING STD MTL CONT AND HE WAS STRUCK BY STD MTL CONT WHICH WAS EMPTY RESULTING IN BRUISE TO KNEE.	1	0	28
EMPLOYEE WAS LIFTING STD MTL CONT AND HE SLIPPED STEPPING ON OBJ ON GROUND RESULTING IN SPRAIN OR STRAIN TO ANKLE.	1	1	64
EMPLOYEE WAS LIFTING STD MTL CONT AND HE OVEREXERTED SELF WITH STD MTL CONT WHICH WAS HVY (ROCKS) RESULTING IN SPRAIN OR STRAIN TO BACK.	10	116	4130
EMPLOYEE WAS LIFTING STD MTL CONT AND HE OVEREXERTED SELF WITH STD MTL CONT WHICH WAS HVY (YARD CLIPPINGS) RESULTING IN SPRAIN OR STRAIN TO BACK.	6	25	2007
EMPLOYEE WAS LIFTING TOTE BARREL AND HE MADE SUDDEN MOVEMENT TOTE BARREL WHICH WAS EMPTY RESULTING IN SPRAIN OR STRAIN TO ANKLE.	1	3	71
EMPLOYEE WAS LIFTING STD MTL CONT AND HE FELL ON PAVEMENT RESULTING IN SPRAIN OR STRAIN TO ARM.	1	0	25
EMPLOYEE WAS LIFTING STD MTL CONT AND HE WAS STRUCK BY VEH RESULTING IN BRUISE TO KNEE.	1	9	258
EMPLOYEE WAS LIFTING PLASTIC CAN AND HE OVEREXERTED SELF WITH PLASTIC CAN WHICH WAS FULL RESULTING IN SPRAIN OR STRAIN TO NECK.	1	0	20
EMPLOYEE WAS LIFTING STD MTL CONT AND HE OVEREXERTED SELF WITH STD MTL CONT WHICH WAS UNUSUALLY HEAVY RESULTING IN SPRAIN OR STRAIN TO WRIST.	3	2	269
EMPLOYEE WAS LIFTING PLASTIC BAG AND HE OVEREXERTED SELF WITH PLASTIC BAG WHICH WAS UNUSUALLY HEAVY RESULTING IN HERNIA TO ABDOMEN.	1	3	345
EMPLOYEE WAS LIFTING STD MTL CONT AND HE OVEREXERTED SELF WITH STD MTL CONT WHICH WAS UNUSUALLY HEAVY IN STEPPING DOWN RESULTING IN SPRAIN OR STRAIN TO BACK.	1	36	1261
EMPLOYEE WAS LIFTING STD MTL CONT AND HE OVEREXERTED SELF WITH STD MTL CONT WHICH WAS FULL RESULTING IN SPRAIN OR STRAIN TO SHOULDER.	4	17	752
EMPLOYEE WAS LIFTING STD MTL CONT AND HE OVEREXERTED SELF WITH STD MTL CONT WHICH WAS HVY (WATER FILLED) RESULTING IN SPRAIN OR STRAIN TO BACK.	4	38	1442

PROFILE	NO. INJ	DAYS	COST
EMPLOYEE WAS LIFTING TOTE BARREL AND HE OVEREXERTED SELF WITH TOTE BARREL WHICH WAS UNUSUALLY HEAVY AND UNUSUALLY LG RESULTING IN SPRAIN OR STRAIN TO ABDOMEN.	1	2	4
EMPLOYEE WAS LIFTING STD MTL CONT AND HE OVEREXERTED SELF WITH STD MTL CONT WHICH WAS UNUSUALLY HEAVY RESULTING IN SPRAIN OR STRAIN TO ARM.	2	12	72
EMPLOYEE WAS LIFTING STD MTL CONT AND HE OVEREXERTED SELF WITH STD MTL CONT WHICH WAS HVY (YARD CLIPPINGS) RESULTING IN SPRAIN OR STRAIN TO TRUNK.	1	6	25
EMPLOYEE WAS LIFTING STD MTL CONT AND HE WAS STRUCK BY BOTTLE WHICH FELL OUT OF TOP OF CONT RESULTING IN CUT/PUNCTURE TO LEG.	1	4	24
EMPLOYEE WAS LIFTING DEAD ANIMAL AND HE OVEREXERTED SELF WITH DEAD ANIMAL IN STEPPING DOWN RESULTING IN SPRAIN OR STRAIN TO BACK.	1	25	173
EMPLOYEE WAS LIFTING PLASTIC BAG AND HE OVEREXERTED SELF WITH PLASTIC BAG WHICH WAS UNUSUALLY HEAVY RESULTING IN SPRAIN OR STRAIN TO ABDOMEN.	1	7	32
EMPLOYEE WAS LIFTING STD MTL CONT AND HE STRUCK SELF WITH STD MTL CONT WHICH WAS UNUSUALLY HEAVY AND HAD SLIPPED FROM HIS HANDS RESULTING IN CUT/PUNCTURE TO LEG.	2	2	12
EMPLOYEE WAS LIFTING STD MTL CONT AND HE OVEREXERTED SELF WITH STD MTL CONT WHICH WAS UNUSUALLY HEAVY AND BEING HNDLD W OTHER CONT RESULTING IN SPRAIN OR STRAIN TO BACK.	1	7	33
EMPLOYEE WAS LIFTING TOTE BARREL AND HE WAS CAUGHT BETWEEN CONT & EDGE OF HOPPER (CONT WAS HVY-YARD CLIPPINGS) RESULTING IN FRACTURE TO FINGERS.	1	21	110
EMPLOYEE WAS LIFTING OTHER CONT TYPE AND HE OVEREXERTED SELF WITH OTHER CONT TYPE WHICH WAS HVY (ROCKS) RESULTING IN SPRAIN OR STRAIN TO TRUNK.	1	3	143
EMPLOYEE WAS LIFTING STD MTL CONT AND HE WAS CAUGHT BETWEEN CONT & EDGE OF HOPPER (CONT WT SHIFTED) RESULTING IN BRUISE TO HAND.	1	3	178
EMPLOYEE WAS LIFTING STD MTL CONT AND HE OVEREXERTED SELF WITH STD MTL CONT WHICH WAS HVY (WATER FILLED) AND SLIPPERY (WET) RESULTING IN SPRAIN OR STRAIN TO BACK.	1	5	176
EMPLOYEE WAS LIFTING STD MTL CONT AND HE SLIPPED STEPPING ON OBJ ON GROUND RESULTING IN SPRAIN OR STRAIN TO BACK.	1	6	207
EMPLOYEE WAS LIFTING STD MTL CONT AND HE FELL WHILE ON UNEVEN PAVEMENT IN STEPPING DOWN RESULTING IN BRUISE TO LEG.	1	11	743
EMPLOYEE WAS LIFTING PLASTIC BAG AND HE WAS HURT BY HANDLING PLASTIC BAG WHICH HAD PROTRUDING GLASS IN STEPPING DOWN RESULTING IN CUT/PUNCTURE TO HAND.	1	0	27
EMPLOYEE WAS LIFTING STD MTL CONT AND HE OVEREXERTED SELF WITH STD MTL CONT WHICH WAS HVY (WATER FILLED) RESULTING IN SPRAIN OR STRAIN TO GROIN.	2	0	132
EMPLOYEE WAS LIFTING PLASTIC CAN AND HE OVEREXERTED SELF WITH PLASTIC CAN WHICH WAS FULL RESULTING IN SPRAIN OR STRAIN TO BACK.	3	8	863
EMPLOYEE WAS LIFTING PLASTIC BAG AND HE STRUCK SELF WITH PLASTIC BAG WHICH HAD PROTRUDING GLASS AND BEING HNDLD W OTHER CONT RESULTING IN CUT/PUNCTURE TO LEG.	1	0	17
EMPLOYEE WAS LIFTING STD MTL CONT AND HE GOT WASTE PARTICLES IN EYE RESULTING IN EYE IRRITATION TO EYES.	1	3	171
EMPLOYEE WAS LIFTING OIL DRUM AND HE OVEREXERTED SELF WITH OIL DRUM WHICH WAS UNUSUALLY HEAVY AND UNUSUALLY LG RESULTING IN SPRAIN OR STRAIN TO BACK.	1	17	884
EMPLOYEE WAS LIFTING CRATE AND HE OVEREXERTED SELF WITH CRATE WHICH WAS FULL RESULTING IN SPRAIN OR STRAIN TO SHOULDER.	1	4	870
EMPLOYEE WAS LIFTING STD MTL CONT AND HE WAS STRUCK BY BOTTLE WHICH FELL OUT OF TOP OF CONT RESULTING IN CUT/PUNCTURE TO HAND.	1	0	76
EMPLOYEE WAS LIFTING PLASTIC BAG AND HE WAS HURT BY HANDLING PLASTIC BAG WHICH HAD PROTRUDING WASTE RESULTING IN INFECTION TO FINGERS.	1	0	69
EMPLOYEE WAS LIFTING TOTE BARREL AND HE OVEREXERTED SELF WITH TOTE BARREL WHICH WAS UNUSUALLY HEAVY AND SLIPPERY (WET) RESULTING IN SPRAIN OR STRAIN TO ABDOMEN.	1	0	28
EMPLOYEE WAS LIFTING STD MTL CONT AND HE STRUCK SELF WITH STD MTL CONT WHICH WAS UNUSUALLY HEAVY RESULTING IN BRUISE TO TOES.	1	3	134

PROFILE	NO. INJ	DAYS	COSTS
EMPLOYEE WAS LIFTING STD MTL CONT AND HE WAS STRUCK BY OTHER OBJECT RESULTING IN BRUISE TO FOOT.	1	5	294
EMPLOYEE WAS LIFTING CARDBD BOX AND HE WAS HURT BY HANDLING CARDBOARD BOX WHICH HAD PROTRUDING GLASS RESULTING IN CUT/PUNCTURE TO FINGERS.	1	5	219
EMPLOYEE WAS LIFTING STD MTL CONT AND HE OVEREXERTED SELF WITH STD MTL CONT WHICH WAS FULL RESULTING IN SPRAIN OR STRAIN TO WRIST.	3	6	369
EMPLOYEE WAS LIFTING CARDBD BOX AND HE WAS HURT BY HANDLING CARDBOARD BOX WHICH HAD PROTRUDING GLASS RESULTING IN CUT/PUNCTURE TO ARM.	1	0	19
EMPLOYEE WAS LIFTING PLASTIC BAG AND HE CONTACTED CAUSTIC OR TOXIC ACID RESULTING IN CHEMICAL BURN TO LEG.	1	0	56
EMPLOYEE WAS LIFTING STD MTL CONT AND HE MADE SUDDEN MOVEMENT IN CATCHING STD MTL CONT WHICH WAS UNUSUALLY HEAVY AND HAD SLIPPED FROM HIS HANDS RESULTING IN SPRAIN OR STRAIN TO BACK.	1	5	347
EMPLOYEE WAS LIFTING PLASTIC CAN AND HE OVEREXERTED SELF WITH STD MTL CONT WHICH WAS FULL AND IN WHICH WEIGHT SHIFTED RESULTING IN SPRAIN OR STRAIN TO BACK.	1	53	7813
EMPLOYEE WAS LIFTING STD MTL CONT AND HE STRUCK SELF WITH STD MTL CONT WHICH WAS UNUSUALLY HEAVY AND SLIPPERY (WET) RESULTING IN BRUISE TO FOOT.	1	5	132
EMPLOYEE WAS LIFTING PLASTIC BAG AND HE FELL ON GROUND RESULTING IN SPRAIN OR STRAIN TO BACK.	1	10	472
EMPLOYEE WAS LIFTING STD MTL CONT AND HE WAS CAUGHT IN HANDLE OF CONT (CONT WT SHIFTED) RESULTING IN SPRAIN OR STRAIN TO FINGERS.	1	6	283
EMPLOYEE WAS LIFTING STD MTL CONT AND HE STRUCK SELF WITH STD MTL CONT WHICH WAS HVY (YARD CLIPPINGS) RESULTING IN BRUISE TO KNEE.	1	0	41
EMPLOYEE WAS LIFTING PLASTIC CAN AND HE OVEREXERTED SELF WITH PLASTIC CAN WHICH WAS UNUSUALLY HEAVY RESULTING IN SPRAIN OR STRAIN TO BACK.	2	9	592
EMPLOYEE WAS LIFTING STD MTL CONT AND HE OVEREXERTED SELF WITH STD MTL CONT WHICH WAS UNUSUALLY HEAVY AND RECESSED RESULTING IN SPRAIN OR STRAIN TO SHOULDER.	1	0	79
EMPLOYEE WAS LIFTING TOTE BARREL AND HE OVEREXERTED SELF WITH TOTE BARREL WHICH WAS HVY (WATER FILLED) AND SLIPPERY (WET) RESULTING IN SPRAIN OR STRAIN TO BACK.	1	0	50
EMPLOYEE WAS LIFTING CARDBD BOX AND HE OVEREXERTED SELF WITH CARDBOARD BOX WHICH WAS HVY (YARD CLIPPINGS) AND HNDLD WITH COWRKR RESULTING IN SPRAIN OR STRAIN TO BACK.	1	9	316
EMPLOYEE WAS LIFTING STD MTL CONT AND HE WAS STRUCK BY BOTTLE WHICH FELL OUT OF TOP OF CONT RESULTING IN CUT/PUNCTURE TO ARM.	1	0	38
EMPLOYEE WAS LIFTING PLASTIC BAG AND HE WAS HURT BY HANDLING PLASTIC BAG WHICH HAD PROTRUDING WASTE RESULTING IN DERMATITIS TO ARM.	1	0	37
EMPLOYEE WAS LIFTING STD MTL CONT AND HE STRUCK SELF WITH STD MTL CONT WHICH WAS UNUSUALLY HEAVY AND HAD SLIPPED FROM HIS HANDS RESULTING IN BRUISE TO FOOT.	1	0	38
EMPLOYEE WAS LIFTING STD MTL CONT AND HE STRUCK AGAINST CERAMIC WASTE RESULTING IN CUT/PUNCTURE TO ARM.	1	1	59
EMPLOYEE WAS LIFTING STD MTL CONT AND HE WAS CAUGHT BETWEEN CONT & EDGE OF HOPPER (CONT HANDLE BROKE) RESULTING IN FRACTURE TO FINGERS.	1	0	153
EMPLOYEE WAS LIFTING NSTD MTL CONT AND HE OVEREXERTED SELF WITH NSTD MTL CONT WHICH WAS UNUSUALLY HEAVY AND UNUSUALLY LG RESULTING IN SPRAIN OR STRAIN TO SHOULDER.	1	0	93
EMPLOYEE WAS LIFTING STD MTL CONT AND HE MADE SUDDEN MOVEMENT IN CATCHING STD MTL CONT WHICH WAS UNUSUALLY HEAVY AND HAD THE BOTTOM FALL OUT RESULTING IN SPRAIN OR STRAIN TO ABDOMEN.	1	5	205
EMPLOYEE WAS LIFTING STD MTL CONT AND HE STRUCK SELF WITH STD MTL CONT WHICH WAS HVY (ROCKS) AND HAD SLIPPED FROM HIS HANDS RESULTING IN BRUISE TO TOES.	1	0	40
EMPLOYEE WAS LIFTING TOTE BARREL AND HE OVEREXERTED SELF WITH TOTE BARREL WHICH WAS FULL RESULTING IN SPRAIN OR STRAIN TO SHOULDER.	1	0	50
EMPLOYEE WAS LIFTING PLASTIC BAG AND HE WAS STRUCK BY WOOD WHICH FELL OUT OF BOTTOM OF CONT RESULTING IN BRUISE TO FINGERS.	1	8	444
EMPLOYEE WAS LIFTING TOTE BARREL AND HE OVEREXERTED SELF WITH TOTE BARREL WHICH WAS HVY (WATER FILLED) RESULTING IN SPRAIN OR STRAIN TO BACK.	[illegible]	[illegible]	[illegible]

PROFILE	NO. INJ	DAYS	COSTS
EMPLOYEE WAS LIFTING STD MTL CONT AND HE MADE SUDDEN MOVEMENT IN CATCHING STD MTL CONT WHICH WAS UNUSUALLY HEAVY AND THE HANDLE BROKE RESULTING IN SPRAIN OR STRAIN TO BACK.	1	8	434
EMPLOYEE WAS LIFTING OIL DRUM AND HE OVEREXERTED SELF WITH OIL DRUM WHICH WAS FULL AND SLIPPERY (WET) RESULTING IN SPRAIN OR STRAIN TO BACK.	1	2	133
EMPLOYEE WAS LIFTING PLASTIC BAG AND HE OVEREXERTED SELF WITH PLASTIC BAG WHICH WAS HVY (PAPER) RESULTING IN SPRAIN OR STRAIN TO BACK.	1	10	204
EMPLOYEE WAS LIFTING CARDBD BOX AND HE OVEREXERTED SELF WITH CARDBOARD BOX WHICH WAS UNUSUALLY HEAVY RESULTING IN SPRAIN OR STRAIN TO GROIN.	2	40	2318
EMPLOYEE WAS LIFTING TOTE BARREL AND HE OVEREXERTED SELF WITH TOTE BARREL WHICH WAS FULL RESULTING IN SPRAIN OR STRAIN TO BACK.	7	52	2880
EMPLOYEE WAS LIFTING STD MTL CONT AND HE OVEREXERTED SELF WITH STD MTL CONT WHICH WAS HVY (ROCKS) RESULTING IN SPRAIN OR STRAIN TO SHOULDER.	2	31	1757
EMPLOYEE WAS LIFTING PLASTIC BAG AND HE FELL WHILE ON OILY PAVEMENT AND STRK AGNST POST RESULTING IN BRUISE TO SHOULDER.	1	0	20
EMPLOYEE WAS LIFTING STD MTL CONT AND HE OVEREXERTED SELF WITH STD MTL CONT WHICH WAS UNUSUALLY HEAVY RESULTING IN SPRAIN OR STRAIN TO OTHER BODY PART.	1	2	69
EMPLOYEE WAS LIFTING STD MTL CONT AND HE SLIPPED STEPPING ON WET GRASS RESULTING IN SPRAIN OR STRAIN TO BACK.	1	3	41
EMPLOYEE WAS LIFTING STD MTL CONT AND HE WAS STRUCK BY GLASS WHICH FELL OUT OF TOP OF CONT RESULTING IN CUT/PUNCTURE TO LEG.	1	0	38
EMPLOYEE WAS LIFTING STD MTL CONT AND HE OVEREXERTED SELF WITH STD MTL CONT WHICH WAS UNUSUALLY HEAVY AND SLIPPERY (WET) RESULTING IN SPRAIN OR STRAIN TO BACK.	1	0	249
EMPLOYEE WAS LIFTING APPLIANCE AND HE WAS CAUGHT BETWEEN TWO OBJECTS RESULTING IN BRUISE TO FINGERS.	1	0	35
EMPLOYEE WAS LIFTING OIL DRUM AND HE OVEREXERTED SELF WITH OIL DRUM WHICH WAS UNUSUALLY HEAVY AND UNUSUALLY LG RESULTING IN DISLOCATION TO BACK.	1	7	314
EMPLOYEE WAS LIFTING STD MTL CONT AND HE MADE SUDDEN MOVEMENT IN CATCHING STD MTL CONT WHICH WAS FULL AND THE HANDLE BROKE RESULTING IN SPRAIN OR STRAIN TO BACK.	1	18	1262
EMPLOYEE WAS LIFTING PLASTIC BAG AND HE WAS HURT BY HANDLING PLASTIC BAG WHICH HAD PROTRUDING WASTE RESULTING IN CUT/PUNCTURE TO FINGERS.	4	10	394
EMPLOYEE WAS LIFTING OIL DRUM AND HE OVEREXERTED SELF WITH OIL DRUM WHICH WAS UNUSUALLY HEAVY RESULTING IN SPRAIN OR STRAIN TO CHEST.	1	5	283
EMPLOYEE WAS LIFTING LITTER CAN AND HE OVEREXERTED SELF WITH LITTER CAN WHICH WAS HVY (WATER FILLED) AND UNBLD WITH COWRKR RESULTING IN SPRAIN OR STRAIN TO SHOULDER.	1	18	949
EMPLOYEE WAS LIFTING CARDBD BOX AND HE OVEREXERTED SELF WITH CARDBOARD BOX WHICH WAS HVY (YARD CLIPPINGS) RESULTING IN SPRAIN OR STRAIN TO SHOULDER.	1	12	590
EMPLOYEE WAS LIFTING PLASTIC BAG AND HE OVEREXERTED SELF WITH PLASTIC BAG WHICH WAS UNUSUALLY HEAVY RESULTING IN SPRAIN OR STRAIN TO ARM.	1	0	30
EMPLOYEE WAS LIFTING STD MTL CONT AND HE OVEREXERTED SELF WITH STD MTL CONT WHICH WAS HVY (YARD CLIPPINGS) AND SLIPPERY (WET) RESULTING IN SPRAIN OR STRAIN TO BACK.	1	0	135
EMPLOYEE WAS LIFTING PLASTIC BAG AND HE OVEREXERTED SELF WITH PLASTIC BAG WHICH WAS HVY (YARD CLIPPINGS) RESULTING IN SPRAIN OR STRAIN TO SHOULDER.	2	0	130
EMPLOYEE WAS LIFTING CARDBD BOX AND HE OVEREXERTED SELF WITH CARDBOARD BOX WHICH WAS HVY (PAPER) RESULTING IN SPRAIN OR STRAIN TO BACK.	1	8	71
EMPLOYEE WAS LIFTING TOTE BARREL AND HE OVEREXERTED SELF WITH TOTE BARREL WHICH WAS EMPTY RESULTING IN SPRAIN OR STRAIN TO NECK.	1	5	313
EMPLOYEE WAS LIFTING STD MTL CONT AND HE OVEREXERTED SELF WITH STD MTL CONT WHICH WAS FULL RESULTING IN SPRAIN OR STRAIN TO ARM.	3	10	992
EMPLOYEE WAS LIFTING STD MTL CONT AND HE OVEREXERTED SELF WITH STD MTL CONT WHICH WAS HVY (ROCKS) RESULTING IN SPRAIN OR STRAIN TO ARM.	1	0	12
EMPLOYEE WAS LIFTING PLASTIC BAG AND HE WAS STRUCK BY GLASS WHICH FELL OUT OF BOTTOM OF CONT RESULTING IN CUT/PUNCTURE TO ARM.	1	0	55

PROFILE	NO. INJ	DAYS	COSTS
EMPLOYEE WAS LIFTING.PLASTIC BAG AND HE WAS STRUCK BY ROCKS/CONCRETE/DIRT WHICH FELL OUT OF BOTTOM OF CONT RESULTING IN BRUISE TO FOOT.	1	0	57
EMPLOYEE WAS LIFTING STD MTL CONT AND HE OVEREXERTED SELF WITH STD MTL CONT WHICH WAS HVY (WATER FILLED) RESULTING IN SPRAIN OR STRAIN TO ABDOMEN.	1	4	105
EMPLOYEE WAS LIFTING STD MTL CONT AND HE OVEREXERTED SELF WITH STD MTL CONT WHICH WAS FULL AND RECESSED RESULTING IN SPRAIN OR STRAIN TO BACK.	1	4	71
EMPLOYEE WAS LIFTING STD MTL CONT AND HE FELL ON GROUND RESULTING IN FRACTURE TO KNEE.	1	23	1070
EMPLOYEE WAS LIFTING TOTE BARREL AND HE OVEREXERTED SELF WITH TOTE BARREL WHICH WAS HVY (ROCKS) AND HNDLD WITH COWRKR RESULTING IN SPRAIN OR STRAIN TO BACK.	1	8	540
EMPLOYEE WAS LIFTING STD MTL CONT AND HE OVEREXERTED SELF WITH STD MTL CONT WHICH WAS HVY (TIGHTLY PACKED) RESULTING IN SPRAIN OR STRAIN TO WRIST.	1	3	180
EMPLOYEE WAS LIFTING OIL DRUM AND HE OVEREXERTED SELF WITH OIL DRUM WHICH WAS UNUSUALLY HEAVY AND SLIPPERY (WET) RESULTING IN SPRAIN OR STRAIN TO BACK.	1	7	102
EMPLOYEE WAS LIFTING STD MTL CONT AND HE WAS HURT BY HANDLING STD MTL CONT WHICH WAS UNUSUALLY HEAVY AND HAD SHARP EDGES RESULTING IN CUT/PUNCTURE TO WRIST.	1	4	383
EMPLOYEE WAS LIFTING STD MTL CONT AND HE SLIPPED STEPPING ON PAVEMENT RESULTING IN SPRAIN OR STRAIN TO BACK.	1	0	13
EMPLOYEE WAS LIFTING OTHER CONT TYPE AND HE OVEREXERTED SELF WITH OTHER CONT TYPE WHICH WAS HVY (PAPER) RESULTING IN SPRAIN OR STRAIN TO BACK.	1	1	20
EMPLOYEE WAS LIFTING OTHER CONT TYPE AND HE OVEREXERTED SELF WITH OTHER CONT TYPE WHICH WAS UNUSUALLY HEAVY RESULTING IN SPRAIN OR STRAIN TO BACK.	1	15	556
EMPLOYEE WAS LIFTING PLASTIC CAN AND HE STRUCK SELF WITH PLASTIC CAN WHICH HAD A PROTRUDING NAIL RESULTING IN CUT/PUNCTURE TO LEG.	1	3	199
EMPLOYEE WAS LIFTING OTHER CONT TYPE AND HE OVEREXERTED SELF WITH OTHER CONT TYPE WHICH WAS HVY (TIGHTLY PACKED) RESULTING IN SPRAIN OR STRAIN TO BACK.	1	3	317
EMPLOYEE WAS LIFTING PLASTIC BAG AND HE WAS HURT BY HANDLING PLASTIC BAG WHICH HAD PROTRUDING GLASS RESULTING IN CUT/PUNCTURE TO ELBOW.	1	0	79
EMPLOYEE WAS LIFTING BULK CONT (1-10 YD) AND HE STRUCK SELF WITH BULK CONT(1-10 YD) WHICH WAS FULL AND HNDLD WITH COWRKR RESULTING IN FRACTURE TO ANKLE.	1	124	7764
EMPLOYEE WAS LIFTING WHEELED CART AND HE MADE SUDDEN MOVEMENT IN CATCHING WHEELED CART WHICH WAS UNUSUALLY HEAVY AND HNDLD WITH COWRKR RESULTING IN SPRAIN OR STRAIN TO WRIST.	1	23	1955
EMPLOYEE WAS LIFTING CARDBD BOX AND HE OVEREXERTED SELF WITH CARDBOARD BOX WHICH WAS HVY (YARD CLIPPINGS) RESULTING IN SPRAIN OR STRAIN TO BACK.	1	2	229
EMPLOYEE WAS LIFTING STD MTL CONT AND HE STRUCK AGAINST FENCE RESULTING IN CUT/PUNCTURE TO HAND.	1	0	53
EMPLOYEE WAS LIFTING CARDBD BOX AND HE MADE SUDDEN MOVEMENT IN CATCHING CARDBOARD BOX WHICH WAS UNUSUALLY HEAVY AND HAD THE BOTTOM FALL OUT RESULTING IN SPRAIN OR STRAIN TO BACK.	2	3	522
EMPLOYEE WAS LIFTING PLASTIC BAG AND HE STRUCK SELF WITH PLASTIC BAG WHICH HAD PROTRUDING GLASS RESULTING IN CUT/PUNCTURE TO ARM.	1	5	474
EMPLOYEE WAS LIFTING STD MTL CONT AND HE WAS HURT BY HANDLING STD MTL CONT WHICH WAS FULL AND HAD SHARP EDGES RESULTING IN CUT/PUNCTURE TO THUMB.	1	3	206
EMPLOYEE WAS LIFTING CARDBD BOX AND HE OVEREXERTED SELF WITH CARDBOARD BOX WHICH WAS FULL RESULTING IN SPRAIN OR STRAIN TO BACK.	1	7	309
EMPLOYEE WAS LIFTING STD MTL CONT AND HE SLIPPED FROM STEP OF VEH ONTO PAVEMENT RESULTING IN SPRAIN OR STRAIN TO BACK.	1	34	2344
EMPLOYEE WAS LIFTING STD MTL CONT AND HE MADE SUDDEN MOVEMENT IN CATCHING STD MTL CONT WHICH WAS FULL AND HAD SLIPPED FROM HIS HANDS RESULTING IN SPRAIN OR STRAIN TO BACK.	1	0	19
EMPLOYEE WAS LIFTING WOOD AND HE OVEREXERTED SELF WITH WOOD RESULTING IN SPRAIN OR STRAIN TO BACK.	1	15	684
EMPLOYEE WAS LIFTING STD MTL CONT AND HE MADE SUDDEN MOVEMENT IN CATCHING STD MTL CONT WHICH WAS UNUSUALLY HEAVY AND HAD SLIPPED FROM HIS HANDS RESULTING IN SPRAIN OR STRAIN TO SHOULDER.	1	0	31
EMPLOYEE WAS LIFTING STD MTL CONT AND HE FELL WHILE ON DEPRESSION AND STRK AGNST STD MTL CONT RESULTING IN BRUISE TO FINGERS.	1	0	73

PROFILE	NO. INJ	DAYS	COSTS
EMPLOYEE WAS LIFTING STD MTL CONT AND HE OVEREXERTED SELF WITH STD MTL CONT WHICH WAS FULL RESULTING IN SPRAIN OR STRAIN TO NECK.	1	0	40
EMPLOYEE WAS LIFTING WHEELED CART AND HE OVEREXERTED SELF WITH WHEELED CART WHICH WAS UNUSUALLY HEAVY RESULTING IN SPRAIN OR STRAIN TO NECK.	1	2	128
EMPLOYEE WAS LIFTING CARDBD BOX AND HE WAS HURT BY HANDLING CARDBOARD BOX WHICH HAD PROTRUDING GLASS AND SLIPPERY (WET) RESULTING IN CUT/PUNCTURE TO ARM.	1	5	419
EMPLOYEE WAS LIFTING OIL DRUM AND HE WAS HURT BY HANDLING OIL DRUM WHICH WAS UNUSUALLY HEAVY AND HAD SHARP EDGES RESULTING IN CUT/PUNCTURE TO FINGERS.	1	0	86
EMPLOYEE WAS LIFTING OTHER CONT TYPE AND HE STRUCK SELF WITH OTHER CONT TYPE WHICH HAD PROTRUDING GLASS RESULTING IN CUT/PUNCTURE TO LEG.	1	5	264
EMPLOYEE WAS LIFTING OTHER CONT TYPE AND HE WAS HURT BY HANDLING OTHER CONT TYPE WHICH HAD PROTRUDING GLASS RESULTING IN CUT/PUNCTURE TO THUMB.	1	0	16
EMPLOYEE WAS LIFTING TOTE BARREL AND HE MADE SUDDEN MOVEMENT RESULTING IN SPRAIN OR STRAIN TO SHOULDER.	1	0	0
EMPLOYEE WAS LIFTING PLASTIC BAG AND HE MADE SUDDEN MOVEMENT IN CATCHING PLASTIC BAG WHICH WAS FULL AND HAD SLIPPED FROM HIS HANDS RESULTING IN SPRAIN OR STRAIN TO GROIN.	1	0	46
EMPLOYEE WAS LIFTING CARDBD BOX AND HE OVEREXERTED SELF WITH CARDBOARD BOX WHICH WAS HVY (WATER FILLED) RESULTING IN SPRAIN OR STRAIN TO BACK.	1	12	847
EMPLOYEE WAS LIFTING STD MTL CONT AND HE STRUCK AGAINST STD MTL CONT RESULTING IN BRUISE TO FINGERS.	1	0	63
EMPLOYEE WAS LIFTING STD MTL CONT AND HE MADE SUDDEN MOVEMENT RESULTING IN SPRAIN OR STRAIN TO WRIST.	1	0	115
EMPLOYEE WAS LIFTING BULK CONT LID AND HE OVEREXERTED SELF WITH BULK CONT LID RESULTING IN HEART ATTACK TO INTERNAL ORGANS.	1	0	125
EMPLOYEE WAS LIFTING TOTE BARREL AND HE STRUCK SELF WITH TOTE BARREL WHICH WAS EMPTY AND HAD SLIPPED FROM HIS HANDS RESULTING IN NOSEBLEED TO NOSE.	1	3	242
EMPLOYEE WAS LIFTING CONT LID AND HE GOT AIRBORNE PARTICLES IN EYE RESULTING IN EYE IRRITATION TO EYES.	1	2	88
EMPLOYEE WAS LIFTING STD MTL CONT AND HE SLIPPED STEPPING ON WET GROUND RESULTING IN SPRAIN OR STRAIN TO BACK.	1	20	919
EMPLOYEE WAS LIFTING CARDBD BARREL AND HE OVEREXERTED SELF WITH CARDBOARD BARREL WHICH WAS UNUSUALLY HEAVY AND UNUSUALLY LG RESULTING IN SPRAIN OR STRAIN TO BACK.	1	0	214
EMPLOYEE WAS LIFTING STD MTL CONT AND HE OVEREXERTED SELF WITH STD MTL CONT WHICH WAS UNUSUALLY HEAVY AND RECESSED RESULTING IN SPRAIN OR STRAIN TO GROIN.	1	17	334
EMPLOYEE WAS LIFTING TOTE BARREL AND HE STRUCK SELF WITH TOTE BARREL WHICH WAS FULL AND HAD SLIPPED FROM HIS HANDS RESULTING IN BRUISE TO SHOULDER.	1	0	16
EMPLOYEE WAS LIFTING CARDBD BOX AND HE OVEREXERTED SELF WITH CARDBOARD BOX WHICH WAS UNUSUALLY HEAVY AND HNDLD WITH COWRKR RESULTING IN SPRAIN OR STRAIN TO MULTIPLE BODY PARTS.	1	50	1270
EMPLOYEE WAS LIFTING STD MTL CONT AND HE STRUCK SELF WITH STD MTL CONT WHICH WAS FULL AND HAD SLIPPED FROM HIS HANDS RESULTING IN BRUISE TO KNEE.	1	0	63
EMPLOYEE WAS LIFTING PLASTIC BAG AND HE GOT WASTE PARTICLES IN EYE RESULTING IN EYE IRRITATION TO EYES.	1	0	35
EMPLOYEE WAS LIFTING STD MTL CONT AND HE SLIPPED STEPPING ON SLIPPERY WASTE ON GROUND RESULTING IN SPRAIN OR STRAIN TO BACK.	1	7	393
EMPLOYEE WAS LIFTING PLASTIC BAG AND HE STRUCK AGAINST BUNDLED SHRUBBERY RESULTING IN ABRASIONS TO EYES.	1	0	30
EMPLOYEE WAS LIFTING TOTE BARREL AND HE OVEREXERTED SELF WITH TOTE BARREL WHICH WAS FULL RESULTING IN SPRAIN OR STRAIN TO WRIST.	1	2	156
EMPLOYEE WAS LIFTING STD MTL CONT AND HE WAS STRUCK BY CONT HANDLED BY COWORKER RESULTING IN CUT/PUNCTURE TO LEG.	1	1	53
EMPLOYEE WAS LIFTING TOTE BARREL AND HE MADE SUDDEN MOVEMENT RESULTING IN SPRAIN OR STRAIN TO ANKLE.	1	2	129
EMPLOYEE WAS LIFTING PLASTIC CAN AND HE SLIPPED WHILE ON WET CURB AND STRK AGNST BACK OF VEH RESULTING IN DENTAL INJURY TO MOUTH.	1	0	65

PROFILE	NO. INJ	DAYS	COSTS
EMPLOYEE WAS LIFTING TOTE BARREL AND HE OVEREXERTED SELF WITH TOTE BARREL WHICH WAS UNUSUALLY HEAVY RESULTING IN SPRAIN OR STRAIN TO WRIST.	1	2	45
EMPLOYEE WAS LIFTING TOTE BARREL AND HE STRUCK SELF WITH TOTE BARREL WHICH WAS FULL RESULTING IN BRUISE TO SHOULDER.	1	5	331
EMPLOYEE WAS LIFTING OTHER CONT TYPE AND HE OVEREXERTED SELF WITH OTHER CONT TYPE WHICH WAS EMPTY AND UNUSUALLY LG RESULTING IN SPRAIN OR STRAIN TO BACK.	1	16	977
EMPLOYEE WAS LIFTING BULK CONT (1-10 YD) AND HE STRUCK SELF WITH BULK CONT(1-10 YD) WHICH WAS FULL RESULTING IN BRUISE TO FOOT.	1	25	1947
EMPLOYEE WAS LIFTING PLASTIC BAG AND HE OVEREXERTED SELF WITH PLASTIC BAG WHICH WAS UNUSUALLY HEAVY RESULTING IN SPRAIN OR STRAIN TO LEG.	1	10	900
EMPLOYEE WAS LIFTING PLASTIC BAG AND HE OVEREXERTED SELF RESULTING IN SPRAIN OR STRAIN TO BACK.	1	5	164
EMPLOYEE WAS LIFTING STD MTL CONT AND HE OVEREXERTED SELF WITH STD MTL CONT WHICH WAS HVY (YARD CLIPPINGS) RESULTING IN SPRAIN OR STRAIN TO SHOULDER.	1	0	24
EMPLOYEE WAS LIFTING TOTE BARREL AND HE OVEREXERTED SELF WITH TOTE BARREL WHICH WAS HVY (WATER FILLED) RESULTING IN SPRAIN OR STRAIN TO ELBOW.	1	6	214
EMPLOYEE WAS LIFTING STD MTL CONT AND HE WAS HURT BY HANDLING STD MTL CONT WHICH HAD PROTRUDING WASTE RESULTING IN CUT/PUNCTURE TO FINGERS.	1	0	41
EMPLOYEE WAS LIFTING OTHER CONT TYPE AND HE STRUCK SELF WITH OTHER CONT TYPE WHICH WAS FULL AND HNDLD WITH COWRKR RESULTING IN BRUISE TO CHEST.	1	1	53
EMPLOYEE WAS LIFTING STD MTL CONT AND HE FELL ON WET PAVEMENT RESULTING IN ABRASIONS TO KNEE.	1	11	583
EMPLOYEE WAS LIFTING STD MTL CONT AND HE STEPPED ON NAIL RESULTING IN CUT/PUNCTURE TO FOOT.	2	1	109
EMPLOYEE WAS LIFTING STD MTL CONT AND HE OVEREXERTED SELF WITH STD MTL CONT WHICH WAS HVY (WATER FILLED) RESULTING IN SPRAIN OR STRAIN TO SHOULDER.	1	3	107
EMPLOYEE WAS LIFTING STD MTL CONT AND HE OVEREXERTED SELF WITH STD MTL CONT WHICH WAS UNUSUALLY HEAVY RESULTING IN SPRAIN OR STRAIN TO TRUNK.	2	5	232
EMPLOYEE WAS LIFTING STD MTL CONT AND HE SLIPPED STEPPING ON ICY GROUND RESULTING IN SPRAIN OR STRAIN TO BACK.	1	3	94
EMPLOYEE WAS LIFTING STD MTL CONT AND HE STRUCK SELF WITH STD MTL CONT WHICH WAS FULL AND HAD SLIPPED FROM HIS HANDS RESULTING IN CUT/PUNCTURE TO LEG.	1	0	12
EMPLOYEE WAS LIFTING WHEELED CART AND HE OVEREXERTED SELF WITH WHEELED CART WHICH WAS FULL AND UNUSUALLY LG RESULTING IN SPRAIN OR STRAIN TO BACK.	1	0	37
EMPLOYEE WAS LIFTING WHEELED CART AND HE OVEREXERTED SELF WITH WHEELED CART WHICH WAS UNUSUALLY HEAVY RESULTING IN SPRAIN OR STRAIN TO GROIN.	1	1	16
EMPLOYEE WAS LIFTING PLASTIC BAG AND HE WAS HURT BY HANDLING PLASTIC BAG WHICH HAD PROTRUDING SHRUBBERY RESULTING IN CUT/PUNCTURE TO FINGERS.	1	3	202
EMPLOYEE WAS LIFTING CARDBD BOX AND HE OVEREXERTED SELF WITH CARDBOARD BOX WHICH WAS UNUSUALLY HEAVY RESULTING IN SPRAIN OR STRAIN TO BACK.	1	16	674
EMPLOYEE WAS LIFTING PLASTIC BAG AND HE OVEREXERTED SELF WITH PLASTIC BAG WHICH WAS FULL RESULTING IN SPRAIN OR STRAIN TO ARM.	1	13	686
EMPLOYEE WAS LIFTING TOTE BARREL AND HE FELL ON GROUND RESULTING IN SPRAIN OR STRAIN TO BACK.	1	2	112
EMPLOYEE WAS LIFTING PLASTIC BAG AND HE WAS STRUCK BY PLASTIC BAG WHICH HAD PROTRUDING WASTE RESULTING IN CUT/PUNCTURE TO LEG.	1	1	71
EMPLOYEE WAS LIFTING PLASTIC BAG AND HE WAS HURT BY HANDLING PLASTIC BAG WHICH HAD PROTRUDING GLASS RESULTING IN CUT/PUNCTURE TO LEG.	1	0	70
EMPLOYEE WAS LIFTING TOTE BARREL AND HE OVEREXERTED SELF WITH TOTE BARREL WHICH WAS HVY (WATER FILLED) AND UNUSUALLY LG RESULTING IN SPRAIN OR STRAIN TO TRUNK.	1	2	37
EMPLOYEE WAS LIFTING PLASTIC BAG AND HE FELL ON OBJ ON GROUND RESULTING IN CUT/PUNCTURE TO LEG.	1	7	398
EMPLOYEE WAS LIFTING PLASTIC BAG AND HE WAS HURT BY HANDLING PLASTIC BAG WHICH HAD PROTRUDING WASTE RESULTING IN CUT/PUNCTURE TO ARM.	1	0	35
EMPLOYEE WAS LIFTING STD MTL CONT AND HE WAS STRUCK BY CONTAINER LID OBJ ON GROUND RESULTING IN BRUISE TO KNEE.			

PROFILE	NO. INJ	DAYS	COSTS
EMPLOYEE WAS LIFTING STD MTL CONT AND HE OVEREXERTED SELF WITH STD MTL CONT RESULTING IN SPRAIN OR STRAIN TO ARM.	1	5	166
EMPLOYEE WAS LIFTING STD MTL CONT AND HE SLIPPED STEPPING ON WET CURB RESULTING IN SPRAIN OR STRAIN TO ANKLE.	1	5	149
EMPLOYEE WAS LIFTING PLASTIC BAG AND HE OVEREXERTED SELF WITH PLASTIC BAG WHICH WAS HVY (WATER FILLED) RESULTING IN SPRAIN OR STRAIN TO BACK.	1	11	275
EMPLOYEE WAS LIFTING OTHER CONT TYPE AND HE WAS STRUCK BY GLASS WHICH FELL OUT OF TOP OF CONT RESULTING IN CUT/PUNCTURE TO LEG.	1	5	243
EMPLOYEE WAS LIFTING PLASTIC BAG AND HE WAS STRUCK BY STD MTL CONT RESULTING IN UNKNOWN TYPE OF INJURY TO TOES.	1	0	115
EMPLOYEE WAS LIFTING STD MTL CONT AND HE MADE SUDDEN MOVEMENT IN AVOIDING ANIMAL RESULTING IN SPRAIN OR STRAIN TO BACK.	1	6	207
EMPLOYEE WAS LIFTING STD MTL CONT AND HE SLIPPED STEPPING ON WET RUNNING BOARD RESULTING IN SPRAIN OR STRAIN TO BACK.	1	13	399
EMPLOYEE WAS LIFTING CARDBD BOX AND HE OVEREXERTED SELF WITH CARDBOARD BOX WHICH WAS HVY (TIGHTLY PACKED) AND UNUSUALLY LG RESULTING IN SPRAIN OR STRAIN TO GROIN.	1	14	1237
EMPLOYEE WAS LIFTING STD MTL CONT AND HE FELL ON ICY GROUND RESULTING IN BRUISE TO MULTIPLE BODY PARTS.	1	3	113
EMPLOYEE WAS LIFTING STD MTL CONT AND HE OVEREXERTED SELF WITH STD MTL CONT WHICH WAS UNUSUALLY HEAVY RESULTING IN SPRAIN OR STRAIN TO HAND.	1	1	55
EMPLOYEE WAS LIFTING PLASTIC BAG AND HE STRUCK SELF WITH PLASTIC BAG WHICH HAD PROTRUDING SHRUBBERY RESULTING IN EYE IRRITATION TO EYES.	1	0	43
EMPLOYEE WAS LIFTING STD MTL CONT AND HE OVEREXERTED SELF WITH STD MTL CONT WHICH WAS STUCK OR FROZEN TO GRND RESULTING IN SPRAIN OR STRAIN TO BACK.	1	4	372
EMPLOYEE WAS LIFTING STD MTL CONT AND HE FELL WHILE ON RUNNING BOARD AND STRK AGNST RUNNING BOARD RESULTING IN BRUISE TO KNEE.	1	0	30
EMPLOYEE WAS LIFTING STD MTL CONT AND HE STRUCK AGAINST FENCE RESULTING IN INFECTION TO HAND.	1	0	32
EMPLOYEE WAS LIFTING TOTE BARREL AND HE OVEREXERTED SELF WITH TOTE BARREL WHICH WAS UNUSUALLY HEAVY AND UNUSUALLY LG RESULTING IN SPRAIN OR STRAIN TO WRIST.	1	5	268
EMPLOYEE WAS LIFTING STD MTL CONT AND HE FELL ON WET GRASS RESULTING IN SPRAIN OR STRAIN TO SHOULDER.	1	1	101
EMPLOYEE WAS LIFTING STD MTL CONT AND HE OVEREXERTED SELF WITH STD MTL CONT WHICH WAS HVY (ROCKS) AND HNDLD WITH COWRKR RESULTING IN SPRAIN OR STRAIN TO BACK.	1	6	239
EMPLOYEE WAS LIFTING BULK CONT (1-10 YD) AND HE OVEREXERTED SELF WITH BULK CONT(1-10 YD) WHICH WAS EMPTY AND HNDLD WITH COWRKR RESULTING IN SPRAIN OR STRAIN TO BACK.	1	4	204
EMPLOYEE WAS LIFTING PLASTIC BAG AND HE OVEREXERTED SELF WITH PLASTIC BAG WHICH HAD THE BOTTOM FALL OUT RESULTING IN SPRAIN OR STRAIN TO BACK.	1	12	809
EMPLOYEE WAS LIFTING CONT LID AND HE OVEREXERTED SELF WITH CONTAINER LID RESULTING IN SPRAIN OR STRAIN TO BACK.	1	0	90
EMPLOYEE WAS LIFTING TOTE BARREL AND HE OVEREXERTED SELF WITH TOTE BARREL WHICH WAS UNUSUALLY HEAVY RESULTING IN SPRAIN OR STRAIN TO SHOULDER.	1	4	71
EMPLOYEE WAS LIFTING PLASTIC BAG AND HE WAS HURT BY HANDLING PLASTIC BAG WHICH HAD A PROTRUDING HYPODERMIC NEEDLE RESULTING IN CUT/PUNCTURE TO FINGERS.	1	0	52
EMPLOYEE WAS LIFTING STD MTL CONT AND HE FELL ON PAVEMENT RESULTING IN BRUISE TO KNEE.	1	7	363
EMPLOYEE WAS LIFTING CARDBD BOX AND HE OVEREXERTED SELF WITH CARDBOARD BOX WHICH WAS HVY (YARD CLIPPINGS) AND SLIPPERY (WET) RESULTING IN SPRAIN OR STRAIN TO BACK.	1	4	174
EMPLOYEE WAS LIFTING TOTE BARREL AND HE FELL ON SLIPPERY GROUND AND HNDLD WITH COWRKR RESULTING IN SPRAIN OR STRAIN TO BACK.	1	0	72
TOTAL	533	4128	202583

FIGURE 1-8

ALL USERS
DETAILED DESCRIPTION OF
DUMPING CONTAINER ACCIDENTS
OSHA RECORDABLE INJURIES ONLY

REPORTING PERIOD: DECEMBER 1975 - DECEMBER 1976

THIS PROFILE IS A FORMATTED SENTENCE CONSISTING OF ACTIVITY, ACCIDENT TYPE, NATURE OF INJURY AND PART OF BODY.

PROFILE	NO. INJ	DAYS	COSTS
EMPLOYEE WAS DUMPING STD MTL CONT AND HE GOT WASTE PARTICLES IN EYE RESULTING IN EYE IRRITATION TO EYES.	43	19	3189
EMPLOYEE WAS DUMPING STD MTL CONT AND HE OVEREXERTED SELF WITH STD MTL CONT WHICH WAS UNUSUALLY HEAVY RESULTING IN SPRAIN OR STRAIN TO TRUNK.	2	12	624
EMPLOYEE WAS DUMPING OTHER CONT TYPE AND HE STRUCK SELF WITH OTHER CONT TYPE WHICH WAS EMPTY AND HAD SLIPPED FROM HIS HANDS RESULTING IN FRACTURE TO FOOT.	1	29	1391
EMPLOYEE WAS DUMPING STD MTL CONT AND HE STRUCK AGAINST BACK OF VEH RESULTING IN BRUISE TO SHOULDER.	1	17	919
EMPLOYEE WAS DUMPING STD MTL CONT AND HE OVEREXERTED SELF WITH STD MTL CONT WHICH WAS FULL RESULTING IN SPRAIN OR STRAIN TO HIPS.	1	1	67
EMPLOYEE WAS DUMPING STD MTL CONT AND HE OVEREXERTED SELF WITH STD MTL CONT WHICH WAS UNUSUALLY HEAVY RESULTING IN SPRAIN OR STRAIN TO BACK.	14	120	5279
EMPLOYEE WAS DUMPING CARDBD BOX AND HE WAS STRUCK BY VEH RESULTING IN FRACTURE TO FOOT.	1	3	203
EMPLOYEE WAS DUMPING BULK CONT (1-10 YD) AND HE WAS CAUGHT BETWEEN CONT & VEH (CONT WAS FALLING) RESULTING IN BRUISE TO HAND.	1	19	722
EMPLOYEE WAS DUMPING WHEELED CART AND HE OVEREXERTED SELF WITH WHEELED CART WHICH WAS UNUSUALLY HEAVY AND UNUSUALLY LG RESULTING IN SPRAIN OR STRAIN TO SHOULDER.	1	0	214
EMPLOYEE WAS DUMPING STD MTL CONT AND HE STRUCK AGAINST EDGE OF HOPPER RESULTING IN FRACTURE TO HAND.	1	52	1218
EMPLOYEE WAS DUMPING STD MTL CONT AND HE WAS STRUCK BY CHEMICAL WHICH FELL OUT OF TOP OF CONT RESULTING IN CHEMICAL BURN TO EYES.	1	0	22
EMPLOYEE WAS DUMPING STD MTL CONT AND HE OVEREXERTED SELF WITH STD MTL CONT WHICH WAS FULL RESULTING IN SPRAIN OR STRAIN TO BACK.	16	168	9017
EMPLOYEE WAS DUMPING STD MTL CONT AND HE OVEREXERTED SELF WITH STD MTL CONT WHICH WAS FULL RESULTING IN SPRAIN OR STRAIN TO ARM.	2	10	598
EMPLOYEE WAS DUMPING PLASTIC BAG AND HE GOT AIRBORNE PARTICLES IN EYE RESULTING IN ABRASIONS TO EYES.	1	0	7
EMPLOYEE WAS DUMPING STD MTL CONT AND HE MADE SUDDEN MOVEMENT IN AVOIDING ANIMAL RESULTING IN OTHER TYPE OF INJURY TO BACK.	1	3	394
EMPLOYEE WAS DUMPING STD MTL CONT AND HE WAS STRUCK BY CHEMICAL WHICH FELL OUT OF TOP OF CONT RESULTING IN CHEMICAL BURN TO ABDOMEN.	2	181	7550
EMPLOYEE WAS DUMPING WHEELED CART AND HE STRUCK AGAINST SIDE OF HOPPER RESULTING IN BRUISE TO ELBOW.	1	1	88
EMPLOYEE WAS DUMPING STD MTL CONT AND HE STRUCK AGAINST EDGE OF HOPPER RESULTING IN BRUISE TO ELBOW.	4	6	1549
EMPLOYEE WAS DUMPING BULK CONT (1-10 YD) AND HE WAS CAUGHT BETWEEN BULK CONT & VEH RESULTING IN ...FRACTURE TO FINGERS.	1	3	191
EMPLOYEE WAS DUMPING STD MTL CONT AND HE SLIPPED STEPPING ON INCLINED GROUND RESULTING IN SPRAIN OR STRAIN TO BACK.	1	8	760
EMPLOYEE WAS DUMPING NSTD MTL CONT AND HE WAS STRUCK BY PARTICLES IN WASTE WHICH WAS EJTD FROM HOPPER RESULTING IN EYE IRRITATION TO EYES.	1	0	85
EMPLOYEE WAS DUMPING STD MTL CONT AND HE WAS CAUGHT BETWEEN CONT & EDGE OF HOPPER RESULTING IN CUT/PUNCTURE TO FINGERS.	4	0	299
EMPLOYEE WAS DUMPING STD MTL CONT AND HE WAS STRUCK BY STD MTL CONT WHICH WAS FULL AND HAD BOUNCED BK FM HOPPER RESULTING IN BRUISE TO SCALP.	1	4	208
EMPLOYEE WAS DUMPING STD MTL CONT AND HE WAS STRUCK BY CONT HANDLED BY COWORKER RESULTING IN UNKNOWN TYPE OF INJURY TO FACE.	1	4	118
EMPLOYEE WAS DUMPING PLASTIC CAN AND HE SLIPPED WHILE ON WET PAVEMENT AND STRK AGNST BACK OF VEH RESULTING IN SPRAIN OR STRAIN TO FINGERS.	1	0	[illegible]

PROFILE	NO. INJ	DAYS	COSTS
EMPLOYEE WAS DUMPING CARDBD BOX AND HE OVEREXERTED SELF WITH CARDBOARD BOX WHICH WAS UNUSUALLY HEAVY RESULTING IN HERNIA TO GROIN.	1	26	1855
EMPLOYEE WAS DUMPING STD MTL CONT AND HE SLIPPED STEPPING ON PAVEMENT RESULTING IN SPRAIN OR STRAIN TO KNEE.	1	18	75
EMPLOYEE WAS DUMPING STD MTL CONT AND HE WAS STRUCK BY BOTTLE WHICH FELL OUT OF TOP OF CONT RESULTING IN BRUISE TO FACE.	1	1	66
EMPLOYEE WAS DUMPING STD MTL CONT AND HE STRUCK SELF WITH STD MTL CONT WHICH WAS FULL AND HNDLD WITH COWRKR RESULTING IN UNKNOWN TYPE OF INJURY TO TOES.	1	4	154
EMPLOYEE WAS DUMPING STD MTL CONT AND HE CONTACTED CAUSTIC OR TOXIC UNKNOWN WASTE RESULTING IN DERMATITIS TO HAND.	1	6	192
EMPLOYEE WAS DUMPING STD MTL CONT AND HE WAS CAUGHT BETWEEN CONT & EDGE OF HOPPER (CONT WAS UNUSUALLY HVY) RESULTING IN SPRAIN OR STRAIN TO FINGERS.	2	130	218
EMPLOYEE WAS DUMPING STD MTL CONT AND HE WAS STRUCK BY GLASS WHICH WAS EJTD FROM HOPPER RESULTING IN CUT/PUNCTURE TO CHEEK.	1	0	20
EMPLOYEE WAS DUMPING STD MTL CONT AND HE SLIPPED STEPPING ON WET GROUND RESULTING IN SPRAIN OR STRAIN TO BACK.	1	1	70
EMPLOYEE WAS DUMPING PLASTIC BAG AND HE STRUCK AGAINST EDGE OF HOPPER RESULTING IN BRUISE TO ELBOW.	1	3	153
EMPLOYEE WAS DUMPING STD MTL CONT AND HE WAS HURT BY HANDLING STD MTL CONT WHICH HAD PROTRUDING WASTE RESULTING IN CUT/PUNCTURE TO HAND.	1	0	32
EMPLOYEE WAS DUMPING NSTD MTL CONT AND HE GOT WASTE PARTICLES IN EYE RESULTING IN EYE IRRITATION TO EYES.	1	1	153
EMPLOYEE WAS DUMPING STD MTL CONT AND HE STRUCK SELF WITH STD MTL CONT WHICH WAS FULL AND HAD SLIPPED FROM HIS HANDS RESULTING IN BRUISE TO TOES.	1	4	232
EMPLOYEE WAS DUMPING PLASTIC BAG AND HE SLIPPED STEPPING ON ROCKY GROUND RESULTING IN SPRAIN OR STRAIN TO ANKLE.	1	0	43
EMPLOYEE WAS DUMPING STD MTL CONT AND HE OVEREXERTED SELF WITH STD MTL CONT WHICH WAS FULL RESULTING IN SPRAIN OR STRAIN TO SHOULDER.	7	23	1060
EMPLOYEE WAS DUMPING STD MTL CONT AND HE FELL FROM STEP OF VEH ONTO PAVEMENT RESULTING IN INFLAMMATION OF THE JOINTS TO LEG.	1	17	76
EMPLOYEE WAS DUMPING PLASTIC BAG AND HE GOT AIRBORNE PARTICLES IN EYE RESULTING IN EYE IRRITATION TO EYES.	1	0	63
EMPLOYEE WAS DUMPING STD MTL CONT AND HE WAS CAUGHT BETWEEN CONT & EDGE OF HOPPER (CONT HANDLE BROKE) RESULTING IN BRUISE TO FINGERS.	1	14	639
EMPLOYEE WAS DUMPING STD MTL CONT AND HE OVEREXERTED SELF WITH STD MTL CONT WHICH WAS UNUSUALLY HEAVY AND BEING HNDLD W OTHER CONT RESULTING IN SPRAIN OR STRAIN TO BACK.	1	13	16
EMPLOYEE WAS DUMPING STD MTL CONT AND HE WAS CAUGHT BETWEEN CONT & EDGE OF HOPPER (CONT WAS UNUSUALLY HVY) RESULTING IN SPRAIN OR STRAIN TO ARM.	1	6	278
EMPLOYEE WAS DUMPING PLASTIC BAG AND HE STRUCK AGAINST UNBUNDLED SHRUBBERY WHICH WAS PROTRUDING FM VEH RESULTING IN BRUISE TO HAND.	1	1	72
EMPLOYEE WAS DUMPING PLASTIC BAG AND HE GOT WASTE PARTICLES IN EYE RESULTING IN EYE IRRITATION TO EYES.	1	0	72
EMPLOYEE WAS DUMPING STD MTL CONT AND HE WAS STRUCK BY CONT HANDLED BY COWORKER RESULTING IN BRUISE TO FOOT.	1	10	410
EMPLOYEE WAS DUMPING STD MTL CONT AND HE WAS HURT BY HANDLING STD MTL CONT WHICH WAS FULL AND HAD PROTRUDING GLASS RESULTING IN CUT/PUNCTURE TO HAND.	1	5	157
EMPLOYEE WAS DUMPING STD MTL CONT AND HE WAS STRUCK BY VEH RESULTING IN BRUISE TO LEG.	1	0	60
EMPLOYEE WAS DUMPING STD MTL CONT AND HE WAS STRUCK BY CONT HANDLED BY COWORKER RESULTING IN BRUISE TO ELBOW.	2	4	231
EMPLOYEE WAS DUMPING STD MTL CONT AND HE OVEREXERTED SELF WITH STD MTL CONT WHICH WAS UNUSUALLY HEAVY AND HNDLD WITH COWRKR RESULTING IN SPRAIN OR STRAIN TO BACK.	1	27	885

PROFILE	NO. INJ	DAYS	COSTS
EMPLOYEE WAS DUMPING STD MTL CONT AND HE FELL ON OBJ ON GROUND RESULTING IN BRUISE TO SHOULDER.	1	2	62
EMPLOYEE WAS DUMPING STD MTL CONT AND HE FELL ON GRAVEL RESULTING IN BRUISE TO SHOULDER.	1	11	309
EMPLOYEE WAS DUMPING STD MTL CONT AND HE WAS HURT BY HANDLING STD MTL CONT WHICH HAD PROTRUDING GLASS RESULTING IN CUT/PUNCTURE TO FINGERS.	2	4	200
EMPLOYEE WAS DUMPING STD MTL CONT AND HE WAS CAUGHT BETWEEN CONT & EDGE OF HOPPER RESULTING IN OTHER TYPE OF INJURY TO FINGERS.	1	0	30
EMPLOYEE WAS DUMPING PLASTIC BAG AND HE WAS STRUCK BY PLASTIC BAG RESULTING IN CUT/PUNCTURE TO FACE.	1	12	297
EMPLOYEE WAS DUMPING CARDBD BOX AND HE GOT WASTE PARTICLES IN EYE RESULTING IN EYE IRRITATION TO EYES.	1	0	44
EMPLOYEE WAS DUMPING UNK CONT TYPE AND HE GOT AIRBORNE PARTICLES IN EYE RESULTING IN EYE IRRITATION TO EYES.	1	2	101
EMPLOYEE WAS DUMPING STD MTL CONT AND HE WAS HURT BY HANDLING STD MTL CONT WHICH HAD PROTRUDING WASTE RESULTING IN CUT/PUNCTURE TO FINGERS.	1	3	159
EMPLOYEE WAS DUMPING BULK CONT (1-10 YD) AND HE OVEREXERTED SELF WITH BULK CONT(1-10 YD) RESULTING IN SPRAIN OR STRAIN TO FINGERS.	1	0	66
EMPLOYEE WAS DUMPING STD MTL CONT AND HE WAS STRUCK BY CHEMICAL WHICH FELL OUT OF TOP OF CONT RESULTING IN DERMATITIS TO ARM.	1	1	68
EMPLOYEE WAS DUMPING STD MTL CONT AND HE WAS HURT BY HANDLING STD MTL CONT WHICH WAS FULL AND HAD SHARP EDGES RESULTING IN CUT/PUNCTURE TO ARM.	1	0	20
EMPLOYEE WAS DUMPING STD MTL CONT AND HE STRUCK AGAINST EDGE OF HOPPER RESULTING IN BRUISE TO WRIST.	1	0	44
EMPLOYEE WAS DUMPING STD MTL CONT AND HE SLIPPED FROM RUNNING BOARD ONTO PAVEMENT RESULTING IN SPRAIN OR STRAIN TO LEG.	1	0	55
EMPLOYEE WAS DUMPING OTHER CONT TYPE AND HE OVEREXERTED SELF WITH OTHER CONT TYPE WHICH WAS UNUSUALLY HEAVY AND UNUSUALLY LG RESULTING IN SPRAIN OR STRAIN TO SHOULDER.	1	0	20
EMPLOYEE WAS DUMPING STD MTL CONT AND HE WAS STRUCK BY GLASS WHICH FELL OUT OF TOP OF CONT RESULTING IN CUT/PUNCTURE TO THUMB.	1	0	84
EMPLOYEE WAS DUMPING STD MTL CONT AND HE GOT WASTE PARTICLES IN EYE RESULTING IN ABRASIONS TO EYES.	2	0	122
EMPLOYEE WAS DUMPING STD MTL CONT AND HE STRUCK AGAINST SIDE OF VEH RESULTING IN BRUISE TO ELBOW.	3	0	176
EMPLOYEE WAS DUMPING STD MTL CONT AND HE WAS STRUCK BY GLASS WHICH FELL OUT OF TOP OF CONT RESULTING IN CUT/PUNCTURE TO HAND.	2	0	64
EMPLOYEE WAS DUMPING STD MTL CONT AND HE MADE SUDDEN MOVEMENT IN CATCHING STD MTL CONT WHICH WAS FULL AND SLIPPERY (WET) RESULTING IN SPRAIN OR STRAIN TO BACK.	1	9	677
EMPLOYEE WAS DUMPING STD MTL CONT AND HE STRUCK AGAINST EDGE OF HOPPER RESULTING IN BRUISE TO KNEE.	1	4	235
EMPLOYEE WAS DUMPING STD MTL CONT AND HE STRUCK AGAINST EDGE OF HOPPER RESULTING IN BRUISE TO HAND.	1	0	57
EMPLOYEE WAS DUMPING WHEELED CART AND HE GOT WASTE PARTICLES IN EYE RESULTING IN EYE IRRITATION TO EYES.	1	0	27
EMPLOYEE WAS DUMPING STD MTL CONT AND HE STRUCK AGAINST BACK OF VEH RESULTING IN BRUISE TO ELBOW.	2	9	254
EMPLOYEE WAS DUMPING STD MTL CONT AND HE WAS STRUCK BY CONT HANDLED BY COWORKER RESULTING IN BRUISE TO ARM.	1	0	20
EMPLOYEE WAS DUMPING STD MTL CONT AND HE MADE SUDDEN MOVEMENT RESULTING IN SPRAIN OR STRAIN TO BACK.	2	10	641
EMPLOYEE WAS DUMPING STD MTL CONT AND HE WAS CAUGHT BETWEEN CONT & EDGE OF HOPPER (CONT WAS FALLING) RESULTING IN CUT/PUNCTURE TO FINGERS.	1	4	94
EMPLOYEE WAS DUMPING STD MTL CONT AND HE OVEREXERTED SELF WITH STD MTL CONT WHICH WAS UNUSUALLY HEAVY RESULTING IN SPRAIN OR STRAIN TO ABDOMEN.	1	0	68
EMPLOYEE WAS DUMPING STD MTL CONT AND HE OVEREXERTED SELF WITH STD MTL CONT WHICH WAS UNUSUALLY HEAVY RESULTING IN SPRAIN OR STRAIN TO SHOULDER.	7	96	2913
EMPLOYEE WAS DUMPING BULK CONT (1-10 YD) AND HE STRUCK AGAINST MECHANICAL ARM RESULTING IN BRUISE TO ARM.	1	0	56
EMPLOYEE WAS DUMPING BULK CONT (1-10 YD) AND HE WAS STRUCK BY CHEMICAL WHICH FELL OUT OF TOP OF CONT RESULTING IN DERMATITIS TO ARM.	1	0	48
EMPLOYEE WAS DUMPING STD MTL CONT AND HE MADE SUDDEN MOVEMENT IN CATCHING STD MTL CONT WHICH WAS FULL AND HAD SLIPPED FROM HIS HANDS RESULTING IN SPRAIN OR STRAIN TO BACK.	2	0	99

PROFILE	NO. INJ	DAYS	COSTS
EMPLOYEE WAS DUMPING STD MTL CONT AND HE WAS STRUCK BY BLADE OF VEH RESULTING IN BRUISE TO FINGERS.	1	2	174
EMPLOYEE WAS DUMPING STD MTL CONT AND HE WAS STRUCK BY PIECE OF METAL WHICH FELL OUT OF TOP OF CONT RESULTING IN CUT/PUNCTURE TO ARM.	1	0	50
EMPLOYEE WAS DUMPING STD MTL CONT AND HE OVEREXERTED SELF WITH STD MTL CONT WHICH WAS UNUSUALLY HEAVY RESULTING IN DISLOCATION TO ELBOW.	1	0	32
EMPLOYEE WAS DUMPING STD MTL CONT AND HE WAS CAUGHT BETWEEN CONT & EDGE OF HOPPER RESULTING IN BRUISE TO FINGERS.	4	1	174
EMPLOYEE WAS DUMPING STD MTL CONT AND HE STRUCK SELF WITH STD MTL CONT WHICH HAD PROTRUDING WASTE RESULTING IN BRUISE TO ABDOMEN.	1	1	28
EMPLOYEE WAS DUMPING STD MTL CONT AND HE WAS STRUCK BY GLASS WHICH FELL OUT OF VEH RESULTING IN CUT/PUNCTURE TO LEG.	1	1	82
EMPLOYEE WAS DUMPING STD MTL CONT AND HE OVEREXERTED SELF WITH STD MTL CONT WHICH WAS FULL RESULTING IN SPRAIN OR STRAIN TO ABDOMEN.	2	7	537
EMPLOYEE WAS DUMPING STD MTL CONT AND HE WAS STRUCK BY PARTICLES IN WASTE WHICH WAS EJTD FROM HOPPER RESULTING IN EYE IRRITATION TO EYES.	3	1	141
EMPLOYEE WAS DUMPING STD MTL CONT AND HE WAS STRUCK BY BOTTLE WHICH WAS EJTD FROM HOPPER RESULTING IN CUT/PUNCTURE TO LEG.	1	0	58
EMPLOYEE WAS DUMPING WHEELED CART AND HE MADE SUDDEN MOVEMENT IN CATCHING WHEELED CART WHICH WAS UNUSUALLY HEAVY AND HAD SLIPPED FROM HIS HANDS RESULTING IN SPRAIN OR STRAIN TO BACK.	1	2	132
EMPLOYEE WAS DUMPING STD MTL CONT AND HE FELL WHILE ON PAVEMENT AND STRK AGNST SIDE OF VEH RESULTING IN SPRAIN OR STRAIN TO HAND.	1	0	100
EMPLOYEE WAS DUMPING STD MTL CONT AND HE WAS CAUGHT BETWEEN CONT & EDGE OF HOPPER RESULTING IN SPRAIN OR STRAIN TO FINGERS.	1	14	644
EMPLOYEE WAS DUMPING NSTD MTL CONT AND HE WAS CAUGHT BETWEEN CONT & EDGE OF HOPPER (CONT WAS UNUSUALLY LG) RESULTING IN BRUISE TO FINGERS.	1	2	152
EMPLOYEE WAS DUMPING PLASTIC CAN AND HE MADE SUDDEN MOVEMENT IN CATCHING PLASTIC CAN WHICH WAS FULL AND HAD THE BOTTOM FALL OUT RESULTING IN SPRAIN OR STRAIN TO WRIST.	1	25	1413
EMPLOYEE WAS DUMPING STD MTL CONT AND HE STRUCK AGAINST BACK OF VEH RESULTING IN SPRAIN OR STRAIN TO HAND.	1	0	20
EMPLOYEE WAS DUMPING STD MTL CONT AND HE WAS CAUGHT BETWEEN CONT & EDGE OF HOPPER (CONT WAS UNUSUALLY HVY) RESULTING IN BRUISE TO HAND.	2	7	347
EMPLOYEE WAS DUMPING STD MTL CONT AND HE WAS STRUCK BY VEH RESULTING IN CUT/PUNCTURE TO FOREHEAD.	1	1	58
EMPLOYEE WAS DUMPING STD MTL CONT AND HE WAS CAUGHT BETWEEN CONT & EDGE OF HOPPER RESULTING IN CUT/PUNCTURE TO HAND.	1	0	29
EMPLOYEE WAS DUMPING STD MTL CONT AND HE CONTACTED CAUSTIC OR TOXIC AMMONIA RESULTING IN ASPHYXIATION OR DROWNING TO INTERNAL ORGANS.	1	0	38
EMPLOYEE WAS DUMPING STD MTL CONT AND HE STEPPED ON NAIL RESULTING IN CUT/PUNCTURE TO FOOT.	2	0	77
EMPLOYEE WAS DUMPING STD MTL CONT AND HE WAS STRUCK BY CHEMICAL WHICH FELL OUT OF TOP OF CONT RESULTING IN INFECTION TO FOOT.	1	11	269
EMPLOYEE WAS DUMPING STD MTL CONT AND HE OVEREXERTED SELF WITH STD MTL CONT WHICH WAS UNUSUALLY HEAVY RESULTING IN SPRAIN OR STRAIN TO GROIN.	1	3	102
EMPLOYEE WAS DUMPING CARDBD BOX AND HE MADE SUDDEN MOVEMENT IN CATCHING CARDBOARD BOX WHICH WAS UNUSUALLY HEAVY RESULTING IN SPRAIN OR STRAIN TO BACK.	1	14	494
EMPLOYEE WAS DUMPING STD MTL CONT AND HE STRUCK SELF WITH STD MTL CONT WHICH WAS FULL AND HAD BOUNCED BK FM HOPPER RESULTING IN CUT/PUNCTURE TO FOREHEAD.	1	5	201
EMPLOYEE WAS DUMPING STD MTL CONT AND HE WAS CAUGHT BETWEEN CONT & EDGE OF HOPPER (CONT WAS UNUSUALLY HVY) RESULTING IN CUT/PUNCTURE TO FINGERS.	1	0	55
EMPLOYEE WAS DUMPING TOTE BARREL AND HE OVEREXERTED SELF WITH TOTE BARREL WHICH WAS FULL RESULTING IN SPRAIN OR STRAIN TO BACK.	2	43	1731
EMPLOYEE WAS DUMPING STD MTL CONT AND HE WAS CAUGHT BETWEEN CONT & EDGE OF HOPPER (CONT WAS FALLING) RESULTING IN BRUISE TO HAND.	1	0	52

PROFILE	NO. INJ	DAYS	COSTS
EMPLOYEE WAS DUMPING BULK CONT (1-10 YD) AND HE WAS STRUCK BY BULK CONT(1-10 YD) WHICH WAS FULL RESULTING IN BRUISE TO CHEST.	1	4	133
EMPLOYEE WAS DUMPING STD MTL CONT AND HE MADE SUDDEN MOVEMENT RESULTING IN SPRAIN OR STRAIN TO GROIN.	1	1	95
EMPLOYEE WAS DUMPING STD MTL CONT AND HE GOT AIRBORNE PARTICLES IN EYE RESULTING IN EYE IRRITATION TO EYES.	4	1	165
EMPLOYEE WAS DUMPING STD MTL CONT AND HE WAS STRUCK BY VEH RESULTING IN CUT/PUNCTURE TO LEG.	1	8	318
EMPLOYEE WAS DUMPING PLASTIC CAN AND HE WAS STRUCK BY WOOD WHICH WAS EJTD FROM HOPPER RESULTING IN BRUISE TO ARM.	1	4	196
EMPLOYEE WAS DUMPING PLASTIC CAN AND HE MADE SUDDEN MOVEMENT IN CATCHING PLASTIC CAN WHICH WAS FULL AND HAD SLIPPED FROM HIS HANDS RESULTING IN SPRAIN OR STRAIN TO SHOULDER.	1	5	265
EMPLOYEE WAS DUMPING PLASTIC BAG AND HE WAS STRUCK BY GLASS WHICH FELL OUT OF BOTTOM OF CONT RESULTING IN CUT/PUNCTURE TO ARM.	1	6	373
EMPLOYEE WAS DUMPING STD MTL CONT AND HE STRUCK SELF WITH STD MTL CONT WHICH HAD PROTRUDING GLASS RESULTING IN CUT/PUNCTURE TO ARM.	1	0	63
EMPLOYEE WAS DUMPING STD MTL CONT AND HE OVEREXERTED SELF WITH STD MTL CONT WHICH WAS FULL RESULTING IN SPRAIN OR STRAIN TO THUMB.	1	2	144
EMPLOYEE WAS DUMPING STD MTL CONT AND HE OVEREXERTED SELF WITH STD MTL CONT WHICH WAS UNUSUALLY HEAVY RESULTING IN SPRAIN OR STRAIN TO CHEST.	1	0	20
EMPLOYEE WAS DUMPING STD MTL CONT AND HE WAS STRUCK BY PARTICLES IN WASTE WHICH WAS EJTD FROM HOPPER RESULTING IN BRUISE TO EYES.	1	1	53
EMPLOYEE WAS DUMPING STD MTL CONT AND HE STRUCK AGAINST CAB DOOR RESULTING IN CUT/PUNCTURE TO FINGERS.	1	1	71
EMPLOYEE WAS DUMPING STD MTL CONT AND HE WAS CAUGHT BETWEEN CONT & EDGE OF HOPPER RESULTING IN BRUISE TO WRIST.	2	5	199
EMPLOYEE WAS DUMPING BULK CONT (1-10 YD) AND HE WAS STRUCK BY BULK CONT(1-10 YD) WHICH WAS FULL AND HAD SLIPPED FROM HIS HANDS RESULTING IN BRUISE TO HAND.	1	0	20
EMPLOYEE WAS DUMPING STD MTL CONT AND HE WAS STRUCK BY GLASS WHICH WAS EJTD FROM HOPPER RESULTING IN CUT/PUNCTURE TO EARS.	1	1	81
EMPLOYEE WAS DUMPING NSTD MTL CONT AND HE MADE SUDDEN MOVEMENT IN CATCHING NSTD MTL CONT WHICH WAS UNUSUALLY HEAVY AND HAD SLIPPED FROM HIS HANDS RESULTING IN SPRAIN OR STRAIN TO SHOULDER.	1	18	712
EMPLOYEE WAS DUMPING STD MTL CONT AND HE WAS STRUCK BY CONT HANDLED BY COWORKER WHICH WAS FULL RESULTING IN CUT/PUNCTURE TO SCALP.	1	3	73
EMPLOYEE WAS DUMPING STD MTL CONT AND HE WAS STRUCK BY BOTTLE WHICH FELL OUT OF TOP OF CONT RESULTING IN CUT/PUNCTURE TO ARM.	1	0	48
EMPLOYEE WAS DUMPING WHEELED CART AND HE STRUCK SELF WITH WHEELED CART WHICH WAS FULL RESULTING IN BRUISE TO GROIN.	1	9	523
EMPLOYEE WAS DUMPING STD MTL CONT AND HE OVEREXERTED SELF WITH STD MTL CONT WHICH WAS FULL AND HAD THE BOTTOM FALL OUT RESULTING IN SPRAIN OR STRAIN TO ELBOW.	1	0	46
EMPLOYEE WAS DUMPING STD MTL CONT AND HE WAS HURT BY HANDLING STD MTL CONT WHICH WAS FULL AND HAD SHARP EDGES RESULTING IN CUT/PUNCTURE TO FINGERS.	3	4	280
EMPLOYEE WAS DUMPING STD MTL CONT AND HE STRUCK SELF WITH STD MTL CONT WHICH WAS FULL RESULTING IN DENTAL INJURY TO MOUTH.	1	1	70
EMPLOYEE WAS DUMPING OTHER CONT TYPE AND HE STRUCK AGAINST EDGE OF HOPPER RESULTING IN BRUISE TO FINGERS.	1	0	34
EMPLOYEE WAS DUMPING STD MTL CONT AND HE FELL ON DEPRESSION RESULTING IN SPRAIN OR STRAIN TO ANKLE.	1	0	61
EMPLOYEE WAS DUMPING STD MTL CONT AND HE WAS HURT BY HANDLING STD MTL CONT WHICH HAD PROTRUDING WASTE RESULTING IN CUT/PUNCTURE TO ARM.	1	0	24
EMPLOYEE WAS DUMPING STD MTL CONT AND HE STRUCK AGAINST BACK OF VEH RESULTING IN BRUISE TO WRIST.	1	1	48
EMPLOYEE WAS DUMPING STD MTL CONT AND HE OVEREXERTED SELF WITH STD MTL CONT WHICH WAS FULL RESULTING IN DISLOCATION TO HIPS.	1	83	4429
EMPLOYEE WAS DUMPING STD MTL CONT AND HE WAS STRUCK BY SHARP OBJ WHICH FELL OUT OF TOP OF CONT RESULTING IN CUT/PUNCTURE TO ARM.			

PROFILE	NO. INJ	DAYS	COSTS
EMPLOYEE WAS DUMPING STD MTL CONT AND HE WAS STRUCK BY CHEMICAL WHICH FELL OUT OF TOP OF CONT RESULTING IN DERMATITIS TO UNK BODY PART.	1	1	33
EMPLOYEE WAS DUMPING PLASTIC BAG AND HE WAS STRUCK BY CERAMIC WASTE WHICH FELL OUT OF BOTTOM OF CONT RESULTING IN CUT/PUNCTURE TO LEG.	1	2	156
EMPLOYEE WAS DUMPING STD MTL CONT AND HE WAS STRUCK BY PIECE OF METAL WHICH WAS EJTD FROM HOPPER RESULTING IN CUT/PUNCTURE TO EYES.	1	6	324
EMPLOYEE WAS DUMPING STD MTL CONT AND HE FELL ON WET GROUND RESULTING IN BRUISE TO ARM.	1	0	39
EMPLOYEE WAS DUMPING STD MTL CONT AND HE OVEREXERTED SELF WITH STD MTL CONT WHICH WAS FULL RESULTING IN SPRAIN OR STRAIN TO KNEE.	1	12	94
EMPLOYEE WAS DUMPING STD MTL CONT AND HE CONTACTED CAUSTIC OR TOXIC CHEMICAL RESULTING IN CHEMICAL BURN TO HAND.	1	23	1067
EMPLOYEE WAS DUMPING 300 GAL PLASTIC CONT AND HE OVEREXERTED SELF WITH 300 GAL PLASTIC CONT WHICH WAS FULL RESULTING IN SPRAIN OR STRAIN TO CHEST.	1	0	57
EMPLOYEE WAS DUMPING STD MTL CONT AND HE WAS STRUCK BY CHEMICAL WHICH FELL OUT OF TOP OF CONT RESULTING IN CHEMICAL BURN TO ARM.	1	0	59
EMPLOYEE WAS DUMPING WHEELED CART AND HE OVEREXERTED SELF WITH WHEELED CART WHICH WAS FULL RESULTING IN SPRAIN OR STRAIN TO BACK.	1	14	440
EMPLOYEE WAS DUMPING PLASTIC BAG AND HE FELL ON ROCKY GROUND RESULTING IN CUT/PUNCTURE TO CHEEK.	1	8	48
EMPLOYEE WAS DUMPING STD MTL CONT AND HE WAS STRUCK BY TAILGATE RESULTING IN CUT/PUNCTURE TO FOREHEAD.	1	0	22
EMPLOYEE WAS DUMPING PLASTIC CAN AND HE OVEREXERTED SELF WITH PLASTIC CAN WHICH WAS HVY (TIGHTLY PACKED) RESULTING IN SPRAIN OR STRAIN TO BACK.	1	3	261
EMPLOYEE WAS DUMPING STD MTL CONT AND HE WAS STRUCK BY WASTE HANDLED BY COWORKER RESULTING IN ABRASIONS TO EYES.	1	2	158
EMPLOYEE WAS DUMPING STD MTL CONT AND HE OVEREXERTED SELF WITH STD MTL CONT WHICH WAS UNUSUALLY HEAVY RESULTING IN SPRAIN OR STRAIN TO HAND.	1	38	1770
EMPLOYEE WAS DUMPING STD MTL CONT AND HE MADE SUDDEN MOVEMENT IN CATCHING STD MTL CONT WHICH WAS EMPTY AND HAD SLIPPED FROM HIS HANDS RESULTING IN SPRAIN OR STRAIN TO SHOULDER.	1	48	1604
EMPLOYEE WAS DUMPING STD MTL CONT AND HE FELL FROM SLIPPERY STEP OF VEH ONTO PAVEMENT RESULTING IN SPRAIN OR STRAIN TO BACK.	1	59	1600
EMPLOYEE WAS DUMPING STD MTL CONT AND HE FELL FROM STEP OF VEH ONTO PAVEMENT RESULTING IN BRUISE TO ELBOW.	1	0	108
EMPLOYEE WAS DUMPING NSTD MTL CONT AND HE WAS CAUGHT BETWEEN CONT & EDGE OF HOPPER RESULTING IN SPRAIN OR STRAIN TO THUMB.	1	0	44
EMPLOYEE WAS DUMPING STD MTL CONT AND HE WAS CAUGHT BETWEEN CONT & EDGE OF HOPPER RESULTING IN BRUISE TO HAND.	2	17	598
EMPLOYEE WAS DUMPING STD MTL CONT AND HE WAS INJURED IN OTHER TYPE OF ACCIDENT RESULTING IN ELECTRIC SHOCK TO LEG.	1	0	24
EMPLOYEE WAS DUMPING STD MTL CONT AND HE WAS STRUCK BY PIECE OF METAL WHICH FELL OUT OF TOP OF CONT RESULTING IN CUT/PUNCTURE TO FINGERS.	1	0	23
EMPLOYEE WAS DUMPING STD MTL CONT AND HE WAS STRUCK BY CONT HANDLED BY COWORKER WHICH WAS FULL RESULTING IN CUT/PUNCTURE TO FINGERS.	1	2	67
EMPLOYEE WAS DUMPING STD MTL CONT AND HE STRUCK AGAINST SIDE OF VEH RESULTING IN BRUISE TO HAND.	1	0	42
EMPLOYEE WAS DUMPING STD MTL CONT AND HE GOT AIRBORNE PARTICLES IN EYE RESULTING IN ABRASIONS TO EYES.	3	6	264
EMPLOYEE WAS DUMPING STD MTL CONT AND HE WAS STRUCK BY GLASS WHICH FELL OUT OF TOP OF CONT RESULTING IN EYE IRRITATION TO EYES.	1	0	20
EMPLOYEE WAS DUMPING LITTER CAN AND HE WAS CAUGHT BETWEEN CONT & EDGE OF HOPPER (CONT WAS UNUSUALLY HVY) RESULTING IN BRUISE TO HAND.	1	5	177
EMPLOYEE WAS DUMPING STD MTL CONT AND HE WAS STRUCK BY COWORKER (UNINTENTIONALLY) RESULTING IN BRUISE TO CHEST.	1	2	06
EMPLOYEE WAS DUMPING STD MTL CONT AND HE MADE SUDDEN MOVEMENT IN CATCHING STD MTL CONT WHICH WAS UNUSUALLY HEAVY AND HAD SLIPPED FROM HIS HANDS RESULTING IN SPRAIN OR STRAIN TO ARM.	1	0	27

PROFILE	NO. INJ	DAYS	COSTS
EMPLOYEE WAS DUMPING STD MTL CONT AND HE WAS HURT BY HANDLING STD MTL CONT WHICH HAD PROTRUDING WASTE RESULTING IN CUT/PUNCTURE TO WRIST.	1	6	147
EMPLOYEE WAS DUMPING STD MTL CONT AND HE STRUCK AGAINST SIDE OF VEH RESULTING IN ABRASIONS TO KNEE.	1	0	20
EMPLOYEE WAS DUMPING STD MTL CONT AND HE STRUCK AGAINST CONT HANDLED BY COWORKER WHICH WAS FULL RESULTING IN SPRAIN OR STRAIN TO WRIST.	1	9	548
EMPLOYEE WAS DUMPING STD MTL CONT AND HE WAS STRUCK BY ROCKS/CONCRETE/DIRT WHICH FELL OUT OF TOP OF CONT RESULTING IN CUT/PUNCTURE TO FINGERS.	1	1	139
EMPLOYEE WAS DUMPING OIL DRUM AND HE OVEREXERTED SELF WITH OIL DRUM WHICH WAS UNUSUALLY HEAVY AND HNDLD WITH COWRKR RESULTING IN SPRAIN OR STRAIN TO BACK.	1	0	86
EMPLOYEE WAS DUMPING PLASTIC BAG AND HE WAS STRUCK BY PLASTIC BAG WHICH HAD PROTRUDING WASTE AND HAD SLIPPED FROM HIS HANDS RESULTING IN CUT/PUNCTURE TO HAND.	1	0	18
EMPLOYEE WAS DUMPING BULK CONT (1-10 YD) AND HE WAS STRUCK BY PARTICLES IN WASTE WHICH WAS EJTD FROM HOPPER RESULTING IN EYE IRRITATION TO EYES.	1	1	16
EMPLOYEE WAS DUMPING STD MTL CONT AND HE WAS CAUGHT BETWEEN CONT & VEH (CONT WT SHIFTED) RESULTING IN BRUISE TO THUMB.	1	2	145
EMPLOYEE WAS DUMPING LITTER CAN AND HE WAS CAUGHT BETWEEN CONT & EDGE OF HOPPER (CONT WAS UNUSUALLY HVY) RESULTING IN FRACTURE TO FINGERS.	1	1	108
EMPLOYEE WAS DUMPING BULK CONT (1-10 YD) AND HE WAS STRUCK BY CABLE RESULTING IN BRUISE TO CHEST.	2	11	439
EMPLOYEE WAS DUMPING STD MTL CONT AND HE CONTACTED CAUSTIC OR TOXIC CHEMICAL RESULTING IN EYE IRRITATION TO EYES.	1	0	7
EMPLOYEE WAS DUMPING BULK CONT (1-10 YD) AND HE MADE SUDDEN MOVEMENT IN CATCHING BULK CONT(1-10 YD) WHICH WAS UNUSUALLY HEAVY AND UNUSUALLY LG RESULTING IN SPRAIN OR STRAIN TO HAND.	1	8	408
EMPLOYEE WAS DUMPING STD MTL CONT AND HE WAS STRUCK BY GLASS WHICH FELL OUT OF TOP OF CONT RESULTING IN CUT/PUNCTURE TO EYES.	1	0	41
EMPLOYEE WAS DUMPING STD MTL CONT AND HE WAS STRUCK BY WOOD RESULTING IN CUT/PUNCTURE TO MOUTH.	1	2	111
EMPLOYEE WAS DUMPING PLASTIC BAG AND HE WAS STRUCK BY CHEMICAL WHICH FELL OUT OF VEH RESULTING IN ABRASIONS TO EYES.	1	0	36
EMPLOYEE WAS DUMPING STD MTL CONT AND HE WAS CAUGHT BETWEEN CONT & EDGE OF HOPPER RESULTING IN BRUISE TO ELBOW.	1	15	277
EMPLOYEE WAS DUMPING PLASTIC BAG AND HE WAS HURT BY HANDLING PLASTIC BAG WHICH HAD PROTRUDING GLASS RESULTING IN CUT/PUNCTURE TO ARM.	1	0	38
EMPLOYEE WAS DUMPING STD MTL CONT AND HE WAS STRUCK BY GLASS WHICH FELL OUT OF VEH RESULTING IN CUT/PUNCTURE TO ARM.	1	5	151
EMPLOYEE WAS DUMPING STD MTL CONT AND HE WAS CAUGHT BETWEEN CONT & EDGE OF HOPPER RESULTING IN BRUISE TO THUMB.	1	2	96
EMPLOYEE WAS DUMPING STD MTL CONT AND HE WAS STRUCK BY WOOD RESULTING IN BRUISE TO HAND.	1	8	297
EMPLOYEE WAS DUMPING STD MTL CONT AND HE WAS STRUCK BY VEH RESULTING IN CUT/PUNCTURE TO ELBOW.	1	2	147
EMPLOYEE WAS DUMPING STD MTL CONT AND HE MADE SUDDEN MOVEMENT IN CATCHING STD MTL CONT WHICH WAS FULL RESULTING IN SPRAIN OR STRAIN TO WRIST.	1	5	300
EMPLOYEE WAS DUMPING STD MTL CONT AND HE STRUCK SELF WITH STD MTL CONT WHICH WAS FULL AND HAD BOUNCED BK FM HOPPER RESULTING IN BRUISE TO GROIN.	1	0	27
EMPLOYEE WAS DUMPING STD MTL CONT AND HE WAS STRUCK BY GLASS WHICH BROKE AGAINST THE VEH RESULTING IN CUT/PUNCTURE TO EYES.	1	0	22
EMPLOYEE WAS DUMPING PLASTIC BAG AND HE WAS STRUCK BY CERAMIC WASTE WHICH FELL OUT OF VEH RESULTING IN CUT/PUNCTURE TO ARM.	1	1	108
EMPLOYEE WAS DUMPING WHEELED CART AND HE OVEREXERTED SELF WITH WHEELED CART WHICH WAS FULL RESULTING IN SPRAIN OR STRAIN TO ELBOW.	1	0	20
EMPLOYEE WAS DUMPING STD MTL CONT AND HE WAS CAUGHT BETWEEN CONT & EDGE OF HOPPER (CONT WAS UNUSUALLY HVY) RESULTING IN BRUISE TO FINGERS.	1	0	12
EMPLOYEE WAS DUMPING STD MTL CONT AND HE 3 STD MTL CONT WHICH HAD A PROTRUDING HYPODERMIC NEEDLE RESULTING IN CUT/PUNCTURE TO ARM.			

PROFILE	NO. INJ	DAYS	COSTS
EMPLOYEE WAS DUMPING PLASTIC BAG AND HE WAS STRUCK BY BOTTLE WHICH WAS EJTD FROM HOPPER RESULTING IN CUT/PUNCTURE TO FOREHEAD.	1	4	372
EMPLOYEE WAS DUMPING WHEELED CART AND HE OVEREXERTED SELF WITH WHEELED CART WHICH WAS FULL RESULTING IN SPRAIN OR STRAIN TO SHOULDER.	1	11	574
EMPLOYEE WAS DUMPING TOTE BARREL AND HE WAS STRUCK BY UNKNOWN WASTE WHICH FELL OUT OF TOP OF CONT RESULTING IN CUT/PUNCTURE TO ABDOMEN.	1	0	0
EMPLOYEE WAS DUMPING STD MTL CONT AND HE WAS STRUCK BY VEH RESULTING IN BRUISE TO MULTIPLE BODY PARTS.	1	37	631
EMPLOYEE WAS DUMPING STD MTL CONT AND HE STRUCK SELF WITH STD MTL CONT WHICH WAS FULL AND HAD SHARP EDGES RESULTING IN CUT/PUNCTURE TO ARM.	1	0	20
EMPLOYEE WAS DUMPING PLASTIC BAG AND HE OVEREXERTED SELF WITH PLASTIC BAG WHICH WAS FULL RESULTING IN SPRAIN OR STRAIN TO SHOULDER.	1	10	662
EMPLOYEE WAS DUMPING STD MTL CONT AND HE WAS STRUCK BY BOTTLE WHICH FELL OUT OF TOP OF CONT RESULTING IN CUT/PUNCTURE TO WRIST.	1	0	53
EMPLOYEE WAS DUMPING PLASTIC BAG AND HE WAS HURT BY HANDLING PLASTIC BAG WHICH HAD PROTRUDING GLASS AND HAD SLIPPED FROM HIS HANDS RESULTING IN CUT/PUNCTURE TO ARM.	1	0	55
EMPLOYEE WAS DUMPING WHEELED CART AND HE SLIPPED STEPPING ON WET GROUND RESULTING IN HERNIA TO ABDOMEN.	1	46	1843
EMPLOYEE WAS DUMPING TOTE BARREL AND HE OVEREXERTED SELF WITH TOTE BARREL WHICH WAS UNUSUALLY HEAVY AND UNUSUALLY LG RESULTING IN SPRAIN OR STRAIN TO BACK.	1	10	100
EMPLOYEE WAS DUMPING TOTE BARREL AND HE WAS CAUGHT BETWEEN CONT & EDGE OF HOPPER (CONT WAS HVY-WATER FILLED) RESULTING IN BRUISE TO THUMB.	1	2	154
EMPLOYEE WAS DUMPING BULK CONT (1-10 YD) AND HE WAS CAUGHT BETWEEN BULK CONT & EDGE OF HOPPER WHICH WAS UNUSUALLY HEAVY RESULTING IN BRUISE TO FINGERS.	1	2	16
EMPLOYEE WAS DUMPING STD MTL CONT AND HE WAS STRUCK BY STD MTL CONT WHICH WAS FULL AND HAD BOUNCED BK FM HOPPER RESULTING IN SPRAIN OR STRAIN TO WRIST.	1	6	273
EMPLOYEE WAS DUMPING PLASTIC BAG AND HE FELL FROM STEP OF VEH ONTO PAVEMENT RESULTING IN SPRAIN OR STRAIN TO ANKLE.	1	5	255
EMPLOYEE WAS DUMPING OIL DRUM AND HE OVEREXERTED SELF WITH OIL DRUM WHICH WAS HVY (WATER FILLED) AND UNUSUALLY LG RESULTING IN SPRAIN OR STRAIN TO BACK.	1	9	638
EMPLOYEE WAS DUMPING STD MTL CONT AND HE WAS STRUCK BY CONT HANDLED BY COWORKER WHICH HAD PROTRUDING GLASS RESULTING IN CUT/PUNCTURE TO ARM.	1	0	46
EMPLOYEE WAS DUMPING STD MTL CONT AND HE WAS STRUCK BY TAILGATE RESULTING IN HERNIA TO ABDOMEN.	1	0	15
EMPLOYEE WAS DUMPING STD MTL CONT AND HE WAS STRUCK BY ACID WHICH FELL OUT OF TOP OF CONT RESULTING IN CHEMICAL BURN TO ABDOMEN.	1	5	256
EMPLOYEE WAS DUMPING TOTE BARREL AND HE WAS STRUCK BY GLASS WHICH WAS EJTD FROM HOPPER RESULTING IN CUT/PUNCTURE TO NOSE.	1	0	45
EMPLOYEE WAS DUMPING STD MTL CONT AND HE WAS CAUGHT BETWEEN CONT & VEH RESULTING IN BRUISE TO FINGERS.	1	0	00
EMPLOYEE WAS DUMPING PLASTIC BAG AND HE WAS STRUCK BY GLASS WHICH FELL OUT OF BOTTOM OF CONT RESULTING IN CUT/PUNCTURE TO ANKLE.	1	22	749
EMPLOYEE WAS DUMPING TOTE BARREL AND HE WAS CAUGHT BETWEEN CONT & EDGE OF HOPPER (CONT WAS UNUSUALLY HVY) RESULTING IN FRACTURE TO FINGERS.	1	19	700
EMPLOYEE WAS DUMPING STD MTL CONT AND HE SLIPPED WHILE ON WET PAVEMENT AND STRK AGNST EDGE OF HOPPER RESULTING IN BRUISE TO WRIST.	1	0	51
EMPLOYEE WAS DUMPING PLASTIC BAG AND HE WAS STRUCK BY PARTICLES IN WASTE WHICH WAS EJTD FROM HOPPER RESULTING IN EYE IRRITATION TO EYES.	1	0	09
EMPLOYEE WAS DUMPING STD MTL CONT AND HE OVEREXERTED SELF WITH STD MTL CONT WHICH WAS FULL RESULTING IN SPRAIN OR STRAIN TO FINGERS.	1	3	156
EMPLOYEE WAS DUMPING STD MTL CONT AND HE WAS HURT BY HANDLING STD MTL CONT WHICH WAS FULL AND HAD SHARP EDGES RESULTING IN CUT/PUNCTURE TO WRIST.	1	0	23
EMPLOYEE WAS DUMPING TOTE BARREL AND HE STRUCK AGAINST EDGE OF HOPPER RESULTING IN BRUISE TO WRIST.	1	15	697

PROFILE	NO. INJ	DAYS	COSTS
EMPLOYEE WAS DUMPING STD MTL CONT AND HE WAS CAUGHT BETWEEN CONT & EDGE OF HOPPER (CONT WAS UNUSUALLY HVY) RESULTING IN FRACTURE TO THUMB.	1	13	660
EMPLOYEE WAS DUMPING STD MTL CONT AND HE WAS CAUGHT BETWEEN CONT & EDGE OF HOPPER RESULTING IN FRACTURE TO FINGERS.	1	12	374
EMPLOYEE WAS DUMPING STD MTL CONT AND HE WAS STRUCK BY OTHER WASTE WHICH FELL OUT OF TOP OF CONT RESULTING IN CHEMICAL BURN TO EYES.	1	0	53
EMPLOYEE WAS DUMPING UNBUNDLED SHRUBBERY AND HE WAS STRUCK BY UNBUNDLED SHRUBBERY WHICH FELL OUT OF VEH RESULTING IN ABRASIONS TO EYES.	1	0	18
EMPLOYEE WAS DUMPING STD MTL CONT AND HE MADE SUDDEN MOVEMENT RESULTING IN SPRAIN OR STRAIN TO SHOULDER.	1	9	449
EMPLOYEE WAS DUMPING STD MTL CONT AND HE MADE SUDDEN MOVEMENT IN CATCHING STD MTL CONT WHICH WAS UNUSUALLY HEAVY AND HAD SLIPPED FROM HIS HANDS RESULTING IN SPRAIN OR STRAIN TO HAND.	1	10	169
EMPLOYEE WAS DUMPING STD MTL CONT AND HE WAS STRUCK BY UNBUNDLED SHRUBBERY WHICH FELL OUT OF VEH RESULTING IN ABRASIONS TO EYES.	1	1	46
EMPLOYEE WAS DUMPING UNK CONT TYPE AND HE FELL ON WET PAVEMENT RESULTING IN UNKNOWN TYPE OF INJURY TO HIPS.	1	5	420
EMPLOYEE WAS DUMPING PLASTIC CAN AND HE OVEREXERTED SELF WITH PLASTIC CAN WHICH WAS UNUSUALLY HEAVY RESULTING IN SPRAIN OR STRAIN TO BACK.	1	0	20
EMPLOYEE WAS DUMPING STD MTL CONT AND HE WAS CAUGHT BETWEEN CONT & EDGE OF HOPPER (CONT WAS FALLING) RESULTING IN BRUISE TO FINGERS.	1	17	989
EMPLOYEE WAS DUMPING STD MTL CONT AND HE OVEREXERTED SELF WITH STD MTL CONT WHICH WAS FULL RESULTING IN DISLOCATION TO SHOULDER.	1	145	3603
EMPLOYEE WAS DUMPING CARDBD BARREL AND HE WAS STRUCK BY BOTTLE WHICH WAS EJTD FROM HOPPER RESULTING IN CUT/PUNCTURE TO EARS.	1	0	41
EMPLOYEE WAS DUMPING STD MTL CONT AND HE WAS STRUCK BY PARTICLES IN WASTE WHICH WAS EJTD FROM HOPPER RESULTING IN CUT/PUNCTURE TO EYES.	1	0	80
EMPLOYEE WAS DUMPING TOTE BARREL AND HE WAS STRUCK BY PARTICLES IN WASTE WHICH WAS EJTD FROM HOPPER RESULTING IN EYE IRRITATION TO EYES.	1	0	15
EMPLOYEE WAS DUMPING STD MTL CONT AND HE SLIPPED WHILE ON PAVEMENT AND STRK AGNST EDGE OF HOPPER RESULTING IN BRUISE TO CHEST.	1	20	979
EMPLOYEE WAS DUMPING PLASTIC BAG AND HE WAS STRUCK BY CHEMICAL WHICH FELL OUT OF TOP OF CONT RESULTING IN EYE IRRITATION TO EYES.	1	0	50
EMPLOYEE WAS DUMPING BULK CONT (1-10 YD) AND HE GOT WASTE PARTICLES IN EYE RESULTING IN INFECTION TO EYES.	1	0	39
EMPLOYEE WAS DUMPING STD MTL CONT AND HE MADE SUDDEN MOVEMENT IN CATCHING STD MTL CONT WHICH WAS HVY (YARD CLIPPINGS) AND SLIPPERY (WET) RESULTING IN SPRAIN OR STRAIN TO WRIST.	1	1	87
EMPLOYEE WAS DUMPING TOTE BARREL AND HE STRUCK AGAINST BACK OF VEH RESULTING IN SPRAIN OR STRAIN TO HAND.	1	0	38
EMPLOYEE WAS DUMPING STD MTL CONT AND HE STRUCK AGAINST BACK OF VEH RESULTING IN SPRAIN OR STRAIN TO THUMB.	2	0	124
EMPLOYEE WAS DUMPING STD MTL CONT AND HE MADE SUDDEN MOVEMENT IN AVOIDING STD MTL CONT WHICH WAS FULL AND SLIPPERY (WET) RESULTING IN SPRAIN OR STRAIN TO BACK.	1	0	176
EMPLOYEE WAS DUMPING TOTE BARREL AND HE OVEREXERTED SELF WITH TOTE BARREL WHICH WAS FULL RESULTING IN UNKNOWN TYPE OF INJURY TO SHOULDER.	1	2	93
EMPLOYEE WAS DUMPING TOTE BARREL AND HE GOT WASTE PARTICLES IN EYE RESULTING IN EYE IRRITATION TO EYES.	1	0	29
EMPLOYEE WAS DUMPING STD MTL CONT AND HE WAS STRUCK BY CHEMICAL WHICH WAS EJTD FROM HOPPER RESULTING IN CHEMICAL BURN TO EYES.	1	0	115
EMPLOYEE WAS DUMPING PLASTIC BAG AND HE STRUCK SELF WITH PLASTIC BAG WHICH HAD PROTRUDING GLASS RESULTING IN CUT/PUNCTURE TO LEG.	1	0	28

PROFILE	NO. INJ	DAYS	COSTS
EMPLOYEE WAS DUMPING BULK CONT (1-10 YD) AND HE GOT WASTE PARTICLES IN EYE RESULTING IN EYE IRRITATION TO EYES.	1	0	15
EMPLOYEE WAS DUMPING TOTE BARREL AND HE WAS STRUCK BY CHEMICAL WHICH FELL OUT OF TOP OF CONT RESULTING IN EYE IRRITATION TO EYES.	1	8	469
EMPLOYEE WAS DUMPING STD MTL CONT AND HE WAS STRUCK BY VEH RESULTING IN BRUISE TO FOOT.	1	74	3821
EMPLOYEE WAS DUMPING STD MTL CONT AND HE WAS STRUCK BY GLASS WHICH FELL OUT OF TOP OF CONT RESULTING IN CUT/PUNCTURE TO WRIST.	1	8	253
EMPLOYEE WAS DUMPING STD MTL CONT AND HE WAS INJURED IN UNK ACCIDENT RESULTING IN BRUISE TO EARS.	1	0	20
EMPLOYEE WAS DUMPING WHEELED CART AND HE WAS STRUCK BY GLASS WHICH WAS EJTD FROM HOPPER RESULTING IN CUT/PUNCTURE TO EARS.	1	0	16
EMPLOYEE WAS DUMPING CARDBD BARREL AND HE GOT WASTE PARTICLES IN EYE RESULTING IN EYE IRRITATION TO EYES.	1	0	85
EMPLOYEE WAS DUMPING CARDBD BARREL AND HE MADE SUDDEN MOVEMENT RESULTING IN SPRAIN OR STRAIN TO NECK.	1	0	26
EMPLOYEE WAS DUMPING STD MTL CONT AND HE WAS INJURED FROM AGGRESSIVE ACT RESULTING IN BRUISE TO SKULL.	1	0	16
EMPLOYEE WAS DUMPING OIL DRUM AND HE OVEREXERTED SELF WITH OIL DRUM WHICH WAS FULL RESULTING IN SPRAIN OR STRAIN TO SHOULDER.	1	0	100
EMPLOYEE WAS DUMPING NSTD MTL CONT AND HE OVEREXERTED SELF WITH NSTD MTL CONT WHICH WAS UNUSUALLY HEAVY RESULTING IN SPRAIN OR STRAIN TO BACK.	1	15	768
EMPLOYEE WAS DUMPING WHEELED CART AND HE STRUCK AGAINST STEP OF VEH RESULTING IN BRUISE TO KNEE.	1	0	16
EMPLOYEE WAS DUMPING STD MTL CONT AND HE SLIPPED STEPPING ON WET PAVEMENT RESULTING IN SPRAIN OR STRAIN TO BACK.	1	12	903
EMPLOYEE WAS DUMPING STD MTL CONT AND HE OVEREXERTED SELF WITH STD MTL CONT WHICH WAS UNUSUALLY HEAVY RESULTING IN SPRAIN OR STRAIN TO ARM.	2	23	956
EMPLOYEE WAS DUMPING STD MTL CONT AND HE STRUCK SELF WITH STD MTL CONT WHICH WAS UNUSUALLY HEAVY AND HAD SLIPPED FROM HIS HANDS RESULTING IN BRUISE TO FOOT.	1	6	219
EMPLOYEE WAS DUMPING CARDBD BOX AND HE WAS CAUGHT IN PACKER BLADE RESULTING IN FRACTURE TO WRIST.	1	93	1630
EMPLOYEE WAS DUMPING STD MTL CONT AND HE WAS STRUCK BY GLASS WHICH FELL OUT OF TOP OF CONT RESULTING IN CUT/PUNCTURE TO ARM.	1	2	183
EMPLOYEE WAS DUMPING NSTD MTL CONT AND HE GOT WASTE PARTICLES IN EYE RESULTING IN INFECTION TO EYES.	1	9	351
EMPLOYEE WAS DUMPING STD MTL CONT AND HE SLIPPED WHILE ON WET RUNNING BOARD AND STRK AGNST SIDE OF HOPPER RESULTING IN BRUISE TO WRIST.	1	1	162
EMPLOYEE WAS DUMPING STD MTL CONT AND HE STRUCK SELF WITH STD MTL CONT WHICH HAD PROTRUDING SHRUBBERY RESULTING IN EYE IRRITATION TO EYES.	1	0	20
EMPLOYEE WAS DUMPING PLASTIC BAG AND HE FELL ON WET PAVEMENT RESULTING IN BRUISE TO KNEE.	1	6	215
EMPLOYEE WAS DUMPING BULK CONT (1-10 YD) AND HE SLIPPED WHILE ON OBJ ON GROUND AND STRK AGNST BACK OF VEH RESULTING IN BRUISE TO HAND.	1	0	16
EMPLOYEE WAS DUMPING TOTE BARREL AND HE WAS CAUGHT BETWEEN CONT & EDGE OF HOPPER (CONT HAD BOUNCED BK FM HOPPER) RESULTING IN SPRAIN OR STRAIN TO FINGERS.	1	0	25
EMPLOYEE WAS DUMPING STD MTL CONT AND HE WAS HURT BY HANDLING STD MTL CONT WHICH WAS FULL AND THE HANDLE BROKE RESULTING IN SPRAIN OR STRAIN TO WRIST.	1	3	289
EMPLOYEE WAS DUMPING STD MTL CONT AND HE STRUCK SELF WITH STD MTL CONT WHICH WAS FULL AND HAD BOUNCED BK FM HOPPER RESULTING IN BRUISE TO CHEST.	1	0	17
EMPLOYEE WAS DUMPING BULK CONT (1-10 YD) AND HE WAS STRUCK BY BULK CONT(1-10 YD) RESULTING IN SPRAIN OR STRAIN TO KNEE.	1	2	144
EMPLOYEE WAS DUMPING STD MTL CONT AND HE STRUCK SELF WITH STD MTL CONT WHICH WAS UNUSUALLY HEAVY AND HAD SLIPPED FROM HIS HANDS RESULTING IN FRACTURE TO TOES.	1	1	108
EMPLOYEE WAS DUMPING STD MTL CONT AND HE WAS STRUCK BY GLASS WHICH WAS EJTD FROM HOPPER RESULTING IN EYE IRRITATION TO EYES.	2	1	128
EMPLOYEE WAS DUMPING STD MTL CONT AND HE SLIPPED WHILE ON PAVEMENT AND STRK AGNST BLADE OF VEH RESULTING IN CUT/PUNCTURE TO HAND.	1	25	838

PROFILE	NO. INJ	DAYS	COSTS
EMPLOYEE WAS DUMPING BULK CONT (1-10 YD) AND HE MADE SUDDEN MOVEMENT IN CATCHING BULK CONT(1-10 YD) WHICH WAS FULL RESULTING IN SPRAIN OR STRAIN TO BACK.	1	12	740
EMPLOYEE WAS DUMPING STD MTL CONT AND HE WAS CAUGHT BETWEEN CONT & EDGE OF HOPPER RESULTING IN INFECTION TO FINGERS.	1	0	43
EMPLOYEE WAS DUMPING STD MTL CONT AND HE FELL ON GROUND RESULTING IN SPRAIN OR STRAIN TO BACK.	1	2	196
EMPLOYEE WAS DUMPING WHEELED CART AND HE SLIPPED STEPPING ON ICY GROUND RESULTING IN UNKNOWN TYPE OF INJURY TO UNK BODY PART.	1	9	489
EMPLOYEE WAS DUMPING NSTD MTL CONT AND HE OVEREXERTED SELF WITH NSTD MTL CONT WHICH WAS FULL AND UNUSUALLY LG RESULTING IN SPRAIN OR STRAIN TO ABDOMEN.	1	15	2223
EMPLOYEE WAS DUMPING STD MTL CONT AND HE OVEREXERTED SELF WITH STD MTL CONT WHICH WAS HVY (ROCKS) RESULTING IN SPRAIN OR STRAIN TO SHOULDER.	1	1	63
EMPLOYEE WAS DUMPING STD MTL CONT AND HE SLIPPED WHILE ON ICY GROUND AND STRK AGNST BACK OF VEH RESULTING IN BRUISE TO SHOULDER.	1	0	20
EMPLOYEE WAS DUMPING STD MTL CONT AND HE SLIPPED WHILE ON PAVEMENT AND STRK AGNST BLADE OF VEH RESULTING IN CUT/PUNCTURE TO ARM.	1	77	3692
EMPLOYEE WAS DUMPING PLASTIC BAG AND HE OVEREXERTED SELF WITH PLASTIC BAG WHICH WAS UNUSUALLY HEAVY RESULTING IN SPRAIN OR STRAIN TO NECK.	1	2	100
EMPLOYEE WAS DUMPING STD MTL CONT AND HE WAS STRUCK BY BOTTLE WHICH WAS EJTD FROM HOPPER RESULTING IN FRACTURE TO NOSE.	1	3	284
EMPLOYEE WAS DUMPING PLASTIC CAN AND HE MADE SUDDEN MOVEMENT RESULTING IN SPRAIN OR STRAIN TO BACK.	1	1	144
EMPLOYEE WAS DUMPING STD MTL CONT AND HE WAS STRUCK BY UNKNOWN WASTE WHICH WAS EJTD FROM HOPPER RESULTING IN EYE IRRITATION TO EYES.	1	1	108
EMPLOYEE WAS DUMPING STD MTL CONT AND HE STRUCK SELF WITH STD MTL CONT WHICH WAS UNUSUALLY HEAVY RESULTING IN BRUISE TO LEG.	1	5	200
EMPLOYEE WAS DUMPING NSTD MTL CONT AND HE OVEREXERTED SELF WITH NSTD MTL CONT WHICH WAS FULL RESULTING IN SPRAIN OR STRAIN TO BACK.	1	4	220
EMPLOYEE WAS DUMPING STD MTL CONT AND HE STRUCK AGAINST POST RESULTING IN BRUISE TO MULTIPLE BODY PARTS.	1	6	346
EMPLOYEE WAS DUMPING TOTE BARREL AND HE STRUCK AGAINST TOTE BARREL RESULTING IN BRUISE TO ELBOW.	1	0	20
EMPLOYEE WAS DUMPING PLASTIC CAN AND HE STRUCK AGAINST EDGE OF HOPPER RESULTING IN BRUISE TO SHOULDER.	1	0	20
EMPLOYEE WAS DUMPING STD MTL CONT AND HE SLIPPED WHILE ON ICY GROUND AND STRK AGNST STEP OF VEH RESULTING IN BRUISE TO KNEE.	1	2	142
EMPLOYEE WAS DUMPING TOTE BARREL AND HE WAS STRUCK BY BLADE OF VEH RESULTING IN ABRASIONS TO HAND.	1	13	750
EMPLOYEE WAS DUMPING STD MTL CONT AND HE MADE SUDDEN MOVEMENT IN AVOIDING ANIMAL RESULTING IN SPRAIN OR STRAIN TO WRIST.	1	0	24
EMPLOYEE WAS DUMPING STD MTL CONT AND HE MADE SUDDEN MOVEMENT IN CATCHING STD MTL CONT WHICH WAS FULL AND HAD SLIPPED FROM HIS HANDS RESULTING IN SPRAIN OR STRAIN TO THUMB.	1	0	37
EMPLOYEE WAS DUMPING STD MTL CONT AND HE WAS INJURED WHEN VEH MADE SUDDEN START RESULTING IN SPRAIN OR STRAIN TO BACK.	1	2	118
EMPLOYEE WAS DUMPING BULK CONT (1-10 YD) AND HE WAS STRUCK BY BULK CONT(1-10 YD) RESULTING IN BRUISE TO HAND.	1	0	49
EMPLOYEE WAS DUMPING STD MTL CONT AND HE SLIPPED STEPPING ON DEPRESSION RESULTING IN SPRAIN OR STRAIN TO LEG.	1	0	16
EMPLOYEE WAS DUMPING STD MTL CONT AND HE WAS STRUCK BY UNKNOWN WASTE WHICH WAS EJTD FROM HOPPER RESULTING IN CUT/PUNCTURE TO EYES.	1	0	36
TOTAL	422	2651	117101

FIGURE 1-9

ALL USERS
DETAILED DESCRIPTION OF
LIFTING TO DUMP CONTAINER ACCIDENT S
OSHA RECORDABLE INJURIES ONLY

REPORTING PERIOD: DECEMBER 1975 - DECEMBER 1976

THIS PROFILE IS A FORMATTED SENTENCE CONSISTING OF ACTIVITY, ACCIDENT TYPE ,NATURE OF INJRURY AND PART OF BODY.

PROFILE	NO. INJ	DAYS	COSTS
EMPLOYEE WAS LIFTING TO DUMP STD MTL CONT AND HE MADE SUDDEN MOVEMENT IN CATCHING STD MTL CONT WHICH WAS UNUSUALLY HEAVY AND HAD SLIPPED FROM HIS HANDS RESULTING IN SPRAIN OR STRAIN TO THUMB.	1	17	417
EMPLOYEE WAS LIFTING TO DUMP TOTE BARREL AND HE OVEREXERTED SELF WITH TOTE BARREL WHICH WAS FULL RESULTING IN SPRAIN OR STRAIN TO BACK.	2	4	75
EMPLOYEE WAS LIFTING TO DUMP STD MTL CONT AND HE OVEREXERTED SELF WITH STD MTL CONT WHICH WAS UNUSUALLY HEAVY RESULTING IN SPRAIN OR STRAIN TO BACK.	28	340	14269
EMPLOYEE WAS LIFTING TO DUMP STD MTL CONT AND HE OVEREXERTED SELF WITH STD MTL CONT WHICH WAS FULL RESULTING IN SPRAIN OR STRAIN TO BACK.	25	229	10207
EMPLOYEE WAS LIFTING TO DUMP STD MTL CONT AND HE SLIPPED STEPPING ON ICY PAVEMENT RESULTING IN SPRAIN OR STRAIN TO BACK.	1	0	20
EMPLOYEE WAS LIFTING TO DUMP PLASTIC BAG AND HE STRUCK SELF WITH PLASTIC BAG WHICH HAD PROTRUDING GLASS RESULTING IN CUT/PUNCTURE TO LEG.	24	75	4256
EMPLOYEE WAS LIFTING TO DUMP STD MTL CONT AND HE SLIPPED STEPPING ON WET STAIRS RESULTING IN SPRAIN OR STRAIN TO ANKLE.	1	0	49
EMPLOYEE WAS LIFTING TO DUMP OTHER CONT TYPE AND HE OVEREXERTED SELF WITH OTHER CONT TYPE WHICH WAS UNUSUALLY HEAVY RESULTING IN SPRAIN OR STRAIN TO BACK.	1	12	509
EMPLOYEE WAS LIFTING TO DUMP TOTE BARREL AND HE OVEREXERTED SELF WITH TOTE BARREL WHICH WAS UNUSUALLY HEAVY AND STRK AGNST STEP OF VEH RESULTING IN SPRAIN OR STRAIN TO SHOULDER.	1	0	49
EMPLOYEE WAS LIFTING TO DUMP STD MTL CONT AND HE OVEREXERTED SELF WITH STD MTL CONT WHICH WAS FULL RESULTING IN SPRAIN OR STRAIN TO TRUNK.	2	18	361
EMPLOYEE WAS LIFTING TO DUMP PLASTIC CAN AND HE OVEREXERTED SELF WITH PLASTIC CAN WHICH WAS FULL AND HAD MISSING HANDLES RESULTING IN SPRAIN OR STRAIN TO SHOULDER.	1	0	46
EMPLOYEE WAS LIFTING TO DUMP STD MTL CONT AND HE CONTACTED CAUSTIC OR TOXIC EXHAUST FUMES RESULTING IN ASPHYXIATION OR DROWNING TO INTERNAL ORGANS.	1	4	120
EMPLOYEE WAS LIFTING TO DUMP STD MTL CONT AND HE MADE SUDDEN MOVEMENT IN CATCHING STD MTL CONT WHICH WAS UNUSUALLY HEAVY AND IN WHICH WEIGHT SHIFTED RESULTING IN SPRAIN OR STRAIN TO THUMB.	1	35	2698
EMPLOYEE WAS LIFTING TO DUMP STD MTL CONT AND HE OVEREXERTED SELF WITH STD MTL CONT WHICH WAS HVY (WATER FILLED) RESULTING IN SPRAIN OR STRAIN TO BACK.	2	8	692
EMPLOYEE WAS LIFTING TO DUMP CARDBD BOX AND HE MADE SUDDEN MOVEMENT IN CATCHING CARDBOARD BOX WHICH WAS HVY (WATER FILLED) AND HAD SLIPPED FROM HIS HANDS RESULTING IN SPRAIN OR STRAIN TO SHOULDER.	1	2	145
EMPLOYEE WAS LIFTING TO DUMP STD MTL CONT AND HE STRUCK SELF WITH STD MTL CONT WHICH WAS FULL AND HAD SLIPPED FROM HIS HANDS RESULTING IN BRUISE TO FOOT.	1	1	86
EMPLOYEE WAS LIFTING TO DUMP STD MTL CONT AND HE OVEREXERTED SELF WITH STD MTL CONT WHICH WAS FULL RESULTING IN SPRAIN OR STRAIN TO GROIN.	1	7	158
EMPLOYEE WAS LIFTING TO DUMP STD MTL CONT AND HE OVEREXERTED SELF WITH STD MTL CONT WHICH WAS FULL RESULTING IN SPRAIN OR STRAIN TO OTHER BODY PART.	1	14	156
EMPLOYEE WAS LIFTING TO DUMP STD MTL CONT AND HE OVEREXERTED SELF WITH STD MTL CONT WHICH WAS FULL RESULTING IN SPRAIN OR STRAIN TO SHOULDER.	6	68	2457
EMPLOYEE WAS LIFTING TO DUMP STD MTL CONT AND HE OVEREXERTED SELF WITH STD MTL CONT WHICH WAS UNUSUALLY HEAVY RESULTING IN SPRAIN OR STRAIN TO GROIN.	3	17	785
EMPLOYEE WAS LIFTING TO DUMP CARDBD BOX AND HE WAS HURT BY HANDLING CARDBOARD BOX WHICH HAD PROTRUDING GLASS RESULTING IN CUT/PUNCTURE TO WRIST.	1	6	243
EMPLOYEE WAS LIFTING TO DUMP CARDBD BARREL AND HE OVEREXERTED SELF WITH CARDBOARD BARREL WHICH WAS UNUSUALLY HEAVY RESULTING IN SPRAIN OR STRAIN TO ARM.	1	0	12

PROFILE	NO. INJ	DAYS	COSTS
EMPLOYEE WAS LIFTING TO DUMP STD MTL CONT AND HE OVEREXERTED SELF WITH STD MTL CONT WHICH WAS UNUSUALLY HEAVY RESULTING IN SPRAIN OR STRAIN TO ARM.	1	0	45
EMPLOYEE WAS LIFTING TO DUMP STD MTL CONT AND HE WAS STRUCK BY STD MTL CONT WHICH WAS FULL AND HAD BOUNCED BK FM HOPPER RESULTING IN BRUISE TO GROIN.	1	1	47
EMPLOYEE WAS LIFTING TO DUMP OIL DRUM AND HE OVEREXERTED SELF WITH OIL DRUM WHICH WAS UNUSUALLY HEAVY AND UNUSUALLY LG RESULTING IN SPRAIN OR STRAIN TO GROIN.	1	2	16
EMPLOYEE WAS LIFTING TO DUMP STD MTL CONT AND HE SLIPPED WHILE ON UNEVEN GROUND AND STRK AGNST STEP OF VEH RESULTING IN BRUISE TO LEG.	1	19	770
EMPLOYEE WAS LIFTING TO DUMP WHEELED CART AND HE OVEREXERTED SELF WITH WHEELED CART WHICH WAS UNUSUALLY HEAVY AND UNUSUALLY LG RESULTING IN SPRAIN OR STRAIN TO WRIST.	1	0	43
EMPLOYEE WAS LIFTING TO DUMP PLASTIC BAG AND HE WAS HURT BY HANDLING PLASTIC BAG WHICH HAD PROTRUDING GLASS RESULTING IN CUT/PUNCTURE TO THUMB.	2	0	43
EMPLOYEE WAS LIFTING TO DUMP STD MTL CONT AND HE SLIPPED STEPPING ON DEPRESSION RESULTING IN SPRAIN OR STRAIN TO ANKLE.	1	16	543
EMPLOYEE WAS LIFTING TO DUMP PLASTIC BAG AND HE STRUCK AGAINST SIDE OF VEH RESULTING IN BRUISE TO KNEE.	1	0	45
EMPLOYEE WAS LIFTING TO DUMP STD MTL CONT AND HE OVEREXERTED SELF WITH STD MTL CONT WHICH WAS FULL RESULTING IN SPRAIN OR STRAIN TO HIPS.	1	0	20
EMPLOYEE WAS LIFTING TO DUMP STD MTL CONT AND HE WAS STRUCK BY CHEMICAL WHICH FELL OUT OF TOP OF CONT RESULTING IN CHEMICAL BURN TO HAND.	1	0	35
EMPLOYEE WAS LIFTING TO DUMP TOTE BARREL AND HE SLIPPED STEPPING ON PAVEMENT RESULTING IN SPRAIN OR STRAIN TO KNEE.	1	6	20
EMPLOYEE WAS LIFTING TO DUMP PLASTIC BAG AND HE WAS HURT BY HANDLING PLASTIC BAG WHICH HAD PROTRUDING GLASS RESULTING IN CUT/PUNCTURE TO FINGERS.	6	2	338
EMPLOYEE WAS LIFTING TO DUMP PLASTIC BAG AND HE STRUCK SELF WITH PLASTIC BAG WHICH HAD PROTRUDING WASTE RESULTING IN CUT/PUNCTURE TO LEG.	3	8	461
EMPLOYEE WAS LIFTING TO DUMP PLASTIC BAG AND HE STRUCK SELF WITH PLASTIC BAG WHICH HAD PROTRUDING GLASS RESULTING IN CUT/PUNCTURE TO ARM.	6	1	284
EMPLOYEE WAS LIFTING TO DUMP STD MTL CONT AND HE FELL WHILE ON WET RUNNING BOARD AND STRK AGNST STD MTL CONT RESULTING IN BRUISE TO KNEE.	1	0	55
EMPLOYEE WAS LIFTING TO DUMP STD MTL CONT AND HE OVEREXERTED SELF WITH STD MTL CONT WHICH WAS HVY (YARD CLIPPINGS) RESULTING IN SPRAIN OR STRAIN TO BACK.	2	0	83
EMPLOYEE WAS LIFTING TO DUMP STD MTL CONT AND HE WAS HURT BY HANDLING STD MTL CONT WHICH WAS FULL RESULTING IN CUT/PUNCTURE TO HAND.	1	0	64
EMPLOYEE WAS LIFTING TO DUMP PLASTIC BAG AND HE STRUCK SELF WITH PLASTIC BAG WHICH HAD A PROTRUDING HYPODERMIC NEEDLE RESULTING IN CUT/PUNCTURE TO ARM.	1	0	32
EMPLOYEE WAS LIFTING TO DUMP PLASTIC BAG AND HE OVEREXERTED SELF WITH PLASTIC BAG WHICH WAS HVY (YARD CLIPPINGS) RESULTING IN SPRAIN OR STRAIN TO ARM.	1	0	72
EMPLOYEE WAS LIFTING TO DUMP PLASTIC BAG AND HE OVEREXERTED SELF WITH PLASTIC BAG WHICH WAS HVY (YARD CLIPPINGS) RESULTING IN SPRAIN OR STRAIN TO SHOULDER.	1	2	334
EMPLOYEE WAS LIFTING TO DUMP STD MTL CONT AND HE STRUCK SELF WITH STD MTL CONT WHICH WAS FULL RESULTING IN CUT/PUNCTURE TO LEG.	1	12	458
EMPLOYEE WAS LIFTING TO DUMP STD MTL CONT AND HE OVEREXERTED SELF WITH STD MTL CONT WHICH WAS UNUSUALLY HEAVY AND BEING HNDLD W OTHER CONT RESULTING IN SPRAIN OR STRAIN TO BACK.	1	79	4190
EMPLOYEE WAS LIFTING TO DUMP STD MTL CONT AND HE OVEREXERTED SELF WITH STD MTL CONT WHICH WAS FULL RESULTING IN SPRAIN OR STRAIN TO HAND.	1	0	32
EMPLOYEE WAS LIFTING TO DUMP STD MTL CONT AND HE GOT WASTE PARTICLES IN EYE RESULTING IN EYE IRRITATION TO EYES.	6	2	240
EMPLOYEE WAS LIFTING TO DUMP STD MTL CONT AND HE STEPPED ON UNBUNDLED SHRUBBERY RESULTING IN SPRAIN OR STRAIN TO ANKLE.			

PROFILE	NO. INJ	DAYS	COSTS
EMPLOYEE WAS LIFTING TO DUMP PLASTIC BAG AND HE OVEREXERTED SELF WITH PLASTIC BAG WHICH WAS FULL IN STEPPING DOWN RESULTING IN SPRAIN OR STRAIN TO GROIN.	1	2	96
EMPLOYEE WAS LIFTING TO DUMP STD MTL CONT AND HE OVEREXERTED SELF WITH STD MTL CONT WHICH WAS FULL RESULTING IN SPRAIN OR STRAIN TO ABDOMEN.	1	0	24
EMPLOYEE WAS LIFTING TO DUMP STD MTL CONT AND HE OVEREXERTED SELF WITH STD MTL CONT WHICH WAS UNUSUALLY HEAVY RESULTING IN SPRAIN OR STRAIN TO HIPS.	2	2	148
EMPLOYEE WAS LIFTING TO DUMP PLASTIC BAG AND HE WAS HURT BY HANDLING PLASTIC BAG WHICH HAD PROTRUDING WASTE RESULTING IN CUT/PUNCTURE TO THUMB.	1	0	42
EMPLOYEE WAS LIFTING TO DUMP TOTE BARREL AND HE FELL ON GROUND RESULTING IN SPRAIN OR STRAIN TO KNEE.	1	26	1238
EMPLOYEE WAS LIFTING TO DUMP STD MTL CONT AND HE WAS CAUGHT BETWEEN CONT & EDGE OF HOPPER (CONT WAS UNUSUALLY HVY) RESULTING IN FRACTURE TO HAND.	2	36	955
EMPLOYEE WAS LIFTING TO DUMP STD MTL CONT AND HE STRUCK SELF WITH STD MTL CONT WHICH WAS FULL RESULTING IN BRUISE TO HAND.	1	1	57
EMPLOYEE WAS LIFTING TO DUMP CARDBD BOX AND HE OVEREXERTED SELF WITH CARDBOARD BOX WHICH WAS HVY (ROCKS) RESULTING IN SPRAIN OR STRAIN TO BACK.	1	29	1450
EMPLOYEE WAS LIFTING TO DUMP STD MTL CONT AND HE STRUCK AGAINST SIDE OF VEH RESULTING IN BRUISE TO HAND.	1	0	32
EMPLOYEE WAS LIFTING TO DUMP STD MTL CONT AND HE OVEREXERTED SELF WITH STD MTL CONT WHICH WAS FULL RESULTING IN SPRAIN OR STRAIN TO CHEST.	1	1	71
EMPLOYEE WAS LIFTING TO DUMP STD MTL CONT AND HE OVEREXERTED SELF WITH STD MTL CONT WHICH WAS UNUSUALLY HEAVY AND HNDLD WITH COWRKR RESULTING IN SPRAIN OR STRAIN TO NECK.	1	8	61
EMPLOYEE WAS LIFTING TO DUMP PLASTIC BAG AND HE OVEREXERTED SELF WITH PLASTIC BAG WHICH WAS FULL AND BEING HNDLD W OTHER CONT RESULTING IN SPRAIN OR STRAIN TO SHOULDER.	1	0	36
EMPLOYEE WAS LIFTING TO DUMP CARDBD BOX AND HE OVEREXERTED SELF WITH CARDBOARD BOX WHICH WAS FULL RESULTING IN SPRAIN OR STRAIN TO ABDOMEN.	1	0	27
EMPLOYEE WAS LIFTING TO DUMP STD MTL CONT AND HE WAS STRUCK BY BOTTLE WHICH WAS EJTD FROM HOPPER RESULTING IN CUT/PUNCTURE TO LEG.	1	0	52
EMPLOYEE WAS LIFTING TO DUMP PLASTIC BAG AND HE WAS STRUCK BY UNBUNDLED SHRUBBERY WHICH FELL OUT OF TOP OF CONT RESULTING IN CUT/PUNCTURE TO LEG.	1	0	12
EMPLOYEE WAS LIFTING TO DUMP PLASTIC BAG AND HE STRUCK SELF WITH PLASTIC BAG WHICH HAD A PROTRUDING HYPODERMIC NEEDLE RESULTING IN CUT/PUNCTURE TO LEG.	2	0	30
EMPLOYEE WAS LIFTING TO DUMP TOTE BARREL AND HE STRUCK AGAINST EDGE OF HOPPER RESULTING IN BRUISE TO KNEE.	1	5	82
EMPLOYEE WAS LIFTING TO DUMP STD MTL CONT AND HE OVEREXERTED SELF WITH STD MTL CONT WHICH WAS UNUSUALLY HEAVY RESULTING IN SPRAIN OR STRAIN TO SHOULDER.	6	59	1639
EMPLOYEE WAS LIFTING TO DUMP PLASTIC BAG AND HE WAS STRUCK BY GLASS WHICH WAS EJTD FROM HOPPER RESULTING IN CUT/PUNCTURE TO SHOULDER.	1	5	280
EMPLOYEE WAS LIFTING TO DUMP STD MTL CONT AND HE OVEREXERTED SELF WITH STD MTL CONT WHICH WAS FULL RESULTING IN SPRAIN OR STRAIN TO ARM.	1	1	125
EMPLOYEE WAS LIFTING TO DUMP STD MTL CONT AND HE STRUCK SELF WITH STD MTL CONT RESULTING IN BRUISE TO KNEE.	1	4	167
EMPLOYEE WAS LIFTING TO DUMP STD MTL CONT AND HE OVEREXERTED SELF WITH STD MTL CONT WHICH WAS UNUSUALLY HEAVY RESULTING IN SPRAIN OR STRAIN TO ABDOMEN.	2	28	1432
EMPLOYEE WAS LIFTING TO DUMP TOTE BARREL AND HE OVEREXERTED SELF WITH TOTE BARREL WHICH WAS UNUSUALLY HEAVY AND UNUSUALLY LG RESULTING IN SPRAIN OR STRAIN TO BACK.	1	6	159
EMPLOYEE WAS LIFTING TO DUMP OIL DRUM AND HE SLIPPED WHILE ON OILY PAVEMENT AND STRK AGNST OIL DRUM RESULTING IN SPRAIN OR STRAIN TO BACK.	1	59	2784

EMPLOYEE WAS LIFTING TO DUMP STD MTL CONT AND HE WAS CAUGHT BETWEEN CONT & VEH RESULTING IN FRACTURE TO FINGERS	11	26	1265
EMPLOYEE WAS LIFTING STD MTL CONT AND HE FELL WHILE ONSTEP OF VEH AND STRK AGNST STEP OF VEH RESULTING IN BRUISE TO KNEE.	1	0	50
EMPLOYEE WAS LIFTING TO DUMP PLASTIC BAG AND HE WAS STRUCK BY CONT HANDLED BY COWORKER RESULTING IN BRUISE TO LEG.	1	3	163
EMPLOYEE WAS LIFTING TO DUMP PLASTIC BAG AND HE WAS HURT BY HANDLING PLASTIC BAG WHICH HAD PROTRUDING GLASS RESULTING IN CUT/PUNCTURE TO HAND.	6	26	900
EMPLOYEE WAS LIFTING TO DUMP STD MTL CONT AND HE STRUCK AGAINST EDGE OF HOPPER RESULTING IN BRUISE TO HIPS.	1	0	74
EMPLOYEE WAS LIFTING TO DUMP STD MTL CONT AND HE MADE SUDDEN MOVEMENT IN AVOIDING ANIMAL RESULTING IN SPRAIN OR STRAIN TO BACK.	1	53	3834
EMPLOYEE WAS LIFTING TO DUMP OTHER CONT TYPE AND HE WAS STRUCK BY OTHER CONT TYPE WHICH WAS EMPTY AND HAD BOUNCED BK FM HOPPER RESULTING IN CUT/PUNCTURE TO ARM.	1	0	20
EMPLOYEE WAS LIFTING TO DUMP PLASTIC BAG AND HE WAS HURT BY HANDLING PLASTIC BAG WHICH HAD PROTRUDING GLASS RESULTING IN CUT/PUNCTURE TO ARM.	4	17	543
EMPLOYEE WAS LIFTING TO DUMP STD MTL CONT AND HE OVEREXERTED SELF WITH STD MTL CONT WHICH WAS HVY (WOOD) AND HNDLD WITH COWRKR RESULTING IN SPRAIN OR STRAIN TO BACK.	1	18	717
EMPLOYEE WAS LIFTING TO DUMP CARDBD BOX AND HE WAS STRUCK BY CARDBOARD BOX WHICH FELL OUT OF VEH RESULTING IN BRUISE TO THUMB.	1	1	63
EMPLOYEE WAS LIFTING TO DUMP STD MTL CONT AND HE WAS STRUCK BY SHARP OBJ WHICH WAS EJTD FROM HOPPER RESULTING IN CUT/PUNCTURE TO EYES.	1	1	65
EMPLOYEE WAS LIFTING TO DUMP NSTD MTL CONT AND HE OVEREXERTED SELF WITH NSTD MTL CONT WHICH WAS UNUSUALLY HEAVY RESULTING IN SPRAIN OR STRAIN TO BACK.	1	195	4512
EMPLOYEE WAS LIFTING TO DUMP STD MTL CONT AND HE STEPPED ON NAIL RESULTING IN CUT/PUNCTURE TO FOOT.	4	5	299
EMPLOYEE WAS LIFTING TO DUMP PLASTIC BAG AND HE FELL FROM RUNNING BOARD ONTO PAVEMENT RESULTING IN SPRAIN OR STRAIN TO BACK.	1	53	2910
EMPLOYEE WAS LIFTING TO DUMP STD MTL CONT AND HE OVEREXERTED SELF WITH STD MTL CONT WHICH WAS HVY (YARD CLIPPINGS) AND SLIPPERY (WET) RESULTING IN SPRAIN OR STRAIN TO GROIN.	1	8	133
EMPLOYEE WAS LIFTING TO DUMP UNK CONT TYPE AND HE WAS STRUCK BY UNKNOWN WASTE WHICH WAS EJTD FROM HOPPER RESULTING IN EYE IRRITATION TO EYES.	1	2	104
EMPLOYEE WAS LIFTING TO DUMP STD MTL CONT AND HE STRUCK AGAINST BACK OF VEH RESULTING IN BRUISE TO ELBOW.	2	2	151
EMPLOYEE WAS LIFTING TO DUMP CARDBD BOX AND HE MADE SUDDEN MOVEMENT IN CATCHING CARDBOARD BOX WHICH FELL OUT OF VEH RESULTING IN SPRAIN OR STRAIN TO BACK.	1	84	497
EMPLOYEE WAS LIFTING TO DUMP PLASTIC BAG AND HE STRUCK SELF WITH PLASTIC BAG WHICH HAD PROTRUDING GLASS RESULTING IN CUT/PUNCTURE TO KNEE.	2	13	672
EMPLOYEE WAS LIFTING TO DUMP STD MTL CONT AND HE FELL FROM STEP OF VEH ONTO PAVEMENT RESULTING IN BRUISE TO BACK.	1	0	5
EMPLOYEE WAS LIFTING TO DUMP PLASTIC BAG AND HE FELL FROM WET LOADING DOCK ONTO PAVEMENT RESULTING IN SPRAIN OR STRAIN TO MULTIPLE BODY PARTS.	1	88	4140
EMPLOYEE WAS LIFTING TO DUMP STD MTL CONT AND HE OVEREXERTED SELF WITH STD MTL CONT WHICH WAS UNUSUALLY HEAVY AND HNDLD WITH COWRKR RESULTING IN SPRAIN OR STRAIN TO ABDOMEN.	1	29	454
EMPLOYEE WAS LIFTING TO DUMP STD MTL CONT AND HE GOT WASTE PARTICLES IN EYE RESULTING IN ABRASIONS TO EYES.	1	14	866
EMPLOYEE WAS LIFTING TO DUMP CARDBD BOX AND HE MADE SUDDEN MOVEMENT IN CATCHING CARDBOARD BOX WHICH WAS FULL AND HAD SLIPPED FROM HIS HANDS RESULTING IN SPRAIN OR STRAIN TO BACK.	1	13	730
EMPLOYEE WAS LIFTING TO DUMP STD MTL CONT AND HE STRUCK SELF WITH STD MTL CONT WHICH WAS UNUSUALLY HEAVY AND SLIPPERY (WET) RESULTING IN BRUISE TO TOES.	1	26	679
EMPLOYEE WAS LIFTING TO DUMP PLASTIC BAG AND HE STRUCK SELF WITH PLASTIC BAG WHICH WAS UNUSUALLY HEAVY AND HAD PROTRUDING GLASS RESULTING IN CUT/PUNCTURE TO ANKLE.	1	11	225
EMPLOYEE WAS LIFTING TO DUMP STD MTL CONT AND HE WAS STRUCK BY STD MTL CONT WHICH WAS FULL RESULTING IN BRUISE TO LEG.	1	5	320
EMPLOYEE WAS LIFTING TO DUMP STD MTL CONT AND HE OVEREXERTED SELF WITH STD MTL CONT WHICH WAS HVY (WOOD) RESULTING IN SPRAIN OR STRAIN TO SHOULDER.			

PROFILE	NO. INJ	DAYS	COSTS
EMPLOYEE WAS LIFTING TO DUMP STD MTL CONT AND HE GOT AIRBORNE PARTICLES IN EYE RESULTING IN EYE IRRITATION TO EYES.	3	0	85
EMPLOYEE WAS LIFTING TO DUMP STD MTL CONT AND HE STRUCK AGAINST STEP OF VEH RESULTING IN DISLOCATION TO KNEE.	1	4	130
EMPLOYEE WAS LIFTING TO DUMP STD MTL CONT AND HE STRUCK SELF WITH CONTAINER LID RESULTING IN BRUISE TO FINGERS.	1	0	12
EMPLOYEE WAS LIFTING TO DUMP STD MTL CONT AND HE OVEREXERTED SELF WITH STD MTL CONT WHICH WAS HVY (ROCKS) RESULTING IN SPRAIN OR STRAIN TO BACK.	1	0	88
EMPLOYEE WAS LIFTING TO DUMP PLASTIC BAG AND HE WAS STRUCK BY GLASS WHICH WAS EJTD FROM HOPPER RESULTING IN CUT/PUNCTURE TO ARM.	1	22	676
EMPLOYEE WAS LIFTING TO DUMP STD MTL CONT AND HE OVEREXERTED SELF WITH STD MTL CONT WHICH WAS UNUSUALLY HEAVY RESULTING IN SPRAIN OR STRAIN TO HAND.	1	0	45
EMPLOYEE WAS LIFTING TO DUMP PLASTIC BAG AND HE WAS STRUCK BY ACID WHICH FELL OUT OF TOP OF CONT RESULTING IN CHEMICAL BURN TO MULTIPLE BODY PARTS.	1	0	36
EMPLOYEE WAS LIFTING TO DUMP PLASTIC BAG AND HE OVEREXERTED SELF WITH PLASTIC BAG WHICH WAS UNUSUALLY HEAVY AND BEING HNDLD W OTHER CONT RESULTING IN SPRAIN OR STRAIN TO SHOULDER.	1	3	153
EMPLOYEE WAS LIFTING TO DUMP PLASTIC BAG AND HE OVEREXERTED SELF WITH PLASTIC BAG WHICH WAS HVY (YARD CLIPPINGS) RESULTING IN SPRAIN OR STRAIN TO BACK.	1	54	858
EMPLOYEE WAS LIFTING TO DUMP CARDBD BOX AND HE FELL WHILE ON OILY GROUND AND STRK AGNST RUNNING BOARD RESULTING IN BRUISE TO ELBOW.	1	7	252
EMPLOYEE WAS LIFTING TO DUMP CARDBD BOX AND HE OVEREXERTED SELF WITH CARDBOARD BOX WHICH WAS FULL RESULTING IN SPRAIN OR STRAIN TO BACK.	2	26	1200
EMPLOYEE WAS LIFTING TO DUMP PLASTIC BAG AND HE STRUCK AGAINST BACK OF VEH RESULTING IN CUT/PUNCTURE TO ARM.	1	6	164
EMPLOYEE WAS LIFTING TO DUMP STD MTL CONT AND HE STRUCK SELF WITH STD MTL CONT WHICH WAS FULL AND HAD SHARP EDGES RESULTING IN CUT/PUNCTURE TO ABDOMEN.	1	0	30
EMPLOYEE WAS LIFTING TO DUMP PLASTIC BAG AND HE OVEREXERTED SELF WITH PLASTIC BAG WHICH WAS HVY (WOOD) RESULTING IN SPRAIN OR STRAIN TO NECK.	1	16	593
EMPLOYEE WAS LIFTING TO DUMP STD MTL CONT AND HE WAS STRUCK BY VEH RESULTING IN BRUISE TO CHEST.	1	0	10
EMPLOYEE WAS LIFTING TO DUMP PLASTIC BAG AND HE STRUCK SELF WITH PLASTIC BAG WHICH HAD PROTRUDING GLASS RESULTING IN CUT/PUNCTURE TO ANKLE.	1	8	374
EMPLOYEE WAS LIFTING TO DUMP STD MTL CONT AND HE STRUCK SELF WITH STD MTL CONT WHICH WAS FULL AND BEING HNDLD W OTHER CONT RESULTING IN FRACTURE TO FOOT.	1	29	1380
EMPLOYEE WAS LIFTING TO DUMP PLASTIC BAG AND HE FELL WHILE ON WET CURB AND STRK AGNST BACK OF VEH RESULTING IN BRUISE TO CHEST.	1	55	234
EMPLOYEE WAS LIFTING TO DUMP STD MTL CONT AND HE WAS STRUCK BY CHEMICAL WHICH WAS EJTD FROM HOPPER RESULTING IN CHEMICAL BURN TO MULTIPLE BODY PARTS.	1	2	155
EMPLOYEE WAS LIFTING TO DUMP CARDBD BOX AND HE OVEREXERTED SELF WITH CARDBOARD BOX WHICH WAS HVY (PAPER) RESULTING IN SPRAIN OR STRAIN TO BACK.	1	5	170
EMPLOYEE WAS LIFTING TO DUMP CARDBD BOX AND HE OVEREXERTED SELF WITH CARDBOARD BOX WHICH WAS UNUSUALLY HEAVY RESULTING IN SPRAIN OR STRAIN TO BACK.	1	13	100
EMPLOYEE WAS LIFTING TO DUMP WHEELED CART AND HE OVEREXERTED SELF WITH WHEELED CART WHICH WAS FULL RESULTING IN SPRAIN OR STRAIN TO BACK.	2	11	722
EMPLOYEE WAS LIFTING TO DUMP CARDBD BOX AND HE WAS HURT BY HANDLING CARDBOARD BOX WHICH HAD PROTRUDING GLASS RESULTING IN CUT/PUNCTURE TO ARM.	1	0	48
EMPLOYEE WAS LIFTING TO DUMP STD MTL CONT AND HE STRUCK AGAINST SIDE OF VEH RESULTING IN BRUISE TO FINGERS.	1	10	276
EMPLOYEE WAS LIFTING TO DUMP PLASTIC BAG AND HE WAS STRUCK BY CHEMICAL WHICH FELL OUT OF TOP OF CONT RESULTING IN DERMATITIS TO LEG.	1	2	69
EMPLOYEE WAS LIFTING TO DUMP STD MTL CONT AND HE STRUCK AGAINST BACK OF VEH RESULTING IN BRUISE TO ARM.	1	1	70

PROFILE	NO. INJ	DAYS	COSTS
EMPLOYEE WAS LIFTING TO DUMP STD MTL CONT AND HE STRUCK AGAINST HANDLE ON VEH RESULTING IN BRUISE TO ARM.	1	2	90
EMPLOYEE WAS LIFTING TO DUMP STD MTL CONT AND HE SLIPPED STEPPING ON PAVEMENT RESULTING IN SPRAIN OR STRAIN TO ANKLE.	1	1	108
EMPLOYEE WAS LIFTING TO DUMP PLASTIC BAG AND HE OVEREXERTED SELF WITH PLASTIC BAG WHICH WAS UNUSUALLY HEAVY RESULTING IN SPRAIN OR STRAIN TO BACK.	3	7	331
EMPLOYEE WAS LIFTING TO DUMP PLASTIC BAG AND HE STRUCK SELF WITH PLASTIC BAG WHICH HAD A PROTRUDING HYPODERMIC NEEDLE RESULTING IN CUT/PUNCTURE TO KNEE.	1	0	6
EMPLOYEE WAS LIFTING TO DUMP CARDBD BOX AND HE GOT WASTE PARTICLES IN EYE RESULTING IN EYE IRRITATION TO EYES.	1	0	18
EMPLOYEE WAS LIFTING TO DUMP STD MTL CONT AND HE WAS STRUCK BY ACID WHICH FELL OUT OF TOP OF CONT RESULTING IN CHEMICAL BURN TO EYES.	1	0	24
EMPLOYEE WAS LIFTING TO DUMP STD MTL CONT AND HE SLIPPED WHILE ON WET PAVEMENT AND STRK AGNST EDGE OF HOPPER RESULTING IN FRACTURE TO ELBOW.	1	2	80
EMPLOYEE WAS LIFTING TO DUMP STD MTL CONT AND HE STRUCK AGAINST EDGE OF HOPPER RESULTING IN INFLAMMATION OF THE JOINTS TO THUMB.	1	25	1154
EMPLOYEE WAS LIFTING TO DUMP STD MTL CONT AND HE SLIPPED WHILE ON STEP OF VEH AND STRK AGNST STD MTL CONT RESULTING IN BRUISE TO KNEE.	1	6	448
EMPLOYEE WAS LIFTING TO DUMP STD MTL CONT AND HE FELL WHILE ON PAVEMENT AND STRK AGNST STD MTL CONT RESULTING IN SPRAIN OR STRAIN TO BACK.	1	59	4937
EMPLOYEE WAS LIFTING TO DUMP PLASTIC BAG AND HE SLIPPED STEPPING ON WET PAVEMENT RESULTING IN SPRAIN OR STRAIN TO BACK.	1	14	494
EMPLOYEE WAS LIFTING TO DUMP STD MTL CONT AND HE STRUCK AGAINST EDGE OF HOPPER RESULTING IN BRUISE TO CHEST.	2	33	1589
EMPLOYEE WAS LIFTING TO DUMP PLASTIC BAG AND HE OVEREXERTED SELF WITH PLASTIC BAG WHICH WAS FULL RESULTING IN SPRAIN OR STRAIN TO BACK.	7	27	1475
EMPLOYEE WAS LIFTING TO DUMP STD MTL CONT AND HE WAS INJURED IN OTHER TYPE OF ACCIDENT RESULTING IN OTHER TYPE OF INJURY TO NOSE.	1	0	13
EMPLOYEE WAS LIFTING TO DUMP PLASTIC BAG AND HE OVEREXERTED SELF WITH PLASTIC BAG WHICH WAS HVY (ROCKS) RESULTING IN SPRAIN OR STRAIN TO BACK.	1	11	527
EMPLOYEE WAS LIFTING TO DUMP PLASTIC BAG AND HE STRUCK AGAINST EDGE OF HOPPER RESULTING IN FRACTURE TO WRIST.	1	17	750
EMPLOYEE WAS LIFTING TO DUMP STD MTL CONT AND HE OVEREXERTED SELF WITH STD MTL CONT WHICH WAS HVY (WOOD) RESULTING IN SPRAIN OR STRAIN TO BACK.	2	15	665
EMPLOYEE WAS LIFTING TO DUMP STD MTL CONT AND HE WAS STRUCK BY CONT HANDLED BY COWORKER RESULTING IN ABRASIONS TO SHOULDER.	1	1	65
EMPLOYEE WAS LIFTING TO DUMP STD MTL CONT AND HE WAS STRUCK BY CHEMICAL WHICH FELL OUT OF TOP OF CONT RESULTING IN CHEMICAL BURN TO LEG.	1	0	10
EMPLOYEE WAS LIFTING TO DUMP STD MTL CONT AND HE FELL ON PAVEMENT RESULTING IN BRUISE TO FOREHEAD.	1	0	37
EMPLOYEE WAS LIFTING TO DUMP STD MTL CONT AND HE OVEREXERTED SELF WITH STD MTL CONT WHICH WAS HVY (ROCKS) RESULTING IN SPRAIN OR STRAIN TO SHOULDER.	1	3	145
EMPLOYEE WAS LIFTING TO DUMP STD MTL CONT AND HE MADE SUDDEN MOVEMENT IN CATCHING STD MTL CONT WHICH WAS UNUSUALLY HEAVY RESULTING IN SPRAIN OR STRAIN TO WRIST.	1	24	493
EMPLOYEE WAS LIFTING TO DUMP CARDBD BOX AND HE OVEREXERTED SELF WITH CARDBOARD BOX WHICH WAS FULL RESULTING IN SPRAIN OR STRAIN TO TRUNK.	1	12	594
EMPLOYEE WAS LIFTING TO DUMP STD MTL CONT AND HE WAS STRUCK BY PARTICLES IN WASTE WHICH WAS EJTD FROM HOPPER RESULTING IN EYE IRRITATION TO EYES.	1	0	39
EMPLOYEE WAS LIFTING TO DUMP STD MTL CONT AND HE STRUCK AGAINST BACK OF VEH RESULTING IN BRUISE TO HAND.	1	0	65
EMPLOYEE WAS LIFTING TO DUMP STD MTL CONT AND HE WAS CAUGHT IN HANDLE OF CONT RESULTING IN SPRAIN OR STRAIN TO FINGERS.	1	4	210

PROFILE	NO. INJ	DAYS	COSTS
EMPLOYEE WAS LIFTING TO DUMP PLASTIC CAN AND HE OVEREXERTED SELF WITH PLASTIC CAN WHICH WAS UNUSUALLY HEAVY RESULTING IN SPRAIN OR STRAIN TO BACK.	2	21	550
EMPLOYEE WAS LIFTING TO DUMP PLASTIC BAG AND HE CONTACTED CAUSTIC OR TOXIC EXHAUST FUMES RESULTING IN ASPHYXIATION OR DROWNING TO INTERNAL ORGANS.	2	0	104
EMPLOYEE WAS LIFTING TO DUMP STD MTL CONT AND HE FELL ON PAVEMENT RESULTING IN BRUISE TO HIPS.	1	0	20
EMPLOYEE WAS LIFTING TO DUMP STD MTL CONT AND HE OVEREXERTED SELF WITH STD MTL CONT WHICH WAS UNUSUALLY HEAVY RESULTING IN SPRAIN OR STRAIN TO CHEST.	1	4	258
EMPLOYEE WAS LIFTING TO DUMP STD MTL CONT AND HE WAS CAUGHT BETWEEN CONT & EDGE OF HOPPER RESULTING IN BRUISE TO HAND.	1	4	134
EMPLOYEE WAS LIFTING TO DUMP STD MTL CONT AND HE STEPPED ON BOARD WITH NAIL RESULTING IN CUT/PUNCTURE TO FOOT.	1	1	67
EMPLOYEE WAS LIFTING TO DUMP STD MTL CONT AND HE WAS HURT BY HANDLING STD MTL CONT WHICH HAD PROTRUDING GLASS RESULTING IN CUT/PUNCTURE TO FINGERS.	1	12	355
EMPLOYEE WAS LIFTING TO DUMP STD MTL CONT AND HE STRUCK SELF WITH STD MTL CONT WHICH WAS UNUSUALLY HEAVY RESULTING IN BRUISE TO KNEE.	1	0	57
EMPLOYEE WAS LIFTING TO DUMP STD MTL CONT AND HE STRUCK SELF WITH STD MTL CONT WHICH WAS FULL AND HAD SLIPPED FROM HIS HANDS RESULTING IN BRUISE TO TOES.	2	0	56
EMPLOYEE WAS LIFTING TO DUMP STD MTL CONT AND HE WAS STRUCK BY UNBUNDLED SHRUBBERY RESULTING IN CUT/PUNCTURE TO EYES.	1	1	39
EMPLOYEE WAS LIFTING TO DUMP PLASTIC BAG AND HE WAS HURT BY HANDLING PLASTIC BAG WHICH HAD PROTRUDING GLASS RESULTING IN CUT/PUNCTURE TO WRIST.	1	4	147
EMPLOYEE WAS LIFTING TO DUMP STD MTL CONT AND HE STRUCK SELF WITH STD MTL CONT WHICH WAS UNUSUALLY HEAVY RESULTING IN ABRASIONS TO LEG.	1	0	35
EMPLOYEE WAS LIFTING TO DUMP STD MTL CONT AND HE WAS STRUCK BY STD MTL CONT WHICH WAS FULL AND HAD SLIPPED FROM HIS HANDS RESULTING IN CUT/PUNCTURE TO ARM.	1	7	209
EMPLOYEE WAS LIFTING TO DUMP STD MTL CONT AND HE WAS STRUCK BY PIECE OF METAL WHICH FELL OUT OF VEH RESULTING IN EYE IRRITATION TO EYES.	1	0	141
EMPLOYEE WAS LIFTING TO DUMP STD MTL CONT AND HE STRUCK SELF WITH STD MTL CONT WHICH WAS UNUSUALLY HEAVY RESULTING IN BRUISE TO ANKLE.	1	0	37
EMPLOYEE WAS LIFTING TO DUMP PLASTIC BAG AND HE SLIPPED WHILE ON PAVEMENT AND STRK AGNST BACK OF VEH RESULTING IN BRUISE TO LEG.	1	1	71
EMPLOYEE WAS LIFTING TO DUMP PLASTIC BAG AND HE STRUCK AGAINST SIDE OF HOPPER RESULTING IN BRUISE TO ELBOW.	1	0	1122
EMPLOYEE WAS LIFTING TO DUMP PLASTIC CAN AND HE STRUCK SELF WITH PLASTIC CAN WHICH WAS FULL AND THE HANDLE BROKE RESULTING IN BRUISE TO HAND.	1	28	1749
EMPLOYEE WAS LIFTING TO DUMP PLASTIC BAG AND HE STRUCK SELF WITH PLASTIC BAG WHICH HAD PROTRUDING GLASS RESULTING IN CUT/PUNCTURE TO ELBOW.	1	3	170
EMPLOYEE WAS LIFTING TO DUMP STD MTL CONT AND HE STRUCK AGAINST STD MTL CONT WHICH WAS FULL AND HAD SHARP EDGES RESULTING IN CUT/PUNCTURE TO ANKLE.	1	0	43
EMPLOYEE WAS LIFTING TO DUMP PLASTIC BAG AND HE OVEREXERTED SELF WITH PLASTIC BAG WHICH WAS FULL RESULTING IN SPRAIN OR STRAIN TO SHOULDER.	1	0	20
EMPLOYEE WAS LIFTING TO DUMP CARDBD BOX AND HE WAS STRUCK BY GLASS WHICH WAS EJTD FROM HOPPER RESULTING IN CUT/PUNCTURE TO FOREHEAD.	1	1	116
EMPLOYEE WAS LIFTING TO DUMP STD MTL CONT AND HE OVEREXERTED SELF WITH STD MTL CONT RESULTING IN SPRAIN OR STRAIN TO BACK.	1	0	24
EMPLOYEE WAS LIFTING TO DUMP STD MTL CONT AND HE WAS HURT BY HANDLING STD MTL CONT WHICH WAS FULL AND HAD SHARP EDGES RESULTING IN CUT/PUNCTURE TO ARM.	1	5	341
EMPLOYEE WAS LIFTING TO DUMP CARDBD BOX AND HE OVEREXERTED SELF WITH CARDBOARD BOX WHICH WAS EMPTY AND UNUSUALLY LG RESULTING IN SPRAIN OR STRAIN TO NECK.	1	0	15
EMPLOYEE WAS LIFTING TO DUMP PLASTIC BAG AND HE OVEREXERTED SELF WITH PLASTIC BAG WHICH WAS UNUSUALLY HEAVY AND BEING HNDLD W OTHER CONT RESULTING IN DISLOCATION TO BACK.	1	88	358

PROFILE	NO. INJ	DAYS	COSTS
EMPLOYEE WAS LIFTING TO DUMP PLASTIC BAG AND HE WAS STRUCK BY TAILGATE RESULTING IN FRACTURE TO ARM.	1	50	766
EMPLOYEE WAS LIFTING TO DUMP STD MTL CONT AND HE STRUCK AGAINST STD MTL CONT WHICH WAS FULL RESULTING IN CUT/PUNCTURE TO FINGERS.	1	0	54
EMPLOYEE WAS LIFTING TO DUMP STD MTL CONT AND HE STRUCK AGAINST BACK OF VEH RESULTING IN BRUISE TO FINGERS.	1	1	63
EMPLOYEE WAS LIFTING TO DUMP STD MTL CONT AND HE OVEREXERTED SELF WITH STD MTL CONT WHICH WAS UNUSUALLY HEAVY RESULTING IN SPRAIN OR STRAIN TO LEG.	1	18	942
EMPLOYEE WAS LIFTING TO DUMP STD MTL CONT AND HE STRUCK AGAINST STD MTL CONT RESULTING IN BRUISE TO KNEE.	1	0	35
EMPLOYEE WAS LIFTING TO DUMP STD MTL CONT AND HE STRUCK AGAINST EDGE OF HOPPER RESULTING IN BRUISE TO ELBOW.	2	38	1480
EMPLOYEE WAS LIFTING TO DUMP STD MTL CONT AND HE OVEREXERTED SELF WITH STD MTL CONT WHICH WAS HVY (PAPER) AND HNDLD WITH COWRKR RESULTING IN SPRAIN OR STRAIN TO BACK.	1	4	106
EMPLOYEE WAS LIFTING TO DUMP CARDBD BOX AND HE MADE SUDDEN MOVEMENT IN CATCHING CARDBOARD BOX WHICH WAS FULL AND HNDLD WITH COWRKR RESULTING IN SPRAIN OR STRAIN TO BACK.	1	7	389
EMPLOYEE WAS LIFTING TO DUMP CRATE AND HE OVEREXERTED SELF WITH CRATE WHICH WAS EMPTY RESULTING IN SPRAIN OR STRAIN TO BACK.	1	41	1937
EMPLOYEE WAS LIFTING TO DUMP STD MTL CONT AND HE SLIPPED STEPPING ON OILY FLOOR RESULTING IN SPRAIN OR STRAIN TO KNEE.	1	0	84
EMPLOYEE WAS LIFTING TO DUMP CARDBD BOX AND HE OVEREXERTED SELF WITH CARDBOARD BOX WHICH WAS FULL AND HNDLD WITH COWRKR RESULTING IN SPRAIN OR STRAIN TO BACK.	1	0	20
EMPLOYEE WAS LIFTING TO DUMP STD MTL CONT AND HE STRUCK AGAINST GARBAGE CAN RACK RESULTING IN BRUISE TO LEG.	1	0	26
EMPLOYEE WAS LIFTING TO DUMP STD MTL CONT AND HE WAS STRUCK BY STD MTL CONT WHICH WAS FULL AND HAD BOUNCED BK FM HOPPER RESULTING IN CUT/PUNCTURE TO FACE.	1	0	2
EMPLOYEE WAS LIFTING TO DUMP PLASTIC BAG AND HE STRUCK AGAINST SIDE OF VEH RESULTING IN BRUISE TO HAND.	1	0	2
EMPLOYEE WAS LIFTING TO DUMP PLASTIC BAG AND HE WAS STRUCK BY BOTTLE WHICH FELL OUT OF TOP OF CONT RESULTING IN AVULSION TO ELBOW.	1	25	91
EMPLOYEE WAS LIFTING TO DUMP PLASTIC CAN AND HE FELL ON GROUND RESULTING IN SPRAIN OR STRAIN TO HIPS.	1	3	20
EMPLOYEE WAS LIFTING TO DUMP STD MTL CONT AND HE STRUCK SELF WITH STD MTL CONT WHICH WAS FULL AND HAD SLIPPED FROM HIS HANDS RESULTING IN CUT/PUNCTURE TO TOES.	1	18	59
EMPLOYEE WAS LIFTING TO DUMP STD MTL CONT AND HE SLIPPED FROM RUNNING BOARD ONTO PAVEMENT RESULTING IN SPRAIN OR STRAIN TO ANKLE.	1	0	3
EMPLOYEE WAS LIFTING TO DUMP STD MTL CONT AND HE WAS CAUGHT IN HANDLE OF CONT (CONT WAS UNUSUALLY HVY) RESULTING IN BRUISE TO HAND.	1	7	21
EMPLOYEE WAS LIFTING TO DUMP STD MTL CONT AND HE WAS STRUCK BY UNKNOWN WASTE WHICH WAS EJTD FROM HOPPER RESULTING IN CUT/PUNCTURE TO FOREHEAD.	1	0	3
EMPLOYEE WAS LIFTING TO DUMP STD MTL CONT AND HE OVEREXERTED SELF WITH STD MTL CONT WHICH WAS HVY (WATER FILLED) RESULTING IN SPRAIN OR STRAIN TO LEG.	1	2	12
EMPLOYEE WAS LIFTING TO DUMP PLASTIC BAG AND HE STRUCK SELF WITH PLASTIC BAG WHICH WAS UNUSUALLY HEAVY RESULTING IN BRUISE TO KNEE.	1	0	1
EMPLOYEE WAS LIFTING TO DUMP STD MTL CONT AND HE WAS CAUGHT IN HANDLE OF CONT RESULTING IN SPRAIN OR STRAIN TO THUMB.	1	0	34
EMPLOYEE WAS LIFTING TO DUMP PLASTIC BAG AND HE OVEREXERTED SELF WITH PLASTIC BAG WHICH WAS UNUSUALLY HEAVY RESULTING IN SPRAIN OR STRAIN TO GROIN.	1	2	82
EMPLOYEE WAS LIFTING TO DUMP STD MTL CONT AND HE STRUCK SELF WITH STD MTL CONT WHICH WAS FULL RESULTING IN BRUISE TO KNEE.	1	1	57
EMPLOYEE WAS LIFTING TO DUMP WHEELED CART AND HE WAS STRUCK BY SHARP OBJ WHICH WAS PROTRUDING FM VEH RESULTING IN INFECTION TO HAND.	1	0	25

PROFILE	NO. INJ	DAYS	COSTS
EMPLOYEE WAS LIFTING TO DUMP STD MTL CONT AND HE WAS HURT BY HANDLING STD MTL CONT WHICH HAD PROTRUDING GLASS RESULTING IN CUT/PUNCTURE TO HAND.	1	0	20
EMPLOYEE WAS LIFTING TO DUMP STD MTL CONT AND HE SLIPPED WHILE ON ICY PAVEMENT AND STRK AGNST BACK OF VEH RESULTING IN BRUISE TO SCALP.	1	0	55
EMPLOYEE WAS LIFTING TO DUMP STD MTL CONT AND HE GOT WASTE PARTICLES IN EYE RESULTING IN INFECTION TO EYES.	1	0	38
EMPLOYEE WAS LIFTING TO DUMP STD MTL CONT AND HE STRUCK AGAINST SIDE OF HOPPER RESULTING IN BRUISE TO ARM.	1	5	212
EMPLOYEE WAS LIFTING TO DUMP PLASTIC BAG AND HE WAS STRUCK BY GLASS WHICH FELL OUT OF BOTTOM OF CONT RESULTING IN CUT/PUNCTURE TO WRIST.	1	0	104
EMPLOYEE WAS LIFTING TO DUMP STD MTL CONT AND HE SLIPPED STEPPING ON ICY GROUND RESULTING IN UNKNOWN TYPE OF INJURY TO KNEE.	1	13	345
EMPLOYEE WAS LIFTING TO DUMP WHEELED CART AND HE GOT WASTE PARTICLES IN EYE RESULTING IN EYE IRRITATION TO EYES.	1	0	23
EMPLOYEE WAS LIFTING TO DUMP STD MTL CONT AND HE FELL ON WASTE ON GROUND RESULTING IN CUT/PUNCTURE TO ARM.	1	0	62
EMPLOYEE WAS LIFTING TO DUMP PLASTIC BAG AND HE FELL ON ICY PAVEMENT RESULTING IN SPRAIN OR STRAIN TO HAND.	1	4	271
EMPLOYEE.WAS LIFTING TO DUMP PLASTIC BAG AND HE STRUCK AGAINST BACK OF VEH RESULTING IN BRUISE TO ARM.	1	0	17
EMPLOYEE WAS LIFTING TO DUMP STD MTL CONT AND HE OVEREXERTED SELF WITH STD MTL CONT WHICH WAS UNUSUALLY HEAVY RESULTING IN SPRAIN OR STRAIN TO WRIST.	1	4	63
EMPLOYEE WAS LIFTING TO DUMP STD MTL CONT AND HE OVEREXERTED SELF WITH STD MTL CONT WHICH WAS FULL RESULTING IN SPRAIN OR STRAIN TO WRIST.	1	0	20
EMPLOYEE WAS LIFTING TO DUMP STD MTL CONT AND HE OVEREXERTED SELF WITH STD MTL CONT WHICH WAS UNUSUALLY HEAVY RESULTING IN SPRAIN OR STRAIN TO NECK.	1	3	104
EMPLOYEE WAS LIFTING TO DUMP PLASTIC BAG AND HE OVEREXERTED SELF WITH PLASTIC BAG WHICH WAS UNUSUALLY HEAVY RESULTING IN SPRAIN OR STRAIN TO HIPS.	1	6	171
EMPLOYEE WAS LIFTING TO DUMP PLASTIC BAG AND HE WAS HURT BY HANDLING PLASTIC BAG WHICH HAD PROTRUDING WASTE RESULTING IN CUT/PUNCTURE TO FINGERS.	1	0	32
EMPLOYEE WAS LIFTING TO DUMP TOTE BARREL AND HE GOT WASTE PARTICLES IN EYE RESULTING IN EYE IRRITATION TO EYES.	1	0	16
EMPLOYEE WAS LIFTING TO DUMP TOTE BARREL AND HE OVEREXERTED SELF WITH TOTE BARREL WHICH WAS HVY (WATER FILLED) RESULTING IN SPRAIN OR STRAIN TO BACK.	1	4	213
EMPLOYEE WAS LIFTING TO DUMP STD MTL CONT AND HE WAS STRUCK BY PIECE OF METAL WHICH FELL OUT OF TOP OF CONT RESULTING IN CUT/PUNCTURE TO FOOT.	1	3	107
EMPLOYEE WAS LIFTING TO DUMP STD MTL CONT AND HE SLIPPED STEPPING ON PAVEMENT RESULTING IN UNKNOWN TYPE OF INJURY TO LEG.	1	0	83
EMPLOYEE WAS LIFTING TO DUMP UNK CONT TYPE AND HE MADE SUDDEN MOVEMENT RESULTING IN SPRAIN OR STRAIN TO ANKLE.	1	0	35
EMPLOYEE WAS LIFTING TO DUMP STD MTL CONT AND HE WAS HURT BY HANDLING STD MTL CONT WHICH WAS FULL AND HAD SHARP EDGES RESULTING IN CUT/PUNCTURE TO WRIST.	1	0	20
EMPLOYEE WAS LIFTING TO DUMP NSTD MTL CONT AND HE SLIPPED STEPPING ON ICY GROUND RESULTING IN SPRAIN OR STRAIN TO BACK.	1	0	62
EMPLOYEE WAS LIFTING TO DUMP STD MTL CONT AND HE STRUCK AGAINST WHEELED CART RESULTING IN BRUISE TO ELBOW.	1	0	16
EMPLOYEE WAS LIFTING TO DUMP STD MTL CONT AND HE STRUCK SELF WITH STD MTL CONT WHICH WAS UNUSUALLY HEAVY AND HAD SLIPPED FROM HIS HANDS RESULTING IN BRUISE TO KNEE.	1	0	20
EMPLOYEE WAS LIFTING TO DUMP PLASTIC BAG AND HE WAS HURT BY HANDLING PLASTIC BAG WHICH HAD A PROTRUDING HYPODERMIC NEEDLE RESULTING IN CUT/PUNCTURE TO HAND.	1	0	39
EMPLOYEE WAS LIFTING TO DUMP STD MTL CONT AND HE SLIPPED STEPPING ON OILY PAVEMENT RESULTING IN SPRAIN OR STRAIN TO ANKLE.	1	8	358

PROFILE	NO. INJ	DAYS	COSTS
EMPLOYEE WAS LIFTING TO DUMP STD MTL CONT AND HE WAS STRUCK BY UNKNOWN WASTE WHICH WAS EJTD FROM HOPPER RESULTING IN CUT/PUNCTURE TO ARM.	1	0	20
EMPLOYEE WAS LIFTING TO DUMP STD MTL CONT AND HE WAS HURT BY HANDLING STD MTL CONT WHICH WAS FULL AND HAD SHARP EDGES RESULTING IN CUT/PUNCTURE TO THUMB.	1	0	60
EMPLOYEE WAS LIFTING TO DUMP STD MTL CONT AND HE WAS STRUCK BY STD MTL CONT WHICH WAS FULL AND THE HANDLE BROKE RESULTING IN CUT/PUNCTURE TO FINGERS.	1	0	20
TOTAL	375	2961	121230

ALL USERS
DETAILED DESCRIPTION OF
CARRYING CONTAINER ACCIDENTS
OSHA RECORDABLE INJURIES ONLY

REPORTING PERIOD: DECEMBER 1975 - DECEMBER 1976

THIS PROFILE IS A FORMATTED SENTENCE CONSISTING OF ACTIVITY, ACCIDENT TYPE, NATURE OF INJURY AND PART OF BODY.

PROFILE	NO. INJ	DAYS	COSTS
EMPLOYEE WAS CARRYING STD MTL CONT AND HE SLIPPED STEPPING ON ICY PAVEMENT RESULTING IN SPRAIN OR STRAIN TO BACK.	3	12	541
EMPLOYEE WAS CARRYING STD MTL CONT AND HE FELL WHILE ON ICY PAVEMENT RESULTING IN SPRAIN OR STRAIN TO ABDOMEN.	1	10	462
EMPLOYEE WAS CARRYING STD MTL CONT AND HE SLIPPED STEPPING ON UNEVEN PAVEMENT RESULTING IN SPRAIN OR STRAIN TO KNEE.	1	2	143
EMPLOYEE WAS CARRYING STD MTL CONT AND HE SLIPPED STEPPING ON UNEVEN CURB IN STEPPING DOWN RESULTING IN FRACTURE TO ANKLE.	1	62	758
EMPLOYEE WAS CARRYING STD MTL CONT AND HE FELL ON INCLINED GROUND RESULTING IN BRUISE TO SKULL.	1	0	20
EMPLOYEE WAS CARRYING STD MTL CONT AND HE FELL WHILE ON WET PAVEMENT AND STRK AGNST STEP OF VEH RESULTING IN BRUISE TO LEG.	1	6	286
EMPLOYEE WAS CARRYING STD MTL CONT AND HE SLIPPED FROM WET CURB ONTO PAVEMENT RESULTING IN SPRAIN OR STRAIN TO BACK.	1	12	471
EMPLOYEE WAS CARRYING STD MTL CONT AND HE FELL ON ICY PAVEMENT RESULTING IN SPRAIN OR STRAIN TO BACK.	2	17	793
EMPLOYEE WAS CARRYING TOTE BARREL AND HE OVEREXERTED SELF WITH TOTE BARREL WHICH WAS FULL AND UNUSUALLY LG RESULTING IN SPRAIN OR STRAIN TO ANKLE.	1	0	29
EMPLOYEE WAS CARRYING STD MTL CONT AND HE STRUCK SELF WITH STD MTL CONT WHICH WAS EMPTY AND HAD SLIPPED FROM HIS HANDS RESULTING IN BRUISE TO TOES.	1	1	72
EMPLOYEE WAS CARRYING STD MTL CONT AND HE SLIPPED STEPPING ON UNEVEN PAVEMENT RESULTING IN SPRAIN OR STRAIN TO ANKLE.	4	14	912
EMPLOYEE WAS CARRYING PLASTIC BAG AND HE MADE SUDDEN MOVEMENT RESULTING IN DISLOCATION TO SHOULDER.	1	53	421
EMPLOYEE WAS CARRYING STD MTL CONT AND HE FELL ON ICY GROUND RESULTING IN SPRAIN OR STRAIN TO BACK.	1	15	684
EMPLOYEE WAS CARRYING STD MTL CONT AND HE STRUCK AGAINST STD MTL CONT RESULTING IN CUT/PUNCTURE TO LEG.	1	0	60
EMPLOYEE WAS CARRYING STD MTL CONT AND HE SLIPPED STEPPING ON DEPRESSION RESULTING IN SPRAIN OR STRAIN TO ANKLE.	1	5	206
EMPLOYEE WAS CARRYING STD MTL CONT AND HE WAS STRUCK BY CONT HANDLED BY COWORKER RESULTING IN BRUISE TO ELBOW.	2	99	750
EMPLOYEE WAS CARRYING TOTE BARREL AND HE MADE SUDDEN MOVEMENT RESULTING IN SPRAIN OR STRAIN TO KNEE.	1	10	313
EMPLOYEE WAS CARRYING STD MTL CONT AND HE OVEREXERTED SELF WITH STD MTL CONT WHICH WAS EMPTY RESULTING IN SPRAIN OR STRAIN TO NECK.	1	13	301
EMPLOYEE WAS CARRYING TOTE BARREL AND HE STRUCK AGAINST BACK OF VEH RESULTING IN BRUISE TO ELBOW.	1	8	169
EMPLOYEE WAS CARRYING TOTE BARREL AND HE FELL ON DEPRESSION RESULTING IN SPRAIN OR STRAIN TO ANKLE.	1	3	67
EMPLOYEE WAS CARRYING TOTE BARREL AND HE FELL ON INCLINED GROUND RESULTING IN BRUISE TO SHOULDER.	1	4	188
EMPLOYEE WAS CARRYING STD MTL CONT AND HE STRUCK SELF WITH STD MTL CONT RESULTING IN BRUISE TO TOES.	1	3	211
EMPLOYEE WAS CARRYING STD MTL CONT AND HE WAS HURT BY HANDLING STD MTL CONT WHICH HAD PROTRUDING WASTE RESULTING IN CUT/PUNCTURE TO FINGERS.	1	10	80
EMPLOYEE WAS CARRYING STD MTL CONT AND HE SLIPPED FROM CURB ONTO PAVEMENT RESULTING IN SPRAIN OR STRAIN TO ANKLE.	1	8	374
EMPLOYEE WAS CARRYING OIL DRUM AND HE FELL FROM WET CURB ONTO PAVEMENT RESULTING IN BRUISE TO BACK.	1	2	61
EMPLOYEE WAS CARRYING PLASTIC CAN AND HE FELL ON OILY PAVEMENT RESULTING IN SPRAIN OR STRAIN TO BACK.	1	4	542
EMPLOYEE WAS CARRYING STD MTL CONT AND HE SLIPPED STEPPING ON OBJ ON GROUND RESULTING IN SPRAIN OR STRAIN TO ANKLE.	1	3	52
EMPLOYEE WAS CARRYING STD MTL CONT AND HE SLIPPED WHILE ON WET PAVEMENT AND STRK AGNST STD MTL CONT RESULTING IN BRUISE TO KNEE.	1	10	407
EMPLOYEE WAS CARRYING PLASTIC BAG AND HE SLIPPED FROM WET CURB ONTO PAVEMENT RESULTING IN SPRAIN OR STRAIN TO ANKLE.	1	14	1024
EMPLOYEE WAS CARRYING HANDTOOL AND HE SLIPPED WHILE ON STEP OF VEH AND STRK AGNST BACK OF VEH RESULTING IN BRUISE TO ARM.	1	0	20

PROFILE	NO. INJ	DAYS	COSTS
EMPLOYEE WAS CARRYING PLASTIC BAG AND HE FELL WHILE ON PAVEMENT AND STRK AGNST PLASTIC BAG RESULTING IN CUT/PUNCTURE TO HAND.	1	0	11
EMPLOYEE WAS CARRYING STD MTL CONT AND HE OVEREXERTED SELF WITH STD MTL CONT WHICH WAS UNUSUALLY HEAVY RESULTING IN SPRAIN OR STRAIN TO LEG.	1	28	917
EMPLOYEE WAS CARRYING TOTE BARREL AND HE FELL ON OBJ PROTRUDING FROM GRND RESULTING IN BRUISE TO FINGERS.	1	0	50
EMPLOYEE WAS CARRYING UNK CONT TYPE AND HE WAS STRUCK BY UNK CONT TYPE WHICH WAS EMPTY RESULTING IN BRUISE TO KNEE.	1	0	23
EMPLOYEE WAS CARRYING AND HE WAS STRUCK BY HANDTOOL RESULTING IN CUT/PUNCTURE TO FACE.	1	1	98
EMPLOYEE WAS CARRYING STD MTL CONT AND HE STRUCK AGAINST BACK OF VEH RESULTING IN BRUISE TO FINGERS.	1	0	55
EMPLOYEE WAS CARRYING STD MTL CONT AND HE SLIPPED STEPPING ON COLLAPSING INCLINED GROUND RESULTING IN SPRAIN OR STRAIN TO KNEE.	1	148	7439
EMPLOYEE WAS CARRYING STD MTL CONT AND HE STRUCK AGAINST BACK OF VEH RESULTING IN BRUISE TO LEG.	1	0	36
EMPLOYEE WAS CARRYING STD MTL CONT AND HE FELL FROM WET INCLINED GRASS RESULTING IN SPRAIN OR STRAIN TO BACK.	1	0	20
EMPLOYEE WAS CARRYING STD MTL CONT AND HE FELL FROM COLLAPSING OTHER SURFACE ONTO PAVEMENT RESULTING IN FRACTURE TO ELBOW.	1	8	519
EMPLOYEE WAS CARRYING PLASTIC BAG AND HE SLIPPED WHILE ON DEPRESSION AND STRK AGNST SIDE OF VEH RESULTING IN BRUISE TO ELBOW.	1	32	1584
EMPLOYEE WAS CARRYING TOTE BARREL AND HE SLIPPED STEPPING ON OBJ ON GROUND RESULTING IN SPRAIN OR STRAIN TO ANKLE.	2	6	159
EMPLOYEE WAS CARRYING STD MTL CONT AND HE SLIPPED STEPPING ON WET PAVEMENT RESULTING IN SPRAIN OR STRAIN TO ANKLE.	1	10	466
EMPLOYEE WAS CARRYING PLASTIC BAG AND HE WAS HURT BY HANDLING PLASTIC BAG WHICH HAD PROTRUDING GLASS RESULTING IN INFECTION TO THUMB.	1	0	20
EMPLOYEE WAS CARRYING STD MTL CONT AND HE FELL WHILE ON SLIPPERY PAVEMENT AND STRK AGNST EDGE OF HOPPER RESULTING IN MULTIPLE INJURIES TO MULTIPLE BODY PARTS.	1	88	3394
EMPLOYEE WAS CARRYING STD MTL CONT AND HE WAS STRUCK BY GLASS WHICH WAS EJTD FROM HOPPER RESULTING IN CUT/PUNCTURE TO LEG.	1	0	77
EMPLOYEE WAS CARRYING STD MTL CONT AND HE STEPPED ON HANDTOOL RESULTING IN CUT/PUNCTURE TO FOOT.	1	1	32
EMPLOYEE WAS CARRYING PLASTIC BAG AND HE STRUCK SELF WITH PLASTIC BAG WHICH HAD PROTRUDING GLASS RESULTING IN CUT/PUNCTURE TO LEG.	11	37	2255
EMPLOYEE WAS CARRYING STD MTL CONT AND HE STEPPED ON NAIL RESULTING IN CUT/PUNCTURE TO TOES.	2	0	44
EMPLOYEE WAS CARRYING TOTE BARREL AND HE SLIPPED STEPPING ON OBJ ON GROUND RESULTING IN SPRAIN OR STRAIN TO WRIST.	1	2	107
EMPLOYEE WAS CARRYING STD MTL CONT AND HE WAS STRUCK BY VEH RESULTING IN UNKNOWN TYPE OF INJURY TO CHEST.	1	10	535
EMPLOYEE WAS CARRYING STD MTL CONT AND HE WAS STRUCK BY VEH RESULTING IN BRUISE TO MULTIPLE BODY PARTS.	3	127	2263
EMPLOYEE WAS CARRYING STD MTL CONT AND HE STEPPED ON BOARD WITH NAIL RESULTING IN CUT/PUNCTURE TO FOOT.	3	6	369
EMPLOYEE WAS CARRYING STD MTL CONT AND HE SLIPPED WHILE ON UNEVEN PAVEMENT AND STRK AGNST STD MTL CONT RESULTING IN SPRAIN OR STRAIN TO FINGERS.	1	0	55
EMPLOYEE WAS CARRYING STD MTL CONT AND HE FELL ON PAVEMENT RESULTING IN SPRAIN OR STRAIN TO KNEE.	1	6	289
EMPLOYEE WAS CARRYING TOTE BARREL AND HE OVEREXERTED SELF WITH TOTE BARREL WHICH WAS UNUSUALLY HEAVY AND UNUSUALLY LG RESULTING IN SPRAIN OR STRAIN TO BACK.	2	34	2050
EMPLOYEE WAS CARRYING TOTE BARREL AND HE SLIPPED STEPPING ON DEPRESSION RESULTING IN SPRAIN OR STRAIN TO FOOT.	2	5	80
EMPLOYEE WAS CARRYING TOTE BARREL AND HE MADE SUDDEN MOVEMENT RESULTING IN SPRAIN OR STRAIN TO FOOT.	1	14	518
EMPLOYEE WAS CARRYING STD MTL CONT AND HE SLIPPED STEPPING ON WET PAVEMENT IN STEPPING DOWN RESULTING IN SPRAIN OR STRAIN TO ANKLE.	1	0	40
EMPLOYEE WAS CARRYING STD MTL CONT AND HE WAS CAUGHT BETWEEN MOVING VEH AND OBJ RESULTING IN MULTIPLE INJURIES TO MULTIPLE BODY PARTS.	1	[illegible]	[illegible]
EMPLOYEE WAS CARRYING STD MTL CONT AND HE FELL ON WET GROUND [illegible] HOPPER AND STRK AGNST EDGE OF HOPPER [illegible]	1	0	24

PROFILE	NO. INJ	DAYS	COSTS
EMPLOYEE WAS CARRYING STD MTL CONT AND HE OVEREXERTED SELF WITH STD MTL CONT WHICH WAS HVY (YARD CLIPPINGS) AND BEING HNDLD W OTHER CONT RESULTING IN SPRAIN OR STRAIN TO BACK.	1	1	65
EMPLOYEE WAS CARRYING TOTE BARREL AND HE STRUCK SELF WITH TOTE BARREL WHICH HAD PROTRUDING GLASS RESULTING IN CUT/PUNCTURE TO LEG.	1	0	42
EMPLOYEE WAS CARRYING STD MTL CONT AND HE SLIPPED WHILE ON PAVEMENT AND STRK AGNST EDGE OF HOPPER RESULTING IN BRUISE TO HAND.	1	0	26
EMPLOYEE WAS CARRYING STD MTL CONT AND HE STRUCK SELF WITH STD MTL CONT WHICH WAS FULL AND HAD SLIPPED FROM HIS HANDS RESULTING IN OTHER TYPE OF INJURY TO TOES.	1	2	146
EMPLOYEE WAS CARRYING STD MTL CONT AND HE FELL ON GROUND RESULTING IN SPRAIN OR STRAIN TO KNEE.	1	21	1118
EMPLOYEE WAS CARRYING TOTE BARREL AND HE OVEREXERTED SELF WITH TOTE BARREL WHICH WAS HVY (WATER FILLED) RESULTING IN SPRAIN OR STRAIN TO BACK.	1	4	111
EMPLOYEE WAS CARRYING CARDBD BOX AND HE FELL ON DEPRESSION RESULTING IN SPRAIN OR STRAIN TO ANKLE.	1	12	459
EMPLOYEE WAS CARRYING NSTD MTL CONT AND HE SLIPPED STEPPING ON GRAVEL RESULTING IN SPRAIN OR STRAIN TO BACK.	1	7	20
EMPLOYEE WAS CARRYING TOTE BARREL AND HE FELL ON GROUND RESULTING IN SPRAIN OR STRAIN TO BACK.	1	1	69
EMPLOYEE WAS CARRYING TOTE BARREL AND HE OVEREXERTED SELF WITH TOTE BARREL WHICH WAS UNUSUALLY HEAVY AND SLIPPERY (WET) RESULTING IN SPRAIN OR STRAIN TO BACK.	1	6	256
EMPLOYEE WAS CARRYING STD MTL CONT AND HE WAS STRUCK BY CHEMICAL WHICH WAS EJTD FROM HOPPER RESULTING IN DERMATITIS TO MULTIPLE BODY PARTS.	1	0	39
EMPLOYEE WAS CARRYING WHEELED CART AND HE MADE SUDDEN MOVEMENT IN CATCHING WHEELED CART WHICH WAS UNUSUALLY HEAVY AND HAD SLIPPED FROM HIS HANDS RESULTING IN SPRAIN OR STRAIN TO BACK.	1	6	438
EMPLOYEE WAS CARRYING CARDBD BOX AND HE WAS STRUCK BY ROCKS/CONCRETE/DIRT WHICH FELL OUT OF TOP OF CONT RESULTING IN BRUISE TO FOOT.	1	3	172
EMPLOYEE WAS CARRYING STD MTL CONT AND HE MADE SUDDEN MOVEMENT IN STEPPING DOWN RESULTING IN SPRAIN OR STRAIN TO ANKLE.	3	12	899
EMPLOYEE WAS CARRYING STD MTL CONT AND HE OVEREXERTED SELF WITH STD MTL CONT WHICH WAS UNUSUALLY HEAVY RESULTING IN SPRAIN OR STRAIN TO BACK.	3	39	1564
EMPLOYEE WAS CARRYING STD MTL CONT AND HE SLIPPED STEPPING ON METER IN STEPPING DOWN RESULTING IN SPRAIN OR STRAIN TO ANKLE.	1	0	34
EMPLOYEE WAS CARRYING TOTE BARREL AND HE FELL ON OBJ PROTRUDING FROM GRND RESULTING IN BRUISE TO ANKLE.	1	0	50
EMPLOYEE WAS CARRYING STD MTL CONT AND HE FELL ON OBJ ON GROUND RESULTING IN SPRAIN OR STRAIN TO FOOT.	1	1	65
EMPLOYEE WAS CARRYING CARDBD BOX AND HE FELL ON WET GRASS RESULTING IN FRACTURE TO WRIST.	1	0	172
EMPLOYEE WAS CARRYING STD MTL CONT AND HE SLIPPED WHILE ON INCLINED GRASS AND STRK AGNST STD MTL CONT RESULTING IN BRUISE TO KNEE.	1	22	1007
EMPLOYEE WAS CARRYING CONT LID AND HE FELL ON DEPRESSION RESULTING IN SPRAIN OR STRAIN TO LEG.	1	13	465
EMPLOYEE WAS CARRYING STD MTL CONT AND HE FELL ON SLIPPERY WASTE ON GROUND RESULTING IN CUT/PUNCTURE TO ARM.	1	0	20
EMPLOYEE WAS CARRYING STD MTL CONT AND HE OVEREXERTED SELF WITH STD MTL CONT WHICH WAS FULL RESULTING IN SPRAIN OR STRAIN TO BACK.	1	17	469
EMPLOYEE WAS CARRYING CARDBD BOX AND HE STRUCK SELF WITH CARDBOARD BOX WHICH HAD PROTRUDING SHRUBBERY RESULTING IN CUT/PUNCTURE TO EYES.	1	1	36
EMPLOYEE WAS CARRYING STD MTL CONT AND HE STRUCK AGAINST OBJ PROTRUDING FROM GRND RESULTING IN BRUISE TO FOOT.	1	0	15
EMPLOYEE WAS CARRYING STD MTL CONT AND HE OVEREXERTED SELF WITH STD MTL CONT WHICH WAS EMPTY RESULTING IN HERNIA TO GROIN.	1	35	1818
EMPLOYEE WAS CARRYING STD MTL CONT AND HE STRUCK AGAINST STD MTL CONT RESULTING IN BRUISE TO KNEE.	1	0	20
EMPLOYEE WAS CARRYING PLASTIC BAG AND HE STRUCK SELF WITH PLASTIC BAG WHICH HAD PROTRUDING WASTE RESULTING IN CUT/PUNCTURE TO KNEE.	1	0	22
EMPLOYEE WAS CARRYING STD MTL CONT AND HE WAS STRUCK BY CHEMICAL WHICH WAS EJTD FROM HOPPER RESULTING IN DERMATITIS TO FACE.	1	1	129
EMPLOYEE WAS CARRYING STD MTL CONT AND HE FELL FROM OTHER SURFACE ONTO PAVEMENT RESULTING IN CUT/PUNCTURE TO LEG.	1	0	146
EMPLOYEE WAS CARRYING STD MTL CONT AND HE FELL ON GRASS RESULTING IN SPRAIN OR STRAIN TO BACK.	1	0	20

PROFILE	NO. INJ	DAYS	COSTS
EMPLOYEE WAS CARRYING TOTE BARREL AND HE OVEREXERTED SELF WITH TOTE BARREL WHICH WAS FULL RESULTING IN SPRAIN OR STRAIN TO BACK.	1	28	1268
EMPLOYEE WAS CARRYING CARDBD BOX AND HE SLIPPED STEPPING ON OBJ ON GROUND RESULTING IN SPRAIN OR STRAIN TO ANKLE.	1	46	565
EMPLOYEE WAS CARRYING STD MTL CONT AND HE SLIPPED STEPPING ON OBJ ON GROUND RESULTING IN SPRAIN OR STRAIN TO BACK.	1	4	189
EMPLOYEE WAS CARRYING STD MTL CONT AND HE OVEREXERTED SELF WITH STD MTL CONT WHICH WAS UNUSUALLY HEAVY AND BEING HNDLD W OTHER CONT RESULTING IN SPRAIN OR STRAIN TO NECK.	1	5	241
EMPLOYEE WAS CARRYING STD MTL CONT AND HE WAS STRUCK BY VEH RESULTING IN BRUISE TO LEG.	1	17	329
EMPLOYEE WAS CARRYING STD MTL CONT AND HE SLIPPED STEPPING ON PAVEMENT IN STEPPING DOWN RESULTING IN SPRAIN OR STRAIN TO LEG.	1	34	1568
EMPLOYEE WAS CARRYING STD MTL CONT AND HE FELL WHILE ON STEP OF VEH AND STRK AGNST SIDE OF VEH RESULTING IN FRACTURE TO JAW.	1	0	55
EMPLOYEE WAS CARRYING CARDBD BOX AND HE FELL WHILE ON GROUND AND STRK AGNST OBJ PROTRUDING FRM GRND RESULTING IN CUT/PUNCTURE TO NECK.	1	3	143
EMPLOYEE WAS CARRYING STD MTL CONT AND HE SLIPPED STEPPING ON SLIPPERY OBJ ON GROUND RESULTING IN DISLOCATION TO KNEE.	1	2	234
EMPLOYEE WAS CARRYING STD MTL CONT AND HE WAS STRUCK BY VEH RESULTING IN ABRASIONS TO KNEE.	1	2	111
EMPLOYEE WAS CARRYING STD MTL CONT AND HE FELL FROM WET INCLINED GRASS RESULTING IN BRUISE TO BACK.	1	9	610
EMPLOYEE WAS CARRYING STD MTL CONT AND HE OVEREXERTED SELF WITH STD MTL CONT WHICH WAS FULL RESULTING IN DISLOCATION TO KNEE.	1	31	2915
EMPLOYEE WAS CARRYING COMPRSD WASTE BAG AND HE STRUCK SELF WITH COMPRESSED WASTE BAG WHICH HAD PROTRUDING GLASS RESULTING IN INFECTION TO LEG.	1	0	23
EMPLOYEE WAS CARRYING PLASTIC BAG AND HE WAS HURT BY HANDLING PLASTIC BAG WHICH HAD PROTRUDING GLASS RESULTING IN CUT/PUNCTURE TO ELBOW.	1	0	20
EMPLOYEE WAS CARRYING STD MTL CONT AND HE SLIPPED STEPPING ON WET GRASS RESULTING IN SPRAIN OR STRAIN TO GROIN.	1	7	404
EMPLOYEE WAS CARRYING STD MTL CONT AND HE MADE SUDDEN MOVEMENT RESULTING IN SPRAIN OR STRAIN TO SHOULDER.	1	8	441
EMPLOYEE WAS CARRYING STD MTL CONT AND HE WAS INJURED IN OTHER TYPE OF ACCIDENT RESULTING IN ASPHYXIATION OR DROWNING TO INTERNAL ORGANS.	1	0	37
EMPLOYEE WAS CARRYING STD MTL CONT AND HE MADE SUDDEN MOVEMENT AND HNDLD WITH COWRKR RESULTING IN SPRAIN OR STRAIN TO SHOULDER.	1	14	695
EMPLOYEE WAS CARRYING STD MTL CONT AND HE SLIPPED STEPPING ON WASTE ON GROUND RESULTING IN SPRAIN OR STRAIN TO ANKLE.	2	24	2015
EMPLOYEE WAS CARRYING STD MTL CONT AND HE FELL FROM CURB ONTO PAVEMENT RESULTING IN SPRAIN OR STRAIN TO KNEE.	1	10	911
EMPLOYEE WAS CARRYING TOTE BARREL AND HE FELL ON PAVEMENT RESULTING IN BRUISE TO BACK.	1	0	0
EMPLOYEE WAS CARRYING STD MTL CONT AND HE WAS CAUGHT BETWEEN TWO OBJECTS RESULTING IN SPRAIN OR STRAIN TO GROIN.	1	0	72
EMPLOYEE WAS CARRYING STD MTL CONT AND HE OVEREXERTED SELF WITH STD MTL CONT WHICH WAS EMPTY RESULTING IN SPRAIN OR STRAIN TO BACK.	1	4	151
EMPLOYEE WAS CARRYING TOTE BARREL AND HE SLIPPED STEPPING ON DEPRESSION RESULTING IN SPRAIN OR STRAIN TO ANKLE.	3	3	205
EMPLOYEE WAS CARRYING PLASTIC BAG AND HE STRUCK SELF WITH PLASTIC BAG WHICH HAD A PROTRUDING HYPODERMIC NEEDLE RESULTING IN CUT/PUNCTURE TO ARM.	1	0	10
EMPLOYEE WAS CARRYING STD MTL CONT AND HE SLIPPED STEPPING ON OBJ ON GROUND RESULTING IN SPRAIN OR STRAIN TO LEG.	1	13	1134
EMPLOYEE WAS CARRYING STD MTL CONT AND HE WAS STRUCK BY BOARD WITH NAIL WHICH FELL OUT OF TOP OF CONT RESULTING IN CUT/PUNCTURE TO ARM.	1	0	36
EMPLOYEE WAS CARRYING PLASTIC BAG AND HE MADE SUDDEN MOVEMENT IN CATCHING PLASTIC BAG WHICH WAS HVY (ROCKS) AND HAD THE BOTTOM FALL OUT RESULTING IN SPRAIN OR STRAIN TO BACK.	1	4	212
EMPLOYEE WAS CARRYING UNBUNDLED SHRUBBERY AND HE STRUCK AGAINST BACK OF VEH RESULTING IN BRUISE TO KNEE.	1	0	42

PROFILE	NO. INJ	DAYS	COSTS
EMPLOYEE WAS CARRYING TOTE BARREL AND HE FELL ON GRAVEL RESULTING IN BRUISE TO KNEE.	1	0	20
EMPLOYEE WAS CARRYING STD MTL CONT AND HE STRUCK SELF WITH STD MTL CONT WHICH WAS EMPTY RESULTING IN BRUISE TO TOES.	1	18	93
EMPLOYEE WAS CARRYING STD MTL CONT AND HE SLIPPED FROM WET STAIRS RESULTING IN SPRAIN OR STRAIN TO WRIST.	1	19	941
EMPLOYEE WAS CARRYING PLASTIC BAG AND HE SLIPPED STEPPING ON WET PAVEMENT RESULTING IN SPRAIN OR STRAIN TO ARM.	1	2	103
EMPLOYEE WAS CARRYING STD MTL CONT AND HE SLIPPED FROM WET CURB RESULTING IN SPRAIN OR STRAIN TO KNEE.	1	4	377
EMPLOYEE WAS CARRYING STD MTL CONT AND HE STRUCK SELF WITH STD MTL CONT WHICH WAS FULL AND BEING HNDLD W OTHER CONT RESULTING IN BRUISE TO TOES.	1	0	35
EMPLOYEE WAS CARRYING STD MTL CONT AND HE SLIPPED STEPPING ON GROUND RESULTING IN SPRAIN OR STRAIN TO BACK.	1	128	5960
EMPLOYEE WAS CARRYING TOTE BARREL AND HE STEPPED ON NAIL RESULTING IN CUT/PUNCTURE TO FOOT.	2	2	74
EMPLOYEE WAS CARRYING STD MTL CONT AND HE SLIPPED STEPPING ON CURB IN STEPPING DOWN RESULTING IN SPRAIN OR STRAIN TO ANKLE.	1	4	132
EMPLOYEE WAS CARRYING STD MTL CONT AND HE SLIPPED STEPPING ON WET WASTE ON GROUND RESULTING IN UNKNOWN TYPE OF INJURY TO LEG.	1	3	107
EMPLOYEE WAS CARRYING STD MTL CONT AND HE OVEREXERTED SELF WITH STD MTL CONT WHICH WAS UNUSUALLY HEAVY RESULTING IN SPRAIN OR STRAIN TO SHOULDER.	2	2	111
EMPLOYEE WAS CARRYING PLASTIC BAG AND HE STRUCK AGAINST BACK OF VEH RESULTING IN CUT/PUNCTURE TO KNEE.	1	0	69
EMPLOYEE WAS CARRYING STD MTL CONT AND HE FELL ON WET PAVEMENT RESULTING IN SPRAIN OR STRAIN TO CHEST.	1	9	462
EMPLOYEE WAS CARRYING PLASTIC BAG AND HE STRUCK SELF WITH PLASTIC BAG WHICH HAD PROTRUDING WASTE RESULTING IN CUT/PUNCTURE TO LEG.	1	5	273
EMPLOYEE WAS CARRYING STD MTL CONT AND HE STRUCK AGAINST SIDE OF VEH RESULTING IN BRUISE TO LEG.	1	0	0
EMPLOYEE WAS CARRYING TOTE BARREL AND HE STRUCK SELF WITH TOTE BARREL WHICH WAS FULL RESULTING IN SPRAIN OR STRAIN TO NECK.	1	1	66
EMPLOYEE WAS CARRYING TOTE BARREL AND HE FELL ON GROUND RESULTING IN ABRASIONS TO EYES.	1	0	92
EMPLOYEE WAS CARRYING TOTE BARREL AND HE FELL ON WASTE ON GROUND RESULTING IN CUT/PUNCTURE TO KNEE.	1	0	37
EMPLOYEE WAS CARRYING STD MTL CONT AND HE STRUCK SELF WITH STD MTL CONT WHICH WAS UNUSUALLY HEAVY AND HAD SLIPPED FROM HIS HANDS RESULTING IN BRUISE TO LEG.	1	0	90
EMPLOYEE WAS CARRYING STD MTL CONT AND HE MADE SUDDEN MOVEMENT RESULTING IN SPRAIN OR STRAIN TO ANKLE.	2	51	1532
EMPLOYEE WAS CARRYING STD MTL CONT AND HE FELL ON OBJ ON GROUND RESULTING IN DISLOCATION TO BACK.	1	3	29
EMPLOYEE WAS CARRYING STD MTL CONT AND HE SLIPPED WHILE ON PAVEMENT AND STRK AGNST BACK OF VEH RESULTING IN SPRAIN OR STRAIN TO CHEST.	1	12	85
EMPLOYEE WAS CARRYING STD MTL CONT AND HE FELL ON OBJ ON GROUND RESULTING IN BRUISE TO SHOULDER.	1	0	115
EMPLOYEE WAS CARRYING STD MTL CONT AND HE FELL ON WET DEPRESSION IN STEPPING DOWN RESULTING IN SPRAIN OR STRAIN TO BACK.	1	4	425
EMPLOYEE WAS CARRYING STD MTL CONT AND HE STRUCK AGAINST GROUND RESULTING IN BRUISE TO FOOT.	1	1	92
EMPLOYEE WAS CARRYING STD MTL CONT AND HE FELL FROM WET INCLINED GRASS RESULTING IN BRUISE TO MULTIPLE BODY PARTS.	1	10	348
EMPLOYEE WAS CARRYING PLASTIC BAG AND HE WAS HURT BY HANDLING PLASTIC BAG WHICH HAD PROTRUDING GLASS RESULTING IN CUT/PUNCTURE TO HAND.	1	0	69
EMPLOYEE WAS CARRYING STD MTL CONT AND HE SLIPPED STEPPING ON OBJ ON GROUND RESULTING IN SPRAIN OR STRAIN TO ABDOMEN.	1	0	20
EMPLOYEE WAS CARRYING STD MTL CONT AND HE OVEREXERTED SELF WITH STD MTL CONT WHICH WAS FULL AND BEING HNDLD W OTHER CONT RESULTING IN SPRAIN OR STRAIN TO BACK.	1	2	118
EMPLOYEE WAS CARRYING STD MTL CONT AND HE WAS STRUCK BY PLASTIC BAG WHICH HAD PROTRUDING WASTE RESULTING IN BRUISE TO FOOT.	1	3	239
EMPLOYEE WAS CARRYING STD MTL CONT AND HE SLIPPED STEPPING ON INCLINED GROUND RESULTING IN SPRAIN OR STRAIN TO ANKLE.	1	0	26
EMPLOYEE WAS CARRYING STD MTL CONT AND HE SLIPPED STEPPING ON INCLINED GROUND RESULTING IN SPRAIN OR STRAIN TO BACK.	1	0	94
EMPLOYEE WAS CARRYING TOTE BARREL AND HE SLIPPED STEPPING ON OBJ ON GROUND IN STEPPING DOWN RESULTING IN SPRAIN OR STRAIN TO ANKLE.	1	2	107

PROFILE	NO. INJ	DAYS	COSTS
EMPLOYEE WAS CARRYING STD MTL CONT AND HE MADE SUDDEN MOVEMENT IN STEPPING DOWN RESULTING IN SPRAIN OR STRAIN TO GROIN.	1	0	20
EMPLOYEE WAS CARRYING PLASTIC BAG AND HE SLIPPED STEPPING ON ICY PAVEMENT RESULTING IN SPRAIN OR STRAIN TO BACK.	1	13	721
EMPLOYEE WAS CARRYING STD MTL CONT AND HE STRUCK AGAINST SIDE OF VEH RESULTING IN BRUISE TO FOREHEAD.	1	0	69
EMPLOYEE WAS CARRYING STD MTL CONT AND HE SLIPPED WHILE ON PAVEMENT AND STRK AGNST EDGE OF HOPPER RESULTING IN BRUISE TO LEG.	1	1	49
EMPLOYEE WAS CARRYING TOTE BARREL AND HE FELL ON WET GRASS RESULTING IN SPRAIN OR STRAIN TO BACK.	1	4	208
EMPLOYEE WAS CARRYING TOTE BARREL AND HE FELL WHILE ON RUNNING BOARD AND STRK AGNST RUNNING BOARD RESULTING IN CUT/PUNCTURE TO LEG.	1	8	235
EMPLOYEE WAS CARRYING PLASTIC BAG AND HE WAS HURT BY HANDLING PLASTIC BAG WHICH HAD PROTRUDING WASTE RESULTING IN CUT/PUNCTURE TO HAND.	1	3	207
EMPLOYEE WAS CARRYING STD MTL CONT AND HE WAS STRUCK BY CONT HANDLED BY COWORKER RESULTING IN BRUISE TO THUMB.	1	0	15
EMPLOYEE WAS CARRYING STD MTL CONT AND HE SLIPPED STEPPING ON UNEVEN CURB RESULTING IN SPRAIN OR STRAIN TO MULTIPLE BODY PARTS.	1	2	100
EMPLOYEE WAS CARRYING STD MTL CONT AND HE STRUCK SELF WITH STD MTL CONT WHICH WAS EMPTY RESULTING IN BRUISE TO LEG.	1	3	96
EMPLOYEE WAS CARRYING STD MTL CONT AND HE SLIPPED WHILE ON CURB AND STRK AGNST STD MTL CONT RESULTING IN UNKNOWN TYPE OF INJURY TO HAND.	1	2	63
EMPLOYEE WAS CARRYING STD MTL CONT AND HE FELL WHILE ON BRICK WALKWAY AND STRK AGNST STD MTL CONT RESULTING IN FRACTURE TO FOOT.	1	2	150
EMPLOYEE WAS CARRYING STD MTL CONT AND HE SLIPPED STEPPING ON OBJ ON GROUND RESULTING IN SPRAIN OR STRAIN TO GROIN.	1	1	194
EMPLOYEE WAS CARRYING TOTE BARREL AND HE FELL ON PAVEMENT RESULTING IN BRUISE TO HIPS.	1	0	16
EMPLOYEE WAS CARRYING PLASTIC BAG AND HE SLIPPED WHILE ON SLIPPERY WASTE ON GROUND AND STRK AGNST STEP OF VEH RESULTING IN BRUISE TO KNEE.	1	2	81
EMPLOYEE WAS CARRYING STD MTL CONT AND HE SLIPPED STEPPING ON OBJ ON GROUND RESULTING IN SPRAIN OR STRAIN TO KNEE.	1	0	58
EMPLOYEE WAS CARRYING PLASTIC BAG AND HE WAS STRUCK BY VEH RESULTING IN FRACTURE TO LEG.	1	99	9947
EMPLOYEE WAS CARRYING TOTE BARREL AND HE OVEREXERTED SELF WITH TOTE BARREL WHICH WAS UNUSUALLY HEAVY AND UNUSUALLY LG RESULTING IN SPRAIN OR STRAIN TO SHOULDER.	1	3	37
EMPLOYEE WAS CARRYING STD MTL CONT AND HE FELL FROM STEP OF VEH ONTO GROUND RESULTING IN BRUISE TO BACK.	1	0	63
EMPLOYEE WAS CARRYING TOTE BARREL AND HE FELL WHILE ON ICY PAVEMENT AND STRK AGNST STEP OF VEH RESULTING IN BRUISE TO ELBOW.	1	2	125
EMPLOYEE WAS CARRYING STD MTL CONT AND HE SLIPPED STEPPING ON DEPRESSION RESULTING IN SPRAIN OR STRAIN TO KNEE.	1	1	83
EMPLOYEE WAS CARRYING TOTE BARREL AND HE SLIPPED STEPPING ON PAVEMENT RESULTING IN SPRAIN OR STRAIN TO KNEE.	1	1	248
EMPLOYEE WAS CARRYING STD MTL CONT AND HE STRUCK AGAINST OBJ PROTRUDING FROM GRND RESULTING IN FRACTURE TO TOES.	1	3	264
EMPLOYEE WAS CARRYING NSTD MTL CONT AND HE STRUCK SELF WITH NSTD MTL CONT WHICH WAS FULL AND HAD SLIPPED FROM HIS HANDS RESULTING IN BRUISE TO TOES.	1	6	20
EMPLOYEE WAS CARRYING PLASTIC BAG AND HE OVEREXERTED SELF WITH PLASTIC BAG WHICH WAS HVY (YARD CLIPPINGS) RESULTING IN SPRAIN OR STRAIN TO BACK.	1	0	182
EMPLOYEE WAS CARRYING OIL DRUM AND HE STRUCK SELF WITH OIL DRUM WHICH WAS UNUSUALLY HEAVY AND HAD SLIPPED FROM HIS HANDS RESULTING IN FRACTURE TO FOOT.	1	10	513
EMPLOYEE WAS CARRYING STD MTL CONT AND HE FELL WHILE ON WET GROUND AND STRK AGNST STD MTL CONT RESULTING IN SPRAIN OR STRAIN TO HIPS.	1	7	380
EMPLOYEE WAS CARRYING TOTE BARREL AND HE CONTACTED CAUSTIC OR TOXIC OTHER SUBSTANCE RESULTING IN INFECTION TO JAW.	1	7	319
EMPLOYEE WAS CARRYING STD MTL CONT AND HE FELL ON ICY BRICK WALKWAY RESULTING IN SPRAIN OR STRAIN TO CHEST#	1	27	832

PROFILE	NO. INJ	DAYS	COSTS
EMPLOYEE WAS CARRYING STD MTL CONT AND HE SLIPPED STEPPING ON WET GRASS RESULTING IN SPRAIN OR STRAIN TO ANKLE.	1	0	16
EMPLOYEE WAS CARRYING TOTE BARREL AND HE STRUCK AGAINST BACK OF VEH RESULTING IN BRUISE TO KNEE.	1	4	88
EMPLOYEE WAS CARRYING STD MTL CONT AND HE FELL ON ICY GROUND RESULTING IN BRUISE TO KNEE.	1	3	127
EMPLOYEE WAS CARRYING STD MTL CONT AND HE STRUCK AGAINST FENDER RESULTING IN BRUISE TO LEG.	1	2	93
EMPLOYEE WAS CARRYING TOTE BARREL AND HE FELL WHILE ON ICY OBJ ON GROUND AND STRK AGNST TOTE BARREL RESULTING IN SPRAIN OR STRAIN TO BACK.	1	1	65
EMPLOYEE WAS CARRYING PLASTIC BAG AND HE FELL ON INCLINED GROUND RESULTING IN SPRAIN OR STRAIN TO ANKLE.	1	0	20
EMPLOYEE WAS CARRYING TOTE BARREL AND HE SLIPPED STEPPING ON SLIPPERY CURB RESULTING IN SPRAIN OR STRAIN TO KNEE.	1	25	105
EMPLOYEE WAS CARRYING NSTD MTL CONT AND HE STEPPED ON NAIL RESULTING IN CUT/PUNCTURE TO FOOT.	1	5	161
EMPLOYEE WAS CARRYING TOTE BARREL AND HE FELL ON ICY PAVEMENT RESULTING IN FRACTURE TO HAND.	1	0	134
EMPLOYEE WAS CARRYING PLASTIC BAG AND HE SLIPPED STEPPING ON ICY GROUND RESULTING IN SPRAIN OR STRAIN TO FOOT.	1	4	212
EMPLOYEE WAS CARRYING TOTE BARREL AND HE SLIPPED STEPPING ON WET PAVEMENT IN STEPPING DOWN RESULTING IN SPRAIN OR STRAIN TO ANKLE.	1	9	273
EMPLOYEE WAS CARRYING STD MTL CONT AND HE SLIPPED STEPPING ON ICY GROUND RESULTING IN SPRAIN OR STRAIN TO FOOT.	1	3	210
EMPLOYEE WAS CARRYING PLASTIC BAG AND HE FELL ON ICY PAVEMENT RESULTING IN SPRAIN OR STRAIN TO BACK.	1	5	380
EMPLOYEE WAS CARRYING STD MTL CONT AND HE FELL ON ICY GROUND RESULTING IN FRACTURE TO LEG.	1	73	1863
EMPLOYEE WAS CARRYING TOTE BARREL AND HE FELL ON ICY GRASS RESULTING IN SPRAIN OR STRAIN TO FINGERS.	1	3	131
EMPLOYEE WAS CARRYING STD MTL CONT AND HE FELL ON ICY GROUND RESULTING IN CUT/PUNCTURE TO SCALP.	1	12	1211
EMPLOYEE WAS CARRYING TOTE BARREL AND HE FELL ON DEPRESSION RESULTING IN BRUISE TO HIPS.	1	0	20
EMPLOYEE WAS CARRYING TOTE BARREL AND HE STRUCK SELF WITH TOTE BARREL WHICH WAS FULL AND HAD SLIPPED FROM HIS HANDS RESULTING IN CUT/PUNCTURE TO SHOULDER.	1	3	20
EMPLOYEE WAS CARRYING STD MTL CONT AND HE SLIPPED STEPPING ON ICY GROUND RESULTING IN SPRAIN OR STRAIN TO BACK.	1	0	35
EMPLOYEE WAS CARRYING TOTE BARREL AND HE OVEREXERTED SELF WITH TOTE BARREL WHICH WAS FULL RESULTING IN SPRAIN OR STRAIN TO SHOULDER.	1	1	71
EMPLOYEE WAS CARRYING STD MTL CONT AND HE WAS STRUCK BY VEH RESULTING IN BRUISE TO TOES.	1	1	58
TOTAL	239	2086	91641

FIGURE 1-11

ALL USERS
DETAILED DESCRIPTION OF
PUSHING OR PULLING CONTAINER ACCIDENTS
OSHA RECORDABLE INJURIES ONLY

REPORTING PERIOD: DECEMBER 1975 - DECEMBER 1976

THIS PROFILE IS A FORMATTED SENTENCE CONSISTING OF ACTIVITY, ACCIDENT TYPE, NATURE OF INJURY AND PART OF BODY.

PROFILE	NO. INJ	DAYS	COSTS
EMPLOYEE WAS PUSHING OR PULLING BULK CONT (1-10 YD) AND HE STRUCK SELF WITH BULK CONT(1-10 YD) WHICH WAS EMPTY RESULTING IN BRUISE TO THUMB .	1	42	16
EMPLOYEE WAS PUSHING OR PULLING BULK CONT (1-10 YD) AND HE OVEREXERTED SELF WITH BULK CONT(1-10 YD) WHICH WAS FULL RESULTING IN SPRAIN OR STRAIN TO BACK .	5	64	1760
EMPLOYEE WAS PUSHING OR PULLING WHEELED CART AND HE FELL ON WET PAVEMENT RESULTING IN BRUISE TO BACK	1	2	198
EMPLOYEE WAS PUSHING OR PULLING BULK CONT (1-10 YD) AND HE OVEREXERTED SELF WITH BULK CONT(1-10 YD) WHICH WAS EMPTY RESULTING IN SPRAIN OR STRAIN TO GROIN .	1	5	275
EMPLOYEE WAS PUSHING OR PULLING BULK CONT (1-10 YD) AND HE STRUCK SELF WITH BULK CONT(1-10 YD) WHICH WAS UNUSUALLY HEAVY RESULTING IN BRUISE TO FOOT .	1	18	7738
EMPLOYEE WAS PUSHING OR PULLING WHEELED CART AND HE SLIPPED WHILE ON OBJ ON GROUND AND STRK AGNST WHEELED CART RESULTING IN BRUISE TO CHEST .	1	29	1291
EMPLOYEE WAS PUSHING OR PULLING BULK CONT (1-10 YD) AND HE OVEREXERTED SELF WITH BULK CONT(1-10 YD) WHICH WAS FULL AND BECAME STUCK RESULTING IN SPRAIN OR STRAIN TO BACK .	2	262	11142
EMPLOYEE WAS PUSHING OR PULLING WHEELED CART AND HE FELL ON ICY PAVEMENT RESULTING IN UNKNOWN TYPE OF INJURY TO UNK BODY PART .	1	8	426
EMPLOYEE WAS PUSHING OR PULLING BULK CONT (1-10 YD) AND HE MADE SUDDEN MOVEMENT IN CATCHING BULK CONT(1-10 YD) AND HNDLD WITH COWRKR RESULTING IN SPRAIN OR STRAIN TO SHOULDER .	1	15	968
EMPLOYEE WAS PUSHING OR PULLING WHEELED CART AND HE STRUCK SELF WITH WHEELED CART WHICH WAS FULL AND BECAME STUCK RESULTING IN BRUISE TO CHEST .	1	11	32
EMPLOYEE WAS PUSHING OR PULLING WHEELED CART AND HE FELL FROM ICY STAIRS RESULTING IN BRUISE TO SHOULDER .	1	5	265
EMPLOYEE WAS PUSHING OR PULLING WHEELED CART AND HE SLIPPED STEPPING ON ICY PAVEMENT RESULTING IN SPRAIN OR STRAIN TO ANKLE .	1	6	370
EMPLOYEE WAS PUSHING OR PULLING WHEELED CART AND HE STRUCK AGAINST WHEELED CART RESULTING IN BRUISE TO LEG .	1	4	193
EMPLOYEE WAS PUSHING OR PULLING BULK CONT (1-10 YD) AND HE STRUCK AGAINST BULK CONT(1-10 YD) RESULTING IN BRUISE TO WRIST .	1	0	57
EMPLOYEE WAS PUSHING OR PULLING BULK CONT (1-10 YD) AND HE STRUCK SELF WITH CONTAINER LID RESULTING IN BRUISE TO KNEE .	1	1	60
EMPLOYEE WAS PUSHING OR PULLING BULK CONT (1-10 YD) AND HE SLIPPED STEPPING ON OILY PAVEMENT RESULTING IN SPRAIN OR STRAIN TO BACK .	1	25	337
EMPLOYEE WAS PUSHING OR PULLING BULK CONT (1-10 YD) AND HE WAS CAUGHT BETWEEN BULK CONT & VEH RESULTING IN BRUISE TO HAND .	2	12	853
EMPLOYEE WAS PUSHING OR PULLING WHEELED CART AND HE FELL ON ICY GROUND RESULTING IN SPRAIN OR STRAIN TO ANKLE .	1	14	652
EMPLOYEE WAS PUSHING OR PULLING WHEELED CART AND HE FELL FROM ICY STAIRS RESULTING IN SPRAIN OR STRAIN TO BACK .	1	3	148
EMPLOYEE WAS PUSHING OR PULLING WHEELED CART AND HE FELL ON ICY PAVEMENT RESULTING IN BRUISE TO HIPS	1	8	484
EMPLOYEE WAS PUSHING OR PULLING BULK CONT (1-10 YD) AND HE OVEREXERTED SELF WITH BULK CONT(1-10 YD) WHICH WAS EMPTY RESULTING IN SPRAIN OR STRAIN TO BACK .	2	55	1865
EMPLOYEE WAS PUSHING OR PULLING WHEELED CART AND HE WAS STRUCK BY CONTAINER LID RESULTING IN FRACTURE TO FINGERS .	1	0	60
EMPLOYEE WAS PUSHING OR PULLING BULK CONT (1-10 YD) AND HE WAS CAUGHT BETWEEN BULK CONT & LID RESULTING IN BRUISE TO FINGERS .	1	0	29
EMPLOYEE WAS PUSHING OR PULLING STD MTL CONT AND HE SLIPPED STEPPING ON DEPRESSION RESULTING IN SPRAIN OR STRAIN TO ANKLE .	1	5	103
EMPLOYEE WAS PUSHING OR PULLING TOTE BARREL AND HE SLIPPED STEPPING ON ICY PAVEMENT RESULTING IN SPRAIN OR STRAIN TO ANKLE .	1	1	74

PROFILE	NO. INJ	DAYS	COSTS
EMPLOYEE WAS PUSHING OR PULLING BULK CONT (1-10 YD) AND HE OVEREXERTED SELF WITH BULK CONT(1-10 YD) WHICH WAS UNUSUALLY HEAVY AND BECAME STUCK RESULTING IN SPRAIN OR STRAIN TO BACK .	1	0	12
EMPLOYEE WAS PUSHING OR PULLING BULK CONT (1-10 YD) AND HE WAS CAUGHT BETWEEN TWO OBJECTS RESULTING IN BRUISE TO FINGERS .	1	0	43
EMPLOYEE WAS PUSHING OR PULLING WHEELED CART AND HE MADE SUDDEN MOVEMENT IN AVOIDING ANIMAL RESULTING IN SPRAIN OR STRAIN TO BACK .	1	33	101
EMPLOYEE WAS PUSHING OR PULLING BULK CONT (1-10 YD) AND HE WAS CAUGHT BETWEEN BULK CONT & WALL RESULTING IN CUT/PUNCTURE TO FINGERS .	1	0	42
EMPLOYEE WAS PUSHING OR PULLING STD MTL CONT AND HE OVEREXERTED SELF WITH STD MTL CONT WHICH WAS FULL RESULTING IN SPRAIN OR STRAIN TO BACK .	1	4	197
EMPLOYEE WAS PUSHING OR PULLING WHEELED CART AND HE STRUCK AGAINST POST RESULTING IN BRUISE TO NECK .	1	0	33
EMPLOYEE WAS PUSHING OR PULLING BULK CONT (1-10 YD) AND HE WAS CAUGHT BETWEEN BULK CONT & WALL RESULTING IN BRUISE TO HAND .	2	9	542
EMPLOYEE WAS PUSHING OR PULLING BULK CONT (1-10 YD) AND HE OVEREXERTED SELF WITH BULK CONT(1-10 YD) WHICH WAS FULL RESULTING IN SPRAIN OR STRAIN TO CHEST .	2	78	5554
EMPLOYEE WAS PUSHING OR PULLING CARDBD BOX AND HE FELL ON PAVEMENT RESULTING IN BRUISE TO CHEST .	1	23	1202
EMPLOYEE WAS PUSHING OR PULLING WHEELED CART AND HE SLIPPED STEPPING ON UNEVEN GROUND RESULTING IN SPRAIN OR STRAIN TO ANKLE .	1	12	529
EMPLOYEE WAS PUSHING OR PULLING WHEELED CART AND HE STRUCK SELF WITH WHEELED CART WHICH WAS UNUSUALLY HEAVY AND UNUSUALLY LG RESULTING IN SPRAIN OR STRAIN TO HAND .	1	0	32
EMPLOYEE WAS PUSHING OR PULLING STD MTL CONT AND HE SLIPPED STEPPING ON DEPRESSION RESULTING IN SPRAIN OR STRAIN TO KNEE .	2	2	129
EMPLOYEE WAS PUSHING OR PULLING BULK CONT (1-10 YD) AND HE WAS CAUGHT BETWEEN BULK CONT & WALL RESULTING IN BRUISE TO FINGERS .	1	0	41
EMPLOYEE WAS PUSHING OR PULLING BULK CONT (1-10 YD) AND HE WAS CAUGHT IN HANDLE OF BULK CONTAINER RESULTING IN BRUISE TO HAND .	1	1	99
EMPLOYEE WAS PUSHING OR PULLING TOTE BARREL AND HE SLIPPED WHILE ON PAVEMENT AND STRK AGNST BACK OF VEH RESULTING IN BRUISE TO ELBOW .	1	0	43
EMPLOYEE WAS PUSHING OR PULLING BULK CONT (1-10 YD) AND HE FELL ON SLIPPERY PAVEMENT AND HNDLD WITH COWRKR RESULTING IN SPRAIN OR STRAIN TO NECK .	1	18	601
EMPLOYEE WAS PUSHING OR PULLING STD MTL CONT AND HE OVEREXERTED SELF WITH STD MTL CONT WHICH WAS HVY (YARD CLIPPINGS) AND BEING HNDLD W OTHER CONT RESULTING IN SPRAIN OR STRAIN TO NECK .	1	0	20
EMPLOYEE WAS PUSHING OR PULLING BULK CONT (1-10 YD) AND HE OVEREXERTED SELF WITH BULK CONT(1-10 YD) RESULTING IN SPRAIN OR STRAIN TO GROIN .	1	6	204
EMPLOYEE WAS PUSHING OR PULLING STD MTL CONT AND HE STRUCK SELF WITH STD MTL CONT WHICH WAS HVY (YARD CLIPPINGS) AND BEING HNDLD W OTHER CONT RESULTING IN CUT/PUNCTURE TO TOES .	1	3	154
EMPLOYEE WAS PUSHING OR PULLING WHEELED CART AND HE OVEREXERTED SELF WITH WHEELED CART WHICH WAS UNUSUALLY HEAVY AND BECAME STUCK RESULTING IN SPRAIN OR STRAIN TO SHOULDER .	1	1	76
EMPLOYEE WAS PUSHING OR PULLING BULK CONT (1-10 YD) AND HE WAS CAUGHT BETWEEN BULK CONT & LID RESULTING IN BRUISE TO THUMB .	1	0	51
EMPLOYEE WAS PUSHING OR PULLING BULK CONT (1-10 YD) AND HE OVEREXERTED SELF WITH BULK CONT(1-10 YD) RESULTING IN SPRAIN OR STRAIN TO BACK .	1	209	11978
EMPLOYEE WAS PUSHING OR PULLING WHEELED CART AND HE FELL ON OBJ ON GROUND IN STEPPING DOWN RESULTING IN UNKNOWN TYPE OF INJURY TO HIPS .	1	5	68
EMPLOYEE WAS PUSHING OR PULLING BULK CONT (1-10 YD) AND HE STRUCK AGAINST BULK CONT(1-10 YD) RESULTING IN UNKNOWN TYPE OF INJURY TO FOOT .	1	7	52
EMPLOYEE WAS PUSHING OR PULLING OIL DRUM AND HE OVEREXERTED SELF WITH OIL DRUM WHICH WAS UNUSUALLY HEAVY AND SLIPPERY (WET) RESULTING IN SPRAIN OR STRAIN TO BACK .	1	4	235
EMPLOYEE WAS PUSHING OR PULLING BULK CONT (1-10 YD) AND HE OVEREXERTED SELF WITH BULK CONT(1-10 YD) WHICH WAS EMPTY RESULTING IN SPRAIN OR STRAIN TO KNEE .	1	3	201
EMPLOYEE WAS PUSHING OR PULLING BULK CONT (1-10 YD) AND HE WAS CAUGHT BETWEEN BULK CONT & VEH RESULTING IN FRACTURE TO FINGERS .	1	0	16
EMPLOYEE WAS PUSHING OR PULLING STD MTL CONT AND HE FELL ON OBJ ON GROUND RESULTING IN FRACTURE TO FOOT .	1	10	466

PROFILE	NO. INJ	DAYS	COSTS
EMPLOYEE WAS PUSHING OR PULLING BULK CONT (1-10 YD) AND HE OVEREXERTED SELF WITH BULK CONT(1-10 YD) WHICH WAS EMPTY AND BECAME STUCK RESULTING IN SPRAIN OR STRAIN TO WRIST .	1	4	179
EMPLOYEE WAS PUSHING OR PULLING BULK CONT (1-10 YD) AND HE OVEREXERTED SELF WITH BULK CONT(1-10 YD) WHICH WAS UNUSUALLY HEAVY AND HNDLD WITH COWRKR RESULTING IN SPRAIN OR STRAIN TO SHOULDER .	1	6	314
EMPLOYEE WAS PUSHING OR PULLING PLASTIC BAG AND HE FELL FROM VEHICLE ONTO PAVEMENT RESULTING IN CUT/PUNCTURE TO CHEEK .	1	0	20
EMPLOYEE WAS PUSHING OR PULLING BULK CONT (1-10 YD) AND HE STRUCK AGAINST BULK CONT(1-10 YD) RESULTING IN BRUISE TO FOOT .	1	0	44
EMPLOYEE WAS PUSHING OR PULLING BULK CONT (1-10 YD) AND HE STRUCK SELF WITH BULK CONT(1-10 YD) WHICH WAS EMPTY RESULTING IN BRUISE TO ANKLE .	1	0	20
EMPLOYEE WAS PUSHING OR PULLING OIL DRUM AND HE OVEREXERTED SELF WITH OIL DRUM WHICH WAS UNUSUALLY HEAVY AND BECAME STUCK RESULTING IN FRACTURE TO ELBOW .	1	16	842
EMPLOYEE WAS PUSHING OR PULLING STD MTL CONT AND HE SLIPPED STEPPING ON GROUND RESULTING IN SPRAIN OR STRAIN TO ANKLE .	1	0	26
EMPLOYEE WAS PUSHING OR PULLING BULK CONT (1-10 YD) AND HE WAS CAUGHT BETWEEN BULK CONT & VEH RESULTING IN FRACTURE TO WRIST .	1	31	1287
EMPLOYEE WAS PUSHING OR PULLING OIL DRUM AND HE OVEREXERTED SELF WITH OIL DRUM WHICH WAS UNUSUALLY HEAVY RESULTING IN SPRAIN OR STRAIN TO BACK .	1	2	278
EMPLOYEE WAS PUSHING OR PULLING BULK CONT (11-25 YD) AND HE OVEREXERTED SELF WITH BULK CONT(11-25 YD) WHICH WAS UNUSUALLY HEAVY AND BECAME STUCK RESULTING IN SPRAIN OR STRAIN TO MULTIPLE BODY PARTS	1	0	48
EMPLOYEE WAS PUSHING OR PULLING 300 GAL PLASTIC CONT AND HE OVEREXERTED SELF WITH 300 GAL PLASTIC CONT WHICH WAS EMPTY RESULTING IN SPRAIN OR STRAIN TO BACK .	3	38	1777
EMPLOYEE WAS PUSHING OR PULLING STD MTL CONT AND HE FELL FROM CURB ONTO PAVEMENT RESULTING IN SPRAIN OR STRAIN TO BACK .	1	2	109
EMPLOYEE WAS PUSHING OR PULLING BULK CONT (1-10 YD) AND HE WAS CAUGHT IN HANDLE OF BULK CONTAINER RESULTING IN CUT/PUNCTURE TO FINGERS .	1	25	1334
EMPLOYEE WAS PUSHING OR PULLING WHEELED CART AND HE STRUCK AGAINST GROUND RESULTING IN BRUISE TO TOES	1	4	227
EMPLOYEE WAS PUSHING OR PULLING STD MTL CONT AND HE SLIPPED STEPPING ON DEPRESSION RESULTING IN SPRAIN OR STRAIN TO ELBOW .	1	2	109
EMPLOYEE WAS PUSHING OR PULLING PLASTIC BAG AND HE SLIPPED FROM RUNNING BOARD ONTO PAVEMENT RESULTING IN SPRAIN OR STRAIN TO ANKLE .	1	0	72
EMPLOYEE WAS PUSHING OR PULLING BULK CONT (1-10 YD) AND HE OVEREXERTED SELF WITH BULK CONT(1-10 YD) WHICH WAS FULL RESULTING IN SPRAIN OR STRAIN TO SHOULDER .	2	30	1497
EMPLOYEE WAS PUSHING OR PULLING WHEELED CART AND HE STRUCK AGAINST STD MTL CONT RESULTING IN BRUISE TO KNEE .	1	3	177
EMPLOYEE WAS PUSHING OR PULLING WHEELED CART AND HE WAS INJURED IN UNK ACCIDENT RESULTING IN UNKNOWN TYPE OF INJURY TO FOOT .	1	2	238
EMPLOYEE WAS PUSHING OR PULLING BULK CONT (1-10 YD) AND HE WAS CAUGHT BETWEEN BULK CONT & VEH RESULTING IN MULTIPLE INJURIES TO MULTIPLE BODY PARTS .	1	106	3394
EMPLOYEE WAS PUSHING OR PULLING STD MTL CONT AND HE STRUCK SELF WITH STD MTL CONT WHICH WAS FULL RESULTING IN BRUISE TO TOES .	1	0	25
EMPLOYEE WAS PUSHING OR PULLING WHEELED CART AND HE STRUCK SELF WITH WHEELED CART WHICH WAS FULL RESULTING IN BRUISE TO TOES .	2	5	200
EMPLOYEE WAS PUSHING OR PULLING BULK CONT (1-10 YD) AND HE OVEREXERTED SELF WITH BULK CONT(1-10 YD) WHICH WAS UNUSUALLY HEAVY AND UNUSUALLY LG RESULTING IN SPRAIN OR STRAIN TO CHEST .	1	1	79
EMPLOYEE WAS PUSHING OR PULLING BULK CONT (1-10 YD) AND HE WAS CAUGHT BETWEEN BULK CONT & LID RESULTING IN CUT/PUNCTURE TO ARM .	1	0	73
EMPLOYEE WAS PUSHING OR PULLING BULK CONT (1-10 YD) AND HE OVEREXERTED SELF WITH BULK CONT(1-10 YD) WHICH WAS UNUSUALLY HEAVY AND HNDLD WITH COWRKR RESULTING IN SPRAIN OR STRAIN TO BACK .	2	22	1303
EMPLOYEE WAS PUSHING OR PULLING BULK CONT LID AND HE WAS CAUGHT BETWEEN BULK CONT & LID RESULTING IN SPRAIN OR STRAIN TO FINGERS .	1	1	92
EMPLOYEE WAS PUSHING OR PULLING WHEELED CART AND HE STRUCK AGAINST WHEELED CART WHICH WAS FULL RESULTING IN SPRAIN OR STRAIN TO FINGERS .	1	0	40
[illegible] HE HAS HURT BY HANDLING WHEELED CART WHICH HAD	[illegible]	[illegible]	[illegible]

PROFILE	NO. INJ	DAYS	COSTS
EMPLOYEE WAS PUSHING OR PULLING WHEELED CART AND HE FELL ON OBJ ON GROUND RESULTING IN MULTIPLE INJURIES TO MULTIPLE BODY PARTS .	1	1	195
EMPLOYEE WAS PUSHING OR PULLING BULK CONT (1-10 YD) AND HE WAS STRUCK BY BULK CONT(1-10 YD) WHICH WAS FULL RESULTING IN BRUISE TO CHEST .	1	0	60
EMPLOYEE WAS PUSHING OR PULLING OTHER CONT TYPE AND HE STRUCK SELF WITH OTHER CONT TYPE RESULTING IN SPRAIN OR STRAIN TO MULTIPLE BODY PARTS .	1	0	0
EMPLOYEE WAS PUSHING OR PULLING WHEELED CART AND HE STRUCK SELF WITH WHEELED CART WHICH WAS FULL RESULTING IN BRUISE TO FOOT .	1	3	248
EMPLOYEE WAS PUSHING OR PULLING WHEELED CART AND HE FELL ON OBJ PROTRUDING FROM GRND RESULTING IN MULTIPLE INJURIES TO MULTIPLE BODY PARTS .	1	0	51
EMPLOYEE WAS PUSHING OR PULLING STD MTL CONT AND HE OVEREXERTED SELF WITH STD MTL CONT WHICH WAS FULL AND BEING HNDLD W OTHER CONT RESULTING IN SPRAIN OR STRAIN TO HAND .	1	6	295
EMPLOYEE WAS PUSHING OR PULLING BULK CONT (1-10 YD) AND HE MADE SUDDEN MOVEMENT IN CATCHING BULK CONT(1-10 YD) WHICH WAS EMPTY AND HAD SLIPPED FROM HIS HANDS RESULTING IN SPRAIN OR STRAIN TO MULTI	1	4	257
EMPLOYEE WAS PUSHING OR PULLING WHEELED CART AND HE SLIPPED STEPPING ON DEPRESSION RESULTING IN SPRAIN OR STRAIN TO ANKLE .	1	3	16
EMPLOYEE WAS PUSHING OR PULLING STD MTL CONT AND HE OVEREXERTED SELF WITH STD MTL CONT WHICH WAS EMPTY RESULTING IN SPRAIN OR STRAIN TO BACK .	1	11	605
EMPLOYEE WAS PUSHING OR PULLING PLASTIC CAN AND HE OVEREXERTED SELF WITH PLASTIC CAN WHICH WAS EMPTY AND UNUSUALLY LG RESULTING IN SPRAIN OR STRAIN TO BACK .	1	0	68
EMPLOYEE WAS PUSHING OR PULLING WHEELED CART AND HE SLIPPED STEPPING ON OBJ ON GROUND RESULTING IN SPRAIN OR STRAIN TO ANKLE .	1	6	216
EMPLOYEE WAS PUSHING OR PULLING STD MTL CONT AND HE MADE SUDDEN MOVEMENT IN CATCHING PLASTIC CAN WHICH WAS EMPTY AND HAD SLIPPED FROM HIS HANDS RESULTING IN SPRAIN OR STRAIN TO LEG .	1	1	81
EMPLOYEE WAS PUSHING OR PULLING BULK CONT (1-10 YD) AND HE WAS CAUGHT BETWEEN BULK CONT & VEH (CONT WAS UNUSUALLY HVY) RESULTING IN CUT/PUNCTURE TO HAND .	1	0	49
EMPLOYEE WAS PUSHING OR PULLING BULK CONT (1-10 YD) AND HE WAS STRUCK BY VEH RESULTING IN AMPUTATION TO FINGERS .	1	15	398
EMPLOYEE WAS PUSHING OR PULLING WHEELED CART AND HE MADE SUDDEN MOVEMENT RESULTING IN SPRAIN OR STRAIN TO ANKLE .	1	3	192
EMPLOYEE WAS PUSHING OR PULLING 300 GAL PLASTIC CONT AND HE OVEREXERTED SELF WITH 300 GAL PLASTIC CONT WHICH WAS FULL RESULTING IN SPRAIN OR STRAIN TO BACK .	1	0	33
EMPLOYEE WAS PUSHING OR PULLING WHEELED CART AND HE FELL ON WET GRASS RESULTING IN BRUISE TO SHOULDER .	1	6	224
EMPLOYEE WAS PUSHING OR PULLING BULK CONT (1-10 YD) AND HE GOT WASTE PARTICLES IN EYE RESULTING IN EYE IRRITATION TO EYES .	1	0	109
EMPLOYEE WAS PUSHING OR PULLING BULK CONT (1-10 YD) AND HE WAS CAUGHT IN HANDLE OF BULK CONTAINER WHICH WAS FULL RESULTING IN BRUISE TO THUMB .	1	1	54
EMPLOYEE WAS PUSHING OR PULLING WHEELED CART AND HE SLIPPED STEPPING ON DEPRESSION RESULTING IN SPRAIN OR STRAIN TO KNEE .	1	0	96
EMPLOYEE WAS PUSHING OR PULLING BULK CONT (1-10 YD) AND HE OVEREXERTED SELF WITH BULK CONT(1-10 YD) WHICH WAS HVY (WATER FILLED) RESULTING IN SPRAIN OR STRAIN TO WRIST .	1	2	30
EMPLOYEE WAS PUSHING OR PULLING BULK CONT (1-10 YD) AND HE STRUCK SELF WITH BULK CONT(1-10 YD) WHICH WAS FULL RESULTING IN FRACTURE TO FOOT .	1	55	1536
EMPLOYEE WAS PUSHING OR PULLING WHEELED CART AND HE FELL ON WET GROUND RESULTING IN SPRAIN OR STRAIN TO FOOT .	1	25	918
EMPLOYEE WAS PUSHING OR PULLING TOTE BARREL AND HE WAS STRUCK BY TOTE BARREL WHICH WAS FULL RESULTING IN ABRASIONS TO NECK .	1	5	49
EMPLOYEE WAS PUSHING OR PULLING BULK CONT (1-10 YD) AND HE OVEREXERTED SELF WITH BULK CONT(1-10 YD) WHICH WAS FULL AND BECAME STUCK RESULTING IN OTHER TYPE OF INJURY TO CHEST .	1	47	4184
EMPLOYEE WAS PUSHING OR PULLING BULK CONT (1-10 YD) AND HE OVEREXERTED SELF WITH BULK CONT(1-10 YD) WHICH WAS FULL RESULTING IN HERNIA TO ABDOMEN .	1	0	20
EMPLOYEE WAS PUSHING OR PULLING BULK CONT (1-10 YD) AND HE OVEREXERTED SELF WITH BULK CONT(1-10 YD) WHICH WAS FULL AND STUCK OR FROZE TO GRND RESULTING IN SPRAIN OR STRAIN TO BACK .	1	91	993
EMPLOYEE WAS PUSHING OR PULLING BULK CONT (1-10 YD) AND HE STRUCK AGAINST POST RESULTING IN BRUISE TO ELBOW .	1	0	66

PROFILE	NO. INJ	DAYS	COSTS
EMPLOYEE WAS PUSHING OR PULLING BULK CONT (1-10 YD) AND HE WAS CAUGHT BETWEEN BULK CONT & WALL (CONT WAS UNUSUALLY HVY) RESULTING IN BRUISE TO HAND .	1	25	1575
EMPLOYEE WAS PUSHING OR PULLING WHEELED CART AND HE FELL FROM INCLINED GROUND RESULTING IN BRUISE TO HIPS .	1	1	44
EMPLOYEE WAS PUSHING OR PULLING BULK CONT (1-10 YD) AND HE STRUCK SELF WITH BULK CONT(1-10 YD) WHICH WAS FULL RESULTING IN BRUISE TO TOES .	1	0	16
EMPLOYEE WAS PUSHING OR PULLING NSTD MTL CONT AND HE OVEREXERTED SELF WITH NSTD MTL CONT WHICH WAS EMPTY AND BECAME STUCK RESULTING IN SPRAIN OR STRAIN TO BACK .	1	10	48
EMPLOYEE WAS PUSHING OR PULLING BULK CONT (1-10 YD) AND HE WAS CAUGHT BETWEEN BULK CONT & VEH RESULTING IN CUT/PUNCTURE TO HAND .	1	0	16
EMPLOYEE WAS PUSHING OR PULLING WHEELED CART AND HE FELL FROM INCLINED PAVEMENT RESULTING IN SPRAIN OR STRAIN TO SHOULDER .	1	9	327
EMPLOYEE WAS PUSHING OR PULLING BULK CONT (1-10 YD) AND HE OVEREXERTED SELF WITH BULK CONT(1-10 YD) WHICH WAS UNUSUALLY HEAVY AND UNUSUALLY LG RESULTING IN SPRAIN OR STRAIN TO LEG .	1	17	700
EMPLOYEE WAS PUSHING OR PULLING BULK CONT (1-10 YD) AND HE WAS CAUGHT BETWEEN BULK CONT & WALL (CONT WAS UNUSUALLY HVY) RESULTING IN CUT/PUNCTURE TO HAND .	1	20	1123
EMPLOYEE WAS PUSHING OR PULLING BULK CONT (1-10 YD) AND HE WAS CAUGHT BETWEEN BULK CONT & VEH RESULTING IN BRUISE TO THUMB .	1	5	20
EMPLOYEE WAS PUSHING OR PULLING WHEELED CART AND HE SLIPPED STEPPING ON ICY GROUND RESULTING IN SPRAIN OR STRAIN TO BACK .	1	7	468
EMPLOYEE WAS PUSHING OR PULLING BULK CONT (1-10 YD) AND HE WAS CAUGHT BETWEEN BULK CONT & WALL RESULTING IN BRUISE TO THUMB .	1	3	71
EMPLOYEE WAS PUSHING OR PULLING WHEELED CART AND HE OVEREXERTED SELF WITH WHEELED CART WHICH WAS UNUSUALLY HEAVY RESULTING IN SPRAIN OR STRAIN TO BACK .	1	19	349
EMPLOYEE WAS PUSHING OR PULLING WHEELED CART AND HE SLIPPED WHILE ON ICY GROUND AND STRK AGNST FENCE RESULTING IN BRUISE TO KNEE .	1	1	63
EMPLOYEE WAS PUSHING OR PULLING BULK CONT (1-10 YD) AND HE STRUCK SELF WITH BULK CONT(1-10 YD) WHICH WAS FULL RESULTING IN BRUISE TO FOOT .	1	1	68
EMPLOYEE WAS PUSHING OR PULLING BULK CONT (1-10 YD) AND HE OVEREXERTED SELF WITH BULK CONT(1-10 YD) WHICH WAS EMPTY RESULTING IN SPRAIN OR STRAIN TO LEG .	1	89	4828
EMPLOYEE WAS PUSHING OR PULLING WHEELED CART AND HE FELL ON DEPRESSION RESULTING IN SPRAIN OR STRAIN TO ANKLE .	1	4	88
EMPLOYEE WAS PUSHING OR PULLING CRATE AND HE MADE SUDDEN MOVEMENT RESULTING IN SPRAIN OR STRAIN TO BACK .	1	0	271
EMPLOYEE WAS PUSHING OR PULLING BULK CONT (1-10 YD) AND HE OVEREXERTED SELF WITH BULK CONT(1-10 YD) WHICH WAS FULL RESULTING IN SPRAIN OR STRAIN TO GROIN .	1	1	20
TOTAL	142	1825	87403

SECTION II

FOURTH QUARTER IRIS USER

INDUSTRY-WIDE DATA

The accidents received by IRIS from 81 users are covered in this section. FIGURE 2-1 gives operational background data on the IRIS users.

FREQUENCY, SEVERITY AND COSTS RATES

FIGURES 2-2 through 2-5 recap the frequency, severity and costs of injuries for this quarter:

- FIGURE 2-2: Summary of Injuries by Frequency, Severity and Costs. Compares the solid waste management industry with the national average for all industries.

- FIGURE 2-3: Comparison of Injury Rates and OSHA Days Lost for All Users. Compares the rates and days lost for the first four quarters of 1976, for each user, in user number order.

- FIGURE 2-4: Comparison of Direct Costs by Reporting Period for All Users. Compares the total costs and cost rates for the first four quarters of 1976, for each user, in user number order.

- FIGURE 2-5: Summary of Accident Factors for Selected Accident Characteristics with Highest Percent of OSHA Recordable Injuries, OSHA Days Lost and Direct Costs.

A few definitions of the terms used in the following FIGURES are:

- OSHA Recordable Injury. Defined by OSHA as a non-first aid injury.

- OSHA Incidence Rate. It is a measure of the frequency of injuries. The OSHA incidence rate is the number of OSHA recordable injuries per 200,000 hours of exposure. The base figure of "200,000 hours" is the standard figure used in OSHA statistics. It is roughly equivalent to 100 full-time employees working a year or 100 man-years (i.e., 100 employees working 40 hours per week for 50 weeks per year).

  OSHA incidence rates can be thought of as being roughly equivalent to the number of injuries that will occur to 100 employees during a year. Therefore, an OSHA incidence rate of 37 means that the organization is having 37 injuries per year for each 100 employees or that, on the average, 1 out of every 3 employees are being injured. The national average OSHA incidence rate for all industries has been around 10 for the last several years.

- Severity Rate. The severity rate is similar to the OSHA incidence rate, except that it reflects the number of OSHA days lost (i.e., workdays lost and light duty days), instead of the number of injuries, per 100 man-years worked. For example, a severity rate of 500 would mean roughly that an organization is losing 500 workdays for every 100 employees per year, or that on the average each employee is losing 5 days a year for on-the-job injuries.

- Direct Costs. Direct costs are normally those for which money was actually expended and include worker's compensation, medical expenses, and wage continuation benefits (e.g., injury leave). There are many indirect costs such as down time, replacement time, lost time by witnesses and supervisors, etc., which are not included in these figures. Indirect costs are estimated to be 5 times the direct costs in cities according to the National Safety Council.

- Average Direct Costs per OSHA Recordable Injury. An average direct cost per OSHA recordable injury of $500 means that on the average each OSHA recordable injury (i.e., a non-first aid case) is costing the organization $500!

- Direct Cost per Man-Year. It shows the cost per 2,000 hours or the average cost per year per employee. A direct cost per man-year of $200 would mean that on the average an organization's injuries are costing $200 per employee per year.

In reviewing these FIGURES, the data for the AVERAGE (shown on the FIGURES as AVG) is the most important because it summarizes the results for all users combined. After examining the AVERAGES, it is important to examine how great the range of rates between users is. Wide ranges are important because they show that it is possible to achieve lower rates of injury under given operating systems and safety programs.

FIGURE 2-1

DESCRIPTION OF USERS BY OPERATIONAL CHARACTERISTICS

User Number	M=Municipal P=Private	Geograph. Area	No. of Employees	Point of Collection: M=Mechanical A=Alley BY=Backyard w/o intermed. can BYT=Backyard-Tub BYC=Backyard-Cart CS=Curbside	Type of Shift	Type of Service Provided			
						Coll. Crew Size(s)			Disposal
						Resid.	Comm.	Resid. & Comm.	L=Landfill I=Incinerator T=Trans. Stn.
101	M	South	325	CS/A	T/F	4	4		L
103	M	Midwest	80	BY/CS/A	T	3			
109	M	Midwest	500	BY/BYC	F	4,3			
111	M	West	280	CS	T	2			L
113	P	Midwest	33	CS	T	1,2	1	2	
115	M	South	300	CS/A	T/F	3	1,2		L,I
125	M	South	650	CS	T		1	3	L,I
133	M	Northwest	86	CS/A/BY	T	2	1,2		L
136	M	South	140	M/A	F	3,1	1		L
140	M	South	844	CS	T	3			
146	M	South	295	CS/A	T	1,2,3	1,2		L,T
148	M	Northeast	267	CS	T			4	
149	M	Midwest	65	CS	T	2	2		
152	M	Midwest	63	CS	T	2			

OPERATIONAL CHARACTERISTICS CONTINUED

User Number	M=Municipal P=Private	Geograph. Area	No. of Employees	Point of Collection: M=Mechanical A=Alley BY=Backyard w/o intermed. can BYT=Backyard-Tub BYC=Backyard-Cart CS=Curbside	Type of Shift	Type of Service Provided			
						Coll. Crew Size(s)			Disposal
						Resid.	Comm.	Resid. & Comm.	L=Landfill I=Incinerat T=Trans. St
157	M	West	203	CS	T	2	2	2	L,T
161	M	Midwest	125	CS/A	T	3,1			L
170	M	South	1481	CS/BYC/A	T	1,2,3,4,5	2,3,4,5		T
171	M	Midwest	370	A	T/F	3			
172	M	West	700	M/CS/A	T/F	1,3,2			L
178	M	South	629	CS	T	3	2		L,I
179	M	Northeast	532	CS	T	3	3		I,T
181	M	Midwest	278	BY	T	4			L
182	M	Northeast	470	CS	T	3			L
183	M	Midwest	308	CS	T	3	2		
186	M	South	297	CS	T	3	3		L
191	M	South	177	CS/A	T/F	3	1		L
197	M	West	86	CS	T	2	2,1	2	
201	M	Northeast	120	CS	T	3			

OPERATIONAL CHARACTERISTICS CONTINUED

User Number	M=Municipal P=Private	Geograph. Area	No. of Employees	Point of Collection: M=Mechanical A=Alley BY=Backyard w/o intermed. can BYT=Backyard-Tub BYC=Backyard-Cart CS=Curbside	Type of Shift	Type of Service Provided			
						Coll. Crew Size(s)			Disposal
						Resid.	Comm.	Resid. & Comm.	L=Landfill I=Incinerator T=Trans. Stn.
204	M	West	52	CS/A/M	F	1,3	1,3		L
207	M	West	205	BYC	T	3	2		
210	M	West	15	CS	T			1,2	
211	M	West	40	CS/A	T	2	2		L
212	M	West	130	CS/A	F			2	
215	M	South	60	CS/BY/BYT	T/F	3	1		
217	M	South	820	CS/A/BY	F	1,2,3			L,T
221	M	West	210	CS	T	2			
226	M	South	87	CS	T	3	1,3		
235	M	South	125	BYT/A/CS	T	3	3		L
236	M	South	103	CS	T/F	3	1		L
237	M	Midwest	90	A/BYC	T/F			3	
242	M	South	101	CS/BY/BYT/A	T/F	3	3		L,T
244	M	West	30	BYT/BYC	T	2	1,2		

OPERATIONAL CHARACTERISTICS CONTINUED

User Number	M=Municipal P=Private	Geograph. Area	No. of Employees	Point of Collection: M=Mechanical A=Alley BY=Backyard w/o intermed. can BYT=Backyard-Tub BYC=Backyard-Cart CS=Curbside	Type of Shift	Type of Service Provided			
						Coll. Crew Size(s)			Disposal
						Resid.	Comm.	Resid. & Comm.	L=Landfill I=Incinerat T=Trans. St
260	M	West	168	CS/BYT/A/M	T	1,2	2,3		L
261	M	Midwest	8	CS/A	T	3			L
265	M	West	200	CS/BYT/BYC	T	1,2	2		L,T
272	M	Northeast	127	CS	T	3	3		L,I
275	M	Northeast	40	CS	T	3			
283	M	South	72	CS/A	T/F	2	3,1		L,T
285	M	Midwest	79	A/BYT/BYC	T	3			
286	M	West	8		F				L,T
292	M	Northwest	225	CS/A/BYT/BYC	F	1,3	2		L
295	M	South	179	CS/BY	T	4	2		L
296	M	West	43	CS/A/BY	F	1	2,1		
299	M	Northeast	113	CS	T	3	3		L
316	M	Northeast	475	CS/A/BYT	F	2,3	2,3		
318	M	Northwest	48	A/CS	F	3	3	3	L

OPERATIONAL CHARACTERISTICS CONTINUED

User Number	M=Municipal P=Private	Geograph. Area	No. of Employees	Point of Collection: M=Mechanical A=Alley BY=Backyard w/o intermed. can BYT=Backyard-Tub BYC=Backyard-Cart CS=Curbside	Type of Shift	Type of Service Provided			
						Coll. Crew Size(s)			Disposal
						Resid.	Comm.	Resid. & Comm.	L=Landfill I=Incinerator T=Trans. Stn.
323	M	Northeast	171	CS	T			3	L
324	P	Midwest	17	CS/A/BYT/BYC	T			1,2	
325	M	Northwest	45	CS/A	F	2,1	1,2,3		L
326	M	South	23	CS	T	3	3		L
327	M	South	140	CS	T	3	2,3		I,L
328	M	Midwest	33	CS	T/F	2,1	2		T
329	P	West	20	CS	T	3	2,1		
330	M	South	60	A/CS	F	3	3	3	L
331	M	Midwest	35	CS/A	T	3			
332	P	West	14	-	F		2		
333	M	Northeast	43	BY	T	3			
335	P	Northeast	24	CS	T	3	1		L
336	P	Midwest	51	-	T		2,1		
337	M	Northeast	405	CS	F	3			

OPERATIONAL CHARACTERISTICS CONTINUED

User Number	M=Municipal P=Private	Geograph. Area	No. of Employees	Point of Collection: M=Mechanical A=Alley BY=Backyard w/o intermed. can BYT=Backyard-Tub BYC=Backyard-Cart CS=Curbside	Type of Shift	Type of Service Provided: Coll. Crew Size(s)			Disposal
						Resid.	Comm.	Resid. & Comm.	L=Landfill I=Incinerator T=Trans. Stn.
338	M	Northeast	405	CS	F	3			
339	M	Northeast	405	CS	F	3			
340	M	Midwest	318	CS	T	3			
341	M	West	35	CS/A	T	2	2,1		
342	M	Midwest	25	CS	T	1	2		L
343	M	West	17	CS	F	1			
344	M	Midwest	40	CS/A	F	2,3	1		
345	M	Midwest	38	-	F				L,I,T
346	P	Midwest	70	A/CS	T	2		2	L
347	M	Northeast	60	CS	T			4	T
348	M	West	35	CS/A	T	1,2,3			
349	P	Midwest	40	CS/BYT	T	2	1		
350	M	West	57	CS	T	2	2	2	
351	M	West	10	CS/A	T	2	1	3	
352	M	Midwest	52	CS/A	F	3	3		

OPERATIONAL CHARACTERISTICS CONTINUED

User Number	M=Municipal P=Private	Geograph. Area	No. of Employees	Point of Collection: M=Mechanical A=Alley BY=Backyard w/o intermed. can BYT=Backyard-Tub BYC=Backyard-Cart CS=Curbside	Type of Shift	Type of Service Provided			
						Coll. Crew Size(s)			Disposal
						Resid.	Comm.	Resid. & Comm.	L=Landfill I=Incinerator T=Trans. Stn.
353	M	Midwest	20	CS	F			3	
354	M	Northeast	30	BYT	T	3			
355	P	Midwest	70	CS/BY	T	2	1,2		
356	P	Northeast	21	-	F		1		
358	M	South	18	BYC/CS	T	3	2		
359	P	Midwest	71	CS	T	2	1,2		
360	P	Northwest	30	-					L,T
361	M	West	44	-	F				L,T
362	M	Northeast	76	CS	T	4,3			
363	M	South	75	CS/A/BY	T	1,4	1		

FIGURE 2-2

SUMMARY OF INJURIES
BY FREQUENCY, SEVERITY AND COSTS

FREQUENCY

- There were 1,547 cases reported by 81 of the 84 IRIS users on-line: 348 first aid cases, 498 nonfatal cases without lost workdays, 695 lost workday cases and 6 permanent disability cases. Total man-hours for this quarter were 7,223,094.

- The AVERAGE OSHA incidence rate was 33 for this quarter, the lowest of all previous quarters. This means that one out of every three solid waste industry employees will experience a non-first aid injury a year. The national rate for all industries was 10.4. Therefore, the solid waste industry is experiencing more than three times as many injuries as the average industry.

- IRIS users ranged in frequency rates from User No. 210 which was experiencing 1.5 injuries per employee per year, to User No. 362 which was experiencing 4 injuries per 100 employees per year.

SEVERITY (Days lost given are not final. These figures reflect what was received from IRIS users by July 1, 1977 and may be gross underestimates. For example, in the months since the publication of the first quarter Accident Trends, the OSHA severity rate has increased from 269 to 463, and not all cases are final yet.)

- So far, 699 cases this quarter incurred 8,713 workdays lost and light duty days.

- 45% of the total cases resulted in workdays lost and/or light duty days. The national average for all industries is 33%. This means that the solid waste industry has more than 1 1/3 times as many lost workday injuries as the average industry.

- The AVERAGE OSHA severity rate was 242. This means that on the average, each employee is losing 2.4 days per year for injuries. One user's rate was as high as 42 days lost per year per employee; several are losing zero days a year per employee.

- On the AVERAGE, each lost workday case resulted in 12.46 workdays lost so far.

DIRECT COSTS (Costs given are not final. These figures reflect what was received from IRIS users by July 1, 1977, and may be gross underestimates. For example, first quarter's AVERAGE cost per OSHA recordable injury has gone up from $296 to $509.)

- Total direct costs so far for injuries that occurred during the fourth quarter was $487,615.

- The AVERAGE cost per OSHA recordable injury was $405.

- The AVERAGE cost per man-year was $135. This means that the average solid waste injury (non-first aid) cost $135 per full-time employee per year so far.

FIGURE 2-3

COMPARISON OF INJURY RATES AND OSHA DAYS LOST FOR ALL USERS

USER	OSHA INCIDENCE RATE QTR 1	QTR 2	QTR 3	QTR 4	SEVERITY RATE QTR 1	QTR 2	QTR 3	QTR 4	AVERAGE OSHA DAYS LOST QTR 1	QTR 2	QTR 3	QTR 4
101	12	34	45	20	48	394	102	121	6.50	27.00	8.33	17.57
103				109				375				3.44
109	36	49	51	21	194	176	199	124	8.03	8.15	7.65	6.27
111	68	77	81	54	1112	1203	882	221	23.73	22.05	14.93	10.87
113				28				0				0.00
115				29				152				11.00
125	31	35	42	20	743	375	523	343	30.06	13.03	15.45	24.94
133				19				131				10.50
136	15	0	3		577	0	24		38.60	0.00	8.00	
140	47	55			525	680			15.37	16.56		
146	26	21	34	36	381	138	143	250	47.17	20.60	9.82	12.93
148		35	5	18		224	0	61		12.86	0.00	9.25
149				125				886				10.22
152				87				355				8.14
157				16				90				6.29
161	13	42	63	54	0	34	99	38	0.00	1.60	5.00	1.11
170				23				171				9.58
171	44	63	57	47	209	230	294	590	9.58	5.96	10.53	18.42
172	50	56	69	38	475	1087	444	362	14.56	26.81	11.23	20.85
178				18				106				11.07
179			38	30			429	314			22.60	17.55
181	44	50	67	51	369	148	264	427	11.48	4.26	6.89	13.04
182				12				22				4.60
183				38				161				6.31
186	19	24	25	23	105	279	102	108	12.25	22.00	8.22	7.36
191	57	46	94	47	188	150	232	505	4.00	5.11	4.62	15.73
197			39	32			324	592			10.00	23.25
201				8				245				61.00
204	79	136	48	30	342	84	55	273	13.00	8.00	7.00	12.00
207	79	97	73	98	582	253	628	351	10.30	5.35	13.19	8.53
210	104	0	49	148	467	0	1347	3142	9.00	0.00	27.50	29.80
211	9	68	34	63	539	281	94	211	62.00	4.71	2.75	3.86
212	79	44			759	488			9.65	11.00		

USER	OSHA INCIDENCE RATE QTR 1	QTR 2	QTR 3	QTR 4	SEVERITY RATE QTR 1	QTR 2	QTR 3	QTR 4	AVERAGE OSHA DAYS LOST QTR 1	QTR 2	QTR 3	QTR 4
215	0	0	22	0	0	0	419	0	0.00	0.00	19.00	0.00
217		44	60	43		195	154	34		11.22	12.38	4.19
221			33	78			147	1022			4.50	13.07
226				18				0				0.00
235	66	56	40	36	330	0	0	51	6.00	0.00	0.00	2.80
236	89	105	74	57	1492	671	250	51	18.53	8.86	6.00	1.78
237	45	34	47	36	105	153	94	129	3.50	6.40	3.14	4.83
242	4	0	0	5	100	0	0	18	25.00	0.00	0.00	3.50
244	135	57	42	56	247	199	184	183	2.75	3.50	6.50	6.50
260	68	54	104	117	759	519	1190	1296	19.42	16.20	17.64	14.26
261	48	0	0	48	145	0	0	429	3.00	0.00	0.00	9.00
265	34	47	65	70	249	305	407	522	8.64	7.80	7.30	10.55
272	17	15	19	40	368	11	99	150	32.00	1.50	6.50	6.83
275		182	59	93		1944	79	384		10.67	2.67	9.25
283	34	50	51	19	0	134	118	10	0.00	8.00	3.50	2.00
285	20	0			39	0			2.00	0.00		
286	0	0	0	39	0	0	0	0	0.00	0.00	0.00	0.00
292	9	11	7	5	814	20	15	7	86.00	4.33	2.75	3.00
295	26	20	20	29	97	20	102	212	4.75	2.00	15.50	13.33
296	56	76	58	55	1398	2943	221	1765	25.00	51.50	5.75	32.17
299				45				158				28.00
316		80	60	29		907	426	300		17.05	12.82	16.32
318			79	46			2458	346			31.09	7.57
323				8				54				13.00
324		79	71	46		0	236	23		0.00	3.33	1.00
325		62	47	46		196	351	771		4.75	13.00	23.60
326			0	24			0	48			0.00	2.00
328				0				0				0.00
329		106	17	50		106	102	17		2.00	6.00	1.00
330		73	71	44		245	79	850		5.00	2.50	23.40
331			0	0			0	0			0.00	0.00
333			101	99			50	1219			2.00	37.00
336				23				62				2.67

USER	OSHA INCIDENCE RATE QTR 1	QTR 2	QTR 3	QTR 4	SEVERITY RATE QTR 1	QTR 2	QTR 3	QTR 4	AVERAGE OSHA DAYS LOST QTR 1	QTR 2	QTR 3	QTR 4
337			67	38			624	262			9.29	6.92
338			48	25			376	191			7.78	7.57
339			36	36			184	202			5.12	5.67
340				29				296				28.37
341			117	58			2073	737			19.50	12.75
343			76	75			151	50			2.00	2.00
344				11				80				7.00
345				10				627				65.00
346				29				95				3.25
347				20				20				3.00
348				34				192				8.50
349				50				125				10.00
350				42				96				3.00
351				51				101				2.00
353				35				122				7.00
354				129				388				9.00
355				33				16				1.50
358				88				4230				145.00
359				57				447				12.43
361				23				0				0.00
362				4				305				72.00
363				10				0				0.00
AVG.	40	46	50	33	463	404	315	242	16.65	14.40	11.46	12.43

FIGURE 2-4

COMPARISON OF DIRECT COSTS BY REPORTING PERIOD FOR ALL USERS

USER	TOTAL INJURY COSTS QTR 1	QTR 2	QTR 3	QTR 4	AVG. COST PER OSHA REC. INJ. QTR 1	QTR 2	QTR 3	QTR 4	AVERAGE COST PER MAN YEAR QTR 1	QTR 2	QTR 3	QTR 4
101	4,210	25,973	5,735	4,271	386	864	130	213	51	291	58	42
103				3,627				203				247
109	13,513	12,994	19,851	12,834	312	213	275	351	112	104	139	77
111	53,238	41,227	29,520	11,963	1,108	749	467	278	755	576	378	151
113				102				51				14
115				6,336				301				87
125	48,010	25,734	43,854	28,740	787	357	461	598	247	125	195	119
133				638				212				39
136	1,970	0	205		394	0	205		58	0	6	
140	39,842	69,843			711	688			331	382		
146	12,010	5,442	3,060	8,171	632	340	117	291	161	72	40	105
148		3,577	110	2,092		255	36	190		89	1	34
149				2,952				227				284
152				3,056				218				190
157				2,957				369				60
161	135	815	1,526	663	18	80	93	47	5	34	60	25
170				21,541				315				72
171	3,582	6,376	9,486	20,018	148	163	243	571	65	102	139	267
172	26,708	42,735	27,413	71,487	387	547	274	1,211	193	304	190	459
178				7,087				262				48
179			8,499	20,983			424	437			161	129
181	11,510	5,081	9,833	15,322	391	153	209	425	176	76	139	218
182				1,032				82				9
183				7,505				312				119
186	1,295	8,021	2,950	3,370	143	471	163	198	27	113	40	45
191	1,475	1,685	2,101	3,702	86	120	70	231	49	54	65	108
197			2,654	43,237			442	8,647			172	2,750
201				2,571				1,285				103
204	2,481	517	300	2,142	275	39	50	535	217	54	23	162
207	4,523	9,636	12,908	6,786	141	235	403	150	111	228	292	147
210	1,445	0	3,218	9,079	361	0	1,609	1,297	374	0	788	1,914
211	794	1,987	600	1,687	758	248	145	195	68	168	51	131
212	14,297	7,138			621	549			488	243		

USER	TOTAL INJURY COSTS QTR 1	QTR 2	QTR 3	QTR 4	AVG. COST PER OSHA REC. INJ. QTR 1	QTR 2	QTR 3	QTR 4	AVERAGE COST PER MAN YEAR QTR 1	QTR 2	QTR 3	QTR 4
215	0	0	4,846	0	0	0	1,615	0	0	0	356	0
217		86,968	29,978	9,707		948	211	86		418	128	37
221			1,045	14,110			253	491			85	393
226				60				20				3
235	1,185	725	240	886	197	48	21	88	130	26	8	31
236	12,768	9,550	8,223	1,442	608	329	357	80	541	344	263	45
237	604	1,813	1,583	1,925	201	259	143	218	90	86	67	85
242	6,877	0	0	278	6,877	0	0	139	274	0	0	7
244	706	904	748	962	117	226	249	240	158	128	105	135
260	2,317	5,620	8,797	17,683	110	330	258	442	75	180	269	518
261	159	0	0	960	159	0	0	960	76	0	0	457
265	2,820	8,216	14,019	9,500	214	455	519	306	74	213	339	213
272	1,861	109	1,224	1,424	620	27	244	129	107	4	46	52
275		1,437	272	1,297		239	45	144		436	26	134
283	119	1,346	1,890	173	59	147	210	43	20	75	106	8
285	61	0			61	0			12	0		
286	0	0	0	80	0	0	0	80	0	0	0	30
292	7,327	894	483	376	3,663	127	96	94	346	13	6	4
295	911	578	1,172	5,257	177	96	195	477	46	19	38	139
296	1,982	16,786	1,256	10,471	991	2,098	209	1,745	554	1,598	120	957
299				2,010				125				56
316		35,939	24,016	17,902		598	338	511		478	204	149
318			14,061	4,218			1,278	587			1,010	275
323				893				205				18
324		92	491	62		30	163	31		24	115	14
325		2,159	4,736	5,069		359	676	716		222	319	331
326			0	91			0	91			0	22
328				0				0				0
329		153	378	194		66	338	64		81	64	32
330		1,053	480	2,822		351	53	470		257	37	205
331			0	0			0	0			0	0
333			223	2,044			55	340			56	336
336				60				20				4

USER	TOTAL INJURY COSTS QTR 1	QTR 2	QTR 3	QTR 4	AVG. COST PER OSHA REC. INJ. QTR 1	QTR 2	QTR 3	QTR 4	AVERAGE COST PER MAN YEAR QTR 1	QTR 2	QTR 3	QTR 4
337			11,442	7,664			817	638			549	241
338			6,431	4,968			714	709			345	178
339			3,152	6,265			394	522			141	186
340				10,803				491				140
341			9,864	4,644			896	572			1,048	335
343			341	453			170	151			128	113
344				318				318				36
345				1,670				1,670				161
346				619				154				45
347				331				110				22
348				1,172				390				132
349				729				182				91
350				393				98				41
351				64				64				32
353				238				119				41
354				1,193				198				256
355				165				27				9
358				3,953				1,317				1,153
359				2,061				187				105
361				40				20				4
362				1,934				1,934				81
363				31				31				2
AVG.	280,735	443,123	335,214	487,615	509	485	313	405	204	223	155	135

FIGURE 2-5

SUMMARY OF ACCIDENT FACTORS FOR SELECTED ACCIDENT CHARACTERISTICS WITH HIGHEST PERCENT OF OSHA RECORDABLE INJURIES OSHA DAYS LOST AND DIRECT COSTS

Type of Characteristic	Factors With The:		
	Highest % of OSHA Recordable Injuries	Highest % of OSHA Days Lost	Highest % of Direct Costs
Activity	Lifting or dumping container - 36% Carrying container - 8% Getting off equipment - 8%	Lifting or dumping container - 29% Riding on equipment - 11% Getting off equipment - 11%	Lifting or dumping container - 23% Riding on equipment - 16% Opening equipment part - 10%
Accident Type	Overexertion involving container - 17% Slip on same level - 7% Fall on same level - 6%	Overexertion involving container - 22% Vehicle accident - 16% Slip on same level - 9%	Vehicle Accident - 21% Overexertion involving container - 17% Struck by vehicle part - 10%
Accident Site	On collection route at back of truck - 31% On collection route at curb - 15% On collection route in customer's yard-11%	On collection route at back of truck - 23% On collection route at curb - 12% On collection route in customer's yard-11%	On collection route at back of truck - 20% On collection route on step of vehicle - 13% At landfill next to veh. at dump site - 9%
Nature of injury	Sprain or strain - 41% Bruise - 22% Cut or puncture - 17%	Sprain or strain - 51% Bruise - 14% Fracture - 14%	Sprain or strain - 40% Bruise - 14% Fracture - 11%
Part of Body	Back - 19% Eyes - 9% Leg - 8%	Back - 28% Leg - 10% Knee - 8%	Back - 22% Leg - 17% Multiple body parts - 12%

Accident Trends
1st Quarter 1977

IRIS

EXHIBIT 6

ACCIDENT TRENDS

IN THE SOLID WASTE MANAGEMENT INDUSTRY

CAUGHT IN PACKER ACCIDENTS

QUARTER: JANUARY 1 TO MARCH 31, 1977

DEVELOPED BY SAFETY SCIENCES, DIVISION OF WSA INC.,
FOR THE U.S. ENVIRONMENTAL PROTECTION AGENCY
OFFICE OF SOLID WASTE MANAGEMENT PROGRAMS
UNDER CONTRACT NO. 68-03-0231

safety sciences Division of WSA Inc., 11772 Sorrento Valley Road
San Diego, CA 92121 (714) 755-9359 & 452-1010

Accident Trends in the Solid Waste Management Industry is developed quarterly using data from IRIS (the Injury Reporting and Information System for Solid Waste Management). Accident Trends is designed to summarize and discuss the data from all IRIS users and to provide data and conclusions which affect the industry as a whole. A companion volume, the QSMR (Quarterly Safety Management Report), is developed individually for each IRIS user who reported injuries during the quarter. Each QSMR concentrates only on the injuries of the individual IRIS user for which it is prepared.

IRIS is currently made up of 82 users. All possible care is taken to insure date quality. The nature of the data and the reports, however, precludes complete accuracy. Not all cases are closed by the end of the quarter. These accidents continue to be monitored. Occasionally, full lost time and cost data is not available. Consequently, the totals for these categories may be underestimates. A concerted effort is made to correct the lost time and cost figures and improve IRIS collection methods. The recommendations and countermeasures presented are suggestions that must be evaluated in terms of individual user's needs.

The purpose of this and other IRIS publications is to disseminate new ideas and alternative methods in the solid waste field. IRIS serves as a clearinghouse in this regard, but does not promote or endorse any method or product. Implementation of QSMR suggestions should be done only after careful evaluation by each user and at each user's discretion.

ACCIDENT TRENDS

IN THE SOLID WASTE MANAGEMENT INDUSTRY
CAUGHT IN PACKER ACCIDENTS

QUARTER: January 1 through March 31, 1977

TABLE OF CONTENTS

		Page
INTRODUCTION		iv
I.	DISCUSSION OF CAUGHT IN PACKER ACCIDENTS AND PREVENTION METHODS	1-1
	1. Equipment Modifications and the ANSI Z245.1-1975 Standard	1-7
	1.1 Point of Operation Protection	1-7
	1.2 Packing Cycle Controls	1-10
	1.3 Riding Steps and Handholds	1-10
	2. Employee Training and Supervision	1-14
	2.1 Proper Riding Stance	1-15
	2.2 Operating the Packing Mechanism Controls Safely	1-15
	2.3 Packer Operator Responsibility	1-16
	2.4 Supervision	1-16
	3. Altering Operational Procedures	1-16
	4. Conclusion	1-17
II.	FIRST QUARTER IRIS USER INDUSTRY-WIDE DATA	2-1

LIST OF FIGURES

		Page
FIGURE 1-1	"Caught in Packer" Accident Descriptions	1-3
FIGURE 1-2	Two Handed Packing Mechanism Controls	1-9
FIGURE 1-3	Retractable Riding Step	1-12
FIGURE 1-4	Bi-Level Riding Step	1-13
FIGURE 1-5	Hopper Step and Guard	1-14
FIGURE 2-1	Description of Users by Operational Characteristics	2-4
FIGURE 2-2	Summary of Injuries by Frequency, Severity, and Costs	2-11
FIGURE 2-3	Comparison of Injury Rates and OSHA Days Lost for All Users	2-13
FIGURE 2-4	Comparison of Direct Costs by Reporting Period for All Users	2-19
FIGURE 2-5	Summary of Accident Factors for Selected Accident Characteristics with Highest Percent of OSHA Recordable Injuries, Workdays Lost and Direct Costs	2-25

INTRODUCTION

This is the Accident Trends report for the First quarter of 1977 (January 1 to March 31). This report is divided into two sections, a discussion of the special feature topic, caught in packer accidents, their preventative measures and a summary of the data for the quarter. Section I includes detailed descriptions of the caught in packer accidents since the instigation of IRIS in December 1975, but Section II relates only the rates and figures applicable to the First quarter of 1977.

Of the 82 IRIS users on-line first quarter, 80 users reported 1,595 injuries. Since the injury rates are based on man-hours of exposure, they reflect the various start-up periods of the IRIS users.

The time lost and direct costs shown on the FIGURES were provided as of June 1, the "closing date" for receiving data for the first quarter. Any cases where the time lost or direct cost data are incomplete are being monitored for updating.

SECTION I

DISCUSSION OF CAUGHT IN PACKER ACCIDENTS AND PREVENTION METHODS

Caught in packer accidents are one of the most traumatic accidents that can occur to solid waste workers. They are low in frequency, but because of their high severity (including one fatality) an in-depth study of them can help IRIS users to understand why they are occurring and how they can be prevented.

The IRIS injury reporting period of 12/75 through 3/77 was chosen, since most of the cases would have been closed by now. The closing date of the time lost and direct cost data was the end of 1977. A total of 36 "caught in packer" accidents (.7%) occurred during this reporting period. These accidents ranged in severity from cuts and bruises to amputations and resulted in:

- A total of 1,326 days lost (4%) and $147,907 in direct costs (8%). The percentages were derived from using total collection crew injuries.
- An OSHA incidence rate of .36, or 3.6 employees out of 1,000 full time collection employees a year will sustain a caught in packer accident that is OSHA recordable (19,567,739 man-hours of exposure).
- An OSHA severity rate of 13.6. This means that the users are losing an average of .14 days lost per employee on the payroll due to injuries from employees being caught by the packer blade.
- Direct costs per OSHA recordable injury of $4,108.
- Direct costs per man-year of $15,011. This means that each user is spending an average of $15 per employee on the payroll due to caught in packer accidents.
- Seven amputations, eight fractures and one fatality.

FIGURE 1-1 gives the actual descriptions of the accidents. With these particular accidents, often times the employee was performing two activities at the same time, which is difficult to code in a manner that would describe the accident completely. For instance, the injured employee may have been "riding on the step" as well as "pushing waste back into the hopper," but only one activity category can be used. Therefore, the actual injury decriptions are more revealing.

Upon examining the 36 "caught in packer" accident descriptions, several notable accident causal factors can be singled out in order of highest to lowest frequency. Note that some accidents fall in more than one category:

- Improperly placed hand or foot - 13
- Riding or standing on step - 10
- Operating packing mechanism - 8
- Catching and pushing back falling waste - 7
- Interaction with coworker - 5
- Clearing jammed packer blade - 4
- Dumping into hopper at the time - 4
- Pushing wrong control button - 1

FIGURE 1-1

"CAUGHT IN PACKER" ACCIDENT DESCRIPTIONS

1. Employee was walking behind packer with his hand on packer sill with packer operating. Packer blade caught two fingers.

2. Dumping at the Landfill--cardboard lodged in hopper. He reached in to dislodge it, and bar fell down on his hand.

3. Standing on dock--kicking refuse into hopper. Packer starting to move, caught foot, and fractured toe.

4. Employee was activating packer and speaking to fellow employee. He forgot his hand was still on truck, and packer blade struck his index finger.

5. Employee activated the hopper to check to see if it was functioning correctly when he unconsciously put his hand on the inside of the hopper. As the hopper came down, it cut him on the middle finger.

6. Cleaning trash out from behind compacter blade. Engine was started by coworker, and he was crushed behind blade of side loader. Fatality.

7. As hopper was coming down, employee got his skin caught between hopper and edge of blade. Employee was standing on rear step.

8. Standing with foot on bucket rail when hopper came down on it and fractured foot. Unknown distraction.

9. Caught finger in blade; mashed finger. Had hand resting back of truck while hopper was operating.

10. Employee was riding on rear step, and had his hand on the packer blade. Apparently the blade shifted, and it pinched his finger.

11. Employee was riding on vehicle, had foot on edge of the hopper, and packer was operating. Blade cut off his left big toe. Driver had left power take-off on. Employee can operate packer from rear while riding when power take-off is on.

12. Employee was getting a plastic bag which was stuck in the hopper. When he was pulling the bag, he accidently pushed the wrong button and caught his left arm and hand in the hopper.

13. Employee was putting brush into the hopper when the blade came down, cutting his left arm and hand.

14. Riding on rear step, and while they were moving, they were cycling the hopper. His hand got pinched between packer blade and hopper.

15. Got hand caught in hopper. Unknown activity.

16. "Dogs" fell and amputated his finger. (Thinks it was caught in the hopper because hopper was not operating smoothly). Hopper was jittering around. He had his hand where it shouldn't be. He was operating the hopper system after dumping garbage.

17. Hopper was stuck. Tried to free it with hand, and when he did, the hopper moved and cut his finger.

18. Packing truck--trying to keep garbage from falling from bucket. Caught right arm in packer blade and cut it.

19. Employee riding on truck--sweeper blade had been activated--truck made left turn, employee lost his balance. As he attempted to regain his balance, he launched back into the truck. His foot was placed on hopper, and blade fractured his foot.

20. Employee activated sweep blade on packing unit and a box got caught in the hopper between blade and bed. He backed blade up and pushed box in so blade would clear. His right hand was on packing lever, and while shoving the box in with left hand, the sweep blade activated, catching his left hand between the blade and bed. Amputation.

21. While dumping container, employee hit return button on packer with knee. Hopper went back the other way catching glove under hopper inspection cover. He had stitches for severe cut--they felt gloves might be factor as to why it wasn't amputated. This is a Shu-pak.

22. Pushing garbage into hopper with left hand. Right hand slipped off lever, and left hand was caught between hopper and blade. Garbage was falling out. Fracture.

23. Standing on back of truck and packer blade caught his big toe mashing it.

24. Employee had his foot on hopper of truck. Another man started the packer, and it caught his right foot and broke it. Was just standing with foot on truck.

25. Employee went to grab garbage which was falling out of hopper. As he did so, his finger got caught in packer blade, resulting in the tips of two fingers being cut off.

26. Truck made right turn out of south end of alley (truck steps drag at this point). Employee was aware of this, and to assure himself that his foot would not accidently be caught between truck step and pavement, he put it on the edge of the hopper. He was running packing unit through its cycle at the same time. He misjudged the location of his foot, and the packing blade caught the end of his left foot. Employee did not take advantage of safety devices. He ran packing unit through cycle without allowing it to stop. The safety arm was jammed.

27. Truck was packing. He was holding the tailgate, and the packer blade caught his finger on right hand.

28. Employee was pushing trash into hopper with hand when coworker activated packer. Resulted in contusion of hand.

29. Rearranging boxes in packer when packer was operating. Fractured arm.

30. Employee was on bed of truck--going to bathroom. Driver activated the packer and came around and found employee caught between blade and door.

31. Putting boxes into truck. Packer blade, caught right arm.

32. The packer was packing and the blade came over and caught his finger, employee was pushing waste back into hopper at the time of the accident.

33. Employee was pushing garbage into hopper, to keep it from falling out--when his finger was caught between the hopper and sill.

34. Employee was making repairs to packing systems. His foot slipped and bucket came down on hand, cutting finger.

35. Curb trash fell in front of packer blade. Employee reached in front of blade to get some paper, and blade caught his right arm on return stroke, resulting in loss of right arm from elbow down.

36. Employee had oil on shoes. When driver stopped suddenly, employee on step slipped. His foot went up in the air, and packer blade was coming down. It cut his foot.

As the highest causal factor category indicates, many of the accidents occur when employees unconsciously place their hand or foot in the way of the operating packer blade. Because of the serious nature of the injuries involved, the operating packer panel has been the target of many equipment safeguards as well as intensive training methods. No personal protective equipment is of aid, but an operational procedures change (e.g., not allowing "packing on the run") would help reduce the occurrence of this accident type.

The following discussion is divided into these three types of preventative measures to aid in the reduction of caught in packer accidents: equipment modifications and the ANSI Z245.1-1975 standard, employee training and supervision, and altering operational procedures.

1. EQUIPMENT MODIFICATIONS AND THE ANSI Z245.1-1975 STANDARD

Three types of equipment modifications can be installed to provide protection against caught in packer accidents, point-of-operation protection, altering controls, and providing more comfortable riding steps and handholds. The ANSI Z245.1-1975 standard entitled, "Safety Requirements for Refuse Collection and Compaction Equipment" addresses these areas. It must be remembered that this is a consensus standard developed by solid waste safety professionals for the industry. It, however, does not address the chassis nor the maximum hopper sill height. The standard applies to mobile equipment manufactured after March 1978. Implementation of the ANSI Z245.1-1975 standard is voluntary, but it has been cited in court cases and can be adopted into federal and state standards (see the June 1977 and March 1978 issues of the "IRIS News").

1.1 Point-of-Operation Protection

For point-of-operation protection, the ANSI Z245.1-1975 standard states:

> *7.3.6 Point-of-Operation Protection. The employee shall be protected from pinch points during the packing cycle by one of the following means:*
>
> *(1) Deadman control from the initiation of the packing cycle until the packer panel clears the loading sill.* (Deadman controls are such that the control must be continually depressed in order to function. Problems associated with this control is that the

workers jam the control in place.)

(2) An elevating hopper that raises any pinch point during the packing cycle at least 5 feet above the working surface. (An example of this is the Heil rear loader truck.)

(3) A movable guard that is interlocked with the packing cycle so that it is in place before the packer panel is within 6 inches of the pinch point. The movable barrier shall be designed so that it shall not be hazardous in itself. (An example of this was the safety door which came down whenever the packer panel was operated. Problems associated with this was the safety door malfunctioning and coming down on the employee as he was dumping into the hopper.)

(4) A control that provides an interrupted cycle. Actuation of the control shall cause the packer panel to stop not less than 6 inches or more than 16 inches from the pinch point created by the packer panel as it moves past the hopper loading sill. The control shall require reactivation to complete the packing cycle by a subsequent motion by the operator.

(5) Other means, at least as effective as those given in 7.3.6(1) through 7.3.6(4), that will protect an employee from the pinch point.

Combinations of the points-of-operation protection given above can be used. For instance, the deadman controls can be used on a truck that has an elevating hopper.

In addition to these points-of operation protection given in the standard, one IRIS user, the City of San Diego, has installed a manually operated second control on their rear loading trucks that have a packer blade that sweeps 360° (FIGURE 1-2). When the second control is not pushed before the sweep blade comes down to the pinch point, the two metal bars protruding into the side of the hopper stops the blade. Therefore, two hands are required to complete the packing cycle.

Another two-handed control that San Diego has installed on their rear loaders with push button controls is a separate push button that has to be depressed along with the start button in order for the packer panel to function (FIGURE 1-2). All controls are deadman controls.

Two handed deadman controls have an advantage over only deadman controls in that the packing mechanism operator

is not able to reach out unconsciously when he sees waste falling out of the hopper and try to push it back in. With only deadman controls, the employee is still able to reach out with his left hand, as his right hand keeps the controls depressed. At least 8 of the caught in packer accidents involved the injured employee operating the packing controls as he was at the same time pushing protruding waste back in or clearing jammed waste.

FIGURE 1-2

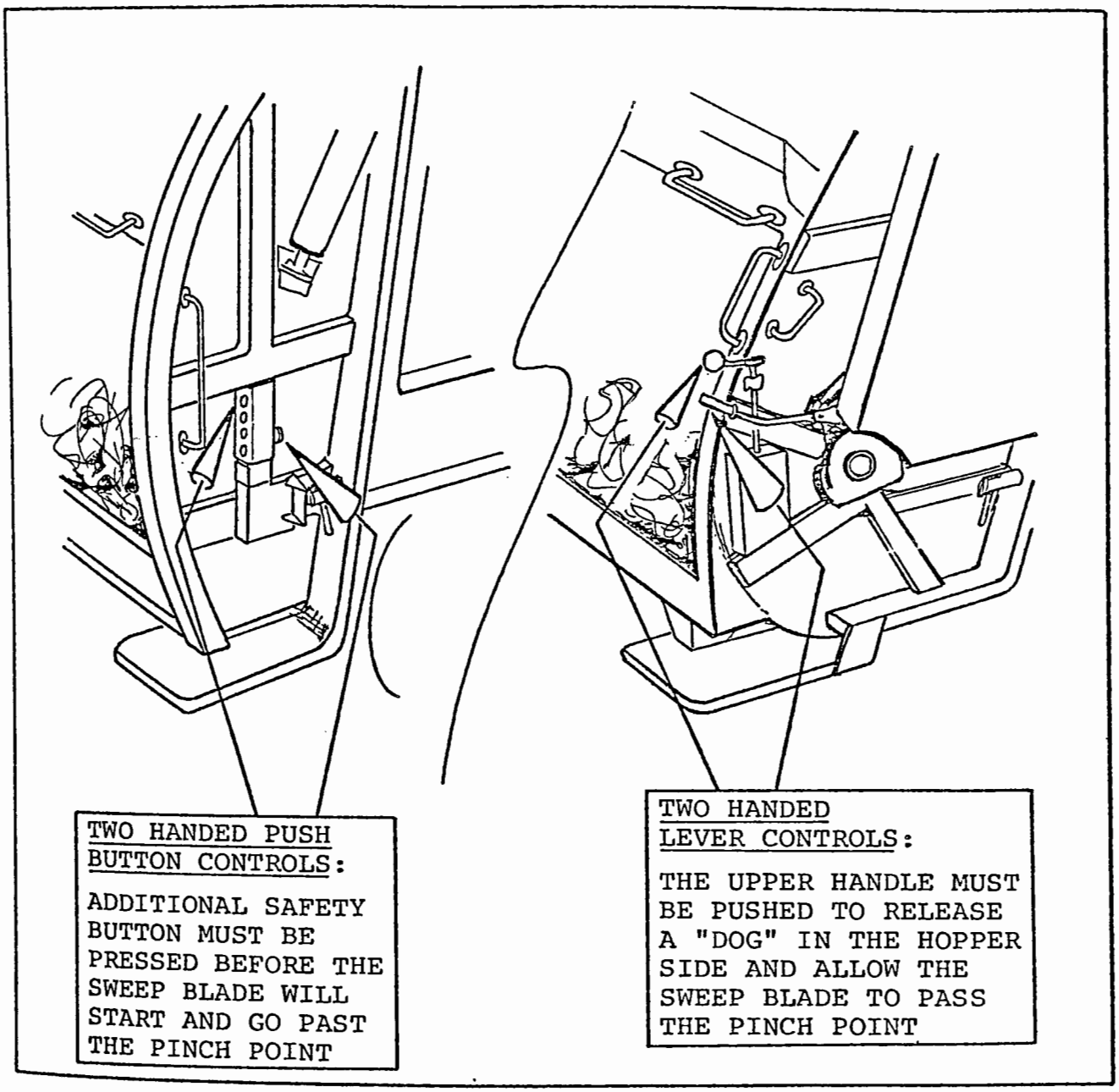

TWO HANDED PACKING MECHANISM CONTROLS

1.2 Packing Cycle Controls

For specifications on the packing cycle controls, the ANSI Z245.1-1975 standard states:

> *7.3.3 Controls*
>
> *7.3.3.1 Each control shall be conspicuously labeled as to its function.*
>
> *7.3.3.2 Controls (for example, for operating the packer panel, tailgate, point-of-operation guards, ejector panel, container hoists) shall be designed and located to prevent unintentional activation.* (Unintentional activation caused one accident.)
>
> *7.3.3.2.1 Start buttons shall be recessed or located to prevent unintentional activation.* (One user installed a guard around the start buttons of their side loaders such that they became recessed.)
>
> *7.3.3.2.2 Stop button controls shall be red, distinguishable from all other controls by size and color, and not be recessed.*
>
> *7.3.3.3 Packing cycle controls shall be located so that the operator has a view of the loading sill, In order to minimize exposure to normal traffic, the packing cycle operating controls shall be located on the side of the vehicle opposite the normal traffic side of the vehicle. Two sets of packing cycle controls shall not be permitted except for additional dock height controls located on the same side and above the packing cycle controls.*
>
> *7.3.3.5 For emergencies a means of stopping and moving the packer panel away from the pinch point (prior to the pinch point) shall be provided. Emergency stop controls shall be red, distinctly labeled as to function, and not be recessed.*

1.3 Riding Steps and Handholds

With nearly a third of the caught in packer accidents occurring as employees were riding or standing on the rear steps, an examination of why these occurred is necessary. It is particularly important to understand why the employees were unconsciously placing their hands on the sides of the hopper or their feet on the hopper sill. Apparently, they were attempting to attain a more comfortable riding position. Recognition of this fact has led many users to modify their riding steps and grab handles. A more comfortable riding position can also reduce other riding related accidents, e.g., falling off the step when the vehicle made a sudden start, stop, or swerve.

The ANSI Z245.1-1975 standard does identify certain criteria for the step and handhold design:

7.3.7 Riding Steps and Grab Handles

7.3.7.1 The surface and edges of steps shall have a slip-resistant surface. They shall be self-cleaning or be protected against the accumulation of mud, snow, and ice.

7.3.7.2 Steps shall be designed to carry a uniformly distributed load of not less than 1,000 pounds.

7.3.7.3 If steps are provided, they shall be mounted not more than 22 inches above the road surface.

7.3.7.4 Steps shall have a depth of at least 8 inches and shall provide a minimum of 220 square inches of riding surface area. (The dimensions of the riding step is important in providing the employee with a firm riding stance, rather than a precariously small and narrow riding step.)

7.3.7.5 Grab handles shall be provided in conjunction with riding steps and be located so as to provide the employee with a safe and comfortable riding stance. Each grab handle shall be capable of withstanding a pull of at least 500 pounds. (Several users have modified their grab handles' location and design to provide added riding comfort by providing more than one grab handle and providing vertical instead of horizontal grab handles. If the grab handles are comfortable, employees are less likely to place their hands around the edge of the hopper.)

Modifications to grab handles should be done in conjunction with improved step design modifications to provide total riding comfort. Several users have installed unique step designs on their collection vehicles to provide maximum riding surface and comfort. One user installed a "retractable" riding step which can be pulled out or pushed in by the use of a pin that holds it in place (FIGURE 1-3). It lengthens the step. However, several problems are associated with the retractable step. Employees will leave the step in the elongated position rather than push it in and out. This can result in the step being bent upwards as the vehicle dips from going over bumps, causing increased maintenance, as well as resulting in unsafe riding steps. In addition, when the step is left in the nonretracted position, the employees can bang their shins against it when attempting to go around it to get to the hopper to dump.

FIGURE 1-3

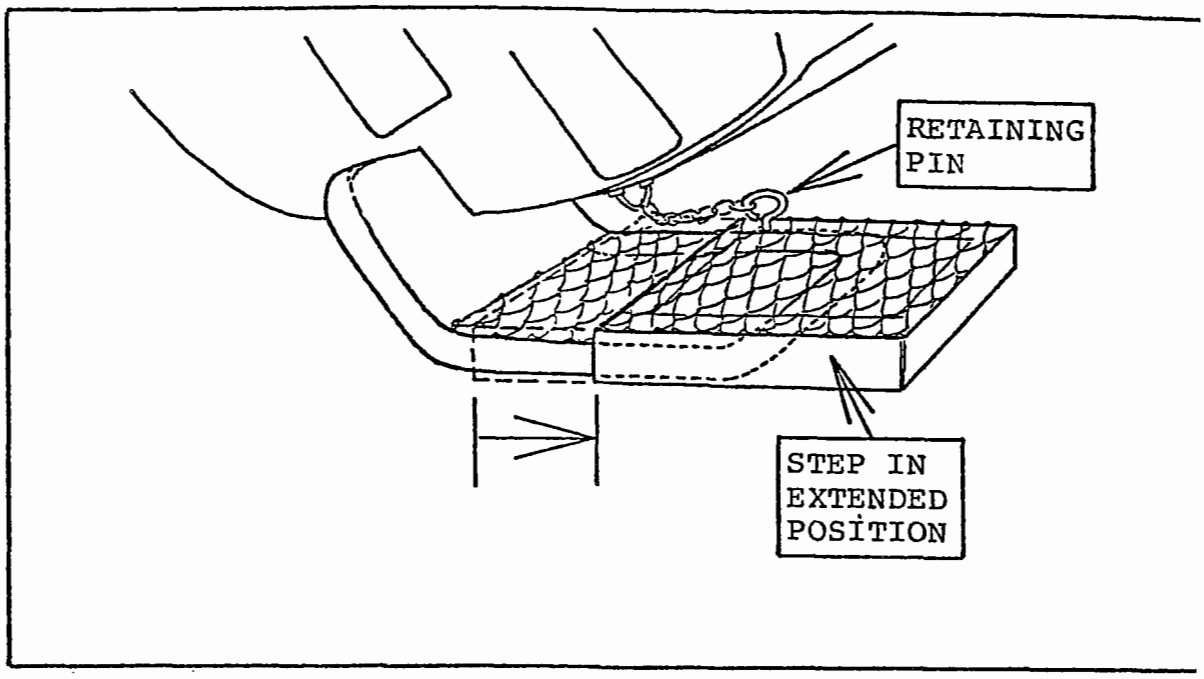

RETRACTABLE RIDING STEP

Another user provides bi-level steps on their trucks (FIGURE 1-4) that allow the rider to place one foot higher than the other. The theory behind this is that when one foot is raised higher, it relieves pressure from the back, making the employee more comfortable. This may be a reason why employees will unconsciously place one foot on the hopper sill, which is generally higher than the riding step. In addition, if not enough riding step surface is provided for the employee to place both feet firmly on the step, he may resort to placing one foot on the hopper sill.

FIGURE 1-4

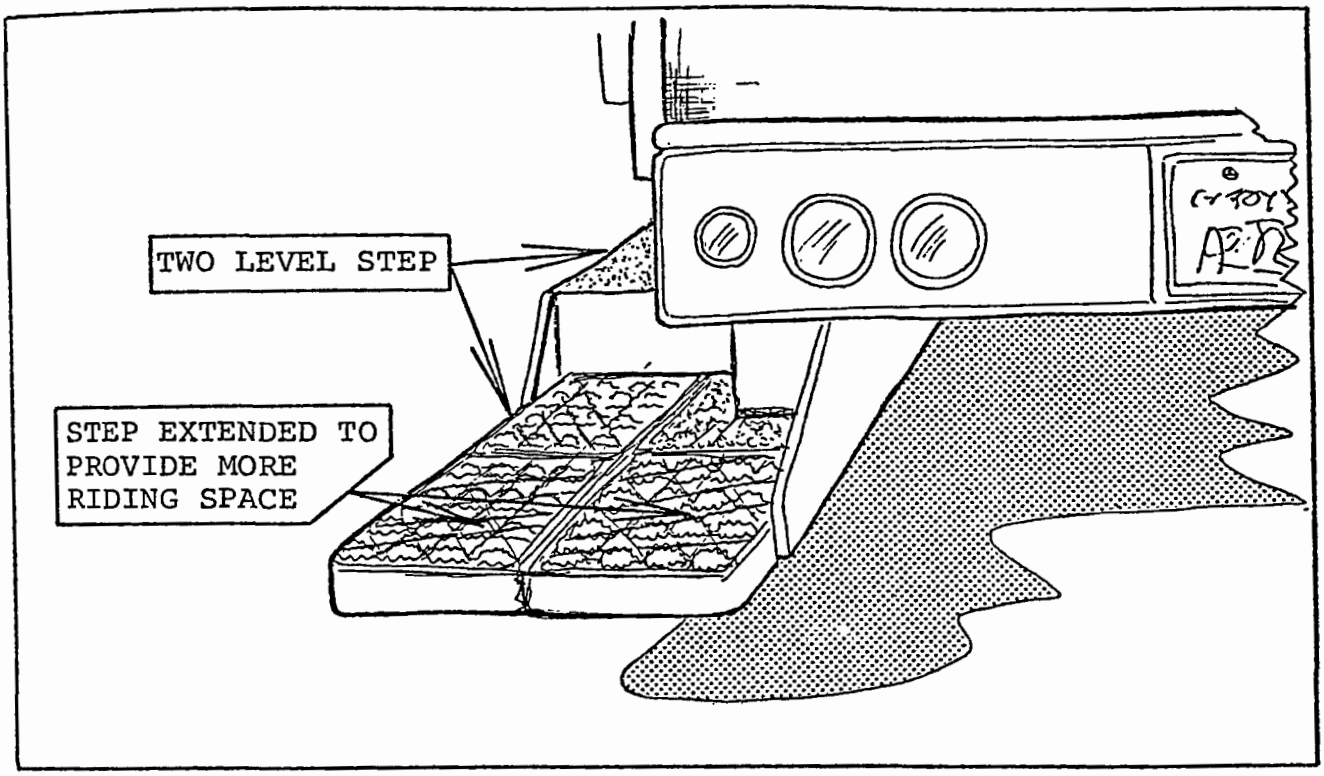

BI-LEVEL RIDING STEP

The third step modification also provides a bi-level riding step, except that the second level step is not connected to the side step (FIGURE 1-5). This step design takes advantage of the fact that their employees prefer placing one foot on the hopper sill and protects against their feet being caught by the packer blade by the added installation of a hopper guard next to the second step. It was only installed on the left side of the hopper, away from the pick up side to reduce problems of the employees hitting against it when they are dumping into the hopper.

FIGURE 1-5

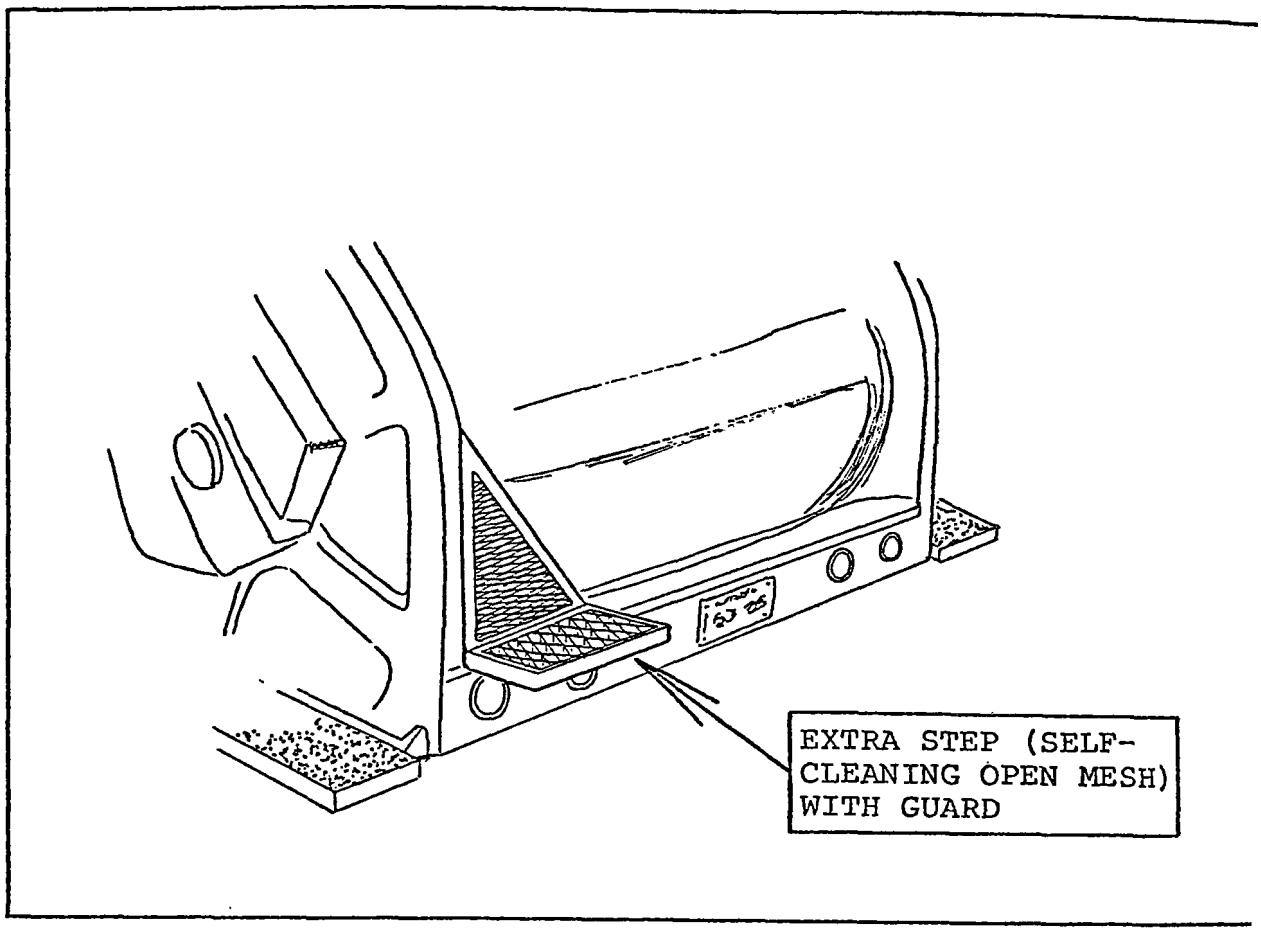

HOPPER STEP AND GUARD

An important safety concern with riding step modifications that allow the employee to ride further back on the vehicle (nearer to the hopper opening) is that employees may be more likely to place one foot on the hopper. And if a user allows packing on the run, sustaining caught in packer accidents is very likely.

2. EMPLOYEE TRAINING AND SUPERVISION

The "state of the art" of safety engineering on collection vehicles is not such that it can eliminate all caught in packer accidents. Therefore, training the employees to increase their safety awareness and to use the equipment properly goes in conjunction with providing safer equipment.

Three areas of training are indicated by the types of caught in packer accidents occurring:

- Proper riding stance,
- Operating the packing mechanism controls safely, and
- Packer operator responsibility

Written rules developed and utilized by an establishment to present these safety awareness issues are much more effective than verbal instructions. In addition, employee training should include more than just "on the job" training. The newly hired employee or the retraining of employees should ensure that the employees understand completely how to operate the equipment as well as the safe procedures to follow before they are allowed to go on the route.

2.1 Proper Riding Stance

1. Maintain firm grip on grab handles. Do not use edge of hopper to hold.
2. Place feet firmly on the riding step with feet slightly apart for better balance. Do not place foot on hopper sill.
3. Do not place any body parts within the sweeping range of the packer panel, including getting hands pinched along the side of the hopper and elbows being struck by an elevating hopper.

2.2 Operating the Packing Mechanism Controls Safely

1. Make sure no one is in front of the hopper before operating the packer.
2. On right sided controls, operate with the left hand. (This makes it less likely for the operator to reach out to push back falling waste or to unjam the packer panel without stopping the packing mechanism first.)
3. Avert head from hopper. (Reduce objects getting in eyes and being struck by objects ejected from the hopper.)

4. Keep fellow employees away from hopper when it is in operation.

2.3 Packer Operator Responsibility

As outlined above, not only should the packer operator know and utilize safe operating procedures, he should also be responsible for the safety of his fellow employees. He should not allow his coworkers to stand near the hopper, as accidents have happened from a coworker pushing back waste, avoiding objects (e.g., boards, branches) swinging around in the hopper, or was unaware of its activation.

2.4 Supervision

Employee adherence to safety rules cannot be achieved from mere training. Reinforcement of the safety rules is most effective through on the job supervision. Supervision, however, need not have connotations of "policing" the routes. Supervision can mean simply spotting incorrect behavior and showing the employee the safer procedure, but where repeated violations of the safety rules occur, particularly when they might result in a caught in packer accident, a means of enforcing the safety rules must be available to the supervisor.

Punitive measures are frequently used to enforce adherence to safety rules. These can range from written reprimands, to suspension of pay for a day, to reviewing job performance after repeated violations, to denying of raises, to firing from the job. On the other hand, users also employ reward systems for safe behavior. Sometimes this method proves more effective. Incentives can involve contests for the safest crew or individual prizes, such as cash awards for so many hours worked without injury. Incentives do not necessarily require monetary awards since acknowledgement of good work through pins or safety certificates provide welcomed recognition.

3. ALTERING OPERATIONAL PROCEDURES

The one operational procedure that was implicated as contributing to caught in packer accidents was allowing packing on the run. This is allowed by many users, in spite of the safety hazards, to increase productivity. However, solid waste safety professionals who recognize the hazard potential of this procedure come out strongly against packing on the run. (In fact, the solid waste safety manual being developed by SAFETY SCIENCES under funding by the National Science Foundation oppose this activity.)

Accidents that occur to employees who are allowed to pack the refuse as the vehicle is in motion and the employee(s) is on the riding step include not only hands and feet caught by the packer panel but also the employee being thrown into the packer blade pinch point when the vehicle swerved.

4. CONCLUSION

Any countermeasure being considered for implementation must be weighed for accident reduction potential (cost effectiveness) as well as monitored to ascertain effectiveness. Sometimes altering procedures or equipment can produce unexpected results that may require re-evaluation of the countermeasure. Countermeasures given in this IRIS report may or may not be suited to an organization's operation and therefore, need to be evaluated individually.

SECTION II

FIRST QUARTER IRIS USER

INDUSTRY-WIDE DATA

The accidents received by IRIS from 82 users are covered in this section. FIGURE 2-1 gives operational background data on the IRIS users.

FREQUENCY, SEVERITY AND COSTS RATES

FIGURES 2-2 through 2-5 recap the frequency, severity and costs of injuries for this quarter:

- FIGURE 2-2: Summary of Injuries by Frequency, Severity and Costs. Compares the solid waste management industry with the national average for all industries.

- FIGURE 2-3: Comparison of Injury Rates and OSHA Days Lost for All Users. Compares the rates and days lost for the first quarter of 1977, for each user, in user number order.

- FIGURE 2-4: Comparison of Direct Costs by Reporting Period for All Users. Compares the total costs and cost rates for the first quarter of 1977, for each user, in user number order.

- FIGURE 2-5: Summary of Accident Factors for Selected Accident Characteristics with Highest Percent of OSHA Recordable Injuries, OSHA Days Lost and Direct Costs.

A few definitions of the terms used in the following FIGURES are:

- OSHA Recordable Injury. Defined by OSHA as a non-first aid injury.

- OSHA Incidence Rate. It is a measure of the frequency of injuries. The OSHA incidence rate is the number of OSHA recordable injuries per 200,000 hours of exposure. The base figure of

"200,000 hours" is the standard figure used in OSHA statistics. It is roughly equivalent to 100 full-time employees working a year or 100 man-years (i.e., 100 employees working 40 hours per week for 50 weeks per year).

OSHA incidence rates can be thought of as being roughly equivalent to the number of injuries that will occur to 100 employees during a year. Therefore, an OSHA incidence rate of 37 means that the organization is having 37 injuries per year for each 100 employees or that, on the average, 1 out of every 3 employees are being injured. The national average OSHA incidence rate for all industries has been around 10 for the last several years.

- Severity Rate. The severity rate is similar to the OSHA incidence rate, except that it reflects the number of OSHA days lost (i.e., workdays lost and light duty days), instead of the number of injuries, per 100 man-years worked. For example, a severity rate of 500 would mean roughly that an organization is losing 500 workdays for every 100 employees per year, or that on the average each employee is losing 5 days a year for on-the-job injuries.

- Direct Costs. Direct costs are normally those for which money was actually expended and include worker's compensation, medical expenses, and wage continuation benefits (e.g., injury leave). There are many indirect costs such as down time, replacement time, lost time by witnesses and supervisors, etc., which are not included in these figures. Indirect costs are estimated to be 5 times the direct costs in cities according to the National Safety Council.

- Average Direct Costs per OSHA Recordable Injury. An average direct cost per OSHA recordable injury of $500 means that on the average each OSHA recordable injury (i.e., a non-first aid case) is costing the organization $500!

- Direct Cost per Man-Year. It shows the cost per 2,000 hours or the average cost per year per employee. A direct cost per man-year of $200 would mean that on the average an organization's injuries are costing $200 per employee per year.

In reviewing these FIGURES, the data for the AVERAGE (shown on the FIGURES as AVG) is the most important because it summarizes the results for all users combined. After examining the AVERAGES, it is important to examine how great the range of rates between users is. Wide ranges are important because they show that it is possible to achieve lower rates of injury under given operating systems and safety programs.

FIGURE 2-1

DESCRIPTION OF USERS BY OPERATIONAL CHARACTERISTICS

User Number	M=Municipal P=Private	Geograph. Area	No. of Employees	Point of Collection: M=Mechanical A=Alley BY=Backyard w/o intermed. can BYT=Backyard-Tub BYC=Backyard-Cart CS=Curbside	Type of Shift	Type of Service Provided			
						Coll. Crew Size(s)			Disposal
						Resid.	Comm.	Resid. & Comm.	L=Landfill I=Incinerator T=Trans. Stn.
101	M	South	325	CS/A	T/F	4	4		L
103	M	Midwest	80	BY/CS/A	T	3			
109	M	Midwest	500	BY/BYC	F	4,3			
111	M	West	280	CS	T	2			L
113	P	Midwest	33	CS	T	1,2	1	2	
115	M	South	300	CS/A	T/F	3	1,2		L,I
125	M	South	650	CS	T		1	3	L,I
133	M	Northwest	86	CS/A/BY	T	2	1,2		L
136	M	South	140	M/A	F	3,1	1		L
140	M	South	844	CS	T	3			
146	M	South	295	CS/A	T	1,2,3	1,2		L,T
148	M	Northeast	267	CS	T			4	
149	M	Midwest	65	CS	T	2	2		
152	M	Midwest	63	CS	T	2			

FIGURE 2-1 (continued)

OPERATIONAL CHARACTERISTICS CONTINUED

User Number	M=Municipal P=Private	Geograph. Area	No. of Employees	Point of Collection: M=Mechanical A=Alley BY=Backyard w/o intermed. can BYT=Backyard-Tub BYC=Backyard-Cart CS=Curbside	Type of Shift	Type of Service Provided			
						Coll. Crew Size(s)			Disposa
						Resid.	Comm.	Resid. & Comm.	L=Landfill I=Incinera T=Trans. S
157	M	West	203	CS	T	2	2	2	L,T
161	M	Midwest	125	CS/A	T	3,1			L
170	M	South	1481	CS/BYC/A	T	1,2,3,4,5	2,3,4,5		T
171	M	Midwest	370	A	T/F	3			
172	M	West	700	M/CS/A	T/F	1,3,2			L
178	M	South	629	CS	T	3	2		L,I
179	M	Northeast	532	CS	T	3	3		I,T
181	M	Midwest	278	BY	T	4			L
182	M	Northeast	470	CS	T	3			L
183	M	Midwest	308	CS	T	3	2		
186	M	South	297	CS	T	3	3		L
191	M	South	177	CS/A	T/F	3	1		L
197	M	West	86	CS	T	2	2,1	2	
201	M	Northeast	120	CS	T	3			

FIGURE 2-1 (continued)

OPERATIONAL CHARACTERISTICS CONTINUED

User Number	M=Municipal P=Private	Geograph. Area	No. of Employees	Point of Collection: M=Mechanical A=Alley BY=Backyard w/o intermed. can BYT=Backyard-Tub BYC=Backyard-Cart CS=Curbside	Type of Shift	Type of Service Provided			
						Coll. Crew Size(s)			Disposal
						Resid.	Comm.	Resid. & Comm.	L=Landfill I=Incinerator T=Trans. Stn.
204	M	West	52	CS/A/M	F	1,3	1,3		L
207	M	West	205	BYC	T	3	2		
210	M	West	15	CS	T			1,2	
211	M	West	40	CS/A	T	2	2		L
212	M	West	130	CS/A	F			2	
215	M	South	60	CS/BY/BYT	T/F	3	1		
217	M	South	820	CS/A/BY	F	1,2,3			L,T
221	M	West	210	CS	T	2			
226	M	South	87	CS	T	3	1,3		
235	M	South	125	BYT/A/CS	T	3	3		L
236	M	South	103	CS	T/F	3	1		L
237	M	Midwest	90	A/BYC	T/F			3	
242	M	South	101	CS/BY/BYT/A	T/F	3	3		L,T
244	M	West	30	BYT/BYC	T	2	1,2		

FIGURE 2-1 (continued)

OPERATIONAL CHARACTERISTICS CONTINUED

User Number	M=Municipal P=Private	Geograph. Area	No. of Employees	Point of Collection: M=Mechanical A=Alley BY=Backyard w/o intermed. can BYT=Backyard-Tub BYC=Backyard-Cart CS=Curbside	Type of Shift	Type of Service Provided: Coll. Crew Size(s) Resid.	Comm.	Resid. & Comm.	Dispos: L=Landfil I=Inciner T=Trans.
260	M	West	168	CS/BYT/A/M	T	1,2	2,3		L
261	M	Midwest	8	CS/A	T	3			L
265	M	West	200	CS/BYT/BYC	T	1,2	2		L,T
272	M	Northeast	127	CS	T	3	3		L,I
275	M	Northeast	40	CS	T	3			
283	M	South	72	CS/A	T/F	2	3,1		L,T
285	M	Midwest	79	A/BYT/BYC	T	3			
286	M	West	8		F				L,T
292	M	Northwest	225	CS/A/BYT/BYC	F	1,3	2		L
295	M	South	179	CS/BY	T	4	2		L
296	M	West	43	CS/A/BY	F	1	2,1		
299	M	Northeast	113	CS	T	3	3		L
316	M	Northeast	475	CS/A/BYT	F	2,3	2,3		
318	M	Northwest	48	A/CS	F	3	3	3	L

FIGURE 2-1 (continued)

OPERATIONAL CHARACTERISTICS CONTINUED

User Number	M=Municipal P=Private	Geograph. Area	No. of Employees	Point of Collection: M=Mechanical A=Alley BY=Backyard w/o intermed. can BYT=Backyard-Tub BYC=Backyard-Cart CS=Curbside	Type of Shift	Type of Service Provided			
						Coll. Crew Size(s)			Disposal
						Resid.	Comm.	Resid. & Comm.	L=Landfill I=Incinerator T=Trans. Stn.
323	M	Northeast	171	CS	T			3	L
324	P	Midwest	17	CS/A/BYT/BYC	T			1,2	
325	M	Northwest	45	CS/A	F	2,1	1,2,3		L
326	M	South	23	CS	T	3	3		L
327	M	South	140	CS	T	3	2,3		I,L
328	M	Midwest	33	CS	T/F	2,1	2		T
329	P	West	20	CS	T	3	2,1		
330	M	South	60	A/CS	F	3	3	3	L
331	M	Midwest	35	CS/A	T	3			
332	P	West	14	-	F		2		
333	M	Northeast	43	BY	T	3			
335	P	Northeast	24	CS	T	3	1		L
336	P	Midwest	51	-	T		2,1		
337	M	Northeast	405	CS	F	3			

FIGURE 2-1 (continued)

OPERATIONAL CHARACTERISTICS CONTINUED

User Number	M=Municipal P=Private	Geograph. Area	No. of Employees	Point of Collection: M=Mechanical A=Alley BY=Backyard w/o intermed. can BYT=Backyard-Tub BYC=Backyard-Cart CS=Curbside	Type of Shift	Type of Service Provided: Coll. Crew Size(s) Resid.	Comm.	Resid. & Comm.	Disposal L=Landfill I=Incinerat T=Trans. St
338	M	Northeast	405	CS	F	3			
339	M	Northeast	405	CS	F	3			
340	M	Midwest	318	CS	T	3			
341	M	West	35	CS/A	T	2	2,1		
342	M	Midwest	25	CS	T	1	2		L
343	M	West	17	CS	F	1			
344	M	Midwest	40	CS/A	F	2,3	1		
345	M	Midwest	38	-	F				L,I,T
346	P	Midwest	70	A/CS	T	2		2	L
347	M	Northeast	60	CS	T			4	T
348	M	West	35	CS/A	T	1,2,3			
349	P	Midwest	40	CS/BYT	T	2	1		
350	M	West	57	CS	T	2	2	2	
351	M	West	10	CS/A	T	2	1	3	
352	M	Midwest	52	CS/A	F	3	3		

FIGURE 2-1 (continued)

OPERATIONAL CHARACTERISTICS CONTINUED

User Number	M=Municipal P=Private	Geograph. Area	No. of Employees	Point of Collection: M=Mechanical A=Alley BY=Backyard w/o intermed. can BYT=Backyard-Tub BYC=Backyard-Cart CS=Curbside	Type of Shift	Type of Service Provided			
						Coll. Crew Size(s)			Disposal
						Resid.	Comm.	Resid. & Comm.	L=Landfill I=Incinerator T=Trans. Stn.
353	M	Midwest	20	CS	F			3	
354	M	Northeast	30	BYT	T	3			
355	P	Midwest	70	CS/BY	T	2	1,2		
356	P	Northeast	21	-	F		1		
358	M	South	18	BYC/CS	T	3	2		
359	P	Midwest	71	CS	T	2	1,2		
360	P	Northwest	30	-					L,T
361	M	West	44	-	F				L,T
362	M	Northeast	76	CS	T	4,3			
363	M	South	75	CS/A/BY	T	1,4	1		

FIGURE 2-2

SUMMARY OF INJURIES BY FREQUENCY, SEVERITY AND COSTS

FREQUENCY

- There were 1,595 cases reported by 82 of the IRIS users on-line: 296 first aid cases, 521 non-fatal cases without lost workdays, 774 lost workday cases, 3 permanent disability cases, and 1 fatality. Total man-hours for this quarter were 7,175,014.

- The AVERAGE OSHA incidence rate was 36 for this quarter. This means that one out of every three solid waste industry employees will experience a non-first aid injury a year. The national rate for all industries was 10.4. Therefore, the solid waste industry is experiencing more than three times as many injuries as the average industry.

- IRIS users ranged in frequency rates from User No. 352 which was experiencing 1.25 injuries per employee per year, to User No. 242 which was experiencing 2 injuries per 100 employees per year.

SEVERITY

(Days lost given are not final. These figures reflect what was received from IRIS users by September 30, 1977 and may be gross underestimates. For example, in the months since the publication of the first quarter Accident Trends for 1976, the OSHA severity rate has increased from 269 to 413, and not all cases are final yet.)

- So far, 778 cases this quarter incurred 10,198 workdays lost and light duty days.

- 49% of the total cases resulted in workdays lost and/or light duty days. The national average for all industries is 33%. This means that the solid waste industry has almost 1½ times as many lost workday injuries as the average industry.

- The AVERAGE OSHA severity rate was 284. This means that on the average, each employee is losing 2.8 days per year for injuries. One user's rate was as high as 29 days lost per year per employee; several are losing zero days a year per employee.

- On the AVERAGE, each lost workday case resulted in 13.12 workdays lost so far.

DIRECT COSTS

(Costs given are not final. These figures reflect what was received from IRIS users by September 30, 1977, and may be gross underestimates. For example, first quarter of 1976's AVERAGE cost per OSHA recordable injury has gone up from $296 to $522.)

- Total direct costs so far for injuries that occurred during the first quarter was $545,935.

- The AVERAGE cost per OSHA recordable injury was $425.

- The AVERAGE cost per man-year was $154. This means that the average solid waste injury (non-first aid) cost $154 per full-time employee per year so far.

Starting: January, 1976

FIGURE 2-3

COMPARISON OF INJURY RATES AND OSHA DAYS LOST FOR ALL USERS

USER	OSHA INCIDENCE RATE QTR 1	QTR 2	QTR 3	QTR 4	SEVERITY RATE QTR 1	QTR 2	QTR 3	QTR 4	AVERAGE OSHA DAYS LOST QTR 1	QTR 2	QTR 3	QTR 4
101	12	33	44	20	47	387	101	145	6.50	27.00	8.33	21.14
103				106				365				3.44
109	36	48	50	22	195	174	197	126	8.03	8.15	7.65	6.27
111	68	76	79	54	1089	1182	667	292	23.39	22.05	11.59	14.62
113				28				0				0.00
115				29				160				10.55
125	31	35	42	20	876	370	560	446	35.54	13.03	16.72	32.48
133				12				86				10.50
136	0	0	0		0	0	0		0.00	0.00	0.00	
140	31	55			347	673			15.37	16.56		
146	26	21	34	36	537	136	142	250	66.50	20.60	9.82	12.93
148		23	5	18		149	0	61		12.86	0.00	9.25
149				125				1146				13.22
152				87				355				8.14
157				16				90				6.29
161	13	42	63	54	0	33	98	38	0.00	1.60	5.00	1.11
170				23				172				9.64
171	44	62	58	47	209	226	291	625	9.58	5.96	10.53	19.58
172	50	55	69	38	477	1104	439	590	14.28	27.51	11.23	32.79
178				18				106				11.07
179			13	29			142	431			19.17	24.21
181	44	49	66	51	369	147	261	427	11.48	4.26	6.89	13.04
182				12				22				4.60
183				38				161				6.31
186	13	24	24	23	69	276	101	108	12.25	22.00	8.22	7.36
191	57	45	93	47	188	149	230	505	4.00	5.11	4.62	15.73
197			38	31			317	1232			10.00	49.00
201				8				242				61.00
204	79	134	47	30	342	83	55	273	13.00	8.00	7.00	12.00
207	78	96	71	97	579	249	618	350	10.30	5.35	13.19	8.53
210	104	0	48	148	467	0	1332	3142	9.00	0.00	27.50	29.80
211	9	67	34	63	539	278	93	211	62.00	4.71	2.75	3.86
212	79	44			759	483			9.65	11.00		

FIGURE 2-3 (Continued)

USER	OSHA INCIDENCE RATE QTR 1	QTR 2	QTR 3	QTR 4	SEVERITY RATE QTR 1	QTR 2	QTR 3	QTR 4	AVERAGE OSHA DAYS LOST QTR 1	QTR 2	QTR 3	QTR 4
215	0	0	22	0	0	0	1587	0	0.00	0.00	72.67	0.00
217		43	59	43		192	152	70		11.22	12.38	8.67
221			10	76			47	993			4.50	13.07
226				18				0				0.00
235	23	56	40	36	113	0	0	51	6.00	0.00	0.00	2.80
236	89	103	73	57	1492	663	248	51	18.53	8.86	6.00	1.78
237	15	33	46	35	35	150	92	128	3.50	6.40	3.14	4.83
242	4	0	0	5	100	0	0	18	25.00	0.00	0.00	3.50
244	93	56	42	56	170	197	182	183	2.75	3.50	6.50	6.50
260	68	54	103	117	759	513	1178	1296	19.42	16.20	17.64	14.26
261	48	0	0	48	145	0	0	429	3.00	0.00	0.00	9.00
265	34	46	65	70	249	301	403	522	8.64	7.80	7.30	10.55
272	11	15	19	40	243	11	98	150	32.00	1.50	6.50	6.83
275		59	59	93		629	78	384		10.67	2.67	9.25
283	12	50	50	20	0	133	117	10	0.00	8.00	3.50	2.00
285	7	0			13	0			2.00	0.00		
286	0	0	0	39	0	0	0	0	0.00	0.00	0.00	0.00
292	3	10	7	5	284	19	14	7	86.00	4.33	2.75	3.00
295	17	20	19	29	64	20	101	212	4.75	2.00	15.50	13.33
296	19	75	57	55	476	2911	218	1765	25.00	51.50	5.75	32.17
299				44				155				28.00
316		53	60	29		606	425	336		17.05	12.82	18.14
318			78	46			2431	346			31.09	7.57
323				9				56				13.00
324		78	70	46		0	234	23		0.00	3.33	1.00
325		43	47	46		135	347	732		4.75	13.00	18.67
326			0	18			0	36			0.00	2.00
328				0				0				0.00
329		37	17	50		37	101	17		2.00	6.00	1.00
330		25	70	44		83	78	748		5.00	2.50	20.60
331			0	0			0	0			0.00	0.00
333			66	99			33	1219			2.00	37.00
336				23				62				2.67

FIGURE 2-3 (Continued)

USER	OSHA INCIDENCE RATE QTR 1	QTR 2	QTR 3	QTR 4	SEVERITY RATE QTR 1	QTR 2	QTR 3	QTR 4	AVERAGE OSHA DAYS LOST QTR 1	QTR 2	QTR 3	QTR 4
337			44	38			410	262			9.29	6.92
338			32	25			246	191			7.78	7.57
339			23	35			118	198			5.12	5.67
340				29				691				66.37
341			77	58			1367	737			19.50	12.75
343			50	75			99	50			2.00	2.00
344				11				80				7.00
345				10				632				65.00
346				29				95				3.25
347				20				20				3.00
348				34				192				8.50
349				49				121				10.00
350				42				96				3.00
351				51				101				2.00
353				35				122				7.00
354				129				388				9.00
355				33				16				1.50
358				88				4230				145.00
359				57				447				12.43
361				23				0				0.00
362				4				301				72.00
363				6				0				0.00
AVG.	34	44	45	33	413	386	292	281	17.34	14.48	11.60	14.52

STARTING: JANUARY, 1977

FIGURE 2-3 (Continued)

COMPARISON OF INJURY RATES AND OSHA DAYS LOST FOR ALL USERS

USER	OSHA INCIDENCE RATE QTR 1	QTR 2	QTR 3	QTR 4	SEVERITY RATE QTR 1	QTR 2	QTR 3	QTR 4	AVERAGE OSHA DAYS LOST QTR 1	QTR 2	QTR 3	QTR 4
101	17				60				13.00			
103	88				175				5.60			
109	14				79				5.83			
111	38				346				13.65			
113	28				339				24.00			
115	32				516				19.37			
125	26				301				13.81			
133	38				608				31.60			
146	23				393				30.30			
148	13				163				24.25			
149	124				1197				17.86			
152	58				283				8.80			
157	48				97				4.18			
161	58				318				13.67			
170	31				276				10.19			
171	42				291				9.16			
172	52				237				13.00			
178	4				65				15.50			
179	36				426				17.05			
181	44				245				9.67			
182	15				86				8.90			
183	64				162				4.82			
186	35				158				7.31			
191	65				415				8.24			
197	25				130				5.25			
201	25				53				6.50			
204	24				0				0.00			
207	84				457				12.47			
210	22				22				1.00			
211	88				399				8.33			
215	0				0				0.00			
217	41				41				5.40			
221	90				1269				14.18			

FIGURE 2-3 (Continued)

USER	OSHA INCIDENCE RATE QTR 1	QTR 2	QTR 3	QTR 4	SEVERITY RATE QTR 1	QTR 2	QTR 3	QTR 4	AVERAGE OSHA DAYS LOST QTR 1	QTR 2	QTR 3	QTR 4
226	35				191				11.00			
235	46				502				12.91			
236	61				263				7.82			
237	45				683				33.40			
242	0				0				0.00			
244	54				2871				105.50			
260	80				714				14.24			
265	54				339				10.40			
272	11				11				1.50			
275	62				591				14.25			
283	24				34				2.33			
286	0				0				0.00			
292	9				195				26.17			
296	27				36				2.00			
299	72				144				5.20			
316	46				759				23.15			
318	33				273				13.67			
323	17				200				27.00			
324	23				680				29.00			
325	73				612				9.20			
326	51				2700				52.67			
328	0				0				0.00			
329	17				0				0.00			
330	21				332				23.50			
331	30				0				0.00			
333	49				0				0.00			
336	16				23				3.00			
337	35				216				7.44			
338	33				240				8.12			
339	45				329				7.86			
340	36				280				18.55			
341	101				1885				21.83			
343	72				24				1.00			

FIGURE 2-3 (Continued)

USER	OSHA INCIDENCE RATE QTR 1	QTR 2	QTR 3	QTR 4	SEVERITY RATE QTR 1	QTR 2	QTR 3	QTR 4	AVERAGE OSHA DAYS LOST QTR 1	QTR 2	QTR 3	QTR 4
344	69				552				8.00			
345	59				285				5.80			
346	118				213				4.14			
347	34				68				3.33			
348	62				718				11.50			
349	94				1175				25.00			
350	77				1902				43.50			
351	52				0				0.00			
352	125				589				33.00			
353	18				200				11.00			
354	83				0				0.00			
355	11				6				1.00			
358	58				232				4.00			
361	11				0				0.00			
362	21				267				15.75			
363	33				98				5.00			
AVG.	36				284				13.09			

Starting: January, 1976

FIGURE 2-4

COMPARISON OF DIRECT COSTS BY REPORTING PERIOD FOR ALL USERS

USER	TOTAL INJURY COSTS QTR 1	QTR 2	QTR 3	QTR 4	AVG. COST PER OSHA REC. INJ. QTR 1	QTR 2	QTR 3	QTR 4	AVERAGE COST PER MAN YEAR QTR 1	QTR 2	QTR 3	QTR 4
101	4,210	29,631	5,735	5,260	386	986	130	263	51	326	57	51
103				3,627				203				240
109	13,513	12,994	19,851	12,958	312	213	275	345	112	103	138	78
111	59,293	42,034	30,744	14,888	1,234	764	487	346	836	577	384	185
113				102				51				14
115				6,895				328				95
125	50,760	25,734	47,226	36,174	832	357	497	753	260	123	208	150
133				638				212				26
136	0	0	0		0	0	0		0	0	0	
140	39,842	69,843			711	688			219	378		
146	9,041	5,442	3,060	8,171	475	340	117	291	121	72	40	105
148		3,577	110	2,092		255	36	190		59	1	34
149				4,202				323				404
152				3,365				240				209
157				2,977				372				61
161	135	815	1,526	683	18	80	93	48	5	33	59	26
170				22,212				325				74
171	3,582	6,376	9,486	21,455	148	163	237	613	65	100	137	285
172	27,167	58,431	27,413	39,375	393	749	274	667	197	411	188	252
178				7,107				263				48
179			8,661	35,411			412	737			53	217
181	11,510	5,081	9,833	15,586	391	153	209	432	176	76	138	221
182				1,032				82				9
183				7,505				312				119
186	1,295	8,021	2,950	3,550	143	471	163	208	18	111	40	47
191	1,475	1,685	2,101	4,879	86	120	70	304	49	54	65	142
197			2,710	64,080			451	12,816			171	4,028
201				2,571				1,285				102
204	2,481	517	300	2,142	275	39	50	535	217	53	23	162
207	4,523	9,636	12,908	6,786	141	235	403	150	110	224	288	146
210	1,445	0	3,218	9,667	361	0	1,609	1,381	374	0	779	2,038
211	794	1,987	600	1,687	758	248	145	195	68	167	50	131
212	14,297	7,138			621	549			488	241		

FIGURE 2-4 (Continued)

USER	TOTAL INJURY COSTS QTR 1	QTR 2	QTR 3	QTR 4	AVG. COST PER OSHA REC. INJ. QTR 1	QTR 2	QTR 3	QTR 4	AVERAGE COST PER MAN YEAR QTR 1	QTR 2	QTR 3	QTR 4
215	0	0	5,725	0	0	0	1,908	0	0	0	416	0
217		87,664	36,713	18,317		956	259	163		415	155	70
221			1,045	14,110			253	491			27	382
226				60				20				3
235	1,185	725	240	886	197	48	21	88	44	26	8	32
236	12,768	9,550	8,223	1,442	608	329	357	80	541	340	261	45
237	604	1,813	1,583	1,925	201	259	143	218	30	85	66	84
242	6,877	0	0	278	6,877	0	0	139	274	0	0	7
244	706	904	748	962	117	226	249	240	109	127	104	135
260	2,317	5,620	8,797	17,683	110	330	258	442	75	178	266	518
261	159	0	0	960	159	0	0	960	76	0	0	457
265	2,820	8,216	14,019	9,500	214	455	519	306	74	211	335	213
272	1,861	109	1,224	1,444	620	27	244	131	70	4	46	52
275		1,437	272	1,297		239	45	144		141	26	134
283	119	1,346	1,890	173	59	147	210	43	7	74	105	8
285	61	0			61	0			4	0		
286	0	0	0	80	0	0	0	80	0	0	0	30
292	7,327	894	483	376	3,663	127	96	94	121	13	6	4
295	911	578	1,172	5,257	177	96	195	477	30	19	38	139
296	1,982	16,786	1,256	10,471	991	2,098	209	1,745	188	1,581	119	957
299				2,010				125				55
316		37,757	24,016	21,089		629	338	602		335	203	177
318			14,061	4,258			1,278	593			999	277
323				893				205				19
324		92	491	62		30	163	31		23	114	14
325		2,159	4,736	5,701		359	676	806		153	316	372
326			0	91			0	91			0	16
328				0				0				0
329		153	378	194		66	338	64		28	63	32
330		1,053	480	2,612		351	53	435		87	37	189
331			0	0			0	0			0	0
333			223	2,044			55	340			36	336
336				60				20				4

FIGURE 2-4 (Continued)

USER	TOTAL INJURY COSTS QTR 1	QTR 2	QTR 3	QTR 4	AVG. COST PER OSHA REC. INJ. QTR 1	QTR 2	QTR 3	QTR 4	AVERAGE COST PER MAN YEAR QTR 1	QTR 2	QTR 3	QTR 4
337			11,442	7,664			817	638			360	241
338			6,431	4,968			714	709			226	178
339			3,152	6,265			394	522			90	182
340				15,012				682				195
341			9,864	4,848			896	597			691	350
343			341	453			170	151			84	113
344				318				318				36
345				1,670				1,670				162
346				619				154				45
347				331				110				22
348				1,172				390				132
349				729				182				88
350				481				120				51
351				64				64				32
353				238				119				41
354				1,193				198				256
355				165				27				9
358				3,953				1,317				1,153
359				2,061				187				105
361				40				20				4
362				1,934				1,934				80
363				31				31				1
AVG.	285,060	465,798	347,437	525,521	522	510	324	436	180	223	147	144

FIGURE 2-4 (Continued)

COMPARISON OF DIRECT COSTS BY REPORTING PERIOD FOR ALL USERS

USER	TOTAL INJURY COSTS QTR 1	QTR 2	QTR 3	QTR 4	AVG. COST PER OSHA REC. INJ. QTR 1	QTR 2	QTR 3	QTR 4	AVERAGE COST PER MAN YEAR QTR 1	QTR 2	QTR 3	QTR 4
101	2,808				147				25			
103	2,399				167				150			
109	9,361				356				53			
111	19,743				658				249			
113	1,286				643				181			
115	17,674				734				247			
125	26,994				442				113			
133	9,022				902				346			
146	21,552				1,197				279			
148	3,669				458				61			
149	7,598				584				727			
152	3,265				359				210			
157	3,006				130				63			
161	3,770				251				146			
170	32,198				353				110			
171	10,280				311				130			
172	23,439				282				147			
178	3,233				538				22			
179	22,753				392				142			
181	10,171				328				143			
182	3,337				222				32			
183	6,558				156				100			
186	4,388				168				59			
191	4,182				190				124			
197	1,124				281				69			
201	741				123				30			
204	350				116				27			
207	6,857				175				147			
210	80				80				17			
211	3,306				300				264			
215	0				0				0			
217	11,798				109				44			
221	24,148				706				635			

FIGURE 2-4 (Continued)

USER	TOTAL INJURY COSTS QTR 1	QTR 2	QTR 3	QTR 4	AVG. COST PER OSHA REC. INJ. QTR 1	QTR 2	QTR 3	QTR 4	AVERAGE COST PER MAN YEAR QTR 1	QTR 2	QTR 3	QTR 4
226	1,276				212				73			
235	6,068				466				214			
236	12,041				602				367			
237	13,784				1,253				564			
242	0				0				0			
244	15,247				3,811				2,074			
260	6,984				258				206			
265	6,452				258				140			
272	160				53				6			
275	1,872				312				193			
283	473				94				22			
286	0				0				0			
292	3,533				504				43			
296	440				146				39			
299	2,275				87				63			
316	50,532				918				424			
318	1,566				313				104			
323	2,676				380				66			
324	312				312				73			
325	8,345				758				555			
326	34,976				11,658				5,977			
328	0				0				0			
329	40				40				6			
330	1,749				583				123			
331	56				28				8			
333	79				26				12			
336	40				20				3			
337	5,740				521				185			
338	4,213				468				155			
339	6,495				433				194			
340	13,006				500				178			
341	18,009				1,286				1,295			
343	154				51				37			

FIGURE 2-4 (Continued)

USER	TOTAL INJURY COSTS QTR 1	QTR 2	QTR 3	QTR 4	AVG. COST PER OSHA REC. INJ. QTR 1	QTR 2	QTR 3	QTR 4	AVERAGE COST PER MAN YEAR QTR 1	QTR 2	QTR 3	QTR 4
344	2,687				447				308			
345	1,672				278				164			
346	1,101				68				81			
347	662				132				45			
348	3,870				645				402			
349	2,833				354				332			
350	6,595				942				720			
351	20				20				10			
352	3,593				256				320			
353	252				252				45			
354	206				51				42			
355	108				54				5			
358	495				247				143			
361	20				20				2			
362	2,888				577				122			
363	715				143				46			
AVG.	547,400				420				152			

FIGURE 2-5

SUMMARY OF ACCIDENT FACTORS FOR SELECTED ACCIDENT CHARACTERISTICS WITH HIGHEST PERCENT OF OSHA RECORDABLE INJURIES OSHA DAYS LOST AND DIRECT COSTS

Type of Characteristic	Factors with the:		
	Highest % of OSHA Recordable Injuries	Highest % of OSHA Days Lost	Highest % of Direct Costs
Activity	Lifting or dumping container - 35% Getting off equipment - 9% Standing or walking - 8%	Lifting or dumping container - 31% Getting off equipment - 11% Standing or walking - 10%	Lifting or dumping container - 29% Getting off equipment - 11% Carrying container - 9%
Accident Type	Overexertion involving container - 18% Fall on same level - 10% Slip on same level - 7%	Overexertion involving container - 24% Fall on same level - 13% Fall to a different level - 9%	Overexertion involving container - 22% Fall on same level - 12% Fall to a different level - 11%
Accident Site	On collection route at back of truck - 32% On collection route at curb - 22% On collection route in customer's yard - 11%	On collection route at back of truck - 26% On collection route at curb - 18% On collection route in customer's yard - 11%	On collection route at back of truck - 26% On collection route at curb - 22% On collection route in customer's yard - 9%
Nature of Injury	Sprain or strain - 43% Bruise - 24% Cut or puncture - 15%	Sprain or strain - 52% Bruise - 17% Fracture - 9%	Sprain or strain - 49% Bruise - 15% Fracture - 11%
Part of Body	Back - 22% Eyes - 8% Knee- 7%	Back - 35% Ankle - 8% Shoulder - 6%	Back - 34% Leg - 11% Shoulder - 6%

Accident Trends
2nd Quarter 1977

IRIS

EXHIBIT 7

ACCIDENT TRENDS

IN THE SOLID WASTE MANAGEMENT INDUSTRY

"SLIPS AND FALLS"

QUARTER: APRIL 1 TO JUNE 30, 1977

DEVELOPED BY SAFETY SCIENCES, DIVISION OF WSA INC.,
FOR THE U.S. ENVIRONMENTAL PROTECTION AGENCY
OFFICE OF SOLID WASTE MANAGEMENT PROGRAMS
UNDER CONTRACT NO. 68-03-0231

safety sciences Division of WSA Inc., 11772 Sorrento Valley Road
San Diego, CA 92121 (714) 755-9359 & 452-1010

Accident Trends in the Solid Waste Management Industry is developed quarterly using data from IRIS (the Injury Reporting and Information System for Solid Waste Management). Accident Trends is designed to summarize and dicuss the data from all IRIS users and to provide data and conclusions which affect the industry as a whole. A companion volume, the QSMR (Quarterly Safety Management Report), is developed individually for each IRIS user who reported injuries during the quarter. Each QSMR concentrates only on the injuries of the individual IRIS user for which it is prepared.

IRIS is currently made up of 65 users. All possible care is taken to insure data quality. The nature of the data and the reports, however, precludes complete accuracy. Not all cases are closed by the end of the quarter. These accidents continue to be monitored. Occasionally, full lost time and cost data is not available. Consequently, the totals for these categories may be underestimates. A concerted effort is made to correct the lost time and cost figures and improve IRIS collection methods. The recommendations and countermeasures presented are suggestions that must be evaluated in terms of individual user's needs.

The purpose of this and other IRIS publications is to disseminate new ideas and alternative methods in the solid waste field. IRIS serves as a clearinghouse in this regard, but does not promote or endorse any method or product. Implementation of QSMR suggestions should be done only after careful evaluation by each user and at each user's discretion.

ACCIDENT TRENDS

IN THE SOLID WASTE MANAGEMENT INDUSTRY

SLIPS AND FALLS

QUARTER: APRIL 1, 1977 THROUGH JUNE 30, 1977

TABLE OF CONTENTS

		Page
INTRODUCTION		iv
I.	DISCUSSION OF SLIPS AND FALLS AND PREVENTION METHODS	1-1
	1. Identifying the Problem	1-1
	1.1 Hazardous Surface Conditions	1-2
	1.2 Task/Hazards Analysis for Slips and Falls	1-3
	1.3 Seasonal Variations in Injury Rates for Slips and Falls	1-9
	1.4 Type of Collection Injury Rates for Slips and Falls	1-10
	1.5 Type of Injury	1-12
	2. Countermeasures for Slips and Falls (Prevention Methods)	1-13
	2.1 Employee Training	1-13
	2.2 Personal Protective Equipment	1-15
	2.3 Equipment Modifications	1-17
	2.4 Altering Operational Procedures	1-18
II.	SECOND QUARTER IRIS INDUSTRY-WIDE DATA	2-1

LIST OF FIGURES

		Page
FIGURE 1-1	Slips and Falls Injury Rates for Collection Division	1-2
FIGURE 1-2	Slips and Falls Hazardous Surface Conditions for the Collection Division	1-3
FIGURE 1-3	Slips and Falls Preliminary Task/ Hazard Analysis Collection Division	1-4
FIGURE 1-4	Injury Rates for Slips and Falls by Quarter for the Collection Division	1-10
FIGURE 1-5	Injury Rates for Slips and Falls by Type of Collection	1-11
FIGURE 1-6	Ten Most Common Injuries for Slips and Falls	1-12
FIGURE 2-1	Description of Users by Operational Characteristics	2-4
FIGURE 2-2	Summary of Injuries by Frequency, Severity, and Costs	2-11
FIGURE 2-3	Comparison of Injury Rates and OSHA Days Lost for All Users	2-13
FIGURE 2-4	Comparison of Direct Costs by Reporting Period for All Users	2-19
FIGURE 2-5	Summary of Accident Factors for Selected Accident Characteristics with Highest Percent of OSHA Recordable Injuries, Workdays Lost and Direct Costs	2-25

INTRODUCTION

This is the Accident Trends report for the second quarter of 1977 (April 1 to June 30). This report is divided into two sections, a discussion of the special feature topic, slips and falls and their preventative measures and a summary of the data for the quarter. Section I includes a Preliminary Task/Hazards Analysis for slips and falls. The discussion in Section I will encompass the data since the instigation of IRIS in December 1975, but Section II relates only the rates and figures applicable to the second quarter of 1977.

Of the 65 IRIS users on-line second quarter, 62 users reported 1,485 injuries. Since the injury rates are based on man-hours of exposure, they reflect the various start-up periods of the IRIS users.

The time lost and direct costs shown on the FIGURES were provided as of September 30, the "closing date" for receiving data for the second quarter. Any cases where the time lost or direct cost data is incomplete are being monitored for updating.

SECTION I

DISCUSSION OF SLIPS AND FALLS AND PREVENTION METHODS

The topic chosen for this quarter's Accident Trends report for the solid waste management industry is the group of injuries that occur from slips and falls. Slips and falls are the second most frequent group of accidents, second only to overexertions. For the IRIS reporting period of 1/76 through 3/77, slips and falls resulted in 957 OSHA recordable injuries (14.6%), 9,932 days lost (19.7%), and $470,540 in direct costs (17.7%).

This report will first analyze the accident patterns of the slips and falls in terms of hazardous surface conditions, tasks, seasonal variation, type of collection, and type of injury. Then the discussion will cover preventative measures for reducing slips and falls. They include employee training, personal protective equipment (safety shoes), equipment modifications, and altering operational procedures.

1. IDENTIFYING THE PROBLEM

Solid waste employees, particularly collectors, are required to walk nearly constantly from collection stop to stop and to get on and off the equipment. This exposes them to a variety of climatic and surface condition hazards that cannot be controlled. Therefore, other factors that enter into their job must be considered to reduce their exposure to slips and falls such as providing slip resistant safety shoes or installing self-cleaning, slip resistant steps on the vehicles.

The following injury rates* were derived from using man-hours of exposure for only the collection division:

*See Section II for explanations of the injury rates.

FIGURE 1-1

SLIPS AND FALLS

INJURY RATES

FOR COLLECTION DIVISION

OSHA Incidence Rate	9.9
OSHA Lost Workday Cases	7.0
OSHA Severity Rate	103
Average Workdays Lost Per Lost Workday Case	14.6
Average Direct Cost Per OSHA Recordable Injury	$492
Average Direct Cost Per Lost Workday Case	$673
Direct Cost Per Man-Year	$49

The injury rates show that slips and falls should be of major concern to solid waste managers since they cause one out of ten collection employee's non-first aid injuries a year, and two-thirds of the slips and falls result in lost time. Slips and falls on the average will result in a day lost per collection employee on the payroll per year and an average days lost of 14.6 per lost workday injury. This group of injuries also cost the average solid waste organization $49 per collection employee per year.

1.1 Hazardous Surface Conditions

As the following chart indicates, icy and wet surface conditions were by far the leading hazardous surface conditions. However, if the columns were totaled, the hazardous surface condition categories given only account for 61% of the OSHA recordable injuries, 56% of the days lost, and 52% of the direct costs for their respective totals for the slips and falls. This means that allowing for some of the missing percentages to be categorized under miscellaneous categories (e.g., collapsing surface, object protruding from ground, etc.) nearly a third of the injuries did not involve a hazardous surface condition.

FIGURE 1-2

SLIPS AND FALLS

HAZARDOUS SURFACE CONDITIONS

FOR THE COLLECTION DIVISION

	% No. Inj.	% Days Lost	% Direct Costs
Icy Surface	24	25	25
Wet Surface	14	14	13
Depression	8	5	4
Rock on ground	7	5	4
Oily surface	4	5	4
Inclined surface	2	1	1
Waste on ground	2	1	1
Total	957	9932	$470,540

1.2 Task/Hazards Analysis for Slips and Falls

The Task/Hazards Analysis in FIGURE 1-3 is ordered from the task with the highest frequency of slips and falls to the lowest. Two types of percentages are given, percent of total (e.g., 38% OSHA recordable injuries for "getting on/off vehicle" is 38% of all slips and falls injuries) and percent of task (e.g., 18% OSHA recordable injuries for "wet surface" to the right of "cab or running board" is 18% of all slips and falls as the employee was getting on or off the cab or running board). This type of analysis is especially useful in identifying training needs, but each organization should perform a similar analysis to identify their own training needs or to tailor their training programs to have added emphasis in the problem areas identified.

The Task/Hazards Analysis reveals that, surprisingly, getting on and off the vehicle had the highest frequency, days lost and direct costs for slips and falls. An examination of the hazards column indicates that for getting in and out of the cab (or running board), the majority of the accidents were due to the running board being wet, icy or oily, in that order. Comparing hazardous conditions between the running board and

SLIPS AND FALLS

PRELIMINARY TASK/HAZARD ANALYSIS

COLLECTION DIVISION*

TASK	PERCENT OF TOTAL			HAZARDS	PERCENT OF TASK		
	% No. Inj.	% Days Lost	% Direct Costs		% No. Inj.	% Days Lost	% Direct Costs
1. Getting on/off vehicle	38%	40%	36%				
A. Cab or Running Board	20%	24%	20%	1. Wet Surface	18%	10%	16%
				a. Running Board	16%	9%	15%
				b. Ground	2%	<1%	<1%
				2. Icy Surface	17%	15%	14%
				a. Running Board	13%	12%	10%
				b. Ground	4%	2%	4%
				3. Object on Ground	7%	3%	3%
				4. Oily Surface	5%	8%	8%
				a. Ground	3%	6%	5%
				b. Running Board	3%	2%	3%
				5. Depression	4%	9%	5%
				6. Collapsing Running Board	1%	<1%	<1%
				7. Waste on Ground	<1%	1%	1%

SLIPS AND FALLS

PRELIMINARY TASK/HAZARD ANALYSIS

COLLECTION DIVISION

TASK	PERCENT OF TOTAL			HAZARDS	PERCENT OF TASK		
	% No. Inj.	% Days Lost	% Direct Costs		% No. Inj.	% Days Lost	% Direct Costs
B. Riding Step	14%	12%	11%	1. Wet Surface	13%	16%	18%
				a. Riding Step	11%	15%	17%
				b. Ground	2%	<1%	2%
				2. Depression	12%	8%	9%
				3. Object on Ground	8%	14%	7%
				4. Icy Surface	8%	6%	7%
				a. Ground	4%	4%	5%
				b. Riding Step	4%	2%	2%
				5. Oily Riding Step	4%	3%	4%
				6. Collapsing Step	1%	3%	4%
C. Truck Bed or Tail-gate	1%	1%	1%	1. Wet Truck Bed	13%	3%	4%
				2. Waste on Ground	13%	2%	10%
2. Carrying Container	20%	19%	20%	1. Icy Surface	34%	32%	36%
				2. Wet Surface	14%	9%	9%
				3. Collapsing Surface	11%	11%	13%
				4. Depression	10%	8%	7%

SLIPS AND FALLS

PRELIMINARY TASK/HAZARD ANALYSIS

COLLECTION DIVISION

TASK	PERCENT OF TOTAL			HAZARDS	PERCENT OF TASK		
	% No. Inj.	% Days Lost	% Direct Costs		% No. Inj.	% Days Lost	% Direct Costs
2. Carrying Container (cont.)				5. Object on Ground	8%	8%	6%
				6. Inclined Surface	3%	1%	1%
				7. Waste on Ground	2%	1%	2%
				8. Oily Surface	1%	<1%	1%
3. Standing/Walking	14%	14%	15%	1. Icy Surface	42%	49%	54%
				2. Depression	13%	6%	6%
				3. Wet Surface	8%	7%	6%
				4. Object on Ground	8%	5%	5%
				5. Oily Surface	6%	8%	2%
				6. Waste on Ground	2%	<1%	<1%
				7. Inclined Surface	<1%	<1%	<1%
				8. Collapsing Surface	<1%	<1%	<1%
4. Lifting Container	10%	10%	10%	1. Icy Surface	31%	32%	29%
				2. Wet Surface	19%	24%	16%
				3. Oily Surface	5%	9%	8%
				4. Object on Ground	5%	2%	2%

SLIPS AND FALLS

PRELIMINARY TASK/HAZARD ANALYSIS

COLLECTION DIVISION

TASK	PERCENT OF TOTAL			HAZARDS	PERCENT OF TASK		
	% No. Inj.	% Days Lost	% Direct Costs		% No. Inj.	% Days Lost	% Direct Costs
4. Lifting Container (cont.)				5. Depression	2%	2%	1%
				6. Waste on Ground	1%	0%	<1%
5. Pushing/Pulling Container	6%	4%	4%				
A. Wheeled Cart	3%	2%	2%	1. Icy Surface	21%	53%	61%
				2. Inclined Surface	12%	7%	8%
				3. Wet Surface	9%	18%	14%
				4. Objects on Ground	9%	6%	5%
				5. Depression	9%	4%	2%
B. Bulk Container	1%	1%	1%	1. Oily Surface	25%	40%	26%
				2. Wet Surface	25%	2%	3%
				3. Icy Surface	25%	0%	3%
6. Riding on Step	4%	4%	3%	1. Wet Step	15%	18%	25%
				2. Collapsing Step	11%	6%	7%
				3. Icy Step	6%	3%	5%
7. Dumping Container	4%	4%	3%	1. Wet Surface	25%	8%	14%
				2. Icy Surface	18%	15%	18%

FIGURE 1-3 (Continued)

SLIPS AND FALLS

PRELIMINARY TASK/HAZARD ANALYSIS

COLLECTION DIVISION

TASK	PERCENT OF TOTAL			HAZARDS	PERCENT OF TASK		
	% No. Inj.	% Days Lost	% Direct Costs		% No. Inj.	% Days Lost	% Direct Costs
7. Dumping Container (cont.)				3. Depression	10%	6%	3%
				4. Object on Ground	5%	<1%	<1%
				5. Inclined Surface	1%	2%	5%

ground, 33% of the injuries occurred due to the running board being slippery while 21% of the injuries were due to hazardous surface conditions on the ground that the employees were stepping onto. The missing percentage of approximately 45% of the accidents while performing this activity did not cite any hazardous conditions.

Slips and falls while getting on and off the riding step, however, cited less hazardous surface condition causes. 20% of the accidents occurred due to wet, icy, oily and collapsing steps while 26% were due to hazardous surface conditions on the ground, and over 50% of the injuries did not report any hazardous surface conditions.

Knowing the frequency of the getting on and off vehicle accidents is not only useful in analyzing training needs but also in identifying equipment modifications needs. However, the discussion of the data in conjunction with prevention methods will be handled under the individual prevention methods subsections.

Two other activities, "carrying container" and "standing/walking", require extensive walking and resulted in 20% and 14% of the slips and falls injuries, respectively. Countermeasures for these injuries can include providing slip resistant safety shoes or reducing the amount of carrying or walking by altering some operational procedures (e.g., change from backyard to curbside). Ice was a causal factor in at least a third of each activity's slips and falls, and at least four-fifths of these injuries cited a hazardous surface condition.

Of the four remaining activities, three involved handling containers ("lifting container", "pushing/pulling container", and "dumping container"). Ice was the major surface condition responsible for slips and falls that occurred while the injured employee was lifting the container and while pushing/pulling containers, but wet surfaces caused more of the riding on step and dumping container slips and falls.

1.3 Seasonal Variations in Injury Rates for Slips and Falls

Analyzing the injury rates by the IRIS quarters of first quarter equaling January through March, etc., the following chart shows that the first two quarters of the year has the greatest incidence, severity and direct costs for slips and falls. In addition, the first quarter has more slips and falls than the second quarter. The majority of the slips and falls occurring during the first two quarters of the year was due to snowfall at most of the IRIS users.

The incidence rate, surprisingly, is only a quarter higher between the high and low quarters. However, the severity and direct cost per man-year rates are nearly double for the first quarter when compared to the third quarter.

FIGURE 1-4

INJURY RATES FOR

SLIPS AND FALLS BY QUARTER

FOR THE COLLECTION DIVISION

	1st Qtr 76 & 77	2nd Qtr 76	3rd Qtr 76	4th Qtr 76
OSHA Incidence Rate	11.7	9.6	8.2	8.6
OSHA Lost Workday Cases Rate	8.7	6.6	5.1	6.2
OSHA Severity Rate	132	108	71	78
Avg. Workdays Lost Per Lost Workday Case	15.2	16.4	14.1	12.7
Avg. Direct Costs Per OSHA Recordable Injury	$541	$511	$429	$423
Avg. Direct Costs Per Lost Workday Case	$713	$722	$669	$566
Direct Costs Per Man-Year	$63	$49	$35	$36

1.4 Type of Collection Injury Rates for Slips and Falls

Of the four types of collection analyzed, backyard collection, as expected, has the highest incidence, severity and direct costs per man-year rates for slips and falls. Backyard collection employees have higher exposure to slips and falls not only because they walk more but also because they are carrying or pushing/pulling containers as they walk and type of surface they have to walk on (e.g., wet grass). Curbside employees also perform a great deal of walking from stop to stop, but because they collect from a larger number

of customers, and hence a larger area, they have increased slip and fall hazards from getting on and off the vehicle, stepping on spilled waste, and stepping on and off the curb.

FIGURE 1-5 presents the injury rates for slips and falls by type of collection. The injury rates were higher for backyard collection than for curbside collection, and there were nearly five times more employees who collect from the curbside and/or alley than from the backyard. The injury rates for the commercial and mechanized collection (e.g., Rapid Rail) were much lower in incidence but high in severity and direct costs.

FIGURE 1-5

INJURY RATES FOR SLIPS AND

FALLS BY TYPE OF COLLECTION

	Curbside & Alley	Backyard	Commercial	Mechanized
OSHA Incidence Rate	12	16	6	2
OSHA Lost Workday Cases Rate	8	13	4	2
OSHA Severity Rate	102	133	128	253
Avg. Workdays Lost Per Lost Workday Case	12.8	10.3	32.6	112
Avg. Direct Cost Per OSHA Recordable Injury	$422	$406	$1,611	$2,257
Direct Cost Per Man-Year	$49	$69	$97	$51
Man-Hours of Exposure	5,000,700	1,067,842	763,475	88,452

The ranking of the incidence rates for the four types of collection follows the employees' exposures to slips and falls. In commercial bulk collection, the employees would have to climb out of the vehicle to position the bulk containers onto the lifters while in mechanized collection, the employee seldom is required to leave the cab. The employee might be exposed to slips and falls in having to turn a wheeled container around,

in changing from right to left hand drive, to unjam the packer panel, or to unload at the landfill. This amounts to very little time walking, and this type of collection only received one slip or fall during this reporting period.

1.5 Type of Injury

The following FIGURE lists the ten most common injuries that occurred from slips and falls in order of highest to lowest frequency. The days lost and direct costs are also given. As can be seen, the two most common injuries by far were sprained ankles and strained backs. In fact, the common injury types were mostly sprains and bruises, although more serious injury types occurred also (e.g., fractures, dislocations, concussions, cuts, etc.).

FIGURE 1-6

TEN MOST COMMON INJURIES

FOR SLIPS AND FALLS

		No. Inj.	%No. Inj.	No. Days Lost	%Days Lost	Direct Costs	%Direct Costs
1.	Sprained ankle	214	22	1,675	17	$68,246	15
2.	Strained back	146	15	2,459	25	117,163	25
3.	Bruised knee	58	6	392	4	21,228	5
4.	Strained knee	47	5	671	7	35,183	7
5.	Bruised back	39	4	241	2	14,885	3
6.	Bruised leg	29	3	192	2	7,683	2
7.	Bruised shoulder	28	3	148	1	5,765	1
8.	Sprained shoulder	20	2	122	1	6,394	1
9.	Sprained foot	19	2	131	1	6,674	1
10.	Bruised chest	18	2	278	3	10,764	2
	Total for slips and falls	957		9,932		$470,540	

Even though sprained ankles were much higher in frequency of occurrence to strained backs, the strained backs resulted in far more days lost and direct costs. The average days lost and direct costs per OSHA recordable injury for the two were:

	Avg. Days Lost	Avg. Direct Costs
Sprained ankle	7.8	$319
Strained back	16.8	$802

2. COUNTERMEASURES FOR SLIPS AND FALLS (PREVENTION METHODS)

Now that the problem of slips and falls is better defined, the various prevention methods available can be weighed for maximum impact, or accident reduction potential. It should also be recognized that the countermeasures discussed can not only make an impact on slips and falls but on other types of accidents as well. For instance, altering the collection methods from curbside to mechanical collection not only reduces the hazard of slips and falls but also of overexertions.

2.1 Employee Training

Hazards recognition training is the main training requirement for reducing slips and falls. As mentioned previously, the outdoors environment that the solid waste collector is exposed to is largely uncontrollable when analyzing prevention methods. Therefore, if hazardous surface conditions cannot be removed, they should be avoided where possible. On the route, the collector can slip off the riding step, fall when walking on ice, water or oil, slip on waste at the back of the truck, step onto a rock or depression, or slip off the curb. Of these conditions, all except for slippery steps or inclement weather can be avoided by looking ahead of where he is stepping and avoiding these known hazardous surface conditions. In particular, the employees need to look where they are stepping when getting off the vehicle. They must be discouraged from jumping off, especially if the vehicle is moving (See IRIS Newsflash, March 1978).

Hazards recognition training for the backyard collector can include altering his routing to the backyard depending on the surface conditions. When the grass is wet early in the morning, he could walk up the driveway part of the way or stay on the walkway to the backyard. Also, if he has a choice between walking on ice on the driveway or on a frosted lawn, the lawn may be less slippery. If forced to walk on inclines or stairways during inclement weather (wet, icy), the employee can slow

down his pace and make sure of his footing. He should avoid walking on the edge of the steps. Also, other studies on slips and falls performed by SAFETY SCIENCES indicate that the most dangerous steps in a flight of stairs are the first and last steps, when the employee is required to change his pace.

The Task/Hazards Analysis can be used to determine the impact of hazards recognition training. Presuming that wet and icy surface conditions are marginally affected by hazards recognition, the major impact of this training would occur in reducing injuries that were caused by such hazardous surface conditions as object on the ground (usually a rock), a hole in the ground (or depression), an oil spot, and waste on the ground. These conditions caused 9% of the slips and falls while the employees were getting on and off the vehicle, 4% of the carrying container, 4% of the standing/walking, 1.3% of the lifting container, .5% of the pushing/pulling container, and .6% of the dumping container. (These are percentages of the total slips and falls injuries.) Therefore, by recognizing and avoiding these hazardous surface conditions, the employers would see a 19% reduction in slips and falls injuries.

Falls cannot be eliminated completely, and therefore, another method for reducing their severity (and therefore their costs) is training the employees on how to fall safely. The natural tendency for a person who is slipping or falling to do is to resist the fall. This can result in severe back injuries from the strain imposed (15% of the injuries). Therefore, falling safely training is simply that the employees relax and roll with the fall and buffering the fall with the shoulders rather than putting out a hand to break the fall. Rolling is important in dissipating the energy from the impact of the fall. Of course, the employees may be reluctant to follow this method if they are handling a container at the same time. They will probably unconsciously attempt to hold the container upright so that the waste does not spill. However, your training should stress the fact that it is more important for the employees to avoid the injury than to avoid spilling the waste.

Another area of employee training, of course, is the specific training on how to perform the task or activity correctly. This is where the Task/Hazards Analysis is invaluable. Referring back to it, the major emphasis should be on getting on and off the vehicle (38% of the slips and falls). Points in the training should emphasize:

1. Do not jump on or off the vehicle.

2. Do not get on or off the vehicle if it is in motion.

3. Avoid stepping on the edges of the steps, where it is the most slippery.

4. Make sure footing is secure when dismounting before releasing the handhold.

5. Use the handhold(s) available during the entire operation of getting on or off the cab or riding step.

6. Look at the ground surface conditions before stepping down and avoid such hazardous conditions as rocks of the ground, potholes, oil spots, drainage grates, meter holes, and spilled waste.

7. Dismounting from the cab should be backwards rather than forwards.

8. Do not step from the riding step or running board onto the edge of the curb.

These training points should have an impact on the slips and falls injuries (50%) while getting on and off the vehicle that did not cite any hazardous surface conditions, since they may be due to improper techniques instead.

Slips and falls training for the other tasks that involved handling containers (e.g., carrying container, lifting container, pushing/pulling container, and dumping container) mainly involves maintaining a firm grip on the container and placing the feet squarely on the surface before lifting or dumping. However, for pushing bulk containers, IRIS recommends that it be done with the aid of a coworker and that they push rather than pull the container. Also, the bulk container should be pushed in increments so that better control over the container is maintained and so the employee does not place himself in an awkward body position.

2.2 Personal Protective Equipment

Slipping and falling occurs at the junction between the employee and the surface, or the shoe sole and the surface. The coefficient of friction generated by the two surfaces determine the likelihood of a slip or fall. Factors that can vary the coefficient of friction are:

1. The degree of wear or slip resistance of the shoes.

2. The shoe sole material (e.g., leather, neoprene, crepe, etc.)

3. The type of surface (e.g., concrete, asphalt, wood, brick, dirt, gravel, etc.)

4. The surface condition (e.g., wet, icy, oily, inclined, etc.)

5. The movement or exertion of the employee (e.g., walking, running, jumping, pushing, pulling, lifting, etc.)

6. And the movement of the surface (e.g., vehicle in motion).

As discussed previously, some of these factors can be avoided through training the employee, but the variableness of the surface conditions cannot always be avoided when inclement weather prevails. Therefore, a very necessary and viable prevention method for reducing slips and falls is providing employees with slip resistant safety shoes. Referring back to the Task/Hazards Analysis, slip resistant safety shoes can have an impact on the accidents that occurred as the result of water, ice and oil on the ground. These resulted in 2.6% of the getting on/off vehicle slips and falls, 9.8% of the carrying container, 7.8% of the standing/walking, 55% of the lifting container, 1.7% of the pushing/pulling container, and 2.1% of the dumping container. Therefore, providing slip resistant safety shoes can have an impact on nearly 30% of the slips and falls occurring.

Once the need for slip resistant shoes is determined, the type of safety shoes which would provide the maximum slip resistance, safety and comfort requires discussion. There is no one all-purpose slip resistant shoe. This is due to the fact that climatic conditions, and therefore surface conditions, vary from place to place, and an organization must choose a degree of slip resistance in the safety shoes to be enough to reduce slips on wet or icy surfaces but not too slip resistant as to cause knee and ankle problems. To protect against dry as well as slippery conditions would therefore require the provision of more than one type of safety shoes, depending on the weather. Many solid waste organizations handle this situation by providing a second pair of safety shoes depending on whether their organization encounters mostly snow or rain. For snow, they provide safety shoes with cleats or strap-on cleats; for rain, they provide rubber boots with high traction. Snow boots

are also available. In any case, any safety shoe chosen must be tested on the route with a few crews before they are widely required.

There are no standards that have been developed for the slip resistance of shoe sole materials. The research that has been conducted only tested the materials on dry surfaces.

Another consideration when determining whether to require slip resistant safety shoes is their cost. Many solid waste organizations are reluctant to require safety shoes for fear that they might have to provide them free of charge to the employees. However, most solid waste organizations temper cost effectiveness with accident reduction potential by providing discounts on the approved shoes or allotting a certain amount of allowance a year per employee towards the purchase of safety shoes.

Providing safety shoes is of no value unless employees are required by rules and regulations to wear them on the job, and this requirement is enforced by their supervisors.

There are also many other safety features to the safety shoes (e.g., steel toe, puncture protection, high ankle, and metatarsal protection) that should be considered at the time of purchase, since they also can be provided for a few dollars more. (Their injury reduction potential and cost effectiveness are discussed in an upcoming special report on personal protective equipment.) Since 22% of the slips and falls resulted in sprained ankles, high ankle support on the safety shoes is recommended. The February 1978 issue of IRIS News showed that there can be at least a reduction of three sprained ankle injuries per 200 employees per year if employees who walk continuously are required to wear safety shoes with ankle support.

Other personal protective equipment does not necessarily prevent slips and falls but may aid in preventing injuries (e.g., bump caps can protect the employee who hits his head against the step when he falls from the riding step). Therefore, their accident reduction potential cannot be easily measured.

2.3 Equipment Modifications

As discussed in previous IRIS reports, step and handhold designs on the collection vehicles should be evaluated by each solid waste organization with the intention of modifying them to allow easier access in and out of the cab

and on and off the riding steps as well as be slip resistant. IRIS recommends that the handholds be long and vertical instead of horizontal so that employees are able to slide their hands up and down on them during the entire procedure of mounting and dismounting. The location of the handhold should also be carefully considered and whether more than one would be better.

One set of standards, the ANSI Z245.1-1975 standard entitled, "Safety Requirements for Refuse Collection and Compaction Equipment", addresses the step and handhold designs of the body but not the chassis:

> *7.3.7 Riding Steps and Grab Handles*
>
> *7.3.7.1 The surface and edges of steps shall have a slip-resistant surface. They shall be self-cleaning or be protected against the accumulation of mud, snow, and ice.* (Many users have installed the diamond patterned, open meshed steps on their vehicles.)
>
> *7.3.7.2 Steps shall be designed to carry a uniformly distributed load of not less than 1000 pounds.*
>
> *7.3.7.3 If steps are provided, they shall be mounted not more than 22 inches above the road surface.* (A lower height for the steps reduces fatigue as well as "missteps" that can cause slips and falls.)
>
> *7.3.7.4 Steps shall have a depth of at least 8 inches and shall provide a minimum of 220 square inches of riding surface area.* (Employees can therefore place their feet securely on the step rather than always use the edge of the step, where it is the most slippery.)
>
> *7.3.7.5 Grab handles shall be provided in conjunction with riding steps and be located so as to provide the employee with a safe and comfortable riding stance. Each grab handle shall be capable of withstanding a pull of at least 500 pounds.*

2.4 Altering Operational Procedures

Operational changes can be major or minor and can be effected immediately or over the course of several years. Most users do not effect operational changes at their solid waste organization simply because of the safety factor. They have to consider cost effectiveness in terms of productivity instead. However, simply to consider productivity and to ignore the

health, safety, and happiness of the employees is not very wise. These factors can also affect productivity. Therefore, when considering operational changes, their effect on the safe working environment of the employees should be considered.

This discussion centers on the effects of certain operational changes on slips and falls. Obviously, the most direct way would be to reduce the employees' exposure to slips and falls. As the injury rates in FIGURE 1-5 indicate, slips and falls can be reduced by the following graduated steps in altering the collection methods:

1. Provide wheeled intermediate containers for backyard collectors.

2. Change from backyard to curbside collection.

3. Change from backyard or curbside collection to semi-mechanical collection (e.g., mobile Toter system).

4. Change from semi-mechanical to fully automated collection.

SECTION II

SECOND QUARTER IRIS USER

INDUSTRY-WIDE DATA

The accidents received by IRIS from 65 users are covered in this section. FIGURE 2-1 gives operational background data on the IRIS users.

FREQUENCY, SEVERITY AND COSTS RATES

FIGURES 2-2 through 2-5 recap the frequency, severity and costs of injuries for this quarter:

- FIGURE 2-2: Summary of Injuries by Frequency, Severity and Costs. Compares the solid waste management industry with the national average for all industries.

- FIGURE 2-3: Comparison of Injury Rates and OSHA Days Lost for All Users. Compares the rates and days lost for the first four quarters of 1976 and the first two quarters of 1977, for each user, in user number order.

- FIGURE 2-4: Comparison of Direct Costs by Reporting Period for All Users. Compares the total costs and cost rates for the first four quarters of 1976 and the first two quarters of 1977, for each user, in user number order.

- FIGURE 2-5: Summary of Accident Factors for Selected Accident Characteristics with Highest Percent of OSHA Recordable Injuries, OSHA Days Lost and Direct Costs.

A few definitions of the terms used in the following FIGURES are:

- OSHA Recordable Injury. Defined by OSHA as a non-first aid injury.

- OSHA Incidence Rate. It is a measure of the frequency of injuries. The OSHA incidence rate is the number of OSHA recordable injuries per 200,000 hours of exposure. The base figure of "200,000 hours" is the standard figure used in OSHA statistics. It is roughly equivalent to 100 full-time employees working a year or 100 man-years (i.e., 100 employees working 40 hours per week for 50 weeks per year).

  OSHA incidence rates can be thought of as being roughly equivalent to the number of injuries that will occur to 100 employees during a year. Therefore, an OSHA incidence rate of 37 means that the organization is having 37 injuries per year for each 100 employees or that, on the average, 1 out of every 3 employees are being injured. The national average OSHA incidence rate for all industries has been around 10 for the last several years.

- Severity Rate. The severity rate is similar to the OSHA incidence rate, except that it reflects the number of OSHA days lost (i.e., workdays lost and light duty days), instead of the number of injuries, per 100 man-years worked. For example, a severity rate of 500 would mean roughly that an organization is losing 500 workdays for every 100 employees per year, or that on the average each employee is losing 5 days a year for on-the-job injuries.

- Direct Costs. Direct costs are normally those for which money was actually expended and include worker's compensation, medical expenses, and wage continuation benefits (e.g., injury leave). There are many indirect costs such as down time, replacement time, lost time by witnesses and supervisors, etc., which are not included in these figures. Indirect costs are estimated to be 5 times the direct costs in cities according to the National Safety Council.

- Average Direct Costs per OSHA Recordable Injury. An average direct cost per OSHA recordable inju of $500 means that on the average each OSHA rec able injury (i.e., a non-first aid case) is costing the organization $500!

- Direct Cost per Man-Year. It shows the cost per 2,000 hours or the average cost per year per employee. A direct cost per man-year of $200 would mean that on the average an organization's injuries are costing $200 per employee per year.

In reviewing these FIGURES, the data for the AVERAGE (shown on the FIGURES as AVG) is the most important because it summarizes the results for all users combined. After examining the AVERAGES, it is important to examine how great the range of rates between users is. Wide ranges are important because they show that it is possible to achieve lower rates of injury under given operating systems and safety programs.

FIGURE 2-1

DESCRIPTION OF USERS BY OPERATIONAL CHARACTERISTICS

User Number	M=Municipal P=Private	Geograph. Area	No. of Employees	Point of Collection: M=Mechanical A=Alley BY=Backyard w/o intermed. can BYT=Backyard-Tub BYC=Backyard-Cart CS=Curbside	Type of Shift	Type of Service Provided			
						Coll. Crew Size(s)			Disposal
						Resid.	Comm.	Resid. & Comm.	L=Landfill I=Incinerator T=Trans. Stn.
101	M	South	325	CS/A	T/F	4	4		L
103	M	Midwest	80	BY/CS/A	T	3			
109	M	Midwest	500	BY/BYC	F	4,3			
111	M	West	280	CS	T	2			L
113	P	Midwest	33	CS	T	1,2	1	2	
115	M	South	300	CS/A	T/F	3	1,2		L,I
125	M	South	650	CS	T		1	3	L,I
133	M	Northwest	86	CS/A/BY	T	2	1,2		L
136	M	South	140	M/A	F	3,1	1		L
140	M	South	844	CS	T	3			
146	M	South	295	CS/A	T	1,2,3	1,2		L,T
148	M	Northeast	267	CS	T			4	
149	M	Midwest	65	CS	T	2	2		
152	M	Midwest	63	CS	T	2			

FIGURE 2-1 (Continued)

OPERATIONAL CHARACTERISTICS CONTINUED

User Number	M=Municipal P=Private	Geograph. Area	No. of Employees	Point of Collection: M=Mechanical A=Alley BY=Backyard w/o intermed. can BYT=Backyard-Tub BYC=Backyard-Cart CS=Curbside	Type of Shift	Type of Service Provided			
						Coll. Crew Size(s)			Disposal
						Resid.	Comm.	Resid. & Comm.	L=Landfill I=Incinerato T=Trans. Str
157	M	West	203	CS	T	2	2	2	L,T
161	M	Midwest	125	CS/A	T	3,1			L
170	M	South	1481	CS/BYC/A	T	1,2,3,4,5	2,3,4,5		T
171	M	Midwest	370	A	T/F	3			
172	M	West	700	M/CS/A	T/F	1,3,2			L
178	M	South	629	CS	T	3	2		L,I
179	M	Northeast	532	CS	T	3	3		I,T
181	M	Midwest	278	BY	T	4			L
182	M	Northeast	470	CS	T	3			L
183	M	Midwest	308	CS	T	3	2		
186	M	South	297	CS	T	3	3		L
191	M	South	177	CS/A	T/F	3	1		L
197	M	West	86	CS	T	2	2,1	2	
201	M	Northeast	120	CS	T	3			

FIGURE 2-1 (Continued)

OPERATIONAL CHARACTERISTICS CONTINUED

User Number	M=Municipal P=Private	Geograph. Area	No. of Employees	Point of Collection: M=Mechanical A=Alley BY=Backyard w/o intermed. can BYT=Backyard-Tub BYC=Backyard-Cart CS=Curbside	Type of Shift	Type of Service Provided			
						Coll. Crew Size(s)			Disposal
						Resid.	Comm.	Resid. & Comm.	L=Landfill I=Incinerator T=Trans. Stn.
204	M	West	52	CS/A/M	F	1,3	1,3		L
207	M	West	205	BYC	T	3	2		
210	M	West	15	CS	T			1,2	
211	M	West	40	CS/A	T	2	2		L
212	M	West	130	CS/A	F			2	
215	M	South	60	CS/BY/BYT	T/F	3	1		
217	M	South	820	CS/A/BY	F	1,2,3			L,T
221	M	West	210	CS	T	2			
226	M	South	87	CS	T	3	1,3		
235	M	South	125	BYT/A/CS	T	3	3		L
236	M	South	103	CS	T/F	3	1		L
237	M	Midwest	90	A/BYC	T/F			3	
242	M	South	101	CS/BY/BYT/A	T/F	3	3		L,T
244	M	West	30	BYT/BYC	T	2	1,2		

FIGURE 2-1 (Continued)

OPERATIONAL CHARACTERISTICS CONTINUED

User Number	M=Municipal P=Private	Geograph. Area	No. of Employees	Point of Collection: M=Mechanical A=Alley BY=Backyard w/o intermed. can BYT=Backyard-Tub BYC=Backyard-Cart CS=Curbside	Type of Shift	Type of Service Provided			
						Coll. Crew Size(s)			Disposal
						Resid.	Comm.	Resid. & Comm.	L=Landfill I=Incinerat T=Trans. St
260	M	West	168	CS/BYT/A/M	T	1,2	2,3		L
261	M	Midwest	8	CS/A	T	3			L
265	M	West	200	CS/BYT/BYC	T	1,2	2		L,T
272	M	Northeast	127	CS	T	3	3		L,I
275	M	Northeast	40	CS	T	3			
283	M	South	72	CS/A	T/F	2	3,1		L,T
285	M	Midwest	79	A/BYT/BYC	T	3			
286	M	West	8		F				L,T
292	M	Northwest	225	CS/A/BYT/BYC	F	1,3	2		L
295	M	South	179	CS/BY	T	4	2		L
296	M	West	43	CS/A/BY	F	1	2,1		
299	M	Northeast	113	CS	T	3	3		L
316	M	Northeast	475	CS/A/BYT	F	2,3	2,3		
318	M	Northwest	48	A/CS	F	3	3	3	L

FIGURE 2-1 (Continued)

OPERATIONAL CHARACTERISTICS CONTINUED

User Number	M=Municipal P=Private	Geograph. Area	No. of Employees	Point of Collection: M=Mechanical A=Alley BY=Backyard w/o intermed. can BYT=Backyard-Tub BYC=Backyard-Cart CS=Curbside	Type of Shift	Type of Service Provided			
						Coll. Crew Size(s)			Disposal
						Resid.	Comm.	Resid. & Comm.	L=Landfill I=Incinerator T=Trans. Stn.
323	M	Northeast	171	CS	T			3	L
324	P	Midwest	17	CS/A/BYT/BYC	T			1,2	
325	M	Northwest	45	CS/A	F	2,1	1,2,3		L
326	M	South	23	CS	T	3	3		L
327	M	South	140	CS	T	3	2,3		I,L
328	M	Midwest	33	CS	T/F	2,1	2		T
329	P	West	20	CS	T	3	2,1		
330	M	South	60	A/CS	F	3	3	3	L
331	M	Midwest	35	CS/A	T	3			
332	P	West	14	-	F		2		
333	M	Northeast	43	BY	T	3			
335	P	Northeast	24	CS	T	3	1		L
336	P	Midwest	51	-	T		2,1		
337	M	Northeast	405	CS	F	3			

OPERATIONAL CHARACTERISTICS CONTINUED

User Number	M=Municipal P=Private	Geograph. Area	No. of Employees	Point of Collection: M=Mechanical A=Alley BY=Backyard w/o intermed. can BYT=Backyard-Tub BYC=Backyard-Cart CS=Curbside	Type of Shift	Type of Service Provided			
						Coll. Crew Size(s)			Disposal
						Resid.	Comm.	Resid. & Comm.	L=Landfill I=Incinerat T=Trans. St
338	M	Northeast	405	CS	F	3			
339	M	Northeast	405	CS	F	3			
340	M	Midwest	318	CS	T	3			
341	M	West	35	CS/A	T	2	2,1		
342	M	Midwest	25	CS	T	1	2		L
343	M	West	17	CS	F	1			
344	M	Midwest	40	CS/A	F	2,3	1		
345	M	Midwest	38	-	F				L,I,T
346	P	Midwest	70	A/CS	T	2		2	L
347	M	Northeast	60	CS	T			4	T
348	M	West	35	CS/A	T	1,2,3			
349	P	Midwest	40	CS/BYT	T	2	1		
350	M	West	57	CS	T	2	2	2	
351	M	West	10	CS/A	T	2	1	3	
352	M	Midwest	52	CS/A	F	3	3		

FIGURE 2-1 (Continued)

OPERATIONAL CHARACTERISTICS CONTINUED

User Number	M=Municipal P=Private	Geograph. Area	No. of Employees	Point of Collection: M=Mechanical A=Alley BY=Backyard w/o intermed. can BYT=Backyard-Tub BYC=Backyard-Cart CS=Curbside	Type of Shift	Type of Service Provided			
						Coll. Crew Size(s)			Disposal
						Resid.	Comm.	Resid. & Comm.	L=Landfill I=Incinerator T=Trans. Stn.
353	M	Midwest	20	CS	F			3	
354	M	Northeast	30	BYT	T	3			
355	P	Midwest	70	CS/BY	T	2	1,2		
356	P	Northeast	21	-	F		1		
358	M	South	18	BYC/CS	T	3	2		
359	P	Midwest	71	CS	T	2	1,2		
360	P	Northwest	30	-					L,T
361	M	West	44	-	F				L,T
362	M	Northeast	76	CS	T	4,3			
363	M	South	75	CS/A/BY	T	1,4	1		

FIGURE 2-2

SUMMARY OF INJURIES BY FREQUENCY, SEVERITY AND COSTS

FREQUENCY

- There were 1,485 cases reported by 65 of the IRIS users on-line: 222 first aid cases, 537 non-fatal cases without lost workdays, 723 lost workday cases and 3 permanent disability cases. Total man-hours for this quarter were 6,079,504.

- The AVERAGE OSHA incidence rate was 42 for this quarter. This means that over four out of every ten solid waste industry employees will experience a non-first aid injury a year. The national rate for all industries was 10.4. Therefore, the solid waste industry is experiencing almost four times as many injuries as the average industry.

- IRIS users ranged in frequency rates from User No. 103 which was experiencing 2 injuries per employee per year, to User No. 272 which was experiencing 7 injuries per 100 employees per year.

SEVERITY

(Days lost given are not final. These figures reflect what was received from IRIS users by September 30, 1977 and may be gross underestimates. For example, in the months since the publication of the first quarter Accident Trends for 1976, the OSHA severity rate has increased from 269 to 413, and not all cases are final yet.)

- So far, 726 cases this quarter incurred 7,055 workdays lost and light duty days.

- 49% of the total cases resulted in workdays lost and/or light duty days. The national average for all industries is 33%. This means that the solid waste industry has almost 1½ times as many lost workday injuries as the average industry.

- The AVERAGE OSHA severity rate was 232. This means that on the average, each employee is

losing 2.3 days per year for injuries. One user's rate was as high as 20 days lost per year per employee; several are losing zero days a year per employee.

- On the AVERAGE, each lost workday case resulted in 9.72 workdays lost so far.

DIRECT COSTS

(Costs given are not final. These figures reflect what was received from IRIS users by September 30, 1977, and may be gross underestimates. For example, first quarter of 1976's AVERAGE cost per OSHA recordable injury has gone up from $296 to $522.)

- Total direct costs so far for injuries that occurred during the first quarter was $392,793.

- The AVERAGE cost per OSHA recordable injury was $311.

- The AVERAGE cost per man-year was $130. This means that the average solid waste injury (non-first aid) cost $130 per full-time employee per year so far.

Starting: January, 1976

FIGURE 2-3

COMPARISON OF INJURY RATES AND OSHA DAYS LOST FOR ALL USERS

USER	OSHA INCIDENCE RATE QTR 1	QTR 2	QTR 3	QTR 4	SEVERITY RATE QTR 1	QTR 2	QTR 3	QTR 4	AVERAGE OSHA DAYS LOST QTR 1	QTR 2	QTR 3	QTR 4
101	12	33	44	20	47	387	101	145	6.50	27.00	8.33	21.14
103				106				365				3.44
109	36	48	50	22	195	174	197	126	8.03	8.15	7.65	6.27
111	68	76	79	54	1089	1182	667	292	23.39	22.05	11.59	14.62
113				28				0				0.00
115				29				160				10.55
125	31	35	42	20	876	370	560	446	35.54	13.03	16.72	32.48
133				12				86				10.50
136	0	0	0		0	0	0		0.00	0.00	0.00	
140	31	55			347	673			15.37	16.56		
146	26	21	34	36	537	136	142	250	66.50	20.60	9.82	12.93
148		23	5	18		149	0	61		12.86	0.00	9.25
149				125				1146				13.22
152				87				355				8.14
157				16				90				6.29
161	13	42	63	54	0	33	98	38	0.00	1.60	5.00	1.11
170				23				172				9.64
171	44	62	58	47	209	226	291	625	9.58	5.96	10.53	19.58
172	50	55	69	38	477	1104	439	590	14.28	27.51	11.23	32.79
178				18				106				11.07
179			13	29			142	431			19.17	24.21
181	44	49	66	51	369	147	261	427	11.48	4.26	6.89	13.04
182				12				22				4.60
183				38				161				6.31
186	13	24	24	23	69	276	101	108	12.25	22.00	8.22	7.36
191	57	45	93	47	188	149	230	505	4.00	5.11	4.62	15.73
197			38	31			317	1232			10.00	49.00
201				8				242				61.00
204	79	134	47	30	342	83	55	273	13.00	8.00	7.00	12.00
207	78	96	71	97	579	249	618	350	10.30	5.35	13.19	8.53
210	104	0	48	148	467	0	1332	3142	9.00	0.00	27.50	29.80
211	9	67	34	63	539	278	93	211	62.00	4.71	2.75	3.86
212	79	44			759	483			9.65	11.00		

FIGURE 2-3 (Continued)

USER	OSHA INCIDENCE RATE QTR 1	QTR 2	QTR 3	QTR 4	SEVERITY RATE QTR 1	QTR 2	QTR 3	QTR 4	AVERAGE OSHA DAYS LOST QTR 1	QTR 2	QTR 3	QTR 4
215	0	0	22	0	0	0	1587	0	0.00	0.00	72.67	0.00
217		43	59	43		192	152	70		11.22	12.38	8.67
221			10	76			47	993			4.50	13.07
226				18				0				0.00
235	23	56	40	36	113	0	0	51	6.00	0.00	0.00	2.80
236	89	103	73	57	1492	663	248	51	18.53	8.86	6.00	1.78
237	15	33	46	35	35	150	92	128	3.50	6.40	3.14	4.83
242	4	0	0	5	100	0	0	18	25.00	0.00	0.00	3.50
244	93	56	42	56	170	197	182	183	2.75	3.50	6.50	6.50
260	68	54	103	117	759	513	1178	1296	19.42	16.20	17.64	14.26
261	48	0	0	48	145	0	0	429	3.00	0.00	0.00	9.00
265	34	46	65	70	249	301	403	522	8.64	7.80	7.30	10.55
272	11	15	19	40	243	11	98	150	32.00	1.50	6.50	6.83
275		59	59	93		629	78	384		10.67	2.67	9.25
283	12	50	50	20	0	133	117	10	0.00	8.00	3.50	2.00
285	7	0			13	0			2.00	0.00		
286	0	0	0	39	0	0	0	0	0.00	0.00	0.00	0.00
292	3	10	7	5	284	19	14	7	86.00	4.33	2.75	3.00
295	17	20	19	29	64	20	101	212	4.75	2.00	15.50	13.33
296	19	75	57	55	476	2911	218	1765	25.00	51.50	5.75	32.17
299				44				155				28.00
316		53	60	29		606	425	336		17.05	12.82	18.14
318			78	46			2431	346			31.09	7.57
323				9				56				13.00
324		78	70	46		0	234	23		0.00	3.33	1.00
325		43	47	46		135	347	732		4.75	13.00	18.67
326			0	18			0	36			0.00	2.00
328				0				0				0.00
329		37	17	50		37	101	17		2.00	6.00	1.00
330		25	70	44		83	78	748		5.00	2.50	20.60
331			0	0			0	0			0.00	0.00
333			66	99			33	1219			2.00	37.00
336				23				62				2.67

FIGURE 2-3 (Continued)

USER	OSHA INCIDENCE RATE QTR 1	QTR 2	QTR 3	QTR 4	SEVERITY RATE QTR 1	QTR 2	QTR 3	QTR 4	AVERAGE OSHA DAYS LOST QTR 1	QTR 2	QTR 3	QTR 4
337			44	38			410	262			9.29	6.92
338			32	25			246	191			7.78	7.57
339			23	35			118	198			5.12	5.67
340				29				691				66.37
341			77	58			1367	737			19.50	12.75
343			50	75			99	50			2.00	2.00
344				11				80				7.00
345				10				632				65.00
346				29				95				3.25
347				20				20				3.00
348				34				192				8.50
349				49				121				10.00
350				42				96				3.00
351				51				101				2.00
353				35				122				7.00
354				129				388				9.00
355				33				16				1.50
358				88				4230				145.00
359				57				447				12.43
361				23				0				0.00
362				4				301				72.00
363				6				0				0.00
AVG.	34	44	45	33	413	386	292	281	17.34	14.48	11.60	14.52

FIGURE 2-3 (Continued)

COMPARISON OF INJURY RATES AND OSHA DAYS LOST FOR ALL USERS

Starting: January, 1977

USER	OSHA INCIDENCE RATE QTR 1	QTR 2	QTR 3	QTR 4	SEVERITY RATE QTR 1	QTR 2	QTR 3	QTR 4	AVERAGE OSHA DAYS LOST QTR 1	QTR 2	QTR 3	QTR 4
101	17	25			60	67			13.00	23.00		
103	88	208			175	2035			5.60	14.29		
109	14	18			79	252			5.83	16.26		
111	38	47			346	205			13.65	7.68		
113	28	0			339	0			24.00	0.00		
115	32				516				19.37			
125	26	26			301	188			13.81	9.20		
133	38	30			608	141			31.60	6.17		
146	23	15			393	70			30.30	8.00		
148	13	10			163	21			24.25	3.25		
149	124	145			1197	835			17.86	9.20		
152	58	76			283	467			8.80	10.57		
157	48				97				4.18			
161	58				318				13.67			
170	31	42			276	206			10.19	6.50		
171	42	51			291	358			9.16	8.16		
172	52	64			237	220			13.00	11.94		
178	4				65				15.50			
179	36				426				17.05			
181	44	37			245	311			9.67	8.33		
182	15	25			86	154			8.90	7.36		
183	64	72			162	256			4.82	5.24		
186	35	17			158	41			7.31	3.87		
191	65	87			415	277			8.24	4.18		
197	25	12			130	129			5.25	10.50		
201	25	47			53	317			6.50	16.00		
204	24				0				0.00			
207	84	58			457	313			12.47	9.12		
210	22	92			22	369			1.00	5.00		
211	88	37			399	73			8.33	3.33		
215	0	0			0	0			0.00	0.00		
217	41	55			41	48			5.40	4.67		
221	90	72			1269	1433			14.18	20.69		

FIGURE 2-3 (Continued)

USER	OSHA INCIDENCE RATE QTR 1	QTR 2	QTR 3	QTR 4	SEVERITY RATE QTR 1	QTR 2	QTR 3	QTR 4	AVERAGE OSHA DAYS LOST QTR 1	QTR 2	QTR 3	QTR 4
226	35				191				11.00			
235	46	47			502	352			12.91	7.57		
236	61	62			263	316			7.82	18.67		
237	45	24			683	56			33.40	4.67		
242	0				0				0.00			
244	54	94			2871	336			105.50	4.17		
260	80				714				14.24			
265	54	84			339	466			10.40	7.77		
272	11	7			11	4			1.50	1.00		
275	62	0			591	0			14.25	0.00		
283	24				34				2.33			
286	0	37			0	0			0.00	0.00		
292	9	14			195	16			26.17	7.00		
296	27	8			36	220			2.00	26.00		
299	72	93			144	236			5.20	8.71		
316	46	51			759	618			23.15	18.27		
318	33	38			273	876			13.67	27.40		
323	17				200				27.00			
324	23	0			680	0			29.00	0.00		
325	73	64			612	185			9.20	4.14		
326	51	16			2700	0			52.67	0.00		
328	0	121			0	1048			0.00	13.00		
329	17	48			0	0			0.00	0.00		
330	21	20			332	13			23.50	1.00		
331	30	15			0	0			0.00	0.00		
333	49	16			0	0			0.00	0.00		
336	16	15			23	15			3.00	2.00		
337	35	26			216	293			7.44	11.37		
338	33	18			240	89			8.12	4.80		
339	45	54			329	248			7.86	6.38		
340	36	48			280	302			18.55	12.69		
341	101				1885				21.83			
343	72	96			24	72			1.00	1.50		

FIGURE 2-3 (Continued)

USER	OSHA INCIDENCE RATE QTR 1	QTR 2	QTR 3	QTR 4	SEVERITY RATE QTR 1	QTR 2	QTR 3	QTR 4	AVERAGE OSHA DAYS LOST QTR 1	QTR 2	QTR 3	QTR 4
344	69	49			552	312			8.00	6.40		
345	59	40			285	20			5.80	1.00		
346	118				213				4.14			
347	34	59			68	388			3.33	9.83		
348	62	50			718	249			11.50	8.33		
349	94	46			1175	0			25.00	0.00		
350	77	50			1902	299			43.50	7.50		
351	52	153			0	612			0.00	6.00		
352	125				589				33.00			
353	18				200				11.00			
354	83				0				0.00			
355	11	48			6	263			1.00	16.33		
358	58	27			232	0			4.00	0.00		
361	11				0				0.00			
362	21	32			267	394			15.75	20.00		
363	33	17			98	0			5.00	0.00		
AVG.	36	42			284	232			13.09	9.72		

Starting: January, 1976

FIGURE 2-4

COMPARISON OF DIRECT COSTS BY REPORTING PERIOD FOR ALL USERS

USER	TOTAL INJURY COSTS QTR 1	QTR 2	QTR 3	QTR 4	AVG. COST PER OSHA REC. INJ. QTR 1	QTR 2	QTR 3	QTR 4	AVERAGE COST PER MAN YEAR QTR 1	QTR 2	QTR 3	QTR 4
101	4,210	29,631	5,735	5,260	386	986	130	263	51	326	57	51
103				3,627				203				240
109	13,513	12,994	19,851	12,958	312	213	275	345	112	103	138	78
111	59,293	42,034	30,744	14,888	1,234	764	487	346	836	577	384	185
113				102				51				14
115				6,895				328				95
125	50,760	25,734	47,226	36,174	832	357	497	753	260	123	208	150
133				638				212				26
136	0	0	0		0	0	0		0	0	0	
140	39,842	69,843			711	688			219	378		
146	9,041	5,442	3,060	8,171	475	340	117	291	121	72	40	105
148		3,577	110	2,092		255	36	190		59	1	34
149				4,202				323				404
152				3,365				240				209
157				2,977				372				61
161	135	815	1,526	683	18	80	93	48	5	33	59	26
170				22,212				325				74
171	3,582	6,376	9,486	21,455	148	163	237	613	65	100	137	285
172	27,167	58,431	27,413	39,375	393	749	274	667	197	411	188	252
178				7,107				263				48
179			8,661	35,411			412	737			53	217
181	11,510	5,081	9,833	15,586	391	153	209	432	176	76	138	221
182				1,032				82				9
183				7,505				312				119
186	1,295	8,021	2,950	3,550	143	471	163	208	18	111	40	47
191	1,475	1,685	2,101	4,879	86	120	70	304	49	54	65	142
197			2,710	64,080			451	12,816			171	4,028
201				2,571				1,285				102
204	2,481	517	300	2,142	275	39	50	535	217	53	23	162
207	4,523	9,636	12,908	6,786	141	235	403	150	110	224	288	146
210	1,445	0	3,218	9,667	361	0	1,609	1,381	374	0	779	2,038
211	794	1,987	600	1,687	758	248	145	195	68	167	50	131
212	14,297	7,138			621	549			488	241		

FIGURE 2-4 (Continued)

USER	TOTAL INJURY COSTS QTR 1	QTR 2	QTR 3	QTR 4	AVG. COST PER OSHA REC. INJ. QTR 1	QTR 2	QTR 3	QTR 4	AVERAGE COST PER MAN YEAR QTR 1	QTR 2	QTR 3	QTR 4
215	0	0	5,725	0	0	0	1,908	0	0	0	416	0
217		87,664	36,713	18,317		956	259	163		415	155	70
221			1,045	14,110			253	491			27	382
226				60				20				3
235	1,185	725	240	886	197	48	21	88	44	26	8	32
236	12,768	9,550	8,223	1,442	608	329	357	80	541	340	261	45
237	604	1,813	1,583	1,925	201	259	143	218	30	85	66	84
242	6,877	0	0	278	6,877	0	0	139	274	0	0	7
244	706	904	748	962	117	226	249	240	109	127	104	135
260	2,317	5,620	8,797	17,683	110	330	258	442	75	178	266	518
261	159	0	0	960	159	0	0	960	76	0	0	457
265	2,820	8,216	14,019	9,500	214	455	519	306	74	211	335	213
272	1,861	109	1,224	1,444	620	27	244	131	70	4	46	52
275		1,437	272	1,297		239	45	144		141	26	134
283	119	1,346	1,890	173	59	147	210	43	7	74	105	8
285	61	0			61	0			4	0		
286	0	0	0	80	0	0	0	80	0	0	0	30
292	7,327	894	483	376	3,663	127	96	94	121	13	6	4
295	911	578	1,172	5,257	177	96	195	477	30	19	38	139
296	1,982	16,786	1,256	10,471	991	2,098	209	1,745	188	1,581	119	957
299				2,010				125				55
316		37,757	24,016	21,089		629	338	602		335	203	177
318			14,061	4,258			1,278	593			999	277
323				893				205				19
324		92	491	62		30	163	31		23	114	14
325		2,159	4,736	5,701		359	676	806		153	316	372
326			0	91			0	91			0	16
328				0				0				0
329		153	378	194		66	338	64		28	63	32
330		1,053	480	2,612		351	53	435		87	37	189
331			0	0			0	0			0	0
333			223	2,044			55	340			36	336
336				60				20				4

FIGURE 2-4 (Continued)

USER	TOTAL INJURY COSTS QTR 1	QTR 2	QTR 3	QTR 4	AVG. COST PER OSHA REC. INJ. QTR 1	QTR 2	QTR 3	QTR 4	AVERAGE COST PER MAN YEAR QTR 1	QTR 2	QTR 3	QTR 4
337			11,442	7,664			817	638			360	241
338			6,431	4,968			714	709			226	178
339			3,152	6,265			394	522			90	182
340				15,012				682				195
341			9,864	4,848			896	597			691	350
343			341	453			170	151			84	113
344				318				318				36
345				1,670				1,670				162
346				619				154				45
347				331				110				22
348				1,172				390				132
349				729				182				88
350				481				120				51
351				64				64				32
353				238				119				41
354				1,193				198				256
355				165				27				9
358				3,953				1,317				1,153
359				2,061				187				105
361				40				20				4
362				1,934				1,934				80
363				31				31				1
AVG.	285,060	465,798	347,437	525,521	522	510	324	436	180	223	147	144

FIGURE 2-4 (Continued)

COMPARISON OF DIRECT COSTS BY REPORTING PERIOD FOR ALL USERS

Starting: January, 1976

USER	TOTAL INJURY COSTS QTR 1	QTR 2	QTR 3	QTR 4	AVG. COST PER OSHA REC. INJ. QTR 1	QTR 2	QTR 3	QTR 4	AVERAGE COST PER MAN YEAR QTR 1	QTR 2	QTR 3	QTR 4
101	2,808	4,636			147	136			25	33		
103	2,399	39,823			167	1,137			150	2,362		
109	9,361	30,631			356	968			53	175		
111	19,743	11,102			658	284			249	134		
113	1,286	0			643	0			181	0		
115	17,674				734				247			
125	26,994	16,606			442	259			113	66		
133	9,022	2,336			902	292			346	88		
146	21,552	4,187			1,197	347			279	52		
148	3,669	554			458	92			61	9		
149	7,598	3,761			584	235			727	341		
152	3,265	4,585			359	382			210	289		
157	3,006				130				63			
161	3,770				251				146			
170	32,198	29,022			353	237			110	99		
171	10,280	13,837			311	314			130	159		
172	23,439	15,074			282	139			147	89		
178	3,233				538				22			
179	22,753				392				142			
181	10,171	11,531			328	427			143	159		
182	3,337	5,931			222	228			32	56		
183	6,558	6,981			156	162			100	117		
186	4,388	1,628			168	125			59	21		
191	4,182	2,910			190	100			124	87		
197	1,124	1,458			281	729			69	89		
201	741	1,911			123	159			30	75		
204	350				116				27			
207	6,857	4,792			175	165			147	96		
210	80	1,767			80	353			17	325		
211	3,306	547			300	109			264	39		
215	0	0			0	0			0	0		
217	11,798	12,204			109	75			44	41		
221	24,148	31,783			706	1,059			635	758		

FIGURE 2-4 (Continued)

USER	TOTAL INJURY COSTS QTR 1	QTR 2	QTR 3	QTR 4	AVG. COST PER OSHA REC. INJ. QTR 1	QTR 2	QTR 3	QTR 4	AVERAGE COST PER MAN YEAR QTR 1	QTR 2	QTR 3	QTR 4
226	1,276				212				73			
235	6,068	9,807			466	700			214	325		
236	12,041	11,395			602	517			367	321		
237	13,784	902			1,253	150			564	36		
242	0				0				0			
244	15,247	1,799			3,811	257			2,074	241		
260	6,984				258				206			
265	6,452	8,258			258	196			140	165		
272	160	80			53	40			6	2		
275	1,872	0			312	0			193	0		
283	473				94				22			
286	0	20			0	20			0	7		
292	3,533	1,333			504	111			43	15		
296	440	1,364			146	1,364			39	115		
299	2,275	2,317			87	96			63	89		
316	50,532	41,512			918	628			424	318		
318	1,566	5,393			313	898			104	344		
323	2,676				380				66			
324	312	50			312	0			73	11		
325	8,345	3,049			758	304			555	194		
326	34,976	4			11,658	4			5,977	0		
328	0	644			0	214			0	259		
329	40	102			40	34			6	16		
330	1,749	139			583	46			123	9		
331	56	34			28	34			8	4		
333	79	43			26	43			12	7		
336	40	40			20	20			3	3		
337	5,740	8,350			521	1,043			185	269		
338	4,213	1,622			468	324			155	59		
339	6,495	7,744			433	430			194	231		
340	13,006	7,610			500	237			178	113		
341	18,009				1,286				1,295			
343	154	479			51	119			37	115		

FIGURE 2-4 (Continued)

USER	TOTAL INJURY COSTS QTR 1	QTR 2	QTR 3	QTR 4	AVG. COST PER OSHA REC. INJ. QTR 1	QTR 2	QTR 3	QTR 4	AVERAGE COST PER MAN YEAR QTR 1	QTR 2	QTR 3	QTR 4
344	2,687	1,265			447	253			308	123		
345	1,672	322			278	80			164	31		
346	1,101				68				81			
347	662	2,067			132	229			45	135		
348	3,870	1,086			645	217			402	108		
349	2,833	181			354	45			332	20		
350	6,595	1,907			942	381			720	189		
351	20	800			20	266			10	407		
352	3,593				256				320			
353	252				252				45			
354	206				51				42			
355	108	3,199			54	355			5	171		
358	495	8			247	8			143	2		
361	20				20				2			
362	2,888	9,407			577	1,175			122	370		
363	715	129			143	43			46	7		
AVG.	547,400	394,058			420	311			152	129		

FIGURE 2-5

SUMMARY OF ACCIDENT FACTORS FOR SELECTED ACCIDENT CHARACTERISTICS WITH HIGHEST PERCENT OF OSHA RECORDABLE INJURIES OSHA DAYS LOST AND DIRECT COSTS

Type of Characteristic	Factors with the:		
	Highest % of OSHA Recordable Injuries	Highest % of OSHA Days Lost	Highest % of Direct Costs
Activity	Lifting or dumping container - 39% Getting off equipment - 8% Standing or walking - 7%	Lifting or dumping container - 40% Getting off equipment - 14% Carrying container - 8%	Lifting or dumping container - 38% Getting off equipment - 12% Carrying container - 7%
Accident Type	Overexertion involving container - 19% Struck by waste - 5% Slip on same level - 5%	Overexertion involving container - 29% Fall to a different level - 8% Slip on same level - 8%	Overexertion involving container - 27% Vehicle accident - 12% Slip on same level - 7%
Accident Site	On collection route at back of truck - 32% On collection route at curb - 19% On collection route in customer's yard - 11%	On collection route at back of truck - 31% On collection route at curb - 24% On collection route in customer's yard - 11%	On collection route at back of truck - 34% On collection route at curb - 21% On collection route in customer's yard - 11%
Nature of Injury	Sprain or strain - 41% Cut or puncture - 21% Bruise - 17%	Sprain or strain - 58% Bruise - 14% Fracture - 8%	Sprain or strain - 55% Bruise - 13% Amputation - 8%
Part of Body	Back - 18% Leg - 10% Eyes - 8%	Back - 31% Knee - 8% Foot - 7%	Back - 29% Leg - 13% Knee - 8%

Accident Trends

3rd Quarter 1977

IRIS

EXHIBIT 8

ACCIDENT TRENDS

IN THE SOLID WASTE MANAGEMENT INDUSTRY

SPECIALIZED COLLECTION ACCIDENTS

QUARTER: JULY 1 TO SEPTEMBER 30, 1977

DEVELOPED BY SAFETY SCIENCES, DIVISION OF WSA INC.,
FOR THE U.S. ENVIRONMENTAL PROTECTION AGENCY
OFFICE OF SOLID WASTE MANAGEMENT PROGRAMS
UNDER CONTRACT NO. 68-03-0231

safety sciences Division of WSA Inc., 11772 Sorrento Valley Road
San Diego, CA 92121 (714) 755-9359 & 452-1010

Accident Trends in the Solid Waste Management Industry is developed quarterly using data from IRIS (the Injury Reporting and Information System for Solid Waste Management). Accident Trends is designed to summarize and discuss the data from all IRIS users and to provide data and conclusions which affect the industry as a whole. A companion volume, the QSMR (Quarterly Safety Management Report), is developed individually for each IRIS user who reported injuries during the quarter. Each QSMR concentrates only on the injuries of the individual IRIS user for which it is prepared.

IRIS is currently made up of 65 users. All possible care is taken to insure data quality. The nature of the data and the reports, however, precludes complete accuracy. Not all cases are closed by the end of the quarter. These accidents continue to be monitored. Occasionally, full lost time and cost data is not available. Consequently, the totals for these categories may be underestimates. A concerted effort is made to correct the lost time and cost figures and improve IRIS collection methods. The recommendations and countermeasures presented are suggestions that must be evaluated in terms of individual user's needs.

The purpose of this and other IRIS publications is to disseminate new ideas and alternative methods in the solid waste field. IRIS serves as a clearinghouse in this regard, but does not promote or endorse any method or product. Implementation of QSMR suggestions should be done only after careful evaluation by each user and at each user's discretion.

ACCIDENT TRENDS

IN THE SOLID WASTE MANAGEMENT INDUSTRY

SPECIALIZED COLLECTION ACCIDENTS

QUARTER: JULY 1, 1977 THROUGH SEPTEMBER 30, 1977

TABLE OF CONTENTS

		Page
INTRODUCTION		iv
I.	DISCUSSION OF SPECIALIZED COLLECTION ACCIDENTS AND PREVENTION METHODS	1-1
	1. Commercial Collection	1-2
	1.1 Accident Types	1-2
	1.2 Countermeasures	1-4
	2. Brush Collection	1-14
	2.1 Accident Types	1-15
	2.2 Countermeasures	1-20
	3. Bulky Waste Collection	1-21
	3.1 Accident Types	1-21
	3.2 Countermeasures	1-22
II.	THIRD QUARTER IRIS USER INDUSTRY-WIDE DATA	2-1

LIST OF FIGURES

		Page
FIGURE 1-1	Injury Rates for Specialized Collection	1-1
FIGURE 1-2	Common Commercial Collection Crew Accidents	1-4
FIGURE 1-3 to 1-5	Injury Rates for Commercial Collection for All Users	1-5
FIGURE 1-6	Common Brush Collection Crew Accidents	1-15
FIGURE 1-7 to 1-9	Injury Rates for Brush Collection for All Users	1-17
FIGURE 1-10	Common Bulky Waste Collection Crew Accidents	1-21
FIGURE 1-11 to 1-13	Injury Rates for Bulky Waste Collection for All Users	1-23
FIGURE 2-1	Description of Users by Operational Characteristics	2-4
FIGURE 2-2	Summary of Injuries by Frequency, Severity, and Costs	2-11
FIGURE 2-3	Comparison of Injury Rates and OSHA Days Lost for All Users	2-13
FIGURE 2-4	Comparison of Direct Costs by Reporting Period for All Users	2-19
FIGURE 2-5	Summary of Accident Factors for Selected Accident Characteristics with Highest Percent of OSHA Recordable Injuries, Workdays Lost and Direct Costs	2-25

INTRODUCTION

This is the Accident Trends report for the third quarter of 1977 (July 1 to September 30). This report is divided into two sections, a discussion of the special feature topic, specialized collection accidents (commercial, brush and bulky waste collection) and their prevention measures and a summary of the data for the quarter. The discussion in SECTION I will encompass the data since the instigation of IRIS in December 1975, but SECTION II relates only the injury rates and figures applicable to the third quarter of 1977.

Of the 65 IRIS users on-line second quarter, 54 users reported injuries. Since the injury rates are based on man-hours of exposure, they reflect the various start-up periods of the IRIS users.

The time lost and direct costs shown on the FIGURES were provided as of December 31, the "closing data" for receiving data for the second quarter. Any cases where the time lost or direct cost data is incomplete are being monitored for updating.

SECTION I

DISCUSSION OF SPECIALIZED COLLECTION ACCIDENTS AND PREVENTION METHODS

In the past, the Accident Trends reports have examined overall accident patterns for the whole collection division. However, for specialized collection (bulky waste collection, brush collection, and commercial collection are the main three), there are unique accident patterns associated with the type of container handled, the type of waste handled, or the type of equipment used which should be discussed separately. In addition, some of the most serious accidents that occurred to IRIS users were in their specialized collection.

FIGURE 1-1 presents the injury rates for these three specialized collection types, comparing them against each other and against the injury rates for the whole collection division. The man-hours of exposure indicates that each specialized collection type does not comprise a large percentage of the overall collection exposure hours: commercial collection (15%), brush collection (11%), and bulky waste collection (5%). It is the residential collection's injury rates which make the all collection's injury rates higher than the individual specialized collections.

FIGURE 1-1

Injury Rates For

Specialized Collection

	All Collection	Commercial Collection	Brush Collection	Bulky Waste Collection
1. OSHA incidence rate	86	23	29	32
2. OSHA lost workday cases rate	51	14	12	18
3. OSHA severity rate	579	278	166	245
4. Days lost per lost workday case	11.42	20.45	13.84	13.76
5. Average direct cost per OSHA recordable injury	$359	$1,093	$280	$282
6. Direct cost per man-year	$308	$256	$81	$89
7. Man-hours of exposure	10,090,102	1,521,670	1,081,820	475,584

The following discussion of these three types of specialized collection will first describe their accident patterns and then suggest countermeasures to reduce specific accidents. The IRIS data reporting period examined was October 1976 through September 1977.*

1. COMMERCIAL COLLECTION

Commercial collection involves the collection of waste from commercial establishments. Frequently, the type of container being handled is a bulk container and the type of equipment used is a front end loader. Commercial collection crews consist of either one or two men who usually work on an hourly system rather than incentive. The containers they pick up are fewer in number and further apart from stop to stop than residential collection. Therefore, the employees spend less time actually handling containers and more time riding in the cab (there is no rear step for front end loaders and container delivery trucks) than residential collectors. The commercial collection division data examined does not include data from crews that collect from both residential and commercial establishments.

1.1 Accident Types

Figure 1-2 shows the top five accident types that occurred on commercial collection. They comprised 71% of the OSHA recordable injuries, 85% of the days lost, and 92% of the direct costs.

Overexertion accidents almost always occurred as the injured employee was maneuvering a bulk container. Bulk containers, to begin with, weigh several hundred pounds. Therefore, if any circumstances hinder the progress of the container, it can cause severe strains. (There were three back strains that resulted in over 100 days lost each, and overexertions resulted in an average of 18 days lost and $1,044 in direct costs.) Typical causes for overexertions while pushing the bulk containers were:

- the surface was inclined
- the wheel became stuck in a pothole

---

*Although the crew types of the injured employees were collected prior to the fourth quarter of 1976, the crew type collection exposure hours were not. Therefore, all data analyses on crew types are relevant only from October 1976.

- lack of team coordination between the two coworkers

- the wheel was defective, and the bulk container was harder to push

Another cause of back strains when maneuvering the bulk containers was "sudden body movements", most commonly as the employee was attempting to catch and stop the rolling of the container down an incline. This is not considered an overexertion accident because it resulted from "the assumption of an unnatural position or from involuntary motions" (ANSI Z16.2 definition, "Method of Recording Basic Facts Relating to the Nature and Occurrence of Work Injuries").

Slips and falls were almost as frequent as overexertions. Approximately half of these occurred as the employee was getting in and out of the cab (the running board was wet, icy or oily). Another quarter of the slips and falls occurred when the employees were pushing or pulling the containers.

Struck by accidents included two severe injuries. One employee was struck by the sudden popping open of the tailgate as he was opening the tailgate of a container delivery truck, and it paralyzed him from the neck down (IRIS Newsflash, Vol. 1, No. 1). The second employee was struck by a bulk container that fell off the lifters and fractured his foot. However, half the struck by accidents were due to objects ejecting from the hopper of rear loading commercial collection equipment or objects that fell out of the container. The struck by objects ejected from the hopper accidents are more frequent (3%) for commercial collection than for regular collection (2%). Another source of struck by accidents were the turnbuckles as the employee was opening or closing the tailgate (three accidents). This is a high incidence of this accident type since this activity requires only a small fraction of the time during the day.

The caught between accidents occurred mostly as the employee was pushing or pulling the bulk container towards the vehicle for dumping or back towards its storage location. The employees got caught between the vehicle or wall and bulk container.

The object in eye accidents occurred as the employees were operating the controls on the vehicles for dumping the bulk containers.

FIGURE 1-2

COMMON COMMERCIAL COLLECTION CREW ACCIDENTS

		No. Inj.	%No. Inj.	No. Days Lost	%Days Lost	Direct Costs	%Direct Costs
1.	Overexertions	39	22	721	34	$40,717	21
2.	Slips and Falls	33	19	531	25	39,898	21
3.	Struck by	20	11	416	20	91,832	47
4.	Caught between	18	10	123	6	5,062	3
5.	Object in eye	16	9	4	<1	576	<1
	TOTAL	178	100%	2,115	100%	194,578	100%

FIGURES 1-3 to 1-5 analyze the injury rates for commercial collection by user. Therefore, users can compare their injury rates with other similar commercial collection operations as well as the AVERAGES for all users.

1.2 Countermeasures

Requiring two men to maneuver the bulk containers. In order to reduce the most frequent and costly of the bulk container handling injuries (overexertions), the employees need to use help. IRIS data indicates that the injury rates for two man bulk container collection was lower than for one man (OSHA incidence rates of 27 and 23, respectively). Therefore, an organization switching to two man bulk container collection can expect a reduction of 4 non-first aid injuries per 100 employees per year. In addition, the two man-collection should also be able to collect from more stops. Requiring two men commercial collection crews can also aid in reducing the caught between accidents which presumably occurred when the employees lost control of the bulk container.

Pushing bulk container training. The employees should push rather than pull the bulk container, and it should be done in increments such that they maintain control of the bulk container during the entire maneuver. Pulling the bulk container causes "struck self" accidents where the employees run the wheel over their feet. They are also less likely to get their hand caught between the container and wall or vehicle. In addition, the bulk container lid should not be half-open, which could cause it to swing shut on the employee's hand. Coordination between the two employees is essential in not introducing new hazards such as strains caused by the uneven exertions of the

FIGURE 1-3

AVERAGE INJURY RATES BY 'IRIS' USERS
RANKED FROM HIGHEST TO LOWEST
COMMERCIAL CREW

:PORTING PERIOD: OCTOBER 1976 - SEPTEMBER 1977

:FINITIONS: AVERAGE RATIO = RATE / AVERAGE FOR THE RATE.
:HA INCIDENCE RATE = (NUMBER OF OSHA RECORDABLE CASES /
:N-HOURS EXPOSURE) X 200,000. ROUGHLY EQUIVALENT TO
:E NUMBER OF CASES PER 100 FULL TIME EMPLOYEES PER YEAR.
:ES NOT INCLUDE FIRST AID INJURIES. DOES INCLUDE MEDICAL
:EATMENT, LOST TIME, PERMANENT DISABILITY AND FATALITY CASES.
:VERITY RATE = (NUMBER OF WORKDAYS LOST / MAN-HOURS EXPOSURE) X 200,000.
:UGHLY EQUIVALENT TO THE NUMBER OF WORKDAYS LOST PER 100 FULL TIME
:PLOYEES PER YEAR.

:STRUCTIONS: FIND YOUR ORGANIZATION'S USER NUMBER AND COMPARE
:W IT RANKS WITH THE AVERAGE AND OTHER IRIS USERS.
GOOD STANDING IS AN AVERAGE RATIO OF LESS THAN .50.
POOR STANDING IS AN AVERAGE RATIO OF GREATER THAN 1.25.

	OSHA INCIDENCE RATE				INCIDENCE RATE - LWC				SEVERITY RATE		
:IS :ER :O.	MAN-HOURS EXPOSURE	NO. INJ	RATE	AVG RATIO	IRIS USER NO.	NO. INJ	RATE	AVG RATIO	IRIS USER NO.	RATE	AVG RATIO
:10	6,570	6	183	7.81	210	4	122	8.58	244	3,308	11.90
325	19,606	14	143	6.10	325	11	112	7.91	210	2,283	8.21
99	4,171	2	96	4.10	149	1	77	5.40	197	2,169	7.80
11	33,371	13	78	3.33	341	4	68	4.78	325	1,357	4.88
49	2,607	1	77	3.28	211	9	54	3.80	328	1,199	4.31
07	58,400	22	75	3.22	207	15	51	3.62	133	1,081	3.89
29	7,978	3	75	3.21	328	1	48	3.38	236	767	2.76
41	11,784	4	68	2.90	125	2	48	3.38	260	596	2.14
55	20,857	7	67	2.87	358	1	30	2.08	146	574	2.06
58	6,779	2	59	2.52	133	4	27	1.88	207	455	1.64
28	4,171	1	48	2.05	329	1	25	1.77	101	391	1.41
25	8,343	2	48	2.05	146	13	23	1.63	125	360	1.29
60	106,371	23	43	1.85	197	4	23	1.63	341	339	1.22
.91	10,011	2	40	1.71	260	12	23	1.59	211	306	1.10
36	10,429	2	38	1.64	101	3	22	1.56	AVG	278	1.00
.01	27,114	5	37	1.58	355	2	19	1.35	149	230	0.83
46	112,629	18	32	1.37	236	1	19	1.35	113	214	0.77
36	52,873	8	30	1.29	336	5	19	1.33	358	89	0.32
35	13,766	2	29	1.24	244	1	16	1.13	115	83	0.30
13	22,421	3	27	1.14	AVG	108	14	1.00	204	77	0.28
.33	29,965	4	27	1.14	115	4	12	0.83	316	72	0.26
15	67,577	9	27	1.14	296	2	10	0.68	336	49	0.18
63	8,350	1	24	1.02	113	1	9	0.63	355	48	0.17
VG	1,521,670	178	23	1.00	283	1	9	0.61	296	38	0.14
97	34,675	4	23	0.99	183	1	8	0.59	283	35	0.13
86	18,771	2	21	0.91	204	1	4	0.27	183	25	0.09
59	11,395	1	18	0.75	316	3	3	0.22	329	25	0.09
.83	23,881	2	17	0.72	292	1	3	0.21	292	12	0.04
44	12,514	1	16	0.68							

FIGURE 1-3 (Continued)

OSHA INCIDENCE RATE					INCIDENCE RATE - LWC				SEVERITY RATE		
IRIS USER NO.	MAN-HOURS EXPOSURE	NO. INJ	RATE	AVG RATIO	IRIS USER NO.	NO. INJ	RATE	AVG RATIO	IRIS USER NO.	RATE	AVG RATIO
296	41,714	3	14	0.61							
330	18,771	1	11	0.46							
326	21,274	1	9	0.40							
283	22,943	1	9	0.37							
292	67,369	2	6	0.25							
204	52,143	1	4	0.16							
316	191,886	3	3	0.13							
178	176,660	2	2	0.10							

FIGURE 1-4

AVERAGE WORKDAYS LOST PER LOST WORKDAY CASE
BY 'IRIS' USERS
RANKED FROM HIGHEST TO LOWEST
COMMERCIAL CREW

EPORTING PERIOD: OCTOBER 1976 - SEPTEMBER 1977

NSTRUCTIONS: FIND YOUR ORGANIZATION'S USER NUMBER AND COMPARE
OW IT RANKS WITH THE AVERAGE AND OTHER IRIS USERS.
GOOD STANDING IS AN AVERAGE RATIO OF LESS THAN .50.
POOR STANDING IS AN AVERAGE RATIO OF GREATER THAN 1.25.

RANK	IRIS USER NO.	NO LOST WKDY CASES	DAYS LOST	AVG WKDYS LOST	AVG RATIO (DAYS / AVG)
HIGHEST	244	1	207	207.00	10.12
2	197	4	376	94.00	4.60
3	133	4	162	40.50	1.98
4	236	1	40	40.00	1.96
5	260	12	317	26.42	1.29
6	328	1	25	25.00	1.22
7	146	13	323	24.85	1.22
8	113	1	24	24.00	1.17
9	316	3	69	23.00	1.12
	AVG	101	2,065	20.45	1.00
10	204	1	20	20.00	0.98
11	210	4	75	18.75	0.92
12	101	3	53	17.67	0.86
13	325	11	133	12.09	0.59
14	207	9	85	9.44	0.46
15	115	3	26	8.67	0.42
16	125	2	15	7.50	0.37
17	211	9	51	5.67	0.28
18	341	4	20	5.00	0.24
19	296	2	8	4.00	0.20
20	292	1	4	4.00	0.20
21	283	1	4	4.00	0.20
22	358	1	3	3.00	0.15
23	183	1	3	3.00	0.15
24	149	1	3	3.00	0.15
25	336	5	13	2.60	0.13
26	355	2	5	2.50	0.12
LOWEST	329	1	1	1.00	0.05

FIGURE 1-5

DIRECT COSTS BY 'IRIS' USERS
RANKED FROM HIGHEST TO LOWEST
COMMERCIAL CREW

REPORTING PERIOD: OCTOBER 1976 - SEPTEMBER 1977

DEFINITIONS: DIRECT COSTS INCLUDE MEDICAL EXPENSES, WORKMEN'S COMPENSATION BENEFITS, AND WAGE CONTINUATION BENEFITS (E.G. INJURY LEAVE) ONLY. INDIRECT COSTS ARE NOT INCLUDED. DIRECT COSTS PER MAN-YEAR IS THE COST PER FULL-TIME SANITATION EMPLOYEE PER YEAR BASED ON 2,000 HOURS PER YEAR.

INSTRUCTIONS: FIND YOUR ORGANIZATION'S USER NUMBER AND COMPARE HOW IT RANKS WITH THE AVERAGE AND OTHER IRIS USERS.
A GOOD STANDING IS AN AVERAGE RATIO OF LESS THAN .50.
A POOR STANDING IS AN AVERAGE RATIO OF GREATER THAN 1.25.

AVG DIRECT COST/OSHA RECORDABLE INJ

IRIS USER NO.	NO. OSHA RECORD INJ	AVG COST	AVG RATIO (AVG COST/AVG)
197	4	22,292	20.39
244	1	14,907	13.64
236	2	3,612	3.30
133	4	2,267	2.07
204	1	1,263	1.16
316	3	1,230	1.13
146	18	1,154	1.06
AVG	178	1,093	1.00
210	6	995	0.91
325	14	831	0.76
260	23	595	0.54
125	2	519	0.47
328	1	458	0.42
113	3	442	0.40
341	4	356	0.33
101	5	345	0.32
296	3	234	0.21
358	2	227	0.21
211	13	199	0.18
207	22	194	0.18
283	1	177	0.16
292	2	174	0.16
115	9	164	0.15
149	1	131	0.12
183	2	80	0.07
329	3	66	0.06
299	2	60	0.06
363	1	53	0.05
330	1	40	0.04
359	1	34	0.03
186	2	27	0.03

DIRECT COST PER MAN YEAR

IRIS USER NO.	MAN-HRS EXPOSURE	COSTS PER M-Y	AVG RATI (COSTS/AV
197	34,675	5,143.13	20.10
244	12,514	2,382.40	9.31
210	6,570	1,818.26	7.11
236	10,429	1,385.42	5.41
325	19,606	1,186.29	4.64
133	29,965	605.38	2.37
146	112,629	368.88	1.44
260	106,371	257.32	1.01
AVG	1,521,670	255.91	1.00
125	8,343	248.84	0.97
341	11,784	241.85	0.95
328	4,171	219.59	0.86
211	33,371	157.92	0.62
207	58,400	145.99	0.57
358	6,779	133.95	0.52
101	27,114	127.09	0.50
113	22,421	118.28	0.46
149	2,607	100.49	0.39
299	4,171	58.01	0.23
329	7,978	49.64	0.19
204	52,143	48.44	0.19
115	67,577	45.73	0.18
316	191,886	38.46	0.15
296	41,714	33.66	0.13
283	22,943	15.43	0.06
355	20,857	14.38	0.06
183	23,881	13.40	0.05
363	8,350	12.69	0.05
292	67,369	10.36	0.04
191	10,011	7.99	0.03
336	52,873	6.05	0.02

FIGURE 1-5 (Continued) PAGE 1

/G DIRECT COST/OSHA RECORDABLE INJ				DIRECT COST PER MAN YEAR			
IIS ER IO.	NO. OSHA RECORD INJ	AVG COST	AVG RATIO (AVG COST/AVG)	IRIS USER NO.	MAN-HRS EXPOSURE	COSTS PER M-Y	AVG RATIO (COSTS/AVG)
.78	2	25	0.02	359	11,395	5.97	0.02
155	7	21	0.02	186	18,771	5.86	0.02
136	8	20	0.02	330	18,771	4.26	0.02
.91	2	20	0.02	235	13,766	3.63	0.01
135	2	12	0.01	178	176,660	0.58	0.00
126	1	4	0.00	326	21,274	0.38	0.00

two employees or one employee pushing the container into the second. In team pushing of the bulk container, one person should be giving the signals for pushing simultaneously, and they should both agree on the best way to maneuver the container in the right position. On no account should an employee be in front of or near the lifting arms when it is in motion. An accident occurred where the employee was holding the bulk container in position as his coworker maneuvered the lifters into the slot. However, the lifting arm caught and amputated his finger when it pinched his hand against the container.

Hazardous surface avoidance. The employees should observe the surface the bulk container must be maneuvered over and look for hazardous surface conditions such as potholes, ice patches, or waste on the ground. With planning, these can be maneuvered around and avoided. With this hazardous surface recognition and avoidance training, overexertion as well as slip and fall accidents can be reduced.

Personal protective equipment. Commercial collection employees have higher exposure to industrial wastes, or toxic chemicals. It can spill out of the bulk container as it is being pushed or dumped, be ejected from the hopper, or be dispersed in the air when the container is being emptied. Therefore, the employees should wear long sleeved shirts and eye protection. Protection against inhaling toxic fumes should also be considered (e.g., respirator), although acceptance to them because of discomfort is low. Bump caps are recommended because of the overhead hazards of waste falling down from emptying the container into a front end loader, striking against the lifting arms, the container falling off the lifters, the cable on a winch system breaking and striking the employee, or the lifting arms malfunctioning and striking the employee on the head. Slip resistant, steel toed safety shoes are recommended. Metatarsal protection should be considered, also. Employees can have the container be pushed over their feet or have the container fall off the lift arms. Slip resistance is especially important for jobs that require horizontal push and pull forces (e.g., pushing the bulk container) because the activity decreases the coefficient of friction between the shoe sole and surface, thus increasing the likelihood of slips and falls. Gloves should definitely be standard personal protective equipment for all collection employees.

Equipment modifications. The running boards should be slip resistant and self-cleaning (e.g., open meshed) to prevent the accumulation of water and snow. In addition, adequate handholds should be provided to aid in getting in and out of the cab.

Maintaining bulk containers. Defects on the bulk containers should be reported to the garage immediately and

it should be repaired immediately. In particular, the wheels must be functioning properly for ease of pushing, and the hinges on the lids should not make it hard to open and close the lid. Rusty containers should be replaced immediately.

Container location regulations. Hazardous surfaces such as gravel and inclines (causing overexertions and slips and falls) as well as confined spaces (causing caught betweens) can be regulated such that the bulk container must be located in an accessible, level area.

Dumping bulk containers into the vehicle. On rear end loaders, the employee should be trained to operate the packing mechanism lever with the left hand (if two handed controls are not provided) so the employee is not tempted to reach his left hand out to unjam the waste or push the falling waste back in without stopping the packer panel. Eye protection is essential in this operation. Employees have also been known to get their hand caught between the trunion and the hopper sill and to overexert themselves when attempting to hold up a container that was falling off the lifting arms. Let the container fall.

Emptying the vehicle at the disposal site. The employees should park the vehicle at least six feet away from another vehicle on each side. Before unlatching the tailgate, he should make sure that no one is standing in the way of the swing arc of the tailgate. Remember that the refuse is under great pressure and can cause the tailgate to pop open with a great deal of force, particularly with side opening single or double doors. The ejector blade should be in the forward (towards cab) position to relieve pressure on the refuse, and the tailgate should be opened slowly. Tailgate latches for the side swinging doors should be designed such that the employee will not be in front of the doors and/or that the tailgate has a restraining device that only allows the tailgate to open a few inches. The excerpt from the IRIS Newsflash (Vol. 1, January, 1977) on the serious accident where the employee was paralyzed after the tailgate struck him follows:

> This injury occurred to a commercial collection worker and involved a roll-off truck. According to the accident report, the employee apparently was at the landfill opening up the rear door of the 32 cubic yard compactor bin. The door was hinged on the right. The container was picked up from a department store that tended to overfill the container. There were no witnesses, and the injured employee was discovered near the truck. The compactor door was slightly ajar. According to the investigation

findings, it is believed that what happened is probably as follows: He pushed up on the handle to release the rear door. The handle is located three feet from the rear on the left side. Thinking that the door was opened, he went to the rear, and the door "popped open". The investigators believe that the overfilling of the container "hung up" the door momentarily. The employee was struck on the chin by the door knob, knocking him down. He has lost the use of all his limbs and requires a respirator. It is anticipated that his injury may cost up to $250,000.

ANSI Z245.3 standard for the stability of refuse bins. This standard was discussed in the June 1977 issue of "IRIS News". It is important to remention it here because of the passing of Consumer Product Safety Commission's (CPSC) regulations concerning it which becomes effective on June 13, 1978 in which all refuse bins "in commerce" that are in violation will have to be retrofit. The ANSI Z245.3 standard was drawn up in response to the impending legislation. Although the ANSI Z245.3 is a voluntary standard and the CPSC regulations may not apply to your organization, you should still retrofit the bins in violation because of insurance liability.

The ANSI Z245.3 standard, which was approved in December 1976, directs itself primarily at bins designed to be mechanically emptied into rear or side loading refuse collection compaction vehicles. Typically, such bins are slope-sided to facilitate use with the vehicle hopper configuration and to empty the contents more efficiently. The flaw in the design is that it is very easy for young children, who are playing on the containers, to tip them over onto themselves. In fact, there have been several deaths as a result of this accident.

The ANSI Z245.3 standard requires that the slope-sided bins do not tip when subjected to a force of 70 pounds exerted horizontally and 191 pounds exerted vertically from the leading edge of the bin. In each case, the test is to be done with the bin empty and the wheels and covers in their most adverse position. The standard also requires that appropriate safety markings be affixed to the container.

Because of the seriousness of the hazard of these bins, the new ANSI requirements will apply not only to the manufacturer, but also to the owner, collector, or customer who uses these containers. Existing bins must be brought

within the standard through a retrofit program, or they must be adequately protected from unauthorized access and accidental tipping.

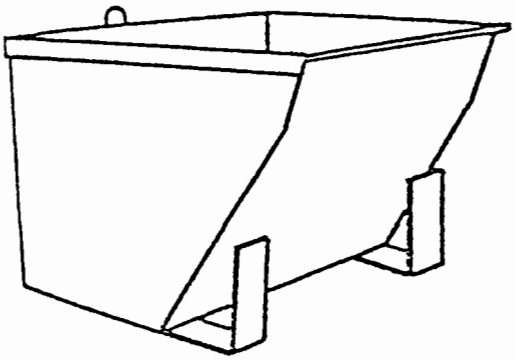

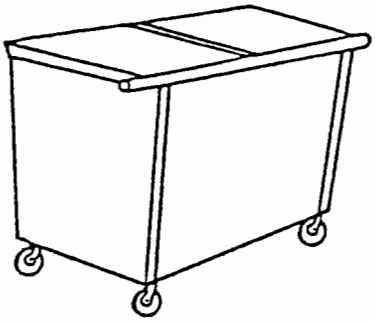

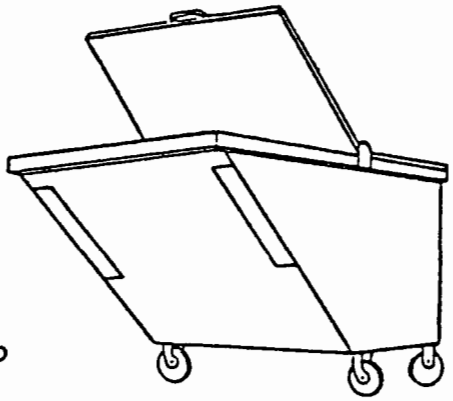

The suggested deadline for this standard reflects priority given to bin locations where children are most likely to congregate. The proposed implementation schedule contained in the standard is as follows:

Locations	Date
Schoolyards	September, 1977
Parks and Playgrounds	March, 1978
Apartment Developments	September, 1978
All Other Locations	March, 1979

Since all slope-sided bins manufactured after this June must comply with the standard, you should include the ANSI Requirements in your bidding specifications. Copies of both standards may be obtained by writing to:

American National Standards Institute, Inc.
Sales Department
1430 Broadway
New York, New York 10018

2. BRUSH COLLECTION

The term brush collection is used here to cover crews that collect strictly brush from residential areas. This is accomplished in several ways by the users:

- By the regular residential collection crews one day a week, not using special equipment.
- By a separate brush collection crew that visits the same location approximately once a month. The crew works a different route each day.
- By means of "trash stations" located in convenient areas for residents to dump their brush. Then a brush crew picks up the brush once a week.

Various pieces of equipment as well as number and type of personnel can make up a brush collection crew:

- A regular rear end loader crew of two collectors and a driver.
- An open body truck crew with collectors that use handtools (e.g., rake, pitchfork).
- A crew using two types of equipment, a front loader that has a bucket to scoop up the brush and a trash trailer that has more than one trailer for dumping the brush in. Besides the driver of the two vehicles, a manual collector with a pitchfork is also needed to move the brush so that it is more accessible to the loader. In addition, another vehicle is required to transport the loader between routes. More than one trailer is required so that the brush pick up will not need to be stopped as the brush is taken to the disposal site, and two trailers can also be hauled off at the same time.

- A crew using a trash crane and more than one dump truck. This crew also requires laborers or "groundmen" to clean up what the crane cannot pick up.

- A crew that uses a chipper that grinds up the brush. The collectors feed brush into the chipper. However, the hazards of objects being ejected increases with the chipper, and employees should at least wear a face shield around the machine.

Referring back to FIGURE 1-1, brush collection had the lowest severity and direct cost rates of the three types of specialized collection.

2.1 Accident Types

FIGURE 1-6 gives the top six accident types for brush collection. Again, overexertions ranked the highest. These six accident types account for 79% of the OSHA recordable injuries, 71% of the days lost, and 75% of the direct costs for brush collection.

FIGURE 1-6

COMMON BRUSH COLLECTION CREW ACCIDENTS

	No. Inj.	%No. Inj.	No. Days Lost	%Days Lost	Direct Costs	%Direct Costs
1. Overexertion	33	21	435	49	$21,999	50
2. Slips and falls	22	14	79	9	3,924	9
3. Struck by	20	13	61	7	2,714	6
4. Struck self	17	11	38	4	2,320	5
5. Object in eye	17	11	18	2	1,582	4
6. Stepped on sharp object	14	9	3	<1	555	1
TOTAL	156	100%	896	100%	$43,757	100%

Overexertion accidents occurred usually as the employee was "lifting to dump" shrubbery or using a pitchfork

to load the vehicle with brush. The overexertion accidents resulted in an average of 13 days lost and $667 in direct costs each. These figures are lower than those for overexertions occurring in commercial collection.

Slips and falls occurred mostly as employees were getting on and off the vehicle due to wet steps or the ground was wet or oily or there was a rock or a depression. In addition, while handling shrubbery, the employees slipped or fell when the pavement was wet or oily. Falls to a different level also interestingly included three falls from the truck bed as the employees were unloading waste; one fell into the incinerator pit.

Struck by accidents were due to a number of reasons. A quarter of them occurred from objects (brush) ejecting from the operating hopper; another quarter was from brush falling off the open bed truck or from the crane bucket. Other struck by accidents were from the brush swinging around the hopper as it was being compacted, being struck by brush handled by a coworker, and being struck by the cab door.

Struck self accidents occurred as the employees were handling shrubbery, as they poked themselves in the eyes and face with it or dropped it on their feet. This accident type category is slightly different from "hurt by handling" accidents where the employees puncture or cut their hands while handling brush.

Object in eye accidents occurred as frequently as the struck self accidents and are more frequent in brush collection than in commercial collection. Over half of the object in eye accidents occurred while the employees were handling shrubbery either by hand or with a handtool.

Stepped on sharp object accidents occurred 9% of the time to injured employees. This accident type occurred only 2% of the time to commercial collectors. The brush collection employees were stepping on nails and boards with nails that were mixed up with the shrubbery in the waste.

FIGURES 1-7 to 1-9 analyze the injury rates for brush collection by user, and users can refer to these figures to compare their injury rates with other similar brush collection operations and with the AVERAGES of the rates for all users.

FIGURE 1-7

AVERAGE INJURY RATES BY 'IRIS' USERS
RANKED FROM HIGHEST TO LOWEST
BRUSH CREW

EPORTING PERIOD: OCTOBER 1976 - SEPTEMBER 1977

EFINITIONS: AVERAGE RATIO = RATE / AVERAGE FOR THE RATE.
SHA INCIDENCE RATE = (NUMBER OF OSHA RECORDABLE CASES /
AN-HOURS EXPOSURE) X 200,000. ROUGHLY EQUIVALENT TO
HE NUMBER OF CASES PER 100 FULL TIME EMPLOYEES PER YEAR.
DES NOT INCLUDE FIRST AID INJURIES. DOES INCLUDE MEDICAL
REATMENT, LOST TIME, PERMANENT DISABILITY AND FATALITY CASES.
EVERITY RATE = (NUMBER OF WORKDAYS LOST / MAN-HOURS EXPOSURE) X 200,000.
OUGHLY EQUIVALENT TO THE NUMBER OF WORKDAYS LOST PER 100 FULL TIME
MPLOYEES PER YEAR.

NSTRUCTIONS: FIND YOUR ORGANIZATION'S USER NUMBER AND COMPARE
OW IT RANKS WITH THE AVERAGE AND OTHER IRIS USERS.
GOOD STANDING IS AN AVERAGE RATIO OF LESS THAN .50.
POOR STANDING IS AN AVERAGE RATIO OF GREATER THAN 1.25.

OSHA INCIDENCE RATE					INCIDENCE RATE - LWC				SEVERITY RATE		
RIS SER NO.	MAN-HOURS EXPOSURE	NO. INJ	RATE	AVG RATIO	IRIS USER NO.	NO. INJ	RATE	AVG RATIO	IRIS USER NO.	RATE	AVG RATIO
242	4,171	2	96	3.32	341	2	64	5.24	172	449	2.71
341	6,257	3	96	3.32	242	1	48	3.93	341	384	2.32
146	20,075	7	70	2.42	146	3	30	2.45	242	192	1.16
172	258,629	63	49	1.69	172	30	23	1.90	146	169	1.02
204	18,771	4	43	1.48	AVG	66	12	1.00	AVG	166	1.00
101	208,571	44	42	1.46	179	3	11	0.90	101	93	0.56
236	18,771	3	32	1.11	125	4	11	0.87	125	88	0.53
AVG	1,081,820	156	29	1.00	236	1	11	0.87	170	81	0.49
179	54,750	4	15	0.51	170	15	9	0.76	179	73	0.44
125	75,086	5	13	0.46	101	7	7	0.55	236	11	0.06
170	323,494	21	13	0.45							

FIGURE 1-8

AVERAGE WORKDAYS LOST PER LOST WORKDAY CASE
BY 'IRIS' USERS
RANKED FROM HIGHEST TO LOWEST
BRUSH

REPORTING PERIOD: OCTOBER 1976 - SEPTEMBER 1977

INSTRUCTIONS: FIND YOUR ORGANIZATION'S USER NUMBER AND COMPARE HOW IT RANKS WITH THE AVERAGE AND OTHER IRIS USERS.
A GOOD STANDING IS AN AVERAGE RATIO OF LESS THAN .50.
A POOR STANDING IS AN AVERAGE RATIO OF GREATER THAN 1.25.

RANK	IRIS USER NO.	NO LOST WKDY CASES	DAYS LOST	AVG WKDYS LOST	AVG RATIO (DAYS / AVG)
HIGHEST	146	3	340	113.33	8.19
2	236	1	41	41.00	2.96
3	101	7	150	21.43	1.55
4	172	30	581	19.37	1.40
5	341	2	32	16.00	1.16
	AVG	61	844	13.84	1.00
6	125	4	48	12.00	0.87
7	170	11	85	7.73	0.56
8	179	2	14	7.00	0.51
LOWEST	242	1	4	4.00	0.29

FIGURE 1-9

DIRECT COSTS BY 'IRIS' USERS
RANKED FROM HIGHEST TO LOWEST
BRUSH

:PORTING PERIOD: OCTOBER 1976 - SEPTEMBER 1977

:FINITIONS: DIRECT COSTS INCLUDE MEDICAL EXPENSES,
IRKMEN'S COMPENSATION BENEFITS, AND WAGE CONTINUATION BENEFITS
:.G. INJURY LEAVE) ONLY. INDIRECT COSTS ARE NOT INCLUDED.
:RECT COSTS PER MAN-YEAR IS THE COST PER FULL-TIME SANITATION
IPLOYEE PER YEAR BASED ON 2,000 HOURS PER YEAR.

ISTRUCTIONS: FIND YOUR ORGANIZATION'S USER NUMBER AND COMPARE
)W IT RANKS WITH THE AVERAGE AND OTHER IRIS USERS.
GOOD STANDING IS AN AVERAGE RATIO OF LESS THAN .50.
POOR STANDING IS AN AVERAGE RATIO OF GREATER THAN 1.25.

)G DIRECT COST/OSHA RECORDABLE INJ				DIRECT COST PER MAN YEAR			
:IS)ER)O.	NO. OSHA RECORD INJ	AVG COST	AVG RATIO (AVG COST/AVG)	IRIS USER NO.	MAN-HRS EXPOSURE	COSTS PER M-Y	AVG RATIO (COSTS/AVG)
)41	3	485	1.73	341	6,257	464.75	5.74
.72	63	455	1.62	172	258,629	221.55	2.73
)VG	156	280	1.00	242	4,171	83.42	1.03
.70	21	263	0.94	AVG	1,081,820	81.01	1.00
.25	5	172	0.61	146	20,075	54.60	0.67
.79	4	166	0.59	101	208,571	51.26	0.63
.01	44	121	0.43	204	18,771	34.52	0.43
!42	2	87	0.31	170	323,494	34.10	0.42
!04	4	81	0.29	179	54,750	24.33	0.30
.46	7	78	0.28	236	18,771	23.44	0.29
!36	3	73	0.26	125	75,086	22.88	0.28

2.2 Countermeasures

Personal protective equipment. Gloves is a must for employees who will be manually handling the brush to prevent punctures and abrasions. In areas where palm fronds are abundant, a more puncture proof pair of gloves should be provided. Bump caps or hardhats should also be provided for the ground crew that will be working under cranes and loaders or next to open body trucks, all of which can drop branches or lumber onto the employees. Safety shoes with puncture protection should also be provided because of the frequency of stepped on sharp object accidents for these employees. Long sleeved shirts can provide minimum protection against scratches and abrasions. Safety glasses or face shields are also recommended for brush collection crews that use chippers or packers.

Reducing manual collection. Since overexertions were the majority of the accidents, reducing these accidents should be of primary concern. To reduce the hazards of handling heavy and bulky shrubbery, the brush collection crew can be provided with equipment that can scoop up brush and place it onto trucks such as front loaders and trash cranes. The use of open body trucks with collectors that use handtools has the additional hazard of the high loading sill that they have to pitch the brush over. As the data showed, they were lifting to dump brush at the time of the overexertions, and this type of collection is conducive to throwing the brush which causes more overexertions and slips and falls. Using more efficient equipment of course is also more productive. In addition, if open body trucks or trailers are being used, they should have a raised bed so that employees do not have to climb on and off the tailgate to load and unload the vehicle (reduces these high severity falls).

Separate brush collection. Users who do not collect brush separately should consider one of the methods outlined previously. The abundance of brush in the waste is seasonal and can be quite heavy during certain times of the year (e.g., leaves in the fall, yard trimmings after spring rains). Therefore, to collect the heavy, bulky waste with regular collection increases the hazards for the collector as well as increases his work load. How frequent the brush collection should be has to be gauged individually by each solid waste organization since the amount of brush found in the waste varies widely by area and climatic conditions.

Waste regulations. If the type of brush collection is manual, regulations concerning the length of the brush that will be acceptable (4 feet), the bundling of it and the bundle size (30" diameter) should be formulated for ease of handling. This is also important for organizations that do not have separate brush collection.

3. BULKY WASTE COLLECTION

Bulky waste collection handles wastes that are too heavy or bulky for regular collection (e.g., furniture, appliances, mattresses, rugs). The common types of equipment used are the open body truck and rear loaders with high compaction.

FIGURE 1-1 shows that of the three types of specialized collection, bulky waste collection had the highest incidence rate (one out of three employees suffered a non-first aid injury a year). However, it ranked second in severity and direct cost rates, behind commercial collection.

3.1 Accident Types

FIGURE 1-10 ranks the top four accident types for this type of collection. They comprised 64% of the OSHA recordable injuries, 59% of the days lost, and 55% of the direct costs.

FIGURE 1-10

COMMON BULKY WASTE COLLECTION

CREW ACCIDENTS

	No. Inj.	%No. Inj.	No. Days Lost	%Days Lost	Direct Costs	%Direct Costs
1. Overexertions	15	20	257	44	$7,221	34
2. Slips and falls	12	16	78	13	3,476	16
3. Struck by	12	16	6	1	604	3
4. Struck self	9	12	8	1	511	2
TOTAL	75	100%	582	100%	$21,159	100%

Overexertion accidents, unlike the overexertions in the other two types of specialized collection, involved the coworker helping at the time of the accident in over half the accidents. This is due to the heaviness and awkwardness of the waste involved, since items such as furniture and appliances cannot be handled alone.

Slips and falls resulted in several serious fractures when employees fell off the vehicle, particularly from the tailgate.

Struck by accidents occurred most frequently as the employee was loading the item onto the truck when it fell off, or it knocked some other object off.

The struck self accidents involved losing control of the bulky item to where it fell onto the employee as he was lifting or lifting to dump it.

3.2 Countermeasures

Provide equipment to aid in handling bulky items. In manual bulky waste collection, it should be viewed essentially the same as the moving industry. In other words, the employees should be provided with a heavy duty dolly that has a wrap around cord to move such items as appliances. The employees should not be lifting heavy or bulky items alone. The vehicle should have either a hydraulic lift gate or a ramp to carry the item or push the dolly up onto the truck bed. Employees should not be expected to lift the bulky waste onto vehicle beds that are higher than three feet (height of hopper sill) as found on open body and pick up trucks. These alterations can provide a more efficient as well as safer operation and will reduce overexertions as well as struck by and struck self accidents.

Automate bulky waste collection. Bulky waste collection can also be accomplished with a system that utilizes a trash crane and a truck to load the bulky waste onto. This should greatly reduce the injuries to this collection type.

Requiring two man lifts. Much of the bulky wastes being collected are much heavier than the 60 lb. weight limit for containers. Not only that, but their size also make them extremely awkward to handle alone. Therefore, two men should be required to lift and handle most of the bulky items, but especially furniture and appliances. Again, team coordination is essential, and employees should be specifically trained on this as well as how to properly use the dolly and how to stack the bulky items in the truck properly.

Personal protective equipment. Gloves should be standard equipment to reduce abrasions and cuts to hands in handling the bulky wastes. Gloves may also somewhat buffer pinching accidents that result in bruises. Safety shoes with steel toes and metatarsal protection should be required because of the likelihood of setting furniture on their feet and bulky waste dropping on their feet. However, metatarsal protection can cause discomfort and possibly fatigue due to the increased weight and should be tested and monitored for these adverse effects before they are required.

FIGURE 1-11

AVERAGE INJURY RATES BY 'IRIS' USERS
RANKED FROM HIGHEST TO LOWEST
BULKY ITEM CREW

EPORTING PERIOD: OCTOBER 1976 - SEPTEMBER 1977

EFINITIONS: AVERAGE RATIO = RATE / AVERAGE FOR THE RATE.
SHA INCIDENCE RATE = (NUMBER OF OSHA RECORDABLE CASES /
AN-HOURS EXPOSURE) X 200,000. ROUGHLY EQUIVALENT TO
HE NUMBER OF CASES PER 100 FULL TIME EMPLOYEES PER YEAR.
DES NOT INCLUDE FIRST AID INJURIES. DOES INCLUDE MEDICAL
REATMENT, LOST TIME, PERMANENT DISABILITY AND FATALITY CASES.
EVERITY RATE = (NUMBER OF WORKDAYS LOST / MAN-HOURS EXPOSURE) X 200,000.
OUGHLY EQUIVALENT TO THE NUMBER OF WORKDAYS LOST PER 100 FULL TIME
MPLOYEES PER YEAR.

NSTRUCTIONS: FIND YOUR ORGANIZATION'S USER NUMBER AND COMPARE
OW IT RANKS WITH THE AVERAGE AND OTHER IRIS USERS.
GOOD STANDING IS AN AVERAGE RATIO OF LESS THAN .50.
POOR STANDING IS AN AVERAGE RATIO OF GREATER THAN 1.25.

OSHA INCIDENCE RATE				
RIS USER NO.	MAN-HOURS EXPOSURE	NO. INJ	RATE	AVG RATIO
341	834	2	479	15.20
221	3,963	3	151	4.80
146	2,920	2	137	4.34
149	1,669	1	120	3.80
362	2,346	1	85	2.70
171	101,679	40	79	2.49
299	10,311	4	78	2.46
179	18,771	6	64	2.03
197	3,285	1	61	1.93
181	9,386	2	43	1.35
191	62,571	11	35	1.11
186	6,257	1	32	1.01
AVG	475,584	75	32	1.00
340	9,386	1	21	0.68

INCIDENCE RATE - LWC			
IRIS USER NO.	NO. INJ	RATE	AVG RATIO
341	2	479	26.51
221	3	151	8.37
149	1	120	6.63
197	1	61	3.37
181	2	43	2.36
171	21	41	2.28
299	2	39	2.15
179	3	32	1.77
186	1	32	1.77
191	7	22	1.24
AVG	43	18	1.00

SEVERITY RATE		
IRIS USER NO.	RATE	AVG RATIO
221	5,753	23.51
341	3,596	14.69
149	2,277	9.30
299	1,474	6.02
179	1,374	5.62
181	511	2.09
171	350	1.43
AVG	245	1.00
197	122	0.50
191	74	0.30
186	64	0.26

FIGURE 1-12

AVERAGE WORKDAYS LOST PER LOST WORKDAY CASE
BY 'IRIS' USERS
RANKED FROM HIGHEST TO LOWEST
BULKY WASTE

REPORTING PERIOD: OCTOBER 1976 - SEPTEMBER 1977

INSTRUCTIONS: FIND YOUR ORGANIZATION'S USER NUMBER AND COMPARE HOW IT RANKS WITH THE AVERAGE AND OTHER IRIS USERS.
A GOOD STANDING IS AN AVERAGE RATIO OF LESS THAN .50.
A POOR STANDING IS AN AVERAGE RATIO OF GREATER THAN 1.25.

RANK	IRIS USER NO.	NO LOST WKDY CASES	DAYS LOST	AVG WKDYS LOST	AVG RATIO (DAYS / AVG)
HIGHEST	197	1	378	378.00	27.48
2	179	2	126	63.00	4.58
3	341	1	46	46.00	3.34
4	299	2	76	38.00	2.76
5	221	3	114	38.00	2.76
6	149	1	22	22.00	1.60
	AVG	41	564	13.76	1.00
7	181	2	24	12.00	0.87
8	171	21	178	8.48	0.62
9	191	7	23	3.29	0.24
LOWEST	186	1	2	2.00	0.15

FIGURE 1-13

DIRECT COSTS BY 'IRIS' USERS
RANKED FROM HIGHEST TO LOWEST
BULKY WASTE

EPORTING PERIOD: OCTOBER 1976 - SEPTEMBER 1977

EFINITIONS: DIRECT COSTS INCLUDE MEDICAL EXPENSES,
ORKMEN'S COMPENSATION BENEFITS, AND WAGE CONTINUATION BENEFITS
E.G. INJURY LEAVE) ONLY. INDIRECT COSTS ARE NOT INCLUDED.
IRECT COSTS PER MAN-YEAR IS THE COST PER FULL-TIME SANITATION
MPLOYEE PER YEAR BASED ON 2,000 HOURS PER YEAR.

NSTRUCTIONS: FIND YOUR ORGANIZATION'S USER NUMBER AND COMPARE
OW IT RANKS WITH THE AVERAGE AND OTHER IRIS USERS.
GOOD STANDING IS AN AVERAGE RATIO OF LESS THAN .50.
POOR STANDING IS AN AVERAGE RATIO OF GREATER THAN 1.25.

VG DIRECT COST/OSHA RECORDABLE INJ

RIS SER NO.	NO. OSHA RECORD INJ	AVG COST	AVG RATIO (AVG COST/AVG)
221	3	1,809	6.41
149	1	718	2.55
181	2	594	2.11
179	6	500	1.77
341	2	405	1.44
299	4	398	1.41
AVG	75	282	1.00
171	40	178	0.63
197	1	144	0.51
191	11	90	0.32
186	1	77	0.27
146	2	29	0.10
340	1	28	0.10
362	1	20	0.07

DIRECT COST PER MAN YEAR

IRIS USER NO.	MAN-HRS EXPOSURE	COSTS PER M-Y	AVG RATIO (COSTS/AVG)
221	3,963	2,739.44	30.76
341	834	1,944.18	21.83
149	1,669	860.62	9.67
179	18,771	319.42	3.59
299	10,311	309.17	3.47
181	9,386	253.36	2.85
171	101,679	139.70	1.57
AVG	475,584	89.04	1.00
197	3,285	87.67	0.98
146	2,920	40.41	0.45
191	62,571	31.68	0.36
186	6,257	24.61	0.28
362	2,346	17.05	0.19
340	9,386	5.97	0.07

SECTION II

THIRD QUARTER IRIS USER

INDUSTRY-WIDE DATA

The accidents received by IRIS from 54 users are covered in this section. FIGURE 2-1 gives operational background data on the IRIS users.

FREQUENCY, SEVERITY AND COSTS RATES

FIGURES 2-2 through 2-5 recap the frequency, severity and costs of injuries for this quarter:

- FIGURE 2-2: Summary of Injuries by Frequency, Severity and Costs. Compares the solid waste management industry with the national average for all industries.

- FIGURE 2-3: Comparison of Injury Rates and OSHA Days Lost for All Users. Compares the rates and days lost for the four quarters of 1976 and the three quarters of 1977, for each user, in user number order.

- FIGURE 2-4: Comparison of Direct Costs by Reporting Period for All Users. Compares the total costs and cost rates for the four quarters of 1976 and the three quarters of 1977, for each user, in user number order.

- FIGURE 2-5: Summary of Accident Factors for Selected Accident Characteristics with Highest Percent of OSHA Recordable Injuries, OSHA Days Lost and Direct Costs.

A few definitions of the terms used in the following FIGURES are:

- OSHA Recordable Injury: Defined by OSHA as a non-first aid injury.

- OSHA Incidence Rate. It is a measure of the frequency of injuries. The OSHA incidence rate is the number of OSHA recordable injuries per 200,000 hours of exposure. The base figure of "200,000 hours" is the standard figure used in OSHA statistics. It is roughly equivalent to 100 full-time employees working a year or 100 man-years (i.e., 100 employees working 40 hours per week for 50 weeks per year).

  OSHA incidence rates can be thought of as being roughly equivalent to the number of injuries that will occur to 100 employees during a year. Therefore, an OSHA incidence rate of 37 means that the organization is having 37 injuries per year for each 100 employees or that, on the average, 1 out of every 3 employees are being injured. The national average OSHA incidence rate for all industries has been around 10 for the last several years.

- Severity Rate. The severity rate is similar to the OSHA incidence rate, except that it reflects the number of OSHA days lost (i.e., workdays lost and light duty days), instead of the number of injuries, per 100 man-years worked. For example, a severity rate of 500 would mean roughly that an organization is losing 500 workdays for every 100 employees per year, or that on the average each employee is losing 5 days a year for on-the-job injuries.

- Direct Costs. Direct costs are normally those for which money was actually expended and include worker's compensation, medical expenses, and wage continuation benefits (e.g., injury leave). There are many indirect costs such as down time, replacement time, lost time by witnesses and supervisors, etc., which are not included in these figures. Indirect costs are estimated to be 5 times the direct costs in cities according to the National Safety Council.

- Average Direct Costs per OSHA Recordable Injury. An average direct cost per OSHA recordable injury of $500 means that on the average each OSHA recordable injury (i.e., a non-first aid case) is costing the organization $500!

- Direct Cost per Man-Year. It shows the cost per 2,000 hours or the average cost per year per employee. A direct cost per man-year of $200 would mean that on the average an organization's injuries are costing $200 per employee per year.

In reviewing these FIGURES, the data for the AVERAGE (shown on the FIGURES as AVG) is the most important because it summarizes the results for all users combined. After examining the AVERAGES, it is important to examine how great the range of rates between users is. Wide ranges are important because they show that it is possible to achieve lower rates of injury under given operating systems and safety programs.

FIGURE 2-1

DESCRIPTION OF USERS BY OPERATIONAL CHARACTERISTICS

User Number	M=Municipal P=Private	Geograph. Area	No. of Employees	Point of Collection: M=Mechanical A=Alley BY=Backyard w/o intermed. can BYT=Backyard-Tub BYC=Backyard-Cart CS=Curbside	Type of Shift	Type of Service Provided			
						Coll. Crew Size(s)			Disposal
						Resid.	Comm.	Resid. & Comm.	L=Landfill I=Incinerator T=Trans. Stn.
101	M	South	325	CS/A	T/F	4	4		L
103	M	Midwest	80	BY/CS/A	T	3			
109	M	Midwest	500	BY/BYC	F	4,3			
111	M	West	280	CS	T	2			L
113	P	Midwest	33	CS	T	1,2	1	2	
115	M	South	300	CS/A	T/F	3	1,2		L,I
125	M	South	650	CS	T		1	3	L,I
133	M	Northwest	86	CS/A/BY	T	2	1,2		L
136	M	South	140	M/A	F	3,1	1		L
140	M	South	844	CS	T	3			
146	M	South	295	CS/A	T	1,2,3	1,2		L,T
148	M	Northeast	267	CS	T			4	
149	M	Midwest	65	CS	T	2	2		

FIGURE 2-1 (Continued)

OPERATIONAL CHARACTERISTICS CONTINUED

User Number	M=Municipal P=Private	Geograph. Area	No. of Employees	Point of Collection: M=Mechanical A=Alley BY=Backyard w/o intermed. can BYT=Backyard-Tub BYC=Backyard-Cart CS=Curbside	Type of Shift	Type of Service Provided: Coll. Crew Size(s) Resid.	Comm.	Resid. & Comm.	Disposa L=Landfill I=Incinera T=Trans. S
157	M	West	203	CS	T	2	2	2	L,T
161	M	Midwest	125	CS/A	T	3,1			L
170	M	South	1481	CS/BYC/A	T	1,2,3,4,5	2,3,4,5		T
171	M	Midwest	370	A	T/F	3			
172	M	West	700	M/CS/A	T/F	1,3,2			L
178	M	South	629	CS	T	3	2		L,I
179	M	Northeast	532	CS	T	3	3		I,T
181	M	Midwest	278	BY	T	4			L
182	M	Northeast	470	CS	T	3			L
183	M	Midwest	308	CS	T	3	2		
186	M	South	297	CS	T	3	3		L
191	M	South	177	CS/A	T/F	3	1		L
197	M	West	86	CS	T	2	2,1	2	
201	M	Northeast	120	CS	T	3			

FIGURE 2-1 (Continued)

OPERATIONAL CHARACTERISTICS CONTINUED

User Number	M=Municipal P=Private	Geograph. Area	No. of Employees	Point of Collection: M=Mechanical A=Alley BY=Backyard w/o intermed. can BYT=Backyard-Tub BYC=Backyard-Cart CS=Curbside	Type of Shift	Type of Service Provided			
						Coll. Crew Size(s)			Disposal
						Resid.	Comm.	Resid. & Comm.	L=Landfill I=Incinerato: T=Trans. Stn
204	M	West	52	CS/A/M	F	1,3	1,3		L
207	M	West	205	BYC	T	3	2		
210	M	West	15	CS	T			1,2	
211	M	West	40	CS/A	T	2	2		L
212	M	West	130	CS/A	F			2	
215	M	South	60	CS/BY/BYT	T/F	3	1		
217	M	South	820	CS/A/BY	F	1,2,3			L,T
221	M	West	210	CS	T	2			
226	M	South	87	CS	T	3	1,3		
235	M	South	125	BYT/A/CS	T	3	3		L
236	M	South	103	CS	T/F	3	1		L
237	M	Midwest	90	A/BYC	T/F			3	
242	M	South	101	CS/BY/BYT/A	T/F	3	3		L,T

FIGURE 2-1 (Continued)

OPERATIONAL CHARACTERISTICS CONTINUED

User Number	M=Municipal P=Private	Geograph. Area	No. of Employees	Point of Collection: M=Mechanical A=Alley BY=Backyard w/o intermed. can BYT=Backyard-Tub BYC=Backyard-Cart CS=Curbside	Type of Shift	Type of Service Provided			
						Coll. Crew Size(s)			Dispos
						Resid.	Comm.	Resid. & Comm.	L=Landfil I=Inciner T=Trans.
260	M	West	168	CS/BYT/A/M	T	1,2	2,3		L
261	M	Midwest	8	CS/A	T	3			L
265	M	West	200	CS/BYT/BYC	T	1,2	2		L,T
272	M	Northeast	127	CS	T	3	3		L,I
275	M	Northeast	40	CS	T	3			
283	M	South	72	CS/A	T/F	2	3,1		L,T
285	M	Midwest	79	A/BYT/BYC	T	3			
286	M	West	8		F				L,T
292	M	Northwest	225	CS/A/BYT/BYC	F	1,3	2		L
295	M	South	179	CS/BY	T	4	2		L
296	M	West	43	CS/A/BY	F	1	2,1		
299	M	Northeast	113	CS	T	3	3		L
316	M	Northeast	475	CS/A/BYT	F	2,3	2,3		
318	M	Northwest	48	A/CS	F	3	3	3	L

FIGURE 2-1 (Continued)

OPERATIONAL CHARACTERISTICS CONTINUED

User Number	M=Municipal P=Private	Geograph. Area	No. of Employees	Point of Collection: M=Mechanical A=Alley BY=Backyard w/o intermed. can BYT=Backyard-Tub BYC=Backyard-Cart CS=Curbside	Type of Shift	Type of Service Provided			
						Coll. Crew Size(s)			Disposal
						Resid.	Comm.	Resid. & Comm.	L=Landfill I=Incinerato T=Trans. Stn
323	M	Northeast	171	CS	T			3	L
324	P	Midwest	17	CS/A/BYT/BYC	T			1,2	
325	M	Northwest	45	CS/A	F	2,1	1,2,3		L
326	M	South	23	CS	T	3	3		L
327	M	South	140	CS	T	3	2,3		I,L
328	M	Midwest	33	CS	T/F	2,1	2		T
329	P	West	20	CS	T	3	2,1		
330	M	South	60	A/CS	F	3	3	3	L
331	M	Midwest	35	CS/A	T	3			
332	P	West	14	-	F		2		
333	M	Northeast	43	BY	T	3			
335	P	Northeast	24	CS	T	3	1		L
336	P	Midwest	51	-	T		2,1		

User Number	M=Municipal P=Private	Geograph. Area	No. of Employees	Point of Collection: M=Mechanical A=Alley BY=Backyard w/o intermed. can BYT=Backyard-Tub BYC=Backyard-Cart CS=Curbside	Type of Shift	Type of Service Provided			
						Coll. Crew Size(s)			Disposal
						Resid.	Comm.	Resid. & Comm.	L=Landfil I=Inciner T=Trans.
338	M	Northeast	405	CS	F	3			
339	M	Northeast	405	CS	F	3			
340	M	Midwest	318	CS	T	3			
341	M	West	35	CS/A	T	2	2,1		
342	M	Midwest	25	CS	T	1	2		L
343	M	West	17	CS	F	1			
344	M	Midwest	40	CS/A	F	2,3	1		
345	M	Midwest	38	-	F				L,I,T
346	P	Midwest	70	A/CS	T	2		2	L
347	M	Northeast	60	CS	T			4	T
348	M	West	35	CS/A	T	1,2,3			
349	P	Midwest	40	CS/BYT	T	2	1		
350	M	West	57	CS	T	2	2	2	
351	M	West	10	CS/A	T	2	1	3	
352	M	Midwest	52	CS/A	F	3	3		

FIGURE 2-1 (Continued)

OPERATIONAL CHARACTERISTICS CONTINUED

User Number	M=Municipal P=Private	Geograph. Area	No. of Employees	Point of Collection: M=Mechanical A=Alley BY=Backyard w/o intermed. can BYT=Backyard-Tub BYC=Backyard-Cart CS=Curbside	Type of Shift	Type of Service Provided			
						Coll. Crew Size(s)			Disposal
						Resid.	Comm.	Resid. & Comm.	L=Landfill I=Incinerator T=Trans. Stn.
353	M	Midwest	20	CS	F			3	
354	M	Northeast	30	BYT	T	3			
355	P	Midwest	70	CS/BY	T	2	1,2		
356	P	Northeast	21	-	F		1		
358	M	South	18	BYC/CS	T	3	2		
359	P	Midwest	71	CS	T	2	1,2		
360	P	Northwest	30	-					L,T
361	M	West	44	-	F				L,T
362	M	Northeast	76	CS	T	4,3			
363	M	South	75	CS/A/BY	T	1,4	1		

FIGURE 2-2

SUMMARY OF INJURIES BY FREQUENCY, SEVERITY AND COSTS

FREQUENCY

- There were 1,541 cases reported by 54 of the 65 IRIS users on-line: 273 first aid cases, 520 non-fatal cases without lost workdays, 747 lost workday cases, and 1 permanent disability case. Total man-hours for this quarter was 6,602,171.

- The AVERAGE OSHA incidence rate was 38 for this quarter. This means that more than one out of every three solid waste industry employees will experience a non-first aid injury a year. The national rate for all industries was 10.4. Therefore, the solid waste industry is experiencing more than three times as many injuries as the average industry.

- IRIS users ranged in incidence rates from User No. 103 which was experiencing 174 non-first aid injuries per employee per year, to User No. 182 which was experiencing 2 injuries per 100 employees per year.

SEVERITY

(Days lost given are not final. These figures reflect what was received from IRIS users by December 31, 1977 and may be gross underestimates. For example, in the months since the publication of the first quarter Accident Trends for 1976, the OSHA severity rate has increased from 296 to 413, and not all cases are final yet.)

- So far, 748 cases this quarter incurred workdays lost and light duty days.

- 48% of the total cases resulted in workdays lost and/or light duty days. The national average for all industries is 33%. This means that the solid waste industry has almost a third times as many lost workday injuries as the average industry.

- The AVERAGE OSHA severity rate was 219. This means that on the average, each employee is losing 2.2 days per year for injuries. One user's rate was as high as 13.5 days lost per year per employee; several are losing zero days a year per employee.

- On the AVERAGE, each lost workday case resulted in 9.65 workdays lost so far.

DIRECT COSTS

(Costs given are not final. These figures reflect what was received from IRIS users by December 31, 1977, and may be gross underestimates. For example, first quarter of 1976's AVERAGE cost per OSHA recordable injury has gone up from 269 to 522.)

- Total direct costs so far for injuries that occurred during the first quarter was $360,966.

- The AVERAGE cost per OSHA recordable injury was $284.

- The AVERAGE cost per man-year was $110. This means that the average solid waste injury (non-first aid) cost $110 per full-time employee per year so far.

Starting: January, 1976

FIGURE 2-3

COMPARISON OF INJURY RATES AND OSHA DAYS LOST FOR ALL USERS

USER	OSHA INCIDENCE RATE QTR 1	QTR 2	QTR 3	QTR 4	SEVERITY RATE QTR 1	QTR 2	QTR 3	QTR 4	AVERAGE OSHA DAYS LOST QTR 1	QTR 2	QTR 3	QTR 4
101	12	33	44	20	47	387	101	145	6.50	27.00	8.33	21.14
103				106				365				3.44
109	36	48	50	22	195	174	197	126	8.03	8.15	7.65	6.27
111	68	76	79	54	1089	1182	667	292	23.39	22.05	11.59	14.62
113				28				0				0.00
115				29				160				10.55
125	31	35	42	20	876	370	560	446	35.54	13.03	16.72	32.48
133				12				86				10.50
136	0	0	0		0	0	0		0.00	0.00	0.00	
140	31	55			347	673			15.37	16.56		
146	26	21	34	36	537	136	142	250	66.50	20.60	9.82	12.93
148		23	5	18		149	0	61		12.86	0.00	9.25
149				125				1146				13.22
152				87				355				8.14
157				16				90				6.29
161	13	42	63	54	0	33	98	38	0.00	1.60	5.00	1.11
170				23				172				9.64
171	44	62	58	47	209	226	291	625	9.58	5.96	10.53	19.58
172	50	55	69	38	477	1104	439	590	14.28	27.51	11.23	32.79
178				18				106				11.07
179			13	29			142	431			19.17	24.21
181	44	49	66	51	369	147	261	427	11.48	4.26	6.89	13.04
182				12				22				4.60
183				38				161				6.31
186	13	24	24	23	69	276	101	108	12.25	22.00	8.22	7.36
191	57	45	93	47	188	149	230	505	4.00	5.11	4.62	15.73
197			38	31			317	1232			10.00	49.00
201				8				242				61.00
204	79	134	47	30	342	83	55	273	13.00	8.00	7.00	12.00
207	78	96	71	97	579	249	618	350	10.30	5.35	13.19	8.53
210	104	0	48	148	467	0	1332	3142	9.00	0.00	27.50	29.80
211	9	67	34	63	539	278	93	211	62.00	4.71	2.75	3.86
212	79	44			759	483			9.65	11.00		

FIGURE 2-3 (Continued)

USER	OSHA INCIDENCE RATE QTR 1	QTR 2	QTR 3	QTR 4	SEVERITY RATE QTR 1	QTR 2	QTR 3	QTR 4	AVERAGE OSHA DAYS LOST QTR 1	QTR 2	QTR 3	QTR 4
215	0	0	22	0	0	0	1587	0	0.00	0.00	72.67	0.00
217		43	59	43		192	152	70		11.22	12.38	8.67
221			10	76			47	993			4.50	13.07
226				18				0				0.00
235	23	56	40	36	113	0	0	51	6.00	0.00	0.00	2.80
236	89	103	73	57	1492	663	248	51	18.53	8.86	6.00	1.78
237	15	33	46	35	35	150	92	128	3.50	6.40	3.14	4.83
242	4	0	0	5	100	0	0	18	25.00	0.00	0.00	3.50
244	93	56	42	56	170	197	182	183	2.75	3.50	6.50	6.50
260	68	54	103	117	759	513	1178	1296	19.42	16.20	17.64	14.26
261	48	0	0	48	145	0	0	429	3.00	0.00	0.00	9.00
265	34	46	65	70	249	301	403	522	8.64	7.80	7.30	10.55
272	11	15	19	40	243	11	98	150	32.00	1.50	6.50	6.83
275		59	59	93		629	78	384		10.67	2.67	9.25
283	12	50	50	20	0	133	117	10	0.00	8.00	3.50	2.00
285	7	0			13	0			2.00	0.00		
286	0	0	0	39	0	0	0	0	0.00	0.00	0.00	0.00
292	3	10	7	5	284	19	14	7	86.00	4.33	2.75	3.00
295	17	20	19	29	64	20	101	212	4.75	2.00	15.50	13.33
296	19	75	57	55	476	2911	218	1765	25.00	51.50	5.75	32.17
299				44				155				28.00
316		53	60	29		606	425	336		17.05	12.82	18.14
318			78	46			2431	346			31.09	7.57
323				9				56				13.00
324		78	70	46		0	234	23		0.00	3.33	1.00
325		43	47	46		135	347	732		4.75	13.00	18.67
326			0	18			0	36			0.00	2.00
328				0				0				0.00
329		37	17	50		37	101	17		2.00	6.00	1.00
330		25	70	44		83	78	748		5.00	2.50	20.60
331			0	0			0	0			0.00	0.00
333			66	99			33	1219			2.00	37.00
336				23				62				2.67

FIGURE 2-3 (Continued)

USER	OSHA INCIDENCE RATE QTR 1	QTR 2	QTR 3	QTR 4	SEVERITY RATE QTR 1	QTR 2	QTR 3	QTR 4	AVERAGE OSHA DAYS LOST QTR 1	QTR 2	QTR 3	QTR 4
337			44	38			410	262			9.29	6.92
338			32	25			246	191			7.78	7.57
339			23	35			118	198			5.12	5.67
340				29				691				66.37
341			77	58			1367	737			19.50	12.75
343			50	75			99	50			2.00	2.00
344				11				80				7.00
345				10				632				65.00
346				29				95				3.25
347				20				20				3.00
348				34				192				8.50
349				49				121				10.00
350				42				96				3.00
351				51				101				2.00
353				35				122				7.00
354				129				388				9.00
355				33				16				1.50
358				88				4230				145.00
359				57				447				12.43
361				23				0				0.00
362				4				301				72.00
363				6				0				0.00
AVG.	34	44	45	33	413	386	292	281	17.34	14.48	11.60	14.52

FIGURE 2-3 (Continued)

COMPARISON OF INJURY RATES AND OSHA DAYS LOST FOR ALL USERS

Starting: January, 1977

USER	OSHA INCIDENCE RATE QTR 1	QTR 2	QTR 3	QTR 4	SEVERITY RATE QTR 1	QTR 2	QTR 3	QTR 4	AVERAGE OSHA DAYS LOST QTR 1	QTR 2	QTR 3	QTR 4
101	17	25	18		60	67	22		13.00	23.00	3.20	
103	88	208	174		175	2035	1226		5.60	14.29	10.13	
109	14	18	22		79	252	227		5.83	16.26	11.10	
111	38	47	82		346	205	613		13.65	7.68	11.08	
113	28	0	0		339	0	0		24.00	0.00	0.00	
115	32				516				19.37			
125	26	26	23		301	188	225		13.81	9.20	11.15	
133	38	30	0		608	141	0		31.60	6.17	0.00	
146	23	15	30		393	70	51		30.30	8.00	8.80	
148	13	10	0		163	21	0		24.25	3.25	0.00	
149	124	145	105		1197	835	254		17.86	9.20	4.83	
152	58	76	44		283	467	399		8.80	10.57	21.33	
157	48				97				4.18			
161	58				318				13.67			
170	31	42	53		276	206	241		10.19	6.50	6.86	
171	42	51	58		291	358	199		9.16	8.16	4.75	
172	52	64	61		237	220	422		13.00	11.94	12.77	
178	4				65				15.50			
179	36		11		426		212		17.05		32.09	
181	44	37	32		245	311	234		9.67	8.33	7.33	
182	15	25	2		86	154	11		8.90	7.36	12.00	
183	64	72	59		162	256	168		4.82	5.24	4.39	
186	35	17	0		158	41	0		7.31	3.87	0.00	
191	65	87	65		415	277	326		8.24	4.18	6.82	
197	25	12	57		130	129	1063		5.25	10.50	18.50	
201	25	47	43		53	317	229		6.50	16.00	59.00	
204	24				0				0.00			
207	84	58			457	313			12.47	9.12		
210	22	92	36		22	369	107		1.00	5.00	3.00	
211	88	37	65		399	73	213		8.33	3.33	6.60	
215	0	0	0		0	0	0		0.00	0.00	0.00	
217	41	55	54		41	48	30		5.40	4.67	4.30	
221	90	72	83		1269	1433	449		14.18	20.69	5.39	

FIGURE 2-3 (Continued)

USER	OSHA INCIDENCE RATE QTR 1	QTR 2	QTR 3	QTR 4	SEVERITY RATE QTR 1	QTR 2	QTR 3	QTR 4	AVERAGE OSHA DAYS LOST QTR 1	QTR 2	QTR 3	QTR 4
226	35				191				11.00			
235	46	47			502	352			12.91	7.57		
236	61	62	18		263	316	21		7.82	18.67	8.00	
237	45	24	62		683	56	147		33.40	4.67	4.22	
242	0				0				0.00			
244	54	94	67		2871	336	226		105.50	4.17	4.25	
260	80				714				14.24			
265	54	84	77		339	466	664		10.40	7.77	11.45	
272	11	7	32		11	4	175		1.50	1.00	8.17	
275	62	0	0		591	0	0		14.25	0.00	0.00	
283	24				34				2.33			
286	0	37	0		0	0	0		0.00	0.00	0.00	
292	9	14	12		195	16	24		26.17	7.00	7.67	
296	27	8	0		36	220	0		2.00	26.00	0.00	
299	72	93	38		144	236	200		5.20	8.71	18.50	
316	46	51	49		759	618	433		23.15	18.27	13.67	
318	33	38	55		273	876	148		13.67	27.40	8.00	
323	17				200				27.00			
324	23	0	47		680	0	234		29.00	0.00	10.00	
325	73	64	79		612	185	194		9.20	4.14	2.91	
326	51	16	0		2700	0	0		52.67	0.00	0.00	
328	0	121	40		0	1048	0		0.00	13.00	0.00	
329	17	48	0		0	0	0		0.00	0.00	0.00	
330	21	20	25		332	13	430		23.50	1.00	23.00	
331	30	15	0		0	0	0		0.00	0.00	0.00	
333	49	16	15		0	0	0		0.00	0.00	0.00	
336	16	15	7		23	15	0		3.00	2.00	0.00	
337	35	26	19		216	293	262		7.44	11.37	13.83	
338	33	18	7		240	89	40		8.12	4.80	5.50	
339	45	54	29		329	248	318		7.86	6.38	13.62	
340	36	0			280	0			18.55	0.00		
341	101		104		1885		1073		21.83		15.00	
343	72	96	44		24	72	244		1.00	1.50	11.00	

FIGURE 2-3 (Continued)

USER	OSHA INCIDENCE RATE QTR 1	QTR 2	QTR 3	QTR 4	SEVERITY RATE QTR 1	QTR 2	QTR 3	QTR 4	AVERAGE OSHA DAYS LOST QTR 1	QTR 2	QTR 3	QTR 4
344	69	49	88		552	312	1349		8.00	6.40	15.40	
345	59	40	39		285	20	39		5.80	1.00	2.00	
346	118				213				4.14			
347	34	59	38		68	388	102		3.33	9.83	5.33	
348	62	50	87		718	249	1084		11.50	8.33	12.50	
349	94	46	49		1175	0	425		25.00	0.00	17.50	
350	77	50	58		1902	299	471		43.50	7.50	12.25	
351	52	153	50		0	612	0		0.00	6.00	0.00	
352	125				589				33.00			
353	18				200				11.00			
354	83		99		0		99		0.00		5.00	
355	11	48	10		6	263	77		1.00	16.33	8.00	
358	58	27	0		232	0	0		4.00	0.00	0.00	
361	11				0				0.00			
362	21	32	23		267	394	152		15.75	20.00	10.00	
363	33	17	26		98	0	186		5.00	0.00	18.00	
AVG.	36	40	38		284	225	219		13.09	9.65	9.65	

Starting: January, 1976

FIGURE 2-4

COMPARISON OF DIRECT COSTS BY REPORTING PERIOD FOR ALL USERS

USER	TOTAL INJURY COSTS QTR 1	QTR 2	QTR 3	QTR 4	AVG. COST PER OSHA REC. INJ. QTR 1	QTR 2	QTR 3	QTR 4	AVERAGE COST PER MAN YEAR QTR 1	QTR 2	QTR 3	QTR 4
101	4,210	29,631	5,735	5,260	386	986	130	263	51	326	57	51
103				3,627				203				240
109	13,513	12,994	19,851	12,958	312	213	275	345	112	103	138	78
111	59,293	42,034	30,744	14,888	1,234	764	487	346	836	577	384	185
113				102				51				14
115				6,895				328				95
125	50,760	25,734	47,226	36,174	832	357	497	753	260	123	208	150
133				638				212				26
136	0	0	0		0	0	0		0	0	0	
140	39,842	69,843			711	688			219	378		
146	9,041	5,442	3,060	8,171	475	340	117	291	121	72	40	105
148		3,577	110	2,092		255	36	190		59	1	34
149				4,202				323				404
152				3,365				240				209
157				2,977				372				61
161	135	815	1,526	683	18	80	93	48	5	33	59	26
170				22,212				325				74
171	3,582	6,376	9,486	21,455	148	163	237	613	65	100	137	285
172	27,167	58,431	27,413	39,375	393	749	274	667	197	411	188	252
178				7,107				263				48
179			8,661	35,411			412	737			53	217
181	11,510	5,081	9,833	15,586	391	153	209	432	176	76	138	221
182				1,032				82				9
183				7,505				312				119
186	1,295	8,021	2,950	3,550	143	471	163	208	18	111	40	47
191	1,475	1,685	2,101	4,879	86	120	70	304	49	54	65	142
197			2,710	64,080			451	12,816			171	4,028
201				2,571				1,285				102
204	2,481	517	300	2,142	275	39	50	535	217	53	23	162
207	4,523	9,636	12,908	6,786	141	235	403	150	110	224	288	146
210	1,445	0	3,218	9,667	361	0	1,609	1,381	374	0	779	2,038
211	794	1,987	600	1,687	758	248	145	195	68	167	50	131
212	14,297	7,138			621	549			488	241		

FIGURE 2-4 (Continued)

USER	TOTAL INJURY COSTS QTR 1	QTR 2	QTR 3	QTR 4	AVG. COST PER OSHA REC. INJ. QTR 1	QTR 2	QTR 3	QTR 4	AVERAGE COST PER MAN YEAR QTR 1	QTR 2	QTR 3	QTR 4
215	0	0	5,725	0	0	0	1,908	0	0	0	416	0
217		87,664	36,713	18,317		956	259	163		415	155	70
221			1,045	14,110			253	491			27	382
226				60				20				3
235	1,185	725	240	886	197	48	21	88	44	26	8	32
236	12,768	9,550	8,223	1,442	608	329	357	80	541	340	261	45
237	604	1,813	1,583	1,925	201	259	143	218	30	85	66	84
242	6,877	0	0	278	6,877	0	0	139	274	0	0	7
244	706	904	748	962	117	226	249	240	109	127	104	135
260	2,317	5,620	8,797	17,683	110	330	258	442	75	178	266	518
261	159	0	0	960	159	0	0	960	76	0	0	457
265	2,820	8,216	14,019	9,500	214	455	519	306	74	211	335	213
272	1,861	109	1,224	1,444	620	27	244	131	70	4	46	52
275		1,437	272	1,297		239	45	144		141	26	134
283	119	1,346	1,890	173	59	147	210	43	7	74	105	8
285	61	0			61	0			4	0		
286	0	0	0	80	0	0	0	80	0	0	0	30
292	7,327	894	483	376	3,663	127	96	94	121	13	6	4
295	911	578	1,172	5,257	177	96	195	477	30	19	38	139
296	1,982	16,786	1,256	10,471	991	2,098	209	1,745	188	1,581	119	957
299				2,010				125				55
316		37,757	24,016	21,089		629	338	602		335	203	177
318			14,061	4,258			1,278	593			999	277
323				893				205				19
324		92	491	62		30	163	31		23	114	14
325		2,159	4,736	5,701		359	676	806		153	316	372
326			0	91			0	91			0	16
328				0				0				0
329		153	378	194		66	338	64		28	63	32
330		1,053	480	2,612		351	53	435		87	37	189
331			0	0			0	0			0	0
333			223	2,044			55	340			36	336
336				60				20				

FIGURE 2-4 (Continued)

USER	TOTAL INJURY COSTS QTR 1	QTR 2	QTR 3	QTR 4	AVG. COST PER OSHA REC. INJ. QTR 1	QTR 2	QTR 3	QTR 4	AVERAGE COST PER MAN YEAR QTR 1	QTR 2	QTR 3	QTR 4
337			11,442	7,664			817	638			360	241
338			6,431	4,968			714	709			226	178
339			3,152	6,265			394	522			90	182
340				15,012				682				195
341			9,864	4,848			896	597			691	350
343			341	453			170	151			84	113
344				318				318				36
345				1,670				1,670				162
346				619				154				45
347				331				110				22
348				1,172				390				132
349				729				182				88
350				481				120				51
351				64				64				32
353				238				119				41
354				1,193				198				256
355				165				27				9
358				3,953				1,317				1,153
359				2,061				187				105
361				40				20				4
362				1,934				1,934				80
363				31				31				1
AVG.	285,060	465,798	347,437	525,521	522	510	324	436	180	223	147	144

FIGURE 2-4 (Continued)

COMPARISON OF DIRECT COSTS BY REPORTING PERIOD FOR ALL USERS

Starting: January, 1977

USER	TOTAL INJURY COSTS QTR 1	QTR 2	QTR 3	QTR 4	AVG. COST PER OSHA REC. INJ. QTR 1	QTR 2	QTR 3	QTR 4	AVERAGE COST PER MAN YEAR QTR 1	QTR 2	QTR 3	QTR 4
101	2,808	4,636	2,897		147	136	111		25	33	19	
103	2,399	39,823	10,622		167	1,137	318		150	2,362	559	
109	9,361	30,631	34,905		356	968	759		53	175	178	
111	19,743	11,102	36,324		658	284	490		249	134	402	
113	1,286	0	0		643	0	0		181	0	0	
115	17,674				734				247			
125	26,994	16,606	22,679		442	259	359		113	66	83	
133	9,022	2,336	0		902	292	0		346	88	0	
146	21,552	4,187	4,093		1,197	347	157		279	52	47	
148	3,669	554	0		458	92	0		61	9	0	
149	7,598	3,761	2,886		584	235	240		727	341	252	
152	3,265	4,585	2,952		359	382	421		210	289	184	
157	3,006				130				63			
161	3,770				251				146			
170	32,198	29,022	28,544		353	237	175		110	99	93	
171	10,280	13,837	8,544		311	314	155		130	159	89	
172	23,439	15,074	34,719		282	139	315		147	89	191	
178	3,233				538				22			
179	22,753		9,636		392		535		142		57	
181	10,171	11,531	9,126		328	427	380		143	159	121	
182	3,337	5,931	505		222	228	252		32	56	4	
183	6,558	6,981	5,557		156	162	129		100	117	76	
186	4,388	1,628	0		168	125	0		59	21	0	
191	4,182	2,910	3,482		190	100	151		124	87	97	
197	1,124	1,458	5,301		281	729	530		69	89	304	
201	741	1,911	1,693		123	159	153		30	75	65	
204	350				116				27			
207	6,857	4,792			175	165			147	96		
210	80	1,767	437		80	353	218		17	325	78	
211	3,306	547	1,600		300	109	160		264	39	103	
215	0	0	0		0	0	0		0	0	0	
217	11,798	12,204	12,465		109	75	70		44	41	38	
221	24,148	31,783	9,688		706	1,059	235		635	758	196	

FIGURE 2-4 (Continued)

USER	TOTAL INJURY COSTS QTR 1	QTR 2	QTR 3	QTR 4	AVG. COST PER OSHA REC. INJ. QTR 1	QTR 2	QTR 3	QTR 4	AVERAGE COST PER MAN YEAR QTR 1	QTR 2	QTR 3	QTR 4
226	1,276				212				73			
235	6,068	9,807			466	700			214	325		
236	12,041	11,395	2,312		602	517	330		367	321	60	
237	13,784	902	2,664		1,253	150	162		564	36	102	
242	0				0				0			
244	15,247	1,799	1,346		3,811	257	269		2,074	241	179	
260	6,984				258				206			
265	6,452	8,258	13,292		258	196	324		140	165	248	
272	160	80	2,456		53	40	272		6	2	87	
275	1,872	0	0		312	0	0		193	0	0	
283	473				94				22			
286	0	20	0		0	20	0		0	7	0	
292	3,533	1,333	1,584		504	111	144		43	15	16	
296	440	1,364	0		146	1,364	0		39	115	0	
299	2,275	2,317	2,160		87	96	154		63	89	58	
316	50,532	41,512	29,613		918	628	455		424	318	223	
318	1,566	5,393	1,411		313	898	156		104	344	86	
323	2,676				380				66			
324	312	50	889		312	0	444		73	11	207	
325	8,345	3,049	5,235		758	304	402		555	194	316	
326	34,976	4	0		11,658	4	0		5,977	0	0	
328	0	644	65		0	214	65		0	259	25	
329	40	102	0		40	34	0		6	16	0	
330	1,749	139	2,394		583	46	598		123	9	149	
331	56	34	0		28	34	0		8	4	0	
333	79	43	20		26	43	20		12	7	3	
336	40	40	20		20	20	20		3	3	1	
337	5,740	8,350	7,757		521	1,043	1,292		185	269	244	
338	4,213	1,622	1,085		468	324	542		155	59	39	
339	6,495	7,744	10,665		433	430	1,066		194	231	310	
340	13,006	0			500	0			178	0		
341	18,009		8,972		1,286		560		1,295		583	
343	154	479	40		51	119	20		37	115	8	

FIGURE 2-4 (Continued)

USER	TOTAL INJURY COSTS QTR 1	QTR 2	QTR 3	QTR 4	AVG. COST PER OSHA REC. INJ. QTR 1	QTR 2	QTR 3	QTR 4	AVERAGE COST PER MAN YEAR QTR 1	QTR 2	QTR 3	QTR 4
344	2,687	1,265	6,045		447	253	604		308	123	529	
345	1,672	322	348		278	80	87		164	31	33	
346	1,101				68				81			
347	662	2,067	120		132	229	20		45	135	7	
348	3,870	1,086	4,288		645	217	428		402	108	371	
349	2,833	181	2,726		354	45	681		332	20	330	
350	6,595	1,907	2,041		942	381	340		720	189	196	
351	20	800	20		20	266	20		10	407	10	
352	3,593				256				320			
353	252				252				45			
354	206		587		51		117		42		115	
355	108	3,199	699		54	355	349		5	171	33	
358	495	8	0		247	8	0		143	2	0	
361	20				20				2			
362	2,888	9,407	1,808		577	1,175	301		122	370	68	
363	715	129	1,369		143	43	273		46	7	70	
AVG.	547,400	386,448	362,686		420	313	284		152	127	109	

FIGURE 2-5

SUMMARY OF ACCIDENT FACTORS FOR SELECTED ACCIDENT CHARACTERISTICS WITH HIGHEST PERCENT OF OSHA RECORDABLE INJURIES OSHA DAYS LOST AND DIRECT COSTS

Type of Characteristic	Factors with the:		
	Highest % of OSHA Recordable Injuries	Highest % of OSHA Days Lost	Highest % of Direct Costs
Activity	Lifting or dumping containers - 41% Getting off equipment - 7% Standing or walking - 7%	Lifting or dumping container - 36% Riding on Equipment - 8% Standing or walking - 7%	Lifting or dumping container - 36% Getting off equipment - 8% Carrying container - 8%
Accident Type	Overexertion involving container - 19% Insect bite - 8% Struck by waste - 5%	Overexertion involving container - 20% Fall on same level - 8% Vehicle movement involved accident - 8%	Overexertion involving container - 21% Fall on same level - 8% Slip on same level - 6%
Accident Site	On collection route at back of truck - 36% On collection route at curb - 13% On collection route in customer's yard - 12%	On collection route at back of truck - 30% On collection route at curb - 12% On collection route in customer's yard - 10%	On collection route at back of truck - 31% On collection route at curb - 12% On collection route in customer's yard - 10%
Nature of Injury	Sprain or strain - 40% Cut or puncture - 18% Bruise - 17%	Sprain or strain - 52% Bruise - 17% Fracture - 9%	Sprain or strain - 53% Bruise - 17% Cut or puncture - 9%
Part of Body	Back - 18% Leg - 8% Arm - 7%	Back - 25% Hand - 8% Ankle - 7%	Back - 25% Leg - 7% Shoulder - 7%

User Number _____

EXHIBIT 9

QSMR EVALUATION

How do you evaluate IRIS analysis of your injury problem? Do you agree or disagree with it? Is there any area that should receive more attention?

_____

_____

_____

_____

_____

_____

_____

What injury reduction programs have you, or do you plan to implement? Were they the result of IRIS recommendations?

_____

_____

_____

_____

_____

_____

_____

Has your organization made any operational changes, e.g., backyard to curb-side collection, rear to side loader? Please let IRIS know so that we can accurately evaluate your injury problem areas.

_____

_____

_____

_____

_____

411.061077

Sample QSMR

IRIS

EXHIBIT 10

Q S M R

QUARTERLY SAFETY MANAGEMENT REPORT

FOR USER No. 170

QUARTER: JANUARY 1 TO MARCH 31, 1977

DEVELOPED BY SAFETY SCIENCES, DIVISION OF WSA INC.,
FOR THE U.S. ENVIRONMENTAL PROTECTION AGENCY
OFFICE OF SOLID WASTE MANAGEMENT PROGRAMS
UNDER CONTRACT No. 68-03-0231

safety sciences Division of WSA Inc., 11772 Sorrento Valley Road
San Diego, CA 92121 (714) 755-9359 & 452-1010

The QSMR (Quarterly Safety Management Report) is developed quarterly for your organization using data gathered through IRIS (the Injury Reporting and Information System for solid waste management) from all users. This QSMR was developed individually for your organization (other IRIS users have their own QSMR) and concentrates on injuries related only to your establishment. A companion volume, ACCIDENT TRENDS for the solid waste management industry, is also published quarterly and accompanies this volume. It summarizes the data developed from IRIS for all users combined.

IRIS is currently made up of 82 users. All possible care is taken to insure data quality. The nature of the data and the reports, however, precludes complete accuracy. Not all cases are closed by the end of the quarter. These accidents continue to be monitored. Occasionally, full lost time and cost data is not available. Consequently, the totals for these categories may be underestimates. A concerted effort is made to correct the lost time and cost figures and improve IRIS collection methods.

The purpose of this and other IRIS publications is to disseminate new ideas and alternative methods in the solid waste field. IRIS serves as a clearinghouse in this regard, but does not promote or endorse any method or product. Implementation of QSMR suggestions should be done only after careful evaluation by each user and at each user's discretion.

SUMMARY OF YOUR ORGANIZATION'S

INJURIES FOR FIRST QUARTER

USER NO.: 170

QUARTER: January 1 through March 31, 1977

START-UP DATE: 10-01-76

This quarter your organization reported 115 injuries; 31 during January 30 during February, and 54 for March. Of this number:

25 were first-aid cases

12 Required medical treatment but did not result in lost time (i.e., non-fatal without lost workday cases)

78 were lost time cases

0 were premanent disability cases

0 were fatalities

We have only compiled the time lost and direct costs figures known as of June 1, 1977, not the final costs. From data obtained so far this quarter, your organization's injuries have resulted in:

791 workdays lost and light duty days

$ 30,460 for medical expenses, Workmen's Compensation benefits and pay for leave taken because of injuries.

So far the average lost time injury at your organization resulted in 10.14 workdays lost. The average "non-first-aid" injury cost $ 338 per injury.

Your organization's injury incidence rate was about 31 "non-first-aid" injuries per year for every 100 full-time employees. This rate is about 11% below the average, which was 35. This means your organization has the 34th lowest injury incidence rate compared with 82 IRIS users.

So far your organization's injury severity rate was about 274 workdays lost per year for every 100 full-time employees. This rate is about 7% Above the average, which was 256. This means that your organization has the 33rd Highest injury severity rate.

So far your organization's injury cost rate was about $ 10,500 per year for every 100 full-time employees. This rate is about 24% Below the average, which was $13,900. This means that your organization has the 38th Lowest injury cost rate.

Q S M R

IRIS USER NO.: 170

QUARTER: First, January 1 to March 31, 1976

TABLE OF CONTENTS

		Page
SUMMARY		ii
INTRODUCTION		vi
I.	Section I - DETAILED EVALUATION OF PROBLEM AREAS AND RECOMMENDATIONS	1-1
II.	Section II - IDENTIFICATION OF KEY INJURY PROBLEM AREAS	2-1
III.	Section III - OVERALL INJURY RATES	3-1
APPENDIX A - DETAILED DEFINITIONS		A-1
APPENDIX B - OPERATIONAL CHARACTERISTICS		B-1

LIST OF FIGURES

		Page
FIGURE 1-1	Detailed Description of First Quarter Accidents	1-5
FIGURE 1-2	Detailed Description of Fall on the Same Level	1-9
FIGURE 1-3	Detailed Description of Fall to a Different Level	1-10
FIGURE 1-4	Detailed Description of Slipped on Same Level	1-11
FIGURE 1-5	Detailed Description of Slipped to Different Level	1-12
FIGURES 2-1A-2-1C:	Activities Ranked from Highest to Lowest Percent of OSHA Recordable Injuries, Workdays Lost and Direct Costs	2-2
FIGURES 2-2A-2-2C:	Accident Types Ranked from Highest to Lowest Percent of OSHA Recordable Injuries, Workdays Lost and Direct Costs	2-5
FIGURES 2-3A-2-3C:	Accident Sites Ranked from Highest to Lowest percent of OSHA Recordable Injuries, Workdays Lost and Direct Costs	2-9
FIGURES 2-4A-2-4C:	Injury Types Ranked from Highest to Lowest Percent of OSHA Recordable Injuries, Workdays Lost and Direct Costs	2-12
FIGURE 2-5	Parts of Body Ranked from Highest to Lowest Percent of OSHA Recordable Injuries, Workdays Lost and Direct Costs	2-15
FIGURE 3-1	Number of Injuries Reported by Severity-Comparison of "IRIS" Users	3-2
FIGURE 3-2	Average Injury Rates by "IRIS" Users Ranked from Highest to Lowest	3-4
FIGURE 3-3	Average Workdays Lost per Lost Workday Case by "IRIS" Users Ranked from Highest to Lowest	3-7
FIGURE 3-4	Direct Costs by "IRIS" Users Ranked from Highest to Lowest	3-9

LIST OF FIGURES (continued)

		Page
FIGURE 3-5	Direct Costs for Lost Day Cases by "IRIS" Users Ranked from Highest to Lowest	3-12
FIGURES 3-6A-3-6B:	Comparison of Injury Rates and OSHA Days Lost for All Users (1976 & 1977)	3-14
FIGURES 3-7A-3-7B:	Comparison of Direct Costs by Reporting Period from All Users (1976 & 1977)	3-20

INTRODUCTION

The Quarterly Safety Management Report provides an individual injury analysis and specialized computer printouts. In Section I problem areas are identified and evaluated. Injury reduction measures tailored to the specific problem are suggested. An IRIS developed printout form known as "profiles" describes each injury in a sentence-like form and gives an overview of all injuries. Individual medical and lost time costs are listed for all injuries.

Section II takes the analysis begun in Section I a step further. Key injury problems are identified by the computer. All OSHA recordable cases are analyzed in terms of activity, accident type, accident site, injury type and parts of body. Each injury characteristic (e.g., activity) has a number of injury factors (e.g., lifting container) which are ranked from highest to lowest percent in terms of (a) OSHA Recordable Injuries, (b) OSHA Days Lost, (c) Direct Costs.

During the first quarter of 1977, 1,571 injuries were reported by 82 users whose man-hours of exposure totaled 7,266,342. The data represented by these figures appears in Section III and allows a comparison of injury frequency, severity and direct costs with other IRIS participants and the quarter's AVERAGE. Each user is identified by number only. Average ratios (organizational rate divided by the average rate) can be used to evaluate rates. The printouts for the most part are self-explanatory and include term definitions.

For more detailed explanations and examples of these terms see APPENDIX A. To facilitate comparison APPENDIX B, "Operational Characteristics" provides background information on each user.

SECTION I

DETAILED EVALUATION OF PROBLEM AREAS AND RECOMMENDATIONS

This quarter your organization reported 115 injuries, 25 of which were first aids. As the summary at the front of this QSMR indicates, your organization again has a good injury record. Your only rate which was above the average for all users was the severity rate of 274, which was 7% above the average. You can compare this quarter's injury rates with last quarter's in FIGURES 3-6 through 3-7.

Reviewing your more severe injuries (more than 10 days lost) this quarter, there are several injury patterns to be noted:

- Lifting container - 8 injuries, 194 days lost, $6,993.
- Traffic Accident - 4 injuries, 153 days lost, $5,339.
- Falls - 6 injuries, 116 days lost, $3,862.
- Caught in packing mechanism - 2 injuries, 30 days lost, $2,075.

Lifting Container Accidents - In only one of the lifting container accidents, the employee was handling a tote barrel. All of these indicated that the container was heavy, two of the containers had frozen waste and one had rocks. You should review the fourth quarter Accident Trends for specific countermeasures (e.g., employee training to test the container weight limits, etc.). Another contributing factor to your overexertion injuries is your collection method of backyard collection with the use of intermediate containers. This collection method has two drawbacks that contribute to overexertion injuries:

1. When lifting the customer's container to dump into a tote barrel, the employee has to lift it high. Consideration is given to sill heights of packers in the hopes of reducing overexertions at the back of the truck so the same should be applied to how high the employee has to lift at the backyard.

2. In your collection system the employee is handling a tote barrel which is two to three times heavier than the customer's container. The employee still has to lift this to dump into

the hopper. (You have eliminated one extra handling step by providing wheeled carts.) This method is defeating the purpose of regulating the weight of containers, especially since employees try to "pack" their intermediate containers.

Traffic Accidents - Your most severe injury this quarter was a traffic accident (99 days lost, $3,449 so far). The employee was driving when the V-bolt broke, causing the chassis to separate, overturning the packer. The report only indicated bruises to multiple parts of his body, and no other employees injured. A similar accident happened with one of the other IRIS users, causing three injuries. If this particular packer model is prone to this defect, all packers of this type should have their V-bolts examined immediately and checked on periodically.

Another traffic accident (29 days, $1,142) involved trying to avoid a car in the wrong lane. Again, no one else was indicated as injured. Since IRIS does not collect non-injury costs of traffic accidents (e.g., vehicle damage costs, property damage, etc.), the high cost of vehicle accidents is not accurately portrayed. In addition, employees can sustain very severe accidents, as our IRIS Newsflash repeatedly points out.

Two traffic accidents indicated that possibly employees need to pay better attention to where they stand in relation to the flow of traffic. One employee was coming from the back of the truck when a taxi hit his cart, and the cart struck his leg (14 days, $409). The other employee was walking away after "hitting the packer button" and a car ran over his foot.

In three other cases, the drivers were careless. In one case, the injured employee was in back of the truck when the driver shifted into reverse by mistake. In the second case the injured employee was placing brush into the packer when the truck rolled back into his leg; hand brakes should have been used. In the last case the driver went over a speed bump, which knocked the injured employee off the riding step. Fortunately, he only sustained a bruised arm.

Slips and falls are also prevalent with your type of collection because of the increased exposure to slippery surfaces (e.g., wet grass, oily driveways), objects on the ground (e.g., boards, nails, glass), uneven surfaces (e.g., cracked sidewalks, holes), and objects protruding from the ground (e.g., sprinkler heads). However, your organization has a lower than average incidence of slips and falls. Can you explain this? Is it perhaps due to the use of safety shoes by most of your employees?

Thirty-one out of the 115 injuries this quarter were either slips or falls. Twenty-three of these were OSHA recordable and resulted in 234 days lost (30%) and $8,777 in direct costs (29%). Six of those were the result of ice, four of of wet surfaces, five of objects on the ground, five of depressions and one of an oily surface. In nine cases the employee was either getting on or off the vehicle.

Two dismounting cab accidents indicates the need for additional safety instructions. One employee jumped off and fractured his foot (22 days, $770 so far). Another employee failed to wait until the vehicle came to a complete stop before dismounting and sprained her back.

An in-depth analysis of slips and falls is planned for the first quarter Accident Trends report. It will cover seasonal comparisons as well as regional. The FIGURES at the end of this section single out various types of slips and falls.

Packing Mechanism Accidents - IRIS noted several accidents that involved disregard for the dangers of an operating packing mechanism. Your organization should take steps to reduce these before a permanent disability results.

In the most serious accident (17 days, $632), several safety rules were broken. The employee was pulling on a plastic bag that was stuck in the hopper. However, he did not release his grip on the controls and accidentally pushed the wrong button. His arm and hand were out and bruised by the blade. Employee training on the proper procedure in operating the packing mechamism as well as a possible equipment modification to recess the start button are effective countermeasures against this accident.

Two other accidents involving handling brush indicates employees consider it "safe" to dump brush into an operating hopper. One employee was putting brush in when the blade came down and cut his arm and hand (13 days, $1,443 so far). The second employee was putting a limb into an operating hopper when it swung around and hit him in the eye. Since your employees do not wear safety glasses, he was lucky to not permanently injure his eye (no days lost, $37).

Your orgnaization appears to have a low incidence of being struck by objects ejected (only one this quarter). Is this due to strict safety rules concerning this or equipment modifications?

Brush Collection - IRIS noted that your organization has several injuries this quarter from the use of forks in brush collection (two overexertions, 39 days, $1,292). Has your organization considered separate brush collection with the use of specialized equipment (e.g., front loaders)?

USER NO. 170
DETAILED DESCRIPTION OF
FIRST QUARTER ACCCIDENTS

REPORTING PERIOD: JANUARY - MARCH 1977

INSTRUCTIONS: EXAMINE THIS DATA TO DETERMINE THE CHARACTERISTICS OF YOUR ORGANIZATION'S FIRST QUARTER ACCCIDENTS. THIS PROFILE IS A FORMATTED SENTENCE CONSISTING OF ACCIDENT TYPE, ACTIVITY, NATURE OF INJURY AND PART OF BODY.

PROFILE	NO. INJ	DAYS	COSTS
EMPLOYEE OVEREXERTED SELF WITH STD MTL CONT WHICH WAS UNUSUALLY HEAVY WHILE LIFTING STD MTL CONT RESULTING IN SPRAIN OR STRAIN TO BACK .	3	84	2566
EMPLOYEE OVEREXERTED SELF WITH STD MTL CONT WHICH WAS HVY (WATER FILLED) WHILE LIFTING STD MTL CONT RESULTING IN SPRAIN OR STRAIN TO BACK .	1	8	324
EMPLOYEE FELL FROM WET VEHICLE ONTO PAVEMENT WHILE REFUELING VEH OR ROUTINE MAINT RESULTING IN SPRAIN OR STRAIN TO NECK .	1	0	0
EMPLOYEE OVEREXERTED SELF WITH STD MTL CONT WHICH WAS HVY (FROZEN WASTE) WHILE LIFTING STD MTL CONT RESULTING IN SPRAIN OR STRAIN TO BACK .	2	25	1619
EMPLOYEE WAS STRUCK BY BLEACH WHICH FELL OUT OF TOP OF CONT WHILE LIFTING TO DUMP STD MTL CONT RESULTING IN CHEMICAL BURN TO EYES .	1	2	182
EMPLOYEE FELL ON ICY GROUND WHILE CARRYING STD MTL CONT RESULTING IN SPRAIN OR STRAIN TO BACK .	1	15	464
EMPLOYEE WAS INJURED WHEN VEH OVERTURNED WHILE DRIVING RESULTING IN BRUISE TO CHEST .	1	99	3449
EMPLOYEE FELL ON ICY PAVEMENT WHILE STANDING OR WALKING RESULTING IN SPRAIN OR STRAIN TO WRIST .	1	28	858
EMPLOYEE VEH WAS HIT BY ANOTHER VEH AND HE STRUCK AGNST VEH WHILE RIDING ON CAB OF VEH RESULTING IN BRUISE TO KNEE .	1	1	74
EMPLOYEE WAS BITTEN BY ANIMAL WHILE LIFTING TOTE BARREL RESULTING IN CUT/PUNCTURE TO LEG .	1	0	34
EMPLOYEE FELL FROM ICY INCLINED GROUND WHILE STANDING OR WALKING RESULTING IN SPRAIN OR STRAIN TO SHOULDER .	1	11	459
EMPLOYEE FELL ON ICY PAVEMENT WHILE STANDING OR WALKING RESULTING IN SPRAIN OR STRAIN TO NECK .	1	7	364
EMPLOYEE FELL FROM RUNNING BOARD ONTO GROUND WHILE GETTING OFF RUNNING BOARD RESULTING IN BRUISE TO LEG .	1	0	0
EMPLOYEE OVEREXERTED SELF WITH NSTD MTL CONT WHICH WAS UNUSUALLY HEAVY AND HNDLD WITH COWRKR WHILE DUMPING NSTD MTL CONT RESULTING IN SPRAIN OR STRAIN TO WRIST .	1	3	133
EMPLOYEE WAS STRUCK BY GLASS WHICH FELL OUT OF TOP OF CONT WHILE DUMPING STD MTL CONT RESULTING IN CUT/PUNCTURE TO HAND .	1	3	107
EMPLOYEE FELL FROM ICY INCLINED PAVEMENT WHILE PUSHING OR PULLING WHEELED CART RESULTING IN BRUISE TO LEG .	1	5	215
EMPLOYEE WAS INJURED WHEN VEH BECAME OUT OF CONTROL AND HE MADE SUDDEN MOVEMENT WHILE DRIVING RESULTING IN SPRAIN OR STRAIN TO BACK .	1	29	1142
EMPLOYEE FELL ON OBJ ON GROUND WHILE CARRYING STD MTL CONT RESULTING IN SPRAIN OR STRAIN TO BACK .	1	9	349
EMPLOYEE OVEREXERTED SELF WITH STD MTL CONT WHICH WAS UNUSUALLY HEAVY WHILE LIFTING STD MTL CONT RESULTING IN SPRAIN OR STRAIN TO SHOULDER .	1	5	209
EMPLOYEE OVEREXERTED SELF WITH STD MTL CONT WHICH WAS HVY (FROZEN WASTE) WHILE DUMPING STD MTL CONT RESULTING IN SPRAIN OR STRAIN TO ELBOW .	1	1	71
EMPLOYEE FELL FROM WET INCLINED GROUND WHILE PUSHING OR PULLING WHEELED CART RESULTING IN SPRAIN OR STRAIN TO LEG .	1	3	122
EMPLOYEE FELL ON ICY GROUND WHILE STANDING OR WALKING RESULTING IN SPRAIN OR STRAIN TO ARM .	1	0	0
EMPLOYEE FELL ON WET PAVEMENT WHILE PICKING UP LOOSE WASTE RESULTING IN SPRAIN OR STRAIN TO ANKLE .	1	41	1393
EMPLOYEE WAS BITTEN BY ANIMAL WHILE CARRYING STD MTL CONT RESULTING IN CUT/PUNCTURE TO ARM .	1	0	23
EMPLOYEE FELL ON DEPRESSION IN STEPPING DOWN WHILE GETTING OFF RUNNING BOARD RESULTING IN SPRAIN OR STRAIN TO ANKLE .	1	0	0
EMPLOYEE MADE SUDDEN MOVEMENT IN CATCHING EQUIPMENT PART WHILE LIFTING OTHER VEH PART RESULTING IN SPRAIN OR STRAIN TO THUMB .	1	0	64
EMPLOYEE WAS CAUGHT IN PACKER BLADE WHILE OPERATING PACKING MECH LEVER RESULTING IN CUT/PUNCTURE TO ARM .	1	17	632
EMPLOYEE STRUCK SELF WITH STD MTL CONT WHICH WAS FULL AND HAD SLIPPED FROM HIS HANDS WHILE LIFTING STD MTL CONT RESULTING IN SPRAIN OR STRAIN TO FOOT .	1	1	49

PROFILE	NO. INJ	DAYS	COSTS
EMPLOYEE WAS STRUCK BY VEH WHILE STANDING OR WALKING RESULTING IN BRUISE TO LEG .	1	8	299
EMPLOYEE STEPPED ON GLASS WHILE CARRYING UNK CONT TYPE RESULTING IN CUT/PUNCTURE TO FOOT .	1	2	78
EMPLOYEE SLIPPED FROM SLIPPERY CURB ONTO PAVEMENT WHILE PICKING UP LOOSE WASTE RESULTING IN SPRAIN OR STRAIN TO ANKLE .	1	2	64
EMPLOYEE STRUCK AGAINST OTHER OBJECT WHILE DOING JANITORIAL WORK RESULTING IN CUT/PUNCTURE TO FINGERS .	1	1	47
EMPLOYEE FELL FROM WET INCLINED GROUND WHILE CARRYING FURNITURE RESULTING IN SPRAIN OR STRAIN TO LEG .	1	21	691
EMPLOYEE STRUCK AGAINST GLASS WHILE COMPACTING WASTE IN TOTE BARREL RESULTING IN CUT/PUNCTURE TO HAND .	1	2	71
EMPLOYEE WAS CAUGHT IN PACKER BLADE WHILE REFUELING VEH OR ROUTINE MAINT RESULTING IN CUT/PUNCTURE TO FINGERS .	1	2	122
EMPLOYEE GOT WASTE PARTICLES IN EYE WHILE EMPTYING VEH RESULTING IN EYE IRRITATION TO EYES .	1	1	44
EMPLOYEE SLIPPED STEPPING ON DEPRESSION WHILE PUSHING OR PULLING WHEELED CART RESULTING IN SPRAIN OR STRAIN TO ANKLE .	1	0	0
EMPLOYEE FELL FROM INCLINED GROUND WHILE PUSHING OR PULLING WHEELED CART RESULTING IN SPRAIN OR STRAIN TO ANKLE .	1	4	301
EMPLOYEE WAS HURT BY HANDLING CARDBOARD BOX WHICH HAD PROTRUDING GLASS WHILE PUSHING OR PULLING CARDBD BOX RESULTING IN CUT/PUNCTURE TO FINGERS .	1	7	258
EMPLOYEE WAS STRUCK BY WHEELED CART WHILE STANDING OR WALKING RESULTING IN BRUISE TO LEG .	1	14	409
EMPLOYEE MADE SUDDEN MOVEMENT IN STEPPING DOWN WHILE GETTING OFF RUNNING BOARD RESULTING IN SPRAIN OR STRAIN TO ANKLE .	1	12	368
EMPLOYEE GOT WASTE PARTICLES IN EYE WHILE PICKING UP LOOSE WASTE RESULTING IN EYE IRRITATION TO EYES .	1	2	112
EMPLOYEE GOT AIRBORNE PARTICLES IN EYE WHILE CHECKING EQUIP MALFNCTN RESULTING IN EYE IRRITATION TO EYES .	2	0	24
EMPLOYEE OVEREXERTED SELF WITH STD MTL CONT WHICH WAS UNUSUALLY HEAVY WHILE DUMPING STD MTL CONT RESULTING IN SPRAIN OR STRAIN TO TRUNK .	1	8	278
EMPLOYEE FELL FROM SLIPPERY RUNNING BOARD ONTO PAVEMENT WHILE GETTING OFF RUNNING BOARD RESULTING IN BRUISE TO KNEE .	1	0	0
EMPLOYEE FELL ON OILY PAVEMENT WHILE STANDING OR WALKING RESULTING IN SPRAIN OR STRAIN TO SHOULDER .	1	10	626
EMPLOYEE OVEREXERTED SELF WITH TOTE BARREL WHICH WAS FULL WHILE DUMPING TOTE BARREL RESULTING IN SPRAIN OR STRAIN TO BACK .	1	3	140
EMPLOYEE OVEREXERTED SELF WITH PLASTIC CAN WHICH WAS FULL WHILE DUMPING PLASTIC CAN RESULTING IN SPRAIN OR STRAIN TO HAND .	1	4	139
EMPLOYEE OVEREXERTED SELF WITH HANDTOOL WHILE CLEARING WASTE W HANDTOOL RESULTING IN SPRAIN OR STRAIN TO BACK .	1	26	873
EMPLOYEE OVEREXERTED SELF WITH STD MTL CONT WHICH WAS HVY (ROCKS) WHILE LIFTING STD MTL CONT RESULTING IN SPRAIN OR STRAIN TO ABDOMEN .	1	0	35
EMPLOYEE OVEREXERTED SELF WITH STD MTL CONT WHICH WAS FULL WHILE DUMPING STD MTL CONT RESULTING IN SPRAIN OR STRAIN TO BACK .	1	2	130
EMPLOYEE FELL ON GROUND WHILE STANDING OR WALKING RESULTING IN SPRAIN OR STRAIN TO WRIST .	1	2	125
EMPLOYEE WAS BITTEN BY ANIMAL WHILE STANDING OR WALKING RESULTING IN CUT/PUNCTURE TO LEG .	3	0	40
EMPLOYEE FELL ON DEPRESSION WHILE CARRYING STD MTL CONT RESULTING IN SPRAIN OR STRAIN TO LEG .	1	0	0
EMPLOYEE OVEREXERTED SELF WITH STD MTL CONT WHICH WAS HVY (PAPER) WHILE LIFTING STD MTL CONT RESULTING IN SPRAIN OR STRAIN TO BACK .	1	7	224
EMPLOYEE STRUCK SELF WITH TAILGATE WHILE REPAIRING EQUIP W HANDTOOL RESULTING IN BRUISE TO FOOT .	1	0	0
EMPLOYEE STRUCK SELF WITH OTHER OBJECT WHILE GETTING OFF CAB OF VEH RESULTING IN BRUISE TO FACE .	1	0	0
EMPLOYEE FELL FROM SLIPPERY INCLINED GRASS WHILE PUSHING OR PULLING WHEELED CART RESULTING IN SPRAIN OR STRAIN TO BACK .	1	9	322
EMPLOYEE OVEREXERTED SELF WITH STD MTL CONT WHICH WAS HVY (ROCKS) WHILE LIFTING STD MTL CONT RESULTING IN SPRAIN OR STRAIN TO BACK .	1	30	985
EMPLOYEE OVEREXERTED SELF WITH STD MTL CONT WHICH WAS HVY (YARD CLIPPINGS) WHILE LIFTING STD MTL CONT RESULTING IN SPRAIN OR STRAIN TO SHOULDER .	1	1	45
EMPLOYEE WAS STRUCK BY UNBUNDLED SHRUBBERY WHICH WAS SWINGING AROUND IN HOPPER WHILE PUSHING OR PULLING UNBUNDLED SHRUBBERY RESULTING IN CUT/PUNCTURE TO EYES .	1	0	37
EMPLOYEE OVEREXERTED SELF WITH WOOD WHILE LIFTING WOOD RESULTING IN SPRAIN OR STRAIN TO SHOULDER .	1	7	238
EMPLOYEE WAS STRUCK BY FURNITURE WHILE LIFTING TO DUMP FURNITURE RESULTING IN CUT/PUNCTURE TO EARS .	1	1	49

PROFILE	NO. INJ	DAYS	COSTS
EMPLOYEE OVEREXERTED SELF WITH NSTD MTL CONT WHICH WAS FULL WHILE LIFTING NSTD MTL CONT RESULTING IN SPRAIN OR STRAIN TO BACK .	1	4	218
EMPLOYEE SLIPPED STEPPING ON OBJ ON GROUND IN STEPPING DOWN WHILE GETTING OFF STEP OF VEH RESULTING IN SPRAIN OR STRAIN TO KNEE .	1	3	178
EMPLOYEE FELL FROM TAILGATE ONTO PAVEMENT WHILE UNLOADING RESULTING IN BRUISE TO BACK .	1	0	0
EMPLOYEE STRUCK SELF WITH BUNDLED SHRUBBERY WHILE LIFTING BUNDLED SHRUBBERY RESULTING IN EYE IRRITATION TO EYES .	1	0	0
EMPLOYEE SLIPPED WHILE ON CAB OF VEH AND STRK AGNST INSIDE OF CAB WHILE DRIVING RESULTING IN BRUISE TO ANKLE .	1	0	0
EMPLOYEE STEPPED ON NAIL WHILE STANDING OR WALKING RESULTING IN CUT/PUNCTURE TO TOES .	1	0	15
EMPLOYEE FELL ON WASTE ON GROUND WHILE STANDING OR WALKING RESULTING IN BRUISE TO ELBOW .	1	5	165
EMPLOYEE FELL FROM CAB OF VEH ONTO FLOOR WHILE DRIVING RESULTING IN CUT/PUNCTURE TO SHOULDER .	1	19	620
EMPLOYEE WAS STRUCK BY GLASS WHICH WAS EJTD FROM HOPPER WHILE STANDING OR WALKING RESULTING IN CUT/PUNCTURE TO FACE .	1	0	0
EMPLOYEE WAS CAUGHT BETWEEN TWO OBJECTS WHILE LIFTING TO DUMP CARDBD SLATS RESULTING IN BRUISE TO FINGERS .	1	0	20
EMPLOYEE OVEREXERTED SELF WITH SHOVEL/FORK WHILE LIFTING TO DUMP UNBUNDLED SHRUBBERY RESULTING IN SPRAIN OR STRAIN TO CHEST .	1	13	399
EMPLOYEE OVEREXERTED SELF WITH SHOVEL/FORK WHILE CLEARING WASTE W HANDTOOL RESULTING IN SPRAIN OR STRAIN TO TRUNK .	1	0	0
EMPLOYEE WAS STRUCK BY VEH WHILE STANDING OR WALKING RESULTING IN BRUISE TO FOOT .	1	3	124
EMPLOYEE WAS BITTEN BY ANIMAL WHILE LIFTING UNK CONT TYPE RESULTING IN CUT/PUNCTURE TO LEG .	1	2	75
EMPLOYEE CONTACTED ALLERGENIC UNKNOWN WASTE WHILE DOING REPETITIOUS WORK RESULTING IN DERMATITIS TO HAND .	1	1	51
EMPLOYEE FELL ON WASTE ON GROUND WHILE CARRYING STD MTL CONT RESULTING IN SPRAIN OR STRAIN TO ANKLE .	1	1	49
EMPLOYEE OVEREXERTED SELF WITH TOTE BARREL WHICH WAS UNUSUALLY HEAVY WHILE LIFTING TO DUMP TOTE BARREL RESULTING IN SPRAIN OR STRAIN TO BACK .	1	18	441
EMPLOYEE FELL FROM RUNNING BOARD ONTO PAVEMENT WHILE GETTING OFF CAB OF VEH RESULTING IN SPRAIN OR STRAIN TO BACK .	1	0	0
EMPLOYEE OVEREXERTED SELF WITH TOTE BARREL WHICH WAS FULL WHILE LIFTING TOTE BARREL RESULTING IN SPRAIN OR STRAIN TO TRUNK .	1	0	0
EMPLOYEE WAS CAUGHT IN PACKER BLADE WHILE DUMPING UNBUNDLED SHRUBBERY RESULTING IN CUT/PUNCTURE TO ARM .	1	13	1443
EMPLOYEE WAS STRUCK BY VEH WHILE LIFTING TO DUMP UNBUNDLED SHRUBBERY RESULTING IN BRUISE TO KNEE .	1	11	339
EMPLOYEE FELL ON WASTE ON GROUND WHILE LIFTING BUNDLED SHRUBBERY RESULTING IN SPRAIN OR STRAIN TO WRIST .	1	1	49
EMPLOYEE SLIPPED STEPPING ON PAVEMENT IN STEPPING DOWN WHILE GETTING OFF RUNNING BOARD RESULTING IN SPRAIN OR STRAIN TO ANKLE .	1	0	0
EMPLOYEE WAS BITTEN BY ANIMAL WHILE STANDING OR WALKING RESULTING IN CUT/PUNCTURE TO ARM .	1	3	142
EMPLOYEE STRUCK SELF WITH NSTD MTL CONT WHICH WAS UNUSUALLY HEAVY WHILE LIFTING TO DUMP NSTD MTL CONT RESULTING IN BRUISE TO KNEE .	1	11	345
EMPLOYEE FELL ON DEPRESSION WHILE STANDING OR WALKING RESULTING IN BRUISE TO KNEE .	1	4	156
EMPLOYEE STRUCK SELF WITH HAMMER WHILE REPAIRING CONT W HANDTOOL RESULTING IN BRUISE TO ANKLE .	1	3	122
EMPLOYEE SLIPPED FROM CAB OF VEH IN STEPPING DOWN WHILE GETTING OFF CAB OF VEH RESULTING IN FRACTURE TO FOOT .	1	22	770
EMPLOYEE WAS STRUCK BY OBJ HANDLED BY COWORKER WHILE CLEARING WASTE W HANDTOOL RESULTING IN BRUISE TO EYES .	1	0	0
EMPLOYEE OVEREXERTED SELF WITH EQUIPMENT PART WHILE LIFTING OTHER WASTE RESULTING IN SPRAIN OR STRAIN TO BACK .	1	5	178
EMPLOYEE SLIPPED STEPPING ON DEPRESSION WHILE CARRYING TOTE BARREL RESULTING IN SPRAIN OR STRAIN TO ANKLE .	1	5	178
EMPLOYEE STRUCK SELF WITH UNBUNDLED SHRUBBERY WHILE LIFTING TO DUMP UNBUNDLED SHRUBBERY RESULTING IN ABRASIONS TO NOSE .	1	0	0
EMPLOYEE STEPPED ON GLASS WHILE GETTING ON RUNNING BOARD RESULTING IN CUT/PUNCTURE TO FOOT .	1	4	174

PROFILE	NO. INJ	DAYS	COSTS
EMPLOYEE OVEREXERTED SELF WITH PLASTIC BAG WHICH WAS HVY (ROCKS) WHILE LIFTING PLASTIC BAG RESULTING IN SPRAIN OR STRAIN TO BACK .	1	3	115
EMPLOYEE WAS INJURED WHEN VEH WENT OVER BUMP OR DEPRESSION AND HE FELL WHILE RIDING ON STEP OF VEH RESULTING IN BRUISE TO ARM .	1	0	20
EMPLOYEE OVEREXERTED SELF WITH STD MTL CONT WHICH WAS FULL WHILE LIFTING TO DUMP STD MTL CONT RESULTING IN SPRAIN OR STRAIN TO NECK .	1	0	20
EMPLOYEE OVEREXERTED SELF WITH PLASTIC BAG WHICH WAS HVY (TIGHTLY PACKED) WHILE LIFTING PLASTIC BAG RESULTING IN SPRAIN OR STRAIN TO BACK .	1	1	54
EMPLOYEE OVEREXERTED SELF WITH STD MTL CONT WHICH WAS UNUSUALLY HEAVY WHILE LIFTING TO DUMP STD MTL CONT RESULTING IN SPRAIN OR STRAIN TO BACK .	1	37	1382
EMPLOYEE OVEREXERTED SELF WITH WHEELED CART WHILE DUMPING WHEELED CART RESULTING IN SPRAIN OR STRAIN TO BACK .	1	2	76
EMPLOYEE GOT WASTE PARTICLES IN EYE WHILE DUMPING STD MTL CONT RESULTING IN EYE IRRITATION TO EYES .	1	0	0
EMPLOYEE WAS HURT BY HANDLING SHARP OBJ WHILE PICKING UP LOOSE WASTE RESULTING IN CUT/PUNCTURE TO FINGERS .	1	0	0
EMPLOYEE FELL FROM STEP OF VEH ONTO PAVEMENT WHILE GETTING OFF STEP OF VEH RESULTING IN CUT/PUNCTURE TO BACK .	1	7	259
EMPLOYEE OVEREXERTED SELF WITH PLASTIC BAG WHICH WAS UNUSUALLY HEAVY WHILE LIFTING PLASTIC BAG RESULTING IN SPRAIN OR STRAIN TO SHOULDER .	1	1	49
EMPLOYEE OVEREXERTED SELF WITH BUNDLED SHRUBBERY WHILE LIFTING TO DUMP BUNDLED SHRUBBERY RESULTING IN SPRAIN OR STRAIN TO SHOULDER .	1	4	138
EMPLOYEE WAS HURT BY HANDLING PRINTED MATTER WHICH HAD PROTRUDING GLASS WHILE LIFTING PRINTED MATTER RESULTING IN CUT/PUNCTURE TO HAND .	1	0	0
EMPLOYEE WAS BITTEN BY ANIMAL WHILE CARRYING NSTD MTL CONT RESULTING IN CUT/PUNCTURE TO LEG .	1	0	0
TOTAL	115	791	30460

FIGURE 1-2

USER NO. 170
DETAILED DESCRIPTION OF
FALL ON SAME LEVEL

REPORTING PERIOD: JANUARY - MARCH 1977

INSTRUCTIONS: EXAMINE THIS DATA TO DETERMINE THE CHARACTERISTICS OF YOUR ORGANIZATION'S FALL ON SAME LEVEL. THIS PROFILE IS A FORMATTED SENTENCE CONSISTING OF ACTIVITY, ACCIDENT TYPE, NATURE OF INJURY AND PART OF BODY.

PROFILE	NO. INJ	DAYS	COSTS
EMPLOYEE WAS CARRYING STD MTL CONT AND HE FELL ON ICY GROUND RESULTING IN SPRAIN OR STRAIN TO BACK .	1	15	464
EMPLOYEE WAS STANDING OR WALKING AND HE FELL ON ICY PAVEMENT RESULTING IN SPRAIN OR STRAIN TO WRIST .	1	28	858
EMPLOYEE WAS STANDING OR WALKING AND HE FELL ON ICY PAVEMENT RESULTING IN SPRAIN OR STRAIN TO NECK .	1	7	364
EMPLOYEE WAS CARRYING STD MTL CONT AND HE FELL ON OBJ ON GROUND RESULTING IN SPRAIN OR STRAIN TO BACK .	1	9	349
EMPLOYEE WAS STANDING OR WALKING AND HE FELL ON ICY GROUND RESULTING IN SPRAIN OR STRAIN TO ARM .	1	0	0
EMPLOYEE WAS PICKING UP LOOSE WASTE AND HE FELL ON WET PAVEMENT RESULTING IN SPRAIN OR STRAIN TO ANKLE .	1	41	1393
EMPLOYEE WAS GETTING OFF RUNNING BOARD AND HE FELL ON DEPRESSION IN STEPPING DOWN RESULTING IN SPRAIN OR STRAIN TO ANKLE .	1	0	0
EMPLOYEE WAS STANDING OR WALKING AND HE FELL ON OILY PAVEMENT RESULTING IN SPRAIN OR STRAIN TO SHOULDER .	1	10	626
EMPLOYEE WAS STANDING OR WALKING AND HE FELL ON GROUND RESULTING IN SPRAIN OR STRAIN TO WRIST .	1	2	125
EMPLOYEE WAS CARRYING STD MTL CONT AND HE FELL ON DEPRESSION RESULTING IN SPRAIN OR STRAIN TO LEG .	1	0	0
EMPLOYEE WAS STANDING OR WALKING AND HE FELL ON WASTE ON GROUND RESULTING IN BRUISE TO ELBOW .	1	5	165
EMPLOYEE WAS CARRYING STD MTL CONT AND HE FELL ON WASTE ON GROUND RESULTING IN SPRAIN OR STRAIN TO ANKLE .	1	1	49
EMPLOYEE WAS LIFTING BUNDLED SHRUBBERY AND HE FELL ON WASTE ON GROUND RESULTING IN SPRAIN OR STRAIN TO WRIST .	1	1	49
EMPLOYEE WAS STANDING OR WALKING AND HE FELL ON DEPRESSION RESULTING IN BRUISE TO KNEE .	1	4	156
TOTAL	14	123	4598

FIGURE 1-3

USER NO. 170
DETAILED DESCRIPTION OF
FALL TO A DIFFERENT LEVEL

REPORTING PERIOD: JANUARY - MARCH 1977

INSTRUCTIONS: EXAMINE THIS DATA TO DETERMINE THE CHARACTERISTICS OF YOUR ORGANIZATION'S FALL TO A DIFFERENT LEVEL. THIS PROFILE IS A FORMATTED SENTENCE CONSISTING OF ACTIVITY, ACCIDENT TYPE, NATURE OF INJURY AND PART OF BODY.

PROFILE	NO. INJ	DAYS	COSTS
EMPLOYEE WAS REFUELING VEH OR ROUTINE MAINT AND HE FELL FROM WET VEHICLE ONTO PAVEMENT RESULTING IN SPRAIN OR STRAIN TO NECK .	1	0	0
EMPLOYEE WAS STANDING OR WALKING AND HE FELL FROM ICY INCLINED GROUND RESULTING IN SPRAIN OR STRAIN TO SHOULDER .	1	11	459
EMPLOYEE WAS GETTING OFF RUNNING BOARD AND HE FELL FROM RUNNING BOARD ONTO GROUND RESULTING IN BRUISE TO LEG .	1	0	0
EMPLOYEE WAS PUSHING OR PULLING WHEELED CART AND HE FELL FROM ICY INCLINED PAVEMENT RESULTING IN BRUISE TO LEG .	1	5	215
EMPLOYEE WAS PUSHING OR PULLING WHEELED CART AND HE FELL FROM WET INCLINED GROUND RESULTING IN SPRAIN OR STRAIN TO LEG .	1	3	122
EMPLOYEE WAS CARRYING FURNITURE AND HE FELL FROM WET INCLINED GROUND RESULTING IN SPRAIN OR STRAIN TO LEG .	1	21	691
EMPLOYEE WAS PUSHING OR PULLING WHEELED CART AND HE FELL FROM INCLINED GROUND RESULTING IN SPRAIN OR STRAIN TO ANKLE .	1	4	301
EMPLOYEE WAS GETTING OFF RUNNING BOARD AND HE FELL FROM SLIPPERY RUNNING BOARD ONTO PAVEMENT RESULTING IN BRUISE TO KNEE .	1	0	0
EMPLOYEE WAS PUSHING OR PULLING WHEELED CART AND HE FELL FROM SLIPPERY INCLINED GRASS RESULTING IN SPRAIN OR STRAIN TO BACK .	1	9	322
EMPLOYEE WAS UNLOADING AND HE FELL FROM TAILGATE ONTO PAVEMENT RESULTING IN BRUISE TO BACK .	1	0	0
EMPLOYEE WAS DRIVING AND HE FELL FROM CAB OF VEH ONTO FLOOR RESULTING IN CUT/PUNCTURE TO SHOULDER .	1	19	620
EMPLOYEE WAS GETTING OFF CAB OF VEH AND HE FELL FROM RUNNING BOARD ONTO PAVEMENT RESULTING IN SPRAIN OR STRAIN TO BACK .	1	0	0
EMPLOYEE WAS GETTING OFF STEP OF VEH AND HE FELL FROM STEP OF VEH ONTO PAVEMENT RESULTING IN CUT/PUNCTURE TO BACK .	1	7	259
TOTAL	13	79	2989

FIGURE 1-4

USER NO. 170
DETAILED DESCRIPTION OF
SLIPPED ON SAME LEVEL

REPORTING PERIOD: JANUARY - MARCH 1977

INSTRUCTIONS: EXAMINE THIS DATA TO DETERMINE THE CHARACTERISTICS OF YOUR ORGANIZATION'S SLIPPED ON SAME LEVEL. THIS PROFILE IS A FORMATTED SENTENCE CONSISTING OF ACTIVITY, ACCIDENT TYPE, NATURE OF INJURY AND PART OF BODY.

PROFILE	NO. INJ	DAYS	COSTS
EMPLOYEE WAS PUSHING OR PULLING WHEELED CART AND HE SLIPPED STEPPING ON DEPRESSION RESULTING IN SPRAIN OR STRAIN TO ANKLE .	1	0	0
EMPLOYEE WAS GETTING OFF STEP OF VEH AND HE SLIPPED STEPPING ON OBJ ON GROUND IN STEPPING DOWN RESULTING IN SPRAIN OR STRAIN TO KNEE .	1	3	178
EMPLOYEE WAS GETTING OFF RUNNING BOARD AND HE SLIPPED STEPPING ON PAVEMENT IN STEPPING DOWN RESULTING IN SPRAIN OR STRAIN TO ANKLE .	1	0	0
EMPLOYEE WAS CARRYING TOTE BARREL AND HE SLIPPED STEPPING ON DEPRESSION RESULTING IN SPRAIN OR STRAIN TO ANKLE .	1	5	178
TOTAL	4	8	356

FIGURE 1-5

USER NO. 170
DETAILED DESCRIPTION OF
SLIPPED TO A DIFFERENT LEVEL

REPORTING PERIOD: JANUARY - MARCH 1977

INSTRUCTIONS: EXAMINE THIS DATA TO DETERMINE THE CHARACTERISTICS OF YOUR ORGANIZATION'S SLIPPED TO A DIFFERENT LEVEL. THIS PROFILE IS A FORMATTED SENTENCE CONSISTING OF ACTIVITY, ACCIDENT TYPE, NATURE OF INJURY AND PART OF BODY.

PROFILE	NO. INJ	DAYS	COSTS
EMPLOYEE WAS PICKING UP LOOSE WASTE AND HE SLIPPED FROM SLIPPERY CURB ONTO PAVEMENT RESULTING IN SPRAIN OR STRAIN TO ANKLE .	1	2	64
EMPLOYEE WAS GETTING OFF CAB OF VEH AND HE SLIPPED FROM CAB OF VEH IN STEPPING DOWN RESULTING IN FRACTURE TO FOOT .	1	22	770
TOTAL	2	24	834

SECTION II

IDENTIFICATION OF KEY INJURY PROBLEM AREAS

FIGURES 2-1A-2-1C:	Activities Ranked from Highest to Lowest Percent of OSHA Recordable Injuries, Workdays Lost and Direct Costs
FIGURES 2-2A-2-2C:	Accident Types Ranked from Highest to Lowest Percent of OSHA Recordable Injuries, Workdays Lost and Direct Costs
FIGURES 2-3A-2-3C:	Accident Sites Ranked from Highest to Lowest Percent of OSHA Recordable Injuries, Workdays Lost and Direct Costs
FIGURES 2-4A-2-4C:	Injury Types Ranked from Highest to Lowest Percent of OSHA Recordable Injuries, Workdays Lost and Direct Costs
FIGURE 2-5:	Parts of Body Ranked from Highest to Lowest Percent of OSHA Recordable Injuries, Workdays Lost and Direct Costs

FIGURE 2-1A

USER NO. 170
ACTIVITIES RANKED FROM HIGHEST TO LOWEST PERCENT OF OSHA RECORDABLE INJURIES
COMPARISON BY QUARTERS

OSHA RECORDABLE INJURIES

ACTIVITY	APR-JUN '76 NO.	APR-JUN '76 %	JUL-SEP '76 NO.	JUL-SEP '76 %	OCT-DEC '76 NO.	OCT-DEC '76 %	JAN-MAR '77 NO.	JAN-MAR '77 %
LIFTING CONTAINER					11	16.18	18	20.00
STANDING OR WALKING					8	11.76	14	15.56
DUMPING CONTAINER					8	11.76	8	8.89
CARRYING CONTAINER					9	13.24	6	6.67
PUSHING OR PULLING CONTAINER					6	8.82	5	5.56
LIFTING TO DUMP CONTAINER					3	4.41	5	5.56
LIFTING TO DUMP WASTE					1	1.47	5	5.56
GETTING OFF EQUIP					4	5.88	4	4.44
LIFTING WASTE					2	2.94	3	3.33
DRIVING EQUIP					1	1.47	3	3.33
PICKING UP LOOSE WASTE					0	0.00	3	3.33
RIDING ON EQUIP					3	4.41	2	2.22
CARRYING WASTE					0	0.00	1	1.11
PUSHING OR PULLING WASTE					0	0.00	1	1.11
LIFTING VEH PART					0	0.00	1	1.11
DUMPING WASTE					0	0.00	1	1.11
COMPACTING WASTE IN CONT					1	1.47	1	1.11
GETTING ON EQUIP					2	2.94	1	1.11
OPERATING CONTROLS					2	2.94	1	1.11
EMPTYING VEH					0	0.00	1	1.11
CLEARING WASTE W HANDTOOL					1	1.47	1	1.11
REPAIRING CONT W HANDTOOL					0	0.00	1	1.11
CHECKING EQUIP MALFNCTN					0	0.00	1	1.11
REFUELING VEH OR ROUTINE MAINT					0	0.00	1	1.11
DOING JANITORIAL WORK					0	0.00	1	1.11
DOING REPETITIOUS WORK					0	0.00	1	1.11
CLOSING EQUIP PT					2	2.94	0	0.00
REPAIRING EQUIP W HANDTOOL					2	2.94	0	0.00
COMPACTING WASTE IN VEH					1	1.47	0	0.00
RUNNING					1	1.47	0	0.00
TOTAL					68	100.00	90	100.00

FIGURE 2-1B

USER NO. 170
ACTIVITIES RANKED FROM HIGHEST TO LOWEST PERCENT OF OSHA DAYS LOST
COMPARISON BY QUARTERS

OSHA DAYS LOST

ACTIVITY	APR-JUN '76 NO.	APR-JUN '76 %	APR-JUN '76 AVG DYS/LOST DYS CASE	JUL-SEP '76 NO.	JUL-SEP '76 %	JUL-SEP '76 AVG DYS/LOST DYS CASE	OCT-DEC '76 NO.	OCT-DEC '76 %	OCT-DEC '76 AVG DYS/LOST DYS CASE	JAN-MAR '77 NO.	JAN-MAR '77 %	JAN-MAR '77 AVG DYS/LOST DYS CASE
DRIVING EQUIP							1	0.20	1	147	18.58	49
CLEARING WASTE W HANDTOOL							0	0.00	0	26	3.29	26
CARRYING WASTE							0	0.00	0	21	2.65	21
LIFTING TO DUMP CONTAINER							25	4.92	8	68	8.60	17
OPERATING CONTROLS							18	3.54	9	17	2.15	17
PICKING UP LOOSE WASTE							0	0.00	0	45	5.69	15
DUMPING WASTE							0	0.00	0	13	1.64	13
GETTING OFF EQUIP							22	4.33	11	44	5.56	11
LIFTING CONTAINER							59	11.61	6	172	21.74	11
STANDING OR WALKING							39	7.68	5	95	12.01	9
LIFTING TO DUMP WASTE							0	0.00	0	29	3.67	7
CARRYING CONTAINER							92	18.11	10	32	4.05	6
PUSHING OR PULLING CONTAINER							37	7.28	9	28	3.54	6
LIFTING WASTE							0	0.00	0	13	1.64	4
GETTING ON EQUIP							9	1.77	4	4	0.51	4
DUMPING CONTAINER							117	23.03	23	26	3.29	3
REPAIRING CONT W HANDTOOL							0	0.00	0	3	0.38	3
COMPACTING WASTE IN CONT							3	0.59	3	2	0.25	2
REFUELING VEH OR ROUTINE MAINT							0	0.00	0	2	0.25	2
RIDING ON EQUIP							44	8.66	22	1	0.13	1
EMPTYING VEH							0	0.00	0	1	0.13	1
DOING JANITORIAL WORK							0	0.00	0	1	0.13	1
DOING REPETITIOUS WORK							0	0.00	0	1	0.13	1
RUNNING							16	3.15	16	0	0.00	0
REPAIRING EQUIP W HANDTOOL							20	3.94	10	0	0.00	0
COMPACTING WASTE IN VEH							6	1.18	6	0	0.00	0
TOTAL							508	100.00	10	791	100.00	10

FIGURE 2-1C

USER NO. 170
ACTIVITIES RANKED FROM HIGHEST TO LOWEST PERCENT OF DIRECT COSTS
COMPARISON BY QUARTERS

DIRECT COSTS

ACTIVITY	APR-JUN '76 AMT.	APR-JUN '76 %	APR-JUN '76 AVG COSTS/ OSHA REC INJ	JUL-SEP '76 AMT.	JUL-SEP '76 %	JUL-SEP '76 AVG COSTS/ OSHA REC INJ	OCT-DEC '76 AMT.	OCT-DEC '76 %	OCT-DEC '76 AVG COSTS/ OSHA REC INJ	JAN-MAR '77 AMT.	JAN-MAR '77 %	JAN-MAR '77 AVG COSTS/ OSHA REC INJ
LIFTING CONTAINER							2,371	11.04	216	6,601	21.67	367
DRIVING EQUIP							54	0.25	54	5,211	17.11	1,737
STANDING OR WALKING							2,096	9.76	262	3,782	12.42	270
LIFTING TO DUMP CONTAINER							852	3.97	284	2,370	7.78	474
GETTING OFF EQUIP							1,105	5.14	276	1,575	5.17	394
PICKING UP LOOSE WASTE							0	0.00	0	1,569	5.15	523
DUMPING WASTE							0	0.00	0	1,443	4.74	1,443
PUSHING OR PULLING CONTAINER							1,568	7.30	261	1,218	4.00	244
CARRYING CONTAINER							3,047	14.18	339	1,141	3.75	190
DUMPING CONTAINER							5,076	23.63	635	1,074	3.53	134
LIFTING TO DUMP WASTE							20	0.09	20	945	3.10	189
CLEARING WASTE W HANDTOOL							20	0.09	20	893	2.93	893
CARRYING WASTE							0	0.00	0	691	2.27	691
OPERATING CONTROLS							732	3.41	366	632	2.07	632
LIFTING WASTE							58	0.27	29	465	1.53	155
GETTING ON EQUIP							472	2.20	236	174	0.57	174
REPAIRING CONT W HANDTOOL							0	0.00	0	122	0.40	122
REFUELING VEH OR ROUTINE MAINT							0	0.00	0	122	0.40	122
RIDING ON EQUIP							1,364	6.35	455	94	0.31	47
COMPACTING WASTE IN CONT							144	0.67	144	71	0.23	71
LIFTING VEH PART							0	0.00	0	64	0.21	64
DOING REPETITIOUS WORK							0	0.00	0	51	0.17	51
DOING JANITORIAL WORK							0	0.00	0	47	0.15	47
EMPTYING VEH							0	0.00	0	44	0.14	44
PUSHING OR PULLING WASTE							0	0.00	0	37	0.12	37
CHECKING EQUIP MALFNCTN							0	0.00	0	24	0.08	24
COMPACTING WASTE IN VEH							1,200	5.59	1,200	0	0.00	0
REPAIRING EQUIP W HANDTOOL							705	3.28	353	0	0.00	0
RUNNING							486	2.26	486	0	0.00	0
CLOSING EQUIP PT							114	0.53	57	0	0.00	0
TOTAL							21,484	100.00	316	30,460	100.00	338

FIGURE 2-2A

USER NO. 170
ACCIDENT TYPES RANKED FROM HIGHEST TO LOWEST PERCENT OF OSHA RECORDABLE INJURIES
COMPARISON BY QUARTERS

OSHA RECORDABLE INJURIES

ACCIDENT TYPE	APR-JUN '76 NO.	APR-JUN '76 %	JUL-SEP '76 NO.	JUL-SEP '76 %	OCT-DEC '76 NO.	OCT-DEC '76 %	JAN-MAR '77 NO.	JAN-MAR '77 %
OVEREXERTION INVOLVING CONT					8	11.76	25	27.78
FALL ON SAME LEVEL					6	8.82	11	12.22
FALL TO A DIFFERENT LEVEL					8	11.76	8	8.89
ANIMAL BITE					4	5.88	6	6.67
VEHICLE ACCIDENT					1	1.47	4	4.44
STRUCK BY WASTE					4	5.88	4	4.44
CAUGHT BETWEEN OBJECTS					3	4.41	4	4.44
VEH MOVEMENT INVOLVED ACCIDENT					4	5.88	3	3.33
OVEREXERTION INVOLVING WASTE					0	0.00	3	3.33
STEPPED ON SHARP WASTE					0	0.00	3	3.33
STRUCK SELF WITH CONT BEING HANDLED					2	2.94	2	2.22
WASTE PARTICLES IN EYE					0	0.00	2	2.22
SLIP TO A DIFFERENT LEVEL					1	1.47	2	2.22
SLIP ON SAME LEVEL					4	5.88	2	2.22
OVEREXERTION INVOLVING OBJ					2	2.94	2	2.22
STRUCK BY CONTAINER					0	0.00	1	1.11
STRUCK SELF WITH OBJ BEING HANDLED					0	0.00	1	1.11
STRUCK AGAINST OBJECT					0	0.00	1	1.11
STRUCK AGAINST WASTE					1	1.47	1	1.11
HURT BY HANDLING CONT					2	2.94	1	1.11
PARTICLES IN EYE					0	0.00	1	1.11
BODILY REACTION					1	1.47	1	1.11
BODILY REACTION IN CATCHING OBJ					0	0.00	1	1.11
CONTACT WITH ALLERGENIC WASTE					0	0.00	1	1.11
STRUCK BY OBJ					5	7.35	0	0.00
INSECT BITE					3	4.41	0	0.00
STRUCK SELF WITH WASTE BEING HANDLED					2	2.94	0	0.00
SLIP AND STRUCK AGAINST VEH PART					2	2.94	0	0.00

OSHA RECORDABLE INJURIES

ACCIDENT TYPE	APR-JUN '76 NO.	APR-JUN '76 %	JUL-SEP '76 NO.	JUL-SEP '76 %	OCT-DEC '76 NO.	OCT-DEC '76 %	JAN-MAR '77 NO.	JAN-MAR '77 %
STRUCK BY VEH PART					1	1.47	0	0.00
STRUCK SELF WITH VEH PT BEING HANDLED					1	1.47	0	0.00
HURT BY HANDLING WASTE					1	1.47	0	0.00
BODILY REACTION IN AVOIDING OBJ					1	1.47	0	0.00
STEPPED ON SHARP OBJ					1	1.47	0	0.00
TOTAL					68	100.00	90	100.00

FIGURE 2-2B

USER NO. 170
ACCIDENT TYPES RANKED FROM HIGHEST TO LOWEST PERCENT OF OSHA DAYS LOST
COMPARISON BY QUARTERS

OSHA DAYS LOST

ACCIDENT TYPE	APR-JUN '76 NO.	APR-JUN '76 %	APR-JUN '76 AVG DYS/LOST DYS CASE	JUL-SEP '76 NO.	JUL-SEP '76 %	JUL-SEP '76 AVG DYS/LOST DYS CASE	OCT-DEC '76 NO.	OCT-DEC '76 %	OCT-DEC '76 AVG DYS/LOST DYS CASE	JAN-MAR '77 NO.	JAN-MAR '77 %	JAN-MAR '77 AVG DYS/LOST DYS CASE
VEH MOVEMENT INVOLVED ACCIDENT							41	8.07	14	128	16.18	64
OVEREXERTION INVOLVING OBJ							3	0.59	3	39	4.93	17
STRUCK BY CONTAINER							0	0.00	0	14	1.77	14
SLIP TO A DIFFERENT LEVEL							16	3.15	16	24	3.03	12
BODILY REACTION							26	5.12	26	12	1.52	12
FALL ON SAME LEVEL							74	14.57	12	123	15.55	11
OVEREXERTION INVOLVING CONT							32	6.30	4	247	31.23	11
CAUGHT BETWEEN OBJECTS							6	1.18	6	32	4.05	11
FALL TO A DIFFERENT LEVEL							35	6.89	6	79	9.99	10
HURT BY HANDLING CONT							8	1.57	4	7	0.88	7
STRUCK SELF WITH CONT BEING HANDLED							23	4.53	11	12	1.52	6
VEHICLE ACCIDENT							12	2.36	12	23	2.91	6
OVEREXERTION INVOLVING WASTE							0	0.00	0	16	2.02	5
SLIP ON SAME LEVEL							19	3.74	6	8	1.01	4
STRUCK SELF WITH OBJ BEING HANDLED							0	0.00	0	3	0.38	3
STEPPED ON SHARP WASTE							0	0.00	0	6	0.76	3
ANIMAL BITE							16	3.15	5	5	0.63	2
STRUCK BY WASTE							28	5.51	9	6	0.76	2
STRUCK AGAINST WASTE							3	0.59	3	2	0.25	2
WASTE PARTICLES IN EYE							0	0.00	0	3	0.38	1
STRUCK AGAINST OBJECT							0	0.00	0	1	0.13	1
CONTACT WITH ALLERGENIC WASTE							0	0.00	0	1	0.13	1
SLIP AND STRUCK AGAINST VEH PART							102	20.08	51	0	0.00	0
STRUCK BY VEH PART							17	3.35	17	0	0.00	0
STRUCK SELF WITH WASTE BEING HANDLED							16	3.15	16	0	0.00	0
BODILY REACTION IN AVOIDING OBJ							6	1.18	6	0	0.00	0
STEPPED ON SHARP OBJ							5	0.98	5	0	0.00	0
STRUCK BY OBJ							18	3.54	4	0	0.00	0
INSECT BITE							2	0.39	2	0	0.00	0
TOTAL							508	100.00	10	791	100.00	10

FIGURE 2-2C

USER NO. 170
ACCIDENT TYPES RANKED FROM HIGHEST TO LOWEST PERCENT OF DIRECT COSTS
COMPARISON BY QUARTERS

DIRECT COSTS

ACCIDENT TYPE	APR-JUN '76 AMT.	APR-JUN '76 % AVG COSTS/ OSHA REC INJ	JUL-SEP '76 AMT.	JUL-SEP '76 % AVG COSTS/ OSHA REC INJ	OCT-DEC '76 AMT.	OCT-DEC '76 % AVG COSTS/ OSHA REC INJ	JAN-MAR '77 AMT.	JAN-MAR '77 % AVG COSTS/ OSHA REC INJ
OVEREXERTION INVOLVING CONT					1,191	5.54 149	9,253	30.38 370
VEH MOVEMENT INVOLVED ACCIDENT					1,317	6.13 329	4,611	15.14 1,537
FALL ON SAME LEVEL					2,870	13.36 478	4,598	15.10 418
FALL TO A DIFFERENT LEVEL					1,606	7.48 201	2,989	9.81 374
CAUGHT BETWEEN OBJECTS					1,307	6.08 436	2,217	7.28 554
OVEREXERTION INVOLVING OBJ					159	0.74 80	1,292	4.24 646
VEHICLE ACCIDENT					874	4.07 874	836	2.74 209
SLIP TO A DIFFERENT LEVEL					690	3.21 690	834	2.74 417
OVEREXERTION INVOLVING WASTE					0	0.00 0	554	1.82 185
STRUCK BY CONTAINER					0	0.00 0	409	1.34 409
STRUCK SELF WITH CONT BEING HANDLED					871	4.05 436	394	1.29 197
STRUCK BY WASTE					1,049	4.88 262	375	1.23 94
BODILY REACTION					789	3.67 789	368	1.21 368
SLIP ON SAME LEVEL					777	3.62 194	356	1.17 178
ANIMAL BITE					537	2.50 134	314	1.03 52
STEPPED ON SHARP WASTE					0	0.00 0	267	0.88 89
HURT BY HANDLING CONT					295	1.37 148	258	0.85 258
WASTE PARTICLES IN EYE					0	0.00 0	156	0.51 78
STRUCK SELF WITH OBJ BEING HANDLED					0	0.00 0	122	0.40 122
STRUCK AGAINST WASTE					144	0.67 144	71	0.23 71
BODILY REACTION IN CATCHING OBJ					0	0.00 0	64	0.21 64
CONTACT WITH ALLERGENIC WASTE					0	0.00 0	51	0.17 51
STRUCK AGAINST OBJECT					0	0.00 0	47	0.15 47
PARTICLES IN EYE					0	0.00 0	24	0.08 24
SLIP AND STRUCK AGAINST VEH PART					4,530	21.09 2,265	0	0.00 0
STRUCK BY OBJ					711	3.31 142	0	0.00 0
STRUCK BY VEH PART					566	2.63 566	0	0.00 0
STRUCK SELF WITH WASTE BEING HANDLED					506	2.36 253	0	0.00 0
INSECT BITE					256	1.19 85	0	0.00 0
BODILY REACTION IN AVOIDING OBJ					207	0.96 207	0	0.00 0
STEPPED ON SHARP OBJ					161	0.75 161	0	0.00 0
HURT BY HANDLING WASTE					39	0.18 39	0	0.00 0
STRUCK SELF WITH VEH PT BEING HANDLED					32	0.15 32	0	0.00 0
TOTAL					21,484	100.00 316	30,460	100.00 338

FIGURE 2-3A

USER NO. 170
ACCIDENT SITES RANKED FROM HIGHEST TO LOWEST
PERCENT OF OSHA RECORDABLE INJURIES

REPORTING PERIOD: JANUARY - MARCH 1977

DEFINITIONS: OSHA RECORDABLE CASES INCLUDE MEDICAL TREATMENT CASES (I.E. NON-FATAL CASES WITHOUT LOST WORKDAYS), LOST WORKDAY, PERMANENT DISABILITY AND FATAL CASES. FIRST AID INJURIES ARE NOT INCLUDE

INSTRUCTIONS: DETERMINE YOUR ORGANIZATION'S PROBLEM AREAS BY IDENTIFYING THE AREAS WITH THE HIGHEST PERCENTAGES.

ACCIDENT SITE	OSHA RECORDABLE INJURIES NO.	%
ON COLLECTION ROUTE		
IN CUSTOMER'S YD	43	47.78
IN ST AT BACK OF TRUCK	16	17.78
IN ST AT CURB	11	12.22
IN MIDSTREET	2	2.22
IN CUSTOMER'S DRIVEWAY	2	2.22
INSIDE CAB OF VEH	1	1.11
ON STEP OF VEH	1	1.11
ON RUNNING BOARD	1	1.11
IN MIDALLEY	1	1.11
SUBTOTAL	78	86.67
ENROUTE BETWEEN SITES		
INSIDE CAB	2	2.22
SUBTOTAL	2	2.22
AT LANDFILL		
AT DUMP SITE	1	1.11
SUBTOTAL	2	2.22
AT TRANSFER STATION		
NEXT TO VEHICLE	1	1.11
SUBTOTAL	1	1.11
AT HEADQUARTERS		
IN SHOP/GARAGE	3	3.33
IN YARD PARKING LOT	3	3.33
ON VEHICLE	1	1.11
SUBTOTAL	7	7.78
TOTAL	90	100.00

FIGURE 2-3B

USER NO. 170
ACCIDENT SITES RANKED FROM HIGHEST TO LOWEST
PERCENT OF OSHA DAYS LOST

REPORTING PERIOD: JANUARY - MARCH 1977

DEFINITIONS: A LOST DAYS CASE IS ONE IN WHICH THE EMPLOYEE INCURRED WORKDAYS LOST AND/OR LIGHT DUTY DAYS DUE TO THE ACCIDENT.

INSTRUCTIONS: DETERMINE YOUR ORGANIZATION'S PROBLEM AREAS BY IDENTIFYING THE AREAS WITH THE HIGHEST PERCENTAGES.

ACCIDENT SITE	OSHA DAYS LOST NO.	%	AVG DAYS LOST/ LOST DAYS CASE
ON COLLECTION ROUTE			
IN CUSTOMER'S YD	316	39.95	8.54
IN ST AT BACK OF TRUCK	119	15.04	9.15
IN ST AT CURB	111	14.03	10.09
INSIDE CAB OF VEH	29	3.67	29.00
IN CUSTOMER'S DRIVEWAY	28	3.54	28.00
ON RUNNING BOARD	12	1.52	12.00
IN MIDSTREET	11	1.39	5.50
ON STEP OF VEH	7	0.88	7.00
IN MIDALLEY	2	0.25	2.00
SUBTOTAL	635	80.28	9.34
ENROUTE BETWEEN SITES			
INSIDE CAB	100	12.64	50.00
SUBTOTAL	100	12.64	50.00
AT LANDFILL			
AT DUMP SITE	1	0.13	1.00
SUBTOTAL	2	0.25	1.00
AT TRANSFER STATION			
NEXT TO VEHICLE	22	2.78	22.00
SUBTOTAL	22	2.78	22.00
AT HEADQUARTERS			
ON VEHICLE	19	2.40	19.00
IN YARD PARKING LOT	10	1.26	5.00
IN SHOP/GARAGE	3	0.38	1.50
SUBTOTAL	32	4.05	6.40
TOTAL	791	100.00	10.14

FIGURE 2-3C

USER NO. 170
ACCIDENT SITES RANKED FROM HIGHEST TO LOWEST
PERCENT OF DIRECT COSTS

REPORTING PERIOD: JANUARY - MARCH 1977 1977

DEFINITIONS: OSHA RECORDABLE CASES INCLUDE MEDICAL TREATMENT CASES (I.E. NON-FATAL CASES WITHOUT LOST WORKDAYS), AND LOST WORKDAY, PERMANENT DISABILITY AND FATALITY CASES.
FIRST AID INJURIES ARE NOT INCLUDED.
DIRECT COSTS INCLUDE MEDICAL EXPENSES, WORKER'S COMPENSATION BENEFITS AND WAGE CONTINUATION BENEFITS (E.G., INJURY LEAVE) ONLY. INDIRECT COSTS ARE NOT INCLUDED.

INSTRUCTIONS: DETERMINE YOUR ORGANIZATION'S PROBLEM AREAS BY IDENTIFYING THE AREAS WITH THE HIGHEST PERCENTAGES.

ACCIDENT SITE	DIRECT COSTS AMT.	%	AVG COSTS/ OSHA REC INJ
ON COLLECTION ROUTE			
IN CUSTOMER'S YD	12,328	40.47	286
IN ST AT BACK OF TRUCK	5,097	16.73	318
IN ST AT CURB	3,884	12.75	353
INSIDE CAB OF VEH	1,142	3.75	1,142
IN CUSTOMER'S DRIVEWAY	878	2.88	439
IN MIDSTREET	675	2.22	337
ON RUNNING BOARD	368	1.21	368
ON STEP OF VEH	259	0.85	259
IN MIDALLEY	78	0.26	78
SUBTOTAL	24,709	81.12	317
ENROUTE BETWEEN SITES			
INSIDE CAB	3,523	11.57	1,761
SUBTOTAL	3,523	11.57	1,762
AT LANDFILL			
AT DUMP SITE	44	0.14	44
SUBTOTAL	95	0.31	47
AT TRANSFER STATION			
NEXT TO VEHICLE	770	2.53	770
SUBTOTAL	770	2.53	770
AT HEADQUARTERS			
ON VEHICLE	620	2.04	620
IN YARD PARKING LOT	550	1.81	183
IN SHOP/GARAGE	193	0.63	64
SUBTOTAL	1,363	4.47	195
TOTAL	30,460	100.00	338

FIGURE 2-4A

USER NO. 170
INJURY TYPES RANKED FROM HIGHEST TO LOWEST
PERCENT OF OSHA RECORDABLE INJURIES

REPORTING PERIOD: JANUARY - MARCH 1977

DEFINITIONS: OSHA RECORDABLE CASES INCLUDE MEDICAL TREATMENT CASES (I.E. NON-FATAL CASES WITHOUT LOST WORKDAYS), LOST WORKDAY, PERMANENT DISABILITY AND FATAL CASES. FIRST AID INJURIES ARE NOT INCLUDED.

INSTRUCTIONS: DETERMINE YOUR ORGANIZATION'S PROBLEM AREAS BY IDENTIFYING THE AREAS WITH THE HIGHEST PERCENTAGES.

	OSHA RECORDABLE INJURIES	
TYPE OF INJURY	NO.	%
SPRAIN OR STRAIN	51	56.67
CUT/PUNCTURE	20	22.22
BRUISE	13	14.44
EYE IRRITATION	3	3.33
CHEMICAL BURN	1	1.11
DERMATITIS	1	1.11
FRACTURE	1	1.11
TOTAL	90	100.00

USER NO. 170
INJURY TYPES RANKED FROM HIGHEST TO LOWEST
PERCENT OF OSHA DAYS LOST

REPORTING PERIOD: JANUARY - MARCH 1977

DEFINITIONS: A LOST DAYS CASE IS ONE IN WHICH THE EMPLOYEE INCURRED WORKDAYS LOST AND/OR LIGHT DUTY DAYS DUE TO THE ACCIDENT.

INSTRUCTIONS: DETERMINE YOUR ORGANIZATION'S PROBLEM AREAS BY IDENTIFYING THE AREAS WITH THE HIGHEST PERCENTAGES.

TYPE OF INJURY	OSHA DAYS LOST NO.	%	AVG DAYS LOST/ LOST DAYS CASE
SPRAIN OR STRAIN	516	65.23	10.75
BRUISE	164	20.73	14.91
CUT/PUNCTURE	83	10.49	5.93
FRACTURE	22	2.78	22.00
EYE IRRITATION	3	0.38	1.50
CHEMICAL BURN	2	0.25	2.00
DERMATITIS	1	0.13	1.00
TOTAL	791	100.00	10.14

USER NO. 170
INJURY TYPES RANKED FROM HIGHEST TO LOWEST
PERCENT OF DIRECT COSTS

REPORTING PERIOD: JANUARY - MARCH 1977

DEFINITIONS: OSHA RECORDABLE CASES INCLUDE MEDICAL TREATMENT CASES (I.E. NON-FATAL CASES WITHOUT LOST WORKDAYS), AND LOST WORKDAY, PERMANENT DISABILITY AND FATALITY CASES.
FIRST AID INJURIES ARE NOT INCLUDED.
DIRECT COSTS INCLUDE MEDICAL EXPENSES, WORKER'S COMPENSATION BENEFITS AND WAGE CONTINUATION BENEFITS (E.G., INJURY LEAVE) ONLY. INDIRECT COSTS ARE NOT INCLUDED.

INSTRUCTIONS: DETERMINE YOUR ORGANIZATION'S PROBLEM AREAS BY IDENTIFYING THE AREAS WITH THE HIGHEST PERCENTAGES.

TYPE OF INJURY	DIRECT COSTS AMT.	%	AVG COSTS/ OSHA REC INJ
SPRAIN OR STRAIN	19,314	63.41	379
BRUISE	5,737	18.83	441
CUT/PUNCTURE	4,226	13.87	211
FRACTURE	770	2.53	770
CHEMICAL BURN	182	0.60	182
EYE IRRITATION	180	0.59	60
DERMATITIS	51	0.17	51
TOTAL	30,460	100.00	338

FIGURE 2-5

USER NO. 170
PARTS OF BODY INJURED RANKED FROM HIGHEST TO LOWEST PERCENT OF
OSHA RECORDABLE INJURIES, WORKDAYS LOST AND DIRECT COSTS

REPORTING PERIOD: JANUARY - MARCH 1977

DEFINITIONS: OSHA RECORDABLE CASES INCLUDE MEDICAL TREATMENT CASES (I.E. NON-FATAL CASES WITHOUT LOST WORKDAYS), LOST WORKDAY, PERMANENT DISABILITY AND FATALITY CASES. FIRST AID INJURIES ARE NOT INCLUDED.
DIRECT COSTS INCLUDE MEDICAL EXPENSES, WORKER'S COMPENSATION BENEFITS AND WAGE CONTINUATION BENEFITS (E.G., INJURY LEAVE) ONLY. INDIRECT COSTS ARE NOT INCLUDED.

INSTRUCTIONS: DETERMINE YOUR ORGANIZATION'S PROBLEM AREAS BY IDENTIFYING THE AREAS WITH THE HIGHEST PERCENTAGES.

OSHA RECORDABLE INJURIES			OSHA DAYS LOST				DIRECT COSTS			
PART OF BODY	OSHA REC INJ NO.	OSHA REC INJ %	PART OF BODY	DAYS LOST NO.	DAYS LOST %	AVG/LOST DAYS CASE	PART OF BODY	DIRECT COSTS AMT.	DIRECT COSTS %	AVG COSTS/ OSHA REC I
BACK	23	25.56	BACK	324	40.96	14.09	BACK	11,881	39.01	517
LEG	9	10.00	CHEST	112	14.16	56.00	CHEST	3,848	12.63	1,924
SHOULDER	8	8.89	ANKLE	68	8.60	9.71	ANKLE	2,475	8.13	354
ANKLE	7	7.78	SHOULDER	58	7.33	7.25	SHOULDER	2,384	7.83	298
EYES	5	5.56	LEG	53	6.70	8.83	ARM	2,260	7.42	452
ARM	5	5.56	WRIST	34	4.30	8.50	LEG	1,885	6.19	209
KNEE	5	5.56	ARM	33	4.17	11.00	FOOT	1,195	3.92	239
FOOT	5	5.56	FOOT	32	4.05	6.40	WRIST	1,165	3.82	291
WRIST	4	4.44	KNEE	30	3.79	6.00	KNEE	1,092	3.59	218
HAND	4	4.44	HAND	10	1.26	2.50	FINGERS	447	1.47	112
FINGERS	4	4.44	FINGERS	10	1.26	3.33	EYES	399	1.31	80
NECK	2	2.22	TRUNK	8	1.01	8.00	NECK	384	1.26	192
ELBOW	2	2.22	NECK	7	0.88	7.00	HAND	368	1.21	92
CHEST	2	2.22	ELBOW	6	0.76	3.00	TRUNK	278	0.91	278
EARS	1	1.11	EYES	5	0.63	1.67	ELBOW	236	0.77	118
THUMB	1	1.11	EARS	1	0.13	1.00	THUMB	64	0.21	64
TRUNK	1	1.11	TOTAL	791	100.00	10.14	EARS	49	0.16	49
ABDOMEN	1	1.11					ABDOMEN	35	0.11	35
TOES	1	1.11					TOES	15	0.05	15
TOTAL	90	100.00					TOTAL	30,460	100.00	338

SECTION III

OVERALL INJURY MEASURES

FIGURE 3-1	Number of Injuries Reported by Severity-Comparison of "IRIS" Users
FIGURE 3-2	Average Injury Rates by "IRIS" Users Ranked from Highest to Lowest
FIGURE 3-3	Average Workdays Lost per Lost Workday Case by "IRIS" Users Ranked from Highest to Lowest
FIGURE 3-4	Direct Costs by "IRIS" Users Ranked from Highest to Lowest
FIGURE 3-5	Direct Costs for Lost Day Cases by "IRIS" Users Ranked from Highest to Lowest
FIGURE 3-6A-3-6B:	Comparison of Injury Rates and OSHA Days Lost for All Users (1976 & 1977)
FIGURE 3-7A-3-7B:	Comparison of Direct Costs by Reporting Period for All Users (1976 & 1977)

FIGURE 3-1

NUMBER OF INJURIES REPORTED BY TYPE OF SEVERITY
COMPARISON OF 'IRIS' USERS

REPORTING PERIOD: JANUARY - MARCH 1977

INSTRUCTIONS: THE PERCENTAGES ARE A FRACTION OF THE TOTAL CASES REPORTED. THEY TOTAL TO APPROXIMATELY 100% IF READ HORIZONTALLY. COMPARE YOUR ORGANIZATION'S PERCENTAGES WITH THE AVERAGE AND WITH OTHER IRIS USERS. HIGHER THAN AVERAGE PERCENTAGES IN THE LOWER SEVERITY GROUPS, I.E., TOWARD THE LEFT, ARE DESIRED, AS ARE LOWER THAN AVERAGE PERCENTAGES TOWARD THE RIGHT.

IRIS USER NO.	TOTAL CASES RPT'D	FIRST AID		NON-FATAL W/O LST WKDAY		LOST WKDY CASES		PERM DISAB		FATALITY	
		NO.	%	NO.	%	NO.	%	NO.	%	NO.	%
AVG	1,571	296	19	505	32	767	49	2	0.13	1	0.06
101	19	0	0	14	74	5	26	0	0.00	0	0.00
103	16	2	12	9	56	5	31	0	0.00	0	0.00
109	36	11	31	1	3	24	67	0	0.00	0	0.00
111	39	11	28	8	21	20	51	0	0.00	0	0.00
113	2	0	0	1	50	1	50	0	0.00	0	0.00
115	44	21	48	4	9	19	43	0	0.00	0	0.00
125	64	3	5	9	14	52	81	0	0.00	0	0.00
133	10	0	0	5	50	5	50	0	0.00	0	0.00
146	21	4	19	8	38	9	43	0	0.00	0	0.00
148	8	0	0	4	50	4	50	0	0.00	0	0.00
149	13	0	0	6	46	7	54	0	0.00	0	0.00
152	12	3	25	4	33	5	42	0	0.00	0	0.00
157	23	0	0	12	52	11	48	0	0.00	0	0.00
161	28	13	46	9	32	6	21	0	0.00	0	0.00
170	115	25	22	12	10	78	68	0	0.00	0	0.00
171	35	2	6	8	23	25	71	0	0.00	0	0.00
172	84	2	2	54	64	28	33	0	0.00	0	0.00
178	10	4	40	0	0	6	60	0	0.00	0	0.00
179	78	20	26	19	24	39	50	0	0.00	0	0.00
181	31	0	0	13	42	18	58	0	0.00	0	0.00
182	15	0	0	5	33	10	67	0	0.00	0	0.00
183	49	7	14	19	39	22	45	0	0.00	1	2.04
186	27	1	4	10	37	16	59	0	0.00	0	0.00
191	22	0	0	5	23	17	77	0	0.00	0	0.00
197	4	0	0	0	0	4	100	0	0.00	0	0.00
201	7	1	14	4	57	2	29	0	0.00	0	0.00
204	3	0	0	3	100	0	0	0	0.00	0	0.00
207	39	0	0	22	56	17	44	0	0.00	0	0.00
210	1	0	0	0	0	1	100	0	0.00	0	0.00
211	14	3	21	5	36	6	43	0	0.00	0	0.00
217	146	39	27	87	60	20	14	0	0.00	0	0.00
221	41	7	17	0	0	34	83	0	0.00	0	0.00
226	8	2	25	3	37	3	37	0	0.00	0	0.00
235	13	0	0	2	15	11	85	0	0.00	0	0.00
236	20	0	0	9	45	11	55	0	0.00	0	0.00

IRIS USER NO.	TOTAL CASES RPT'D	FIRST AID NO.	FIRST AID %	NON-FATAL W/O LST WKDAY NO.	NON-FATAL W/O LST WKDAY %	LOST WKDY CASES NO.	LOST WKDY CASES %	PERM DISAB NO.	PERM DISAB %	FATALITY NO.	FATALITY %
237	17	7	41	6	35	4	24	0	0.00	0	0.0
242	1	0	0	0	0	0	0	1	100.00	0	0.0
244	4	0	0	2	50	2	50	0	0.00	0	0.0
260	27	0	0	10	37	17	63	0	0.00	0	0.0
265	39	14	36	10	26	15	38	0	0.00	0	0.0
272	4	1	25	1	25	2	50	0	0.00	0	0.0
275	9	3	33	2	22	4	44	0	0.00	0	0.0
283	8	3	37	2	25	3	37	0	0.00	0	0.0
286	2	2	100	0	0	0	0	0	0.00	0	0.0
292	22	15	68	1	5	6	27	0	0.00	0	0.0
296	3	0	0	1	33	2	67	0	0.00	0	0.0
299	26	0	0	16	62	10	38	0	0.00	0	0.0
316	88	33	37	16	18	39	44	0	0.00	0	0.0
318	9	4	44	2	22	3	33	0	0.00	0	0.0
323	9	6	67	0	0	3	33	0	0.00	0	0.0
324	1	0	0	0	0	1	100	0	0.00	0	0.0
325	12	1	8	1	8	10	83	0	0.00	0	0.0
326	3	0	0	1	33	1	33	1	33.33	0	0.0
329	1	0	0	1	100	0	0	0	0.00	0	0.0
330	3	0	0	1	33	2	67	0	0.00	0	0.0
331	2	0	0	2	100	0	0	0	0.00	0	0.0
333	3	0	0	3	100	0	0	0	0.00	0	0.0
336	2	0	0	1	50	1	50	0	0.00	0	0.0
337	11	0	0	2	18	9	82	0	0.00	0	0.0
338	9	0	0	1	11	8	89	0	0.00	0	0.0
339	15	0	0	1	7	14	93	0	0.00	0	0.0
340	45	19	42	15	33	11	24	0	0.00	0	0.0
341	15	1	7	2	13	12	80	0	0.00	0	0.0
343	3	0	0	2	67	1	33	0	0.00	0	0.0
344	6	0	0	0	0	6	100	0	0.00	0	0.0
345	6	0	0	1	17	5	83	0	0.00	0	0.0
346	16	0	0	9	56	7	44	0	0.00	0	0.0
347	6	1	17	2	33	3	50	0	0.00	0	0.0
348	6	0	0	0	0	6	100	0	0.00	0	0.0
349	8	0	0	4	50	4	50	0	0.00	0	0.0
350	11	4	36	3	27	4	36	0	0.00	0	0.0
351	1	0	0	1	100	0	0	0	0.00	0	0.0
353	1	0	0	0	0	1	100	0	0.00	0	0.0
354	4	0	0	4	100	0	0	0	0.00	0	0.0
355	2	0	0	1	50	1	50	0	0.00	0	0.0
358	2	0	0	0	0	2	100	0	0.00	0	0.0
361	1	0	0	1	100	0	0	0	0.00	0	0.0
362	5	0	0	1	20	4	80	0	0.00	0	0.0
363	6	1	17	2	33	3	50	0	0.00	0	0.0

FIGURE 3-2

AVERAGE INJURY RATES BY 'IRIS' USERS
RANKED FROM HIGHEST TO LOWEST

REPORTING PERIOD: JANUARY - MARCH 1977

DEFINITIONS: AVERAGE RATIO = RATE / AVERAGE FOR THE RATE.
OSHA INCIDENCE RATE = (NUMBER OF OSHA RECORDABLE CASES / MAN-HOURS EXPOSURE) X 200,000.
ROUGHLY EQUIVALENT TO THE NUMBER OF CASES PER 100 FULL TIME EMPLOYEES PER YEAR. DOES NOT INCLUDE FIRST AID INJURIES. DOES INCLUDE MEDICAL TREATMENT, LOST TIME, PERMANENT DISABILITY AND FATALITY CASES.
SEVERITY RATE = (NUMBER OF WORKDAYS LOST / MAN-HOURS EXPOSURE) X 200,000.
ROUGHLY EQUIVALENT TO THE NUMBER OF WORKDAYS LOST PER 100 FULL TIME EMPLOYEES PER YEAR.

INSTRUCTIONS: FIND YOUR ORGANIZATION'S USER NUMBER AND COMPARE HOW IT RANKS WITH THE AVERAGE AND OTHER IRIS USERS.
A GOOD STANDING IS AN AVERAGE RATIO OF LESS THAN .50.
A POOR STANDING IS AN AVERAGE RATIO OF GREATER THAN 1.25.

	OSHA INCIDENCE RATE				INCIDENCE RATE - LWC				SEVERITY RATE		
IRIS USER NO.	MAN-HOURS EXPOSURE	NO. INJ	RATE	AVG RATIO	IRIS USER NO.	NO. INJ	RATE	AVG RATIO	IRIS USER NO.	RATE	AVG RATIO
149	20,885	13	124	3.55	221	34	92	4.35	326	3,732	14.56
346	27,179	16	118	3.35	341	12	86	4.07	349	1,209	4.72
341	27,798	14	101	2.87	344	6	69	3.25	149	1,197	4.67
349	16,539	8	97	2.76	149	7	67	3.16	221	1,117	4.36
221	73,706	34	92	2.63	325	10	67	3.14	244	1,006	3.93
103	31,394	14	89	2.54	348	6	62	2.94	341	892	3.48
211	25,038	11	88	2.50	358	2	58	2.74	316	759	2.96
207	92,287	39	85	2.41	346	7	52	2.43	260	714	2.79
354	9,649	4	83	2.36	191	17	50	2.37	348	707	2.76
260	67,802	27	80	2.27	260	17	50	2.37	324	680	2.66
350	18,286	7	77	2.18	345	5	49	2.33	133	664	2.59
299	70,424	26	74	2.10	349	4	48	2.28	325	612	2.39
325	30,052	11	73	2.09	211	6	48	2.26	275	591	2.30
343	8,295	3	72	2.06	326	2	47	2.23	344	552	2.15
326	8,467	3	71	2.02	350	4	44	2.06	350	547	2.13
344	17,395	6	69	1.97	339	14	43	2.01	115	512	2.00
191	67,732	22	65	1.85	275	4	41	1.96	235	509	1.99
183	130,755	42	64	1.83	235	11	39	1.86	237	487	1.90
348	19,233	6	62	1.78	207	17	37	1.74	207	459	1.79
275	19,302	6	62	1.77	183	23	35	1.66	179	427	1.66
236	65,025	20	62	1.75	236	11	34	1.60	191	413	1.61
345	20,294	6	59	1.68	316	39	33	1.55	211	399	1.56
161	51,590	15	58	1.66	152	5	32	1.52	111	353	1.38
358	6,892	2	58	1.65	171	25	32	1.51	113	339	1.32
152	31,079	9	58	1.65	103	5	32	1.50	339	334	1.30
244	14,697	4	54	1.55	265	15	31	1.48	330	332	1.30
265	95,564	25	52	1.49	338	8	29	1.37	265	326	1.27

OSHA INCIDENCE RATE					INCIDENCE RATE - LWC				SEVERITY RAT		
IRIS USER NO.	MAN-HOURS EXPOSURE	NO. INJ	RATE	AVG RATIO	IRIS USER NO.	NO. INJ	RATE	AVG RATIO	IRIS USER NO.	RATE	A R
351	3,879	1	52	1.47	337	9	29	1.37	161	318	1
172	319,029	82	51	1.46	299	10	28	1.34	171	293	1
333	12,301	3	49	1.39	244	2	27	1.28	125	289	1
157	95,167	23	48	1.38	170	78	27	1.27	345	286	1
235	55,802	13	47	1.33	115	19	27	1.26	152	283	1
316	237,874	55	46	1.32	111	20	26	1.22	170	274	1
339	65,865	15	46	1.30	181	18	25	1.20	146	273	1
181	142,118	31	44	1.24	197	4	25	1.18	318	272	1
171	156,054	33	42	1.21	179	39	25	1.16	362	270	1
133	47,607	10	42	1.20	343	1	24	1.14	236	265	1
237	48,509	10	41	1.17	324	1	23	1.11	AVG	256	1
217	527,934	107	41	1.16	161	6	23	1.10	338	236	0
179	317,357	58	37	1.04	157	11	23	1.09	358	232	0
111	154,737	28	36	1.03	210	1	22	1.04	181	217	0
340	145,691	26	36	1.02	125	52	22	1.03	337	216	0
337	61,981	11	35	1.01	186	16	22	1.02	346	213	0
186	147,863	26	35	1.00	AVG	770	21	1.00	172	212	0
AVG	7,266,342	1275	35	1.00	133	5	21	0.99	353	200	0
226	34,641	6	35	0.99	347	3	21	0.97	226	191	0
347	29,246	5	34	0.97	318	3	20	0.94	292	179	0
318	30,169	5	33	0.94	363	3	20	0.92	103	178	0
338	55,090	9	33	0.93	353	1	18	0.86	323	171	0
363	30,608	5	33	0.93	296	2	18	0.85	148	163	0
115	142,601	23	32	0.92	172	28	18	0.83	183	162	0
170	577,586	90	31	0.89	226	3	17	0.82	340	162	0
331	13,120	2	30	0.87	362	4	17	0.81	186	158	0
113	14,168	2	28	0.80	237	4	16	0.78	299	148	0
296	22,147	3	27	0.77	340	11	15	0.71	197	132	0
125	476,381	61	26	0.73	283	3	14	0.68	363	98	0.
201	47,534	6	25	0.72	330	2	14	0.67	157	97	0.
197	31,916	4	25	0.71	113	1	14	0.67	182	87	0.
283	41,499	5	24	0.69	109	24	13	0.63	109	78	0.
204	25,414	3	24	0.67	146	9	12	0.55	347	68	0.
324	8,525	1	23	0.67	182	10	10	0.46	178	65	0.
210	9,041	1	22	0.63	201	2	8	0.40	242	62	0.
146	154,394	17	22	0.63	336	1	8	0.37	101	60	0.
362	46,746	5	21	0.61	217	20	8	0.36	201	55	0.
330	28,321	3	21	0.60	292	6	8	0.36	217	41	0.
353	10,994	1	18	0.52	272	2	7	0.35	296	36	0.
101	216,605	19	18	0.50	148	4	7	0.32	283	34	0.
329	11,666	1	17	0.49	323	3	6	0.30	343	24	0.
336	25,594	2	16	0.45	355	1	6	0.26	336	23	0.
182	205,656	15	15	0.42	101	5	5	0.22	210	22	0.
109	356,954	25	14	0.40	178	6	4	0.20	272	11	0.
148	119,105	8	13	0.38	242	1	2	0.12	355	6	0.
272	53,416	3	11	0.32	361	0	0	0.00	361	0	0.
355	36,046	2	11	0.32	359	0	0	0.00	359	0	0.
361	18,254	1	11	0.31	354	0	0	0.00	354	0	0.
292	159,418	7	9	0.25	351	0	0	0.00	351	0	0.

OSHA INCIDENCE RATE					INCIDENCE RATE - LWC				SEVERITY RATE		
IRIS USER NO.	MAN-HOURS EXPOSURE	NO. INJ	RATE	AVG RATIO	IRIS USER NO.	NO. INJ	RATE	AVG RATIO	IRIS USER NO.	RATE	AVG RATIO
323	94,851	3	6	0.18	333	0	0	0.00	333	0	0.00
178	287,339	6	4	0.12	331	0	0	0.00	331	0	0.00
242	81,254	1	2	0.07	329	0	0	0.00	329	0	0.00
295	84,566	0	0	0.00	328	0	0	0.00	328	0	0.00
359	38,724	0	0	0.00	295	0	0	0.00	295	0	0.00
215	25,299	0	0	0.00	286	0	0	0.00	286	0	0.00
286	5,465	0	0	0.00	261	0	0	0.00	261	0	0.00
328	4,744	0	0	0.00	215	0	0	0.00	215	0	0.00
261	4,101	0	0	0.00	204	0	0	0.00	204	0	0.00

FIGURE 3-3

AVERAGE WORKDAYS LOST PER LOST WORKDAY CASE
BY 'IRIS' USERS
RANKED FROM HIGHEST TO LOWEST

REPORTING PERIOD: JANUARY - MARCH 1977

INSTRUCTIONS: FIND YOUR ORGANIZATION'S USER NUMBER AND COMPARE HOW IT RANKS WITH THE AVERAGE AND OTHER IRIS USERS.
A GOOD STANDING IS AN AVERAGE RATIO OF LESS THAN .50.
A POOR STANDING IS AN AVERAGE RATIO OF GREATER THAN 1.25.

RANK	IRIS USER NO.	NO. LOST WKDY CASES	OSHA DAYS LOST	AVG OSHA DAYS LOST	AVG RATIO (DAYS / AVG)
HIGHEST	326	3	158	52.67	4.36
2	244	2	74	37.00	3.06
3	133	5	158	31.60	2.61
4	237	4	118	29.50	2.44
5	324	1	29	29.00	2.40
6	323	3	81	27.00	2.23
7	349	4	100	25.00	2.07
8	242	1	25	25.00	2.07
9	148	4	97	24.25	2.01
10	113	1	24	24.00	1.98
11	292	6	143	23.83	1.97
12	330	2	47	23.50	1.94
13	146	9	211	23.44	1.94
14	316	39	903	23.15	1.91
15	115	19	365	19.21	1.59
16	149	7	125	17.86	1.48
17	179	39	677	17.36	1.44
18	362	4	63	15.75	1.30
19	178	6	93	15.50	1.28
20	275	4	57	14.25	1.18
21	260	17	242	14.24	1.18
22	318	3	41	13.67	1.13
23	161	6	82	13.67	1.13
24	111	20	273	13.65	1.13
25	125	52	688	13.23	1.09
26	101	5	65	13.00	1.08
27	235	11	142	12.91	1.07
28	350	4	50	12.50	1.03
29	207	17	212	12.47	1.03
30	221	34	412	12.12	1.00
	AVG	770	9,310	12.09	1.00
31	172	28	338	12.07	1.00
32	348	6	68	11.33	0.94
33	353	1	11	11.00	0.91
34	226	3	33	11.00	0.91
35	340	11	118	10.73	0.89
36	265	15	156	10.40	0.86

RANK	IRIS USER NO.	NO. LOST WKDY CASES	OSHA DAYS LOST	AVG OSHA DAYS LOST	AVG RATIO (DAYS / AVG)
37	341	12	124	10.33	0.85
38	170	78	791	10.14	0.84
39	325	10	92	9.20	0.76
40	171	25	229	9.16	0.76
41	182	10	89	8.90	0.74
42	152	5	44	8.80	0.73
43	181	18	154	8.56	0.71
44	211	6	50	8.33	0.69
45	191	17	140	8.24	0.68
46	338	8	65	8.12	0.67
47	344	6	48	8.00	0.66
48	339	14	110	7.86	0.65
49	236	11	86	7.82	0.65
50	337	9	67	7.44	0.62
51	186	16	117	7.31	0.60
52	201	2	13	6.50	0.54
53	109	24	140	5.83	0.48
54	345	5	29	5.80	0.48
55	103	5	28	5.60	0.46
56	217	20	108	5.40	0.45
57	197	4	21	5.25	0.43
58	299	10	52	5.20	0.43
59	363	3	15	5.00	0.41
60	183	22	106	4.82	0.40
61	157	11	46	4.18	0.35
62	346	7	29	4.14	0.34
63	358	2	8	4.00	0.33
64	347	3	10	3.33	0.28
65	336	1	3	3.00	0.25
66	283	3	7	2.33	0.19
67	296	2	4	2.00	0.17
68	272	2	3	1.50	0.12
69	355	1	1	1.00	0.08
70	343	1	1	1.00	0.08
71	210	1	1	1.00	0.08
LOWEST	352	2	0	0.00	0.00

FIGURE 3-4

DIRECT COSTS BY 'IRIS' USERS
RANKED FROM HIGHEST TO LOWEST

REPORTING PERIOD: JANUARY - MARCH 1977

DEFINITIONS: DIRECT COSTS INCLUDE MEDICAL EXPENSES, WORKMEN'S COMPENSATION BENEFITS, AND WAGE CONTINUATION BENEFITS (E.G. INJURY LEAVE) ONLY. INDIRECT COSTS ARE NOT INCLUDED. DIRECT COSTS PER MAN-YEAR IS THE COST PER FULL-TIME SANITATION EMPLOYEE PER YEAR BASED ON 2,000 HOURS PER YEAR.

INSTRUCTIONS: FIND YOUR ORGANIZATION'S USER NUMBER AND COMPARE HOW IT RANKS WITH THE AVERAGE AND OTHER IRIS USERS.
A GOOD STANDING IS AN AVERAGE RATIO OF LESS THAN .50.
A POOR STANDING IS AN AVERAGE RATIO OF GREATER THAN 1.25.

AVG DIRECT COST/OSHA RECORDABLE INJ				DIRECT COST PER MAN YEAR			
IRIS USER NO.	NO. OSHA RECORD INJ	AVG COST	AVG RATIO (AVG COST/AVG)	IRIS USER NO.	MAN-HRS EXPOSURE	COSTS PER M-Y	AVG RATIO (COSTS/AVG)
326	3	11,249	28.52	326	8,467	7,972	57.41
242	1	6,877	17.43	149	20,885	728	5.24
244	4	1,260	3.19	244	14,697	686	4.94
237	10	974	2.47	221	73,706	554	3.99
316	55	907	2.30	341	27,798	517	3.72
133	10	902	2.29	325	30,052	424	3.05
146	17	891	2.26	316	237,874	420	3.02
323	3	860	2.18	237	48,509	402	2.89
111	28	702	1.78	133	47,607	379	2.73
115	23	680	1.72	348	19,233	374	2.69
113	2	643	1.63	236	65,025	370	2.67
236	20	602	1.53	349	16,539	343	2.47
348	6	598	1.52	344	17,395	309	2.22
221	34	596	1.51	211	25,038	264	1.90
149	13	584	1.48	111	154,737	254	1.83
330	3	583	1.48	115	142,601	231	1.66
325	11	578	1.47	235	55,802	217	1.57
362	5	577	1.46	152	31,079	210	1.51
178	6	538	1.37	260	67,802	206	1.48
337	11	521	1.32	339	65,865	197	1.42
341	14	513	1.30	146	154,394	196	1.41
338	9	468	1.19	275	19,302	194	1.40
235	13	466	1.18	337	61,981	185	1.33
148	8	458	1.16	113	14,168	182	1.31
344	6	447	1.14	172	319,029	171	1.24
339	15	433	1.10	242	81,254	169	1.22
292	7	414	1.05	345	20,294	165	1.19
125	61	401	1.02	338	55,090	153	1.10
AVG	1,275	394	1.00	103	31,394	153	1.10
179	58	385	0.98	207	92,287	149	1.07

/G DIRECT COST/OSHA RECORDABLE INJ				DIRECT COST PER MAN YEAR			
:IS :ER :0.	NO. OSHA RECORD INJ	AVG COST	AVG RATIO (AVG COST/AVG)	IRIS USER NO.	MAN-HRS EXPOSURE	COSTS PER M-Y	AVG RATIO (COSTS/AVG)
52	9	359	0.91	161	51,590	146	1.05
:49	8	354	0.90	358	6,892	144	1.03
09	25	339	0.86	179	317,357	141	1.01
70	90	338	0.86	350	18,286	140	1.01
72	82	333	0.85	AVG	7,266,342	139	1.00
18	5	313	0.79	265	95,564	135	0.97
24	1	312	0.79	171	156,054	132	0.95
75	6	312	0.79	181	142,118	126	0.90
71	33	311	0.79	362	46,746	124	0.89
11	11	300	0.76	330	28,321	124	0.89
81	31	287	0.73	191	67,732	123	0.89
45	6	278	0.71	170	577,586	105	0.76
60	27	258	0.66	318	30,169	104	0.75
65	25	258	0.65	125	476,381	103	0.74
53	1	252	0.64	183	130,755	100	0.72
61	15	251	0.64	217	527,934	90	0.65
97	4	251	0.64	346	27,179	81	0.58
58	2	247	0.63	226	34,641	74	0.53
82	15	222	0.56	324	8,525	73	0.53
17	107	222	0.56	299	70,424	65	0.47
26	6	212	0.54	157	95,167	63	0.45
91	22	190	0.48	197	31,916	63	0.45
50	7	183	0.46	148	119,105	62	0.44
07	39	175	0.45	186	147,863	59	0.43
86	26	168	0.43	340	145,691	55	0.40
03	14	167	0.43	323	94,851	55	0.39
83	42	156	0.40	109	356,954	50	0.36
40	26	153	0.39	363	30,608	47	0.34
01	19	147	0.37	353	10,994	46	0.33
96	3	146	0.37	347	29,246	45	0.33
:63	5	143	0.36	354	9,649	43	0.31
:47	5	132	0.34	296	22,147	40	0.29
:57	23	130	0.33	343	8,295	37	0.27
:01	6	123	0.31	292	159,418	36	0.26
:04	3	116	0.30	182	205,656	32	0.23
:83	5	94	0.24	201	47,534	31	0.22
:99	26	87	0.22	204	25,414	28	0.20
:10	1	80	0.20	101	216,605	26	0.19
:46	16	68	0.17	283	41,499	23	0.16
:55	2	54	0.14	178	287,339	23	0.16
:72	3	53	0.14	210	9,041	18	0.13
354	4	51	0.13	333	12,301	13	0.09
343	3	51	0.13	351	3,879	10	0.07
329	1	40	0.10	329	11,666	7	0.05
333	3	26	0.07	331	13,120	6	0.04
361	1	20	0.05	355	36,046	6	0.04
351	1	20	0.05	272	53,416	6	0.04

AVG DIRECT COST/OSHA RECORDABLE INJ				DIRECT COST PER MAN YEAR			
IRIS USER NO.	NO. OSHA RECORD INJ	AVG COST	AVG RATIO (AVG COST/AVG)	IRIS USER NO.	MAN-HRS EXPOSURE	COSTS PER M-Y	AVG RATIO (COSTS/AVG
336	2	20	0.05	336	25,594	3	0.02
331	2	20	0.05	361	18,254	2	0.02

FIGURE 3-5

DIRECT COSTS FOR LOST DAY CASES
BY 'IRIS' USERS
RANKED FROM HIGHEST TO LOWEST

REPORTING PERIOD: JANUARY - MARCH 1977

DEFINITIONS: DIRECT COSTS INCLUDE MEDICAL EXPENSES, WORKMEN'S COMPENSATION BENEFITS, AND WAGE CONTINUATION BENEFITS (E.G. INJURY LEAVE) ONLY. INDIRECT COSTS ARE NOT INCLUDED.

INSTRUCTIONS: FIND YOUR ORGANIZATION'S USER NUMBER AND COMPARE HOW IT RANKS WITH THE AVERAGE AND OTHER IRIS USERS.

IRIS USER NO.	NO. LOST DAY CASES	TOTAL COST	AVG COST/ LOST DAY CASE
326	3	33,749	11,250
242	1	6,877	6,877
244	2	4,957	2,479
237	4	9,218	2,305
133	5	8,922	1,784
146	9	14,757	1,640
316	39	49,553	1,271
113	1	1,235	1,235
149	7	7,484	1,069
236	11	11,573	1,052
111	20	19,356	968
148	4	3,554	889
172	28	24,316	868
330	2	1,724	862
323	3	2,581	860
115	19	15,369	809
362	4	2,868	717
349	4	2,705	676
337	9	5,700	633
325	10	6,328	633
AVG	770	468,827	609
348	6	3,592	599
152	5	2,986	597
221	34	20,291	597
161	6	3,545	591
341	12	6,609	551
235	11	6,012	547
179	39	21,232	544
178	6	3,233	539
338	8	4,193	524
211	6	3,095	516
318	3	1,509	503
292	6	2,848	475
181	18	8,526	474
339	14	6,475	463
125	52	23,898	460
344	6	2,687	448

IRIS USER NO.	NO. LOST DAY CASES	TOTAL COST	AVG COST/ LOST DAY CASE
275	4	1,779	445
103	5	2,099	420
101	5	2,040	408
265	15	6,081	405
171	25	10,000	400
226	3	1,188	396
260	17	6,617	389
170	78	30,128	386
207	17	6,293	370
217	20	7,326	366
109	24	8,457	352
345	5	1,650	330
340	11	3,576	325
182	10	3,237	324
324	1	312	312
350	4	1,144	286
183	22	5,650	257
186	16	4,087	255
353	1	252	252
197	4	1,005	251
358	2	495	248
191	17	4,114	242
201	2	463	232
157	11	2,443	222
296	2	436	218
363	3	646	215
347	3	592	197
299	10	1,625	163
346	7	850	121
283	3	323	108
210	1	80	80
343	1	72	72
272	2	140	70
355	1	50	50
336	1	20	20
364	0	0	0

FIGURE 3-6A

COMPARISON OF INJURY RATES AND OSHA DAYS LOST FOR ALL USERS

	OSHA INCIDENCE RATE				SEVERITY RATE				AVERAGE OSHA DAYS LOST			
USER	QTR 1	QTR 2	QTR 3	QTR 4	QTR 1	QTR 2	QTR 3	QTR 4	QTR 1	QTR 2	QTR 3	QTR 4
101	12	34	45	20	48	394	102	121	6.50	27.00	8.33	17.57
103				109				375				3.44
109	36	49	51	21	194	176	199	124	8.03	8.15	7.65	6.27
111	68	77	81	54	1112	1203	882	221	23.73	22.05	14.93	10.87
113				28				0				0.00
115				29				152				11.00
125	31	35	42	20	743	375	523	343	30.06	13.03	15.45	24.94
133				19				131				10.50
136	15	0	3		577	0	24		38.60	0.00	8.00	
140	47	55			525	680			15.37	16.56		
146	26	21	34	36	381	138	143	250	47.17	20.60	9.82	12.93
148		35	5	18		224	0	61		12.86	0.00	9.25
149				125				886				10.22
152				87				355				8.14
157				16				90				6.29
161	13	42	63	54	0	34	99	38	0.00	1.60	5.00	1.11
170				23				171				9.58
171	44	63	57	47	209	230	294	590	9.58	5.96	10.53	18.42
172	50	56	69	38	475	1087	444	362	14.56	26.81	11.23	20.85
178				18				106				11.07
179			38	30			429	314			22.60	17.55
181	44	50	67	51	369	148	264	427	11.48	4.26	6.89	13.04
182				12				22				4.60
183				38				161				6.31
186	19	24	25	23	105	279	102	108	12.25	22.00	8.22	7.36
191	57	46	94	47	188	150	232	505	4.00	5.11	4.62	15.73
197			39	32			324	592			10.00	23.25
201				8				245				61.00
204	79	136	48	30	342	84	55	273	13.00	8.00	7.00	12.00
207	79	97	73	98	582	253	628	351	10.30	5.35	13.19	8.53
210	104	0	49	148	467	0	1347	3142	9.00	0.00	27.50	29.80
211	9	68	34	63	539	281	94	211	62.00	4.71	2.75	3.86
212	79	44			759	488			9.65	11.00		

USER	OSHA INCIDENCE RATE QTR 1	QTR 2	QTR 3	QTR 4	SEVERITY RATE QTR 1	QTR 2	QTR 3	QTR 4	AVERAGE OSHA DAYS LOST QTR 1	QTR 2	QTR 3	QTR 4
215	0	0	22	0	0	0	419	0	0.00	0.00	19.00	0.00
217		44	60	43		195	154	34		11.22	12.38	4.19
221			33	78			147	1022			4.50	13.07
226				18				0				0.00
235	66	56	40	36	330	0	0	51	6.00	0.00	0.00	2.80
236	89	105	74	57	1492	671	250	51	18.53	8.86	6.00	1.78
237	45	34	47	36	105	153	94	129	3.50	6.40	3.14	4.83
242	4	0	0	5	100	0	0	18	25.00	0.00	0.00	3.50
244	135	57	42	56	247	199	184	183	2.75	3.50	6.50	6.50
260	68	54	104	117	759	519	1190	1296	19.42	16.20	17.64	14.26
261	48	0	0	48	145	0	0	429	3.00	0.00	0.00	9.00
265	34	47	65	70	249	305	407	522	8.64	7.80	7.30	10.55
272	17	15	19	40	368	11	99	150	32.00	1.50	6.50	6.83
275		182	59	93		1944	79	384		10.67	2.67	9.25
283	34	50	51	19	0	134	118	10	0.00	8.00	3.50	2.00
285	20	0			39	0			2.00	0.00		
286	0	0	0	39	0	0	0	0	0.00	0.00	0.00	0.00
292	9	11	7	5	814	20	15	7	86.00	4.33	2.75	3.00
295	26	20	20	29	97	20	102	212	4.75	2.00	15.50	13.33
296	56	76	58	55	1398	2943	221	1765	25.00	51.50	5.75	32.17
299				45				158				28.00
316		80	60	29		907	426	300		17.05	12.82	16.32
318			79	46			2458	346			31.09	7.57
323				8				54				13.00
324		79	71	46		0	236	23		0.00	3.33	1.00
325		62	47	46		196	351	771		4.75	13.00	23.60
326			0	24			0	48			0.00	2.00
328				0				0				0.00
329		106	17	50		106	102	17		2.00	6.00	1.00
330		73	71	44		245	79	850		5.00	2.50	23.40
331			0	0			0	0			0.00	0.00
333			101	99			50	1219			2.00	37.00
336				23				62				2.67

USER	OSHA INCIDENCE RATE QTR 1	QTR 2	QTR 3	QTR 4	SEVERITY RATE QTR 1	QTR 2	QTR 3	QTR 4	AVERAGE OSHA DAYS LOST QTR 1	QTR 2	QTR 3	QTR 4
337			67	38			624	262			9.29	6.92
338			48	25			376	191			7.78	7.57
339			36	36			184	202			5.12	5.67
340				29				296				28.37
341			117	58			2073	737			19.50	12.75
343			76	75			151	50			2.00	2.00
344				11				80				7.00
345				10				627				65.00
346				29				95				3.25
347				20				20				3.00
348				34				192				8.50
349				50				125				10.00
350				42				96				3.00
351				51				101				2.00
353				35				122				7.00
354				129				388				9.00
355				33				16				1.50
358				88				4230				145.00
359				57				447				12.43
361				23				0				0.00
362				4				305				72.00
363				10				0				0.00
AVG.	40	46	50	33	463	404	315	242	16.65	14.40	11.46	12.43

USER	OSHA INCIDENCE RATE QTR 1	QTR 2	QTR 3	QTR 4	SEVERITY RATE QTR 1	QTR 2	QTR 3	QTR 4	AVERAGE OSHA DAYS LOST QTR 1	QTR 2	QTR 3	QTR 4
101	18				60				13.00			
103	89				178				5.60			
109	14				78				5.83			
111	36				353				13.65			
113	28				339				24.00			
115	32				512				19.21			
125	26				289				13.23			
133	42				664				31.60			
146	22				273				23.44			
148	13				163				24.25			
149	124				1197				17.86			
152	58				283				8.80			
157	48				97				4.18			
161	58				318				13.67			
170	31				274				10.14			
171	42				293				9.16			
172	51				212				12.07			
178	4				65				15.50			
179	37				427				17.36			
181	44				217				8.56			
182	15				87				8.90			
183	64				162				4.82			
186	35				158				7.31			
191	65				413				8.24			
197	25				132				5.25			
201	25				55				6.50			
204	24				0				0.00			
207	85				459				12.47			
210	22				22				1.00			
211	88				399				8.33			
215	0				0				0.00			
217	41				41				5.40			
221	92				1118				12.12			

USER	OSHA INCIDENCE RATE QTR 1	QTR 2	QTR 3	QTR 4	SEVERITY RATE QTR 1	QTR 2	QTR 3	QTR 4	AVERAGE OSHA DAYS LOST QTR 1	QTR 2	QTR 3	QTR 4
226	35				191				11.00			
235	47				509				12.91			
236	62				265				7.82			
237	41				487				29.50			
242	2				62				25.00			
244	54				1007				37.00			
260	80				714				14.24			
261	0				0				0.00			
265	52				326				10.40			
272	11				11				1.50			
275	62				591				14.25			
283	24				34				2.33			
286	0				0				0.00			
292	9				179				23.83			
295	0				0				0.00			
296	27				36				2.00			
299	74				148				5.20			
316	46				759				23.15			
318	33				272				13.67			
323	6				171				27.00			
324	23				680				29.00			
325	73				612				9.20			
326	71				3732				52.67			
328	0				0				0.00			
329	17				0				0.00			
330	21				332				23.50			
331	30				0				0.00			
333	49				0				0.00			
336	16				23				3.00			
337	35				216				7.44			
338	33				236				8.12			
339	46				334				7.86			
340	36				162				10.73			

USER	OSHA INCIDENCE RATE QTR 1	QTR 2	QTR 3	QTR 4	SEVERITY RATE QTR 1	QTR 2	QTR 3	QTR 4	AVERAGE OSHA DAYS LOST QTR 1	QTR 2	QTR 3	QTR 4
341	101				892				10.33			
343	72				24				1.00			
344	69				552				8.00			
345	59				286				5.80			
346	118				213				4.14			
347	34				68				3.33			
348	62				707				11.33			
349	97				1209				25.00			
350	77				547				12.50			
351	52				0				0.00			
353	18				200				11.00			
354	83				0				0.00			
355	11				6				1.00			
358	58				232				4.00			
359	0				0				0.00			
361	11				0				0.00			
362	21				270				15.75			
363	33				98				5.00			
AVG.	35				256				12.09			

FIGURE 3-7A

COMPARISON OF DIRECT COSTS BY REPORTING PERIOD FOR ALL USERS

USER	TOTAL INJURY COSTS QTR 1	QTR 2	QTR 3	QTR 4	AVG. COST PER OSHA REC. INJ. QTR 1	QTR 2	QTR 3	QTR 4	AVERAGE COST PER MAN YEAR QTR 1	QTR 2	QTR 3	QTR
101	4,210	25,973	5,735	4,271	386	864	130	213	51	291	58	4
103				3,627				203				247
109	13,513	12,994	19,851	12,834	312	213	275	351	112	104	139	77
111	53,238	41,227	29,520	11,963	1,108	749	467	278	755	576	378	151
113				102				51				14
115				6,336				301				87
125	48,010	25,734	43,854	28,740	787	357	461	598	247	125	195	119
133				638				212				39
136	1,970	0	205		394	0	205		58	0	6	
140	39,842	69,843			711	688			331	382		
146	12,010	5,442	3,060	8,171	632	340	117	291	161	72	40	105
148		3,577	110	2,092		255	36	190		89	1	34
149				2,952				227				284
152				3,056				218				190
157				2,957				369				60
161	135	815	1,526	663	18	80	93	47	5	34	60	25
170				21,541				315				72
171	3,582	6,376	9,486	20,018	148	163	243	571	65	102	139	267
172	26,708	42,735	27,413	71,487	387	547	274	1,211	193	304	190	459
178				7,087				262				48
179			8,499	20,983			424	437			161	129
181	11,510	5,081	9,833	15,322	391	153	209	425	176	76	139	218
182				1,032				82				9
183				7,505				312				119
186	1,295	8,021	2,950	3,370	143	471	163	198	27	113	40	45
191	1,475	1,685	2,101	3,702	86	120	70	231	49	54	65	108
197			2,654	43,237			442	8,647			172	2,750
201				2,571				1,285				103
204	2,481	517	300	2,142	275	39	50	535	217	54	23	162
207	4,523	9,636	12,908	6,786	141	235	403	150	111	228	292	147
210	1,445	0	3,218	9,079	361	0	1,609	1,297	374	0	788	1,914
211	794	1,987	600	1,687	758	248	145	195	68	168	51	131
212	14,297	7,138			621	549			488	243		

USER	TOTAL INJURY COSTS QTR 1	QTR 2	QTR 3	QTR 4	AVG. COST PER OSHA REC. INJ. QTR 1	QTR 2	QTR 3	QTR 4	AVERAGE COST PER MAN YEAR QTR 1	QTR 2	QTR 3	QTR 4
215	0	0	4,846	0	0	0	1,615	0	0	0	356	0
217		86,968	29,978	9,707		948	211	86		418	128	37
221			1,045	14,110			253	491			85	393
226				60				20				3
235	1,185	725	240	886	197	48	21	88	130	26	8	31
236	12,768	9,550	8,223	1,442	608	329	357	80	541	344	263	45
237	604	1,813	1,583	1,925	201	259	143	218	90	86	67	85
242	6,877	0	0	278	6,877	0	0	139	274	0	0	7
244	706	904	748	962	117	226	249	240	158	128	105	135
260	2,317	5,620	8,797	17,683	110	330	258	442	75	180	269	518
261	159	0	0	960	159	0	0	960	76	0	0	457
265	2,820	8,216	14,019	9,500	214	455	519	306	74	213	339	213
272	1,861	109	1,224	1,424	620	27	244	129	107	4	46	52
275		1,437	272	1,297		239	45	144		436	26	131
283	119	1,346	1,890	173	59	147	210	43	20	75	106	[illegible]
285	61	0			61	0			12	0		
286	0	0	0	80	0	0	0	80	0	0	0	3[illegible]
292	7,327	894	483	376	3,663	127	96	94	346	13	6	[illegible]
295	911	578	1,172	5,257	177	96	195	477	46	19	38	13[illegible]
296	1,982	16,786	1,256	10,471	991	2,098	209	1,745	554	1,598	120	95[illegible]
299				2,010				125				5[illegible]
316		35,939	24,016	17,902		598	338	511		478	204	14[illegible]
318			14,061	4,218			1,278	587			1,010	27[illegible]
323				893				205				1[illegible]
324		92	491	62		30	163	31		24	115	1[illegible]
325		2,159	4,736	5,069		359	676	716		222	319	33
326			0	91			0	91			0	2.
328				0				0				[illegible]
329		153	378	194		66	338	64		81	64	32
330		1,053	480	2,822		351	53	470		257	37	205
331			0	0			0	0			0	0
333			223	2,044			55	340			56	336
336				[illegible]								

USER	TOTAL INJURY COSTS QTR 1	QTR 2	QTR 3	QTR 4	AVG. COST PER OSHA REC. INJ. QTR 1	QTR 2	QTR 3	QTR 4	AVERAGE COST PER MAN YEAR QTR 1	QTR 2	QTR 3	QTR
337			11,442	7,664			817	638			549	24
338			6,431	4,968			714	709			345	17
339			3,152	6,265			394	522			141	18
340				10,803				491				14
341			9,864	4,644			896	572			1,048	33
343			341	453			170	151			128	11
344				318				318				3
345				1,670				1,670				16
346				619				154				4
347				331				110				22
348				1,172				390				132
349				729				182				91
350				393				98				41
351				64				64				32
353				238				119				41
354				1,193				198				256
355				165				27				9
358				3,953				1,317				1,153
359				2,061				187				105
361				40				20				4
362				1,934				1,934				81
363				31				31				2
AVG.	280,735	443,123	335,214	487,615	509	485	313	405	204	223	155	135

COMPARISON OF DIRECT COSTS BY REPORTING PERIOD FOR ALL USERS

USER	TOTAL INJURY COSTS QTR 1	QTR 2	QTR 3	QTR 4	AVG. COST PER OSHA REC. INJ. QTR 1	QTR 2	QTR 3	QTR 4	AVERAGE COST PER MAN YEAR QTR 1	QTR 2	QTR 3	QTR 4
101	2,808				147				25			
103	2,399				167				152			
109	8,936				339				50			
111	19,674				702				254			
113	1,286				643				181			
115	16,438				680				230			
125	24,482				401				102			
133	9,022				902				379			
146	15,160				891				196			
148	3,669				458				61			
149	7,598				584				727			
152	3,265				359				210			
157	3,006				130				63			
161	3,770				251				146			
170	30,460				338				105			
171	10,280				311				131			
172	27,355				333				171			
178	3,233				538				22			
179	22,334				385				140			
181	8,922				287				125			
182	3,337				222				32			
183	6,558				156				100			
186	4,388				168				59			
191	4,182				190				123			
197	1,005				251				62			
201	741				123				31			
204	350				116				27			
207	6,857				175				148			
210	80				80				17			
211	3,306				300				264			
215	0				0				0			
217	23,767				222				90			
221	20,431				596				554			

USER	TOTAL INJURY COSTS QTR 1	QTR 2	QTR 3	QTR 4	AVG. COST PER OSHA REC. INJ. QTR 1	QTR 2	QTR 3	QTR 4	AVERAGE COST PER MAN YEAR QTR 1	QTR 2	QTR 3	QTR 4
226	1,276				212				73			
235	6,068				466				217			
236	12,041				602				370			
237	9,743				974				401			
242	6,877				6,877				169			
244	5,040				1,260				685			
260	6,984				258				206			
261	0				0				0			
265	6,452				258				135			
272	160				53				5			
275	1,872				312				193			
283	473				94				22			
286	0				0				0			
292	2,903				414				36			
295	0				0				0			
296	440				146				39			
299	2,275				87				64			
316	49,919				907				419			
318	1,566				313				103			
323	2,596				860				54			
324	312				312				73			
325	6,365				578				423			
326	33,749				11,249				7,971			
328	0				0				0			
329	40				40				6			
330	1,749				583				123			
331	40				20				6			
333	79				26				12			
336	40				20				3			
337	5,740				521				185			
338	4,213				468				152			
339	6,495				433				197			
340	3,996				153				54			

USER	TOTAL INJURY COSTS QTR 1	QTR 2	QTR 3	QTR 4	AVG. COST PER OSHA REC. INJ. QTR 1	QTR 2	QTR 3	QTR 4	AVERAGE COST PER MAN YEAR QTR 1	QTR 2	QTR 3	QTR 4
341	7,185				513				516			
343	154				51				37			
344	2,687				447				308			
345	1,672				278				164			
346	1,101				68				81			
347	662				132				45			
348	3,592				598				373			
349	2,833				354				342			
350	1,282				183				140			
351	20				20				10			
353	252				252				45			
354	206				51				42			
355	108				54				5			
358	495				247				143			
359	0				0				0			
361	20				20				2			
362	2,888				577				123			
363	715				143				46			
AVG.	504,474				394				138			

APPENDIX A

DETAILED DEFINITIONS

Appendix A

DEFINITIONS

Average. In reviewing your FIGURES, the data for the AVERAGE (shown as AVG on the FIGURES) summarizes the results for all users. Your organization is compared with the AVERAGE in the average ratio column. The average ratio equals your organization's rate divided by the AVERAGE rate, and can be used to determine whether your organization's rates are "good" or "poor". An average ratio of 1.25 (25% above the AVERAGE rate) is normally considered to be poor, while an average ratio of below .50 is considered good. Average ratios between .50 and 1.25 are considered average for the solid waste management industry as shown by IRIS data. However, it should be recognized that since the injury rate for the solid waste management industry is several times higher than other industries, a good or average injury rate may still be a high rate.

Direct Costs. Direct costs are normally those for which money was actually expended and include worker's compensation, medical expenses, and wage continuation benefits (e.g., injury leave). There are many indirect costs such as down time, replacement time, lost time by witnesses and supervisors, etc., which are not included in these figures. Indirect costs are estimated to be 5 times the direct costs according to the National Safety Council.

Average Direct Costs per OSHA Recordable Injury. An average direct cost per OSHA recordable injury of $500 means that on the average each OSHA recordable injury (i.e., a non-first-aid case) is costing the organization $500!

Direct Cost per Man-Year. It shows the cost per 2,000 hours or the average cost per year per employee. A direct cost per man-year of $200 would mean that on the average an organization's injuries are costing $200 per employee per year.

OSHA Recordable Injury. An injury that REQUIRED medical treatment administered by a physician or by a registered professional personnel under standing orders of a physician, or one that resulted in light duty, lost workdays, permanent disability or a fatality.

OSHA Incidence Rate. It is a measure of the frequency of injuries. The OSHA incidence rate is the number of OSHA recordable injuries per 200,000 hours of exposure. The base figure of "200,000 hours" is the standard figure used in OSHA statistics. It is roughly equivalent to 100 full-time employees working a year or 100 man-years (i.e., 100

employees working 40 hours per week for 50 weeks per year).

OSHA incidence rates can be thought of as being roughly equivalent to the number of injuries that will occur to 100 employees during a year. Therefore, an OSHA incidence rate of 37 means that the organization is having 37 injuries per year for each 100 employees or that, on the average, 1 out of every 3 employees are being injured. The national average OSHA incidence rate for all industries has been around 10 for the last several years.

OSHA Incidence Rate for Lost Workday Cases. It is exactly the same as that for all OSHA recordable injuries, except that only lost time cases are counted. That is, it shows the number of lost workday injuries per 100 man-years worked. For organizations familiar with the ANSI (American National Standards Institute) Z16.1 injury rates, they will find the OSHA incidence rate for lost workday cases very nearly equal to 1/5 the ANSI rate. Those organizations wishing to compare OSHA and ANSI rates should multiply the OSHA rate shown in column 2 of FIGURE 2-3 by five. (Note: this is only an approximation of an ANSI rate.)

Severity Rate. The severity rate is similar to the OSHA incidence rate, except that it reflects the number of OSHA days lost (i.e., workdays lost and light duty days), instead of the number of injuries, per 100 man-years worked. For example, a severity rate of 500 would mean roughly that an organization is losing 500 workdays for every 100 employees per year, or that on the average each employee is losing 5 days a year for on-the-job injuries.

APPENDIX B

OPERATIONAL CHARACTERISTICS OF ALL USERS

DESCRIPTION OF USERS BY OPERATIONAL CHARACTERISTICS

User Number	M=Municipal P=Private	Geograph. Area	No. of Employees	Point of Collection: M=Mechanical A=Alley BY=Backyard w/o intermed. can BYT=Backyard-Tub BYC=Backyard-Cart CS=Curbside	Type of Shift	Type of Service Provided			
						Coll. Crew Size(s)			Dispos
						Resid.	Comm.	Resid. & Comm.	L=Landfil I=Incinera T=Trans.
101	M	South	325	CS/A	T/F	4	4		L
103	M	Midwest	80	BY/CS/A	T	3			
109	M	Midwest	500	BY/BYC	F	4,3			
111	M	West	280	CS	T	2			L
113	P	Midwest	33	CS	T	1,2	1	2	
115	M	South	300	CS/A	T/F	3	1,2		L,I
125	M	South	650	CS	T		1	3	L,I
133	M	Northwest	86	CS/A/BY	T	2	1,2		L
136	M	South	140	M/A	F	3,1	1		L
140	M	South	844	CS	T	3			
146	M	South	295	CS/A	T	1,2,3	1,2		L,T
148	M	Northeast	267	CS	T			4	
149	M	Midwest	65	CS	T	2	2		
152	M	Midwest	63	CS	T	2			

OPERATIONAL CHARACTERISTICS CONTINUED

User Number	M=Municipal P=Private	Geograph. Area	No. of Employees	Point of Collection: M=Mechanical A=Alley BY=Backyard w/o intermed. can BYT=Backyard-Tub BYC=Backyard-Cart CS=Curbside	Type of Shift	Type of Service Provided: Coll. Crew Size(s): Resid.	Comm.	Resid. & Comm.	Disposal L=Landfill I=Incinerator T=Trans. Stn.
157	M	West	203	CS	T	2	2	2	L,T
161	M	Midwest	125	CS/A	T	3,1			L
170	M	South	1481	CS/BYC/A	T	1,2,3,4,5	2,3,4,5		T
171	M	Midwest	370	A	T/F	3			
172	M	West	700	M/CS/A	T/F	1,3,2			L
178	M	South	629	CS	T	3	2		L,I
179	M	Northeast	532	CS	T	3	3		I,T
181	M	Midwest	278	BY	T	4			L
182	M	Northeast	470	CS	T	3			L
183	M	Midwest	308	CS	T	3	2		
186	M	South	297	CS	T	3	3		L
191	M	South	177	CS/A	T/F	3	1		L
197	M	West	86	CS	T	2	2,1	2	
201	M	Northeast	130						

OPERATIONAL CHARACTERISTICS CONTINUED

User Number	M=Municipal P=Private	Geograph. Area	No. of Employees	Point of Collection: M=Mechanical A=Alley BY=Backyard w/o intermed. can BYT=Backyard-Tub BYC=Backyard-Cart CS=Curbside	Type of Shift	Type of Service Provided			
						Coll. Crew Size(s)			Dispos.
						Resid.	Comm.	Resid. & Comm.	L=Landfil. I=Incinera. T=Trans.
204	M	West	52	CS/A/M	F	1,3	1,3		L
207	M	West	205	BYC	T	3	2		
210	M	West	15	CS	T			1,2	
211	M	West	40	CS/A	T	2	2		L
212	M	West	130	CS/A	F			2	
215	M	South	60	CS/BY/BYT	T/F	3	1		
217	M	South	820	CS/A/BY	F	1,2,3			L,T
221	M	West	210	CS	T	2			
226	M	South	87	CS	T	3	1,3		
235	M	South	125	BYT/A/CS	T	3	3		L
236	M	South	103	CS	T/F	3	1		L
237	M	Midwest	90	A/BYC	T/F			3	
242	M	South	101	CS/BY/BYT/A	T/F	3	3		L,T
244	M	West	30	BYT/BYC	T	2	1,2		

OPERATIONAL CHARACTERISTICS CONTINUED

User Number	M=Municipal P=Private	Geograph. Area	No. of Employees	Point of Collection: M=Mechanical A=Alley BY=Backyard w/o intermed. can BYT=Backyard-Tub BYC=Backyard-Cart CS=Curbside	Type of Shift	Type of Service Provided			
						Coll. Crew Size(s)			Disposal
						Resid.	Comm.	Resid. & Comm.	L=Landfill I=Incinerator T=Trans. Stn.
260	M	West	168	CS/BYT/A/M	T	1,2	2,3		L
261	M	Midwest	8	CS/A	T	3			L
265	M	West	200	CS/BYT/BYC	T	1,2	2		L,T
272	M	Northeast	127	CS	T	3	3		L,I
275	M	Northeast	40	CS	T	3			
283	M	South	72	CS/A	T/F	2	3,1		L,T
285	M	Midwest	79	A/BYT/BYC	T	3			
286	M	West	8		F				L,T
292	M	Northwest	225	CS/A/BYT/BYC	F	1,3	2		L
295	M	South	179	CS/BY	T	4	2		L
296	M	West	43	CS/A/BY	F	1	2,1		
299	M	Northeast	113	CS	T	3	3		L
316	M	Northeast	475	CS/A/BYT	F	2,3	2,3		
318	M	Northwest	48	A/CS	F	3	3	3	L

OPERATIONAL CHARACTERISTICS CONTINUED

User Number	M=Municipal P=Private	Geograph. Area	No. of Employees	Point of Collection: M=Mechanical A=Alley BY=Backyard w/o intermed. can BYT=Backyard-Tub BYC=Backyard-Cart CS=Curbside	Type of Shift	Type of Service Provided			
						Coll. Crew Size(s)			Disposa L=Landfill I=Incinera T=Trans. S
						Resid.	Comm.	Resid. & Comm.	
323	M	Northeast	171	CS	T			3	L
324	P	Midwest	17	CS/A/BYT/BYC	T			1,2	
325	M	Northwest	45	CS/A	F	2,1	1,2,3		L
326	M	South	23	CS	T	3	3		L
327	M	South	140	CS	T	3	2,3		I,L
328	M	Midwest	33	CS	T/F	2,1	2		T
329	P	West	20	CS	T	3	2,1		
330	M	South	60	A/CS	F	3	3	3	L
331	M	Midwest	35	CS/A	T	3			
332	P	West	14	-	F		2		
333	M	Northeast	43	BY	T	3			
335	P	Northeast	24	CS	T	3	1		L
336	P	Midwest	51	-	T		2,1		
337	M	Northeast	405	CS	F	3			

OPERATIONAL CHARACTERISTICS CONTINUED

User Number	M=Municipal P=Private	Geograph. Area	No. of Employees	Point of Collection: M=Mechanical A=Alley BY=Backyard w/o intermed. can BYT=Backyard-Tub BYC=Backyard-Cart CS=Curbside	Type of Shift	Type of Service Provided			
						Coll. Crew Size(s)			Disposal
						Resid.	Comm.	Resid. & Comm.	L=Landfill I=Incinerator T=Trans. Stn.
338	M	Northeast	405	CS	F	3			
339	M	Northeast	405	CS	F	3			
340	M	Midwest	318	CS	T	3			
341	M	West	35	CS/A	T	2	2,1		
342	M	Midwest	25	CS	T	1	2		L
343	M	West	17	CS	F	1			
344	M	Midwest	40	CS/A	F	2,3	1		
345	M	Midwest	38	-	F				L,I,T
346	P	Midwest	70	A/CS	T	2		2	L
347	M	Northeast	60	CS	T			4	T
348	M	West	35	CS/A	T	1,2,3			
349	P	Midwest	40	CS/BYT	T	2	1		
350	M	West	57	CS	T	2	2	2	
351	M	West	10	CS/A	T	2	1	3	

OPERATIONAL CHARACTERISTICS CONTINUED

User Number	M=Municipal P=Private	Geograph. Area	No. of Employees	Point of Collection: M=Mechanical A=Alley BY=Backyard w/o intermed. can BYT=Backyard-Tub BYC=Backyard-Cart CS=Curbside	Type of Shift	Type of Service Provided			
						Coll. Crew Size(s)			Disposal
						Resid.	Comm.	Resid. & Comm.	L=Landfill I=Incinerato T=Trans. Str
353	M	Midwest	20	CS	F			3	
354	M	Northeast	30	BYT	T	3			
355	P	Midwest	70	CS/BY	T	2	1,2		
356	P	Northeast	21	-	F		1		
358	M	South	18	BYC/CS	T	3	2		
359	P	Midwest	71	CS	T	2	1,2		
360	P	Northwest	30	-					L,T
361	M	West	44	-	F				L,T
362	M	Northeast	76	CS	T	4,3			
363	M	South	75	CS/A/BY	T	1,4	1		

EXHIBIT 11

IRIS NEWSFLASH

VOL. 1
No. 1
JANUARY 1977

Two very serious accidents occurred recently which highlight two danger areas: riding on the step while the truck is backing, and unlatching a compactor or tailgate at the landfill. These accidents are described so that users are made aware of how serious mistakes can be and to be on the lookout in preventing these accidents at your organization.

1. RIDING STEP WHILE TRUCK IS BACKING

Several IRIS users have a safety rule prohibiting this and others have discussed this. This accident occurred in a city which has this rule.

According to the accident report, the accident took place in a dead-end "T" street in which the driver was backing up to collect. His two helpers were riding on the rear step. One helper was standing on the right rear side step and the other was standing next to him, holding onto the overhead hand rail. The helper on the right decided to operate the packing mechanism to compact the Chirstmas tree that was in the hopper. He warned his co-worker standing next to him that he was going to complete the packing cycle but his co-worker had to move to avoid the hopper sill which raised up nine inches when compacting and to avoid the branches swinging around. The weather conditions were rain and cold, and his gloves were soaked. The employee lost his hand grip and foothold and fell under the wheels of the backing vehicle. The vehicle was full, weighing close to ten tons. The left rear wheel traveled over his knee to his abdomen. The employee subsequently lost his leg. He came close to losing his life, and the driver is still having problems adjusting to the shock caused by the accident.

By observing the following safe work rules, this accident could have been prevented:

- Do not ride on the back of the step while the vehicle is backing.
- Both employees should be visible to the driver in his side mirrors at all times to direct him as he backs.
- Do not operate the packing mechanism while riding on the step.

2. UNLATCHING A COMPACTOR OR TAILGATE

This was mentioned as a frequent accident type in the first issue of Accident Trends. This injury occurred to a commercial collection worker and involved a roll-off truck. According to the accident report, the employee apparently was at the landfill opening up the rear door of the 32 cubic yard compactor bin. The door was hinged on the right. The container was picked up from a department store that tended to overfill the container. There were no witnesses, and the injured employee was discovered near the truck. The compactor door was slightly ajar. According to the investigation findings, it is believed that what happened is probably as follows: He pushed up on the handle to release the rear door. The handle is located three feet from the rear on the left side. Thinking that the door was opened, he went to the rear, and the door "popped open". The investigators believe that the overfilling of the container "hung up" the door momentarily. The employee was struck on the chin by the door knob, knocking him down. He has lost the use of all his limbs and requires a respirator. It is anticipated that his injury may cost up to $250,000.

This injury could have been prevented by being aware of the dangers of being at the back of the vehicle when emptying it:

- Do not stand where you could possibly be hit by a vehicle part that is likely to swing open under pressure. Stand to the side of it, away from the direction of the swing.

- If there is a way of releasing pressure from the compacted load, do so prior to opening the rear door, and allow enough time for full release of the pressure.

This injury might also have been prevented if more stringent container regulations were enforced against the collection customers who overfill their containers.

EXHIBIT 12

IRIS NEWSFLASH

VOL. 1
No. 2
MAY 1977

"PACKING ON THE RUN"

Two other riding on equipment accidents recently occurred which prompts IRIS to urge you to examine this activity at your organization. These injuries have serious implications that may indicate that "packing on the run" should be prohibited. Efficiency may need to be weighed against safety.

1. FALLING FROM STEP INTO HOPPER

According to the injured employee, he was riding on the extended right rear step of a rear-end loader. The vehicle was moving forward at approximately 15 mph. Instead of maintaining a secure hold on the vertical grab handle provided, he was adjusting his left glove. To do this, he had hooked his left elbow on the grab handle and was using his right hand to pull his glove down tighter on his left hand.

As the driver moved the vehicle to the curb for a pickup, the shift in motion caused the employee to pivot into the hopper. Fortunately, the hopper was not operating at the time.

The employee sustained contusions to his foot, which struck the hopper lip as he fell into the hopper, and contusions to his back. Finally, as the employee tried to get out of the hopper, he strained his back. Noticing the disappearance of his coworker, the driver left the cab and found him in the street in a great deal of pain.

By observing the following safe work rules, this accident might have been prevented.

The rider should:

- Have both hands gripped on the available handholds.
- Have both feet placed firmly on the step and slightly apart.
- Keep close to the vehicle and be alert for hazards at all times.

safety sciences Division of WSA Inc., 11772 Sorrento Valley Road
San Diego, CA 92121 (714) 755-9359 & 452-1010

The driver should:

- Signal direction changes before he makes them.
- Make sure the rider on the step is visible at all times.

2. FELL FROM STEP WHILE HOPPER WAS OPERATING

In this accident, the hopper was operating when both turnbuckles broke. The employee riding on the rear step was raised ten feet into the air. He fell from the step bruising his hips. What caused the turnbuckles to break is unknown. However, these possible causes were suggested:

- Malfunction of hydraulic bypass
- Metal fatigue (aging of turnbuckles)
- "Shock loading" (loosening the turnbuckles to put more in the packer; overloading it pushes the tailgate out some)

While regular maintenance and proper use of equipment are both serious deterrents, the operating hopper was the determining factor in this case. The employee in the first accident is probably alive because the hopper was not operating. IRIS suggests that if your organization allows "packing on the run," you should take a second look at your policy. In addition, employees should be made well aware of the potential hazards of an operating hopper and the necessary caution it demands.

One user has told IRIS that they have their foremen read the injuries described in "IRIS Newsflash" to their employees.

EXHIBIT 13

IRIS NEWSFLASH

VOL. 1
No. 3
JUNE 1977

The following is a description of a near fatal accident caused by one form of dangerous waste. Could a similar accident occur in your region?

EXPLODING "BOMB"

While an employee was loading trash in a residential district, he picked up something which looked like a piece of pipe. Assuming it was of no value, he tossed it to the ground where it exploded. Both his legs were injured and subsequently had to be amputated. Costs are estimated to be at a minimum of a quarter million dollars.

After the bomb squad investigated, it was learned that the seemingly harmless object was an anti-tank missile. Apparently it had been scavenged from a military installation as a souvenir, and then carelessly discarded. As a result of this accident, a "clean up" campaign was held whereby people could turn in unauthorized weapons and ammunition with no questions asked. The response was overwhelming, perhaps in part due to the local publicity and the all too vivid example of how dangerous these souvenirs can be.

The following steps could help prevent similar occurrences at other organizations:

- Train the collectors to recognize potentially dangerous waste, and include instructions for how to deal with it. Many users instruct employees to call their supervisor if they recognize a bomb or explosive, and then to wait at the scene until a qualified person arrives to cope with the problem.

- Customers should be informed about the dangers of throwing away explosives. A clean up campaign where people can turn in unauthorized weapons and ammunition with impunity is a good idea not only to eliminate quantities of dangerous materials, but also to alert people to their hazards.

safety sciences Division of WSA Inc., 11772 Sorrento Valley Road San Diego, CA 92121 (714) 755-9359 & 452-1010

EXHIBIT 14

IRIS NEWSFLASH

VOL. 1
No. 4
SEPTEMBER 1977

CATCHING OBJECTS FALLING FROM OPERATING PACKER

ain, IRIS must warn its users of the dangers of putting hands near an operating pper; another employee lost his finger this way. The employee was standing by e hopper as his coworker loaded a piece of wood. The wood began falling out as was being packed. In order to avoid being hit by the wood, he tried to catch . However, the packer blade depressed the wood, catching his fingers between e wood and the edge of the hopper.

stressed repeatedly, employees should:

1. Stand clear of operating packer.
2. Do not attempt to catch falling waste.
3. Do not attempt to push back falling waste.
4. Lay boards crosswise in the hopper so they do not stick out or swing about when compacted.

ACCIDENTALLY OPERATING PACKER WRONG

o employees got their hands caught by the packer blade when they accidentally perated the packing mechanism wrong. One employee was pulling on a plastic bag hat was stuck in the hopper with his left hand and accidentally pushed the wrong utton with his right. The packer blade caught his left arm and hand, cutting and ruising it. His injury resulted in 17 days lost.

he second case occurred in the truck parking lot. The employee was removing the rew's tubs from the hopper before leaving for the route. The packer blade was up our inches, and he was attempting to raise it further. However, he had his left and resting on the edge of the hopper as he turned the lever the wrong way. The

safety sciences Division of WSA Inc., 11772 Sorrento Valley Road
San Diego, CA 92121 (714) 755-9359 & 452-1010

packer blade came down instead of up and amputated his first two fingers. He was off for 33 days, and his injury has cost $2,200 so far in direct costs (e.g. medical expenses, leave benefits).

In addition to retraining the employees on how to safely operate the packing mechanisms (e.g. operate with the left hand), several equipment modifications are applicable:

1. Two-handed controls so employees will not have a free hand to reach into hopper.

2. Recessed start button where it cannot be accidentally pushed (applicable to first accident).

HAZARDOUS WASTES

The following is an excerpt of a near-fatal accident printed in Solid Waste Notes, (Volume 11, June 1977) by the Virginia State Department of Health, Bureau of Solid Waste and Vector Control. Knowing users' interest in hazardous wastes, IRIS is bringing it to your attention.

> "Recently, a dump truck came into a Southside Virginia landfill with two drums on board. The landfill operator got off his bulldozer to tell the truck driver not to dump the load. He was too late. As the drums slid down the truck bed, they exploded and the operator was caught in the fireball. Other landfill personnel, all of whom had been trained in first aid, took care of the victim until the rescue squad came and took him to a local hospital where he was found to have third-degree burns over ten percent of his body.
>
> The man is probably alive today because the landfill superintendent insists that his people wear safety shoes, hard hats, a face mask, and safety goggles. The mask and goggles no doubt prevented serious face burns, but, most important, the dust respirator probably saved the man's lungs.
>
> The company delivering the waste (which was a mixture of highly volatile solvents) had been told several years ago not to bring the material to the landfill. The company had complied until this load. Rumor has it that someone in the plant put the drums on the wrong loading dock."

EXHIBIT 15

IRIS NEWS

VOL. I
No. 1
APRIL 1977

In response to the requests of many users, the first "IRIS News" will discuss equipment modifications. More and more users are examining their equipment in regard to employee safety and comfort. Equipment modification is one method through which improvement in these areas may be accomplished. In this "IRIS News" the advantages and disadvantages of selected modifications will be discussed. Upcoming "IRIS News" will deal with topics such as container regulations and worker's compensation rules. If there are any particular topics you would like to see addressed, please let IRIS know.

I. HEIL REAR-END LOADER

The following illustration shows two additions to the back of a Heil rear-end loader to improve riding comfort. This user has added: (1) a horizontal grab handle, and (2) a rear step that protrudes approximately 7 inches from the back of the vehicle and extends the full width of the vehicle. Factors to consider in implementing these modifications include:

1. Slip resistance of step.

2. Slip resistance of grab handle.

3. Comfort of height of step. (ANSI-Z245.1 recommends 22 inches above the road surface.)

4. Comfort of height of handle.

5. Strength of step. (ANSI-Z245.1 recommends that it can "carry a uniformly distributed load of not less than 1,000 pounds.")

safety sciences Division of WSA Inc., 11772 Sorrento Valley Road San Diego, CA 92121 (714) 755-9359 & 452-1010

6. Strength of grab handle. (ANSI recommends that it be "capable of withstanding a pull of 500 pounds." The user whose truck is pictured did report problems with the horizontal handle bending outwards over time.)

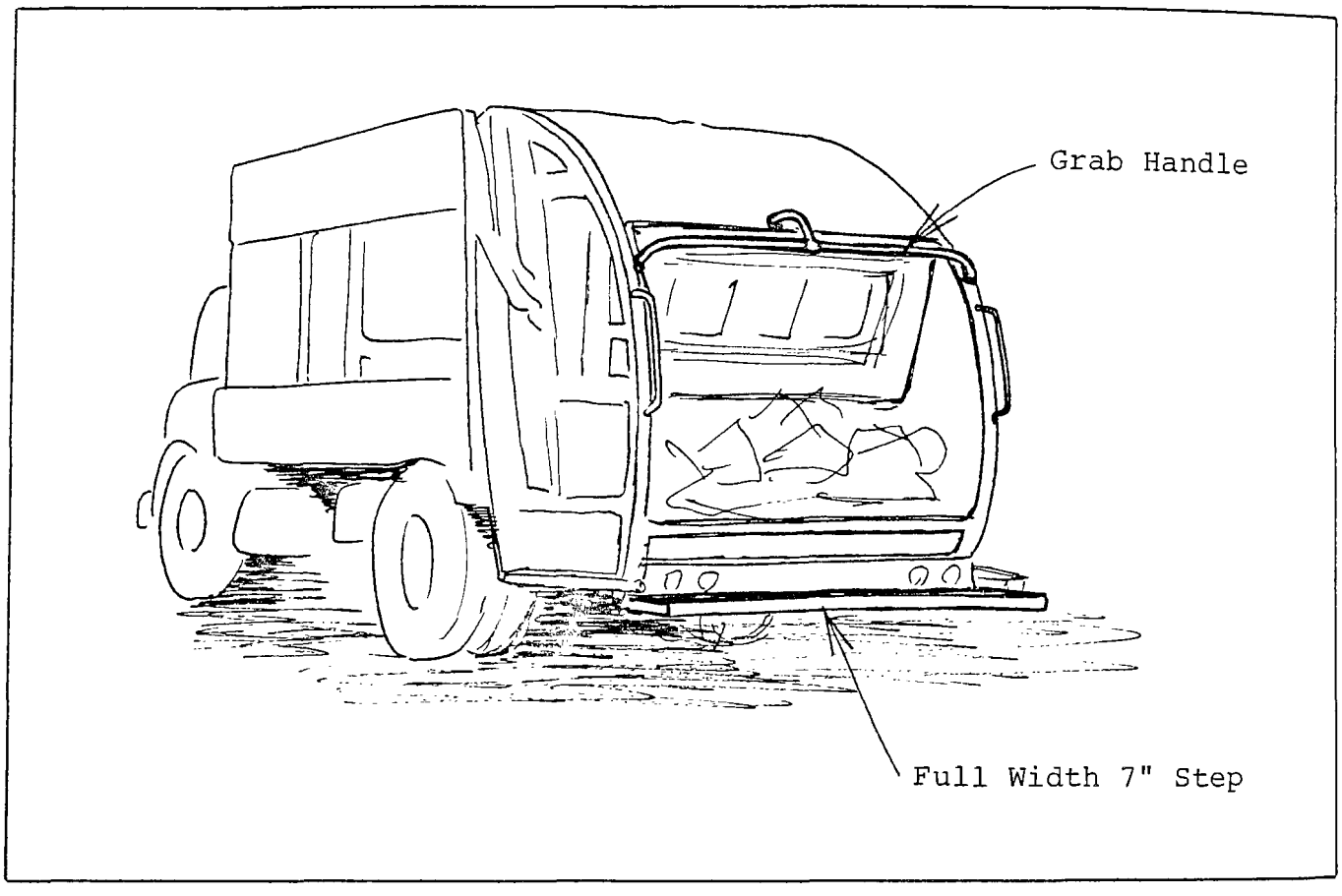

II. MAXON SHU-PAK SIDE LOADER WITH A MACK CHASSIS

The following illustration points out several safety features that were added by one user to a Maxon Shu-Pak side loader with a Mack chassis:

1. Cut-out on left cab door. The right-hand, rather than the left-hand, drive is used on this one-man collection route while the employee collects. Therefore, visibility was poor for the left side of the vehicle prior to this modification, and an accident involving a pedestrian occurred.

2. Fish-eye mirrors on both sides of the vehicle were added for increased visibility.

3. Support for climbing up to repair the auxiliary engine was necessary to prevent slips and falls to the repairmen. A step was added on the wheel fender as well as a ladder leading to the engine.

4. Slip resistant running boards. A diamond, open-mesh pattern was installed to aid in safer getting in and out of the cab.

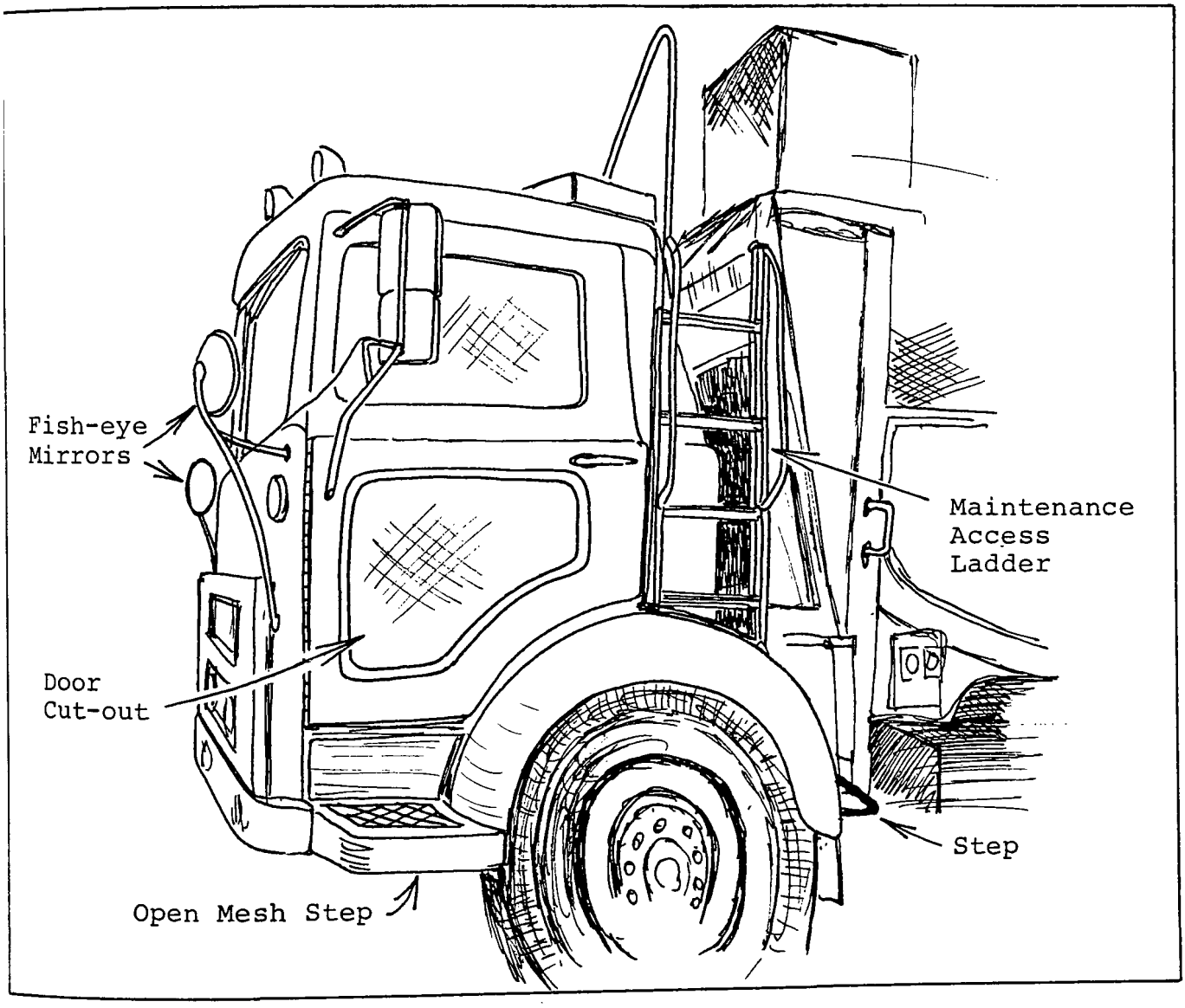

III. WHEEL BLOCKS

A number of injuries have occurred where the vehicle was parked on an incline and rolled back, striking an employee. One IRIS user has implemented the addition of wheel blocks as part of the standard equipment on each collection vehicle. They are secured over each rear wheel. Employees are trained to use them any time the driver leaves the cab.

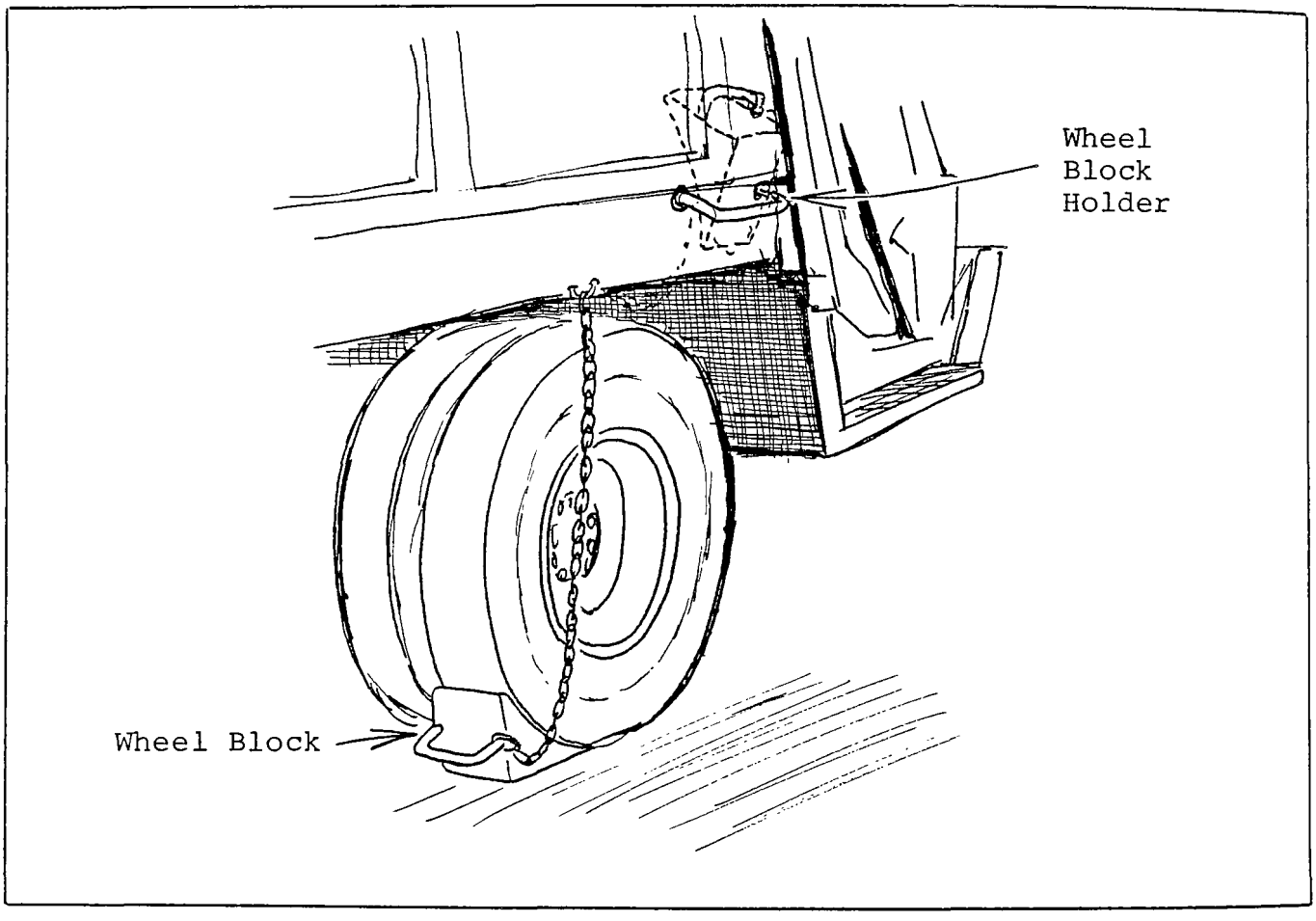

Of course, any equipment modification should be accompanied with training the the employees on its proper usage.

"IRIS News" plans to discuss additional equipment modifications in future issues. Has your organization made any equipment modifications that you would like to share with other users? Please let IRIS know. A description, pictures/slides (so IRIS can have illustrations made), and makes and models of equipment involved, are helpful pieces of information. Cities submitting ideas will be acknowledged unless otherwise requested.

A calendar, including information on meetings and activities of interest to the solid waste industry, will be a feature in upcoming issues. If there is any event you'd like to inform other "IRIS News" readers of, please let us know a month before it is scheduled to take place.

EXHIBIT 16

IRIS NEWS

VOL. I
No. 2
MAY 1977

Have you ever looked for information on safety in the solid waste industry? What do you think should go in a safety manual? Here is your opportunity to have your say. SAFETY SCIENCES, as an output of the IRIS program and through a contract with the National Science Foundation, is developing a safety manual for the solid waste industry. We would like you to tell us what you think is needed. You are also invited to share safety ideas or methods that you have found effective. The completed manual will incorporate the knowledge of all IRIS users, and serve as an encyclopedic reference on safety in solid waste collection.

Among the points that will be covered in the manual are hazards, work rules, container regulations, collection systems, training programs, protective clothing guidelines, equipment modifications and maintenance, recordkeeping ideas, and countermeasures proven and unproven. The safety manual will include sections on: hazards and the specific countermeasures (e.g., training, equipment modifications) needed to control the hazards, a management guide on safety, how to start a safety program or improve on an existing system, and an injury cost accounting guide. The following topics are ones on which we need more information, do you have material on any of the subjects? If you do, please try and get it to us by June 1, 1977.

- Descriptions of effective safety programs or countermeasures you have implemented.
- Safety success stories - case histories.
- Safety philosophy - an explanation of your safety program's purpose. Who's involved and how your goals will be met.
- Public awareness programs - how to encourage the public to cooperate with containing waste safely.
- Employee safety incentives and safety awareness programs.

safety sciences Division of WSA Inc., 11772 Sorrento Valley Road
San Diego, CA 92121 (714) 755-9359 & 452-1010

- Statistics on cost/benefit of safety programs.
- Training programs.
- Disciplinary procedures.
- Injury investigation procedures - who do you interview - the employee, supervisor, witnesses? Do you make outside visits? For which injuries are investigations carried out?
- New equipment - e.g., satellite vehicles, mechanized side loaders.
- Equipment bidding specifications.
- Equipment inspection check forms.
- Photographs - illustrating safety modifications to equipment.

Names of contributing cities may be cited in the text unless otherwise requested.

If you have any questions, call Catriona Tudor, Editor, (714) 755-9359.

A common complaint of wheeled cart users, and a potential accident factor, is the build up of dirt or ice on the wheels. The accumulated material can act as a brake and may make the cart both awkward and difficult to handle. An employee with User #109 has come up with a solution. He suggested that a metal piece be attached to the cross support of the cart frame; far enough to allow the wheel to rotate, but close enough, about 1/2", to scrape off the collected material effectively. This suggestion has been successfully implemented by the department which reported that it was a great help during the winter months.

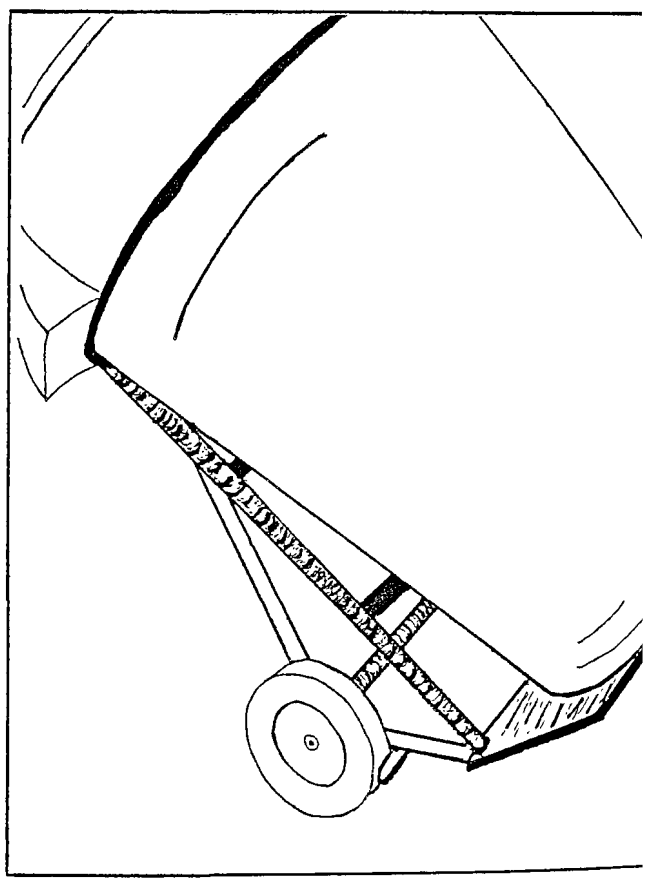

What employees' suggestions has your organization implemented? "IRIS News" would like to hear about them.

Brake failure is one of the most costly and common causes of traffic accidents. To help prevent this, one IRIS user has developed a brake testing system that allows them to identify potential problems before they become hazards.

To check the pull and skid directions of their vehicles' brakes, drivers periodically are required to go through the following test. A portable, remotely controlled street light, that flashes red and green is set up in a test area. Drivers approach at 25 mph and react to the signal, slamming on their brakes when the signal turns red. Brakes and skid directions are checked. This technique could be used to examine the reaction time of drivers. A routine check of all lights on the vehicles is also performed at this time.

CALENDAR

May 1977

May 18,19,20 & 21	National Solid Waste Management Association's International Waste Equipment & Technology Exposition Safety Seminar being conducted on the 21st. New Orleans, Louisiana.
May 18	Los Angeles Regional Forum on Solid Waste Management's 1977 Symposium. Long Beach, California.
May 18-20	National Safety Council Industrial Conference. Chicago, Illinois (O'Hare Hilton).
May 25	Western Safety Congress in Anaheim, California GRCDA is conducting a session for solid waste industry on 25th.

June 1977

June 2 & 3	University of Wisconsin Extension, Department of Engineering's "Safety in Solid Waste Collection."
June 13-16	Mid Year Meeting of Public Employee Section of National Safety Council (includes refuse collection and disposal committee meeting).

Coming up in June, IRIS with the Governmental Refuse Collection and Disposal Association (GRCDA) and the National Solid Waste Management Association (NSWMA) will be co-sponsoring seminars in the east and midwest on safety in the solid waste industry. Participants will also have an opportunity to evaluate the IRIS program in terms of both their current and future needs. Additional information will be coming to you through the mail.

EXHIBIT 17

IRIS NEWS

VOL. I
No. 3
JUNE 1977

What is the ANSI Z245.1 Standard? In the April issue of "IRIS News" equipment modifications and their relationship to the ANSI Z245.1 were discussed. This article gives background information on the standard.

The ANSI Z245.1 is a safety standard for refuse collection and compaction equipment. The American National Standards Institute (ANSI), a private foundation, working with safety experts, equipment manufacturers, solid waste collection managers, insurers, and government officials finalized the standard in October of 1975. The ANSI Z245.1 standard specifies safety requirements applicable to mobile and stationary compaction equipment employed for solid waste collection. Specific mobile equipment covered are rear loaders, side loaders, front loaders, roll-off (tilt frame) hoist vehicles, hoist-type vehicles, special collection compaction vehicles, and satellite vehicles. The standard applies to both Commercial/Industrial and Apartment/Institutional type stationary compactors. Containers are not covered by the Z245.1 standard but are the subject of a related standard, ANSI Z245.3 - 1977, Safety Requirement for the Stability of Refuse. Mobile equipment manufactured before March 1978, and stationary compactors that were manufactured before last March are not accountable to the standard.

The ANSI safety requirements apply to the operation as well as the design and construction of collection and compaction equipment. For example, the employer is charged with the responsibility for making regular inspection of equipment, keeping records of inspections, and undertaking appropriate maintenance. Employees, for their part, must report any damage or malfunction of the equipment as quickly as practicable.

Implementation of the ANSI Z245, like its development, is voluntary. However, ANSI standards are national consensus standards which serve as the basis for guidelines for government and industry. As national consensus standards they reflect the "state-of-the-art" with respect to product design and use. They are often cited in court cases. In addition, ANSI standards are frequently adopted by federal, state and local units of government as mandatory standards. In the case of this standard, the Waste Equipment Manufacturers' Institute (WEMI),

safety sciences Division of WSA Inc., 11772 Sorrento Valley Road San Diego, CA 92121 (714) 755-9359 & 452-1010

which represents more than 70 of the leading waste equipment manufacturers, has agreed to sponsor a certification program for newly manufactured equipment that meets the standard. Beginning in January, 1978, equipment models that have been certified will bear a special WEMI seal. Manufacturers are not the only ones implementing the standard. Purchasers of refuse collection and compaction equipment are including sections of the standards in their bidding specifications. Both efforts will lead to a new and better inventory of solid waste management vehicles and equipment.

Hand in hand with the ANSI Z245.1 standard which deals with solid waste equipment, is the ANSI Z245.3 standard for the stability of refuse bins. This standard, which was approved in December, 1976, directs itself primarily at bins designed to be mechanically emptied into rear or side loading refuse collection compaction vehicles. Typically, such bins are slope-sided to facilitate use with the vehicle hopper configuration, and to empty the contents more efficiently. The flaw in the design is that it is very easy for young chindren, who are playing on the containers, to tip them over onto themselves. In fact, there have been several deaths as a result of this accident.

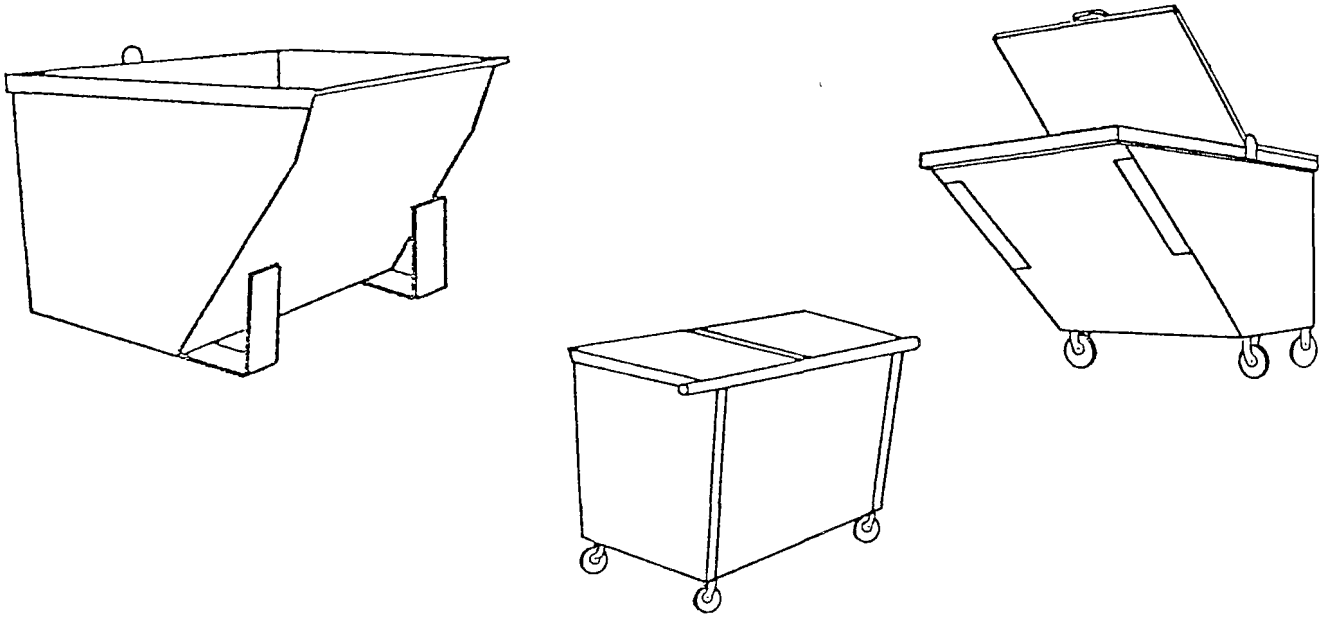

The ANSI Z245.3 standard requires that the slope-sided bins do not tip when subjected to a force of 70 pounds exerted horizontally and 191 pounds exerted vertically from the leading edge of the bin. In each case, the test is to be done with the bin empty and the wheels and covers in their most adverse position. The standard also requires that appropriate safety markings be affixed to the container.

Because of the seriousness of the hazard of these bins, the new ANSI requirements will apply not only to the manufacturer, but also to the owner, collector, or customer who uses these containers. Existing bins must be brought within the standard through a retrofit program, or they must be adequately protected from unauthorized access and accidental tipping.

The suggested deadline for this standard reflects priority given to bin locations where children are most likely to congregate. The proposed implementation schedule contained in the standard is as follows:

Location	Date
Schoolyards	September, 1977
Parks and Playgrounds	March, 1978
Apartment Developments	September, 1978
All Other Locations	March, 1979

Since all slope-sided bins manufactured after this June must comply with the standard, you should include the ANSI Requirements in your bidding specifications. Copies of both standards may be obtained by writing to:

American National Standards Institute, Inc.
Sales Department
1430 Broadway
New York, New York 10018

The cost for the ANSI Z245.1 is $4.50 per copy, and the Z245.3 standard costs $4.00 a copy.

One of the sections of the ANSI Z245.1 (7.1.3.3) calls for a "visual or audible warning signal, or both shall be provided in the cab to indicate when any part of the container lifting mechanism is elevated above the roof of the body when the front loader is being driven." While this section of the Z245.1 standard is scheduled to become effective in March 1978, recent accidents to IRIS users illustrate the need for such signals.

In one accident involving a raised vehicle part, the packer was still up when the truck was driven out of the incinerator area. It struck the overhead door. The driver was thrown against the steering wheel and sustained bruises to his chest. While damage to equipment was minimal in this case, in two other accidents the opposite was true. Equipment damage costs were estimated at $763.00 for labor and materials when a driver enroute to the city yard failed to realize that his top loader lid was raised. As he drove under a low overpass, the lid struck against it. A passenger experienced whiplash which caused multiple body strains. In a third and final example, a truck was totaled and equipment damages estimated at $15,000.00. Once again an overpass was involved. The truck's tailgate had not been fastened down and the collision with the overpass caused the truck to overturn. The driver suffered multiple body bruises.

Drivers of recessed bubble trucks are often unable to see the actual end of the truck. When backing up they have to estimate how much room is left. A superintendent for IRIS user 296 solved this problem by attaching an arm to the recessed tailgate. The arm extends beyond the sides of the truck and into the driver's line of vision. Originally, the arm was made of metal. But because of the chance of it hitting an object, or a worker striking it, hard rubber from mud flaps is now used. For visibility, the extension is painted red.

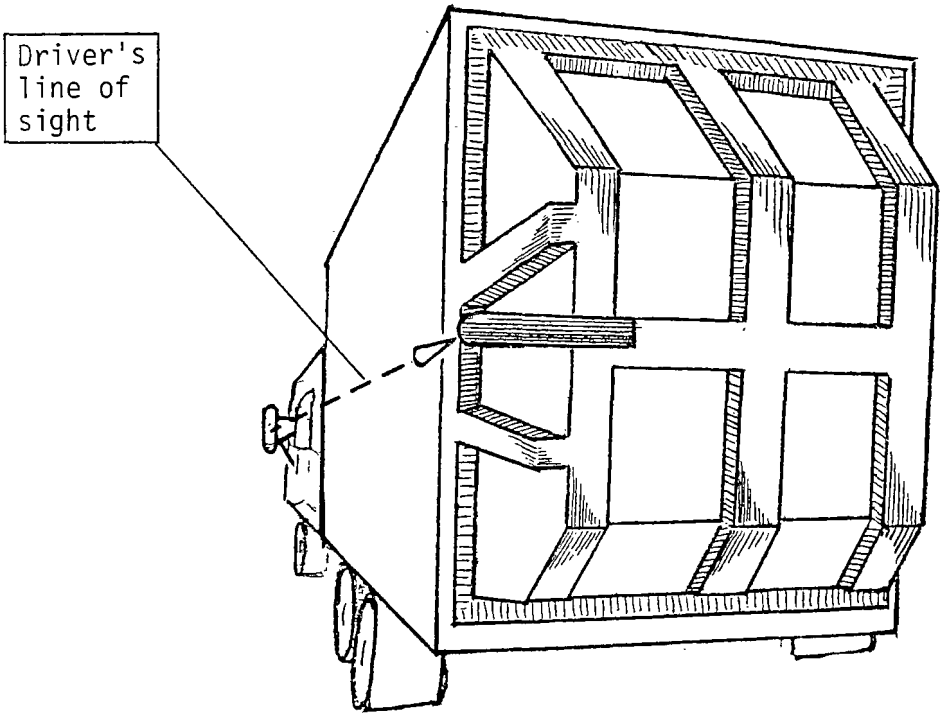

CALENDAR

June 1977

June 2 & 3	University of Wisconsin Extension, Department of Engineering's "Safety in Solid Waste Collection."
June 13-16	Mid Year Meeting of Public Section of National Safety Council (includes refuse collection and disposal committee).
June 22	Des Moines Regional IRIS Solid Waste Accident Control Workshop, Cosponsored by IRIS, Governmental Refuse Collection and Disposal Association (GRCDA), and the National Solid Waste Management Association (NSWMA), Des Moines, Iowa.
June 27	Buffalo Regional IRIS Solid Waste Accident Control Workshop. Cosponsored by IRIS, GRCDA and NSWMA. Buffalo, New York.
June 29	St. Petersburg Regional IRIS Solid Waste Accident Control Workshop. Cosponsored by IRIS, GRCDA and NSWMA. St. Petersburg, Florida.

EXHIBIT 18

IRIS NEWS

VOL. I
No. 4
JULY 1977

As you read in the last IRIS NEWS, three accident control workshops were conducted in which two safety topics were discussed. For those of you who were unable to attend the workshops, IRIS would like to share with you the handouts that were developed on the safety topics, equipment related and overexertion accidents.

In the two handouts, the percentages under the task column on the left represent the percent of OSHA recordable injuries, days lost and direct costs for that group of injuries. Therefore, 10% of the total for "driving and riding in cab" means that they are 10% of the 1,013 injuries for equipment related accidents, not all injuries that occurred in the 13 month period. The second set of percentages represent the percents for a particular task. Thus, 56% of the injuries for the hazard of "vehicle struck by another vehicle" represents 56% out of 10% of the task category, "driving and riding in cab." The percentages will not equal 100% due to the fact that some injuries do not have a pattern and cannot be easily grouped. Injuries that totaled less than 1% are not shown.

All columns to the right of the task column read across and are related to the specific hazards. The equipment related accidents handout does not address other preventative measures (e.g., employee training, protective clothing, etc.) because of time limitations in the workshops.

The ANSI Z245.1 Standard quoted was discussed in the last issue of IRIS NEWS.* The Standard does not address the chassis, only the body of the vehicle. The equipment modifications given are actual modifications in use at various agencies. "Concur" in this column means that the ANSI Z245.1 Standard quoted was an equipment modification that was agreed with but not repeated in this column. IRIS wishes to thank all the users who sent information on their equipment modifications.

*This material was reproduced with permission from American National Standard, "Safety Requirements for Refuse Collection and Compaction Equipment," ANSI Z245.1, copyright 1975 by the American National Standards Institute, copies of which may be purchased from the American National Standards Institute at 1430 Broadway, New York, New York 10018.

IRIS - Injury Reporting and Information System

safety sciences Division of WSA Inc., 11772 Sorrento Valley Road
San Diego, CA 92121 (714) 755-9359 & 452-1010

EVALUATION OF EQUIPMENT MODIFICATIONS
USING IRIS INJURY DATA*

TASK	HAZARDS	ANSI Z245.1 STANDARDS	EQUIPMENT MODIFICATIONS	PERCENT OF TASK % NO. INJ.	% DAYS LOST	% DIRECT COSTS
1. Driving & Riding in Cab	a. Vehicle struck by another vehicle	7.3.5. Lights. Turn signals and brake lights shall be placed such that they are visible from behind the truck when employees are standing on the riding step.	Concur	56%	72%	65%
Percent of Total						
No. Injuries 10%						
Days Lost 13%	b. Vehicle collided with another vehicle		Additional mirrors, cut-out windows	11%	13%	14%
Direct Costs 10%	c. Vehicle collided with object (e.g., curb)			15%	8%	10%
2. Riding on Step or Truck Bed	a. Caught between truck and object as truck was backing (riding on rear step)		Back-safe. Additional mirrors, cut-out windows	6%	5%	5%
Percent of Total						
No. Injuries 11%	b. Fell off step or struck against truck when truck went over a bump or depression	7.3.7.4 Steps shall have a depth of at least 8 inches and shall provide a minimum of 220 square inches of riding surface area.	Concur	12%	6%	5%
Days Lost 16%						
Direct Costs 13%		7.3.7.5 Grab handles shall be provided in conjunction with riding steps and be located so as to provide the employee with a safe and comfortable riding stance. Each grab handle shall be capable of withstanding a pull of at least 500 pounds.				

*IRIS Reporting period, December 1975 to December 1976, includes 3,774 OSHA recordable injuries, 1,013 of which were equipment related.
**Overlapping numbers

EVALUATION OF EQUIPMENT MODIFICATIONS
USING IRIS INJURY DATA*

TASK	HAZARDS	ANSI Z245.1 STANDARDS	EQUIPMENT MODIFICATIONS	PERCENT OF TASK % NO. INJ.	% DAYS LOST	% DIRECT COSTS
2. Riding (contd.)	c. Fell off step when truck turned corner, made sudden stop, made sudden start, or hit curb.	7.3.7.4 Steps shall have a depth of at least 8 inches and shall provide a minimum of 220 square inches of riding surface area. 7.3.7.5 Grab handles shall be provided in conjunction with riding steps and be located so as to provide the employee with a safe and comfortable riding stance Each grab handle shall be capable of withstanding a pull of at least 500 pounds.	Concur	12%	6%	5%
	d. Fell off wet/oily step or fell due to wet handhold or gloves.	7.3.7.1 The surface and edges of steps shall have a slip-resistant surface. They shall be self-cleaning or be protected against the accumulation of mud, snow and ice. 7.3.7.4 Steps shall have a depth of at least 8 inches and shall provide a minimum of 220 square inches of riding surface area. 7.3.7.5 Grab handles shall be provided in conjunction with riding steps and be located so as to provide the employee with a safe and comfortable riding stance. Each grab handle shall be capable of withstanding a pull of at least 500 pounds.	Concur Slip resistant grab handles	9%	6%	6%

*IRIS Reporting period, December 1975 to December 1976, includes 3,774 OSHA recordable injuries, 1,013 of which were equipment related.
** Overlapping numbers

EVALUATION OF EQUIPMENT MODIFICATIONS
USING IRIS INJURY DATA*

TASK	HAZARDS	ANSI Z245.1 STANDARDS	EQUIPMENT MODIFICATIONS	PERCENT OF TASK % NO. INJ.	% DAYS LOST	% DIRECT COSTS
2. Riding (contd.)	e. Caught hand or foot in packing mechanism	7.3.6 Point-of-Operation Protection. The employee shall be protected from pinch points during the packing cycle by one of the following means: (3) A movable guard that is interlocked with the packing cycle so that it is in place before the packer panel is within 6 inches of the pinch point. The movable barrier shall be designed so that it shall not be hazardous in itself.	Two-handed packer controls.	7%	19%	22%
	f. Vehicle struck by other vehicle	7.3.5 Lights. Turn signals and brake lights shall be placed such that they are visible from behind the truck when employees are standing on the riding step.	Concur	14%	8%	11%
	g. Vehicle collided with other other vehicle		Additional mirrors, cut-out windows.	3%	2%	2%
	h. Vehicle collided with object			3%	2%	1%
	i. Slipped and struck against vehicle part	7.3.7.1 The surface and edges of steps shall have a slip-resistant surface. They shall be self-cleaning or be protected against the accumulation of mud, snow and ice.	Concur	4%	5%	2%
	j. Step collapsed	7.3.7.2 Steps shall be designed to carry a uniformly distributed load of not less than 1000 pounds.	Concur	2%	1%	<1%

*IRIS Reporting period, December 1975 to December 1976, includes 3,774 OSHA recordable injuries, 1,013 of which were equipment related.
**Overlapping numbers

EVALUATION OF EQUIPMENT MODIFICATIONS
USING IRIS INJURY DATA*

TASK	HAZARDS	ANSI Z245.1 STANDARDS	EQUIPMENT MODIFICATIONS	PERCENT OF TASK % NO. INJ.	% DAYS LOST	% DIRECT COSTS
3. Mounting step	a. Slipped or fell off step		Long vertical grab handles	4%	51%	53%
% of Total	b. Step was wet, icy or oily	7.3.7.1 The surface and edges of steps shall have a slip-resistant surface. They shall be self-cleaning or be protected against the accumulation of mud, snow, and ice.	Concur	3%	17%	17%**
No. Injuries 4%			Long vertical grab handles			
Days Lost 5%						
Direct Costs 3%	c. Struck against truck when mounting		Long vertical grab handles	26%	10%	7%
	d. Step collapsed	7.3.7.2 Steps shall be designed to carry a uniformly distributed load of not less than 1000 pounds	Concur	5%	17%	17%
4. Dismounting step	a. Slipped or fell from step		Long vertical grab handles	78%	87%	90%
% of Total	b. Step was wet, icy or oily	7.3.7.1 The surface and edges of steps shall have a slip-resistant surface. They shall be self-cleaning or be protected against the accumulation of mud, snow, and ice.	Concur	11%	16%	20%**
No. Injuries 6%			Long vertical grab handles			
Days Lost 5%						
Direct Costs 4%						
5. Mounting cab	a. Struck by door		Door latch to hold door in open position.	6%	2%	3%

*IRIS Reporting period, December 1975 to December 1976, includes 3,774 OSHA recordable injuries, 1,013 of which were equipment related.

** Overlapping numbers

EVALUATION OF EQUIPMENT MODIFICATIONS
USING IRIS INJURY DATA*

TASK	HAZARDS	ANSI Z245.1 STANDARDS	EQUIPMENT MODIFICATIONS	PERCENT OF TASK % NO. INJ.	% DAYS LOST	% DIRECT COSTS
5. Mounting cab (contd.)	b. Struck against vehicle part		Slip resistant running board. Grab handles. Slip resistant wheel fender. Chassis specifications.	37%	24%	27%
% of Total						
No. Injuries 6%	c. Slipped on running board, and struck against truck, or fell		Grab handles. Chassis specifications.	48%	32%	33%
Days Lost 5%	d. Running board was wet, icy, or oily		Slip resistant running board. Grab handles. Slip resistant wheel fender. Chassis specifications.	21%	10%	8%**
Direct Costs 3%						
6. Dismounting cab	a. Misstepped and fell			11%	16%	20%
% of Total	b. Slipped on or fell from running board		Grab handles. Chassis specifications.	57%	64%	59%
No. Injuries 8%	c. Running board was wet, icy, or oily		Slip resistant running board. Grab handles. Slip resistant wheel fender. Chassis specifications.	29%	21%	21%**
Days Lost 8%						
Direct Costs 6%						
	d. Struck against vehicle part		Grab handles. Door latch.	12%	3%	6%
	e. Caught in vehicle part (e.g., door, handle)		Grab handles. Door latch.	11%	2%	3%
7. Dumping container	a. Struck by waste that fell out of the hopper or container			3%	3%	<1%

*IRIS Reporting period, December 1975 to December 1976, includes 3,774 OSHA recordable injuries, 1,013 of which were equipment related.

**Overlapping numbers

EVALUATION OF EQUIPMENT MODIFICATIONS
USING IRIS INJURY DATA*

TASK	HAZARDS	ANSI Z245.1 STANDARDS	EQUIPMENT MODIFICATIONS	PERCENT OF TASK % NO. INJ.	% DAYS LOST	% DIRECT COSTS
7. Dumping (contd.)	b. Struck against truck when turning to dump			28%	20%	26%
% of Total	c. Hand caught between container and the edge of hopper			26%	33%	26%
No. Injuries 19%						
Days Lost 14%	d. Struck by waste ejected by the hopper		Flaps over rear hopper (Garwood). Side flap on side loader.	19%	5%	8%
Direct Costs 9%	e. Fell against hopper due to wet, icy or oily surfaces			4%	6%	2%
	f. Fell off step of side loader	7.5.4.1 Steps shall have a slip-resistant surface. They shall be self-cleaning or be protected against the accumulation of mud, snow, and ice.	Concur	5%	11%	11%
	g. Struck by tailgate popping open		Warning buzzer for anytime tailgate is open.	3%	6%	4%
8. Dumping uncontained waste	a. Struck by furniture, wood, or unbundled shrubbery which fell out of vehicle		Liftgate on open body truck to be used in conjunction with dolly.	32%	49%	57%
% of Total						
No. Injuries 3%						
Days Lost 1%						
Direct Costs 1%						
9. Operating packing mechanism	a. Struck by waste ejected from hopper		Flaps over rear hopper (Garwood). Side flap on side loader.	56%	11%	24%

*IRIS Reporting period, December 1975 to December 1976, includes 3,774 OSHA recordable injuries, 1,013 of which were equipment related.

**Overlapping numbers

EVALUATION OF EQUIPMENT MODIFICATIONS
USING IRIS INJURY DATA*

TASK	HAZARDS	ANSI Z245.1 STANDARDS	EQUIPMENT MODIFICATIONS	PERCENT OF TASK % NO. INJ.	% DAYS LOST	% DIRECT COSTS
9. Operating packing mechanism (contd.) % of Total No. Injuries 4% Days Lost 3% Direct Costs 3%	b. Caught hand in packer	7.3.3.2 Controls (for example, for operating the packer panel, tailgate, point-of-operation guards, ejector panel, container hoists) shall be designed and located to prevent unintentional activation. 7.3.6 Point-of-Operation Protection. The employee shall be protected from pinch points during the packing cycle by one of the following means: (1) Deadman control from the initiation of the packing cycle until the packer panel clears the loading sill. (2) An elevating hopper that raises any pinch point during the packing cycle at least 5 feet above the working surface. (3) A movable guard that is interlocked with the packing cycle so that it is in place before the packer panel is within 6 inches of the pinch point. The movable barrier shall be designed so that it shall not be hazardous in itself. (4) A control that provides an interrupted cycle. Actuation of the control shall cause the packer panel to stop not less than 6 inches or more than 16 inches from the pinch point created by the	Concur Two-handed packer controls.	10%	72%	59%

*IRIS Reporting period, December 1975 to December 1976, includes 3,774 OSHA recordable injuries, 1,013 of which were equipment related.

**Overlapping numbers

EVALUATION OF EQUIPMENT MODIFICATIONS
USING IRIS INJURY DATA*

TASK	HAZARDS	ANSI Z245.1 STANDARDS	EQUIPMENT MODIFICATIONS	PERCENT OF TASK % NO. INJ.	% DAYS LOST	% DIRECT COSTS
9. Operating packing mechanism (contd.)		packer panel as it moves past the hopper loading sill. The control shall require reactivation to complete the packing cycle by a subsequent motion by the operator. (5) Other means, at least as effective as those given in 7.3.6(1) through 7.3.6(4), that will protect an employee from the pinch point.				
	c. Struck by tailgate while operating packing mechanism	7.3.3.2 Controls (for example, for operating the packer panel, tailgate, point-of-operation guards, ejector panel, container hoists) shall be designed and located to prevent unintentional activation.	Concur Warning buzzer for anytime tailgate is open.	5%	7%	6%
10. Opening or closing equipment part	a. Struck by tailgate	7.5.7.1 Tailgate Locking Devices. When the tailgate is opened to unload the compacted refuse, the locking mechanism shall be designed to prevent the sudden opening of the tailgate.	Safety chain for side swinging doors or side tailgate latch.	35%	29%	79%
% of Total						
No. Injuries 5%						
Days Lost 5%	b. Caught fingers in tailgate			18%	13%	5%
Direct Costs 10%						
11. Hooking or unhooking equipment	a. Overexertion when hooking or unhooking trailer		Chain to keep trailer tongue in horizontal position.	14%	34%	23%
% of Total						

*IRIS Reporting period, December 1975 to December 1976, includes 3,774 OSHA recordable injuries, 1,013 of which were equipment related.

** Overlapping numbers

EVALUATION OF EQUIPMENT MODIFICATIONS
USING IRIS INJURY DATA*

TASK	HAZARDS	ANSI Z245.1 STANDARDS	EQUIPMENT MODIFICATIONS	PERCENT OF TASK % NO. INJ.	% DAYS LOST	% DIRECT COSTS
11. Hooking (contd.)	b. Struck by trailer tongue		Chain to keep trailer tongue in horizontal position.	21%	16%	9%
No. Injuries 1%						
Days Lost <1%						
Direct Costs <1%						
12. Standing or walking behind or next to vehicle	a. Struck by object ejected by the packing mechanism		Flaps for rear hopper (Garwood). Side flap on side loader.	38%	3%	13%
	b. Struck by private vehicle.			18%	48%	35%
% of Total	c. Struck by backing vehicle		Back-up alarms, back safe.	4%	2%	3%
No. Injuries 6%	d. Struck by vehicle driven by coworker			7%	18%	17%
Days Lost 7%						
Direct Costs 5%						
13. Carrying container	a. Struck by vehicle			25%	55%	53%
% of Total	b. Slipped and struck against vehicle			25%	32%	36%
No. Injuries 4%	c. Struck against vehicle			25%	4%	3%
Days Lost 4%						
Direct Costs 3%						

*IRIS Reporting period, December 1975 to December 1976, includes 3,774 OSHA recordable injuries, 1,013 of which were equipment related.
**Overlapping numbers

EVALUATION OF EQUIPMENT MODIFICATIONS
USING IRIS INJURY DATA*

TASK	HAZARDS	ANSI Z245.1 STANDARDS	EQUIPMENT MODIFICATIONS	PERCENT OF TASK % NO. INJ.	% DAYS LOST	% DIRECT COSTS
14. Pushing or Pulling Container	a. Caught body part between bulk container and vehicle			58%	91%	91%
% of Total						
No. Injuries 1%						
Days Lost 2%						
Direct Costs 1%						

*IRIS Reporting period, December 1975 to December 1976, includes 3,774 OSHA recordable injuries, 1,013 of which were equipment related.

**Overlapping numbers

OVEREXERTION ACCIDENTS*

PRELIMINARY TASK/HAZARD ANALYSIS

TASK	HAZARDS	POSSIBLE COUNTERMEASURES
1. Lifting Container Percent of Total No. Injuries 43% Days Lost 35% Direct Cost 37%	a. Heavy Container Percent of Task No. Inuries 72% Days Lost 78% Direct Cost 77%	Test can for weight before lifting. Get help for heavy containers; train employees on team lifting. Modify or enforce container weight regulations. Public education programs. Use proper lifting techniques. Avoid twisting or turning while lifting, and do not jerk the container up.
	b. Large Container (1) Oil drum Percent of Task No. Injuries 2% Days Lost 1% Direct Cost 1%	Modify or enforce container size regulations. Get help with bulky containers Train employees on team lifting.
	(2) Tote barrel, wheeled cart Percent of Task No. Injuries 9% Days Lost 8% Direct Cost 6%	Change from backyard to curbside. Discourage overfilling of tote barrels and carts.
2. Lifting to Dump Container Percent of Total No. Injuries 18% Days Lost 17% Direct Cost 13%	a. Heavy Container Percent of Task No. Injuries 57% Days Lost 70% Direct Cost 67%	Test can for weight before lifting. Get help for heavy containers; train employees on team lifting. Modify or enforce container weight regulations. Public education programs. Use proper lifting techniques. Avoid twisting or turning while lifting, and do not jerk the container up.
	b. Large Container Percent of Task No. Injuries 5% Days Lost 2% Direct Cost 3%	Change from backyard to curbside. Discourage overfilling of tote barrels and carts.

*IRIS reporting period: December 1975 to December 1976 indluded 3,774 OSHA recordable inuries, 839 of which were overexertion accidents.

OVEREXERTION ACCIDENTS

PRELIMINARY TASK/HAZARD ANALYSIS

TASK	HAZARDS	POSSIBLE COUNTERMEASURES
3. Dumping Container Percent of Total No. Injuries 11% Days Lost 16% Direct Cost 15%	a. Heavy Container Percent of Task No. Inuries 48% Days Lost 42% Direct Cost 41%	Maintain firm grip and stance; stand within easy dumping of hopper. Get help for heavy containers; train employees on team lifting. Avoid twisting actions.
	b. Large Container	Same as above.
	(1) Oil drum Percent of Task No. Injuries 3% Days Lost 1% Direct Cost 2%	
	(2) Tote barrel, wheeled cart Percent of Task No. Injuries 7% Days Lost 7% Direct Cost 5%	Same as above.
4. Pushing/Pulling Container Percent of Total No. Injuries 6% Days Lost 11% Direct cost 11%	a. Bulk Container Percent of Task No. Injuries 65% Days Lost 87% Direct Cost 88%	Container placement regulations should require level surface. Train employees on team handling of bulk container.

OVEREXERTION ACCIDENTS

PRELIMINARY TASK/HAZARD ANALYSIS

TASK	HAZARDS	POSSIBLE COUNTERMEASURES
4. Pushing/Pulling Container continued	b. Heavy Container Percent of Task No. Injuries 13% Days Lost 5% Direct Cost 4% c. Large Container (1) Oil drum Percent of Task No. Injuries 6% Days Lost 2% Direct Cost 3% (2) Tote barrels, wheeled carts Percent of Task No. Injuries 4% Days Lost 2% Direct Cost <1%	
5. Carrying Container Percent of Total No. Injuries 3% Days Lost 3% Direct Cost 3%	a. Heavy Container Percent of Task No. Injuries 62% Days Lost 47% Direct Cost 40% b. Tote Barrel, Wheeled Cart Percent of Task No. Injuries 37% Days Lost 36% Direct Cost 29%	Keep close to body; back straight. Provide wheeled carts instead of tote barrels.

Several questions arose during the discussions at the accident control workshops. IRIS would appreciate hearing from users who were unable to attend on the following topics:

1. Have you found a glove that is durable, can breathe (does not get too sweaty from use) as well as provides a firm grip? Or do you utilize other methods to resolve this problem (e.g., provide a leather as well as a rubber pair)?

2. What are your experiences with various safety shoes? Have you found one that is slip resistant and comfortable?

3. How do you dump a load when the ejector blade is not operating? One user has to weld the tailgate open and manually remove the waste at the landfill. Has your organization devised a better method?

When the answers to these questions are compiled, they will be shared with all users through future issues of the IRIS NEWS. If you have a particular question which you would like addressed to all users, please let IRIS know.

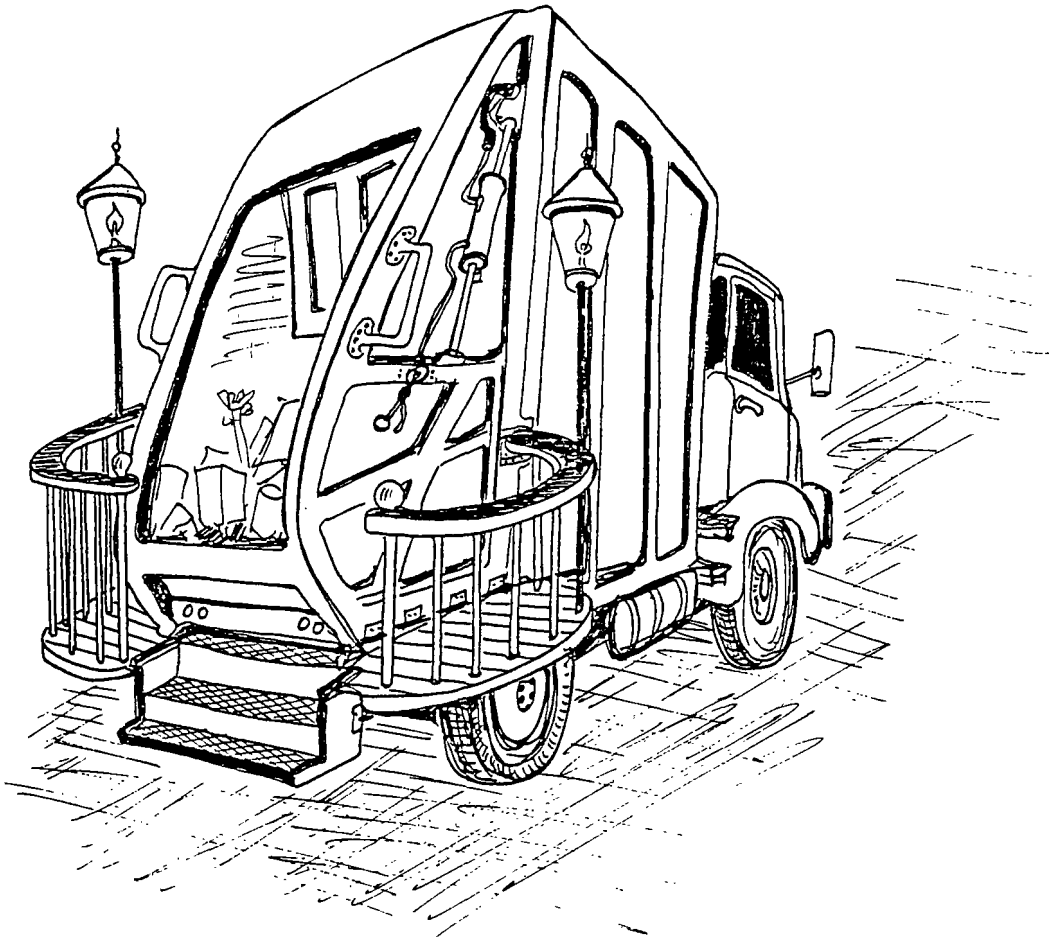

EXHIBIT 19

IRIS NEWS

VOL. I
No. 5
AUGUST 1977

Injury Rates for Task vs Hourly Collection

Task vs hourly shift continues to be a controversial issue in many sectors, especially in the solid waste management industry. On a task collection system, crews are allowed to leave work as soon as they finish their assigned "task." A "task" can be a certain route, a set amount of tonnage, or some other definition for completion of the task. An hourly system is one in which the employee must remain on the job for a fixed number of hours (e.g., eight) regardless of when they finish. Employees who are paid for an eight hour day, but who are not required to stay at work for the full eight hours, are not considered to be on an hourly shift, but on a task system.

Opponents of the task system argue that task workers are likely to hurry to complete their job in the shortest amount of time, increasing their risk of injury. Supporters contend that a task worker concentrates more on his job, thus reducing the risk of injury.

A review of IRIS data for fourth quarter 1976 shows that out of 83 users on-line, 45 have systems that are entirely task and 17 completely hourly. The remainder use systems that contain elements of both. Injury rates compiled from single system IRIS participants are given in Table A. Preliminary analysis indicates a relatively small difference between the two systems. In terms of the OSHA incidence rate (the number of OSHA recordable cases divided by man-hours of exposure, multiplied by 200,000 hours), it was 37.70 (task) vs 31.26 (hourly). The OSHA incidence rate for lost workday cases follows a similar pattern. However, there is a marked difference in terms of the OSHA "severity" rate (the number of lost workdays divided by man-hours of exposure, multiplied by 200,000). It is roughly equivalent to the number of workdays lost per 100 full-time employees per year. The 268.69 for task compared with the 151.88 for hourly indicates that although the frequency of injuries for task and hourly systems are close, injuries to employees for IRIS users on the task system resulted in a greater number of lost workdays.

IRIS - Injury Reporting and Information System

safety sciences Division of WSA Inc., 11772 Sorrento Valley Road
San Diego, CA 92121 (714) 755-9359 & 452-1010

A brief check of the characteristics of the "task" system vs the "hourly" system does not show any other obvious factor that could explain the difference. The two types of systems do not appear to differ in characteristics such as residential vs commercial, curbside vs backyard or crew size. However, we are following up with a more detailed study.

TABLE A

	Hours of Exposure	OSHA Cases	Lost Workday Cases	Lost Workdays	OSHA Incidence	OSHA Incidence for Lost Workday Cases	OSHA "Severity'
Task	2,753,442	519	282	3,732	37.70	20.48	268.69
Hourly	1,900,066	297	156	1,443	31.26	16.42	151.88

Solid Waste Safety Library. The following works provide an excellent foundation, or make a good addition, to any collection of solid waste management material:

- National Safety Council's Public Employee Safety Guide for Refuse Collection (1974) International Standard Book Number: 0-87912-112-2.
- U. S. Environmental Protection Agency Operation Responsible: Safe Refuse Collection (1972) Instructional manual with slides and training manual with slides.
- American National Standards Institute ANSI Z245.1-1975 "Safety Requirements for Refuse Collection and Compaction Equipment" and ANSI Z245.3-1977, "Safety Requirement for the Stability of Refuse."

Additional material includes:

- Cimino, J. A. Health and safety in the solid waste management industry. American Journal of Public Health, 65(1): 38-46, Jan. 1975.
- Cimino, J.A. Health and safety in the solid waste industry. Proceedings; New York Academy of Sciences Section of Environmental Sciences, May 1970.
- Costello, C. and R. Lascoe. Are your city employees safe on the job? Nation's Cities, 9(5): 16-17, May 1971.
- Diamond, A. Worst risk firm sets insurance rates. Solid Waste Management/Refuse Removal Journal, 11(5): 48-52, May 1968.
- Dunford, W. APWA Ontario Chapter accident survey. APWA Reporter, Feb. 1973, p. 16-17.
- Dunford, W. Collection personnel have highest accident rate. Solid Waste Management/Refuse Removal Journal, 16(4): 14+, Apr. 1973.

- Kimura, M. (Fuji Heavy Industries Co.). Safety device for rear gate of garbage truck. Japanese Patent 46-19,522; filed Apr. 2, 1968; issued July 7, 1971.

- King, K. How to calculate injury rates. Waste Age, Mar. 1975.

- King, K. The use of accident statistics. National Safety Congress Transactions, 8: 89-91, 1974.

- LeSage, F. Well designed vehicles need well trained crews. Sanitation Industry Year Book: 40, 42, 44, 48, 1970.

- MacKay, B.B., Jr. Training pays dividends in reduced injuries. Solid Waste Management/Refuse Removal Journal, 16(2): 30, Feb. 1973.

- O'Dette, R.G. Health hazards associated with solid waste management. Unpublished manuscript, Nov. 24, 1969. p. 24.

- Sanders, T. Basic elements of a sound accident prevention program. Waste Age, May/June 1973, p. 122+.

- Star, S. Safety standards for solid waste management. Public Works, 102(4): 97-98, Apr. 1971.

- State of California, Department of Industrial Relations, Bureau of Labor Statistics and Research. Disabling work injuries in refuse collection. In Work Injuries in California, San Francisco, 1967, p. 3-6.

- Van Beek, G. Personnel: accident prevention. National Safety News, 99(4): 41+, Apr. 1969.

- Van Beek, G. The Milwaukee story - one year later. Waste Age, July 1974.

- Van Kleek, L.W. Safety practices at sanitary landfill. Public Works, 90(3): 113, Aug. 1969.

- Wagner, L. E. Chemical wastes: stressing safety makes extensive recovery viable. Solid Waste Management/Refuse Removal Journal, 18(6): 12-13, 40, June 1975.

- Wener, S.D. IRIS - A new service. Nation's Cities, Sept. 1975.

- A medical guide to driver selection. Solid Waste Management/Refuse Removal Journal, 14(10): 52, 60, Oct. 1971.

- Driver safety standards cut accident potential. Solid Waste Management/Refuse Removal Journal, 17(12): 40-41, 71, Dec. 1974.

- Driver testing: written and road examinations. Sanitation Industry Yearbook, 1975, p. 56, 76, 78, 80, 82.

- Equipment danger markings. Solid Waste Management/Refuse Removal Journal, 13(7): 6-7, July 1970.

- Injury record tops all others in country. Solid Waste Management/Refuse Removal Journal, 12(1): 10-11, 26, 32-34, 44, Jan.-Feb. 1969.

- In Michigan safety standards for packer units updated. Solid Waste Management/Refuse Removal Journal, 17(7): 52-53, 59, July 1974.

- Municipal accident prevention. The American City, 77: 106, Jan. 1962.

- Public employee safety guide for refuse collection. National Safety Council, 1974.

- Refuse collection in municipalities. Data sheet 618, Chicago, National Safety Council, 1969, p. 12.

- Safety checklist: a handy guide for evaluating a solid waste contractor's program for employee protection. Sanitation Industry Yearbook, 1974, p. 10+.

- Some vital safety rules. Solid Waste Management/Refuse Removal Journal, 15(3): 74-75, Mar. 1972.

Quarterly Safety Management Reports (QSMRs)

IRIS would like to thank everyone who has taken the time to complete the evaluation form included with their QSMR. We hope to hear from all establishments. Comments to date have included:

> "Although this is our first QSMR, it does seem accurate in the analysis of our injury problems. In future reports an analysis of two man routes versus three man routes would be useful."

> "... I do agree with most of your evaluations and our employees are informed ASAP after receipt of the analysis. More attention should be placed on gambling or taking a chance to prevent the preventable injury. This should be impressed upon the management also."

> "I agree with operational costs, but the IRIS analysis doesn't address our specific problem. For instance, our major injuries and frequency occurs in brush collection which is a pulverizor machine and a truck. To resolve this problem would require abandonment of our present system for a more costly bulk hauling system. It isn't cost effective."

> "Because of our serious injury/accident problems, your advice is often helpful. Unfortunately, however, we are unable to impress upon the working force the need for better safety and care. The city is currently attempting to abolish the oil drum containers; however, this effort is not being supported by the men because they feel it is an effort to reduce the number of persons now on the refuse vehicle."

"IRIS evaluation of our injury problem is very practical and could be appl cable if the QSMR was received within three (3) months..."

A major goal of IRIS is to decrease the time between the end of the quarter a the publishing of the QSMR. Part of the current problem lies in data collectio While a great improvement has been made, there are still users who save up the injuries, some call them in on a monthly basis, limiting the time available obtain all necessary information.

First Quarter preprintouts - Having trouble deciphering the codes on the "Ti Lost and Direct Costs Status" printouts? A key is included below.

Case Status

N - newly open, time lost and cost information has not been received or entered.

O - open

C - closed

DATE OF INJURY	NAME	SOC SEC NUMBER	N/ O/C	CASE TYPE	WKDY LOST	LGHT DUTY	MED EXP	L/T COSTS	DISAB BEN
03-01-77			C	LWC	10	0	166	204	0

OVEREXERTED SELF WITH STD MTL CONT WHICH WAS UNUSUALLY HEAVY WHILE LIFTING STD MTL CONT INJURING BACK RESULTING IN SPRAIN OR STRAIN

LWC - lost workday case

FA - first aid

NFWLD - nonfatal without lost workdays

PPD - permanent partial disability

PTD - permanent total disability

F - fatality

CALENDAR

September 1977

Sept. 10-15, 1977 — International Public Works Congress and Equipment Show. Ar erican Public Works Association. Chicago, Illinois. Sol· Waste topics include: Omaha's New Solid Waste Baling & Ra· Haul System, Collection from Multi-Family Dwellings, Impl mentation of Resource Conservation and Recovery Act of 197 Changing Requirements of Solid Waste Management, Resour Recovery Projects (Status report), Making Watts from Waste A Joint Venture, Switching to Semi-Mechanical Collection, ar Reducing Accidents Cuts Collection Costs.

October 1977 — National Safety Congress and Exposition. National Safe Council. Chicago, Illinois.

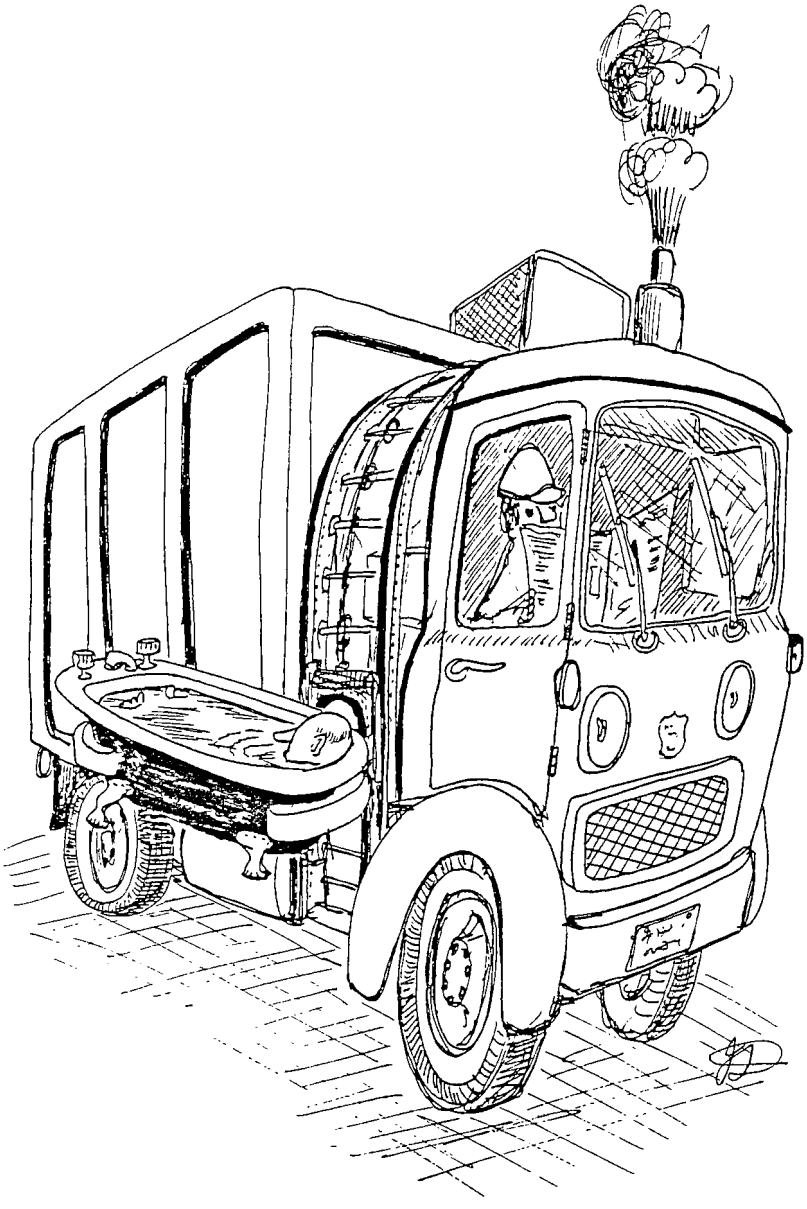

EXHIBIT 20

IRIS NEWS

VOL. 1
No. 6
SEPTEMBER 1977

Annual Injury Rates

IRIS has been in operation since December 1975, and the number of participants has increased from 11 to 90. The following figures detail annual injury and frequency rates for the 13 month period of December 1975 to December 1976. IRIS users can compare their injury rate rankings with the averages for all users, which are underlined in FIGURES 4 to 7.

The days lost and direct costs have been updated as of September 1st. However, open cases are still being monitored for time lost and cost information, and these figures may alter slightly in the future.

FIGURE 1 compares the IRIS user data with that of the Bureau of Labor Statistics* for all private industries. As can be seen, the solid waste industry compares poorly. The OSHA incidence rate for the solid waste industry at 41 was four times higher, while the highest private industry rate was in anthracite mining (22.3). This figure means that two out of five employees of the IRIS participants last year had sustained non-first aid injuries.

The lost workday cases rate of 24 was about seven times higher, and the private industry with the highest severity rate was the lumber and wood products industry at 9.0. This rate indicates that in 1976 one out of every four employees sustained a lost time injury, not just those who were injured.

The OSHA severity rate (lost workdays) of 327 was also much higher than that of private industry (54.6) by six times. The water transportation industry had the highest OSHA severity rate (266.9) for the private industry sector. The severity rate of 327 indicates that for every sanitation employee on IRIS, 3.27 days were lost due to on-the-job injuries.

*News, U.S. Department of Labor, Bureau of Labor Statistics, USDL-75-647 (11/18/75).

IRIS - Injury Reporting and Information System

safety sciences Division of WSA Inc., 11772 Sorrento Valley Road
San Diego, CA 92121 (714) 755-9359 & 452-1010

The average workdays lost per lost workday case of 13.39 was the only rate lower than that of private industry. However, this is not actually a positive trend when considering that the solid waste industry has seven times more lost time cases.

IRIS participant data reveals that the average direct costs per OSHA recordable injury was $415, the average direct costs per lost workday case was $638 and the average direct cost per man-year was $169.

List of Figures

FIGURE 1 Comparison of IRIS Participant Data with Bureau of Labor Statistics Data

FIGURE 2 Summary of Accident Factors for Selected Accident Characteristics with Highest Percent of OSHA Recordable Injuries, Workdays Lost and Direct Costs

FIGURE 3 Number of Injuries Reported by Type of Severity Comparison of IRIS Users

FIGURE 4 Average Injury Rates by IRIS Users Ranked from Highest to Lowest

FIGURE 5 Average Workdays Lost per Lost Workday Case by IRIS Users Ranked from Highest to Lowest

FIGURE 6 Direct Costs by IRIS Users Ranked from Highest to Lowest

FIGURE 7 Direct Costs for Lost Day Cases by IRIS Users Ranked from Highest to Lowest

FIGURES 8-10 Activities Ranked from Highest to Lowest Percent of OSHA Recordable Injuries, Workdays Lost and Direct Costs

FIGURES 11-13 Accident Types Ranked from Highest to Lowest Percent of OSHA Recordable Injuries, Workdays Lost and Direct Costs

FIGURES 14-16 Accident Sites Ranked from Highest to Lowest Percent of OSHA Recordable Injuries, Workdays Lost and Direct Costs

FIGURES 17-19 Injury Types Ranked from Highest to Lowest Percent of OSHA Recordable Injuries, Workdays Lost and Direct Costs

FIGURE 20 Parts of Body Injured Ranked from Highest to Lowest Percent of OSHA Recordable Injuries, Workdays Lost and Direct Costs

COMPARISON OF IRIS PARTICIPANT DATA WITH BUREAU OF LABOR STATISTICS DATA

	IRIS PARTICICPANT DATA (12/75-12/76)	BLS (1974) PRIVATE INDUSTRY SECTOR
OSHA INCIDENCE RATE - $\frac{\text{No. OSHA recordable injuries}}{\text{Total manhours}} \times 200{,}000$	41	10.4
LOST WORKDAY CASES RATE - $\frac{\text{No. lost workday cases}}{\text{Total manhours}} \times 200{,}000$	24	3.5
OSHA LOST WORKDAYS RATE (SEVERITY) - $\frac{\text{No. lost workdays}}{\text{Total manhours}} \times 200{,}000$	327	54.6
AVG. WORKDAYS LOST PER LOST WORKDAY CASE	13.39	16
AVG. DIRECT COSTS PER OSHA RECORDABLE INJURY	$415	--
AVG. DIRECT COSTS PER LOST WORKDAY CASE	$638	--
AVG. DIRECT COSTS PER MAN YEAR	$169	--

FIGURE 2

SUMMARY OF ACCIDENT FACTORS FOR SELECTED ACCIDENT CHARACTERISTICS WITH HIGHEST PERCENT OF OSHA RECORDABLE INJURIES OSHA DAYS LOST AND DIRECT COSTS

December 1975 To December 1976

Type of Characteristic	Factors With The:		
	Highest % of OSHA Recordable Injuries	Highest % of OSHA Days Lost	Highest % of Direct Costs
Activity	Lifting or dumping container - 37% Getting off equipment - 8% Standing or walking - 7%	Lifting or dumping container - 34% Riding on equipment - 10% Getting off equipment - 9%	Lifting or dumping container - 29% Riding on equipment - 10% Standing or walking - 7%
Accident Type	Overexertion involving container - 18% Slip on same level - 6% Struck by waste - 6%	Overexertion involving container - 23% Vehicle accident - 9% Caught between objects - 7%	Overexertion involving container - 20% Caught between objects - 11% Vehicle accident - 11%
Accident Site	On collection route at back of truck - 35% On collection route at curb - 17% On collection route in customer's yard - 10%	On collection route at back of truck - 25% On collection route at curb - 22% On collection route on step of vehicle - 8%	On collection route at back of truck - 29% On collection route at curb - 14% On collection route on step of vehicle - 9%
Nature of Injury	Sprain or strain - 41% Bruise - 20% Cut or puncture - 19%	Sprain or strain - 54% Bruise - 12% Fracture - 12%	Sprain or strain - 47% Bruise - 13% Fracture - 11%
Part of Body	Back - 19% Eyes - 9% Leg - 8%	Back - 34% Leg - 7% Ankle - 7%	Back - 29% Multiple body parts - 12% Leg - 8%

NUMBER OF INJURIES REPORTED BY TYPE OF SEVERITY
COMPARISON OF 'IRIS' USERS

REPORTING PERIOD: DECEMBER 1975 - DECEMBER 1976

INSTRUCTIONS: THE PERCENTAGES ARE A FRACTION OF THE TOTAL CASES REPORTED. THEY TOTAL TO APPROXIMATELY 100% IF READ HORIZONTALLY. COMPARE YOUR ORGANIZATION'S PERCENTAGES WITH THE AVERAGE AND WITH OTHER IRIS USERS. HIGHER THAN AVERAGE PERCENTAGES IN THE LOWER SEVERITY GROUPS, I.E., TOWARD THE LEFT, ARE DESIRED, AS ARE LOWER THAN AVERAGE PERCENTAGES TOWARD THE RIGHT.

IRIS USER NO.	TOTAL CASES RPT'D	FIRST AID		NON-FATAL W/O LST WKDAY		LOST WKDY CASES		PERM DISAB		FATALITY	
		NO.	%	NO.	%	NO.	%	NO.	%	NO.	%
AVG	4,793	1,030	21	1,503	31	2,238	47	21	0.44	1	0.02
101	126	15	12	68	54	42	33	1	0.79	0	0.00
103	31	15	48	0	0	16	52	0	0.00	0	0.00
109	240	20	8	85	35	135	56	0	0.00	0	0.00
111	232	21	9	75	32	133	57	3	1.29	0	0.00
113	2	0	0	2	100	0	0	0	0.00	0	0.00
115	28	7	25	10	36	10	36	1	3.57	0	0.00
125	290	14	5	60	21	213	73	3	1.03	0	0.00
133	3	0	0	1	33	2	67	0	0.00	0	0.00
136	7	1	14	1	14	5	71	0	0.00	0	0.00
140	175	18	10	41	23	115	66	1	0.57	0	0.00
146	111	22	20	52	47	36	32	1	0.90	0	0.00
148	29	1	3	17	59	11	38	0	0.00	0	0.00
149	14	1	7	4	29	9	64	0	0.00	0	0.00
152	17	3	18	7	41	7	41	0	0.00	0	0.00
157	8	0	0	1	12	7	87	0	0.00	0	0.00
161	75	31	41	24	32	20	27	0	0.00	0	0.00
170	94	26	28	15	16	53	56	0	0.00	0	0.00
171	143	6	4	58	41	79	55	0	0.00	0	0.00
172	307	1	0	119	39	183	60	4	1.30	0	0.00
178	28	1	4	13	46	14	50	0	0.00	0	0.00
179	97	29	30	29	30	39	40	0	0.00	0	0.00
181	167	22	13	51	31	94	56	0	0.00	0	0.00
182	14	2	14	7	50	5	36	0	0.00	0	0.00
183	33	9	27	8	24	16	48	0	0.00	0	0.00
186	93	32	34	28	30	33	35	0	0.00	0	0.00
191	79	2	3	27	34	50	63	0	0.00	0	0.00
197	12	1	8	2	17	8	67	1	8.33	0	0.00
201	4	2	50	1	25	1	25	0	0.00	0	0.00
204	32	0	0	24	75	8	25	0	0.00	0	0.00
207	159	2	1	69	43	87	55	1	0.63	0	0.00
210	13	0	0	4	31	9	69	0	0.00	0	0.00
211	35	8	23	4	11	23	66	0	0.00	0	0.00
212	42	1	2	1	2	39	93	1	2.38	0	0.00
215	3	0	0	0	0	3	100	0	0.00	0	0.00
217	705	362	51	256	36	86	12	0	0.00	1	0.14

IRIS USER NO.	TOTAL CASES RPT'D	FIRST AID		NON-FATAL W/O LST WKDAY		LOST WKDY CASES		PERM DISAB		FATALITY	
		NO.	%	NO.	%	NO.	%	NO.	%	NO.	%
221	53	21	40	0	0	32	60	0	0.00	0	0.00
226	3	0	0	3	100	0	0	0	0.00	0	0.00
235	42	0	0	32	76	10	24	0	0.00	0	0.00
236	101	9	9	29	29	63	62	0	0.00	0	0.00
237	48	19	40	9	19	20	42	0	0.00	0	0.00
242	3	0	0	0	0	2	67	1	33.33	0	0.00
244	17	0	0	5	29	12	71	0	0.00	0	0.00
260	113	1	1	37	33	75	66	0	0.00	0	0.00
261	2	0	0	0	0	2	100	0	0.00	0	0.00
265	167	78	47	18	11	71	43	0	0.00	0	0.00
272	27	4	15	9	33	14	52	0	0.00	0	0.00
275	21	0	0	8	38	13	62	0	0.00	0	0.00
283	39	15	38	14	36	10	26	0	0.00	0	0.00
285	1	0	0	0	0	1	100	0	0.00	0	0.00
286	2	1	50	1	50	0	0	0	0.00	0	0.00
292	45	27	60	7	16	11	24	0	0.00	0	0.0
295	30	2	7	13	43	15	50	0	0.00	0	0.0
296	33	11	33	4	12	17	52	1	3.03	0	0.0
299	16	0	0	14	87	2	12	0	0.00	0	0.0
316	271	105	39	65	24	101	37	0	0.00	0	0.0
318	28	10	36	0	0	18	64	0	0.00	0	0.0
323	6	2	33	2	33	2	33	0	0.00	0	0.0
324	9	1	11	4	44	4	44	0	0.00	0	0.0
325	22	2	9	6	27	14	64	0	0.00	0	0.0
326	1	0	0	0	0	1	100	0	0.00	0	0.0
329	12	6	50	3	25	3	25	0	0.00	0	0.0
330	19	1	5	7	37	11	58	0	0.00	0	0.0
333	10	0	0	7	70	3	30	0	0.00	0	0.0
336	3	0	0	0	0	3	100	0	0.00	0	0.0
337	26	0	0	0	0	26	100	0	0.00	0	0.0
338	16	0	0	0	0	16	100	0	0.00	0	0.0
339	23	3	13	0	0	20	87	0	0.00	0	0.
340	41	19	46	14	34	8	20	0	0.00	0	0.
341	24	5	21	1	4	18	75	0	0.00	0	0.
343	10	5	50	2	20	3	30	0	0.00	0	0.
344	1	0	0	0	0	1	100	0	0.00	0	0.
345	1	0	0	0	0	1	100	0	0.00	0	0.
346	5	1	20	0	0	4	80	0	0.00	0	0.
347	4	1	25	2	50	1	25	0	0.00	0	0.
348	3	0	0	1	33	2	67	0	0.00	0	0.
349	4	0	0	3	75	1	25	0	0.00	0	0.
350	6	2	33	1	17	3	50	0	0.00	0	0.
351	2	1	50	0	0	1	50	0	0.00	0	0.
353	3	1	33	1	33	1	33	0	0.00	0	0.
354	6	0	0	4	67	2	33	0	0.00	0	0.
355	6	0	0	4	67	2	33	0	0.00	0	0.
358	3	0	0	2	67	0	0	1	33.33	0	0.
359	11	0	0	4	36	7	64	0	0.00	0	0.
361	3	1	33	2	67	0	0	0	0.00	0	0.
362	1	0	0	0	0	0	0	1	100.00	0	0
363	2	1	50	1	50	0	0	0	0.00	0	0

AVERAGE INJURY RATES BY 'IRIS' USERS
RANKED FROM HIGHEST TO LOWEST

REPORTING PERIOD: DECEMBER 1975 - DECEMBER 1976

DEFINITIONS: AVERAGE RATIO = RATE / AVERAGE FOR THE RATE.
OSHA INCIDENCE RATE = (NUMBER OF OSHA RECORDABLE CASES / MAN-HOURS EXPOSURE) X 200,000.
ROUGHLY EQUIVALENT TO THE NUMBER OF CASES PER 100 FULL TIME EMPLOYEES PER YEAR. DOES NOT INCLUDE FIRST AID INJURIES. DOES INCLUDE MEDICAL TREATMENT, LOST TIME, PERMANENT DISABILITY AND FATALITY CASES.
SEVERITY RATE = (NUMBER OF WORKDAYS LOST / MAN-HOURS EXPOSURE) X 200,000.
ROUGHLY EQUIVALENT TO THE NUMBER OF WORKDAYS LOST PER 100 FULL TIME EMPLOYEES PER YEAR.

INSTRUCTIONS: FIND YOUR ORGANIZATION'S USER NUMBER AND COMPARE HOW IT RANKS WITH THE AVERAGE AND OTHER IRIS USERS.
A GOOD STANDING IS AN AVERAGE RATIO OF LESS THAN .50.
A POOR STANDING IS AN AVERAGE RATIO OF GREATER THAN 1.25.

OSHA INCIDENCE RATE					INCIDENCE RATE - LWC				SEVERITY RATE		
IRIS USER NO.	MAN-HOURS EXPOSURE	NO. INJ	RATE	AVG RATIO	IRIS USER NO.	NO. INJ	RATE	AVG RATIO	IRIS USER NO.	RATE	AVG RATIO
354	9,289	6	129	3.18	103	16	109	4.47	358	4,230	12.95
149	20,764	13	125	3.08	149	9	87	3.55	296	1,622	4.97
103	29,334	16	109	2.69	341	18	77	3.17	318	1,350	4.13
333	20,060	10	100	2.45	221	32	67	2.73	341	1,277	3.91
275	46,066	21	91	2.24	318	18	62	2.52	210	1,244	3.81
358	6,855	3	88	2.15	212	40	58	2.40	260	952	2.92
152	32,097	14	87	2.15	260	75	58	2.39	149	886	2.71
260	257,252	112	87	2.14	275	13	56	2.31	221	798	2.44
207	373,895	157	84	2.07	236	63	52	2.11	111	778	2.38
341	46,504	19	82	2.01	296	18	51	2.08	333	758	2.32
343	13,269	5	75	1.86	351	1	51	2.07	345	627	1.92
236	244,627	92	75	1.85	210	9	50	2.07	140	619	1.89
210	35,672	13	73	1.79	337	26	50	2.03	212	593	1.82
204	93,573	32	68	1.68	207	88	47	1.93	172	587	1.80
221	96,201	32	67	1.64	244	12	47	1.92	325	583	1.78
244	51,261	17	66	1.63	343	3	45	1.85	236	524	1.60
111	645,783	211	65	1.61	211	23	45	1.83	316	493	1.51
324	24,742	8	65	1.59	265	71	44	1.79	125	487	1.49
296	70,883	22	62	1.53	152	7	44	1.79	207	478	1.46
318	58,498	18	62	1.51	354	2	43	1.76	275	473	1.45
191	253,024	77	61	1.50	111	136	42	1.73	197	459	1.41
212	136,830	41	60	1.48	191	50	40	1.62	330	448	1.37
330	61,166	18	59	1.45	140	116	38	1.57	359	447	1.37
359	38,923	11	57	1.39	359	7	36	1.47	337	406	1.24
265	324,487	89	55	1.35	330	11	36	1.47	354	388	1.19
181	544,198	145	53	1.31	339	20	36	1.46	265	377	1.15
316	624,522	166	53	1.31	325	14	35	1.44	103	375	1.15

OSHA INCIDENCE RATE					INCIDENCE RATE - LWC				SEVERITY RATE		
IRIS USER NO.	MAN-HOURS EXPOSURE	NO. INJ	RATE	AVG RATIO	IRIS USER NO.	NO. INJ	RATE	AVG RATIO	IRIS USER NO.	RATE	AV RA
172	1,156,079	306	53	1.30	181	94	35	1.42	152	355	1.
171	520,193	137	53	1.30	338	16	34	1.41	171	346	1.
211	103,184	27	52	1.29	172	187	32	1.33	179	342	1.
140	605,234	157	52	1.28	316	101	32	1.33	AVG	327	1.
351	3,952	1	51	1.25	324	4	32	1.33	362	305	0.
325	79,633	20	50	1.24	350	3	32	1.31	181	303	0.
349	15,994	4	50	1.23	171	79	30	1.24	340	296	0.
337	104,994	26	50	1.22	333	3	30	1.23	211	283	0.
217	1,398,396	343	49	1.21	358	1	29	1.20	191	276	0.
235	182,933	42	46	1.13	346	4	29	1.19	338	265	0.
299	70,796	16	45	1.11	197	9	29	1.18	146	248	0.
329	27,602	6	43	1.07	237	20	27	1.12	201	245	0.
350	18,835	4	42	1.05	183	16	25	1.04	244	199	0.
161	212,353	44	41	1.02	125	216	25	1.02	339	195	0.
AVG	18,525,110	3763	41	1.00	AVG	2,260	24	1.00	204	192	0.
237	146,933	29	39	0.97	336	3	23	0.95	348	192	0.
283	124,183	24	39	0.95	109	135	23	0.93	170	171	0.
183	125,830	24	38	0.94	348	2	23	0.92	161	170	0.
109	1,187,955	220	37	0.91	261	2	22	0.91	109	170	0.
339	111,971	20	36	0.88	329	3	22	0.89	183	161	0.
197	62,279	11	35	0.87	161	20	19	0.77	115	160	0.
353	11,453	2	35	0.86	179	39	18	0.74	101	158	0.
338	92,894	16	34	0.85	170	53	18	0.73	299	158	0.
348	17,735	3	34	0.83	353	1	17	0.72	186	152	0.
355	36,440	6	33	0.81	204	8	17	0.70	272	138	0.
125	1,728,240	276	32	0.79	283	10	16	0.66	261	133	0.
179	429,380	68	32	0.78	115	11	15	0.62	133	131	0.
146	603,812	89	29	0.73	272	14	14	0.59	349	125	0.
346	27,509	4	29	0.72	157	7	14	0.59	237	123	0.
115	145,009	21	29	0.71	326	1	14	0.59	353	122	0.
340	153,635	22	29	0.70	295	15	13	0.52	217	122	0.
101	796,060	111	28	0.69	349	1	13	0.51	295	116	0.
113	14,483	2	28	0.68	217	87	12	0.51	215	107	0.
295	235,444	28	24	0.59	186	33	12	0.51	178	106	0.
272	194,635	23	24	0.58	133	2	12	0.51	351	101	0.
336	25,800	3	23	0.57	146	37	12	0.50	350	96	0.
186	530,683	61	23	0.57	344	1	11	0.47	136	95	0.
170	592,955	68	23	0.56	355	2	11	0.45	346	95	0.
361	17,596	2	23	0.56	235	10	11	0.45	343	90	0.
261	18,090	2	22	0.54	101	43	11	0.44	157	90	0.
347	29,770	3	20	0.50	340	8	10	0.43	324	89	0.
133	32,163	3	19	0.46	345	1	10	0.40	292	83	0.
178	292,032	27	18	0.46	178	14	10	0.39	344	80	0.
226	32,717	3	18	0.45	148	11	7	0.28	148	79	0.
148	322,170	28	17	0.43	347	1	7	0.28	283	76	0.
157	97,539	8	16	0.40	299	2	6	0.23	329	65	0.
326	13,957	1	14	0.35	215	3	6	0.23	336	62	0.
286	14,694	1	14	0.34	285	1	5	0.20	323	54	0.
182	207,998	12	12	0.28	182	5	5	0.20	235	48	0.

OSHA INCIDENCE RATE					INCIDENCE RATE - LWC				SEVERITY RATE		
IRIS USER NO.	MAN-HOURS EXPOSURE	NO. INJ	RATE	AVG RATIO	IRIS USER NO.	NO. INJ	RATE	AVG RATIO	IRIS USER NO.	RATE	AVG RATIO
344	17,415	1	11	0.28	292	11	5	0.19	326	29	0.09
345	20,745	1	10	0.24	136	5	4	0.18	242	25	0.08
363	20,911	1	10	0.24	362	1	4	0.17	182	22	0.07
323	96,442	4	8	0.20	323	2	4	0.17	347	20	0.06
201	49,828	2	8	0.20	201	1	4	0.16	355	16	0.05
292	485,076	18	7	0.18	242	3	2	0.10	285	10	0.03
215	106,872	3	6	0.14	363	0	0	0.00	363	0	0.00
136	222,554	6	5	0.13	361	0	0	0.00	361	0	0.00
285	39,991	1	5	0.12	331	0	0	0.00	331	0	0.00
362	47,261	1	4	0.10	328	0	0	0.00	328	0	0.00
242	252,099	3	2	0.06	286	0	0	0.00	286	0	0.00
331	27,266	0	0	0.00	226	0	0	0.00	226	0	0.00
328	4,547	0	0	0.00	113	0	0	0.00	113	0	0.00

AVERAGE WORKDAYS LOST PER LOST WORKDAY CASE BY 'IRIS' USERS RANKED FROM HIGHEST TO LOWEST

REPORTING PERIOD: DECEMBER 1975 - DECEMBER 1976

INSTRUCTIONS: FIND YOUR ORGANIZATION'S USER NUMBER AND COMPARE HOW IT RANKS WITH THE AVERAGE AND OTHER IRIS USERS.
A GOOD STANDING IS AN AVERAGE RATIO OF LESS THAN .50.
A POOR STANDING IS AN AVERAGE RATIO OF GREATER THAN 1.25.

RANK	IRIS USER NO.	NO. LOST WKDY CASES	OSHA DAYS LOST	AVG OSHA DAYS LOST	AVG RATIO (DAYS / AVG)
HIGHEST	358	1	145	145.00	10.83
2	362	1	72	72.00	5.38
3	345	1	65	65.00	4.85
4	201	1	61	61.00	4.55
5	296	18	575	31.94	2.38
6	340	8	227	28.37	2.12
7	299	2	56	28.00	2.09
8	333	3	76	25.33	1.89
9	210	9	222	24.67	1.84
10	318	18	395	21.94	1.64
11	136	5	106	21.20	1.58
12	146	37	748	20.22	1.51
13	125	216	4,209	19.49	1.45
14	215	3	57	19.00	1.42
15	179	39	735	18.85	1.41
16	111	136	2,511	18.46	1.38
17	292	11	202	18.36	1.37
18	172	187	3,393	18.14	1.35
19	325	14	232	16.57	1.24
20	341	18	297	16.50	1.23
21	260	75	1,225	16.33	1.22
22	197	9	143	15.89	1.19
23	316	101	1,541	15.26	1.14
24	101	43	630	14.65	1.09
	AVG	2,259	30,258	13.39	1.00
25	323	2	26	13.00	0.97
26	330	11	137	12.45	0.93
27	359	7	87	12.43	0.93
28	186	33	402	12.18	0.91
29	221	32	384	12.00	0.90
30	140	157	1,872	11.92	0.89
31	148	11	127	11.55	0.86
32	171	79	900	11.39	0.85
33	204	8	90	11.25	0.84
34	178	14	155	11.07	0.83
35	242	3	32	10.67	0.80
36	115	11	116	10.55	0.79

RANK	IRIS USER NO.	NO. LOST WKDY CASES	OSHA DAYS LOST	AVG OSHA DAYS LOST	AVG RATIO (DAYS / AVG)
37	133	2	21	10.50	0.78
38	149	9	92	10.22	0.76
39	236	63	641	10.17	0.76
40	212	40	406	10.15	0.76
41	207	88	893	10.15	0.76
42	349	1	10	10.00	0.75
43	217	86	851	9.90	0.74
44	170	53	508	9.58	0.72
45	272	14	134	9.57	0.71
46	295	15	136	9.07	0.68
47	161	20	181	9.05	0.68
48	354	2	18	9.00	0.67
49	181	94	825	8.78	0.66
50	265	71	612	8.62	0.64
51	348	2	17	8.50	0.63
52	275	13	109	8.38	0.63
53	337	26	213	8.19	0.61
54	152	7	57	8.14	0.61
55	338	16	123	7.69	0.57
56	109	135	1,007	7.46	0.56
57	353	1	7	7.00	0.52
58	344	1	7	7.00	0.52
59	191	50	349	6.98	0.52
60	211	23	146	6.35	0.47
61	183	16	101	6.31	0.47
62	157	7	44	6.29	0.47
63	261	2	12	6.00	0.45
64	339	20	109	5.45	0.41
65	283	10	47	4.70	0.35
66	182	5	23	4.60	0.34
67	237	20	90	4.50	0.34
68	235	10	44	4.40	0.33
69	244	12	51	4.25	0.32
70	103	16	55	3.44	0.26
71	346	4	13	3.25	0.24
72	350	3	9	3.00	0.22
73	347	1	3	3.00	0.22
74	329	3	9	3.00	0.22
75	324	4	11	2.75	0.21
76	336	3	8	2.67	0.20
77	351	1	2	2.00	0.15
78	343	3	6	2.00	0.15
79	326	1	2	2.00	0.15
80	285	1	2	2.00	0.15
LOWEST	355	2	3	1.50	0.11

DIRECT COSTS BY 'IRIS' USERS
RANKED FROM HIGHEST TO LOWEST

REPORTING PERIOD: DECEMBER 1975 - DECEMBER 1976

DEFINITIONS: DIRECT COSTS INCLUDE MEDICAL EXPENSES, WORKMEN'S COMPENSATION BENEFITS, AND WAGE CONTINUATION BENEFITS (E.G. INJURY LEAVE) ONLY. INDIRECT COSTS ARE NOT INCLUDED. DIRECT COSTS PER MAN-YEAR IS THE COST PER FULL-TIME SANITATION EMPLOYEE PER YEAR BASED ON 2,000 HOURS PER YEAR.

INSTRUCTIONS: FIND YOUR ORGANIZATION'S USER NUMBER AND COMPARE HOW IT RANKS WITH THE AVERAGE AND OTHER IRIS USERS.
A GOOD STANDING IS AN AVERAGE RATIO OF LESS THAN .50.
A POOR STANDING IS AN AVERAGE RATIO OF GREATER THAN 1.25.

AVG DIRECT COST/OSHA RECORDABLE INJ

IRIS USER NO.	NO. OSHA RECORD INJ	AVG COST	AVG RATIO (AVG COST/AVG)
197	11	4,171	10.04
242	3	2,385	5.74
362	1	1,934	4.65
345	1	1,670	4.02
215	3	1,615	3.89
296	22	1,386	3.34
358	3	1,317	3.17
201	2	1,285	3.09
210	13	1,057	2.54
318	18	1,011	2.43
341	19	770	1.85
337	26	734	1.77
212	41	727	1.75
338	16	712	1.71
140	157	696	1.68
136	6	680	1.64
111	211	646	1.56
325	20	621	1.49
261	2	559	1.35
172	306	550	1.32
125	276	530	1.28
292	18	504	1.21
340	22	491	1.18
339	20	470	1.13
316	166	469	1.13
221	32	461	1.11
179	68	433	1.04
AVG	3,763	415	1.00
348	3	390	0.94
265	89	387	0.93

DIRECT COST PER MAN YEAR

IRIS USER NO.	MAN-HRS EXPOSURE	COSTS PER M-Y	AVG RATIO (COSTS/AVG)
197	62,279	1,474	8.70
358	6,855	1,153	6.81
296	70,883	860	5.08
210	35,672	770	4.55
341	46,504	633	3.74
318	58,498	626	3.70
212	136,830	436	2.57
111	645,783	423	2.50
337	104,994	364	2.15
140	605,234	362	2.14
221	96,201	315	1.86
325	79,633	313	1.85
172	1,156,079	291	1.72
149	20,764	286	1.69
260	257,252	268	1.58
236	244,627	264	1.56
354	9,289	257	1.52
316	624,522	249	1.47
103	29,334	247	1.46
338	92,894	245	1.45
333	20,060	226	1.33
265	324,487	213	1.26
152	32,097	210	1.24
207	373,895	200	1.18
217	1,398,396	181	1.07
AVG	18,525,110	169	1.00
125	1,728,240	169	1.00
339	111,971	168	0.99
345	20,745	161	0.95
181	544,198	153	0.91

VG DIRECT COST/OSHA RECORDABLE INJ				DIRECT COST PER MAN YEAR			
RIS SER NO.	NO. OSHA RECORD INJ	AVG COST	AVG RATIO (AVG COST/AVG)	IRIS USER NO.	MAN-HRS EXPOSURE	COSTS PER M-Y	AVG RATIO (COSTS/AVG)
157	8	372	0.90	171	520,193	152	0.90
217	343	366	0.88	330	61,166	142	0.84
101	111	365	0.88	340	153,635	141	0.83
236	92	350	0.84	179	429,380	137	0.81
344	1	318	0.77	348	17,735	132	0.78
170	68	316	0.76	275	46,066	131	0.77
183	24	312	0.75	244	51,261	130	0.76
260	112	307	0.74	261	18,090	124	0.73
115	21	301	0.73	343	13,269	120	0.71
171	137	287	0.69	183	125,830	119	0.70
181	145	286	0.69	204	93,573	116	0.69
109	220	284	0.68	211	103,184	113	0.67
295	28	282	0.68	109	1,187,955	107	0.63
146	89	273	0.66	359	38,923	106	0.63
178	27	263	0.63	201	49,828	103	0.61
186	61	259	0.62	101	796,060	103	0.61
330	18	241	0.58	349	15,994	91	0.54
152	14	240	0.58	215	106,872	91	0.54
207	157	237	0.57	115	145,009	87	0.52
149	13	228	0.55	362	47,261	82	0.48
333	10	226	0.55	146	603,812	81	0.48
133	3	212	0.51	237	146,933	81	0.48
211	27	209	0.50	170	592,955	73	0.43
148	28	206	0.50	191	253,024	71	0.42
323	4	205	0.49	161	212,353	71	0.42
103	16	203	0.49	295	235,444	67	0.40
272	23	201	0.49	157	97,539	61	0.36
354	6	198	0.48	186	530,683	60	0.35
237	29	198	0.48	283	124,183	57	0.34
244	17	195	0.47	299	70,796	57	0.34
359	11	187	0.45	242	252,099	57	0.34
349	4	182	0.44	329	27,602	53	0.31
204	32	170	0.41	324	24,742	52	0.31
161	44	168	0.40	178	292,032	49	0.29
343	5	158	0.38	272	194,635	48	0.28
346	4	154	0.37	346	27,509	45	0.27
283	24	146	0.35	350	18,835	42	0.25
275	21	143	0.34	353	11,453	42	0.25
299	16	125	0.30	133	32,163	40	0.23
353	2	119	0.29	292	485,076	37	0.22
191	77	116	0.28	136	222,554	37	0.22
329	6	110	0.27	344	17,415	37	0.22
347	3	110	0.27	148	322,170	36	0.21
350	4	98	0.24	235	182,933	33	0.20
326	1	91	0.22	351	3,952	32	0.19
182	12	82	0.20	347	29,770	22	0.13
324	8	80	0.19	323	96,442	19	0.11

AVG DIRECT COST/OSHA RECORDABLE INJ				DIRECT COST PER MAN YEAR			
IRIS USER NO.	NO. OSHA RECORD INJ	AVG COST	AVG RATIO (AVG COST/AVG)	IRIS USER NO.	MAN-HRS EXPOSURE	COSTS PER M-Y	AVG RATIO (COSTS/AVG)
286	1	80	0.19	113	14,483	14	0.08
235	42	72	0.17	326	13,957	13	0.08
351	1	64	0.15	286	14,694	11	0.06
285	1	61	0.15	182	207,998	10	0.06
113	2	51	0.12	355	36,440	9	0.05
363	1	31	0.07	336	25,800	5	0.03
355	6	27	0.07	361	17,596	5	0.03
361	2	20	0.05	226	32,717	4	0.02
336	3	20	0.05	285	39,991	3	0.02
226	3	20	0.05	363	20,911	3	0.02

DIRECT COSTS FOR LOST DAY CASES BY 'IRIS' USERS RANKED FROM HIGHEST TO LOWEST

REPORTING PERIOD: DECEMBER 1975 - DECEMBER 1976

DEFINITIONS: DIRECT COSTS INCLUDE MEDICAL EXPENSES, WORKMEN'S COMPENSATION BENEFITS, AND WAGE CONTINUATION BENEFITS (E.G. INJURY LEAVE) ONLY. INDIRECT COSTS ARE NOT INCLUDED.

INSTRUCTIONS: FIND YOUR ORGANIZATION'S USER NUMBER AND COMPARE HOW IT RANKS WITH THE AVERAGE AND OTHER IRIS USERS.

IRIS USER NO.	NO. LOST DAY CASES	TOTAL COST	AVG COST/ LOST DAY CASE
197	9	45,829	5,092
358	1	3,603	3,603
201	1	2,514	2,514
242	3	7,155	2,385
362	1	1,934	1,934
296	18	30,345	1,686
345	1	1,670	1,670
215	3	4,846	1,615
210	9	13,615	1,513
340	8	10,343	1,293
318	18	18,214	1,012
111	136	131,959	970
140	116	107,012	923
101	43	38,236	889
325	14	12,187	871
172	187	161,286	862
341	18	14,609	812
292	11	8,919	811
136	5	4,052	810
299	2	1,591	796
316	101	76,396	756
212	40	29,792	745
337	26	19,106	735
338	16	11,399	712
179	39	27,667	709
333	3	2,025	675
125	216	142,931	662
AVG	2,259	1,438,324	637
217	86	53,947	627
146	37	21,723	587
261	2	1,119	560
204	8	4,441	555
348	2	1,102	551
349	1	519	519
115	11	5,566	506
354	2	985	493
236	63	31,027	492

IRIS USER NO.	NO. LOST DAY CASES	TOTAL COST	AVG COST/ LOST DAY CASE
295	15	7,233	482
178	14	6,697	478
265	71	33,883	477
171	79	37,555	475
339	20	9,417	471
221	32	14,765	461
186	33	15,021	455
148	11	4,873	443
183	16	7,068	442
260	75	32,828	438
109	135	58,679	435
181	94	40,094	427
152	7	2,972	425
157	7	2,941	420
170	53	20,845	393
207	88	34,366	391
330	11	4,195	381
323	2	754	377
161	20	6,705	335
149	9	2,892	321
344	1	318	318
272	14	4,451	318
133	2	618	309
283	10	2,889	289
359	7	1,918	274
237	20	5,370	269
244	12	3,164	264
347	1	252	252
343	3	732	244
211	23	5,405	235
353	1	224	224
275	13	2,759	212
103	16	3,252	203
235	10	1,833	183
182	5	852	170
191	50	8,435	169
329	3	499	166
346	4	619	155
324	4	540	135
350	3	366	122
326	1	91	91
351	1	64	64
285	1	61	61
355	2	105	53
336	3	60	20

ALL USERS
ACTIVITIES RANKED FROM HIGHEST TO LOWEST
PERCENT OF OSHA RECORDABLE INJURIES

REPORTING PERIOD: DECEMBER 1975 - DECEMBER 1976

DEFINITIONS: OSHA RECORDABLE CASES INCLUDE MEDICAL TREATMENT CASES (I.E. NON-FATAL CASES WITHOUT LOST WORKDAYS), LOST WORKDAY, PERMANENT DISABILITY AND FATAL CASES. FIRST AID INJURIES ARE NOT INCLUDED.

ACTIVITY	OSHA RECORDABLE INJURIES NO.	%
LIFTING CONTAINER	563	14.96
DUMPING CONTAINER	455	12.09
LIFTING TO DUMP CONTAINER	386	10.26
GETTING OFF EQUIP	299	7.95
STANDING OR WALKING	269	7.15
CARRYING CONTAINER	266	7.07
RIDING ON EQUIP	235	6.25
PUSHING OR PULLING CONTAINER	152	4.04
LIFTING TO DUMP WASTE	146	3.88
DRIVING EQUIP	120	3.19
GETTING ON EQUIP	111	2.95
DOING REPETITIOUS WORK	61	1.62
LIFTING WASTE	55	1.46
OPERATING CONTROLS	55	1.46
DOING OTHER TYPE OF ACTIVITY	50	1.33
REPAIRING EQUIP W HANDTOOL	41	1.09
CLEARING WASTE W HANDTOOL	38	1.01
OPENING EQUIP PT	36	0.96
DOING NO ONE ACTIVITY	33	0.88
REFUELING VEH OR ROUTINE MAINT	32	0.85
DUMPING WASTE	25	0.66
PICKING UP LOOSE WASTE	25	0.66
EMPTYING VEH	24	0.64
DOING UNK ACTIVITY	22	0.58
CLOSING EQUIP PT	19	0.50
CHECKING EQUIP MALFNCTN	19	0.50
DIRECTING VEH	16	0.43
PUSHING OR PULLING WASTE	15	0.40
TRIMMING SHRUBBERY	15	0.40
CARRYING WASTE	13	0.35
DISLODGING WASTE FROM VEH	13	0.35
LIFTING OBJECT	11	0.29
HOOKING OR UNHOOKING EQUIP	11	0.29
DISLODGING WASTE FROM CONT	10	0.27
COMPACTING WASTE IN CONT	10	0.27
WASHING EQUIP	10	0.27
RUNNING	10	0.27
CARRYING OBJECT	8	0.21

OSHA RECORDABLE INJURIES

ACTIVITY	NO.	%
CATCHING CONT	8	0.21
DOING JANITORIAL WORK	8	0.21
PUSHING OR PULLING VEH PT	7	0.19
PUSHING OR PULLING OBJECT	7	0.19
COMPACTING WASTE IN VEH	7	0.19
REPAIRING CONT W HANDTOOL	7	0.19
UNLOADING WASTE	7	0.19
LIFTING VEH PART	5	0.13
CATCHING WASTE	5	0.13
ARRANGING LOAD	5	0.13
SHAKING TO DUMP CONT	4	0.11
HOOKING OR UNHOOKING CONT	4	0.11
MOWING	4	0.11
WASHING CONT	2	0.05
DOING HORSEPLAY	2	0.05
RIDING ON CONT	1	0.03
FIGHTING	1	0.03
TOTAL	3,763	100.00

ALL USERS
ACTIVITIES RANKED FROM HIGHEST TO LOWEST
PERCENT OF OSHA DAYS LOST

REPORTING PERIOD: DECEMBER 1975 - DECEMBER 1976

DEFINITIONS: A LOST DAYS CASE IS ONE IN WHICH THE EMPLOYEE INCURRED WORKDAYS LOST AND/OR LIGHT DUTY DAYS DUE TO THE ACCIDENT.

ACTIVITY	OSHA DAYS LOST NO.	%	AVG DAYS LOST/ LOST DAYS CASE
LIFTING CONTAINER	4,185	13.83	10.59
LIFTING TO DUMP CONTAINER	3,009	9.94	13.37
RIDING ON EQUIP	2,758	9.11	18.76
GETTING OFF EQUIP	2,701	8.93	13.31
DUMPING CONTAINER	2,667	8.81	11.11
CARRYING CONTAINER	2,271	7.51	12.69
STANDING OR WALKING	2,065	6.82	12.91
PUSHING OR PULLING CONTAINER	1,891	6.25	17.51
DRIVING EQUIP	1,097	3.63	13.89
GETTING ON EQUIP	935	3.09	12.81
DOING REPETITIOUS WORK	845	2.79	17.60
LIFTING TO DUMP WASTE	751	2.48	13.91
DOING OTHER TYPE OF ACTIVITY	492	1.63	20.50
OPENING EQUIP PT	382	1.26	20.11
PUSHING OR PULLING WASTE	365	1.21	40.56
TRIMMING SHRUBBERY	348	1.15	34.80
OPERATING CONTROLS	341	1.13	11.37
EMPTYING VEH	325	1.07	29.55
CLEARING WASTE W HANDTOOL	284	0.94	14.95
DIRECTING VEH	194	0.64	19.40
ARRANGING LOAD	175	0.58	43.75
LIFTING OBJECT	167	0.55	33.40
LIFTING WASTE	163	0.54	8.58
REPAIRING EQUIP W HANDTOOL	151	0.50	8.39
PICKING UP LOOSE WASTE	141	0.47	10.85
COMPACTING WASTE IN VEH	122	0.40	20.33
DUMPING WASTE	120	0.40	10.91
CLOSING EQUIP PT	107	0.35	13.37
CARRYING OBJECT	100	0.33	20.00
CARRYING WASTE	100	0.33	14.29
REFUELING VEH OR ROUTINE MAINT	99	0.33	6.19
CATCHING WASTE	98	0.32	24.50
HOOKING OR UNHOOKING EQUIP	90	0.30	18.00
PUSHING OR PULLING OBJECT	87	0.29	17.40
DOING UNK ACTIVITY	87	0.29	9.67
MOWING	75	0.25	18.75
DOING NO ONE ACTIVITY	63	0.21	4.20
WASHING EQUIP	51	0.17	8.50

OSHA DAYS LOST

ACTIVITY	NO.	%	AVG DAYS LOST/ LOST DAYS CASE
PUSHING OR PULLING VEH PT	50	0.17	12.50
CHECKING EQUIP MALFNCTN	50	0.17	5.56
RUNNING	35	0.12	7.00
LIFTING VEH PART	33	0.11	6.60
CATCHING CONT	33	0.11	6.60
DOING JANITORIAL WORK	33	0.11	16.50
DISLODGING WASTE FROM VEH	31	0.10	5.17
DOING HORSEPLAY	29	0.10	14.50
SHAKING TO DUMP CONT	18	0.06	6.00
DISLODGING WASTE FROM CONT	12	0.04	6.00
COMPACTING WASTE IN CONT	11	0.04	2.20
HOOKING OR UNHOOKING CONT	7	0.02	3.50
REPAIRING CONT W HANDTOOL	5	0.02	2.50
FIGHTING	4	0.01	4.00
UNLOADING WASTE	3	0.01	3.00
RIDING ON CONT	1	0.00	1.00
WASHING CONT	1	0.00	1.00
TOTAL	30,258	100.00	13.39

ALL USERS
ACTIVITIES RANKED FROM HIGHEST TO LOWEST
PERCENT OF DIRECT COSTS

REPORTING PERIOD: DECEMBER 1975 - DECEMBER 1976

DEFINITIONS: OSHA RECORDABLE CASES INCLUDE MEDICAL TREATMENT CASES (I.E. NON-FATAL CASES WITHOUT LOST WORKDAYS), AND LOST WORKDAY, PERMANENT DISABILITY AND FATALITY CASES.
FIRST AID INJURIES ARE NOT INCLUDED.
DIRECT COSTS INCLUDE MEDICAL EXPENSES, WORKER'S COMPENSATION BENEFITS AND WAGE CONTINUATION BENEFITS (E.G., INJURY LEAVE) ONLY. INDIRECT COSTS ARE NOT INCLUDED.

ACTIVITY	DIRECT COSTS AMT.	%	AVG COSTS/ OSHA REC INJ
LIFTING CONTAINER	205,193	13.12	364
RIDING ON EQUIP	161,281	10.31	686
LIFTING TO DUMP CONTAINER	121,961	7.80	316
DUMPING CONTAINER	118,870	7.60	261
STANDING OR WALKING	114,373	7.31	425
GETTING OFF EQUIP	114,160	7.30	382
CARRYING CONTAINER	102,056	6.53	384
PUSHING OR PULLING CONTAINER	84,331	5.39	555
DRIVING EQUIP	59,890	3.83	499
DISLODGING WASTE FROM VEH	59,441	3.80	4,572
OPENING EQUIP PT	57,137	3.65	1,587
DOING REPETITIOUS WORK	45,231	2.89	741
GETTING ON EQUIP	41,017	2.62	370
LIFTING TO DUMP WASTE	37,775	2.42	259
DOING OTHER TYPE OF ACTIVITY	33,619	2.15	672
OPERATING CONTROLS	25,099	1.60	456
PUSHING OR PULLING WASTE	18,964	1.21	1,264
EMPTYING VEH	16,828	1.08	701
ARRANGING LOAD	11,358	0.73	2,272
LIFTING WASTE	9,935	0.64	181
CLEARING WASTE W HANDTOOL	9,734	0.62	256
LIFTING OBJECT	8,448	0.54	768
DUMPING WASTE	8,213	0.53	329
PICKING UP LOOSE WASTE	7,845	0.50	314
REPAIRING EQUIP W HANDTOOL	7,531	0.48	184
COMPACTING WASTE IN VEH	7,517	0.48	1,074
REFUELING VEH OR ROUTINE MAINT	6,471	0.41	202
DIRECTING VEH	6,227	0.40	389
CARRYING OBJECT	5,965	0.38	46
HOOKING OR UNHOOKING EQUIP	5,250	0.34	477
CLOSING EQUIP PT	5,215	0.33	274
TRIMMING SHRUBBERY	4,891	0.31	326
CARRYING WASTE	4,745	0.30	365
DOING NO ONE ACTIVITY	3,852	0.25	117
PUSHING OR PULLING OBJECT	3,798	0.24	543
DOING UNK ACTIVITY	3,773	0.24	172

DIRECT COSTS

ACTIVITY	AMT.	%	AVG COSTS/ OSHA REC INJ
PUSHING OR PULLING VEH PT	3,345	0.21	478
CATCHING WASTE	3,042	0.19	608
CHECKING EQUIP MALFNCTN	3,026	0.19	159
WASHING EQUIP	2,184	0.14	218
MOWING	1,748	0.11	437
LIFTING VEH PART	1,653	0.11	331
DOING JANITORIAL WORK	1,620	0.10	203
SHAKING TO DUMP CONT	1,612	0.10	403
RUNNING	1,445	0.09	145
CATCHING CONT	1,405	0.09	176
DOING HORSEPLAY	1,054	0.07	527
DISLODGING WASTE FROM CONT	1,009	0.06	101
COMPACTING WASTE IN CONT	782	0.05	78
HOOKING OR UNHOOKING CONT	576	0.04	144
UNLOADING WASTE	524	0.03	75
REPAIRING CONT W HANDTOOL	459	0.03	66
FIGHTING	184	0.01	184
RIDING ON CONT	144	0.01	144
WASHING CONT	83	0.01	42
TOTAL	1,563,888	100.00	416

FIGURE 11

ALL USERS
ACCIDENT TYPES RANKED FROM HIGHEST TO LOWEST
PERCENT OF OSHA RECORDABLE INJURIES

REPORTING PERIOD: DECEMBER 1975 - DECEMBER 1976

DEFINITIONS: OSHA RECORDABLE CASES INCLUDE MEDICAL TREATMENT CASES (I.E. NON-FATAL CASES WITHOUT LOST WORKDAYS), LOST WORKDAY, PERMANENT DISABILITY AND FATAL CASES. FIRST AID INJURIES ARE NOT INCLUDED.

ACCIDENT TYPE	OSHA RECORDABLE INJURIES NO.	%
OVEREXERTION INVOLVING CONT	671	17.83
SLIP ON SAME LEVEL	221	5.87
STRUCK BY WASTE	213	5.66
VEHICLE ACCIDENT	172	4.57
FALL ON SAME LEVEL	171	4.54
STRUCK SELF WITH CONT BEING HANDLED	161	4.28
FALL TO A DIFFERENT LEVEL	155	4.12
STRUCK AGAINST VEH PART	149	3.96
CAUGHT BETWEEN OBJECTS	149	3.96
WASTE PARTICLES IN EYE	111	2.95
VEH MOVEMENT INVOLVED ACCIDENT	109	2.90
HURT BY HANDLING CONT	99	2.63
BODILY REACTION	95	2.52
ANIMAL BITE	83	2.21
SLIP AND STRUCK AGAINST VEH PART	82	2.18
INSECT BITE	77	2.05
PARTICLES IN EYE	70	1.86
STEPPED ON SHARP WASTE	69	1.83
STRUCK BY VEH PART	52	1.38
HURT BY HANDLING WASTE	52	1.38
OVEREXERTION	51	1.36
STRUCK BY OBJ	50	1.33
SLIP TO A DIFFERENT LEVEL	48	1.28
STRUCK BY CONTAINER	47	1.25
OVEREXERTION INVOLVING WASTE	44	1.17
STRUCK SELF WITH WASTE BEING HANDLED	43	1.14
BODILY REACTION IN CATCHING CONT	40	1.06
STEPPED ON SHARP OBJ	40	1.06
FALL AGAINST VEH PART	35	0.93
STRUCK AGAINST OBJECT	33	0.88
CONTACT WITH CAUSTIC OR TOXIC SUBSTANCE	33	0.88
CONTACT WITH ALLERGENIC WASTE	31	0.82
OVEREXERTION INVOLVING OBJ	29	0.77
OVEREXERTION INVOLVING VEH PART	27	0.72
STRUCK SELF WITH OBJ BEING HANDLED	24	0.64
STRUCK AGAINST WASTE	20	0.53
STRUCK AGAINST CONTAINER	19	0.50
DEVELOPED INJURY OVER TIME	18	0.48
UNKNOWN ACCIDENT TYPE	18	0.48
OTHER ACCIDENT TYPE	14	0.37

OSHA RECORDABLE INJURIES

ACCIDENT TYPE	NO.	%
STRUCK SELF WITH VEH PT BEING HANDLED	13	0.35
CONTACT WITH CAUSTIC OR TOXIC WASTE	11	0.29
EXPOSURE TO WEATHER EXTREMES	11	0.29
FALL AGAINST CONT	10	0.27
BODILY REACTION IN AVOIDING OBJ	10	0.27
HURT BY HANDLING VEH PART	9	0.24
SLIP AND STRUCK AGAINST CONT	9	0.24
RESULT OF AGGRESSIVE ACT	9	0.24
CONTACT WITH HOT SUBSTANCE	8	0.21
HURT BY HANDLING OBJ	6	0.16
FALL AGAINST OBJ	5	0.13
SLIP AND STRUCK AGAINST OBJ	5	0.13
CONTACT WITH ALLERGENIC SUBSTANCE	5	0.13
CONTACT WITH HOT VEH PART	5	0.13
BODILY REACTION IN CATCHING VEH	4	0.11
BODILY REACTION IN CATCHING OBJ	4	0.11
BODILY REACTION IN CATCHING WASTE	4	0.11
CONTACT WITH HOT OBJ	4	0.11
BODILY REACTION IN AVOIDING VEH	3	0.08
BODILY REACTION IN AVOIDING CONT	1	0.03
BODILY REACTION IN AVOIDING WASTE	1	0.03
FLASHBURN	1	0.03
TOTAL	3,763	100.00

ALL USERS
ACCIDENT TYPES RANKED FROM HIGHEST TO LOWEST
PERCENT OF OSHA DAYS LOST

REPORTION PERIOD: DECEMBER 1975 - DECEMBER 1976

DEFINITIONS: A LOST DAYS CASE IS ONE IN WHICH THE EMPLOYEE INCURRED WORKDAYS LOST AND/OR LIGHT DUTY DAYS DUE TO THE ACCIDENT.

ACCIDENT TYPE	OSHA DAYS LOST NO.	%	AVG DAYS LOST/ LOST DAYS CASE
OVEREXERTION INVOLVING CONT	6,821	22.54	12.97
VEHICLE ACCIDENT	2,839	9.38	22.01
CAUGHT BETWEEN OBJECTS	2,215	7.32	23.56
FALL TO A DIFFERENT LEVEL	2,211	7.31	19.39
SLIP ON SAME LEVEL	2,127	7.03	13.21
FALL ON SAME LEVEL	1,437	4.75	11.98
VEH MOVEMENT INVOLVED ACCIDENT	1,232	4.07	16.65
BODILY REACTION	823	2.72	12.66
STRUCK SELF WITH CONT BEING HANDLED	786	2.60	8.93
SLIP TO A DIFFERENT LEVEL	754	2.49	19.33
HURT BY HANDLING CONT	735	2.43	17.09
OVEREXERTION	705	2.33	17.20
OVEREXERTION INVOLVING WASTE	701	2.32	22.61
STRUCK BY WASTE	670	2.21	7.28
STRUCK AGAINST VEH PART	605	2.00	8.07
STRUCK BY VEH PART	585	1.93	18.87
SLIP AND STRUCK AGAINST VEH PART	567	1.87	10.90
BODILY REACTION IN CATCHING CONT	437	1.44	13.24
OVEREXERTION INVOLVING OBJ	434	1.43	25.53
OVEREXERTION INVOLVING VEH PART	378	1.25	18.90
FALL AGAINST VEH PART	356	1.18	13.19
STRUCK BY CONTAINER	237	0.78	7.41
FALL AGAINST CONT	214	0.71	35.67
BODILY REACTION IN AVOIDING OBJ	189	0.62	23.62
STEPPED ON SHARP WASTE	188	0.62	6.71
DEVELOPED INJURY OVER TIME	158	0.52	12.15
SLIP AND STRUCK AGAINST CONT	129	0.43	18.43
BODILY REACTION IN CATCHING WASTE	125	0.41	41.67
STRUCK SELF WITH WASTE BEING HANDLED	119	0.39	7.44
STRUCK AGAINST OBJECT	106	0.35	6.62
OTHER ACCIDENT TYPE	106	0.35	17.67
PARTICLES IN EYE	97	0.32	3.46
UNKNOWN ACCIDENT TYPE	88	0.29	14.67
STRUCK BY OBJ	85	0.28	3.54
CONTACT WITH ALLERGENIC WASTE	84	0.28	6.00
HURT BY HANDLING WASTE	81	0.27	8.10
WASTE PARTICLES IN EYE	79	0.26	2.55
EXPOSURE TO WEATHER EXTREMES	74	0.24	10.57
CONTACT WITH CAUSTIC OR TOXIC SUBSTANCE	64	0.21	3.56
CONTACT WITH HOT OBJ	63	0.21	21.00
ANIMAL BITE	63	0.21	3.32
RESULT OF AGGRESSIVE ACT	61	0.20	10.17

OSHA DAYS LOST

ACCIDENT TYPE	NO.	%	AVG DAYS LOST LOST DAYS CAS
BODILY REACTION IN CATCHING OBJ	59	0.19	14.75
STEPPED ON SHARP OBJ	48	0.16	3.20
INSECT BITE	44	0.15	2.93
CONTACT WITH CAUSTIC OR TOXIC WASTE	42	0.14	8.40
STRUCK AGAINST WASTE	35	0.12	4.37
HURT BY HANDLING OBJ	31	0.10	10.33
STRUCK AGAINST CONTAINER	30	0.10	3.75
CONTACT WITH HOT SUBSTANCE	29	0.10	4.83
BODILY REACTION IN CATCHING VEH	21	0.07	7.00
HURT BY HANDLING VEH PART	18	0.06	6.00
STRUCK SELF WITH OBJ BEING HANDLED	17	0.06	2.43
FALL AGAINST OBJ	16	0.05	5.33
BODILY REACTION IN AVOIDING VEH	15	0.05	7.50
SLIP AND STRUCK AGAINST OBJ	12	0.04	6.00
CONTACT WITH HOT VEH PART	10	0.03	10.00
CONTACT WITH ALLERGENIC SUBSTANCE	3	0.01	3.00
TOTAL	30,258	100.00	13.39

FIGURE 13

ALL USERS
ACCIDENT TYPES RANKED FROM HIGHEST TO LOWEST
PERCENT OF DIRECT COSTS

REPORTING PERIOD: DECEMBER 1975 - DECEMBER 1976

DEFINITIONS: OSHA RECORDABLE CASES INCLUDE MEDICAL TREATMENT CASES (I.E. NON-FATAL CASES WITHOUT LOST WORKDAYS), AND LOST WORKDAY, PERMANENT DISABILITY AND FATAL CASES. FIRST AID INJURIES ARE NOT INCLUDED. DIRECT COSTS INCLUDE MEDICAL EXPENSES, WORKER'S COMPENSATION BENEFITS AND WAGE CONTINUATION BENEFITS (E.G., INJURY LEAVE) ONLY. INDIRECT COSTS ARE NOT INCLUDED.

ACCIDENT TYPE	DIRECT COSTS AMOUNT	%	AVG COSTS/ OSHA REC INJ
OVEREXERTION INVOLVING CONT	307,748	19.68	459
CAUGHT BETWEEN OBJECTS	171,474	10.96	1,151
VEHICLE ACCIDENT	166,210	10.63	966
FALL TO A DIFFERENT LEVEL	102,685	6.57	662
SLIP ON SAME LEVEL	90,239	5.77	408
FALL ON SAME LEVEL	72,282	4.62	423
STRUCK BY VEH PART	62,952	4.03	1,211
VEH MOVEMENT INVOLVED ACCIDENT	55,300	3.54	507
STRUCK SELF WITH CONT BEING HANDLED	45,318	2.90	281
STRUCK BY WASTE	43,180	2.76	203
OVEREXERTION	38,406	2.46	753
SLIP TO A DIFFERENT LEVEL	32,725	2.09	682
BODILY REACTION	32,108	2.05	338
STRUCK AGAINST VEH PART	31,138	1.99	209
HURT BY HANDLING CONT	24,447	1.56	247
OVEREXERTION INVOLVING WASTE	22,922	1.47	521
SLIP AND STRUCK AGAINST VEH PART	22,801	1.46	278
OVEREXERTION INVOLVING VEH PART	20,335	1.30	753
BODILY REACTION IN CATCHING CONT	19,675	1.26	492
FALL AGAINST CONT	16,350	1.05	1,635
FALL AGAINST VEH PART	14,625	0.94	418
STEPPED ON SHARP WASTE	14,296	0.91	207
OVEREXERTION INVOLVING OBJ	14,180	0.91	489
STRUCK AGAINST OBJECT	11,897	0.76	361
WASTE PARTICLES IN EYE	8,845	0.57	80
BODILY REACTION IN AVOIDING OBJ	8,785	0.56	879
DEVELOPED INJURY OVER TIME	8,024	0.51	446
BODILY REACTION IN CATCHING WASTE	7,411	0.47	1,853
STRUCK BY CONTAINER	7,325	0.47	156
STRUCK BY OBJ	6,624	0.42	132
ANIMAL BITE	6,433	0.41	78
HURT BY HANDLING WASTE	6,278	0.40	121
OTHER ACCIDENT TYPE	6,265	0.40	448
SLIP AND STRUCK AGAINST CONT	6,139	0.39	682
PARTICLES IN EYE	5,214	0.33	74
CONTACT WITH CAUSTIC OR TOXIC SUBSTANCE	4,699	0.30	142

DIRECT COSTS

ACCIDENT TYPE	AMOUNT	%	AVG COSTS/ OSHA REC INJ
INSECT BITE	4,415	0.28	57
UNKNOWN ACCIDENT TYPE	4,394	0.28	244
STRUCK SELF WITH WASTE BEING HANDLED	4,380	0.28	102
EXPOSURE TO WEATHER EXTREMES	3,977	0.25	362
CONTACT WITH ALLERGENIC WASTE	3,483	0.22	112
STEPPED ON SHARP OBJ	3,086	0.20	77
BODILY REACTION IN CATCHING OBJ	2,848	0.18	712
CONTACT WITH HOT OBJ	2,790	0.18	698
RESULT OF AGGRESSIVE ACT	2,511	0.16	279
STRUCK AGAINST WASTE	2,242	0.14	112
STRUCK AGAINST CONTAINER	1,980	0.13	104
STRUCK SELF WITH OBJ BEING HANDLED	1,858	0.12	77
CONTACT WITH CAUSTIC OR TOXIC WASTE	1,810	0.12	165
HURT BY HANDLING VEH PART	1,617	0.10	180
HURT BY HANDLING OBJ	1,466	0.09	244
BODILY REACTION IN CATCHING VEH	1,135	0.07	284
FALL AGAINST OBJ	1,092	0.07	218
CONTACT WITH HOT SUBSTANCE	879	0.06	110
STRUCK SELF WITH VEH PT BEING HANDLED	654	0.04	50
SLIP AND STRUCK AGAINST OBJ	556	0.04	111
BODILY REACTION IN AVOIDING VEH	532	0.03	177
CONTACT WITH HOT VEH PART	331	0.02	66
CONTACT WITH ALLERGENIC SUBSTANCE	310	0.02	62
BODILY REACTION IN AVOIDING CONT	176	0.01	176
FLASHBURN	25	0.00	25
BODILY REACTION IN AVOIDING WASTE	8	0.00	8
TOTAL	1,563,888	100.00	416

FIGURE 14

ALL USERS
ACCIDENT SITES RANKED FROM HIGHEST TO LOWEST
PERCENT OF OSHA RECORDABLE INJURIES

REPORTING PERIOD: DECEMBER 1975 - DECEMBER 1976

DEFINITIONS: OSHA RECORDABLE CASES INCLUDE MEDICAL TREATMENT CASES (I.E. NON-FATAL CASES WITHOUT LOST WORKDAYS), LOST WORKDAY, PERMANENT DISABILITY AND FATAL CASES. FIRST AID INJURIES ARE NOT INCLUDED.

ACCIDENT SITE	OSHA RECORDABLE INJURIES NO.	%
ON COLLECTION ROUTE		
IN ST AT BACK OF TRUCK	946	25.14
IN ST AT CURB	465	12.36
IN ALLEY AT BACK OF TRUCK	368	9.78
IN CUSTOMER'S YD	361	9.59
ON STEP OF VEH	224	5.95
IN ALLEY AT CURB	173	4.60
INSIDE CAB OF VEH	151	4.01
IN CUSTOMER'S DRIVEWAY	109	2.90
ON VEHICLE	86	2.29
ON RUNNING BOARD	67	1.78
IN MIDALLEY	54	1.44
IN MIDSTREET	50	1.33
ON TRUCK BED	11	0.29
ON SIDEWALK	11	0.29
IN ST AT FRONT OF TRUCK	5	0.13
IN ALLEY AT FRONT OF TRUCK	2	0.05
IN CUSTOMER'S RESIDENCE	1	0.03
SUBTOTAL	3,200	85.04
ENROUTE BETWEEN SITES		
INSIDE CAB	33	0.88
ON STEP OF VEH	4	0.11
ON TRUCK BED	2	0.05
ON RUNNING BOARD	1	0.03
SUBTOTAL	41	1.09
AT LANDFILL		
NEXT TO VEH AT DUMP SITE	56	1.49
AT DUMP SITE	32	0.85
ON VEHICLE	27	0.72
IN YARD	25	0.66
NEXT TO VEH	20	0.53
INSIDE CAB OF VEH	14	0.37
IN SHOP/GARAGE	8	0.21
ON STEP OF VEH	6	0.16
IN OFFICE/GATEHOUSE	6	0.16
ON STEP AT DUMP SITE	5	0.13
INSIDE CAB ENROUTE TO DUMP SITE	5	0.13

OSHA RECORDABLE INJURIES

ACCIDENT SITE	NO.	%
INSIDE CAB AT DUMP SITE	4	0.11
ON RUNNING BOARD	3	0.08
ON TRUCK BED AT DUMP SITE	2	0.05
ENROUTE TO DUMP SITE	2	0.05
ON RUNNING BOARD AT DUMP SITE	1	0.03
SUBTOTAL	226	6.01
AT INCINERATOR		
IN PLANT	12	0.32
AT DUMPING FLOOR	11	0.29
IN SHOP/GARAGE	9	0.24
IN YARD	5	0.13
ON VEHICLE	3	0.08
IN OFFICE/GATEHOUSE	3	0.08
INSIDE CAB OF VEH	2	0.05
NEXT TO VEH	2	0.05
ON VEHICLE AT DUMPING FLOOR	2	0.05
ON STEP OF VEH	1	0.03
ON RUNNING BOARD AT DUMPING FLOOR	1	0.03
SUBTOTAL	53	1.41
AT TRANSFER STATION		
NEXT TO VEHICLE	5	0.13
IN YARD	3	0.08
INSIDE CAB OF VEH	2	0.05
ON VEHICLE	1	0.03
SUBTOTAL	12	0.32
AT RECYCLING STATION		
IN PLANT	2	0.05
NEXT TO VEH	1	0.03
ON RUNNING BOARD	1	0.03
IN YARD	1	0.03
SUBTOTAL	5	0.13
AT HEADQUARTERS		
IN SHOP/GARAGE	73	1.94
IN YARD PARKING LOT	52	1.38
ON VEHICLE	10	0.27
NEXT TO VEH	10	0.27
IN OFFICE	10	0.27
AT REFUELING STATION	6	0.16
INSIDE CAB OF VEH	4	0.11
AT WASHRACK	3	0.08
ON STEP OF VEH	2	0.05
ON RUNNING BOARD	1	0.03
SUBTOTAL	175	4.65
IN ROADWAY/FIELD		
SUBTOTAL	18	0.48

OSHA RECORDABLE INJURIES

ACCIDENT SITE	NO.	%
AT OTHER SITE	25	0.66
AT UNKNOWN SITE	33	0.88
SUBTOTAL		
TOTAL	3,763	100.00

FIGURE 15

ALL USERS
ACCIDENT SITES RANKED FROM HIGHEST TO LOWEST
PERCENT OF OSHA DAYS LOST

REPORTING PERIOD: DECEMBER 1975 - DECEMBER 1976

DEFINITIONS: A LOST DAYS CASE IS ONE IN WHICH THE EMPLOYEE INCURRED WORKDAYS LOST AND/OR LIGHT DUTY DAYS DUE TO THE ACCIDENT.

ACCIDENT SITE	OSHA DAYS LOST NO.	%	AVG DAYS LOST LOST DAYS CAS
ON COLLECTION ROUTE			
IN ST AT BACK OF TRUCK	7,764	25.66	13.16
IN ST AT CURB	3,599	11.89	11.43
ON STEP OF VEH	2,407	7.95	16.05
IN CUSTOMER'S YD	2,290	7.57	10.36
IN ALLEY AT BACK OF TRUCK	2,028	6.70	12.22
IN CUSTOMER'S DRIVEWAY	1,383	4.57	18.69
INSIDE CAB OF VEH	1,126	3.72	11.04
IN ALLEY AT CURB	814	2.69	11.00
IN MIDSTREET	802	2.65	25.87
ON VEHICLE	529	1.75	10.17
ON RUNNING BOARD	433	1.43	11.39
IN MIDALLEY	427	1.41	13.34
ON SIDEWALK	76	0.25	10.86
ON TRUCK BED	26	0.09	5.20
IN ST AT FRONT OF TRUCK	11	0.04	5.50
IN ALLEY AT FRONT OF TRUCK	2	0.01	2.00
SUBTOTAL	24,965	82.51	12.92
ENROUTE BETWEEN SITES			
INSIDE CAB	596	1.97	22.92
ON STEP OF VEH	106	0.35	35.33
ON RUNNING BOARD	13	0.04	13.00
SUBTOTAL	740	2.45	23.87
AT LANDFILL			
NEXT TO VEH AT DUMP SITE	624	2.06	26.00
INSIDE CAB ENROUTE TO DUMP SITE	287	0.95	71.75
ON VEHICLE	196	0.65	11.53
INSIDE CAB OF VEH	195	0.64	27.86
AT DUMP SITE	163	0.54	10.87
IN OFFICE/GATEHOUSE	147	0.49	36.75
IN YARD	135	0.45	12.27
IN SHOP/GARAGE	71	0.23	23.67
NEXT TO VEH	61	0.20	5.08
ENROUTE TO DUMP SITE	52	0.17	26.00
ON STEP OF VEH	45	0.15	9.00
ON STEP AT DUMP SITE	23	0.08	7.67
INSIDE CAB AT DUMP SITE	21	0.07	7.00
ON TRUCK BED AT DUMP SITE	17	0.06	8.50

OSHA DAYS LOST

ACCIDENT SITE	NO.	%	AVG DAYS LOST/ LOST DAYS CASE
ON RUNNING BOARD	12	0.04	12.00
ON RUNNING BOARD AT DUMP SITE	1	0.00	1.00
SUBTOTAL	2,086	6.89	17.38
AT INCINERATOR			
IN PLANT	262	0.87	26.20
AT DUMPING FLOOR	207	0.68	25.87
IN SHOP/GARAGE	57	0.19	11.40
IN OFFICE/GATEHOUSE	29	0.10	29.00
ON VEHICLE	25	0.08	8.33
IN YARD	15	0.05	5.00
ON STEP OF VEH	10	0.03	10.00
NEXT TO VEH	10	0.03	5.00
ON RUNNING BOARD AT DUMPING FLOOR	8	0.03	8.00
INSIDE CAB OF VEH	3	0.01	3.00
SUBTOTAL	643	2.13	17.86
AT TRANSFER STATION			
INSIDE CAB OF VEH	54	0.18	27.00
NEXT TO VEHICLE	8	0.03	2.67
IN YARD	3	0.01	3.00
SUBTOTAL	65	0.21	10.83
AT RECYCLING STATION			
IN PLANT	44	0.15	22.00
ON RUNNING BOARD	15	0.05	15.00
SUBTOTAL	59	0.19	19.67
AT HEADQUARTERS			
IN YARD PARKING LOT	555	1.83	17.90
IN SHOP/GARAGE	406	1.34	10.41
NEXT TO VEH	115	0.38	19.17
ON VEHICLE	66	0.22	9.43
IN OFFICE	40	0.13	8.00
ON RUNNING BOARD	25	0.08	25.00
INSIDE CAB OF VEH	23	0.08	7.67
AT REFUELING STATION	15	0.05	15.00
ON STEP OF VEH	6	0.02	3.00
AT WASHRACK	1	0.00	1.00
SUBTOTAL	1,262	4.17	12.75
IN ROADWAY/FIELD			
SUBTOTAL	165	0.55	13.75
AT OTHER SITE			
AT UNKNOWN SITE	147	0.49	9.80
SUBTOTAL	273	0.90	14.37
TOTAL	30,258	100.00	13.39

ALL USERS
ACCIDENT SITES RANKED FROM HIGHEST TO LOWEST
PERCENT OF DIRECT COSTS

REPORTING PERIOD: DECEMBER 1975 - DECEMBER 1976

DEFINITIONS: OSHA RECORDABLE CASES INCLUDE MEDICAL TREATMENT CASES (I.E. NON-FATAL CASES WITHOUT LOST WORKDAYS), AND LOST WORKDAY, PERMANENT DISABILITY AND FATALITY CASES.
FIRST AID INJURIES ARE NOT INCLUDED.
DIRECT COSTS INCLUDE MEDICAL EXPENSES, WORKER'S COMPENSATION BENEFITS AND WAGE CONTINUATION BENEFITS (E.G., INJURY LEAVE) ONLY. INDIRECT COSTS ARE NOT INCLUDED.

INSTRUCTIONS: DETERMINE YOUR ORGANIZATION'S PROBLEM AREAS BY IDENTIFYING THE AREAS WITH THE HIGHEST PERCENTAGES.

ACCIDENT SITE	DIRECT COSTS AMOUNT	%	AVG COSTS OSHA REC IN
ON COLLECTION ROUTE			
IN ST AT BACK OF TRUCK	343,757	21.98	363
IN ST AT CURB	165,763	10.60	356
ON STEP OF VEH	143,423	9.17	640
IN CUSTOMER'S YD	111,100	7.10	307
IN ALLEY AT BACK OF TRUCK	106,602	6.82	289
INSIDE CAB OF VEH	61,359	3.92	406
IN CUSTOMER'S DRIVEWAY	50,493	3.23	463
IN ALLEY AT CURB	45,595	2.92	263
IN MIDSTREET	37,844	2.42	756
ON VEHICLE	34,201	2.19	397
IN MIDALLEY	27,725	1.77	513
ON RUNNING BOARD	23,604	1.51	352
ON SIDEWALK	4,235	0.27	385
ON TRUCK BED	1,579	0.10	143
IN ST AT FRONT OF TRUCK	406	0.03	81
IN ALLEY AT FRONT OF TRUCK	155	0.01	77
IN CUSTOMER'S RESIDENCE	40	0.00	40
SUBTOTAL	1,213,351	77.59	379
ENROUTE BETWEEN SITES			
INSIDE CAB	30,027	1.92	909
ON STEP OF VEH	2,899	0.19	724
ON RUNNING BOARD	298	0.02	298
ON TRUCK BED	89	0.01	44
SUBTOTAL	34,522	2.21	842
AT LANDFILL			
NEXT TO VEH AT DUMP SITE	69,133	4.42	1,234
ON VEHICLE	66,328	4.24	2,456
INSIDE CAB ENROUTE TO DUMP SITE	11,096	0.71	2,219
AT DUMP SITE	8,875	0.57	277
IN OFFICE/GATEHOUSE	7,812	0.50	1,302

DIRECT COSTS

ACCIDENT SITE	AMOUNT	%	AVG COSTS/ OSHA REC INJ
IN YARD	7,787	0.50	311
INSIDE CAB OF VEH	7,116	0.46	508
NEXT TO VEH	4,730	0.30	236
ON STEP OF VEH	3,638	0.23	606
ENROUTE TO DUMP SITE	3,462	0.22	1,731
IN SHOP/GARAGE	2,429	0.16	303
ON STEP AT DUMP SITE	1,949	0.12	389
ON TRUCK BED AT DUMP SITE	1,524	0.10	762
INSIDE CAB AT DUMP SITE	1,161	0.07	290
ON RUNNING BOARD	515	0.03	171
ON RUNNING BOARD AT DUMP SITE	236	0.02	236
SUBTOTAL	199,043	12.73	881
AT INCINERATOR			
IN PLANT	11,364	0.73	947
AT DUMPING FLOOR	5,065	0.32	460
IN OFFICE/GATEHOUSE	3,111	0.20	1,037
IN SHOP/GARAGE	2,323	0.15	258
NEXT TO VEH	584	0.04	292
IN YARD	573	0.04	114
ON VEHICLE	508	0.03	169
INSIDE CAB OF VEH	490	0.03	245
ON STEP OF VEH	453	0.03	453
ON RUNNING BOARD AT DUMPING FLOOR	350	0.02	350
ON VEHICLE AT DUMPING FLOOR	95	0.01	47
SUBTOTAL	25,178	1.61	475
AT TRANSFER STATION			
INSIDE CAB OF VEH	1,986	0.13	993
NEXT TO VEHICLE	484	0.03	96
IN YARD	253	0.02	84
ON VEHICLE	46	0.00	46
SUBTOTAL	2,789	0.18	232
AT RECYCLING STATION			
IN PLANT	2,466	0.16	1,233
ON RUNNING BOARD	473	0.03	473
NEXT TO VEH	75	0.00	75
IN YARD	20	0.00	20
SUBTOTAL	3,034	0.19	607
AT HEADQUARTERS			
IN YARD PARKING LOT	29,809	1.91	573
IN SHOP/GARAGE	22,154	1.42	303
NEXT TO VEH	6,421	0.41	642
IN OFFICE	2,653	0.17	265
ON VEHICLE	2,361	0.15	236
INSIDE CAB OF VEH	841	0.05	210
AT REFUELING STATION	747	0.05	124
ON RUNNING BOARD	645	0.04	645
ON STEP OF VEH	602	0.04	301

DIRECT COSTS

ACCIDENT SITE	AMOUNT	%	AVG COSTS OSHA REC IN
AT WASHRACK	185	0.01	61
SUBTOTAL	66,967	4.28	383
IN ROADWAY/FIELD			
SUBTOTAL	5,406	0.35	300
AT OTHER SITE			
AT UNKNOWN SITE	7,308	0.47	292
SUBTOTAL	13,598	0.87	412
TOTAL	1,563,888	100.00	416

FIGURE 17

ALL USERS
INJURY TYPES RANKED FROM HIGHEST TO LOWEST
PERCENT OF OSHA RECORDABLE INJURIES

REPORTING PERIOD: DECEMBER 1975 - DECEMBER 1976

DEFINITIONS: OSHA RECORDABLE CASES INCLUDE MEDICAL TREATMENT CASES (I.E. NON-FATAL CASES WITHOUT LOST WORKDAYS), LOST WORKDAY, PERMANENT DISABILITY AND FATAL CASES. FIRST AID INJURIES ARE NOT INCLUDED.

TYPE OF INJURY	OSHA RECORDABLE INJURIES NO.	%
SPRAIN OR STRAIN	1,525	40.53
BRUISE	763	20.28
CUT/PUNCTURE	707	18.79
IRRITATION	220	5.85
FRACTURE	111	2.95
STING	71	1.89
ABRASIONS	67	1.78
DERMATITIS	44	1.17
UNKNOWN TYPE OF INJURY	38	1.01
CHEMICAL BURN	27	0.72
OTHER TYPE OF INJURY	27	0.72
BURN FROM HEAT	26	0.69
MULTIPLE INJURIES	18	0.48
DISLOCATION	17	0.45
INFECTION	17	0.45
ASPHYXIATION OR DROWNING	16	0.43
POISONING OR ALLERGIC REACTION	14	0.37
INFLAMMATION OF THE JOINTS	10	0.27
CONCUSSION	9	0.24
HEAT STROKE,EXHAUSTION OR CRAMPS	8	0.21
AMPUTATION	7	0.19
HERNIA	6	0.16
FROSTBITE OR OTHER LOW TEMP EFFECT	3	0.08
NOSEBLEED	3	0.08
TORN CARTILAGE	3	0.08
DENTAL INJURY	2	0.05
AVULSION	1	0.03
ELECTRIC SHOCK	1	0.03
PARALYSIS	1	0.03
HEART ATTACK	1	0.03
TOTAL	3,763	100.00

ALL USERS
INJURY TYPES RANKED FROM HIGHEST TO LOWEST
PERCENT OF OSHA DAYS LOST

REPORTING PERIOD: DECEMBER 1975 - DECEMBER 1976

DEFINITIONS: A LOST DAYS CASE IS ONE IN WHICH THE EMPLOYEE INCURRED WORKDAYS LOST AND/OR LIGHT DUTY DAYS DUE TO THE ACCIDENT.

TYPE OF INJURY	OSHA DAYS LOST NO.	%	AVG DAYS LOST LOST DAYS CAS
SPRAIN OR STRAIN	16,400	54.20	14.20
BRUISE	3,797	12.55	8.57
FRACTURE	3,568	11.79	37.17
CUT/PUNCTURE	2,516	8.32	9.15
DISLOCATION	756	2.50	47.25
AMPUTATION	609	2.01	87.00
MULTIPLE INJURIES	526	1.74	37.57
CONCUSSION	279	0.92	34.87
CHEMICAL BURN	219	0.72	19.91
OTHER TYPE OF INJURY	181	0.60	12.07
IRRITATION	175	0.58	2.50
UNKNOWN TYPE OF INJURY	163	0.54	6.52
ABRASIONS	154	0.51	5.70
BURN FROM HEAT	131	0.43	8.19
INFLAMMATION OF THE JOINTS	130	0.43	14.44
HERNIA	110	0.36	27.50
PARALYSIS	86	0.28	86.00
TORN CARTILAGE	83	0.27	27.67
INFECTION	74	0.24	10.57
POISONING OR ALLERGIC REACTION	71	0.23	6.45
DERMATITIS	66	0.22	3.88
FROSTBITE OR OTHER LOW TEMP EFFECT	53	0.18	26.50
STING	32	0.11	3.20
ASPHYXIATION OR DROWNING	26	0.09	3.25
AVULSION	25	0.08	25.00
HEAT STROKE,EXHAUSTION OR CRAMPS	21	0.07	4.20
NOSEBLEED	6	0.02	3.00
DENTAL INJURY	1	0.00	1.00
TOTAL	30,258	100.00	13.39

ALL USERS
INJURY TYPES RANKED FROM HIGHEST TO LOWEST
PERCENT OF DIRECT COSTS

REPORTING PERIOD: DECEMBER 1975 - DECEMBER 1976

DEFINITIONS: OSHA RECORDABLE CASES INCLUDE MEDICAL TREATMENT CASES (I.E. NON-FATAL CASES WITHOUT LOST WORKDAYS), AND LOST WORKDAY, PERMANENT DISABILITY AND FATALITY CASES.
FIRST AID INJURIES ARE NOT INCLUDED.
DIRECT COSTS INCLUDE MEDICAL EXPENSES, WORKER'S COMPENSATION BENEFITS AND WAGE CONTINUATION BENEFITS (E.G., INJURY LEAVE) ONLY. INDIRECT COSTS ARE NOT INCLUDED.

TYPE OF INJURY	DIRECT COSTS AMT.	%	AVG COSTS/ OSHA REC INJ
SPRAIN OR STRAIN	729,061	46.62	478
BRUISE	197,353	12.62	259
FRACTURE	168,568	10.78	1,519
CUT/PUNCTURE	135,147	8.64	191
MULTIPLE INJURIES	87,757	5.61	4,875
AMPUTATION	62,165	3.98	8,881
PARALYSIS	42,737	2.73	42,737
DISLOCATION	25,202	1.61	1,482
IRRITATION	17,16	1.10	78
OTHER TYPE OF INJURY	13,555	0.87	502
CONCUSSION	13,272	0.85	1,475
ABRASIONS	11,786	0.75	176
CHEMICAL BURN	10,179	0.65	377
UNKNOWN TYPE OF INJURY	7,664	0.49	202
HERNIA	5,896	0.38	983
BURN FROM HEAT	5,484	0.35	211
INFLAMMATION OF THE JOINTS	5,255	0.34	525
TORN CARTILAGE	4,354	0.28	1,451
STING	3,760	0.24	53
DERMATITIS	3,725	0.24	85
INFECTION	3,578	0.23	210
POISONING OR ALLERGIC REACTION	2,808	0.18	201
FROSTBITE OR OTHER LOW TEMP EFFECT	2,716	0.17	905
ASPHYXIATION OR DROWNING	1,846	0.12	115
HEAT STROKE,EXHAUSTION OR CRAMPS	1,261	0.08	158
AVULSION	917	0.06	917
NOSEBLEED	390	0.02	130
DENTAL INJURY	135	0.01	67
HEART ATTACK	125	0.01	125
ELECTRIC SHOCK	24	0.00	24
TOTAL	1563,888	100.00	416

FIGURE 20

ALL USERS
PARTS OF BODY INJURED RANKED FROM HIGHEST TO LOWEST PERCENT OF
OSHA RECORDABLE INJURIES, WORKDAYS LOST AND DIRECT COSTS

REPORTING PERIOD: DECEMBER 1975 - DECEMBER 1976

DEFINITIONS: OSHA RECORDABLE CASES INCLUDE MEDICAL TREATMENT CASES (I.E. NON-FATAL CASES WITHOUT LOST WORKDAYS), LOST WORKDAY, PERMANENT DISABILITY AND FATALITY CASES. FIRST AID INJURIES ARE NOT INCLUDED.
DIRECT COSTS INCLUDE MEDICAL EXPENSES, WORKER'S COMPENSATION BENEFITS AND WAGE CONTINUATION BENEFITS (E.G., INJURY LEAVE) ONLY.
INDIRECT COSTS ARE NOT INCLUDED.

OSHA RECORDABLE INJURIES			OSHA DAYS LOST				DIRECT COSTS			
PART OF BODY	OSHA REC INJ NO.	OSHA REC INJ %	PART OF BODY	DAYS LOST NO.	DAYS LOST %	AVG/LOST DAYS CASE	PART OF BODY	DIRECT COSTS AMT.	DIRECT COSTS %	AVG COSTS/ OSHA REC INJ
BACK	733	19.48	BACK	10,175	33.63	17.22	BACK	460,297	29.43	628
EYES	322	8.56	LEG	2,140	7.07	13.54	MULTIPLE BODY PARTS	181,841	11.63	1,638
LEG	289	7.68	ANKLE	2,123	7.02	11.29	LEG	126,584	8.09	438
ANKLE	255	6.78	KNEE	1,912	6.32	13.28	KNEE	94,226	6.03	434
FINGERS	223	5.93	MULTIPLE BODY PARTS	1,784	5.90	24.44	ANKLE	90,510	5.79	355
KNEE	217	5.77	SHOULDER	1,478	4.88	11.28	FOOT	78,969	5.05	374
FOOT	211	5.61	FOOT	1,448	4.79	11.68	SHOULDER	67,635	4.32	336
ARM	204	5.42	HAND	1,349	4.46	16.06	HAND	67,014	4.29	364
SHOULDER	201	5.34	FINGERS	1,222	4.04	12.86	ARM	56,716	3.63	278
HAND	184	4.89	ARM	946	3.13	11.97	FINGERS	49,031	3.14	220
MULTIPLE BODY PARTS	111	2.95	CHEST	793	2.62	13.00	CHEST	38,871	2.49	414
CHEST	94	2.50	WRIST	678	2.24	12.33	WRIST	32,243	2.06	347
WRIST	93	2.47	TOES	549	1.81	16.64	EYES	29,278	1.87	91
ELBOW	81	2.15	NECK	475	1.57	11.31	TOES	26,194	1.67	546
NECK	67	1.78	ELBOW	447	1.48	9.51	NECK	20,943	1.34	313
GROIN	63	1.67	HIPS	413	1.36	11.47	GROIN	19,912	1.27	316
HIPS	51	1.36	GROIN	398	1.32	8.47	ABDOMEN	19,372	1.24	497
THUMB	50	1.33	ABDOMEN	384	1.27	16.00	HIPS	18,995	1.21	372
TOES	48	1.28	SKULL	320	1.06	26.67	ELBOW	17,453	1.12	215
ABDOMEN	39	1.04	EYES	294	0.97	2.72	SKULL	16,879	1.08	734
SCALP	34	0.90	THUMB	261	0.86	10.87	THUMB	13,376	0.86	268
INTERNAL ORGANS	32	0.85	SCALP	205	0.68	12.06	SCALP	11,750	0.75	346
FACE	26	0.69	INTERNAL ORGANS	127	0.42	7.06	INTERNAL ORGANS	7,188	0.46	225
FOREHEAD	25	0.66	TRUNK	83	0.27	5.53	FOREHEAD	5,026	0.32	201
SKULL	23	0.61	FACE	81	0.27	5.79	TRUNK	3,466	0.22	173
TRUNK	20	0.53	FOREHEAD	53	0.18	4.42	FACE	3,441	0.22	132
EARS	16	0.43	NOSE	34	0.11	4.86	NOSE	2,000	0.13	167
MOUTH	12	0.32	UNK BODY PART	28	0.09	5.60	UNK BODY PART	1,390	0.09	232
NOSE	12	0.32	OTHER BODY PART	18	0.06	6.00	EARS	865	0.06	54
CHEEK	8	0.21	EARS	11	0.04	3.67	MOUTH	779	0.05	65
UNK BODY PART	6	0.16	JAW	10	0.03	5.00	JAW	579	0.04	145
BUTTOCKS	5	0.13	CHEEK	8	0.03	8.00	BUTTOCKS	457	0.03	91
JAW	4	0.11	MOUTH	7	0.02	1.75	OTHER BODY PART	380	0.02	95
OTHER BODY PART	4	0.11	BUTTOCKS	4	0.01	2.00	CHEEK	229	0.01	29
TOTAL	3,763	100.00	TOTAL	30,258	100.00	13.39	TOTAL	1563,888	100.00	416

Special Reports

A series of special reports on solid waste accidents will be developed by the end of this year utilizing IRIS user data (over 5,000 injuries). The topics address industry safety problems for which IRIS has seen a need but was not able to cover in other reports (e.g., Quarterly Safety Management Report, Accident Trends). The reports will either be introduced in an edition of the IRIS News or as a separate handout. Possible topics so far are:

1. Overexertions vs age and experience
2. Experience vs accidents
3. Protective clothing
4. Seasonal accident variations
5. Crew type comparisons
   a. size
   b. task vs fixed
   c. backyard vs curbside
6. Injury rates by division (e.g., residential collection, commercial collection, landfill, street cleaning, etc.)
7. Worker's compensation policies vs injury rates
8. Incentive programs - types and effectiveness
9. Caught in packer accidents
10. Injury rates by equipment type

Users are encouraged to make further suggestions.

National Safety Council

What is the National Safety Council? It is a non-profit, non-governmental public service organization. It was formed in 1913 and federally chartered in 1953 by the U.S. Congress to arouse and maintain interest in accident prevention and to encourage adoption and implementation of safety methods by all types of organizations and individuals.

The Public Employee Section was organized in 1947 as a component of the Industrial Department of the National Safety Council, or 34 years after the Council was formed. Within this section is the Refuse Collection Division consisting of safety professionals within solid waste industries throughout the United States.

Benefits from NSC Affiliation

1. A centralized, uniformly applied recordkeeping system, complying with OSHA requirements.
2. A central source of safety knowledge, resources, which provides for lateral exchange of information.
3. Assistance in standards development utilizing the expertise available within the industry.
4. An award system for accident reduction.
5. Safety Training Institute is available.
6. Literature, such as guides, posters, slide shows, films, specially adapted for the industry.
7. Through the Section Administrator, unlimited "consultation" is available.
8. Newsletters and manuals provide the rapid interchange of data.

How Does Membership Work

Annual dues are based on the number of full-time employees (including office, professional, and drivers). Twenty-five percent (25%) of the dues are returned to the member in the form of accident prevention materials.

For additional information on the materials available or the cost of membership, the address is:

National Safety Council
444 North Michigan Avenue
Chicago, Illinois 60611
(312) 527-4800

The Staff Representative for the Public Employees Section is Carlton Piepho.

CALENDAR

October 1977

October 17-20 National Safety Congress and Exposition. The National Safety Council will be holding the 65th National Safety Congress and Exposition in Chicago. All sessions are open to visitors. The refuse collection and disposal division of the Public Employee Section meets Tuesday afternoon. Ms. Kelly King and Ms. Barbara Reiley will be giving speeches on IRIS and the safety manual.

SPECIAL REPORTS

EXHIBIT 21

THE USE OF PERSONAL PROTECTIVE EQUIPMENT AND ITS EFFECT ON ACCIDENT REDUCTION

Personal protective equipment is generally recognized as one form of accident reduction measure in any industry, along with equipment design modification, employee training, job redesign, operational change, etc. In fact, the importance of personal protective equipment is amply illustrated in this industry of constant material handling by the insistance of most solid waste agencies that their employees wear gloves.

The use of personal protective equipment will result in less injuries or less severe injuries but will not eliminate injuries. However, the reduction of any injury will affect the organization directly in terms of reducing the direct costs of accidents (e.g., medical bills, wage continuation payments, court settlements) and the indirect costs (e.g., time spent by supervisor taking employee to doctor and filling out injury forms, time spent by employee going to doctor, time spent by coworkers aiding injured employee, replacement time of substitute, etc.), which can be up to four times the direct costs.

To justify the expense of the personal protective equipment, its cost must be weighed against its accident reduction potential at each solid waste organization. Other factors that affect the decision are increased employee morale and the fact that it will reduce human suffering. With these in mind, IRIS analyzed four types of personal protective equipment, gloves, safety shoes, safety glasses and goggles, and head protection, to determine how much protection they provided and what the accident reduction potential of each was.

GLOVES

Because the solid waste industry is very much of a materials handling industry of a large number of customers, the hazardous waste and containers being handled are harder to control than if the employee was in a material handling job such as an assembly line worker whose products being handled are more uniform. Therefore, personal protective equipment for the hands is the next viable, but not the most effective, means of controlling injuries to the hands and wrists.

Gloves can protect the wearer from receiving minor cuts, abrasions, contact dermatitis, frostbite, insect bites, and burns from heat or caustic chemicals to the hands and wrists.

Gloves may also reduce the seriousness of cuts, punctures, and bruises but are useless as protection against more serious types of injury such as fractures and amputations. Infections that developed from cuts and sprains were also eliminated as being nonpreventable.

Examining the first group of injuries to the hands and wrists for the period of 1/76 through 6/77 (6,275 OSHA recordable injuries, 49,226 days lost, $2,602,203 direct costs, and 32,409,674 total man-hours of exposure), the IRIS data indicates that employees who were not wearing gloves received twice as many injuries. A table of the rates and numbers for the two groups of employees is given below:

	Wearing Gloves	Not Wearing Gloves
No. OSHA Recordable Inj.	275	141
OSHA Days Lost	693	284
Direct Costs	$37,422	$16,501
Man-Hours of Exposure	25,562,319	6,847,355
OSHA Incidence Rate*	2.15	4.10
OSHA Severity Rate	5.4	8.3
Direct Costs Per Man-Year	$2.90	$4.80

The injuries to the hands and wrists which are affected by the wearing of gloves were 48% less for non-first aid cases, 35% less in days lost and 40% less in direct costs.

As the man-hours of exposure indicate, four-fifths of the IRIS employees were wearing gloves provided by the users on the job. Injury rates must be used to compare accident reduction since they reflect how many total employees were wearing or not wearing gloves on the route, not just how many injured employees were wearing or not wearing gloves.

As for how a solid waste organization can use these rates to expostulate actual injury cost savings vs. cost of providing gloves, comparative ratios can be established.

1. Using the OSHA incidence rates above, which are the number of OSHA recordable injuries per 100 employees per year, a solid waste organization with 200 employees who are provided with gloves can expect to have on the average 4.3 injuries to the hands and wrists that could be affected by the use of the

*An explanation of the injury rates is given in Appendix A.

gloves. On the other hand, a solid waste organization with 200 employees that are not provided with gloves can expect to have on the average 8.2 non-first aid injuries to the hands and wrists that might have been prevented or reduced in severity with the use of gloves. It should be noted also that gloves should be able to protect the wearer from most first aid injuries, which might later become OSHA recordable.

2. Using the OSHA severity rates above, they represent the number of days lost per 100 employees per year. Therefore, a solid waste organization with 200 employees that are provided with gloves can expect on the average to lose 10.8 days due to hand and wrist injuries that are affected by the use of gloves while an organization that does not provide gloves can expect to lose 16.6 days. The days lost, of course, does not include the time spent on the day of the injury.

3. Using the direct costs per man-year above, they provide a good measure of cost effectiveness since they are the actual costs spent per employee on the payroll for preventable injuries to the hands and wrists. The difference between the two costs is $1.90, or an organization planning on providing gloves to their employees can expect to save $1.90 per man per year on direct injury costs. But again, the savings on indirect costs to an organization can be up to four times the direct costs, and therefore, the maximum savings per employee per year provided with gloves would be $9.50 (5 times $1.90). Taking the computations one step further, an organization of 200 employees can expect to save $380 in direct costs and $1,900 counting indirect costs. Note that the quality of the gloves provided by the IRIS users in the data analyzed was not accounted for. Presumably, had the

users all provided high quality gloves to their employees, less injuries would have occurred and therefore more cost savings could have been demonstrated.

Once the need and cost effectiveness of providing gloves at an organization is established, the question arises as to what is available and what should be considered in purchasing the right type of gloves. In addition, a wide range of prices are available depending on the quality of the product and the manufacturer so it would be wise to do comparative price shopping before making a final purchase. (Gloves in use at IRIS users range in price from $.79-$5.50 a pair.) The following discussion covers some factors to consider when choosing the right pair of gloves, but it is not meant to make specific recommendations since each organization will have different needs that will affect their choice.

Factors to consider when purchasing work gloves:

1. Material: The material(s) used in the construction of the glove is important for abrasion resistance (or rate of wear), protection against cuts and punctures, and grip provided. Abrasion resistance is better provided by leather or suede gloves, but canvas gloves with suede palms, knuckles, and fingertips are more widely used because they are less expensive than the leather and yet provide better grip and last longer than the cloth gloves. For handling containers during wet weather, some employers also provide a second pair of rubber or vinyl coated gloves. In addition, rubber gloves with rough material on the palms and fingers are available. However, all rubber and leather gloves have a problem of causing excessive sweating since they allow less air circulation than ones that have cloth. This may make them less acceptable to collectors who are constantly using their hands. Gloves that have wire mesh afford the most protection from sharp objects, but these heavier, more expensive gloves can impair the employee's sense of touch and manual dexterity.

2. Length: The gauntlet length is partially a factor of protection, and partially

determined by climate. During colder weather, a 3" gauntlet provides both added protection to wrists from cuts and added warmth. However, it is unreasonable to expect the men to wear long gauntlets during hot weather. Most organizations then switch to a 1½" length.

3. Insulation: Leather mittens with thermal cloth inserts combine excellent protection with warmth for cold climates. In extremely cold temperatures, mittens are recommended rather than gloves because they keep the fingers warmer.

4. Replacement: The frequency with which the gloves need to be replaced varies with the quality of the glove and the fit. On the average they are replaced once a month, although they can wear out as frequently as once a week, or last as long as three months. It is important to replace gloves as soon as they become worn because a tattered glove affords less protection and creates hazards.

SAFETY SHOES

In the solid waste industry, the collectors are exposed to a number of hazardous surface conditions that are virtually uncontrollable, since it is an outdoors occupation that not only includes a great deal of walking but also getting on and off collection equipment. Typical surface related accidents include slips and falls on wet, oily, icy surfaces and objects on the ground, stepping on sharp objects (e.g., nails, glass), and dropping containers on the feet. These accidents result in sprains, fractures, punctures, and bruises to the ankle, foot and toes. Unlike the protection afforded by gloves, safety shoes can provide nearly total protection against these injuries, except for ankle sprains. Therefore, safety shoes can greatly reduce the frequency of the injuries to these body parts which amounted to 13.08% of the OSHA recordable injuries for this time period (6.45% of which were to the ankles, 5.56% to the foot and 1.07% to the toes, totaling to 821 injuries). In fact, ankle injuries resulted in the fourth highest percentage of injuries to a body part, below back, eyes and leg injuries.

The following discussion of safety shoes will be organized by the degree of protection, including a discussion of the IRIS data.

1. Safety shoes with ankle support. A high ankled boot can support the ankle, thus reducing ankle sprains, as well as protect the ankle from sharp objects. Different heights of ankle support, 6" and 8", are provided by safety shoe manufacturers. Slightly more than half of the employees on IRIS are required to wear safety shoes on the route, and a large majority of these had to wear high ankled safety shoes. For organizations that did not require their employees to wear safety shoes, their man-hours of exposure was placed in the "not wearing safety shoes" column.

   The IRIS injury descriptions obtained did not request whether the injured employee was wearing safety shoes with ankle support or not. Therefore, the analyses of the ankle sprains below is only for whether the employees were wearing safety shoes or not, not whether they were wearing high ankled safety shoes or not. However, over half the users require their employees to wear high ankled safety shoes, and therefore, the injury rate differences presumably are not as large as can be expected.

	Wearing Safety Shoes	Not Wearing Safety Shoes
No. OSHA Recordable Inj.	117	234
OSHA Days Lost	1,184	1,271
Direct Costs	$47,771	$56,212
Man-Hours of Exposure	16,431,485	15,978,189
OSHA Incidence Rate	1.42	2.93
OSHA Severity Rate	14.2	15.9
Direct Costs Per Man-Year	$5.81	$7.03

Ankle sprains were 52% less in incidence of non-first aid injuries, 10% less in OSHA severity, and 17% less in direct costs per man-year for employees required to wear safety shoes. Keeping this in mind, the following figures can be derived:

a. A solid waste organization of 200 employees provided with safety shoes that have high ankle support can expect to have less than 2.8 sprained ankle injuries a year while an organization that does not provide safety shoes with high ankle support will have 5.9 sprained ankle injuries.

b. The OSHA severity rates for the two columns were very similar, indicating that although the employees who were wearing safety shoes had less sprained ankle injuries, they resulted in higher days lost. The OSHA severity rates show that an organization of 200 employees who are provided with high ankled safety shoes can expect to lose less than 28.8 days lost due to ankle sprains, while ones that do not provide high ankled safety shoes can expect 31.8 days to be lost.

c. As for cost savings, again the direct costs per man-year figures were very similar, reflecting the close severity rates. They show that an organization of 200 employees planning on providing their employees with high ankled safety shoes can expect to save in direct injury costs at least $1.22 per employee per year, or $244 per 200 employees per year. Adding the maximum cost savings from indirect costs, they could save $6.10 per employee or $1,220 per 200 employees per year. The savings of at least $6.10 per employee per year accounts only for sprained ankle injuries, which is only one type of injury affected by safety shoes. One accident type that is difficult to measure, and which was not attempted for this report, are other injuries that occur from slips and falls, since they are affected by the slip resistance of the shoes. Other injury types, besides sprained ankles, that can occur from slips and falls are back strains, fractures, and cuts and bruises associated with falling against objects. Even assuming that only 10%

of these injuries are affected by whether the employee was wearing safety shoes or not, the accident savings would probably double, especially since back strains are three times more frequent than ankle sprains and result in seven times higher direct costs. In addition, the savings from the reduction of other types of injury to the foot (e.g., puncture wounds, fractures, bruises) that are preventable through additional protection on the safety shoes (e.g., metatarsol guards, steel toes, steel insoles) will be discussed in the following sections. Then the total savings from each foot protective equipment will be summarized to justify providing employees with safety shoes.

Safety shoes with ankle support cost under $30 on the average, and users find that their employees whose jobs require extensive walking wear out approximately two pairs of shoes a year. To allay the cost of providing safety shoes, many of the IRIS users provide discounts on the safety shoes or allot so much dollars per employee per year for safety shoes instead of providing the full cost. Of course, these users insist that their employees wear them on the job.

2. Safety shoes with steel toes*. The added protection of steel toes on safety shoes will prevent such toe injuries as bruises and fractures but will not totally prevent amputations (although the amputation might result in lesser injury, e.g., a fracture or severe cut). Typical accidents that result in toe injuries

---

*For tests methods for steel toe impact resistance, refer to "American National Standard for Men's Safety-Toe Footwear", (ANSI Z41.1-1967, reaffirmed 1972).

include dropping containers or bulky wastes being handled, pulling bulk containers over foot, and vehicle running over foot.

Only a quarter of the IRIS user employees were required to wear safety shoes with steel toes, and the injuries to the toes that are preventable accounted for 0.79% of the total OSHA recordable injuries, 0.93% of the days lost, and 0.74% of the direct costs for the reporting period. Analyzing the toe injuries (excluding the two toe amputations) for the employees not wearing steel toed safety shoes:

	Wearing Steel Toed Safety Shoes	Not Wearing Steel Toed Safety Shoes
No. OSHA Recordable Inj.	-	50
OSHA Days Lost	-	462
Direct Costs	-	$19,643
Man-Hours of Exposure	8,353,195	24,056,479
OSHA Incidence Rate	-	.42
OSHA Severity Rate	-	3.84
Direct Costs Per Man-Year	-	$1.63

Of the total percentage of the foot, toe and ankle injuries, preventable injuries to the toes would eliminate 6% of the OSHA recordable injuries, 7.4% of the days lost, and 6.9% of the direct costs.

The accident reduction potential and cost effectiveness of requiring steel toes on the safety shoes would be:

a. A reduction of .84 OSHA recordable injuries per 200 employees per year.

b. A reduction of 7.48 days lost per 200 employees per year.

c. A reduction of $1.63 in direct costs per employee per year or a reduction of $326 per 200 employees per year. This injury

cost saving well justifies the added protection, since the steel toes do not alter the price of the safety shoes much.

3. Safety shoes with steel insoles or inserts. These additions to the safety shoe will protect the employee against puncture wounds to the foot from sharp objects on the ground (e.g., glass, nails, boards with nails). Little more than 1% of the employees on line in IRIS wear safety shoes with puncture protection, even though these accidents were the next most frequent of the injuries preventable by the proper footwear.

	Wearing Safety Shoes With Steel Insoles or Inserts	Not Wearing Safety Shoes With Steel Insoles or Inserts
No. OSHA Recordable Inj.	-	172
OSHA Days Lost	-	338
Direct Costs	-	$23,415
Man-Hours of Exposure	382,265	32,027,409
OSHA Incidence Rate	-	1.07
OSHA Severity Rate	-	2.11
Direct Costs Per Man-Year	-	$1.46

The accident reduction potential and cost effectiveness of requiring steel insoles or inserts in the safety shoes would be:

a. A reduction of 2.14 non-first aid injuries per 200 employees per year.

b. A reduction of 4.22 days lost per 200 employees per year.

c. A reduction of $1.46 in direct costs per employee per year or $292 per 200 employees per year. Steel toe inserts vary in price range from $3-$4 but may not be as comfortable as the steel insoles.

4. Safety shoes with metatarsal protection. No present IRIS user require their employees to wear metatarsal protection on their safety shoes. However, an examination of the foot injuries, excluding toe injuries, that can be prevented by metatarsal protection (e.g., bruises, fractures) shows ample need for the solid waste employees. The bruised and fractured feet accounted for 94 OSHA recordable injuries, 1,335 days lost and $66,151 in direct costs (1.5%, 2.7% and 2.5% respectively of the totals for the reporting period).

   Using the total man-hours of exposure for the period of 32,409,674, the following rates can be derived:

   a. An OSHA incidence rate of .58. Therefore, a reduction of 1.16 non-first aid injuries per 200 employees per year can be expected if metatarsal protection is required.

   b. An OSHA severity rate of 8.24. Therefore, a reduction of 16.48 days lost per 200 employees per year can be expected if metatarsal protection is provided.

   c. A direct cost per man-year rate of $4.08, or a direct cost saving of $4.08 per employee per year. The addition of metatarsal protection to a pair of safety shoes can raise its price from $4-$5.

The disadvantage of metatarsal protection on safety shoes is the added weight. Since solid waste collectors are in constant motion throughout the day, the added weight on their feet may result in increased fatigue, and therefore, increased injury.

The following table summarizes the injury cost savings, both direct and indirect, to the employer if different types of safety shoes are being considered as a requirement for the job. Various combinations of cost savings of the types of protection afforded are given. Although provision of the full cost of the safety shoes with added protective devices are not fully cost justified, they are enough to provide strong argument for providing discounts to the employees to obtain safer footwear.

COST EFFECTIVENESS OF PROVIDING FOOTWEAR

(SAFETY SHOES)

Type	Direct Cost Savings Per Employee	Direct and Indirect Cost Savings Per Employee
With high ankle support	$1.22	$ 6.10
With steel toe	$1.63	$ 8.15
With steel insole or insert	$1.46	$ 7.30
With metatarsal protection	$4.08	$20.40
With high ankle support and steel toe	$2.85	$14.25
With high ankle support and steel insole or insert	$2.68	$13.40
With high ankle support, steel toe, and steel insole or insert	$4.31	$21.55
With high ankle support, steel toe, and metatarsal protection	$6.93	$34.65
With steel toe and metatarsal protection	$5.71	$28.55
With steel toe and steel insole or insert	$3.09	$15.45
With high ankle support, steel toe, steel insole or insert, and metatarsal protection	$8.39	$41.95

Other factors that bear consideration when deciding on the right type of safety shoes are:

1. Slip Resistance. Crepe, gum rubber, neoprene, and even rubber tires are examples of materials employed to make shoe soles more slip resistant, although both crepe and gum rubber wear out in a matter of weeks where the employees are walking a lot. In addition, the pattern of grooves,

notches, and spikes in the sole increases traction for a shoe. Strap on cleats have also been tried by some organizations to provide more traction on slippery ground. On routes where there is a lot of walking, particularly in backyards, they can be helpful in preventing falls. However, there is a problem of cleats causing falls on routes where the men are getting on and off the riding step frequently as the cleats tend to get caught in the mesh step. When determining the degree of slip resistance required in a safety shoe, the anticipated amount of snow, ice, and rain in any given area must be considered. Many organizations provide more than one kind of safety shoe to allow for prolonged inclement weather, issuing shoes with higher slip resistance for the winter months. During dry weather, it is better if the shoe has less traction or the employee's feet are likely to "stick" to the pavement, thus increasing the incidence of knee and ankle problems.

2. Durability. "A Preliminary Investigation of the Performance of Men's Safety-Toe Footwear" conducted by the National Institute for Occupational Safety and Health (NIOSH) in 1975 found that shoe soles made of composition material, neoprene crepe, and neoprene had the highest resistance to impact tests while the nylon, gum and leather soles withstood the compression tests best. However, the conclusion of the study was that further testing and research was needed to arrive at any definitive data. An organization may want to test different types of safety shoes on the routes to ascertain which is best for their local needs.

3. Climatic Protection. The sorrel boot is heavily insulated and affords excellent protection during cold weather. Some organizations also provide rubber boots or overshoes for wet days.

4. Comfort. It is important that safety shoes provided to collectors be comfortable because of the extensive walking required. Crepe, rubber or neoprene last longer and provide better footing. A compromise must be reached between safety, wearability, and comfort.

5. Style. A great variety of styles for safety shoes is available. Many organizations restrict their employees' choice to those shoes having a work shoe appearance. While some agencies allow oxfords, many managers believe that the boot style provides more ankle support. At any rate, the boot style appears to be most popular to the employees where a choice is available.

EYE PROTECTION

Eye injuries, surprisingly, are the second most common injuries in the solid waste industry, and they can be virtually eliminated with the wearing of safety glasses or goggles. Most of the eye injuries occur in front of the hopper. When employees are dumping containers that have particulate contents (e.g., ashes, sand, dust, dirt), they receive objects in their eyes that cause irritation. In addition, since it is an outdoors occupation, on a windy day, particularly on unpaved roads, at disposal sites, and in front of the hopper, solid waste employees are exposed to wind-blown particles. Lastly, the most serious exposure to eye injuries is from being near an operating packer panel, where objects are propelled when plastic bags burst, when aerosol cans are crushed, when plastic containers of caustic chemicals burst (e.g., bleach, detergent, cleaners, solvents, etc.), and when glass containers shatter.

Although the potential for a serious eye injury is very real (e.g., blindness) since employees are being struck by sharp objects from the hopper constantly (particularly glass), it has not occurred to an IRIS user. Eye injuries account for 8.38% of the OSHA recordable injuries, but only .95% of the days lost and 1.69% of the direct costs for this reporting period. In addition, the average days lost per lost day case was 2.80.

About a third of the IRIS employees are required to wear safety glasses or goggles, which dramatically reduced their eye injuries (e.g., irritation, abrasion, cut, bruise, chemical burn, heat burn). However, whether the employees were wearing safety glasses as opposed to goggles was not accounted for:

	Wearing Safety Glasses/ Goggles	Not Wearing Safety Glasses/ Goggles
No. OSHA Recordable Inj.	46	483
OSHA Days Lost	25	451
Direct Costs	$2,973	$40,776
Man-Hours of Exposure	12,009,333	20,400,340
OSHA Incidence Rate	.77	4.74
OSHA Severity Rate	.42	4.42
Direct Costs Per Man-Year	$.50	$4.00

The accident reduction potential and cost effectiveness of requiring employees to wear safety glasses (different types provide more protection) or goggles would be:

1. A reduction of 7.94 non-first aid injuries per 200 employees per year.

2. A reduction of 8 days lost per 200 employees per year.

3. A reduction of $3.50 per employee per year in direct costs or a maximum reduction of $17.50 (estimating in indirect cost reductions) per employee per year. The average non-prescription safety glasses or goggles range in price from $3.50 to $8.00 a pair. Since these tend to last much longer than either gloves or safety shoes which undergo more friction, their cost effectiveness is well justified.

A major problem with requiring that employees wear safety glasses or goggles is employee acceptance. Complaints of discomfort include bad fit to where it is either chafing at points or falling off constantly, or they are too heavy, or they do not "breathe" so mist over from sweat on hot days, or that dust tend to collect on them. Therefore, when considering the type of safety glasses or goggles, not only their safety features (e.g., whether they have full or half

side shields and the diameters of the holes or fineness of the mesh) but also whether the employees will be comfortable wearing them requires careful consideration.*

The National Institute for Occupational Safety and Health (NIOSH) performed tests on 22 brands of plano safety glasses to determine which met the ANSI requirements. The results were published in February, 1977 in a technical pamphlet entitled "Tests of Glass Plano Safety Spectacles".

1. Lense and frame impact: With one exception, all of the 22 models tested by NIOSH passed the lense and frame impact tests.

2. Design features: All models with full sideshields met the eye exposure requirement. However, it was found that those spectacles without full sideshields provided limited protection to the eye from projectiles approaching from the side.

   When choosing a spectacle design, careful thought should be given to the issue of sideshields. While full sideshields provide better protection than the styles with no sideshield, their appearance and restriction of peripheral vision may make them less readily accepted by workers. A possible alternative not considered in the ANSI standard is the "flatfold" design. This design reduces the restriction of peripheral vision and has a more acceptable appearance than spectacles with full sideshields. Unfortunately, despite the advertisements' claims, they do not provide the equivalent protection of the full sideshields.

3. Refractive power: The NIOSH study also found that all models had lenses

---

*The "U.S.A. Standard Practice for Occupational and Educational Eye and Face Protection" (ANSI Z87.1-1968, revised 1977) standard should be referred to for tests on the lense and frame impact resistance and the design features that eliminate eye exposure. The refractive power, or general optical qualities of the lenses is also important for wearing comfort.

of high optical quality. This feature is especially important for people who are not used to wearing glasses, since any imperfection in refraction can cause discomfort.

One portion of the refraction test series is the prismatic power test, which measures the extent to which an object being viewed is displaced by the lense. The NIOSH researchers found that it was necessary to perform this test on pairs of lenses since it is possible to have two properly manufactured lenses of different design, thus causing a prismatic imbalance. If the imbalance is significant enough, the wearer's eyes are forced to look in slightly different directions to focus on one object. For this reason, it is important to always purchase replacement lenses in pairs.

4. Glare protection: The ANSI standard does not address protection from glare. However, for a small additional cost, photo sensitive lenses that darken in bright light and then become clear in dim light can be purchased. These lenses protect from potential accidents resulting from an employee being temporarily blinded by the sun's glare and from eye fatigue.

HEAD PROTECTION

Head injuries can be extremely costly, and therefore, a third of the IRIS employees are required to wear head protection. Various head protection in use by solid waste employees include hardhats, bump caps, and leather skull guards. Head injuries they can protect against are concussions, fractures, cuts and bruises, which can occur from falls against objects, raising up from under objects, objects falling from above (e.g., branches off truck beds, bulk containers off lifters), being struck by a fellow employee's container that was thrown or was being dumped at the same time, or striking against the vehicle during a collision.

An examination of each individual head injury as to the accident circumstances was necessary in order to eliminate head injuries that could not have been aided by the wearing of

head protection (e.g., falling from a great height, struck by a vehicle). The injury rates for wearing or not wearing head protection showed a large difference:

	Wearing Head Protection	Not Wearing Head Protection
No. OSHA Recordable Inj.	12	70
OSHA Days Lost	46	606
Direct Costs	$2,598	$34,932
Man-Hours of Exposure	12,264,928	20,144,746
OSHA Incidence Rate	.2	.7
OSHA Severity Rate	.8	6.0
Direct Costs Per Man-Year	$.42	$3.47

Therefore, the accident reduction potential and cost effectiveness of requiring employees to wear head protection (different types provide more protection) would be:

1. A reduction of 1 non-first aid head injury per 200 employees per year.

2. A reduction of 10.4 days lost per 200 employees per year.

3. A reduction of $3.05 per employee per year in direct costs, or a maximum estimated reduction of $15.25 per employee per year (counting indirect costs).

Most solid waste organizations do not require hard hats for residential collection employees. They require instead the plastic bump cap which are lighter and more comfortable to wear, and of a high visibility color. However, jobs where employees are more exposed to overhead hazards (e.g., at disposal sites, on commercial collection) may require a hardhat.*

Other considerations in the wearing of head protection is that liners can be issued during colder months for added insulation, and the suspension distance between the head and hardhat has to be adjusted correctly in order to disperse the impact optimally.

---

*The ANSI Z89.1-1969 standard entitled, "Safety Requirements for Industrial Head Protection," should be referred to for minimum safety requirements.

OTHER PERSONAL PROTECTIVE EQUIPMENT TO CONSIDER

The solid waste employee has available to him several more types of personal protective equipment, but the actual protection they afford cannot be easily measured, either because it is not available through the IRIS data or because the protection it affords is so generalized. However, all the personal protective equipment available should be discussed for advantages and disadvantages.

1. Leg protection. Two types of leg protection are available to protect against cuts to the upper leg, or thigh. One type is the leather apron and the other is chaps, which can be sewn into the pants and is mainly used in the logging industry to protect against saw cuts. Both, however, are bulky and can cause discomfort due to decreased air circulation. The chaps can be just sewn into the right side of the upper leg of the right pantleg for a right handed person, particularly to protect against glass protruding from plastic bags as they brush against the leg. The leather aprons are normally worn over the employees' uniforms. The IRIS data shows that injuries to the leg that are preventable by the use of leg protection (e.g., cuts/punctures, abrasions, infections) accounted for 4.3% of the OSHA recordable injuries, 1.8% of the days lost, and 1.5% of the direct costs. The personal protective equipment only protect the thighs while the IRIS data does not separate out to which part of the leg the injury occurred. However, even presuming that providing leg protection will only eliminate half the injuries, the injury, severity and direct costs reductions would be:

   a. A reduction of 1.7 OSHA recordable injuries per 200 solid waste employees wearing the leg protection per year.

   b. A reduction of 5.4 days lost per 200 employees per year.

c. A direct cost savings of $1.22 per employee per year, or an estimated savings of $6.10 (includes indirect costs) per employee per year.

2. Forearm protection. One means of providing forearm protection is the longer lengthed gauntlet gloves. It can protect against cuts/punctures, abrasions and infections, which occur most commonly from handling brush or handling plastic bags that have glass in them. The disadvantages of the long gauntlet glove is the bulkiness and increased sweating.

   The preventable forearm protection injuries resulted in 3.1% of the OSHA recordable injuries, .8% of the days lost, and 1.1% of the direct costs. Again, the IRIS data does not distinguish between the forearm and the upper arm. However, the injury rates for half of the injuries, days lost and direct costs above would mean reductions of:

   a. 1.2 OSHA recordable injuries per 200 solid waste employees provided with forearm protection per year.

   b. 2.54 days lost per 200 employees per year.

   c. $.92 per employee per year in direct costs. Adding in indirect cost savings, it would be $4.60.

3. High visibility clothing. Providing high visibility clothing does not necessarily mean providing extra personal protective equipment. For instance, an organization that is already planning on providing its employees with uniforms or bump caps can order bright colored ones. Other high visibility clothing items in use are traffic vests, bright colored belts, and armbands sewn into the sleeves of their uniforms. High visibility clothing is meant to prevent accidents rather than injuries, since they are good protection against traffic accidents, particularly on low visibility days or during dawn and dusk.

4. Hearing protection. Exposure to high decibel noise levels occur more frequently at landfills where heavy equipment is used. Therefore, many solid waste organizations provide their landfill employees with ear plugs or ear muffs. There is a wide selection of types and brands to choose from, but generally it is found that a well-designed muff gives better noise attenuation than an insert protector. The shapeable ear plugs do provide good protection, but they present a hygienic problem when the wearer forms and inserts the plugs with dirty hands. Also, although the initial cost is lower than other kinds of plugs, the need for daily replacement will ultimately make them less economical than other types.

5. Respiratory protection. Two types of respiratory protection, the dust mask and the respirator, serve different safety functions and are not popular with the employees because of the discomfort they cause. Therefore, the dust masks should be made available and recommended to employees exposed to dusty situations (e.g., employees working in unpaved alleys, at the landfill) but not necessarily made mandatory. It should be noted that they do not provide protection against toxic substances.

   Respirators, on the other hand, should be used with caution as they are ineffective if not used and maintained properly. They may be appropriate at the landfill or incinerator stations where the employees are exposed to toxic fumes, vapors, or smoke. However, authorities recommended that they be used for back up or emergency protection only. In addition, they are very uncomfortable to wear and employee acceptance of them is very low.

6. Support belts. They are wide canvas belts which provide lumbosacral support.

They are available with steel braces or metal stays, but these are bulky and tend to restrict motion. The kinds made without the stays are more comfortable but also provide less support. Both styles can be very hot to wear during warm weather.

Once a person has experienced a back injury, he is more susceptible to recurring injury because his spinal structure has been weakened. Therefore, it is a good idea for workers who have experienced previous lower back injuries to consider wearing the belts, at least when they feel more fatigued than usual.

7. Uniforms, general clothing. Solid waste safety professionals consider the uniform as one of the "musts" in personal protective equipment for a solid waste employee. Long pants are a must, regardless of the climate, to protect the employees' legs from injuries such as cuts, scratches, acid burns, sunburn, and the ever-present possibility of infectious disease. Long-sleeved shirts are desirable for the same reasons, but most organizations permit short sleeves during warm weather. Sleeveless shirts, such as tank tops, should never be acceptable. Coveralls or jumpsuits are also in use but can be too warm during the summer since they afford less air circulation. While clothing should be comfortable and not too tight, it should not be so loose fitting that it catches on activated equipment.

8. Raingear. The choosing of raingear appropriate for the climatic conditions at a solid waste organization includes choosing the type of material (e.g., rubber, vinyl) and the style (e.g., windbreaker, hooded jacket and pants, long coat) for whether warmth or aeration is desired. The fit of the raingear should be loose and comfortable over the uniform, including jackets worn

during winter. Since rainy weather is low in visibility, the raingear should be of a high-visibility color such as yellow. If the rubber boots provided are overboots, they should be loose enough to fit over the safety shoes. Raingear is considered standard personal protective equipment at most organizations. They also increase employee morale by providing warmth and dryness on rainy days and are well accepted.

9. Shoulder and hip pads. They provide chafing protection to the shoulders and hips of collectors that carry intermediate containers from the backyard that can be up to 60 gallons large. They are not necessary for organizations that provide wheeled carts for the intermediate containers.

10. Sweat bands. They provide added comfort on warm days, as they keep sweat from dripping down into the employees' eyes and safety glasses. They are generally well accepted by the employees even though they are not required to wear them.

EXHIBIT 22

THE OCCURRENCE OF BACK STRAINS (OVEREXERTIONS*) IN RELATION TO THE AGE AND EXPERIENCE OF THE EMPLOYEE

Back strains that develop as a result of overexertions, although the most common injury to solid waste collectors**, is the least understood. To obtain an overview of the problem, a task/hazards analysis of the back strains was performed (FIGURE 1). It relates specific injury reduction measures that affect the employees' working conditions (e.g., employee training, container regulations and operational changes) to hazards that the solid waste collector encounters in his job. The high risk task was "lifting container", and the high risk factor was "heavy container".

However, other factors can contribute to back strains from overexertion. In particular, the employee characteristics of age and experience have long been suspect as contributing factors. To examine these two factors, IRIS developed special computer printouts to analyze the injury rates for the various age and experience groupings for the back strains from overexertion.

FIGURE 1 shows the injury rates for the back strains from overexertion by the age of the employee. The man-hours of exposure used was only for the collection division, and the averages for the back strains from overexertion is also shown.

---

*The ANSI Z16.2-1972 (R1969) standard entitled, "Method of Recording Basic Facts Relating to the Nature and Occurence of Work Injuries", defines the accident type of overexertion as "nonimpact cases in which the injury resulted from excessive physical effort, as in lifting, pulling, pushing, wielding, or throwing the source of injury".

**During the IRIS reporting period of December 1975 through June 1977, overexertion accidents that resulted in back strains accounted for 12% of the total OSHA recordable injuries, 18% of the days lost, and 16% of the direct costs. These comprised a large part of the total back strains (64%, 56%, and 53% respectively) which also included back strains that resulted from slips and falls, sudden body reactions (e.g., catching a falling container), and repeated trauma (e.g., developed at the end of the day rather than from a specific incident).

FIGURE 1

OVEREXERTIONS RESULTING IN BACK STRAINS*

PRELIMINARY TASK/HAZARD ANALYSIS

TASK			HAZARDS			POSSIBLE COUNTERMEASURES		
Percent of Total			Percent of Task					
% No. Inj.	% Days Lost	% Direct Costs	% No. Inj.	% Days Lost	% Direct Costs	EMPLOYEE TRAINING	CONTAINER REGULATIONS	OPERATIONAL CHANGES
1. LIFTING CONTAINER			a. Heavy container			Test weight. Tag and leave heavy containers or ask aid of coworker. Train on proper lifting techniques and team lifting coordination.	Reduce and/or enforce container weight limits. Public acceptance program.	Change to mechanical or semi-mechanical collection. Back X-ray.
15%	15%	14%	68%	66%	67%			
% of Back Strains								
49%	45%	50%						
			b. Large container (tote barrel, oil drum, cart, etc.)			Do not overfill intermediate container. Test weight. If heavy, obtain aid or tag and leave. Train on proper lifting techniques and team lifting coordination.	Enforce container size limits.	Change from backyard to curbside or to mechanical or semi-mechanical collection. Provide wheeled carts for intermediate containers.
			13%	10%	9%			
			c. Handled with coworker			Team lifting coordination.		Change to mechanical or semi-mechanical collection.
			2%	2%	3%			

*IRIS reporting period was December 1975 to June 1977. It includes 6,321 OSHA recordable injuries, 49,732 days lost and $2,629,070 in direct costs. Of these figures, 761 OSHA recordable injuries (12%), 9,030 days lost (18%) and $411,060 in direct costs (16%) were incurred from back strains that occurred as employees were handling container or waste.

OVEREXERTIONS RESULTING IN BACK STRAINS

PRELIMINARY TASK/HAZARD ANALYSIS

TASK				HAZARDS				POSSIBLE COUNTERMEASURES		
	Percent of Total				Percent of Task					
	% No. Inj.	% Days Lost	% Direct Costs		% No. Inj.	% Days Lost	% Direct Costs	EMPLOYEE TRAINING	CONTAINER REGULATIONS	OPERATIONAL CHANGES
2. LIFTING TO DUMP CONTAINER	11%	10%	9%	a. Heavy container	56%	65%	59%	Test weight prior to lifting. Tag and leave heavy containers. Train on proper lifting techniques. Obtain aid of coworker if heavy or awkward.	Reduce and/or enforce container weight limits. Public acceptance campaign.	Change to mechanical or semi-mechanical collection. Back X-ray.
	% of Back Strains									
	26%	22%	20%							
				b. Large container	14%	14%	12%	Do not overfill intermediate container. Test weight, and if heavy, obtain aid or tag and leave. Train on proper lifting techniques and team lifting. Do not throw.	Enforce container size limits.	Change from backyard to curbside or to mechanical or semi-mechanical collection.
				c. Twisting/turning	23%	25%	26%	Proper lifting techniques.		Change to mechanical or semi-mechanical collection. Back X-ray.
				d. Throwing plastic bags	4%	2%	2%	Not allow.		Same as above.

OVEREXERTIONS RESULTING IN BACK STRAINS

PRELIMINARY TASK/HAZARD ANALYSIS

TASK				HAZARDS				POSSIBLE COUNTERMEASURES		
	Percent of Total				Percent of Task					
	% No. Inj.	% Days Lost	% Direct Costs		% No. Inj.	% Days Lost	% Direct Costs	EMPLOYEE TRAINING	CONTAINER REGULATIONS	OPERATIONAL CHANGES
3. DUMPING CONTAINER	11%	8%	7%	a. Heavy container	44%	47%	32%	Do not twist or turn, especially do not throw.	Reduce and/or enforce container weight limits.	Change to mechanical or semi-mechanical collection. Back X-ray.
% of Back Strains	10%	11%	9%	b. Large container	13%	16%	21%	Do not overfill intermediate containers.	Enforce container size limits.	Change from backyard to curbside or to mechanical or semi-mechanical collection.
				c. Handled with coworker	4%	3%	3%	Team coordination training.		Same as above.
4. PUSHING OR PULLING BULK CONTAINER	4%	6%	6%	a. Handled with coworker	16%	8%	10%	Team pushing/pulling training. Push rather than pull.	Require level surface for container access.	
% of Back Strains	5%	11%	10%							
5. LIFTING TO DUMP WASTE	4%	2%	2%	a. Furniture, appliances	24%	35%	56%	Team coordination training.	Require bulky items to be picked up by separate collection.	Provide dolly and hydraulic lift gate on truck or change to mechanical collection. Require two man operation.
% of Back Strains	4%	4%	4%	b. Handled with coworker	14%	12%	15%	Team coordination training.		

OVEREXERTIONS RESULTING IN BACK STRAINS

PRELIMINARY TASK/HAZARD ANALYSIS

TASK			HAZARDS			POSSIBLE COUNTERMEASURES		
Percent of Total			Percent of Task					
% No. Inj.	% Days Lost	% Direct Costs	% No. Inj.	% Days Lost	% Direct Costs	EMPLOYEE TRAINING	CONTAINER REGULATIONS	OPERATIONAL CHANGES
6. CARRYING CONTAINER			a. Heavy container			Tag and leave heavy containers. Train on proper carrying techniques. Do not overfill intermediate containers.	Reduce and/or enforce container weight limits. Public acceptance campaign.	Provide wheeled carts for intermediate containers.
7%	8%	7%	37%	30%	28%			
% of Back Strains								
2%	2%	2%	b. Tote barrels			Do not overfill intermediate containers.		Provide wheeled carts for intermediate containers. Change from backyard to curbside or to mechanical or semi-mechanical collection.
			26%	27%	30%			
7. LIFTING WASTE			a. Furniture, appliances			Team coordination training.	Require bulky items to be picked up by separate collection.	Provide dolly and hydraulic lift gate on truck or change to mechanical collection. Require two man operation.
2%	1%	1%	29%	76%	72%			
% of Back Strains								
2%	1%	2%	b. Handled with coworker			Team coordination training.		
			18%	14%	10%			

FIGURE 2

COLLECTION DIVISION OVEREXERTIONS (BACK STRAINS) INVOLVING CONTAINER OR WASTE BY THE AGE OF THE INJURED EMPLOYEE

	OSHA Incidence Rate	OSHA Lost Workday Cases Rate	OSHA Severity Rate	Avg. Direct Cost per OSHA Record-able Inj.	Direct Cost per Man-Year	% of Total Collection Man-Hours
<20 YEARS OLD	7.12	4.75	52	$282	$20	2.7%
20-24 YEARS OLD	8.81	6.86	79	424	37	14.4
25-29 YEARS OLD	9.07	7.25	90	455	42	15.9
30-34 YEARS OLD	6.33	5.16	60	420	27	12.5
35-39 YEARS OLD	5.14	4.33	84	745	38	11.9
40-44 YEARS OLD	4.05	3.41	83	902	37	11.3
45-49 YEARS OLD	4.40	3.81	72	759	33	11.0
50-54 YEARS OLD	2.42	2.18	33	770	19	10.0
55-59 YEARS OLD	1.96	1.59	16	436	9	6.6
60-64 YEARS OLD	1.74	1.74	14	400	7	2.8
>64 YEARS OLD	0	0	0	0	0	.6
OVERALL RATES	5.70	4.63	67	$543	$31	

First, the overall injury rates (bottom line) show that the back strains from overexertion:

- occurred to an average of six out of 100 collectors a year.
- resulted in lost time 81% of the time.
- resulted in an average of 67 days lost per 100 collectors a year, or .67 days lost per collector per year.
- cost an average of $543 each in direct cost (e.g., medical costs, wage continuation benefits, disability payments).

- cost $31 per collector per year on the payroll.

- resulted in an average of 14.5 days lost per lost workday case.

The injury rates for the age groupings indicate that the incidence of back strains from overexertion was much higher for younger collectors, peaking in the age group of "25-29 years old"; then it decreased steadily for the older age groupings. However, examining the severity rates, the peak still occurred at the "25-29 years old" group but showed the second peak at a slightly older age group, "35-39 years old". This pattern was again repeated for the direct costs per man-year rates.

One explanation for why the older collectors appear to have a lower incidence of back strains is that, with seniority, the older employees have less exposure to handling containers, as they are likely to be the drivers in the two and three man crews and infrequently leave the cab.

FIGURE 3 gives the average injury rates for back strains that resulted from overexertion by the experience of the injured employee. Experience, however, refers only to the length of time the employee was employed by the collection division, and does not include what experience the employee might have had previous to joining the collection division (e.g., transferred to parks department then back, worked previously with collection division and quit, etc.). Even so, the FIGURE indicates that the newly hired employee (less than one month's experience) sustained a 50% higher incidence of back strains when handling containers or waste. In fact, the rates remained high up through five years of experience.

One out of seven of the newly hired employees can expect to receive a back strain within the first month on the job. Because back strains are the most common type of injury in this industry, along with being relatively costly, the safety program in use at a solid waste organization should address this problem. Target injury reduction measures should include:

- employee training on container handling techniques

- container regulations (e.g., container weight limits)

- pre-employment physicals

- operational changes to reduce the amount of lifting required.

FIGURE 3

COLLECTION DIVISION OVEREXERTIONS (BACK STRAINS) INVOLVING CONTAINER OR WASTE BY THE EXPERIENCE OF THE INJURED EMPLOYEE

	OSHA Incidence Rate	OSHA Lost Workday Cases Rate	Severity Rate	Average Cost per OSHA Recordable Injury	Average Cost per Man-Year	% of Total Collection Man-Hours of Exposure
<1 MONTH	15.68	11.10	101	$256	$40	1.3%
1-2 MONTHS	9.56	7.51	154	738	71	1.3
2-3 MONTHS	9.37	7.21	89	402	38	1.2
<3 MONTHS	11.64	8.67	115	426	50	3.8
3-6 MONTHS	7.58	4.36	41	323	24	3.7
6-12 MONTHS	6.33	4.78	16	409	26	7.2
1-2 YEARS	9.37	7.32	100	461	43	8.8
2-5 YEARS	9.09	7.72	99	502	46	17.5
5-10 YEARS	6.28	5.32	80	548	34	23.2
>10 YEARS	2.78	2.36	50	899	25	33.0

EMPLOYEE TRAINING

The injury rates illustrate the need for effective employee training in the proper lifting and dumping techniques for the inexperienced employees and periodic retraining for the experienced employees. As the chart on the back strains indicate, the two major tasks the employees were performing at the time of their injury were "lifting container" (49%) and "dumping container" (26%). In at least 50% of the cases, the container was heavy. Testing the container prior to lifting and dumping it is essential in eliminating the element of surprise from this operation. By knowing ahead of time that the container is heavy, the employee can exercise more caution in lifting and

dumping. Simply looking at the waste in the container is not a good measure of its weight, since the container could have rocks, newspapers, water, etc. on the bottom.

The three areas of employee training that should be emphasized are: testing the container, lifting the container, and dumping the container. The following are training guidelines developed for the safety manual on solid waste collection, which SAFETY SCIENCES is performing for the National Science Foundation, on the three training areas.

The training should be performed in the office rather than on the route, or on the job. It can be supplemented with the use of slides and charts on the proper techniques, hazards to watch out for, and a discussion of the spine and the nature of back strains. In addition, actual demonstrations of the correct procedures should be presented with the use of containers. Containers with varying weights could be made available for the employees to "feel" the difference in weights, and the instructor should have the employees perform the three tasks until they can do it correctly unconsciously.

As discussed previously, training is not only important for the inexperienced employees, but also for the experienced employees (retraining) who may have fallen into bad habits. The experienced employees should be retrained at least once a year, but preferably semi-annually. Additionally, another group of target employees are the ones who sustained a back injury while performing these tasks. They should also be retrained before they return to the job, especially since once a person has sustained a back injury, he may be more susceptible to recurrence of the injury because of a weakened musculoskeletal system.

Another key component to an effective training program is supervision to ensure that the correct techniques are actually being used on the job. The supervisor should be responsible for the safe performance of his employees. He should point out incorrect or unsafe practices and show the employees the correct methods immediately upon observing unsafe acts. Another effective means of pointing out unsafe practices (which can be used in retraining) is to take candid photographs or videotapes of the employees performing unsafe acts. The employees can also be asked to evaluate themselves, in this manner, making it an interactive training program. With an effective safety training program, employee morale rises, thus injuries are reduced and productivity increases.

FIGURE 4

TESTING AND LIFTING CONTAINERS

TESTING

1. Never use the hand or feet to push protruding waste back into the container. Use the container lid.

2. Tip the container away from you with your gloved hand to judge the container's weight. The hand is more sensitive to judging weight than the knee. The weight of cardboard boxes and plastic bags should also be tested before lifting.

3. Keep hands out of the container while testing (to avoid cuts or contact with infectious material).

4. If the container is too heavy, lighten the load or get help.

5. If the container exceeds your organization's container weight limit, tag and leave the container.

NOTE: There is little doubt that lifting moderate to heavy loads does create excessive mechanical stresses on various components of the musculoskeletal system. However, a report published in 1962 by the International Labor Office (ILO) states that proper lifting techniques can reduce the risks of back injury due to lifting.

LIFTING

1. Be alert to help a fellow employee with a load that is too heavy for one man to lift.

2. Do not throw or swing containers or bags.

3. Keep feet about shoulder width apart, or have one foot in front of the other for balance, and face the direction of travel.

4. Keep knees bent and back as straight as possible without being uncomfortable.

TESTING AND LIFTING CONTAINERS (Continued)

5. Tilt container and firmly grasp the bottom edge. Use both hands to lift and carry the container.

6. Draw the container close to the body and lift with a steady, continuous motion. Be especially cautious if the waste is loosely packed because the weight may shift.

7. Never twist when lifting. To avoid twisting, point forward foot in the direction to be traveled. The body will follow without twisting.

8. Do not try to catch a falling container, and keep hands and feet clear of the container if it starts to fall.

9. Do not carry more than one container at a time.

10. Do not lift containers while standing on the riding or hopper step.

11. If waste starts to fall, do not try to catch it. Fallen waste should be picked up with a dustpan and broom.

12. Be alert to faulty bottoms on cardboard boxes.

13. If a container is heavier than the required weight limit, in damaged condition, or in any way in violation of the container regulations, tag it, and do not collect.

14. Tag and leave bulky waste, if there is a separate bulky waste collection.

FIGURE 5

TEAM LIFTING AND DUMPING
(bulky waste or heavy container)

NOTE: Encourage the employees to ask a co-worker to help handle a particularly heavy or bulky container. There are problems associated with coordination between co-workers in a mutual effort. Therefore, specific training in team lifting and dumping is needed. Team coordination training is particularly important for frequent two-man operations such as in handling bulky items and commercial bins.

1. Choose a team leader who will give the signal to lift in unison.

2. Lift with an even, steady motion, without twisting.

FIGURE 6

DUMPING INTO HOPPER

1. Avoid twisting the body. Keep arms as close to the body as possible. Keep feet firmly planted on the ground, parted for balance, and have a firm grip on the container.

2. Do not throw or swing containers or bags.

3. Plastic bags should not be held close to the body.

4. Hold the container low, even resting it on the hopper sill. Besides causing strains, holding the container high to dump also increases the risk of waste bouncing out of the container or the hopper.

5. Roll the container on the hopper sill, rather than shake it, to loosen the waste. Be careful of hand position to prevent pinching the hand between the container and the sill.

6. Do not overload the hopper.

7. Extreme caution is needed when handling such easily shattered items as television tubes and fluoresent light bulbs.

8. Do not dump while the packer panel is operating. Stand clear of the back of the truck during the packing cycle.

9. Any spillage that occurs while dumping waste into the hopper should be picked up immediately with a broom and dustpan.

10. Watch out for other crewmen. Coordinate movements.

11. IF A CONTAINER OR OBJECT IS TOO HEAVY, LIGHTEN THE LOAD OR GET HELP.

12. Make a conscious effort not to rest hands on hopper sill. It is easy to do this unconsciously, thus risking getting caught by the packer panel.

13. Let falling containers go. Do not try to catch them.

14. Lumber, Christmas trees, pipes or other long waste should be placed in a position parallel to the packer panel. They can swing around when packing if placed improperly.

15. Do not dump the container by dropping it into the hopper and then lifting it out.

CONTAINER REGULATIONS

Another means of reducing back strains is to regulate the objects that the employees are handling (e.g., containers and waste). A solid waste organization's container regulations should include specific limits for the size and weight of the containers as well as acceptable and unacceptable containers and waste.

Specific container conditions that can contribute to overexertions include the container's:

- Weight. IRIS recommends a container weight limit (container and contents) of 60 pounds.

- Size. Too large of a container is awkward to handle, increasing the risk of back strains. 30-32 gallons is recommended for the container size, and cardboard boxes should be no larger than 2'x3'x3'.

- Type. The top of the container should have a larger diameter than the bottom so that the contents pour out easier. Therefore, oil drums are not recommended as acceptable containers. The empty oil drum's weight is far heavier than a plastic or metal container, and a 55 gallon oil drum is very awkward to handle.

However, container regulations are useless unless they are enforced. The employees should be able to tag and leave an overly heavy or large container. Repeated violators should be given citations and fined.

In conjunction with an active enforcement program, the container regulations should be made clear to the customers. New customers can be informed by several means. The solid waste organization should have a flyer, or brochure, describing the container regulations for the supervisors to leave with the new customers, or the flyer could be mailed to the new customers upon them calling to start up service. Some organizations also send notices describing happenings in the solid waste department (e.g., changes in policy) in the municipality's water bills. Any major changes in an organization's container regulations, such as not allowing cardboard boxes, should be accompanied by extensive advertising through the mail, in local newspapers and on the radio and television.

PRE-EMPLOYMENT PHYSICALS

Another variable that is a contributing factor to back strains is the employee's physical condition. Collecting 10-12 tons of waste a day requires the collector to be in very good physical condition. The solid waste organization can screen the applicants for certain qualifications prior to hiring an employee. Key tests to perform in a pre-employment physical include:

- Back x-rays. Although these are often inconclusive in determining previous back injury, they can spot the small percentage of congenital back defects that may result in high severity and costs.

- Ability to do sit-ups. Because the abdominal muscles are used to perform lifts, they should be in good condition.

OPERATIONAL CHANGES

Operational changes refer to overall work pattern changes rather than specific job task changes. Operational changes that lead to the reduction of overexertion back strains while collecting waste require reducing the amount of lifting required by the employee. Therefore, introducing mechanical means to lift and dump the containers is the best method.

There are several types of equipment available with varying degrees of automation:

- Lift mechanism that attaches to the back of rear-end loaders used in conjunction with providing customers with wheeled containers. The collection is curbside, and the collector wheels the container to the rear of the truck, attaches it to the lift mechanism and operates the controls for lifting and dumping it. Some systems in use go under the names of Poly-Kart and Mobile Toter.

- Lift mechanism attached to a side loader (e.g., Rapid Rail). Again, the containers are provided by the

solid waste organization, 80 gallons for single dwelling housing and 300 gallons for four family alley collection (container not wheeled). The collector has to maneuver the container once in a while if it is turned the wrong way or if the container falls into the hopper.

- Articulating arm attached to a front end or side loader that picks up 80 and 300 gallon containers (e.g., Godzilla).

EXHIBIT 23

CREW TYPE VARIATIONS IN SIZE, TYPE OF SHIFT, AND POINT OF COLLECTION AND THEIR EFFECTS ON INJURY RATES

Two unresolved safety questions plaguing solid waste managers who are weighing alternative collection methods in an effort to reduce their high injury rates are, "Which system is safer and by how much?"

In answering these questions, the three main crew type factors of size, type of shift and point of collection were examined. Since just examining each factor individually was not very meaningful, two factor and three factor analyses were performed.

For the two factor analyses, the IRIS data from October 1976 through June 1977* was used to determine injury rates for the various collection systems. The two factor combinations are listed below along with their percentage of the total collection man-hours of exposure of 13,134,081:

- one man task collection crews (4%)
- two man task collection crews (16%)
- three man task collection crews (39%)
- one man hourly collection crews (6%)
- two man hourly collection crews (4%)
- three man hourly collection crews (15%)
- one man commercial collection crews (2%)
- two man commercial collection crews (5%)
- one man curbside/alley collection crews (2%)
- two man curbside/alley collection crews (9%)
- three man curbside/alley collection crews (33%)
- three man backyard collection crews (1%)

---

*Although IRIS collected crew type information as part of the injury data since December 1975, the man-hours of exposure was not obtained until October 1976.

- commercial task collection crews (5%)
- curbside/alley task collection crews (43%)
- backyard task collection crews (12%)
- commercial hourly collection crews (3%)
- curbside/alley hourly collection crews (14%)

The injury rates tables are given at the back of this section. However, the tables below summarize the lost workday cases rates for the two factor analyses:

Type of Shift	Crew Size		
	One	Two	Three
Task	29	45	28
Hourly	11	35	29

Point of Collection	Crew Size		
	One	Two	Three
Commercial	14	19	-
Curbside/Alley	51	61	30
Backyard	-	-	51

Point of Collection	Type of Shift	
	Task	Hourly
Commercial	19	10
Curbside/Alley	31	32
Backyard	42	-

These rates indicated that 1) smaller crew sizes result in higher lost workday cases, 2) hourly collectors had lower or nearly equal incidence rates, and 3) backyard collection had a much higher rate than curbside or alley collection.

However, when the injury rates analyses was taken one step further to compare three factor cross tabulations, the following ranking of the residential collection systems was derived for the highest to lowest in OSHA incidence rates:

FIGURE 7

AVERAGE INJURY RATES FOR RESIDENTIAL COLLECTION SYSTEMS

	OSHA Incidence Rate	OSHA Lost Workday Cases Rate	OSHA Severity Rate	Avg. Direct Cost Per OSHA Recordable Inj.	Direct Cost Per Man-Year	Percentage Man-Hours of Exposure*
1. Two man, hourly, curbside	305	72	510	$133	$404	2%
2. Three man, task, backyard	92	50	329	188	174	1%
3. Two man, task, curbside	88	56	696	437	396	8%
4. One man, task, curbside	74	41	725	473	349	2%
5. Three man, hourly, curbside	44	30	330	479	211	9%
6. Three man, task, curbside	41	25	351	403	165	30%
7. One man, hourly, curbside	25	16	217	507	128	2%

*Does not total 100% because commercial collection is not represented nor other collection systems that mixed backyard and curbside or alley.

The two man collection systems were both much worse in rates than the three man collection systems, but the hourly collectors were no longer lower in rates from the task or incentive collectors (except for the one man collection). Backyard for the three man collection was still much worse than curbside, but the reduction in crew size from three to two for curbside collection still appears to raise the injury rates. The fact that two man hourly collection was much higher in this table than the previous table is because the commercial collection injuries and man-hours of exposure were included in the previous table's rates, thus lowering the rates because commercial collection had lower injury rates.

In using this table to estimate the injury and cost reductions of changing from one system to another, understanding the injury rates is necessary.

1. OSHA incidence rate is roughly equivalent to the number of non-first aid injuries expected per 100 full time employees on the payroll a year.

2. The OSHA lost workday cases rate is roughly equivalent to the number of lost workday cases expected per 100 full time employees on the payroll a year.

3. The OSHA severity rate is roughly equivalent to the number of lost workdays expected per 100 full time employees on the payroll a year.

4. The direct cost per man-year rate is roughly equivalent to what it is costing an organization per residential collector per year in direct costs (e.g., medical, wage continuation, court settlements, disability benefits) for injuries.

Therefore, if a solid waste organization that had three man task backyard collection wanted to know how their injury rates would be affected when they change to one man task curbside collection, the table indicates that the expected reductions are:

- 18 non-first aid injuries per 100 employees per year
- 9 lost workday injuries per 100 employees per year

but an increase is expected for the severity and direct costs*:

- of 396 days lost per 100 employees per year
- of $175 per employee per year in direct costs.

---

*Several serious accidents occurred in this collection system that greatly affected their injury severity and direct cost rates.

FIGURE 8

AVERAGE INJURY RATES
FOR ONE MAN CREWS
BY TYPE OF SHIFT

		TASK	HOURLY
1.	OSHA INCIDENCE RATE	58	17
2.	OSHA LOST WORKDAY CASES RATE	29	11
3.	OSHA SEVERITY RATE	729	145
4.	AVERAGE COST PER OSHA RECORDABLE INJURY	$1,103	$535
5.	DIRECT COST PER MAN-YEAR	$637	$91

FIGURE 9

AVERAGE INJURY RATES
FOR TWO MAN CREWS
BY TYPE OF SHIFT

		TASK	HOURLY
1.	OSHA INCIDENCE RATE	72	140
2.	OSHA LOST WORKDAY CASES RATE	45	35
3.	OSHA SEVERITY RATE	568	272
4.	AVERAGE COST PER OSHA RECORDABLE INJURY	$425	$151
5.	DIRECT COST PER MAN-YEAR	$308	$212

FIGURE 10

AVERAGE INJURY RATES
FOR THREE MAN CREWS
BY TYPE OF SHIFT

		TASK	HOURLY
1.	OSHA INCIDENCE RATE	49	42
2.	OSHA LOST WORKDAY CASES RATE	28	29
3.	OSHA SEVERITY RATE	367	408
4.	AVERAGE COST PER OSHA RECORDABLE INJURY	$338	$561
5.	DIRECT COST PER MAN-YEAR	$166	$238

FIGURE 11

AVERAGE INJURY RATES
FOR ONE MAN CREWS BY
TYPE OF COLLECTION

		COMMERCIAL	CURBSIDE/ ALLEY
1.	OSHA INCIDENCE RATE	25	89
2.	OSHA LOST WORKDAY CASES RATE	14	51
3.	OSHA SEVERITY RATE	653	844
4.	AVERAGE COST PER OSHA RECORDABLE INJURY	$4,109	$482
5.	DIRECT COST PER MAN-YEAR	$1,036	$428

FIGURE 12

AVERAGE INJURY RATES
FOR TWO MAN CREWS BY
TYPE OF COLLECTION

		COMMERCIAL	CURBSIDE/ ALLEY
1.	OSHA INCIDENCE RATE	30	132
2.	OSHA LOST WORKDAY CASES RATE	19	61
3.	OSHA SEVERITY RATE	311	681
4.	AVERAGE COST PER OSHA RECORDABLE INJURY	$563	$305
5.	DIRECT COST PER MAN-YEAR	$171	$404

FIGURE 13

AVERAGE INJURY RATES
FOR THREE MAN CREWS BY
TYPE OF COLLECTION

		CURBSIDE/ ALLEY	BACKYARD
1.	OSHA INCIDENCE RATE	50	94
2.	OSHA LOST WORKDAY CASES RATE	30	51
3.	OSHA SEVERITY RATE	377	335
4.	AVERAGE COST PER OSHA RECORDABLE INJURY	$373	$188
5.	DIRECT COST PER MAN-YEAR	$179	$177

FIGURE 14

AVERAGE INJURY RATES FOR TASK (INCENTIVE) SHIFT BY TYPE OF COLLECTION

		COMMERCIAL	CURBSIDE/ ALLEY	BACKYARD
1.	OSHA INCIDENCE RATE	31	50	57
2.	OSHA LOST WORKDAY CASES RATE	19	31	42
3.	OSHA SEVERITY RATE	461	415	365
4.	AVERAGE COST PER OSHA RECORDABLE INJURY	$1,467	$412	$356
5.	DIRECT COST PER MAN-YEAR	$448	$206	$203

FIGURE 15

AVERAGE INJURY RATES FOR HOURLY SHIFT BY TYPE OF COLLECTION

		COMMERCIAL	CURBSIDE/ ALLEY
1.	OSHA INCIDENCE RATE	15	77
2.	OSHA LOST WORKDAY CASES RATE	10	32
3.	OSHA SEVERITY RATE	151	321
4.	AVERAGE COST PER OSHA RECORDABLE INJURY	$774	$276
5.	DIRECT COST PER MAN-YEAR	$119	$213

EXHIBIT 24

HOW DIFFERENCES IN WORKER'S COMPENSATION POLICIES AND WAGE CONTINUATION BENEFITS AFFECT THE INCIDENCE OF LOST TIME INJURIES

With the increasing emphasis towards providing 100% wage continuation benefits (through the use of worker's compensation, injury leave, sick leave, vacation leave, and permanent disability settlements) for the disabled worker, solid waste managers, as indeed all managers, are concerned that it may have an adverse effect. They suspect that providing increased benefits will encourage more employees to incur lost time injuries as well as increase how long employees are off work for on-the-job injuries. For instance, some people think there is "cheating" occurring, since the employees have less incentive to return on the third day of being off if their organization's wage continuation benefits do not reimburse them for the first three days of the accident until after the third work day (i.e., a retroactive period of 3 days).

There is some evidence to support this claim. Recent lost workday cases incidence rate increases for Federal employees may be attributed to a legislative easing of eligibility requirements for Federal worker's compensation which occurred in 1974. The lost workday cases incidence rates nearly doubled for calendar year 1975 from 1974 (2.3 vs. 1.3). This is in variance with the general industry trends of a constant lost workday cases incidence rate for the same time period.

Therefore, if "cheating" is occurring, what one would expect to see in the data is that IRIS users with the most generous wage continuation benefits have more lost workday cases than IRIS users with less generous wage continuation benefits.

To examine this phenomenon, the lost time injuries of the IRIS users were compared, based on their differences in wage continuation benefits. Only the figures for 1976 were used, to allow time for the cases to close. The factors under consideration were:

1. Percentage of lost time injuries vs. days lost.

2. Lost workday cases rates vs. days lost.

On the whole, there does not appear to be much difference in injury rates between the IRIS users that provided full benefits versus those that provided partial wage continuation benefits.

Wage continuation benefits for on-the-job injuries can be derived from several general sources, depending on the organization's wage continuation policy, to provide partial or full compensation for lost wages due to injury. Wage continuation policies differ from organization to organization because of state Worker's Compensation policies concerning waiting periods, retroactive periods, maximum percentage of compensated wages, etc. as well as whether the organization provides industrial or injury leave benefits. Brief descriptions of the most to the least generous of the wage continuation benefits provided by the 84 IRIS users follows:

Full benefits

- 250 days of injury leave for each accident with no waiting period. (16% of the IRIS users.)

- Can use injury leave for the waiting period before Worker's Compensation coverage and can use injury leave to add to Worker's Compensation payment to make up to 100% of the employee's regular wages. (14% of the IRIS users.)

Partial benefits

- Can use accrued sick leave for the waiting period before Worker's Compensation coverage and can use sick leave to add to Worker's Compensation payment to make up to 100% of the employee's regular wages. No injury leave provided. (17% of the IRIS users.)

- Can only use accrued sick leave for the waiting period before Worker's Compensation coverage. No injury leave provided. (12% of the IRIS users.)

- Can use injury leave for the waiting period before Worker's Compensation coverage but cannot use it to supplement the Worker's Compensation payments. (17% of the IRIS users.)

- Can only use accrued vacation leave for the waiting period before Worker's Compensation coverage. No injury leave provided. (5% of the IRIS users.)

- Cannot use sick leave or vacation leave for the waiting period prior to Worker's Compensation coverage and the Worker's Compensation usually only compensates for two-thirds of the regular wages. (7% of the IRIS users.)

There can be wide variations in the Worker's Compensation policies, also:

- Three to eight days waiting period (i.e., before an injury can be covered by Worker's Compensation).

- Retroactive period can begin the end of the waiting period to 82 days after the waiting period. The average time between the waiting period and the retroactive period was less than 20 days (69%). The retroactive period is the minimum time off due to an on-the-job injury before the employee can be compensated for the waiting period.

- Compensates for 50% to 90% of the injured employee's regular wages.

In the three following FIGURES, the IRIS users' wage continuation policies were divided into five different categories. The days lost shown were only compuated up to 21 work days lost, but injuries did result in more than 21 days lost. However, most of the IRIS users had a retroactive period for Worker's Compensation of 14 or 21 calendar days, and it was therefore felt that to include 21 workdays would encompass any observable trends for the 21 days retroactive period.

The five wage continuation categories and their representative man-hours of exposure were:

1. 100% benefits (has injury leave and supplement). The expected trend is that this category would have more incentive to have lost workday cases since the injured employees would not incur any loss of wages no matter how long they are off work due to on-the-job injuries. (3,005,400 man-hours of exposure.)

2. Has injury leave but no supplement after 7 days. In other words, the injured employee receives 100% of his wages for the work days after his injury until 7 calendar days after when Worker's Compensation takes over, then he only receives about two-thirds of his regular wages. Therefore, the expected trends would be to see a sharp reduction in lost workday cases after four or five work days lost (7 calendar days). (4,638,246 man-hours of exposure.)

3. Has injury leave but no supplement after 3 days. Same as above but receives an average of two thirds of his wages after 3 calendar days.

Therefore, the expected trends would be a sharp reduction in lost workday cases after one to three days (depending on what day of week the injury occurred the three calendar days for the waiting period can include one to three work days). (2,398,488 man-hours of exposure.)

4. No injury leave the first 3 days. However, for many of these users, the employees can use their accrued sick leave to pay for their waiting period work days not covered by Worker's Compensation. In addition, they may or may not be allowed to use sick leave to add to their Worker's Compensation payment to provide 100% wage benefits. Therefore, the lost workday cases trends expected would be that they would be reluctant to use their sick leave and would try to return to work as soon as possible, and the number of injuries that incurred more than three days lost would be expected to be lower. (686,788 man-hours of exposure.)

5. No injury leave, 7 days waiting period for Worker's Compensation. This category is basically the same as for the above category, except that since Worker's Compensation is not applicable until 4 days later than the above category, there should be a noticeable difference between the two curves in days three through five since the employees would be reluctant to use too many sick days. (4,773,308 man-hours of exposure.)

The following three FIGURES will be examined for the expected injury trends discussed above for the five categories.

FIGURE 1

This FIGURE shows close correlation for all five categories with minor differences. The general shape of the curves, with a high percentage of the lost workday cases resulting in fewer days lost and the shape of the curves leveling off for high days lost, follows expectations. Variations in the curves can more easily be seen in the first five days lost.

Examining this first part of the curve, several explanations may account for the variations:

- Curves #4 and #5 are steeper than the other three, particularly for one day lost cases. Since these injured employees would have to use sick leave, if provided, presumably these one day lost cases are the employees who had to take time off but came back to work as soon as possible. In addition, their curves for the higher days lost are lower than the other three categories.

- The slightly higher percentage of lost workday cases in the first 3 days lost for curve #3 versus curve #1 may be explained by the fact that the injured employees in curve #3 get less than 100% of their wages after being off for 3 calendar days. Therefore, there are more injuries with less workdays than curve #1 which provides full benefits, since curve #1's employees have less "incentive" to return to work as soon as possible. Another difference expected is that there would also be less incentive for curve #3's employees as opposed to #1's to incur high days lost. This can be observed for the higher days lost.

FIGURE 2

This FIGURE compares the cummulative percentage of lost workday cases for the best (#1) and the worst (#5) of the wage continuation benefit categories. By examining the gaps between the two curves at 3 days lost versus more than 13 days lost, it can be shown that for the worst benefits, there were more than 10% difference at 3 days and less than 5% after 13 days lost. This can mean that the worst benefits encourages less lost workdays than the full benefits.

FIGURE 3

The observable trends in this FIGURE are harder to explain. For instance, the lost workday cases rates for curve #1 would be expected to be the highest overall because they receive the best benefits. This did not hold true; curves #3 and #4 had higher lost workday cases rates, particularly up through 6 days lost. Some explanations for the observed differences may be:

- The steepness of the curves for the IRIS users that have the same number of days for their waiting period (e.g., curves #3 and #4 and curves #2 and #5) were very similar, although the explanations for it vary. The IRIS users with 3 days for waiting periods both do not provide their injured employees with 100% benefits after 3 calendar days, and therefore, there is quite a decrease in lost workday cases rates for the first few days lost. The employees are returning to work as soon as possible. However, different reasonings account for the high rates. Curve #4 has a higher rate for the first day perhaps because their employees are receiving no benefits prior to 3 calendar days (unless they can use sick leave) and would return to work after a shorter period than curve #2's employees who receive full benefits for the first 3 calendar days.

- The same general explanations can be applied to the differences observed between curves #2 and #5. The higher lost workday cases rates for curve #5 for the first 3 days lost may be a reflection of the employees who take less time off because they receive no benefits. Curve #2's employees have less incentive to return as soon as possible so show lower rates for the same time period. However, a dip in rates occurs from six to nine days lost for curve #2 possibly because the employees are no longer receiving full benefits once 7 calendars have passed.

FIGURE 1

COMPARISON OF WAGE CONTINUATION BENEFITS
FOR PERCENTAGE OF LOST WORKDAY CASES
BY NUMBER OF DAYS LOST

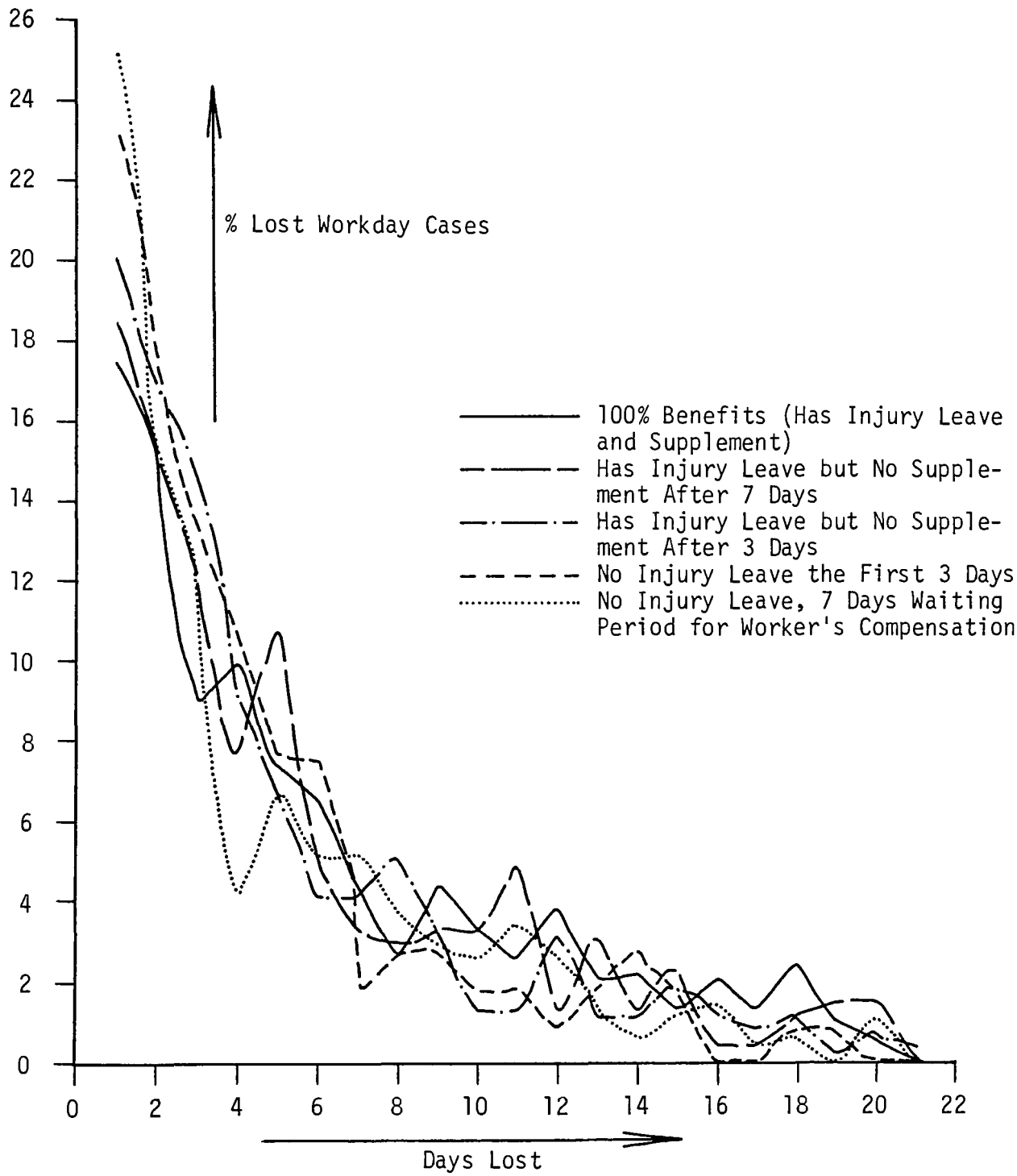

FIGURE 2

COMPARISON OF WAGE CONTINUATION BENEFITS FOR CUMULATIVE PERCENTAGE OF LOST WORKDAY CASES BY NUMBER OF DAYS LOST

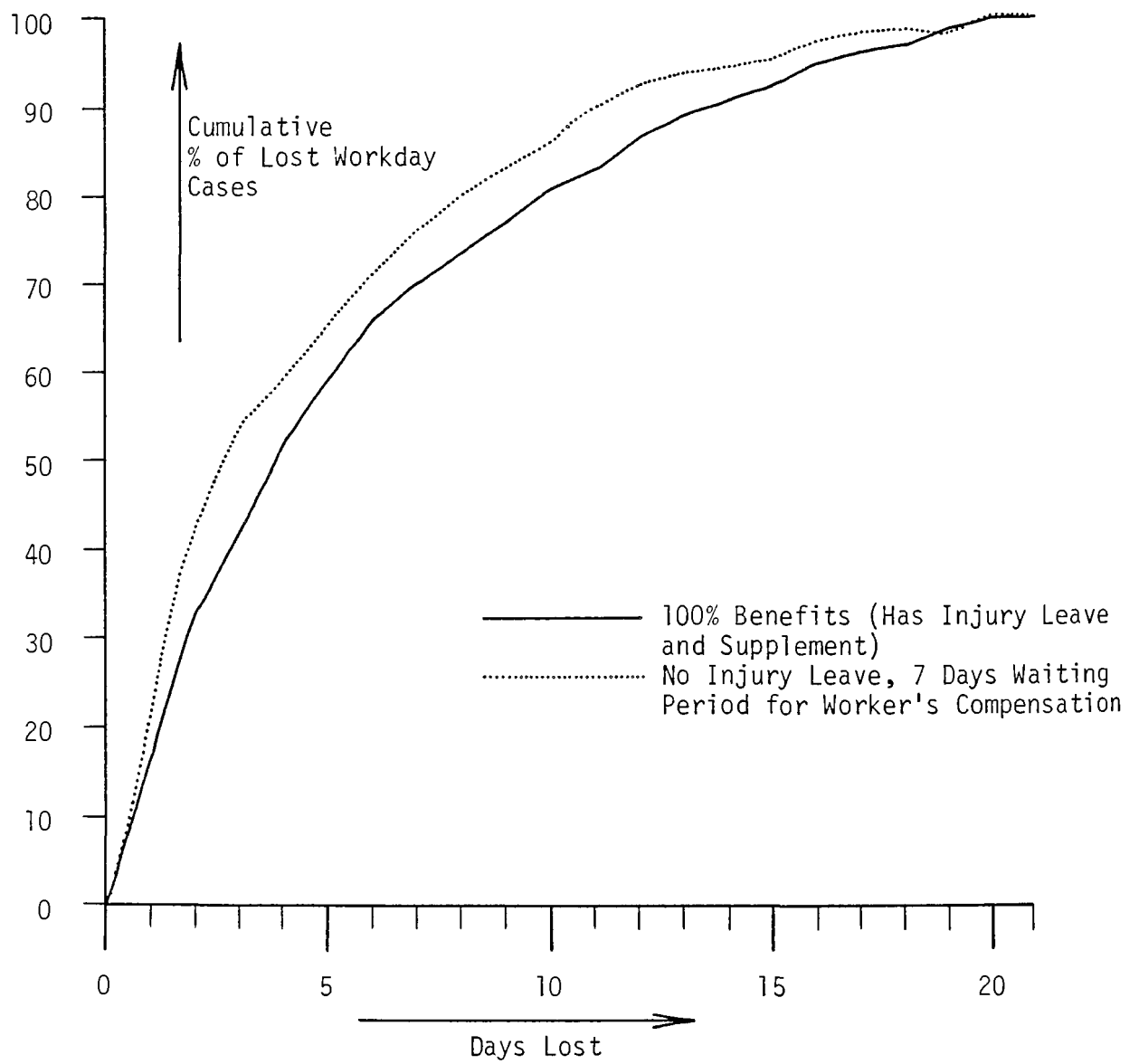

FIGURE 3

COMPARISON OF WAGE CONTINUATION BENEFITS FOR LOST WORKDAY CASES RATE BY NUMBER OF DAYS LOST

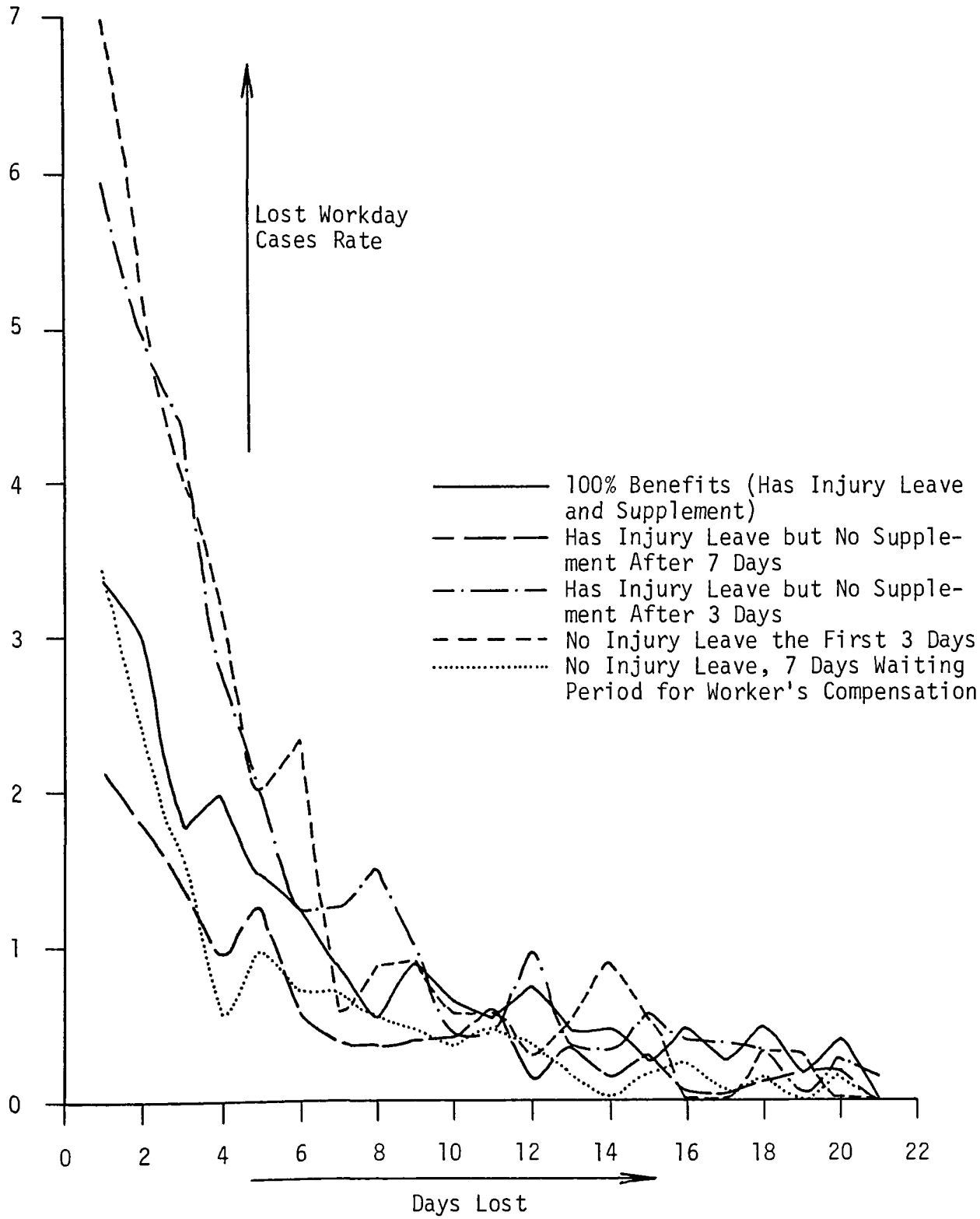

EXHIBIT 25

THE RELATIONSHIP OF INJURY RATES FOR SOLID WASTE COLLECTION TO THE TYPE OF EQUIPMENT IN USE

IRIS analyzed the injury rates for solid waste collectors by the type of equipment they were working on at the time of the injury to determine if one type of equipment might be worse than another. The exposure hours used was by piece of equipment rather than by number of employees, and the four types of collection equipment analyzed were:

- rear-end loaders
- side loaders
- front-end loaders
- mechanical side loaders

Other collection equipment in use included open body trucks, container delivery trucks, trash cranes, etc., but they did not account for more than 5% of the equipment in use at IRIS users and are not analyzed.

REAR-END LOADERS

This type of equipment was used five times more frequently by IRIS users than the next highest exposure hours equipment, side loaders. Rear-end loaders had crew sizes of two to five men, counting the driver. They had also the worst injury record overall of the four types:

- There was an average of 1.7 OSHA recordable injuries per packer. Of these, 64% resulted in lost time.
- The average rear-end loader crew was losing 12 days per truck per year.
- The average workdays lost per lost workday case was 11.
- The average direct cost per OSHA recordable injury was $349.
- The direct cost per truck per year for on-the-job injuries was $592.

SIDE LOADERS

These pieces of collection equipment incurred the second worst injury record. Typical crew sizes were one or two men.

- Although their OSHA incidence rate was worse than that for rear-end loaders (183 vs. 170), the OSHA lost workday cases rate was much lower (74 vs. 108). The OSHA incidence rate of 183 means that the side loader crews were experiencing 1.83 OSHA recordable injuries per vehicle. Considering that the crew size is generally smaller than for rear-end loaders (average of 1.8 injuries per two men vs. 1.7 injuries per three men), the injuries per employee is higher.

- Of these injuries, 40% resulted in lost time, or an average of seven lost time injuries were occurring per ten side loaders.

- The average side loader crew was losing nearly ten days per truck per year.

- The average workdays lost per lost workday case was thirteen.

- The average direct cost per OSHA recordable injury was $254.

- The direct cost per truck per year for injuries was $465.

FRONT-END LOADERS

These were almost used exclusively in commercial collection and had crew sizes of one and two men.

- There was an average of one injury per two trucks, and 58% of these resulted in lost time.

- The average front-end loader crew was losing nearly four days per truck per year.

- The average workdays lost per lost workday case was 12.

- The average direct cost per OSHA recordable injury was $550, the second highest of the four types of equipment.

- The direct cost per truck per year for injuries was $293.

MECHANICAL SIDE LOADERS

The only mechanical side loader in use by the IRIS users was the Rapid Rail system, which only required one man to operate the lift arms.

- There was an average of nearly one OSHA recordable injuries per ten trucks, and 33% of these resulted in lost time.

- The average mechanical side loader crew was losing nearly two days per crew, or per man, per year. This was the lowest severity rate of the four types of equipment.

- The average workdays lost per lost workday case was 20, the highest of the four types of equipment. This signifies that although the lost workday cases in this type of crew was infrequent, they nevertheless were severe.

- The average direct cost per OSHA recordable injury was $480.

- The direct cost per truck, or employee, per year for on-the-job injuries was $44.

AVERAGE INJURY RATES BY TYPE OF EQUIPMENT

Reporting Period: October 1976 to September 1977

	Rear-End Loaders	Side Loaders	Front-End Loaders	Mechanical Side Loaders	Collection Division
OSHA Incidence Rate	170	183	53	9	84
OSHA Lost Workday Cases Rate	108	74	31	3	50
Severity Rate	1,168	967	368	181	563
Average Workdays Lost Per Lost Workday Case	10.81	13.11	11.82	19.67	11.24
Average Cost Per OSHA Recordable Injury	$349	$254	$550	$480	$368
Average Direct Cost Per Equipment-Year	$592	$465	$293	$44	$310
Equipment-Hours of Exposure	4,060,425	753,798	359,954	130,582	10,637,419 (man-hours)

The number of injuries, days lost, and direct cost used in calculating the injury rates were for all injuries, and therefore, the injury rates may be misleading. For instance, injuries such as dog bites are not related to the type of equipment but more so to whether the point of collection was curbside or backyard. Additional IRIS analyses of the type of equipment is required using only the equipment related injuries (e.g., occurred while getting on and off the vehicle) to not only calculate injury rates but also to isolate specific accident patterns that are associated with a particular type of equipment (e.g., higher incidence of overexertions while dumping into the hopper with side loaders). In addition, another detailed injury rates analyses of the type of equipment injuries might separate out the different crew sizes and equipment types (e.g., two man rear-loader crews vs. two man side loader crews).