United States
Environmental Protection
Agency

Air Pollution Training Institute
MD 20
Environmental Research Center
Research Triangle Park NC 27711

DRAFT 2-1-83

Air

EPA

APTI Course SI:445

Introduction to Baseline Source Inspection Techniques

REFERENCE

BASELINE TECHNIQUES FOR AIR
POLLUTION CONTROL EQUIPMENT
PERFORMANCE EVALUATION

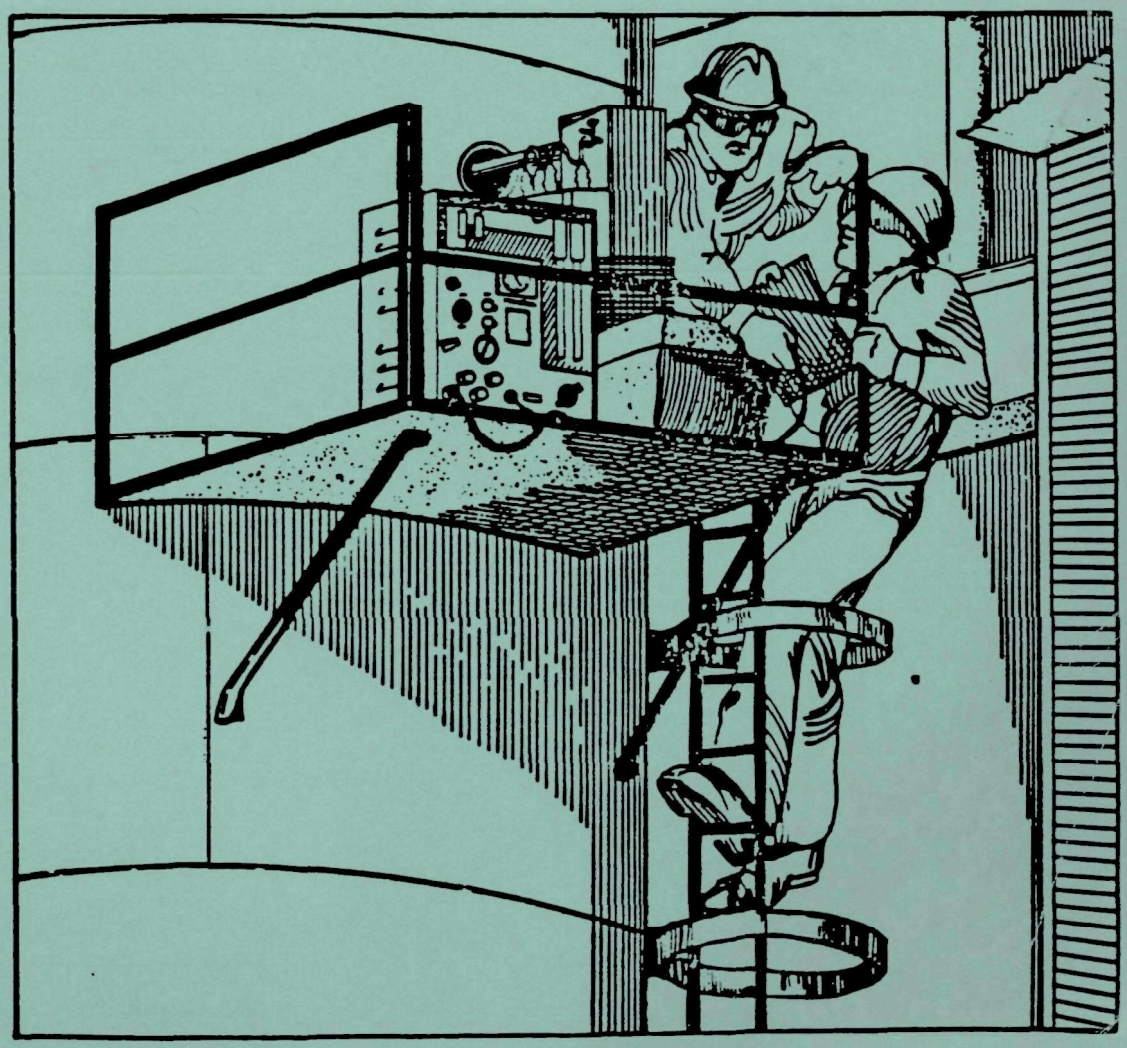

FOR USE WITH

APTI COURSE SI: 445

DRAFT 2-1-83

BASELINE TECHNIQUES FOR AIR POLLUTION CONTROL EQUIPMENT PERFORMANCE EVALUATION

by

John R. Richards
Engineering-Science
501 Willard Street
Durham, NC 27701
919-682-9611

Contract No. 68-01-6312
Task No. 30
Project No. 9430

Project Officer
Kirk E. Foster

Stationary Source Compliance Division
U.S. Environmental Protection Agency
Washington, D.C. 20460

February 1983

DISCLAIMER

This draft report was furnished to the U.S. Environmental Protection Agency by Engineering-Science, Inc., Durham, North Carolina 27701. It is not an official policy and standards document. The opinions, findings, and conclusions are those of the authors and not necessarily those of the Environmental Protection Agency. Every attempt has been made to represent the present state of the art as well as subject areas still under evaluation. Any mention of products or organizations does not constitute endorsement by the United States Environmental Protection Agency.

The U.S. Environmental Protection Agency does not endorse any specific inspection procedure. This report is presented for informational purposes only. Inspectors are encouraged to seek information concerning specific procedures, especially safety procedures which have been adopted at their agency or company. This report is not intended to abbreviate, alter or supercede these procedures.

ACKNOWLEDGEMENTS

Engineering-Science appreciates the assistance provided by the EPA Task Manager, Mr. Kirk E. Foster. Numerous Engineering-Science personnel made valuable contributions to this report. Ms. Robin Segall prepared the sections concerning inspection of flares and concerning the legal and administrative aspects of plant inspection. Mr. Cal Thames prepared the section on inspection of carbon bed adsorbers. Useful information was provided by Mr. Ted Michaelis and Mr. Macon Shepard concerning carbon bed adsorbers.

TABLE OF CONTENTS

Page

1.0 INTRODUCTION TO BASELINE INSPECTION TECHNIQUE.....1-1

1.1 The Baseline Technique.....1-2
1.2 Underlying Principles.....1-3

2.0 ELECTROSTATIC PRECIPITATORS.....2-1

2.1 Components and Operation.....2-1
2.2 Inspection Procedures.....2-8
2.3 References.....2-14

3.0 FABRIC FILTERS.....3-1

3.1 Components and Operation.....3-1
3.1.1 Pulse Jet Fabric Filters.....3-1
3.1.2 Reverse Air (Outside-to-Inside) Collectors.....3-3
3.1.3 Reverse Air (Inside-to-Outside) Collectors.....3-4
3.1.4 Shaker Collectors.....3-5
3.2 Inspection/Maintenance.....3-5
3.2.1 Pulse Jet Filters.....3-5
3.2.2 Reverse Air (Outside-to-Inside) Collectors.....3-7
3.2.3 Reverse Air (Inside-to-Outside) Collectors.....3-8
3.2.4 Shaker Collectors.....3-9
3.3 References.....3-10

4.0 WET SCRUBBERS.....4-1

4.1 Components and Operation of Particulate Scrubbers.....4-1
4.1.1 Preformed Spray Scrubbers.....4-2
4.1.2 Tray-Type Scrubbers.....4-3
4.1.3 Packed-Bed Scrubbers.....4-4
4.1.4 Venturi and Orifice Scrubbers.....4-5
4.1.4.1 Venturi Scrubber.....4-5
4.1.4.2 Variable Throat Venturi Scrubbers.....4-5
4.1.4.3 Orifice Scrubber.....4-5
4.1.5 Mechanically Aided Scrubbers.....4-5
4.2 Inspection Procedures.....4-6
4.2.1 Opacity and Gas Flow Rate.....4-6
4.2.2 Static Pressure Drop.....4-7
4.2.3 External System Inspection.....4-11
4.2.3.1 Demister.....4-11
4.2.3.2 Throat (Venturi Scrubbers).....4-11
4.2.3.3 Shell.....4-12
4.2.3.4 Precooler.....4-12
4.2.3.5 Sump, Recirculation Line, Make-up Line and Purge Line.....4-12
4.3 References.....4-14

TABLE OF CONTENTS (Contd.)

Page

5.0 MECHANICAL COLLECTORS....5-1

5.1 Components and Operation....5-1
5.1.1 Simple Cyclones....5-1
5.1.2 Multiple Cyclones....5-3
5.2 Inspection Procedures....5-4
5.3 References....5-6

6.0 CARBON BED ADSORPTION SYSTEMS....6-1

6.1 Components and Operation....6-1
6.2 Inspection Procedures....6-4
6.3 References....6-8

7.0 FLARE....7-1

7.1 Components and Operation....7-1
7.1.1 Elevated Flares....7-2
7.1.2 Ground Flares....7-7
7.1.3 Forced Draft Flares....7-7
7.2 Inspection Procedures....7-9
7.3 References....7-11

8.0 AUXILIARY EQUIPMENT....8-1

8.1 Ventilation System....8-1
8.2 Fan Evaluation....8-4
8.2.1 Physical Condition of Fan Housing....8-5
8.2.2 Fan Operating Conditions....8-5
8.3 References....8-8

9.0 PROCESS EQUIPMENT....9-1

10.0 VISIBLE EMISSION EVALUATION....10-1

10.1 Observation Procedures....10-1
10.2 Baseline Evaluation....10-5
10.3 Limits to the Use of Opacity....10-9
10.4 References....10-9

11.0 SAFETY INFORMATION....11-1

11.1 General Procedures....11-2
11.1.1 Safety Training....11-3
11.1.2 Medical Monitoring Program....11-3
11.1.3 Written Safety Procedures....11-4

TABLE OF CONTENTS (Contd.)

11.2 Common Inspection/Maintenance Hazards.....11-4
11.2.1 Inhalation of Toxic Agents and Asphyxiants.....11-5
11.2.2 Accidental Falls.....11-6
11.2.3 Noise.....11-12
11.2.4 Head Protection.....11-13
11.2.5 Eye Protection.....11-13
11.2.6 Footwear.....11-14
11.2.7 Burns.....11-14
11.2.8 Heat Strees.....11-14
11.2.9 Cold Weather Conditions.....11-15
11.2.10 Electrical Shock.....11-15
11.2.11 Ionizing Radiation.....11-15
11.3 Confined Area Entry.....11-17
11.3.1 General Entry Procedures.....11-18
11.3.1.1 Electrostatic Precipitators.....11-19
11.3.1.2 Fabric Filters.....11-20
11.4 References.....11-21

12.0 ADMINISTRATIVE AND LEGAL ASPECTS OF PLANT INSPECTIONS.....12-1

12.1 Introduction.....12-1
12.2 Preinspection Procedures.....12-1
12.2.1 File Review.....12-1
12.2.2 Inspection Announcement.....12-3
12.2.3 Inspection Equipment.....12-3
12.2.4 Plant Surroundings.....12-4
12.2.5 Visible Emission Observations.....12-5
12.2.6 Plant Entry.....12-4
12.2.6.1 Warrants.....12-7
12.2.7 Preinspection Interview.....12-10
12.3 Field Proceudres.....12-10
12.4 Post-Inspection Procedures.....12-11
12.4.1 Post-inspection Interview.....12-11
12.4.2 File Update and Report Preparation.....12-11
12.5 Handling Confidential Business Information.....12-12
12.5.1 Defining Confidential Business Information.....12-13
12.5.2 Suggested Handling Procedures.....12-13
12.5.2.1 Receipt of Confidential Business Data...12-13
12.5.2.2 Handling in the Office.....12-14
12.5.2.3 Privileged Data and Report Preparation..12-14
12.5.2.4 Potentially Confidential Information....12-14
12.6 Use of Photographic Documentation.....12-15
12.7 Reference.....12-16

APPENDIX A WORKING FILES.....A-1

APPENDIX B FLOW CHARTING TECHNIQUES.....B-1

APPENDIX C VISIBLE EMISSION OBSERVATION FORM.....C-1

APPENDIX D OSHA REGULATIONS.....D-1

APPENDIX E NIOSH GUIDELINES.....E-1

APPENDIX F BASIC STATISTICAL METHODS.....F-1

1.0 INTRODUCTION TO BASELINE INSPECTION TECHNIQUE

The Baseline Inspection Technique has been developed to aid both the source operators and regulatory agency inspectors to routinely evaluate air pollution control equipment performance. Early diagnosis of emerging operating problems is essential to the prevention of permanent equipment damage and the minimization of emissions.

The fundamental principle of the technique is that control device performance diagnosis is most accurate when observed operating conditions are compared with site-specific baseline data. The specific "historical" data implicitly takes into account the numerous subtle factors which can influence emissions. Baseline assessments avoid the errors potentially introduced by extrapolation of published literature values to a given facility.

Control device instruments and field measurements are sometimes subject to error; therefore, baseline diagnosis is based on sets of data comparisons rather than reliance on just one parameter. Even when some of the data is unavailable or suspect in quality, it is still possible to reach meaningful and accurate conclusions using the remainder of the data.

The purpose of the Baseline Inspection Technique is to rapidly identify significant changes in performance and the possible reasons for the changes. The technique does not necessarily provide definite evidence of noncompliance with regulations, nor does it necessarily provide a specific list of repairs required.

This manual contains chapters detailing baseline inspection techniques for most of the commonly encountered equipment for air pollution control. In addition, it includes chapters which discuss visible emission observation, auxiliary equipment inspection, process equipment evaluation, inspection safety procedures, and the administrative and legal aspects of regulatory inspections.

At this point it is suggested that persons utilizing the Baseline Inspection Technique have a technical background--preferably engineering experience. As with any work involving equipment, care should always be exercised. Formal safety training is highly recommended for this activity and for any field work involving air pollution control equipment. No single technique will satisfy all source characteristics and inspection circumstances; whenever necessary inspectors and source operators should modify the procedures outlined in this manual.

1.1 THE BASELINE TECHNIQUE

In the Baseline Inspection Technique the inspector should start at the point of gas exhaust and proceed "counter" to the gas flow through to the process equipment. Proceeding counter to the gas flow (backward through the system) tends to minimize inspection time and reporting requirements and maximize the amount of useful information obtained. More specifically, the information on effluents and control equipment gained early in the inspection is not only the easiest to obtain, it can be used later either to narrow the scope of the inspection or to terminate the inspection without completing the most time-consuming part of the evaluation--namely, the process equipment.

The Baseline Inspection procedures are listed below in the suggested temporal sequence beginning at the stack, proceeding backward through the system, and ending with the process equipment. For regulatory agency personnel, there are some additional preinspection and post-inspection steps required. These are listed separately from the Baseline procedures and presented in the last chapter of the manual entitled "Administrative and Legal Aspects of Plant Inspections".

<u>Baseline Inspection Procedures</u>

- Observe the stack effluent
- Check the continuous monitor(s)
- Measure the fan parameters and evaluate physical condition
- Analyze the control equipment performance and physical conditions
- Check the ventiliation system performance and physical conditions
- Evaluate process operating conditions
- Check raw materials and/or fuels

<u>Preinspection Steps (regulatory agency personnel only)</u>

- Review the source files
- Schedule the inspection
- Check the portable inspection equipment

Observe the plant surroundings prior to entry
Request entry to the plant
Interview plant official(s)

Postinspection Steps (regulatory agency personnel only)
Interview plant official(s)
Update source files
Prepare report

The Baseline Inspection approach offers particular advantage to regulatory agency personnel in that it is very consistent with the regulations. An inspector must confirm compliance with a set of regulations which normally consists of the following:

1. Opacity levels.
2. Operation and maintenance of continuous monitors.
3. Operation and maintenance of control devices.
4. Recordkeeping requirements for control devices.
5. Raw material characteristics (fuel surfur regulations).
6. Process operation rates (specific operating permit limits).

By proceeding counter to the gas flow, the inspector can determine compliance with the first four regulations rapidly. At the same time, the performance of the collector and fan provides a good indication of changes in raw material characteristics or process load. Therefore, in many cases it is possible to abbreviate inspections when compliance with items 5 and 6 is highly probably. This helps agencies better utilize scarce inspection time and minimize disruption of source personnel schedules caused by the inspection.

1.2 UNDERLYING PRINCIPLES

The Baseline Technique is based on five basic principles. The first of these is that the operating characteristics and performance of each control system is initially assumed to be unique. This is because there are a myriad of process variables and control device design factors, any one of which can singly or collectively influence performance. Often it is difficult, if not impossible, to determine reasons why apparently similar units opperate quite differently. To ensure the accuracy of the performance evaluation, the Baseline Techniques utilizes a comparison of present operating conditions against a historical baseline level for that unit. Each variable which has shifted significantly is considered a "symptom" of possible operation problems. During the inspection a number of comparisons are made and

the symptoms are diagnosed. Acquisition of site-specific baseline data is important to the success of the approach.

Experience during numerous previous inspections has indicated that many on-site monitors for air pollution control devices are either inaccurate or have failed entirely. Due to this very common problem, sole use of on-site monitors is unreliable. A second basic principle of Baseline Inspections is that portable meters are used in lieu of permanent on-site meters whenever feasible. The use of portable meters includes basic quality assuance checks. During the inspection both the portable meter and permanent meter values are recorded. This provides a means to confirm the operational status of the onsite gauges.

The basic type of equipment necessary to perform a Baseline Inspection is listed in Table 1-1 along with an approximate estimate of cost (1980 dollars). Regulatory agencies do not need a complete set for each individual and may need only one set for each local office. The most expensive items are the self-contained breathing apparatus and these are required only if confined area entry into environments conceivably having oxygen deficiencies or toxic agents is anticipated[a]. The rest of the safety equipment is quite economical and certainly each inspector should be fully equipped.

Principle 3 of the Baseline Technique is simply that as much information as possible will be used to evaluate performance so that problems can be identified at the earliest time possible. Fan operating conditions, fan physical conditions, and control device internal conditions[a] provide especially useful indicators of developing problems and are therefore included within the scope of Baseline Inspection Technique.

The inspection data is organized in a coherent fashion as it is obtained. In this manner the inspector can expand or abbreviate an inspection based on an examination of the initial data. And thus principle 4 is: Diagnosis of operation problems is done by evaluation of sets of symptoms characteristic of common problems. Reliance on sets of symptoms means

[a]Internal inspection of control equipment is not recommended unless each individual performing the inspection has received specific and detailed training in safety procedures. See Chapter 11.0 SAFETY INFORMATION.

TABLE 1-1. RECOMMENDED EQUIPMENT FOR FIELD INSPECTIONS

	Item	Approximate cost (1980 dollars)
*1.	Hard hat	$ 2 to $ 5
*2.	Safety shoes	$ 25 to $ 40
*3.	Safety glasses (side shields)	$ 5 to $ 100
*4.	Ear protectors	$ 1 to $ 10
*5.	Dust masks	$ 10/100 masks
*6.	Cannister type respirator	$ 15 to $ 30
*7.	Coveralls	$ 20
*8.	Gloves	$ 3 to $ 8
*9.	Tool belt	$ 30
10.	Ropes and harness	$ 50
11.	Prybar	$ 5
*12.	Flashlight	$ 10 to $ 15
*13.	Tape measure	$ 7 to $ 10
*14.	Duct tape	$ 5
15.	Stopwatch	$ 20 to $ 150
*16.	Grounding cable	$ 25 to $ 35
*17.	Differential pressure gauges	$ 50 to $ 75
*18.	Gauge magnets	$ 5
19.	Pitot tubes	$ 100 to $ 150
20.	Velometer	$ 200 to $ 400
*21.	Thermocouples	$ 150 to $ 300
*22.	Multimeter	$ 10 to $ 20
23.	Tachometer	$ 100 to $ 200
24.	pH paper	$ 3 to $ 6
*25.	pH meter	$ 100 to $ 400
*26.	Combustion gas analyzer (O_2 & CO_2)	$ 150
27.	Oxygen meter (for confined area entry)	$ 500 to $ 700
28.	Self-contained rebreather (minimum of 2 required)	$1000 to $1500

*Indicates equipment required for most inspection situations. Other equipment should be taken when necessary.

that analyses can be completed even if several of the measurements cannot be made at a given facility.

Principle 5 of the Baseline Technique is that the <u>judgement of the inspector must take precedent over any procedures contained in this report</u>. Due to the numerous site-specific factors, an inspector must always remain alert regarding necessary changes in the scope of the inspection or procedures. For example, nothing should be attempted at the risk of personal injury or damage to the equipment. Furthermore, it may be necessary to alter certain analyses. Many inspectors will quickly evolve to more sophisticated inspection techniques not discussed herein. Basically, it is impossiible to prepare a concise, reliable inspection manual for all situations. There is no substitute for a well-trained, conscientious inspector.

2.0 ELECTROSTATIC PRECIPITATORS

The two most important elements in the systematic inspection of an electrostatic precipitator are power input data and plume opacity. The power data, which is easily read off the transformer - rectifier (T-R) sets, can be used to determine if the particle charging and migration is adequate. Both of these are basic to the proper operation of any precipitator. It is not sufficient, however, to simply maintain adequate power levels. Other factors such as partial bypass (sneakage) and reentrainment may lead to high mass emission rates. Such conditions are detected by increased plume opacity. Therefore, power input and opacity are complimentary diagnostic tools. With these performance indicators it is possible to routinely evaluate operating conditions by comparing present levels with baseline levels. Shifts off the baseline indicate a need for a detailed inspection of precipitator components.

A brief discussion of the components common to most large electrostatic precipitators[a] is useful in developing an effective inspection approach. The basic operating principles are introduced in the following section.

2.1 COMPONENTS AND OPERATION

The gas stream generated in the process equipment is delivered to the precipitator at duct velocities of 50 to 75 ft/s. The gas stream must be slowed in order to provide time to adequately treat the effluent; accordingly, the entrance to the unit is typically an expansion chamber, often termed the "inlet nozzle." Here the gas velocity drops more than an order of magnitude down to 3 to 8 ft/s. Turning vanes and perforated plates are often used to improve gas distribution across the face of the precipitator.

[a]This section concerns the standard negative corona precipitators. For information concerning the positive corona devices often used for collection of organic aerosols, see The Air Pollution Engineering Manual, AP-40, 1973.

The particulate laden gas stream enters a number of parallel passages comprised by large collection plates and a discharge electrode assembly. There are many varieties of the latter, including the standard weighted wires assembly to the recent rigid frame and rigid electrode designs. Typical widths of the passages are 9 to 12 in. The discharge electrode system is connected to a high voltage power supply which converts 440 to 480 volt A.C. power to 15 to 70 kV D.C. power. Most new power supplies include power controllers to optimize power input.

There are normally a number of power supplies on a given electrostatic precipitator. Each of these feed a separate region of the precipitator, termed a field.[b] There are usually 2 to 10 fields in a series, and 2 to 8 fields in parallel on a unit. It is important for the agency inspector to know the layout of fields and the field numbering system used at the plant.

The particulate matter passing through the energized electrostatic precipitator is charged and then it migrates to the collection plate at a rate dependent on the strength of the electrostatic field and the number of ions on the particle (which depends on particle size). Some particles also are collected on the negatively charged discharge electrodes. Both sets of electrodes must be rapped on a regular basis to remove most of the accumulated material.

The solids dislodged during rapping fall into hoppers below the electrodes. Most units have a pyramidal hopper. Such hoppers are usually equipped with insulation, heaters and level indicators. Beneath each hopper is a solids discharge valve which could be as simple as a rotary valve or as sophisticated as a pressurized evacuation or a pneumatic evacuation system.

A basic understanding of precipitator operating principles is necessary for the evaluation of the inspection results. Figure 2-1 is a simple schematic of the particle charging process. Beginning in block a, the application of the high negative voltage to the discharge electrodes results in the very rapid acceleration of electrons away from the discharge electrode and toward the collection plate. The electrons are moving fast enough so that when they

[b]A field may include up to two separate bus sections.

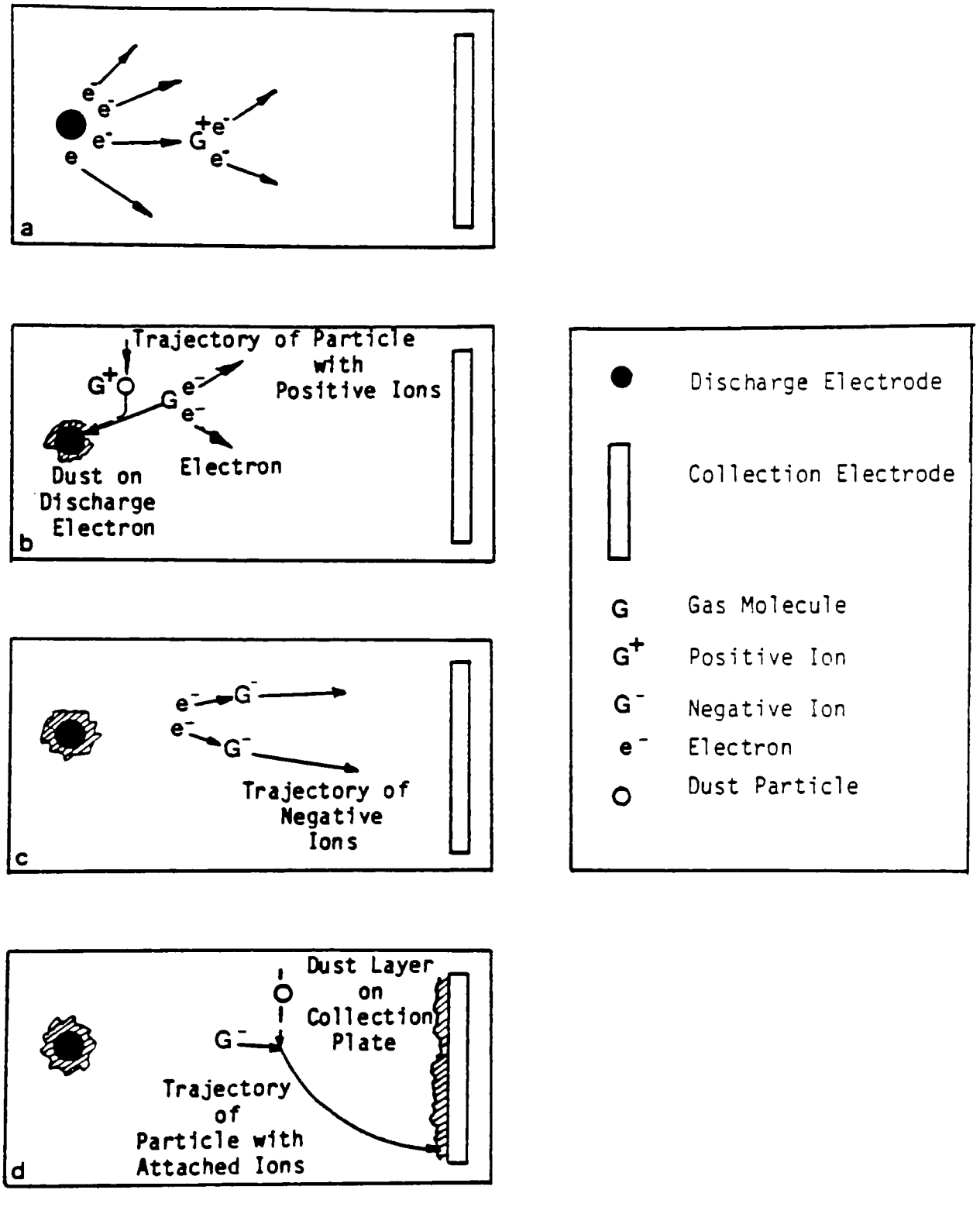

FIGURE 2-1. Particle Charging and Migration

collide with a gas molecule, that molecule is ionized. The original electron plus the one freed during ionization are then accelerated again under the influence of the strong electric field. This ionization process is repeated many times in a very short distance, resulting in a large number of electrons and positive gas ions. These positive ions return to the discharge electrode carrying a small number of particles along (see Figure 2-1, block b). As the electrons continue to move away from the discharge electrode, the electric field strength decreases. The slower moving electrons are then captured during the next encounter with a gas molecule (see Figure 2-1, block c). The negative ion created then begins to move along the electric field lines toward the collection plates. The negative ions are themselves captured on the particles (Figure 2-1, block d); the larger the particle the more ions which can be attached on the surface. Once the particles cross the turbulent zone between the discharge and collection electrodes, they build up in a layer; the charge is dissipated through the layer and onto the grounded collection electrode. The ease by which the charge is dissipated through the dust layer is inversely related to the resistivity.

The voltage applied to the discharge electrode (commonly termed the "secondary voltage") is one of the most important operating variables. If the voltage is below what is called the corona onset voltage (see Figure 2-2), the avalance process described earlier is not initiated. Under these conditions the precipitator acts simply as a settling chamber and the particulate matter removal is usually less than 40%. As the voltage goes up above corona onset levels, smaller particles are charged more effectively and the electric field which drives charged particles toward the collection plate is increased. The voltage on the discharge electrodes should be as high as possible limited only by excessive sparking between the electrodes. Most electrostatic precipitators operate between 15 and 50 kV.

A second parameter of importance is the current passing from the discharge electrodes to the collection plates (commonly called the "secondary current"). The secondary current and secondary voltage for each field as read off the panels of the T-R set control cabinet are multiplied together to get the total power input to the field as shown in Equation 2-1. This is conveniently recorded as watts (kV times mA equal watts). The total power to the precipitator is the sum of power levels in each field, see Equation 2-2.

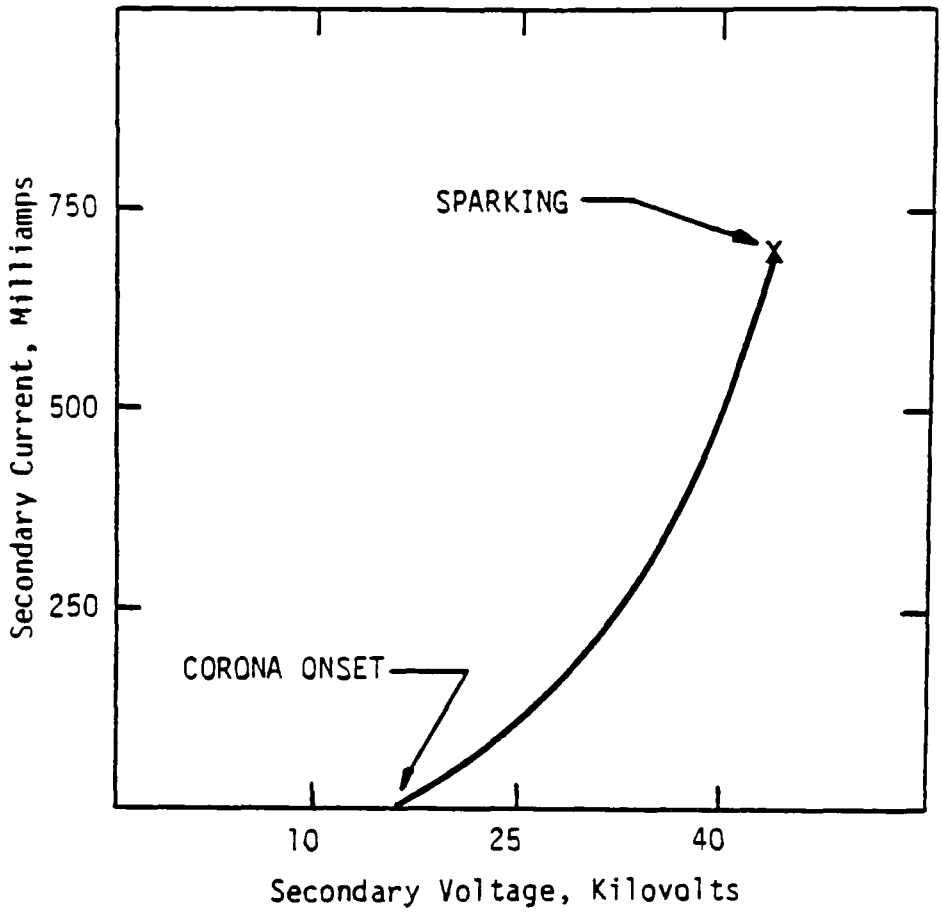

FIGURE 2-2. Voltage-Current Plot

2.1.1 Moderate and High Resistivity Conditions

The total amount of power per unit volume of gas being treated is often a good indirect indication of the degree of particle collection. The greater the power input, the greater the collection efficiency. The general relationship between power input and penetration (1 minus the collection efficiency) is shown in Equation 2-3.

$$P_i = S_v \times S_c \qquad \text{Eq. 2-1}$$

where P_i = power to field i, watts
S_v = secondary voltage of field i, kilowatts
S_c = secondary current of field i, milliamps

$$P_c = \sum P_i \qquad \text{Eq. 2-2}$$

$$P_t = e^{-0.06K_i(P_c/V)} \qquad \text{Eq. 2-3}$$

where P_t = fractional penetration
K_i = constant
P_c = corona power, watts
V = flow rate ACFM x 10^3

The mass penetration power input curve which results from Equation 2-3 is illustrated in Figure 2-3. The K_i constant is dependent on many factors including the particle composition, surface characteristics, and size distribution. The magnitude of K_i is lowest for difficult-to-collect materials.

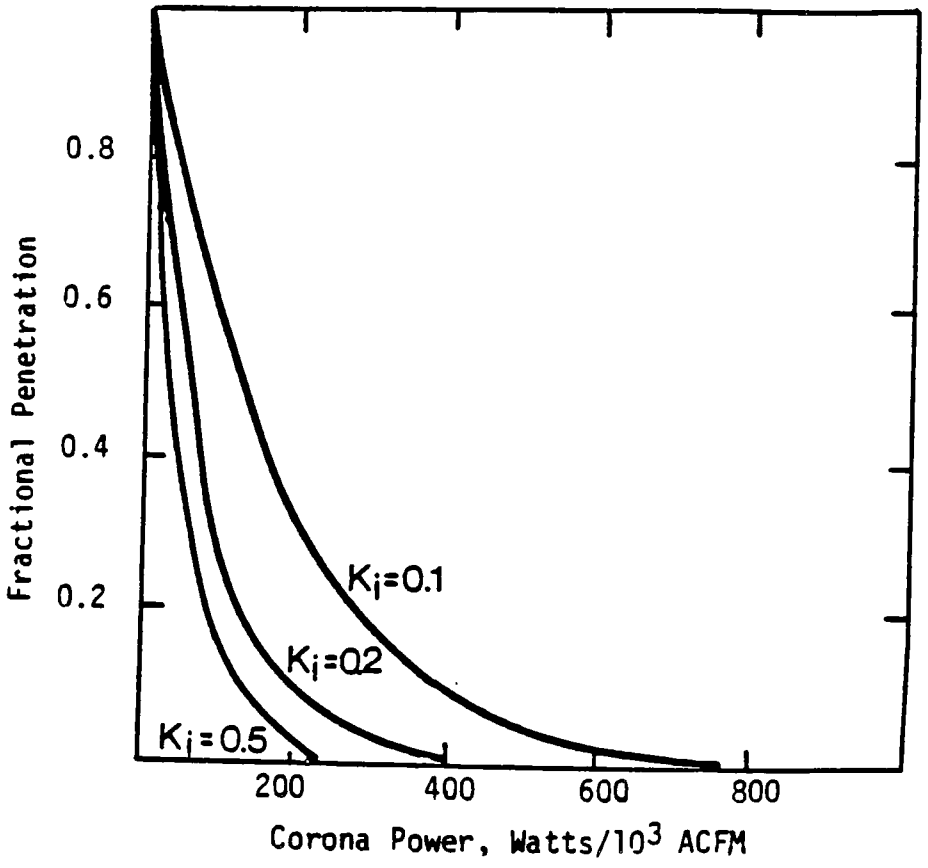

FIGURE 2-3. Penetration as a Function of Power Input and K_i

There are certain practical factors which modify the shape of the penetration-power input curve in actual installations. The low gas velocities and long retention times result in effective settling of large particles. Therefore, even with a zero power level, the penetration rarely exceeds 0.6 (40% collection efficiency). In each precipitator, there is a small quantity of gas which successfully bypasses the treatment zone. Due to this untreated gas the penetration never reaches zero. There are also emissions due to reentrainment which are only partially affected by power input. Due to these factors, a hypothetical curve for an actual installation would appear as shown in Figure 2-4. The two bottom areas represent the penetration due to sneakage and reentrainment. In a given unit these values could be considerably greater than shown.

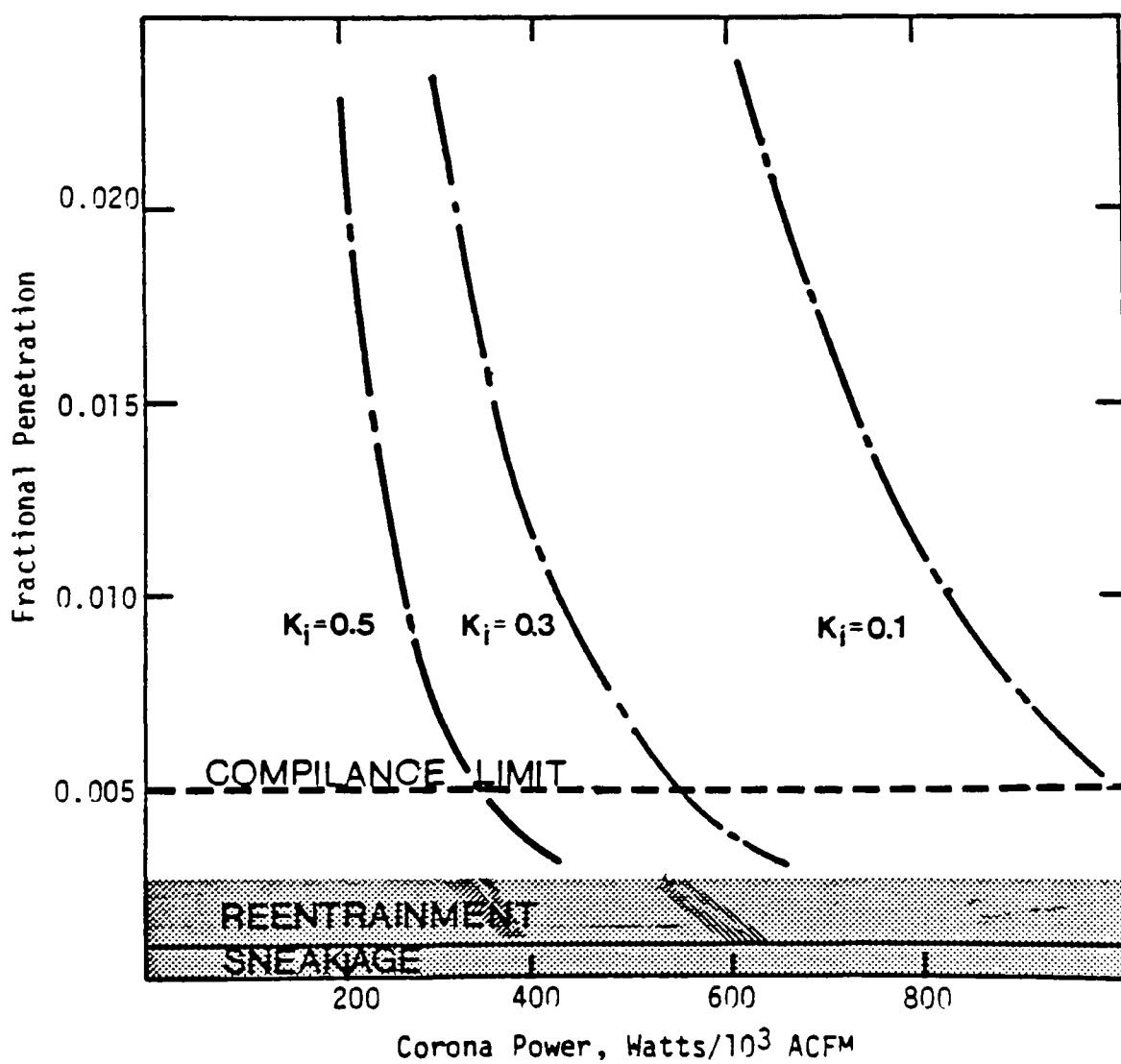

FIGURE 2-4. Influence of Reentrainment and Sneakage on Penetration

Due to the strong influence of the K_j parameter on the position of the curve and the possible influence of non-power related emission modes, it is not presently possible to define a universally applicable penetration power input curve. These correlations must be developed for each installation separately. This is the only means to adequately account for the K_j parameter. In some plants the particle characteristics may vary enough to cause substantial variations in the value of K_j.

The use of power-emission correlations plus the evaluation of secondary voltage and current data used to calculate the power provide powerful tools for the source and agency inspectors. Unfortunately, not all precipitators have secondary voltage meters and a few do not even have secondary current meters. In such cases (often with older units), similar analysis can be done with the primary current and primary voltage meters which are almost always available[a]. The primary meters monitor the power input to the transformer of the power supply. These meters are a less direct indication of electrical conditions in the electrode zone.

2.1.2 Low Resistivity

When the resistivity of the dust layer is low, there is no general relationship between the power input and the penetration. Particulate emissions are primarily influenced by the superficial velocities through various portions of the precipitator, the rapping intensities, the rapping frequency, and the precipitator aspect ratio.

2.2 INSPECTION PROCEDURES

The inspection begins with the stack visible emission observation. Compliance with visible emission requirements is determined and any change in opacity from typical levels is noted. The presence of regular "puffs" should be noted and timed. Next, the data on the output consoles of any transmissometers and gas monitors should be obtained. Again, the presence of spikes should be logged and the intervals between spikes estimated. The transmissometer is usually in a more favorable location and is more sensitive to spikes than the visible emissions observer. The present level and trend in opacity over the last eight hours should be checked. Also, the inspection should note the frequency and levels of the automatic span and zero checks.

[a]When using primary side data, the power input is usually multiplied by the power factor. For older installation a factor of 0.75 is often assumed.

An oxygen content measurement in the ESP exit breeching is useful in determining if there is a serious air inleakage. Temperature readings at the exit are also useful for confirming the magnitude of the inleakage.

These preliminary steps accomplished before the actual inspection of the Precipitators take about 1/2 to 1 hour. It is time well spend since this data can be used to narrow the scope of the inspection.

The inspector then proceeds to the electrical cabinets which are connected to each of the transformer-rectifer (T-R) sets. For each T-R set there are a set of meters on the outside of the cabinet. The meters generally have the following units:

primary voltage - volts, A.C.
primary current - amps, A.C.
secondary voltage - kilovolts, D.C.
secondary current - milliamps, D.C.
spark rate - number per minute

The readings should be written down in the same order as the power supplies are arranged on the precipitator.[1,2] For example, assume there is a precipitator with 8 power supplies arranged in the order shown in Figure 2-5.

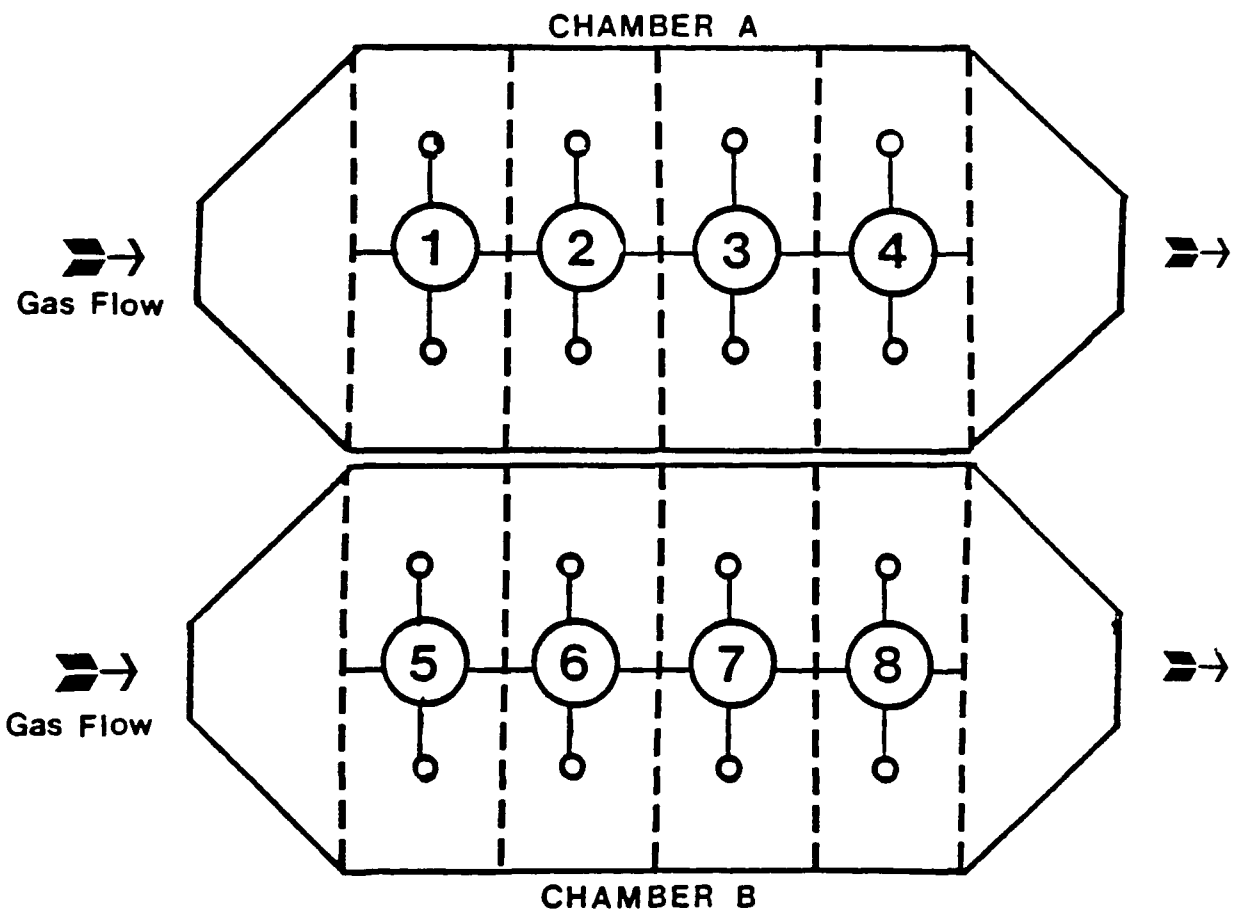

FIGURE 2-5. Precipitator Having Two Chambers Each with Four Fields in Series and Two Bus Sections per Field

For the first chamber the inspector would record all the electrical parameters on fields 1 to 4 in order. Then the values on the next chamber would be recorded starting with 5 and ending with 8. The reason for this approach is that the inspector must determine if the normal trends are present in order to confirm the prevailing resistivity range. In the large majority of the precipitators which have moderate resistivity, the secondary current is very low in the inlet fields and increases progressively in the subsequent fields. The trend line is shown in Figure 2-6. The secondary voltages are usually slightly higher in the inlet field and decrease toward the outlet field. This trend line is shown in Figure 2-7.

When the resistivity is low, all of the fields have high secondary currents which approach the current limit of the T-R set. Sparking is very low in all fields and may be absent entirely from the outlet fields. When the dust resistivity is high the secondary currents are low throughout the chamber, however, there may be a slight increase going from inlet to outlet. Sparking is usually but not always high when the resistivity is high.

With the electrical data logged in the proper order, it is possible to quickly scan the data. Data analysis can be done most effectively by plotting the secondary voltage and current plots as shown in Figures 2-6 and 2-7. The line marked baseline is the data recorded earlier, generally during a stack test. This sort of simple plot can be used to answer one very basic but vital question, namely, has there been a shift in all the values in each field or have only a few fields changed? The latter normally implies some localized problem such as rapper failure, malalignment, solids buildup, insulator leakage, and air inleakage. If all the fields have changed, then the resistivity has probably changed. Based on the analysis of these plots, the remainder of the inspection can be arranged. If the total power input has not changed significantly since the baseline period <u>and</u> the opacity has not increased significantly, then there is probably no need for further inspection at this time.

Table 2-1 illustrates some of the ways the inspection approach can be adjusted to respond to possible signs of performance problems. If there is a need to check the rappers, the inspector should use whatever hearing protection and respirators[a] are appropriate. The quickest way to check rappers is

[a]Fugitive gas leaks on precipitators operated under positive pressure can lead to high concentrations of SO_2.

to have an electrician access the rapper control cabinet and manually activate each set of rappers. The more patient inspector may simply let the rappers activate on their normal schedule and confirm that each sounds normal. For large units, the latter approach can be quite tedious. Another approach, used by a number of operators, is to precariously balance a washer (or penny) on the side of each rapper. When returning several hours later, one need only find the rappers that failed to shake the washer off.

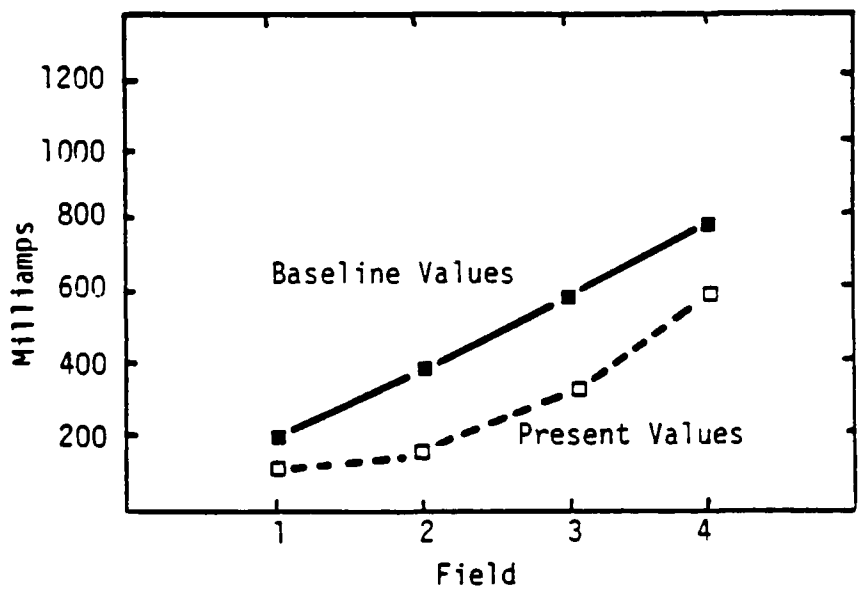

FIGURE 2-6. Comparison of Present and Baseline Values for Secondary Current, Four Field Unit

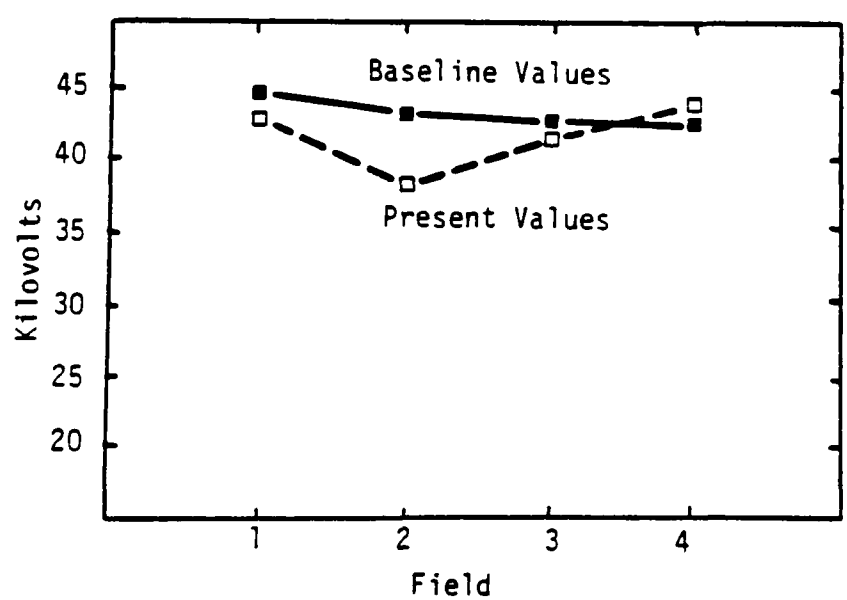

FIGURE 2-7. Comparison of Present and Baseline Values for Secondary Voltage, Four Field Unit

The intensity of rapping should be checked whenever puffing is observed[3]. For compressed air type units, the intensity is proportional to the air pressure (usually gauges are available on the air lines leading to the rappers).[5] For other types of rappers, the intensity is controlled by either the voltage or current in the rapper power lines.

TABLE 2-1. INSPECTION ORIENTATION BASED ON INITIAL REVIEW OF ELECTRICAL SET DATA

Symptoms		
Electrical set	Other	Inspection items
Low secondary currents (one or more fields)	Increased opacity	Check collection plate rappers
Reduced power input in all fields	Increased opacity	Check for changes which could lead to high particle resistivity (fuel sulfur content, temperature change, ash composition change)
High power input in all or most fields	Puffing	Check rapper intensity and sequence, especially on inlet and outlet fields; also check for factors which would give low particle resistivity
Low secondary voltage in one or more fields	Increased opacity	Source personnel should check insulators during next outage; agency personnel confirm that insulator heater and penthouse blowers are operating
Reduced voltages in a number of fields	Higher O_2 levels	Check for air inleakage around hatch and hoppers

For most precipitators it is difficult to confirm quickly that solids are being discharged. If this can be checked safely and reasonably quickly, it is a worthwhile task. If no solids are being discharged over a 10 to 30 minute period, then either a solids discharge system problem has developed (with potentially serious consequences) or the precipitator is in a very advanced state of deterioration. In either case immediate attention is warranted.

There is occasionally a need to make an internal inspection of at least part of the precipitator to identify an operating problem. An internal inspection is usually done only by the source personnel; however, in rare instances the agency inspector may also find one useful[a]. Such inspections should be done in the company of source personnel completely familiar with safety procedures and only during major outages when the units have been cooled, purged, and deenergized. Once inside the region(s) exhibiting unusual electrical readings, an observer would check for any or all of the following items:

1. Deposits on collection plates (should be 1/8" to 1/4" and dry),[2]
2. Wire plate alignment (should be ± 1/4", visually should not be able to see out-of-alignment electrodes),[2]
3. Presence of "clinkers" at bottom of electrodes,
4. Presence of broken wires,
5. Corrosion of electrodes, and
6. Eroded or plugged gas distribution plates.

The importance of conducting the internal inspection safely cannot be overemphasized. Personnel should not work alone, should have adequate respirators, should use grounding strips, and should follow all lockout procedures.

After each major outage, source personnel should perform an air load test on each field and record the results of the test in a convenient location. This test will clearly identify uncorrected malalignment or the presence of foreign objects left by personnel inside the unit. Also insulator high voltage leakage can be identified. The agency inspector should request such records whenever these problems are suspected.

The inspection of the precipitator should also include at least a brief review of the operating records kept by the source. Such records should obviously include the T-R set electrical data (hopefully analyzed by the operator, not just filed away). Also, the records should describe any significant maintenance work such as the addition of wire shrouds, adjustment of rappers, and the removal of wires. Concerning the latter item, there should

[a]Internal inspections are not recommended unless the inspector has received specific and detailed training in confined area entry.

be a drawing available indicating where wires had been removed and where on any given wire the failure had occurred. Based on the pattern of failures an operator can determine if there is some underlying problem leading to wire failure, such as malalignment. Obviously such problems should be corrected before the wire is replaced, otherwise the new wire will also soon fail. With such records both the source personnel and agency inspector can more easily determine what is reasonable and necessary to maintain continuous compliance.

2.3 REFERENCES

1. Richards, J., Hawks, R. and Szabo, M., "ESP Inspection Procedures - Operator and Agency Roles in Ensuring Continuous Compliance", In: Proceedings of Specialty Conference on Operation and Maintenance of Gas Cleaning Equipment, Air Pollution Control Association, April 1980, pp 41-50.

2. Ahrens, J., " A Coordinated Approach by a Central Group to Maintain Precipitator Compliance", In: Proceedings of Specialty Conference on Operation and Maintenance of Gas Cleaning Equipment, Air Pollution Control Association, April 1980, pp 51-60.

3. Neundorfer, M., " Electrode Cleaning Systems: Optimizing Rapping Energy and Rapping Control", In: Proceedings of the Symposium on the Transfer and Utilization of Particulate Control Technology, 1979.

3.0 FABRIC FILTERS

In fabric filter systems particulate is collected within a dust cake supported on either a woven or felted fabric. The fundamental collection mechanisms include impaction, interaction, diffusion, and in some cases electrostatic attraction. The latter has not been fully studied, therefore, its importance on a specific unit is difficult to quantify.[1] The collection efficiency is extremely high and any emissions which do occur are thought to be due to leaks through bag tears across poorly seated gaskets, cracks in welds, or high-velocity pinholes. As a result, the typical size efficiency curve does not have a strong particle size dependence.[2,3] For this reason, the outlet particle size distribution is often similar to the inlet distribution.

3.1 COMPONENTS AND OPERATION

The manner by which the fabric is cleaned and the means of mounting the bag in the housing are the two principal features used to classify fabric filters. For the purposes of these reports, the four broad categories listed below will be discussed separately.

Pulse jet
Reverse air (outside-to-inside flow)
Reverse air (inside-to-outside flow)
Shakers

Obviously there are a number of other types. For information concerning operating characteristics and components, see References 4 and 5.

3.1.1 Pulse Jet Fabric Filters

Example pulse jet filters are depicted in Figures 3-1 and 3-2. The bags are cylindrical and are supported on an interior cage which is suspended from the tube sheet. The particulate laden gas stream is admitted in the hopper area. The particulate is collected on the outside surface of the felted bags. The cleaned gas passes up the inside of the bags and into the clean air plenum above the tube sheet. Above each row of bags there is a compressed air supply line called a "blow tube." The line has either a hole or nozzle

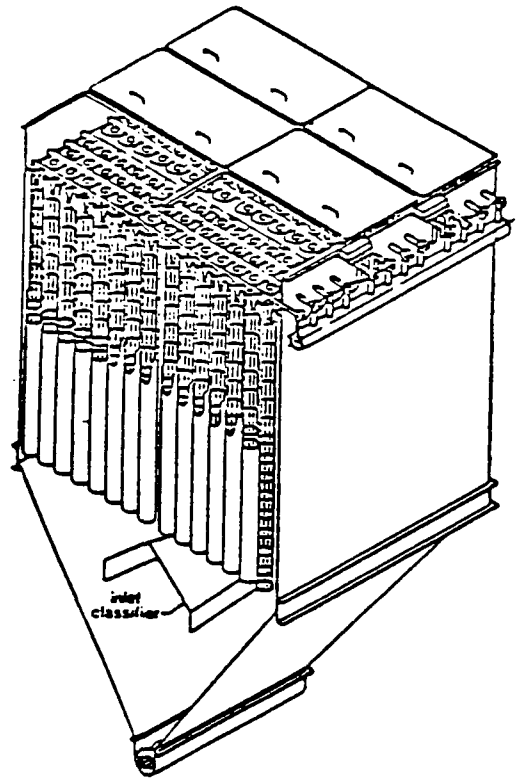

FIGURE 3-1. Pulse Jet Filter
(Courtesy of Environmental Elements Corporation)

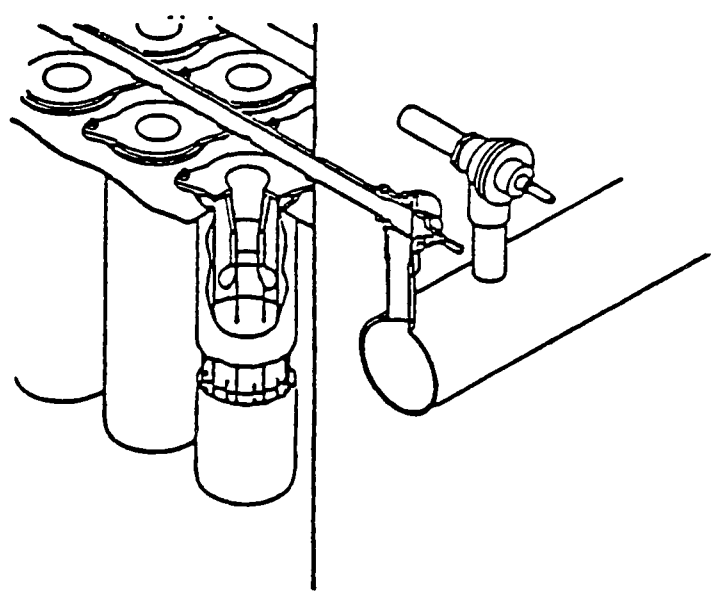

FIGURE 3-2. Pulse Jet Filter; Close-Up View of Air Manifold, Blow Tube, and Venturi
(Courtesy of Environmental Elements Corporation)

directed downward toward each bag. At regular intervals, a solenoid activated valve on each tube is opened momentarily, allowing a pulse of air to enter each bag in that row. The shock wave dislodges the cake. By this means, cleaning can be done without taking the unit off-line. The dislodged dust is collected within the hopper and is discharged through a rotary valve or similar device.

The pulse jet collectors normally operate at an air-to-cloth ratio (gas flow in acfm divided by available filtering cloth area) of 4 to 8, well above other collectors. Felted type material is used almost exclusively.

3.1.2 Reverse Air (Outside-to-Inside Flow)

These collectors tend to be single compartment, smaller units similar to the unit shown in Figure 3-3. The bags are supported on an inner cage which is again suspended from an upper tube sheet. The gas stream enters on the lower side of the hopper area and the gas flow pattern is the same as for the pulse jet collectors discussed earlier.

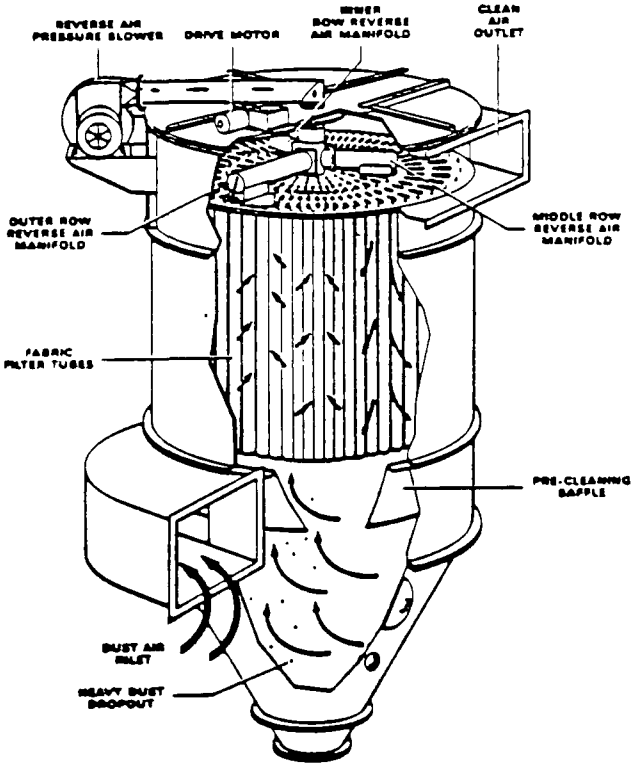

FIGURE 3-3. Reverse Air Fabric Filter (outside-to-inside flow) (Courtesy of the Carter Day Company)

Cleaning of the bags is usually done by a rotating arm located above the tube sheet. A small fan pulls filtered air for injection through the rotating arm and down through the bag.

These types of collectors usually operate at air-to-cloth ratios of 1 to 4. Unlike pulse jet collectors, woven fabrics are generally used.

3.1.3 Reverse Air (Inside-to-Outside Collectors)

The bags in this type of collector are mounted in a lower tube sheet and suspended from the roof of the compartment. Cages are not generally used, however, some bags are manufactured with anticollapse rings to aid dust discharge during cleaning. Gas flow is up through the bags, passing from the inside to the outside.

The bags are mounted in two or more compartments. Periodically, the chambers are isolated by means of dampers and filtered air is passed through from the outside of all the bags in the compartment.

Either a thimble or snap ring assembly is normally used to attach the bags to the tube sheet (Figure 3-4). These attachments are a common source

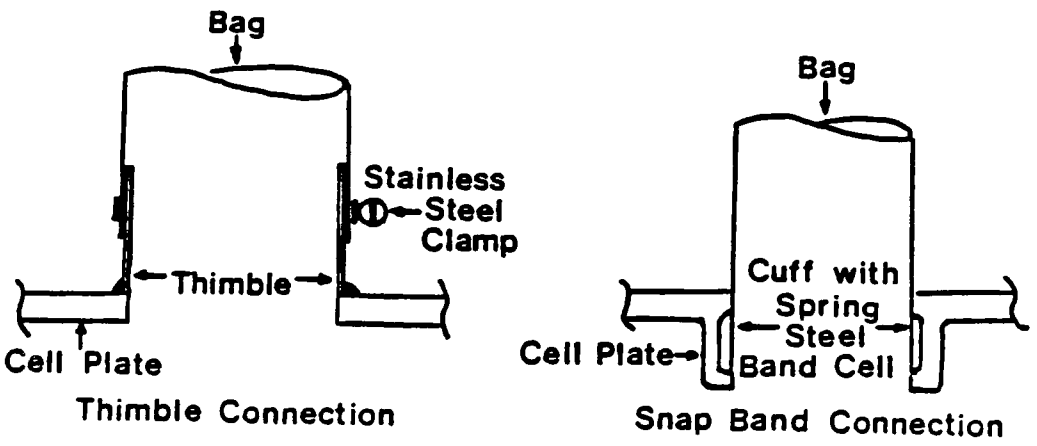

FIGURE 3-4. Bag-Cell Plate Attachments for Reverse Air (inside-to-outside) Baghouses

of operating problems. An adjustable hook or cap is used at the top of the bag to provide proper bag tension, a critical factor. These types of fabric filters often have precleaners and/or blast plates to reduce the amount of large sized abrasive particulate reaching the lower portion of the bags. Because of the gentle cleaning action and the type of bag mounting, this system can accept glass-fiber bags. For this reason, most high temperature (>400°F) units are of this type. Air-to-cloth ratios range from 0.5 to 3.0.

3.1.4 Shaker Collectors

These collectors resemble the reverse air (inside-to-outside flow) units with the exception that fabric cleaning is done by a shaker motor instead of reverse air. Cleaning is done compartment-by-compartment. Gas flow is up through the bags and outside to the "clean side". Typical air-to-cloth ratios are 1.0 to 3.0. Woven fabrics are used almost exclusively.

3.2 INSPECTION/MAINTENANCE

The inspection of all fabric filters begins with the visible emission observation. Of particular interest is the presence of short-term spikes during the cleaning of a specific compartment (reverse air units) or of a specific row (pulse jet units). Oxygen content of flue gas downstream of fabric filters is a useful indicator of ambient air inleakage problems which could lead to condensation on the bag. Pitot traverse data and/or fan data can be used to estimate the actual air-to-cloth ratio, a very important operating variable. Emissions are directly related to actual air-to-cloth ratio.[6,7,8]

3.2.1 Pulse Jet Filters

Each of the valves (Figure 3-2) which supply the blow tubes should be checked to confirm that adequate cleaning of each row of bags is being done. A firm "thud" should be audible if the valve is activated and is operational. The row being cleaned is easily identified by lightly resting a hand on the valve. Normally the rows are cleaned starting at one end and proceeding sequentially to the other end. Rows not being cleaned should be marked and recorded. If this condition has persisted for some time, it is probable that a substantial dust cake has accumulated on the outsides of the bags. This could lead to somewhat higher gas velocities and therefore higher particulate emissions through the remaining rows.

If all of the valves sound weak or if none are being activated, then the compressed air supply should be checked. The pressure gauge on the cleaning air manifold is usually in the range of 90 to 120 psig.[a] Lower values may indicate inadequate cleaning. In rare cases the supply line to a set of valves is inadvertently shut off.

The cleaning air supply tank should have a small drain at the bottom to periodically remove oil and water. Also the main air line coming to the pulse jet filter should have a dryer (type necessary depends partially on climate). Without provisions to remove water and oil, the bags can be "wetted" from inside leading again to a higher than anticipated static pressure.

The presence of any short-term puffs with a duration of 1 to 3 seconds is indicative of small holes or tears in the bags. When the row having the damaged bag(s) is pulsed, the dust cake bridging the hole is temporarily removed, leading to a short-term high emission rate until the hole is "healed" by a newly formed dust cake. Large holes and tears often do not reseal, thus leading to a continuous emission. The row causing short-term puffs should be identified by determining which row is being pulsed at the time of the spike.

The static pressure drop across the pulse jet collector should be checked by removing[b] the lines to the existing monitor and clearing the tap hole. Portable gauges supplied by the inspector can then be used to accurately measure the static pressure drop. High values indicate higher than normal gas flow rates, partial blinding of the fabric, or inadequate cleaning. Low values suggest large tears or serious ambient air infiltration on the clean side. The static pressure drop is not a very sensitive indicator of bag tears and holes.[9] If a detectable drop in static pressure drop has occurred, it is probable that a substantial fraction of the gas stream passes through the holes rather than the filter cake.

Severe air inleakage is often due to poorly seated access hatches on the top of the collector. Usually the air inleakage can be easily heard and felt when the problem is severe.

---

[a]Some brands are designed to operate at a much lower pressure, 15 to 20 psig. In these cases, the amount of air per square foot of bag surface is normally greater than the conventional type pulse jet filter.
[b]Often plant rules require that this is done only by plant personnel.

A pulse jet collector must be locked off before an internal inspection can be done. Once this is safely done, the clean side hatches can be removed to inspect the blow tubes and the venturis (if present). Clean side deposits indicate poor collection efficiency. During the early stages of equipment deterioration, poor efficiency can only be identified by examining deposits on the underside of the blow tubes, directly above each bag.

3.2.2 Reverse Air (Outside-to-Inside Flow)

The rate of solids discharge from the collector should be checked by observing the amount of solids being discharged to a waste bin or being transported along a screw conveyor. Solids discharge is relatively continuous with this type of collector, therefore, the rate of discharge needs to be observed for 1 to 5 minutes. Lower than normal rates can indicate any of the following:

1. Failure of the reverse air fan,
2. Failure of the internal cleaning arm,
3. Failure of the rotary discharge valve below the hopper,
4. Solids bridging within the hopper,
5. Reduction in the quantity of process gas treated due to serious air inleakage,
6. Substantial penetration through the bags, and
7. Low particulate matter generation rate at the process source.

All of these, with the exception of No. 7, are serious operating problems which demand the inspector's immediate attention. The first three conditions can be confirmed quickly, simply by observing the equipment. For combustion sources, air inleakage can be identified by measuring flue gas oxygen content levels at various locations before and after the collector. On other sources, potential sites for air inleakage such as flanges, welds, solid discharge valves and hatches should be checked for audible air inleakage.

The static pressure drop across the collector should be evaluated using the same procedure discussed earlier. Higher than normal levels again suggest inadequate cleaning or blinding of the outer bag surface due to moisture or oil entering with the gas stream. Low static pressure drops may be caused by numerous tears or holes in the woven fabric or by poorly attached bag

cage assemblies at the tube sheet. As in the case with pulse jet units, there must be numerous holes and/or tears before there is a noticeable drop in static pressure.

Internal inspection should be done only when the unit (fan, reverse air blower, cleaning arm and rotary valve) is locked off and all safety requirements are satisfied. Bag-to-bag abrasion, often caused by bent cages, can be identified by observing the bottom of the bags from the hopper access hatch.[a]

3.2.3 Reverse Air (Inside-to-Outside Flow)

The solids discharge from a typical multicompartment reverse air fabric filter is intermittent. There is significant solids discharge only during a short period while each of the compartments is undergoing cleaning. The discharge rate should be checked during one or more cleaning cycles. Reasons for inadequate solids discharge are the same as those discussed earlier for Reverse Air (outside-to-inside flow) collectors.

Static pressure drop across the entire collector should be measured with portable gauges. There should be no need to measure the pressure drop across each compartment since these must be the same. If there are compartment-by-compartment flow resistance differences, the flow of gas will automatically adjust to give equal static pressure drops.

This type of collector is often used for high temperature service. In such cases, the inlet gas temperature should be measured using a portable thermocouple and then compared with the on-site instrument. High temperatures are of concern only if the maximum rated temperature of the fabric being used is exceeded. Low temperatures indicate the potential for condensation of volatile compounds and/or water on the interior bag surfaces.

One problem often leading to low temperature levels is air inleakage upstream from the collector. On combustion sources this can be evaluated by measuring the flue gas oxygen content. Significant deviation from normal oxygen levels combined with low gas temperatures may indicate serious air inleakage.

---

[a]CAUTION: Opening of a hopper access hatch must be done with extreme care due to the potential for hot, free flowing solids behind the hatch which could lead to serious burns and/or suffocation.

Internal inspection can only be done when one or more of the compartments are isolated. Even then extreme care is warranted since most such collectors have some leakage of gas across the isolation dampers. Unless the compartment is pressurized by a clean air fan or the entire collector has been purged out, it is recommended that the inspector use a self contained rebreather or air-line respirator.[a]

If the clean side deposits are uniform and substantial (>1" to 2" deep throughout) it is very difficult to determine the source or sources of the problem. Normally most bag problems in this type of collector occur near the bottom, therefore, this area should be checked first. Common problems include bag abrasion on the opposite side from the inlet and cutting of bags on sharp thimbles. The latter may be aggravated by excessive tension which causes the fabric to rub against the sharp edge of the thimble during reverse air cleaning. Low bag tension can cause creasing of the bag at the bottom which results in abrasion and pinholes.

Solids buildup in bags can be checked by grabbing the bag just above the thimble. If the bag is full of solids, then no gas has been passing upward. If the hopper below is full, gentle massaging of the fabric will not be successful in cleaning the bag.

3.2.4 Shaker Collectors

This type of fabric filter is entirely analogous to the Reverse Air (inside-to-outside flow) collectors with the exception of the cleaning mechanism. Inspection is done in a similar fashion.

Due to the more strenuous cleaning action, bag tension is even more important. Excessive tension can result in bag cutting on the thimbles or bags being yanked free of the thimble clamp. These types of fabric filters also suffer most bag problems near the bottom, close to the tube sheet.

Leaks around poorly seated snap ring bags may also reduce collection efficiencies. Out-of-round rings or poor installation can cause these problems. The snap ring type of bag attachment is also vulnerable to inlet abrasion since there is no thimble to protect the bags from the turning gas stream.

[a]Internal inspections are not recommended unless the inspector has received specific and detailed training in confined area entry safety procedures.

3.3 REFERENCES

1. Donovan, R. P., Turner, J. H., and Abbott, J. H., "Passive Electrostatic Effects in Fabric Filtration," In: Second Symposium on the Transfer and Utilization of Particulate Control Technology, Vol. 1. Control of Emissions from Coal Fired Boilers, Venditti, F. P., Armstrong, J. A., and Durham, M. editors, U.S. Environmental Protection Agency Publication No. 600/9-80-039a, September 1980, pp. 476-493.

2. Turner, J., "Extending Fabric Filter Capabilities," J. of the Air Pollution Control Association, Vol. 24, No. 12, 1974.

3. Ensor, D. S., R. G. Hooper, and R. W. Schech, "Determination of the Fractional Efficiency, Opacity Characteristics, Engineering and Economic Aspects of a Fabric Filter Operating at a Utility Boiler," Electric Power Research Institute Report, EPRI FP-297, November 1976.

4. Billings, C., and Wilder, J., "Handbook of Fabric Filter Technology, Vol. I," APTD 0690, NTIS PB200648, GCA Corp., Boston, 1970.

5. Theodore, L., and Buonicore, A. J., Industrial Air Pollution Control Equipment for Particulates, CRC Press, Cleveland, 1976.

6. Hall, R. R., R. Dennis, and N. F. Surprenant, "Fibers, Fabrics, Face Velocity and Filtration," In: A Specialty Conference on the User and Fabric Filtration Equipment III, E. R. Fredrick, editor, APCA Specialty Conference Proceedings, 1978, pp 156-169.

7. Dennis, R. H. A. Klemm, "Verification of Projected Filter System Design and Operation," in Symposium on the Transfer and Utilization of Particulate Control Technology, Vol. 2, Fabric Filters and Current Trends in Control Equipment, Venditti, F. P., J. A. Armstrong, and M. Durham, Editors, U.S. Environmental Protection Agency, Publication No. 600/7-79-044b, February 1979, pp. 143-160.

8. Leith, D., M. W. First, M. Ellenbecker, and D. D. Gibson, "Performance of a Pulse-jet Filter at High Filtration Velocities," In: Symposium on the Transfer and Utilization of Particulate Control Technology: Vol. 2, Fabric Filters and Current Trends in Control Equipment, Venditti, F. P., J. A. Armstrong, and M. Durham, editors, U.S. Environmental Protection Agency, Publication No. 600/7-79-044b, February 1979, pp. 11-26.

9. Engineering-Science, Inc., "An Investigation of a Fabric Filter Emissions Correlation," Final Report to the U.S. Environmental Protection Agency, Contract 68-01-4146, Task 69, May 1980.

4.0 WET SCRUBBERS

Wet scrubbers comprise a very large and diverse set of control devices, all of which share similar particle collection mechanisms. Inertial impaction and Brownian diffusion are the dominant collection mechanisms in most conventional scrubbers. Accordingly, these scrubber systems generally exhibit strong particle-size-dependent performance. Among scrubber types there are substantial differences with regard to the effectiveness of the mechanisms, the greatest differences occuring in the particle size range of 0.2 to 2.0 μmA. Particles in this size range scatter light effectively, therefore, plume opacity is high when the particulate penetration in this size range is high. For this reason, opacity is a good diagnostic tool. Unfortunately, it is not always easy to evaluate the actual opacity due to condensed water interference.

A second indication of high particulate penetration is a decrease in the static pressure drop. Usually when the pressure drop is high, the inertial impaction conditions are optimized and the penetration in the 0.2 to 2.0 micron range is minimized. Pressure drop can be accurately measured, therefore, it is a very useful diagnostic tool. If either the opacity or pressure drop has changed significantly since the baseline period, a more detailed inspection is warranted.

4.1 COMPONENTS AND OPERATION OF PARTICULATE SCRUBBERS

Because of their diversity, it is difficult to classify scrubbers into distinct generic categories. Scrubbers that are grouped on the basis of similar mechanisms may have greatly varying geometric arrangements. In this discussion major categories of scrubbers are arranged in an approximate ascending order of performance capabilities and energy requirements.

The scrubber liquid may be used for particle collection in several distinct ways. The most common is generation of droplets, which are then intimately mixed with the gas stream. Particle collection can also be achieved on water layers or sheets surrounding some form of packing material. In this case the gas stream is forced to negotiate an intricate path around the individual packing elements. The high velocity passage of gas may also generate "jets" of liquid in which particle collection may occur.

4.1.1 Preformed Spray Scrubbers

Preformed spray scrubbers require the least energy of the various scrubbers and they consequently allow the highest particulate penetration, especially of small-diameter particles. Most preformed spray scrubbers are highly efficient only for particles larger than 10 μmA diameter and are relatively less efficient for particles smaller than 5 μmA diameter.

A spray tower is the simplest type of preformed spray scrubber, consisting of a chamber containing an array of spray nozzles (Figure 4-1). Particulate-laden gases pass vertically up through the tower while the liquid droplets fall by gravity countercurrent to the gas flow. Particle collection is primarily by impaction. While the spray scrubber has low particle removal capability, it is often useful for treating effluent gas streams having high mass loadings of large diameter particulate matter.

The cyclonic spray tower is similar to the spray tower scrubber except that the gas stream is given a spiral motion. In one typical configuration particulate-laden gases enter the scrubber vessel tangentially at the bottom and pass upward in a spiral motion around a centrally located array of spray nozzles. Droplet migration is crosscurrent to the gas flow. A vane type cyclonic scrubber utilizes a system of vanes rather than a tangential inlet to impart cyclonic motion. Other cyclonic scrubbers consist of multiple miniature cyclone tubes, each with a separate liquid supply. This design utilizes a downward flow pattern for the gases in contrast to the typical upward flow. Cyclonic spray towers generally operate with a static pressure drop of 4 to 8 in. W.G. Penetration of particles less than 2 μmA in diameter is typically quite high.[1]

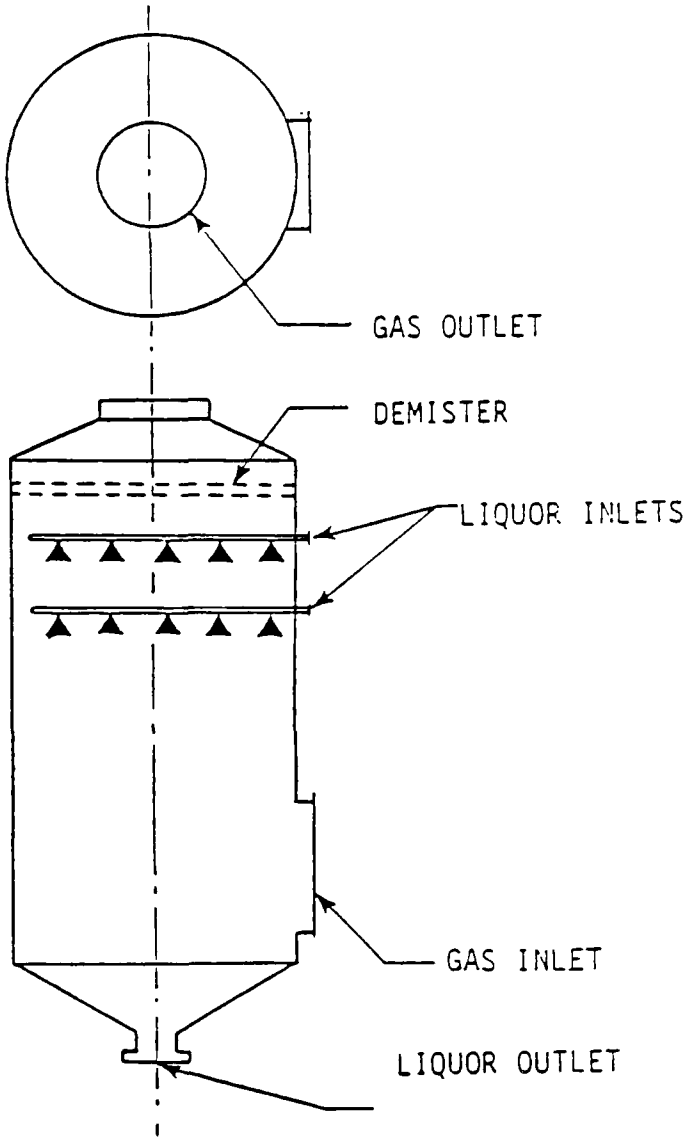

FIGURE 4-1. Spray Tower.

4.1.2 Tray-Type Scrubbers

A tray-type scrubber typically consists of a vertical tower with one or more perforated plates mounted transversely inside. In such a scrubber the liquid flows from top to bottom while the gas flows from bottom to top. Gases in the tray-type scrubber mix with the liquid as it passes through the openings in the plates.

The perforated plates of a tray-type scrubber are often equipped with impingement baffles or bubble caps over the perforations forming impingement surfaces. As the gas passes upward through a perforation, it is forced to make a 180-degree turn into a layer of liquid. The gas bubbles through the liquid, causing the particulate to impinge against the liquid sheet. The

impingement baffles are below the liquid level on the perforated plates and for this reason are continuously washed clean of collected particles. Penetration through a typical impingement plate is low for particles larger than 1 μmA^2, but penetration of submicrometer particulate is higher than with some higher-energy scrubbers. Pressure drop through a typical baffle plate is roughly 1.5 in. W.G. per stage. Addition of plates increases the scrubber pressure drop, but does not proportionally decrease the penetration of submicrometer particulate.

4.1.3 Packed-Bed Scrubbers

In the typical packed-bed scrubber the liquid is introduced at the top of the packed bed and trickles down through it; the packing breaks down the liquid flow into a film with a large surface area. The liquid can also be introduced concurrent with gas flow or crosscurrent with gas flow. Packing materials include raschig rings, pall rings, berl saddles, tellerettes, intalox saddles, and materials such as crushed rock. Packed beds are also constructed with metal grids, rods, or fiberous pads. These scrubbers are often used for gas transfer or gas cooling, both of which are facilitated by the large liquid surface area provided on the packing.

Plugging of a bed can occur if the gas to be treated is too heavily laden with solid particles. Moving-bed scrubbers have been developed that have less propensity for plugging. These scrubbers are packed with low-density plastic spheres, which are free to move within the packing retainers.

Packed-bed scrubbers are reported to have low penetration for particle sizes down to 3 μmA and can sometimes remove a significant fraction of particulate in the range of 1 to 2 μmA. The standard countercurrent arrangement requires the greatest liquid flow and can best handle heavier loadings. Crosscurrent packed-bed scrubbers require much less liquid flow, usually operate at lower static pressure drops, and rarely suffer from plugging. Concurrent packed-bed scrubbers are reportedly more efficient than other packed-bed scrubbers for the smaller particulates, but they typically operate at higher pressure drops.

4.1.4 Venturi and Orifice Scrubbers

Venturi and orifice scrubbers are perhaps the most common particulate removal devices, in part because they allow lower penetration of small particles than most other types of scrubbers. These scrubbers accomplish superior particulate collection by generating small liquid droplets in the turbulent zone in a manner that creates a high initial relative velocity between the droplets and the particulate. Inertial impaction capture of particulate by the scrubbing liquid is more efficient in these highly turbulent processes, but a price is paid in energy consumption to achieve the low penetration.

4.1.4.1 Venturi Scrubber - The simple venturi scrubber, often called a gas-atomizing spray scrubber, consists of a series of sprays upstream from a converging and diverging "throat" section (Figure 4-2). As the gas approaches the venturi throat, the velocity and turbulence increase. The high gas turbulence atomizes the liquid into small droplets and increases interaction between the droplets and the particulate. Pressure drops in venturi scrubbers can range from less than 4 to 100 in. W.G.

4.1.4.2 Variable Throat Venturi Scrubbers - Pressure drop and venturi performance are partially dependent on gas velocity through the venturi. Several variations of the standard venturi scrubber have been developed to allow the venturi throat dimensions to be changed as gas flow rates change. Among these scrubbers are the plumb-bob venturi, the flodded-disc venturi, the moveable-blade venturi, the radial-flow venturi, and the variable-rod venturi.

4.1.4.3 Orifice Scrubber - In an orifice scrubber, sometimes referred to as an entrainment or self-induced spray scrubber, the gas stream passes over a pool of scrubbing liquid at high velocity just before entering an orifice. The high velocity of the gas induced ("entrains") a spray of scrubbing liquid droplets, which interact with the particulate in and immediately after the orifice. Orifice scrubbers have moderate pressure drops (3 to 15 in. W.G.) and low penetration of particulate 2 to 3 μmA in diameter and larger.

4.1.5 Mechanically Aided Scrubbers

The mechanically aided scrubbers utilize a mechanical rotor or fan to shear the scrubbing liquid into dispersed droplets. These scrubbers use a specially designed stator and rotor arrangement which produces very finely

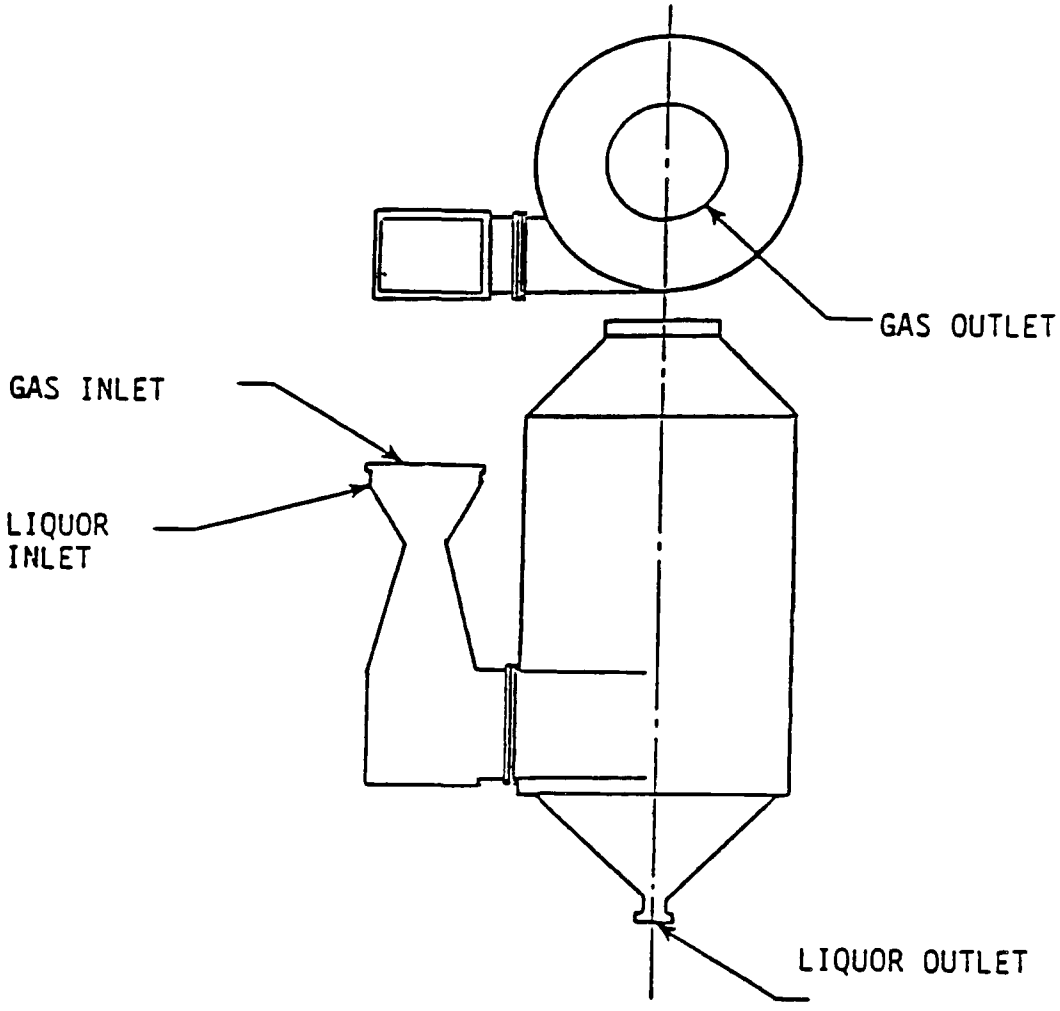

FIGURE 4-2. Venturi Scrubber.

divided liquid droplets that are effective in the capture of fine particulate. The low penetration of fine particulate, however, is achieved at a high energy cost. Both wet fan and disintegrator type mechanically aided scrubbers are subject to particulate buildup or erosion at the rotor blades, so they are often preceded by precleaning devices for removing coarse particulate.

4.2 INSPECTION PROCEDURES

4.2.1 Opacity and Gas Flow Rate

The inspection of all particulate wet scrubbers starts with an evaluation of plume opacity, weather conditions permitting. The residual plume

(after steam plume dissipation) has a direct relationship to the mass concentration in the effluent gas. Procedures for evaluating wet scrubber opacity are discussed in Chapter 10.

Gas flow rate through the wet scrubber should be estimated by use of a pitot tube or by analyses of process operation. The flow rate is an important variable since it often determines the relative velocities between the particles and the water (droplets or sheets) and therefore determines the effectiveness of inertial impaction.

4.2.2 Static Pressure Drop

Static pressure measurements should be made before and after the wet scrubber.[a] Often it is necessary to clean out the existing static pressure taps prior to making the measurement since these taps are prone to plugging. At the same locations, the gas temperature should be measured. (Note that water droplet impaction on the temperature probe may not allow measurement of a true dry bulb temperature.)

Performance of wet scrubbers can be evaluated by comparisons of the present "power input" (usually proportional to pressure drop) to the baseline level. This approach, called the Contact Power Method, is described in references 3 and 4.

The Contact Power approach is based on the concept that penetration is directly related to the energy input into the gas-liquid contact.[5-9] For gas-atomized scrubbers, the power consumption is approximated by the equation

$$P_G = 0.158\ \Delta P \qquad \text{Eq. 4-1}$$

where

P_G = power consumed, hp/1000 acfm.
ΔP = gas phase pressure drop, in. W.G.

When the liquid stream adds a significant fraction of the total energy, Equation 4-2 is also used. The total energy is the sum of the gas and liquid phase power consumption (Equation 4-3).

[a]In the case of venturi scrubbers, the downstream tap should be located after the elbow or in the cyclonic separator in order to avoid boundary layer separation phenomenon.

$$P_L = 0.583\ P_f L \qquad \text{Eq. 4-2}$$

where

P_f = fluid pressure, psig.
L = liquid-to-gas ratio, gpm/1000 acfm.

$$P_T = P_G + P_L \qquad \text{Eq. 4-3}$$

The scrubber collection efficiency is then expressed as shown in Equation 4-4.

$$N_T = \theta P_T^{\beta} \qquad \text{Eq. 4-4}$$

where

N_T = number of transfer units, $\ln \left\{ \frac{\text{inlet grain loading}}{\text{outlet grain loading}} \right\}$, dimensionless.
P_T = total power consumption, hp/1000 acfm.
θ, β = constants, dimensionless.

The constants are parameters dependent on the characteristics of the particulate matter. Using this approach it is assumed that there are no independent effects due to throat velocity, liquid-to-gas ratio, scrubber design and other parameters.

In certain cases it is possible to achieve good correlations using this approach. Figure 4-3 shows the relationship between outlet loadings and static pressure drop for a set of scrubbers on coal-fired boilers. Hesketh[5] has developed an empirical equation relating to static pressure drop and penetration. As shown in Figure 4-4 there is a good relationship between the two parameters.

$$P_t = 3.47\ \Delta P^{-1.43} \qquad \text{Eq. 4-5}$$

where

P_t = penetration, dimensionless.
ΔP = gas phase pressure drop, 1 in. W.G.

The contact power analysis indicates whether sufficient energy is being expended. It can lead to erroneous conclusions if there has been a major shift in the inlet particle size distribution. Also, physical problems which can lead to excess emissions regardless of power input can also invalidate a contact power analysis. Such problems include poor gas-liquid distribution (i.e. venturi throat), particle regeneration, and particle nucleation. These can be detected only by increased opacities. The Contact Power Correlations also do not appear to be valid when there is significant condensation of water vapor in the scrubber or when the liquid-to-gas ratio is below 5 gallons per 1000 ACF.

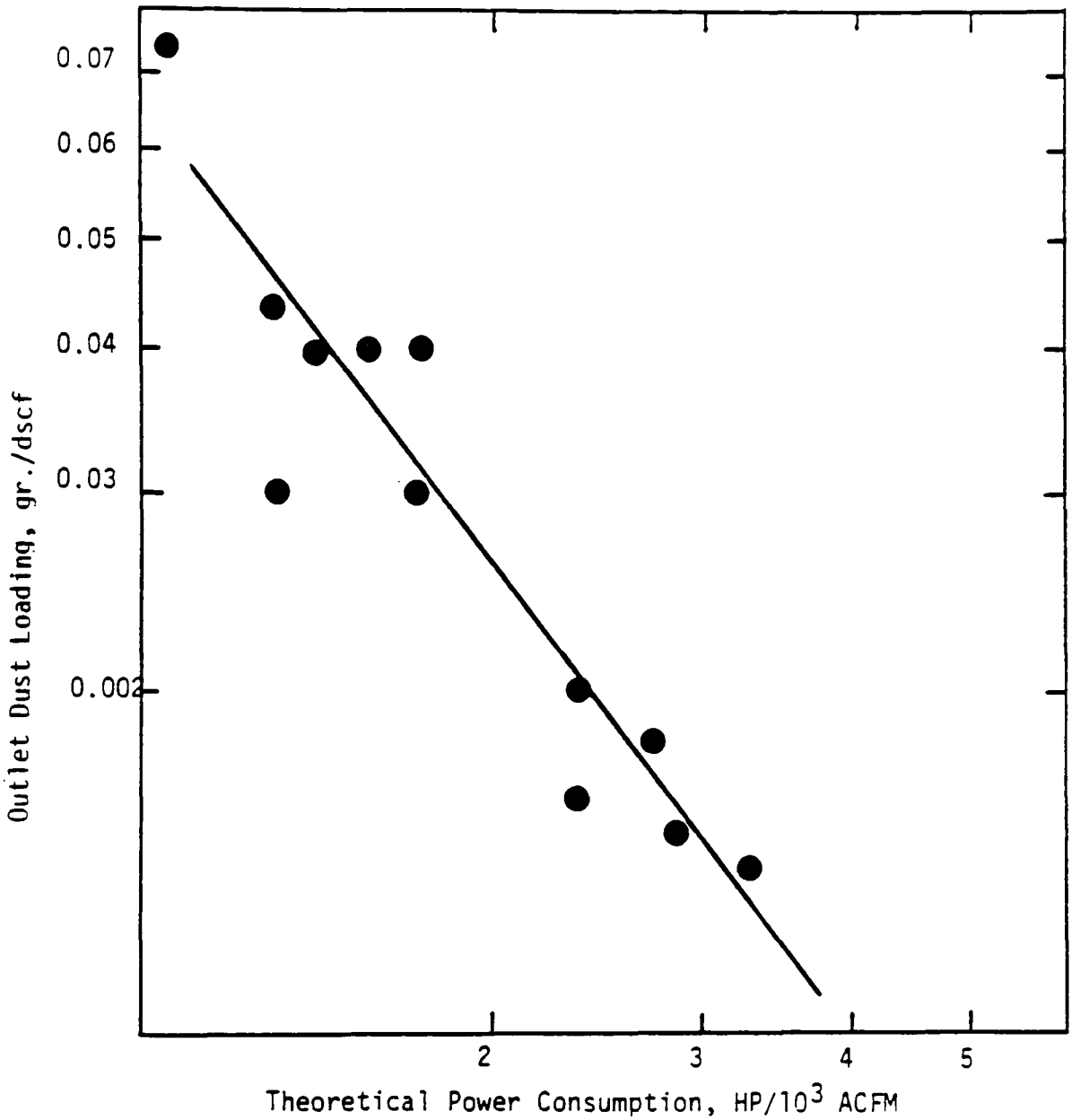

FIGURE 4-3. Correlation of a Coal-Fired Boiler Scrubber Outlet Dust Loading with Theoretical Power Consumption[9]

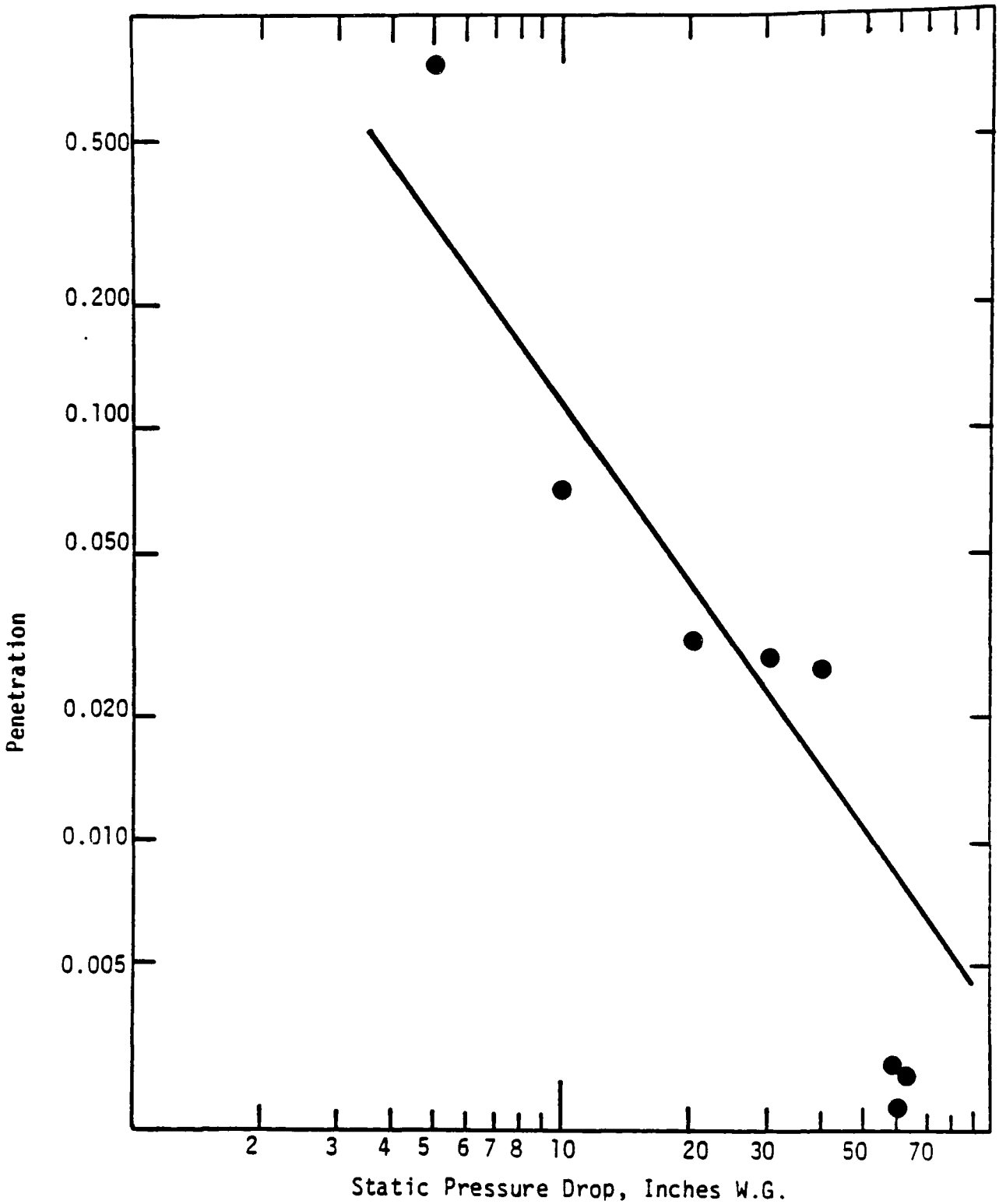

FIGURE 4-4. Comparison of Predicted Penetration as Calculated in Equation 4-5 and Measured[5]

4.2.3 External System Inspection

The components of the wet scrubber system should be inspected on a regular basis. This usually does not require much time and often emerging performance problems can be readily identified.

4.2.3.1 Demister - Demister problems are usually caused by plugging or scaling from excessive material buildup or mechanical failures. One easily identifiable symptom is the carryover and eventual fallout of droplets from the scrubber stack. This is usually caused by reentrainment of the scrubbing liquor as it passes through openings in the partially blocked demister at higher than design velocities. Another sign of demister failure is the buildup of material around the lip of the stack. This carryover of material can also buildup on the fan blades and cause severe vibrations which should be readily apparent.

A properly operating demister washing system should prevent excessive material buildup from occurring. The inspection should include an investigation into the type and frequency of demister washing and the quality of the washing water. If the water has a high solids content, a cleaner water source may be necessary.

The most accurate method of determining demister performance is the measurement of the static pressure drop across the demister. The normal pressure drop range is between 0.5 and 2.0 inches of water with most applications less than 1.0 inches. Any measurement outside of this range indicates significantly decreased efficiency of the demister.

4.2.3.2 Throat (Venturi Scrubbers)- The inspection of the throat of a venturi scrubber should include an evaluation of the ease of access to the liquor distribution components. If the nozzles or weirs are not easily accessible, this may mean that regular maintainence is very difficult and that maldistribution may occur. This problem is particularly acute when the nozzles are susceptible to abrasion and plugging.

At the point of water introduction into the throat, a thermocouple should be used to measure the gas inlet temperature. A temperature greater than 300°F can be an indication of potential operating problems if the gas stream

contains high organic or metallic vapors. Upon contact with the liquor in the throat these vapors will condense to form submicrometer particles. Often the particles form after passing the zone of optimum inertial impaction, hence, penetration of these particles is high.

The use of recirculated liquor with a high solids content may also lead to problems when the entering gas stream is greater than 300°F. Some of the atomized liquor droplets may evaporate to dryness releasing a "regenerated" particle. Thus, a small degree of evaporation can significantly increase mass emissions from the scrubber.

If the venturi has a variable throat, the relative position (open or closed since baseline tests) should be noted. This position has a large effect on throat pressure drop since this changes the cross sectional area available for the liquor and gas to pass through. As the throat area decreases, the relative droplet particles velocities increase, hence, penetration is reduced.

4.2.2.3 Shell - The exterior of the scrubber shell is inspected for corrosion and erosion. Corrosion is quite probable if the shell construction material is carbon steel and the pH of the recirculated liquor is less than 6. The problems caused by erosion usually occur in areas of high velocity and direct contact of the gas-liquor stream. The most common areas of damage are the elbow of the venturi, opposite the tangential inlet to the cyclonic separator, and the inlet to the venturi throat.

4.2.3.4 Precooler - The presence of a precooler should be noted during the inspection. Certain types of problems associated with the temperature of the gas stream as discussed under the throat inspection procedures above can be remedied through the use of a precooler. The quality of the water used in the precooler should be determined. Since most of this water evaporates, a high solids content can significantly increase the mass loading of the gas stream that enters the throat.

4.2.3.5 Sump, Recirculation Line, Make-up Line and Purge Line - An attempt should be made to make an estimate of the liquor recirculation, make-up and purge rates if at all possible. The most suitable location for the recirculation and make-up rate estimates is at the point of discharge into the

recirculation tank. The purge rate estimate can be made at the settling pond or lagoon. If there is some apparent or suspected problem with the scrubber, a sample of the recirculation liquor can be obtained from the top of the recirculation tank. This sample can be analyzed to determine if it has any properties which might adversely affect the system. At this time the temperature and pH of the recirculation liquor can also be measured. In order to document the recirculation system, a flow diagram of the scrubber's piping should be drawn.

The static pressure drop across the demister should be measured. Pluggage of this can lead to reduced gas flow through the wet scrubber or to carryover of water droplets. The latter can result in fan imbalance or local fallout. Static pressure drop across demisters normally range from 0.5 to 3.0 inches W.G.

Internal inspection of wet scrubbers is normally not necessary or advisable. It is usually possible to check for nozzle pluggage or poor liquor spray patterns by viewing the nozzles from an external hatch (when the unit has no effluent gas passing through and has been purged). Other problems can be identified equally well simply from the viewing ports of a hatch[a]. The entry into a wet scrubber should be done only by plant maintenance personnel cognizant of potential damage which can be done to corrosion resistant linings, trays and other components.

[a]Hatches should be opened only by plant personnel, and all safety procedures should be fully satisfied.

4.3 REFERENCES

1. Theodore, L., and Buonicore, A. J., Industrial Air Pollution Control Equipment for Particulates, CRC Press, Cleveland 1976.

2. Calvert, S., J. Goldshmid, D. Leith, and D. Mehta, Wet Scrubber System Study, Volume I: Scrubber Handbook, EPA-R2-72-118a, August 1972.

3. Engineering-Science, "Scrubber Emission Correlation," Final Report to U.S. EPA, Contract No. 68-01-4146, Task Order 49, 1979.

4. Semrau, K. et al., "Energy Utilization by Wet Scrubbers," EPA Report 600/2-77-234, November 1977.

5. Semrau, K. T., C. L. Witham, and W. W. Kerlin, "Energy Utilization by Wet Scrubbers," EPA-600/2-77-234, November 1977.

6. Semrau, K. T., and C. L. Witham, "Wet Scrubber Liquid Utilization," EPA-650/2-74-108, October 1974.

7. Strauss, W., Industrial Gas Cleaning, 2nd Edition, Pergamon Press, Inc., New York, N.Y., 1975.

8. Hesketh, H., "Fine Particle Collection Efficiency Related to Pressure Drop, Scrubbant and Particle Properties, and Contact Mechanism," J. Air Pollution Control Association, Volume 24, No. 10, October 1974, pp. 939-942.

9. Ranade, M. B., and Kashdan, E. R., "Design Guidelines for an Optimum Scrubber System," Second Symposium on the Transfer and Utilization of Particulate Control Technology, U.S. Environmental Protection Agency Publication EPA-600/9-80-039a, September 1980, pp. 538-560.

5.0 MECHANICAL COLLECTORS

Mechanical collectors comprise a broad class of particulate control devices that utilize the mechanisms of gravity settling, inertial, and dry impaction. Performance capability is limited to the relatively large particle size ranges. Because of this limitation and increasing regulatory requirements, use of mechanical collectors has gradually declined and they are now used primarily as precleaners; although in certain applications, mechanical collectors are adequate. They are reasonably tolerant of high dust loadings and are not susceptible to frequent malfunction if properly designed and operated.

The principal diagnositc tool for evaluating mechanical collector performance is the static pressure drop. Other performance indicators include opacity and solids discharge rate.

5.1 COMPONENTS AND OPERATION

In a cyclone[a], a vortex is created within the cylindical section by either injecting the gas stream tangentially or by passing the gas stream through a set of spin vanes. Due to inertia, the particles migrate across the vortex gas streamlines and concentrate near the cyclone walls. Near the bottom of the cyclone cylinder the gas stream makes an 180 degree turn and the particles are discharged either downward or tangentially into hoppers below. The treated gas passes upward and out of the cyclone.

5.1.1 Simple cyclones

The simple cyclone consists of an inlet, cylindrical section, conical section, gas outlet tube, and dust outlet tube. A typical tangential inlet, axial outlet simple cyclone is shown in Figure 5-1.

[a]Only cyclones and multi-cyclones are addressed in this manual. For information on the other various types of mechanical collectors, refer to the Particulate Control Techniques Document, Second Edition[1].

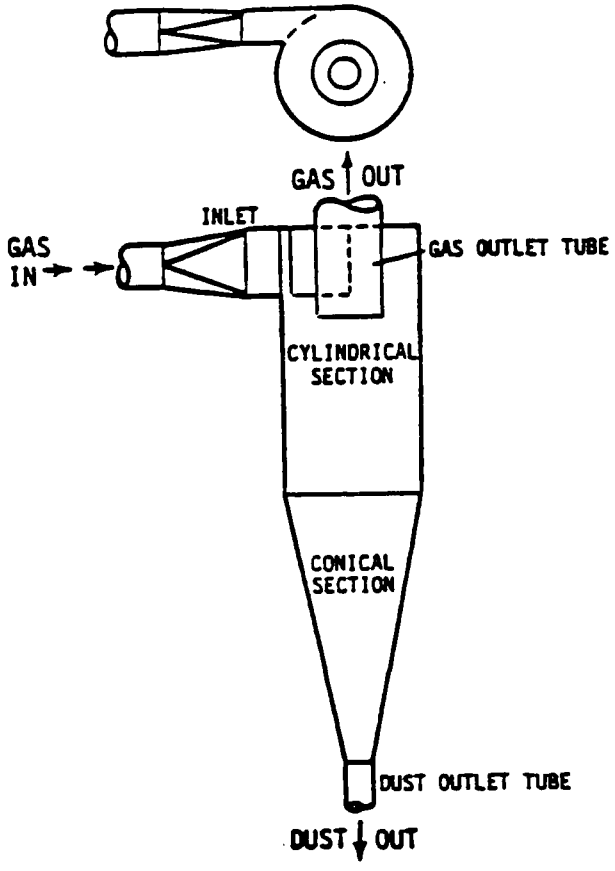

FIGURE 5-1. Typical Simple Cyclone

Particle separation is a function of the gas flow throughout the cyclone cylindrical diameter. At higher gas flow rates and smaller cylinder diameters, the particle inertia is greater resulting in higher collection efficiency. There is an upper limit, however, where the increased turbulence caused by higher gas velocities can disrupt particle concentration.

Medium efficiency single cyclones are usually less than 12 feet in diameter and operate at static pressure drops of 2 to 6 inches W.G. Overall collection efficiency is a function of the inlet particle size distribution.

5.1.2 Multiple cyclones

A multiple cyclone consists of numerous small-diameter cyclones operating in parallel. The high-efficiency advantage of small-diameter tubes is obtained without sacrificing the ability to treat large effluent volumes.

The individual cyclones, with diameters ranging from 3 to 12 inches, operate at pressure drops from 2.0 to 6.0 inches W.G. The inlet to the collection tubes is axial, and a common inlet and outlet manifold is used to direct the gas flow to a number of parallel tubes. The number of tubes per collector may range from 9 to 200 and is limited only by space available and by the ability to provide equal distribution of the gas stream to each tube. Properly designed units can be constructed and operated with a collection efficiency of 90 percent for particles in the 5 to 10 μmA range.[1] Factors which may contribute to reduced performance include erosion, plugging, corrosion and hopper recirculation.

Hopper recirculation in reverse flow type system occurs when tubes at the rear of the bank have a slightly lower static pressure drop. This can occur whenever flow distribution is nonideal or when the outlet tubes are shorter than those in the front (a common design). In these cases a portion of the gas in the front tubes can pass out the bottom and then enter the discharge of tubes in the back rows.

Hopper recirculation can lead to substantially reduced collection efficiency. Some of the ways to minimize this problem include segregation of the hopper and equalizing the lengths of all discharge tubes.

Ambient air inleakage into the hopper area can interfere with the dust discharge in the tubes and lead to increased emissions. These leaks may occur at hopper flanges, access hatches or through the solids discharge valves. Severe leakage on multicyclones serving combustion systems can be identified by measurement of the flue gas oxygen content before and after the collection.

Plugging of the gas inlet vanes leads to partial or total failure of individual tubes to establish an adequate vortex. Partial plugging allows dust penetration through the affected tube. Complete plugging results in an

increased flow of gas through the remaining tubes and an increase in overall collector static pressure drop. Partial plugging of a significant number of tubes can cause variation in pressure drop from tube to tube, cause gas short circuiting through the dust hopper, and cause an increase in dust reentrainment at the tube dust outlet.

Plugging of outlet tubes or the solids discharge is common. The latter is generally due to poor hopper discharge practices which allow solids to periodically accumulate to the bottom of the tubes. Further information on mechanical collectors can be found in references 1-6.

5.2 INSPECTION PROCEDURES

Static pressure taps should be installed on the inlet and outlet ducts so that the static pressure drop can be measured on each inspection using portable gauges. Since these taps often plug, the tap should be cleared before attempting any measurements. Shifts from a baseline static pressure level may indicate internal problems and reduced particulate collection efficiency. Comparison with baseline levels is done by correcting gas flow rate and gas temperature data back to levels during the baseline period. This is done using Equation 5-1.

$$\Delta P_{insp} = \Delta P_{baseline} \left\{ \frac{(Q_{insp})^2}{(Q_{baseline})^2} \frac{(d_{insp})}{(d_{baseline})} \right\} \qquad \text{Eq. 5-1}$$

where

Q = flowrate, ACFM
d = density factor, dimensionless

The gas densities can be obtained by use of a psychrometric chart shown in Figure 5-2. To get a density factor, the humidity must be roughly estimated.

For units serving combustion sources, flue gas oxygen content should be measured on a routine basis at the tap holes. This value should be compared with typical values for the specific unit to determine if there is deterioration of the unit. An increase of more than 0.5% O_2 across the collector is a sign of excessive air inleakage.

The rate of solids discharge should be checked frequently. Bridging of solids in the hopper, failure of the solids discharge valve, or severe internal problems may all be identified by this simple technique. All of these demand immediate attention.

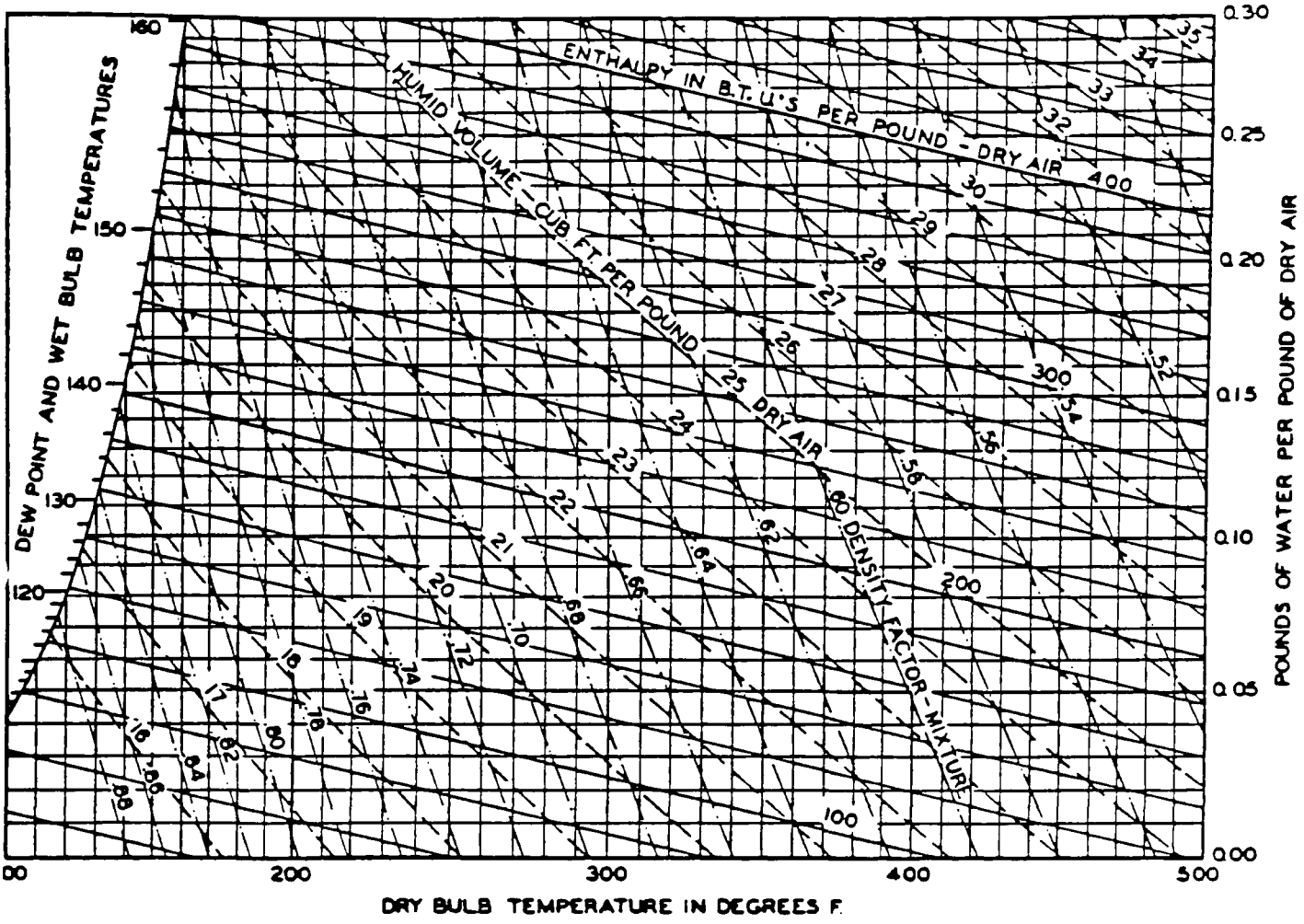

FIGURE 5-2. Psychrometric Chart for Humid Air
(Reprinted with permission of American Air
Filter, Louisville, Kentucky)

Internal inspections should be conducted by plant personnel, at a minimum on an annual basis. These should be conducted by personnel qualified in proper confined area entry procedures and during a major outage after the unit has been purged out. The internal inspection should identify plugging, erosion, and corrosion problems. In some cases it may be advisible to use tracers or smoke to identify gasket and weld leaks.

5.3 REFERENCES

1. Theodore, L. and Buonicore, A.J., Industrial Air Pollution Control Equipment, CRC Press, Cleveland, Ohio, 1976, p. 65.

2. Licht, W., Air Pollution Control Engineering, Marcel Dekker, Inc., 1980.

3. Baxter, W., In: Air Pollution, Vol II, 3rd Edition, A. Stern, editor, Academic Press, New York 1977.

4. Strauss, W., Industrial Gas Cleaning, 2nd ed., Pergamon Press, 1975, p. 213.

5. Crawford, M., Air Pollution Control Theory, McGraw-Hill, Inc., 1976, p. 236.

6. Schneider, A.C., "Mechanical Collectors," In: Handbook for the Operation and Maintenance of Air Pollution Control Equipment, Cross, F. L. and Hesketh, H. E., editors, Technomic Publishing Co., Westport, Ct., 1975, pp. 41-68.

6.0 CARBON BED ADSORPTION SYSTEMS

Carbon adsorption is a technique for the removal of organic vapors from a gas stream. The adsorption process is made possible through the use of specially "activated" carbon adsorbent which is highly porous and possesses fine capillaries. These attributes result in a very high surface-to-volume ratio. Through capillary action and secondary bonding, the activated carbon can adsorb onto its surface large quantities of volatile organics.

6.1 COMPONENTS AND OPERATION

In a typical carbon adsorption unit, as shown in Figure 6-1, the organic vapor laden gas stream passes through a filter to remove particulate matter and then through a cooler to reduce the temperature to less than 38°C. A blower then forces the gas stream through one of the carbon beds. The organic vapors are adsorbed by the carbon and the purified air flows to the atmosphere. In order to have continuous operation, a second carbon bed is being regenerated. Regeneration is necessitated when the carbon becomes saturated with organics.

Adsorption of a vapor by activated carbon occurs in two stages. Initially, adsorption occurs at an efficiency approaching 100 percent, but as the retentive capacity of the carbon is reached, traces of the vapor begin to appear in the exit air stream. This is called the breakthrough point of carbon beyond which the efficiency of removal decreases rapidly.

Eventually, the vapor concentrations at the inlet and exit become equal as the carbon becomes saturated having adsorbed the maximum amount of vapor that it can adsorb at the specific temperature and pressure. Figure 6-2 graphically illustrates the deterioration of performance as the active sites on the carbon surface are depleted.

In the regeneration process, the organics are desorbed from the carbon by passing either steam or hot gases through the bed. The temperature of

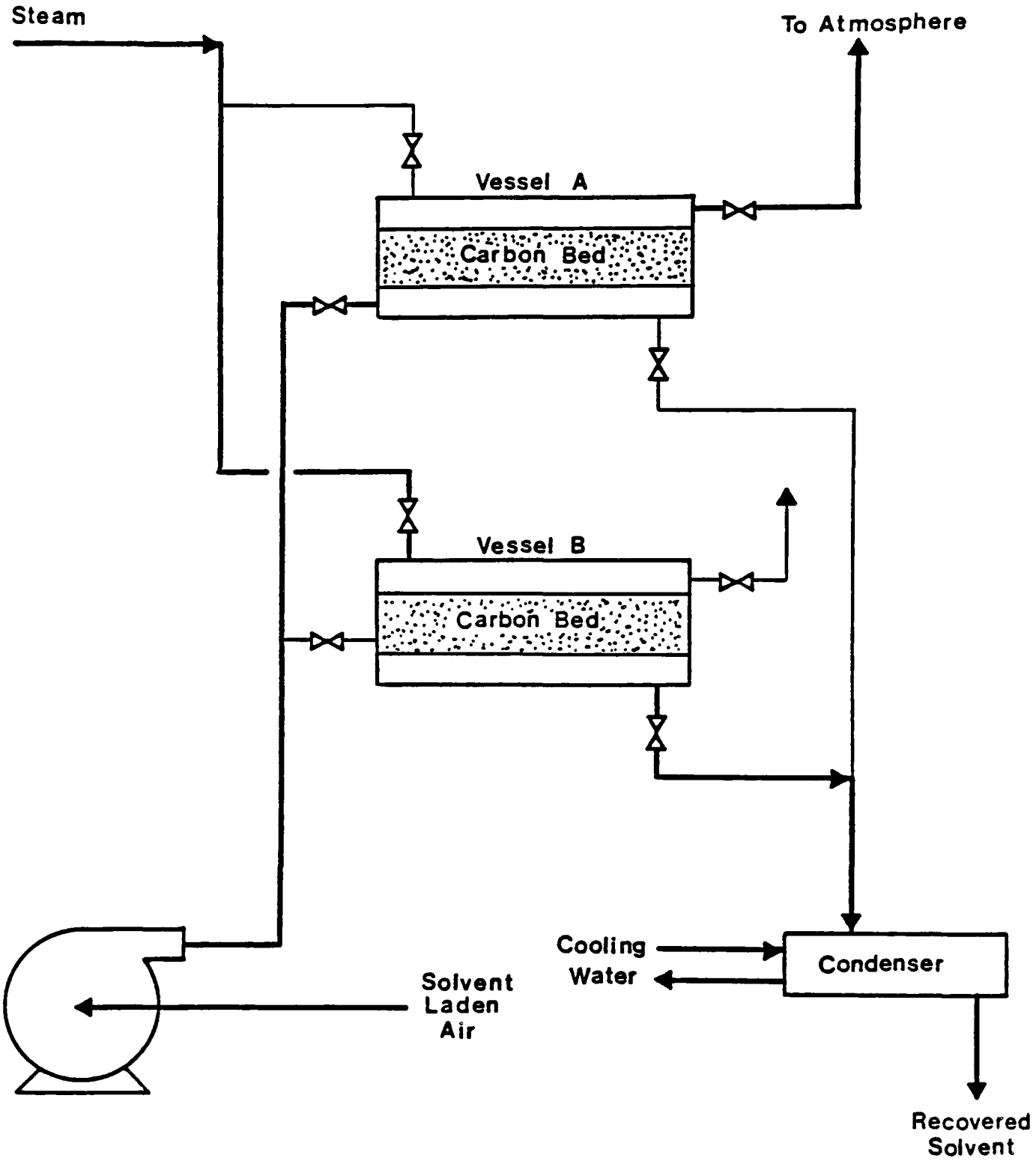

FIGURE 6-1. Typical Carbon Bed Adsorber

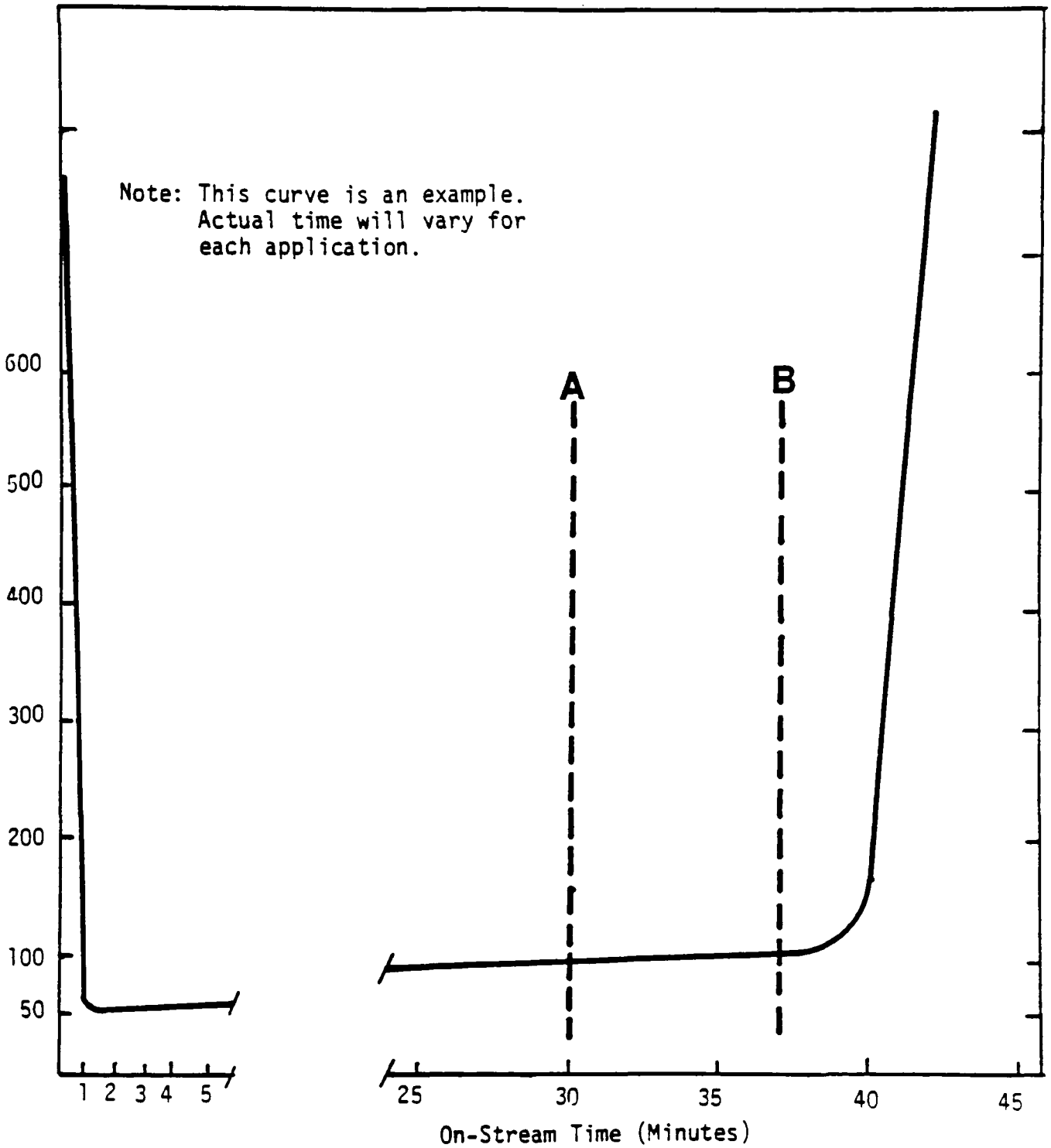

FIGURE 6-2. Discharge Concentration vs. Time for a Non-Cooled Carbon-Bed Adsorption System

This desorbing medium must be such that the carbon is heated to a temperature higher than that at which the organic vapors were adsorbed. Saturated steam at low pressures is the most common desorbing medium. The steam is usually passed through the carbon bed in a direction opposite to the flow of gases during adsorption.

The steam along with the desorbed solvents are passed to a condenser and then are decanted to separate the water and the recovered solvent. The regeneration process leaves the carbon hot and saturated with water. Sometimes (and in newer systems), before the carbon bed is placed back on stream, cooling of the carbon is performed. Atmospheric air blown through the bed is most commonly used to remove the heat from the carbon.

Regeneration/adsorption cycles are controlled either manually or automatically. With automatic control, cycles are either executed for a set time or vary depending on the continuous measurement of effluent concentration (called "breakthrough control"). Breakthrough control utilizes monitoring of the effluent concentration to identify the point where a bed is just approaching breakthrough, at which time the vapor laden inlet gas stream is switched to a regenerated bed.

6.2 INSPECTION PROCEDURES

Excessive emissions from carbon bed adsorption systems usually result from the typical failure modes of the carbon beds and their ancillary equipment. These failure modes are as follows:

- Steam valves leak;
- Air discharge valves leak;
- Insufficient steam flow during regeneration;
- Insufficient time for steamout;
- Poor steam distribution;
- Condensation system failure;
- Collapse of carbon bed;
- Loss of carbon activity;
- Bed blockage or channeling due to buildup of lint, dust, polymers, or other materials;
- Uneven bed distribution; and
- Improper setting of system controls.

Unfortunately, it is impossible to detect many of these failure modes by physical inspection and many of the inspection procedures involved are unduly hazardous for the inspector. This section presents several inspection techniques that are presently available and which can be readily utilized by maintenance and regulatory agency personnel in determining the effectiveness of operating carbon adsorption systems.

Discharge gas monitoring can demonstrate that breakthrough does, or does not occur.[1] Although not an exact test, it is probable that a system which goes through several cycles of full-load operation without reaching breakthrough, is operating at adequate adsorption efficiencies. Determination of the presence of absence of breakthrough requires that solvent concentrations in the 0-500 ppm range be continuously measured. Several types of instruments are presently available for measuring solvents at these low levels. Among these are:

- Flame ionization systems;
- Ultra-violet ionization systems; and
- Diffusion sensors.

These systems each have some advantages and disadvantages. They require calibration for the solvent being measured if exact measurements are required, but can also be used without calibration to indicate relative concentration levels. If the output of a suitable detector is connected to a recorder, the adsorber discharge concentration can be monitored over several cycles to determine if a breakthrough occurs. For a facility operating at normal production rates, the absence of breakthrough may be taken as evidence that the adsorption system is operating satisfactorily. For successful testing an inspector must become familiar with the use of the instrumentation, safety considerations in its use, and its application to carbon adsorption systems.

An overall system material balance, taken over a reasonable time period, is one of the best techniques for determining overall system efficiency.[1] To utilize a material balance the plant must maintain accurate records of solvent-containing materials entering the process, and of the recovered solvent. Recovered solvent returned to the process is considered as part of the solvent entering the system. The solvent concentration of all materials entering the process must be known. A form for a material balance is presented in Figure 6-3.

CARBON BED ADSORPTION SYSTEM MATERIAL BALANCE

Inventory Period: From _____ to _____.

INPUT

(a) Solvent containing materials:
# of materials x (# solvent/# material) = # solvent.
1.
2.
3.
4.
5.
6. Total solvent in raw materials (in #) _____
(=1 + 2 + 3 + 4 + 5) _____

(b) Purchased solvent
7.
8.
9.
10.
11. Total purchased solvent (in #)
(=7 + 8 + 9 + 10)

RECOVERED SOLVENT

12. Total solvent from recovery system _____
13. Solvent sold _____
14. Recycled solvent (=12-13) _____

% OVERALL EFFICIENCY

$$100 \times \frac{(12)}{(6) + (11) + (14)} = \quad \%$$

Note: If the solvent-recovery system returns more than one solvent stream, a separate sheet should be prepared for each solvent stream. Overall efficiency is the average of the efficiencies for each stream.

FIGURE 6-3. Overall Material Balance For Facilities Using Solvent Recovery Systems

Most of the information can be assembled from shipping data, and from component data available from raw-material suppliers. The data needed to complete the material balance is the quantity of recovered solvent. This data is only available directly from the source through use of totalizing flow meters which measure solvent from the recovery systems. Since not all installations have these flow meters installed, the material balance procedure will not be applicable to every carbon bed installation.

A third efficiency evaluation procedure can be used for systems employing instruments (such as flowmeters) providing data which can be used to calculate steam to recovered solvent ratios.[2] If one assumes a constant solvent input into the system and constant length adsorption cycles, then if the ratio of solvent to steam decreases, it is indicative of a decrease in collection efficiency. This technique is readily used on systems recovering immiscible solvents and having flowmeters on both the solvent and water streams following the decanter. While it will alert maintenance/inspection personnel to a malfunction of some type in the carbon bed system it is, unfortunately, of little aid in diagnosing the problem.

Several types of visual inspections can also be used to help in evaluating carbon adsorption system.[3] The first visual check that can be made is to see if the proper bed is on the adsorption or desorption cycle according to the mode selection of the control panel.

If the system operates on timed cycles, then a check should be made to determine if the bed actually changes at the predetermined time (the cycle duration). At this time, the agency inspector may also inquire as to the rationale for the cycle duration. Sometimes operating conditions no longer coincide with design specifications and cycle times have not been adjusted accordingly to insure adequate system performance.

If the system utilizes breakthrough control, then the concentration setting of the organic analyzer being used to monitor the exhaust should be checked to see that it is within reasonable limits. If possible, the zero setting of the device (as described in the operating manual) should also be checked.

During regeneration, the steam pressure according to the gauge(s) should be compared to the design value to aid in determining if beds are being fully regenerated. Lastly, a quick visual inspection should be made for corrosion, especially in the piping between the carbon beds and the condensor and the condensor system itself.[a]

6.3 REFERENCES

1. Michaelis, Theodore B., "Techniques to Detect Failure in Carbon Adsorption Systems," report by Engineering-Science, EPA Contract No. 68-01-4146, July 1980.

2. Communication between Mr. Ted Michaelis, Engineering-Science and Ms. Robin Segall, Engineering-Science, 19 February, 1982.

3. Communication between Mr. Macon Shepard, Engineering-Science and Ms. Robin Segall, Engineering-Science, 19 February, 1982.

[a]Some organics form acids when regenerated with steam.

7.0 FLARES

Flares are used for the control of gaseous combustible emissions from stationary sources. They are most often employed to dispose of large quantities of gases during plant upsets. In these cases flows are usually intermittent with flow rates of several million cubic feet per hour during a major upset. Flares have also found use as a control device for continuous gas flows of the order of a few hundred cubic feet an hour. This is a relatively inexpensive method to control gaseous emissions, but unfortunately has the potential disadvantage of creating other emissions from the flare itself.

7.1 COMPONENTS AND OPERATION

There are three types of flares commonly in use today. These are the elevated flare, the ground flare, and the forced draft flare. The choice of flare type depends on the specific characteristics of the gas flow to be disposed of and the primary aim in flaring the gas. Elevated flares are used primarily in conjunction with vapor relief collection systems in large-scale chemical manufacturing or petroleum refining operations; expedient vapor disposal rather than pollution control is the design emphasis.

Ground flares, which include conventional flare burners discharging horizontally and the "low-level" flares, are useful for the disposal and control of routine discharges. The low level flares are generally less noisy, and emit much less thermal radiation and glare. They are also more efficient than elevated flares in the combustion of gaseous wastes and thus have lower air emissions. Ground flares used alone are not suitable for large gas flows, however, and so often, low level flares are used in conjunction with an elevated flare when the possibility of the sudden venting of substantial gas quantities exists.

Forced draft flares use a blower of some type to supply the air and turbulence necessary for the efficient and smokeless burning of vented gases. Unlike other efficient flares, they do not require the use of steam, water, or an auxiliary gas for smokeless flaring. Forced draft flares are advantageous in their low operating cost and reliability, but are relatively expensive to install and can only handle a relatively narrow range of waste gas flow rates.

7.1.1 Elevated Flares

The modern elevated flare system is made up of several components including the flare tip, some type of gas trap directly below the tip, a pilot and ignition system at the top of the flare tip, and the stack and its support. When smokeless burning is required, a steam injection system must also be provided at the top of the flare. Water seals to prevent the spread of fire and knockout drums are also usually required for safety reasons. Figure 7-1 shows a schematic of a typical elevated flare system.

The flare tip where waste gas combustion occurs must have excellent flame holding ability and mixing characteristics to enable it to operate over a wide range of turndown ratios. This is ensured using multiple continuous pilots around the combustion tip and by providing a flame stabilization ring on the tip (see Figure 7-2).

Smokeless burning for elevated flares is achieved using special flare tips which inject water, natural gas or steam into the flame thereby increasing air-gas mixing and ensuring complete combustion. Water injection has many disadvantages and natural gas injection is cost effective only in cases where the gas has no value, so steam is most commonly used to achieve smokeless burning.

There are two basic steam injection techniques used in elevated flares. In one method steam is injected from nozzles on an external ring around the top of the tip (Figure 7-2). In the second method the steam is injected by a single nozzle located concentrically within the burner tip.

In recent years regulations have required flares to be smokeless for large turndown ratios. To ensure satisfactory operation under varied flow conditions, these two types of steam injection have been combined into one tip. The internal nozzle provides steam at low gas flow rates and the

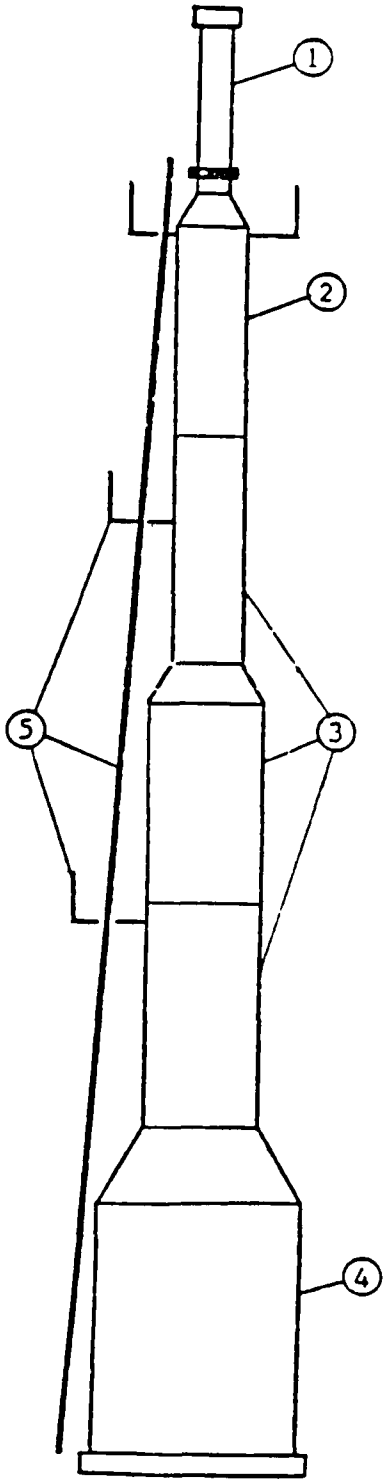

1. Flare Burner and Location of Fluidic Seal
2. Gas Trap
3. Riser Sections
4. Entry, Disentrainment or Water Seal
5. Ladders and Platforms

FIGURE 7-1. Integrated Flare Stack Components[1]

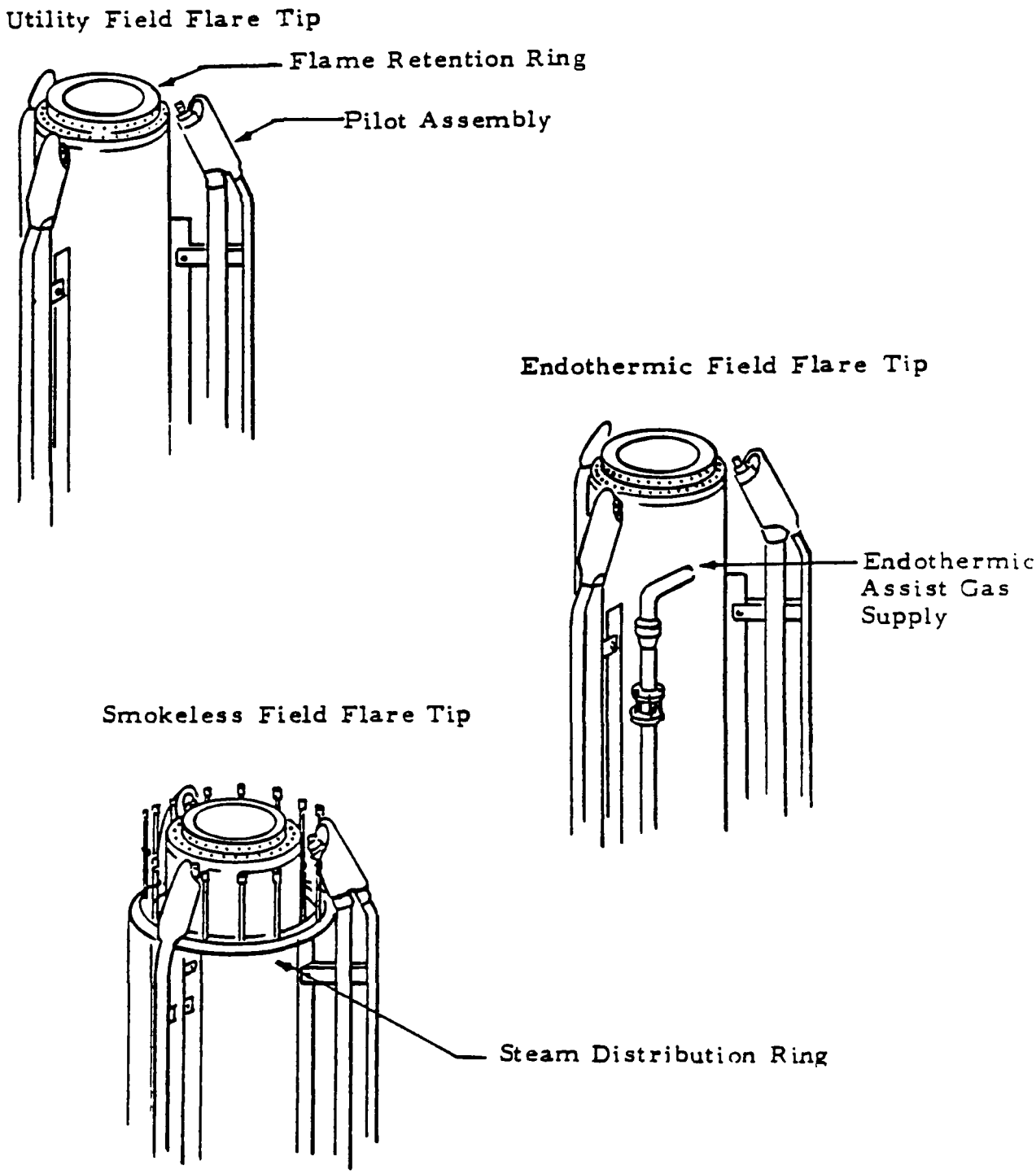

FIGURE 7-2. Flare Tips from John Zink Company[1]

external jets are available at high flow rates. Several other special purpose tips are currently in use including ones that inject steam and air and ones that inject gas to raise the heat value of the waste gas stream.

The rate of steam injection to the flare tip is controlled manually or automatically. While automatic control is usually not mandatory, it is preferred because it reduces steam usage, greatly reduces the amount of smoking and minimizes noise. Automatic systems use flow measurement devices with ratio control on steam. Since the flow rate measurement cannot include the variables of degree of saturation and molecular weight, the ratio controls are usually set for some average hydrocarbon composition. It is usually necessary to have a fixed quantity of steam flowing at all times to cool the distribution nozzles at the tip.

To prevent air migration into the flare stack as a result of wind effects or density difference between air and flare gas, a continuous purge gas flow through the flare system is maintained. The system can be purged with natural gas, processed gas, inert gas, or nitrogen. To reduce the amount of purge gas required and to keep air out of a flare system, gas trap devices are also used and are normally located in the stack directly under the flare tip. One type of gas trap commercially available is the molecular seal (Figure 7-3). This type trap may not prevent air from getting in the stack as a result of gas cooling in the flare headers. Instrumentation systems are available to automatically increase the purge rate to prevent air from entering the stack during rapid gas cooling. Another type of gas trap is the Fluidic Seal which utilizes baffles to create a velocity gradient between the waste gas and the ambient air to prevent air migration into the flare stack. This seal weighs much less than a molecular seal and can be placed much closer to the flare tip.

The pilot burners ignite the outflowing gases and keep them lit. Usually three or four pilot burners are used. A separate system must be provided for pilot burner ignition to prevent flare failure. The usual method is to ignite a gas/air mixture in an ignition chamber by a spark. The flame front travels through an igniter tube to the pilot burner at the top of the flare. This system permits the igniter to be set up at a safe distance from the flare, up to 100 feet, and still ignite the pilots satisfactorily. The whole device is mounted on an ignition panel and set up in an accessible spot on the ground. The ignition panel must be explosion proof, have an

unlimited life, and be insensitive to all weather conditions. On elevated flares, the pilot flame is usually not visible and an alarm system to indicate pilot flame failure is desirable. This is usually done by a thermocouple in the pilot burner flame. In the event of flame failure, the temperature drops and an alarm sounds.

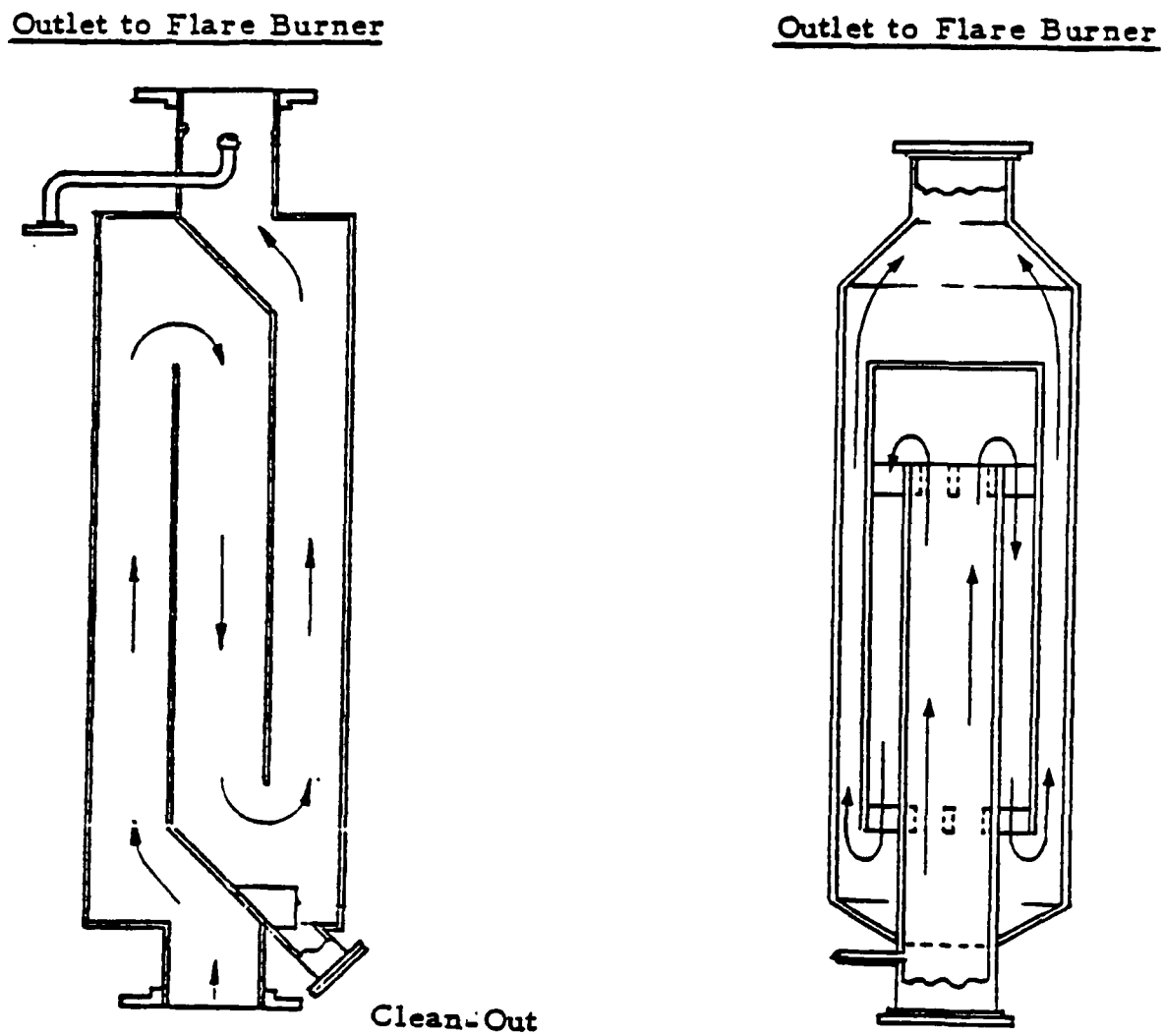

Inlet from Flare Riser

National Air Oil NDS Double Seal
(Patent applied for)

Inlet from Flare Riser

John Zink Molecular Seal
(U.S. 3,055,417)

FIGURE 7-3. Air Reentry Seals[1]

Water seals and flame arrestors are used to prevent a flame front from entering the flare system. Knockout drums are located at or near the base of elevated flares to separate liquids from the gases being burned.

7.1.2 Ground Flares

A ground flare consists of a burner and auxiliaries, such as, a seal, pilot burner and igniter. Two types are found; one type consists of conventional burners discharging horizontally with no enclosures. These flares must be installed in a large open area for safe operation and fire protection. If the ignition system fails they are not as capable in dispersing the gases as an elevated flare. For these reasons this type of ground flare has found only limited applications.

Ground flares may also consist of multiple burners enclosed within a refractory shell as in the recently developed "low level" flares (Figure 7-4). The essential purpose of a low level flare is complete concealment of the flare flame as well as smokeless burning at a low noise level. The flared gases are connected by a manifold to a series of burner heads which discharge the gas into a refractory enclosure. Mixing of the gas and air is accomplished by a series of multi-jet nozzles. Combustion is obtained with little or no steam because of the turbulence and temperature of the burning zone due to the natural draft and the enclosure. This type of ground flare can be designed to handle most plant flare occurrences and then the remaining large releases can be diverted to an elevated flare. Figure 7-5 is a schematic showing how such a system works. This type of integrated flare system is becoming quite common, especially in populated areas.

7.1.3 Forced Draft Flares

The forced draft flare uses air provided by a blower to supply primary air and turbulence necessary to provide smokeless burning of relief gases without the use of steam. Figure 7-6 shows two common designs of forced draft flares. This type of flare combines smokeless burning with low operating cost and reliability because only pilot gas and electricity are required. The flame is also stiffer and, because of the forced draft, is less affected by the wind. A blower flare should have an automatic air turndown device to prevent excess air from quenching the flame and creating smoke if the flare gas rate is reduced. Variable speed blowers or

baffles coupled to flow sensing devices have been used on these flares to extend their turn-down ratio. These flares are used mainly to provide smokeless burning where steam is not available.

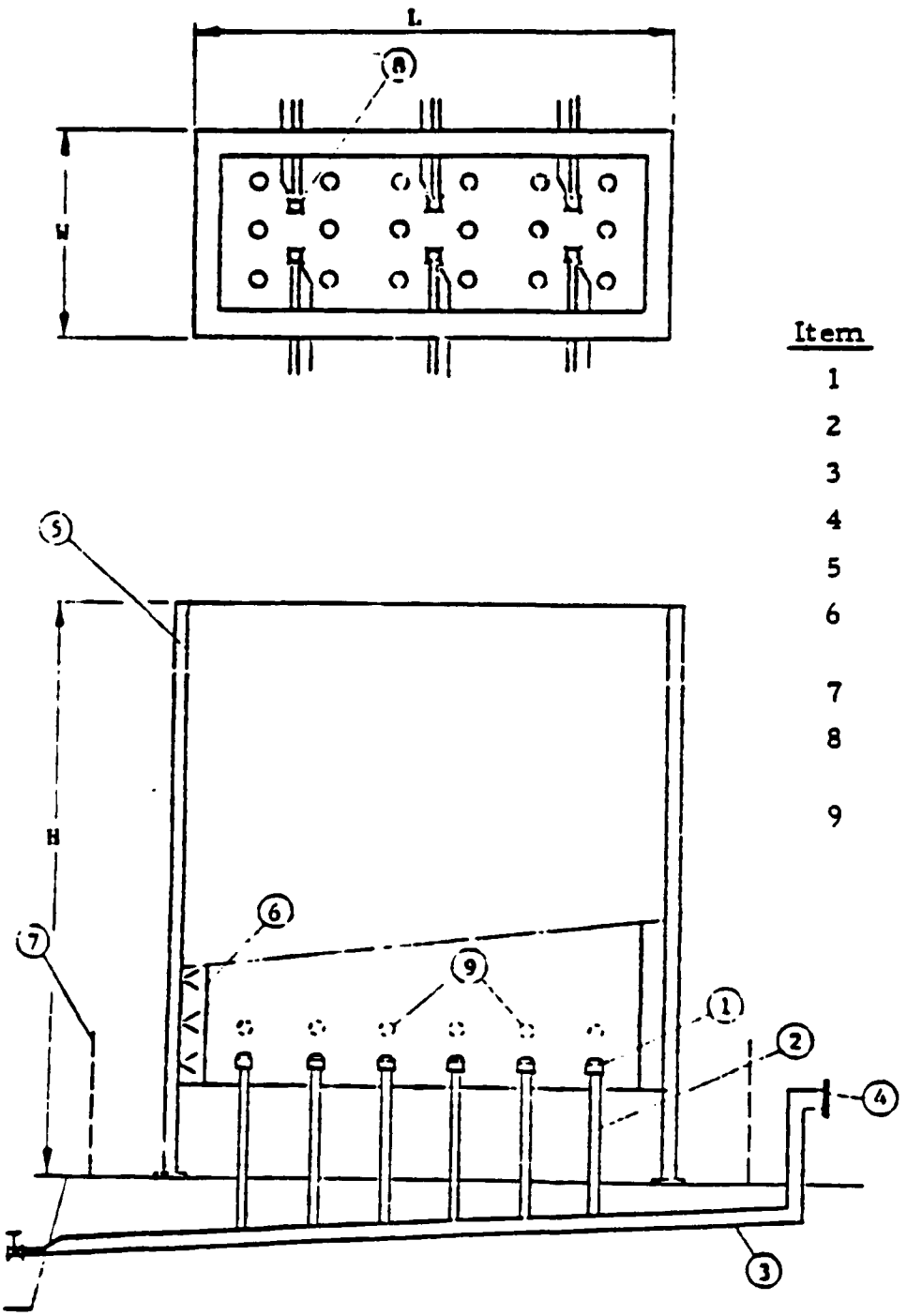

Item	Description
1	Patented Jet Mix Tips
2	Flare Gas Risers
3	Flare Gas Header(s)
4	Flare Gas Connection(s)
5	Combustion Chamber
6	Refractory Lining and Anchors
7	Safety Fence (Collapsible)
8	NSFP (Pilots with Igniter Tubes
9	Sight Ports

FIGURE 7-4. Ground Flare (from National AirOil Burner Company)[1]

7.2 INSPECTION PROCEDURES

The initial and by far the most informative procedure in a flare inspection is the visible emissions observation. The presence or absence of visible smoke is a primary indication of the flare's combustion efficiency. Almost all flares in use at the present time will be of smokeless design and therefore should have essentially no visible emissions.

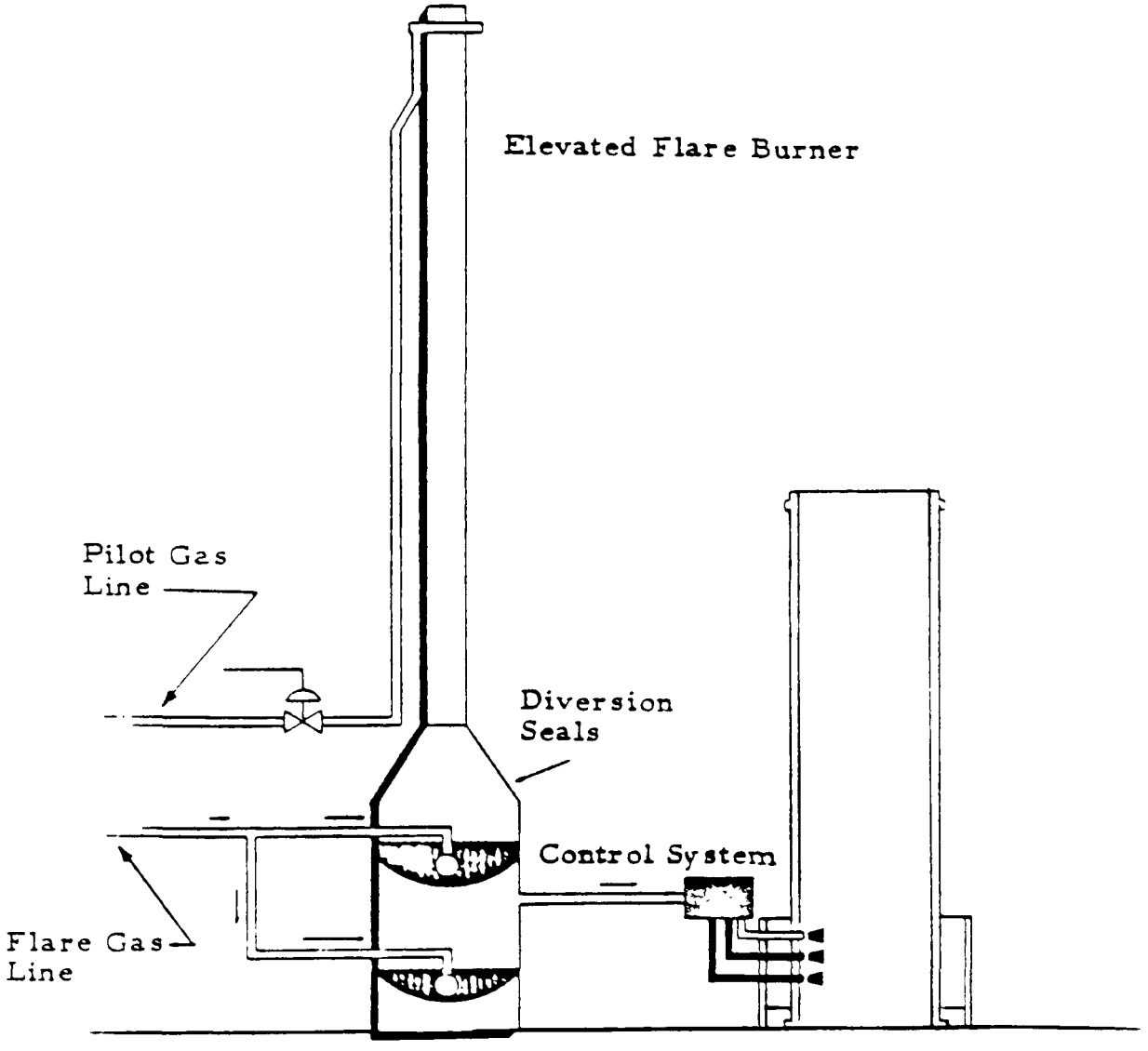

FIGURE 7-5. Ground Flare and Elevated Flare Connected by a Double Stage Water Seal[1]

If smoke is visible, this is usually an indication of some sort of malfunction. An exception occurs in cases where the flare is burning waste gases from a major plant upset and the gas flowrate has exceeded the practical limit of smokeless burning for that particular flare. The most critical determinant of smoke production is the amount and distribution of oxygen in the combustion zone. Therefore a smoking flare might be caused by:

1. Lack of sufficient steam injection (to provide turbulence and oxygenated compounds) at the combustion zone,
2. Lack of sufficient water injection at the combustion zone, or
3. Lack of sufficient air from blowers in forced draft systems.

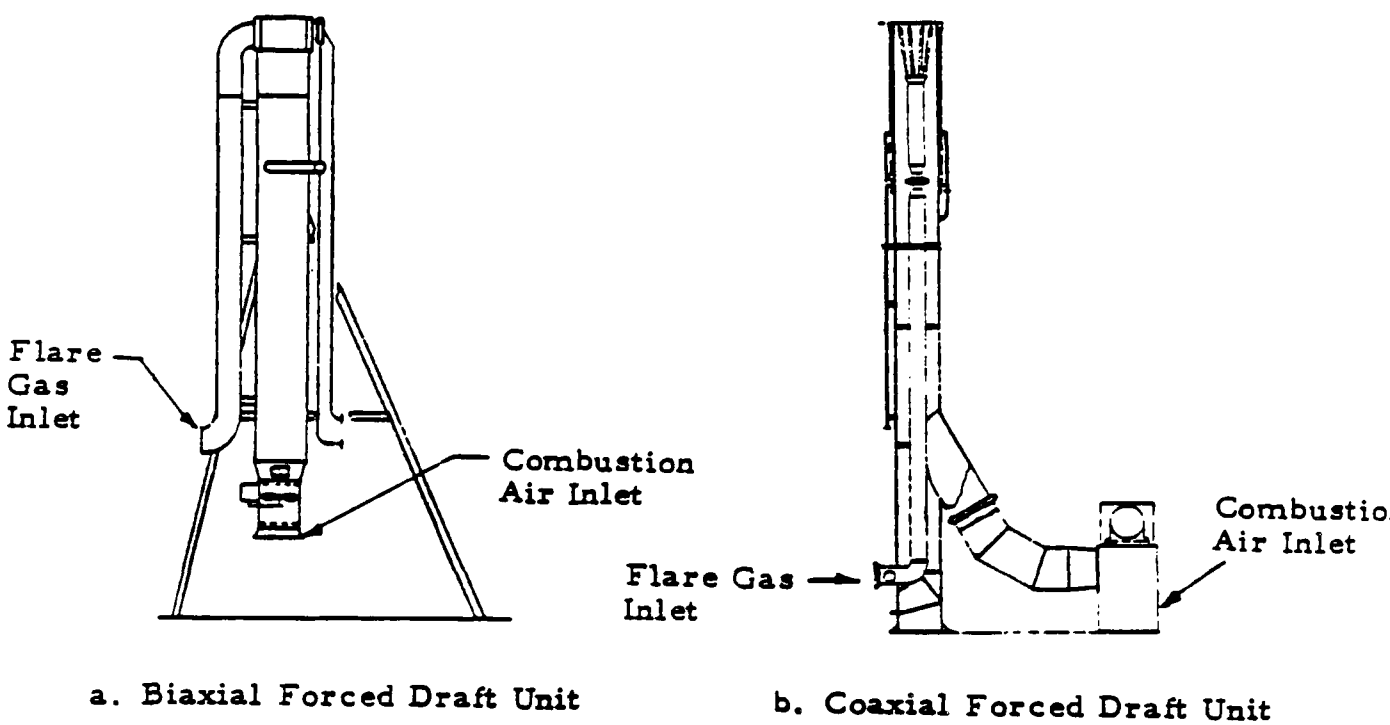

FIGURE 7-6. Two Designs for Forced Draft Flare Systems[1]

Comparison of the values from steam or water pressure gauges (if available) with manufacturer's design values may provide an indication of whether sufficient pressure is available for smokeless combustion.

Unfortunately, flares do not otherwise readily lend themselves to reggulatory and routine maintenance inspections. Some further cursory inspection procedures include being aware of malodorous compounds in the flare's vicinity and examining the ducts and pipes carrying the various gases, air and steam for obvious leaks and signs of deterioration.

A potential future inspection procedure for flares is the remote sensing of the components in the gas stream exiting the flare. This method may provide a means of determining the combustion efficiency of flares and the actual quantities of pollutants emitted to the atmosphere. For an example of the application of remote sensing on flare emissions, the report by W. F. Herget et al entitled "Development of Flare Emission Measurement Methodology" is recommended.

7.3 REFERENCES

1. Klett, M. G. and J. B. Galeski, "Flare Systems Study," report by Lockheed Missiles and Space Co., Inc. for U.S. EPA Research Triangle Park, NC, Publication No. EPA-600/2-76-076, March 1976.

2. Communication between Mr. Glenn Draper, Engineering-Science and Ms. Robin Segall, Engineering-Science, 18 February 1982.

8.0 AUXILIARY EQUIPMENT

There are three main types of equipment auxiliary to air pollution control devices. They are the (1) ventilation system which includes the hoods and ductwork leading to the air pollution control device, (2) the fans or blowers associated with the control device, and (3) the continuous monitors, if any, installed after the control device to monitor the effluent. This chapter discusses the counterflow inspection procedures for these types of equipment.

8.1 VENTILATION SYSTEM

The ventilation system is simply the hood and ductwork leading to the air pollution control device. Since there are no moving parts it is often erroneously assumed that nothing can go wrong. Actually the ductwork is prone to serious air inleakage due to erosion and corrosion. Also, under certain circumstances solids can build up, thereby restricting gas flow.

Evaluation of the ventilation system is done by observing the physical condition and by measuring static pressure and gas temperature profiles. For combustion sources an oxygen profile is very useful. These profiles are acquired by measuring the various parameters at three or more points along the ductwork. The measuring points could be simple 1/4" O.D. static pressure taps or 1" to 2" ports equipped with threaded caps. They do not have to be equally spaced.

The measurement results are plotted on a graph as a function of the equivalent linear distance from the control device. As shown in Figure 8-1, the static pressure (on systems with the fan after the control device) should become progressively less negative as one moves away from the control device toward the process. The slope of the line will be basically linear if the equivalent lengths of elbows and duct expansions are used (calculation of

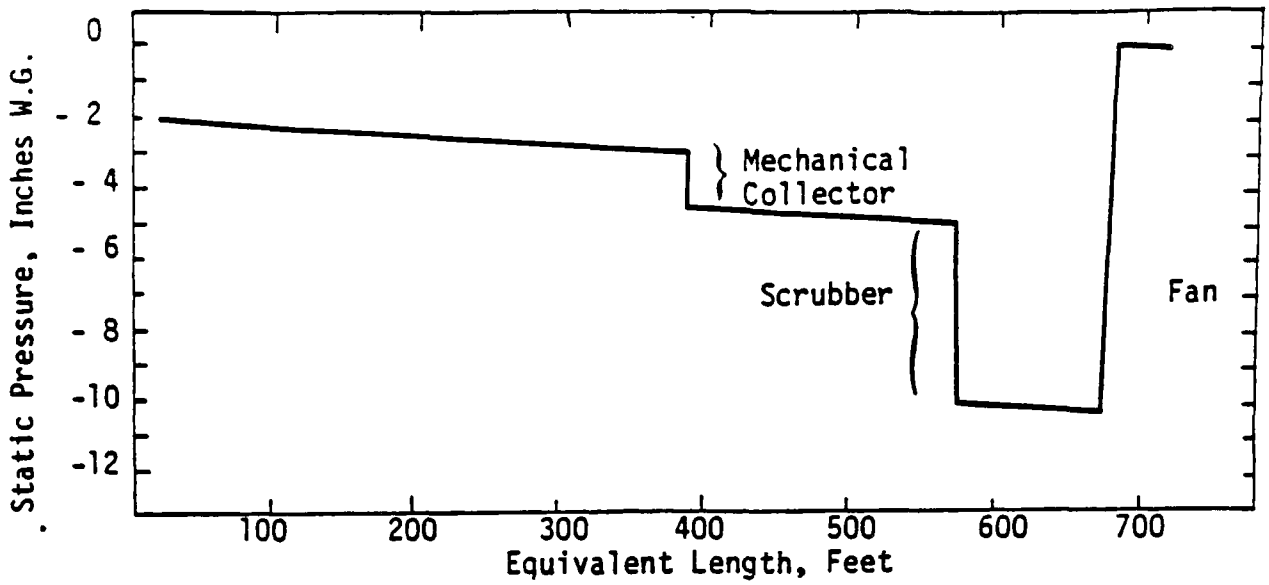

FIGURE 8-1. Example Static Pressure Profile (System Having a Mechanical Collecter and Wet Scrubber)

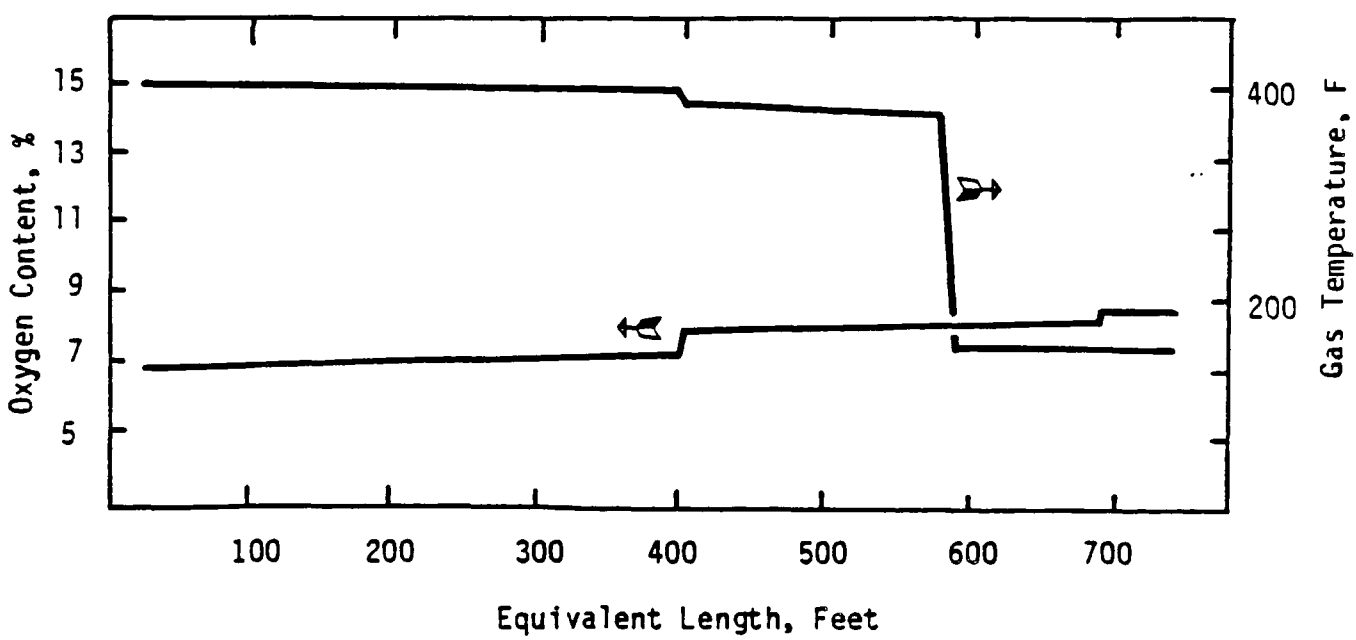

FIGURE 8-2. Example Oxygen and Temperature Profiles

equivalent lengths is discussed in Reference 1). A sharp change in the static pressure profile slope suggests either partial blockage of the duct or a large air infiltration point due to a hole, weld failure, or an open clean out trap door. Air infiltration should be apparent also on the gas temperature profile. This should increase directly proportional to the distance away from the collector (see Figure 8-2). A discontinuity in the line[a] indicates the general location of an air inleakage. The flue gas oxygen content should not change substantially; however, most systems have some degree of air infiltration which leads to a gradually increasing O_2 level as one moves away from the process (Figure 8-2). A sharp increase in the flue gas oxygen content is indicative of air inleakage.

One common cause of air inleakage is holes caused by erosion. Particulate matter laden gas streams moving at high velocities (3500 to 5000 feet per minute) can be quite abrasive. Abrasion normally occurs at elbows and anywhere the gas stream shifts direction sharply.

Uninsulated ducts are susceptible to corrosion, especially if the gas stream has a high concentration of acid vapors. Moisture on the relatively cool inner surface of the ducts absorbs the acidic compounds and promotes corrosion. As air infiltration increases, the overall gas stream is cooled by the ambient air, thus accelerating corrosion.

Hoods should be inspected to see if they have been damaged by overhead cranes or other moving equipment. It is also common to find that operating personnel have moved the hood to gain better access to the process equipment or have adjusted dampers controlling the gas flow. The inspector must determine whether the present hood configuration provides adequate emission capture. A velometer or small pitot tube may be used in measuring the gas velocities around small hoods, while for large hoods visual observation may be the only method available to evaluate captive effectiveness. In some cases it is possible to evaluate hoods using static pressure readings one to three duct diameters downstream from the hood. This static pressure is related to the gas flow rate as shown in Equation 8-1.

[a]Negative pressure systems only.

$$S_{p_h} = (1.0 + F_h)V_p \qquad \text{Eq. 8-1}$$

where

S_{p_h} = hood static pressure,

F_h = hood entry loss factor.

V_p = velocity pressure.

The hood entry loss factor is constant for a given hood configuration (see reference 1 for typical values). The velocity pressure calculated in this manner can be used to estimate gas flow. Use of this approach enables inspection/maintenance personnel to "baseline" a hood. This method, however, only indicates the overall gas flow rate; it does not conclusively show that the contaminants are being effectively captured. The latter is achieved only when the overall gas flow rate and hood location are proper.

8.2 FAN EVALUATION

Inspection of the fan requires only a modest investment of time and provides very valuable diagnostic information which can be used later to narrow the scope of the inspection. The procedure described in this section is useful for evaluation of relatively small direct- and belt drive fans with rated gas flow rates of less than 50,000 acfm. Larger, more complex systems may be evaluated using information available in standard texts such as Fan Engineering, (Buffalo Force, Co, 1980). The Counterflow Inspection Procedure utilizes the data listed in Table 8-1.

TABLE 8-1. FAN INSPECTION

1. Physical condition of fan housing
   - a. Vibration
   - b. Corrosion
   - c. Vibration/expansion sleeve integrity
   - d. Damper position
   - e. Hatch access
2. Fan operating conditions
   - a. RPM
   - b. Gas temperature
   - c. Sheaves ratio
   - d. Slippage squeal
   - e. Fan motor current

8.2.1 Physical Condition of Fan Housing

The first item to be checked is fan vibration, and this is done simply by observing the fan. The purpose of this initial check is primarily to indicate whether the inspection can continue. In certain very unusual circumstances, the vibration may be so severe that fan disintegration is imminent. Such an event is life threatening, and accordingly the inspection should be halted immediately and plant management should be advised of the fan conditions.

Most small fans have flexible sleeves on the inlet and outlet ducts. These serve to reduce the transmission of normal fan vibration to the ductwork and also provide for thermal expansion. Cracks and tears in these sleeves are quite common. If these occur on the inlet side, cold ambient air is drawn in reducing the quantity of gas pulled through the process hoods and air pollution control systems. This may result in increased fugitive emissions at the process and increased fan energy use. If the fan happens to be located before the control device, then both the inlet and outlet sleeves are important.

Corrosion on the exterior of the housing may be indicative of gas temperatures below the acid vapor and/or water vapor dewpoints. If this problem does exist, the ductwork leading to the fan from the control device will also suffer from corrosion, perhaps to the extent of significant air inleakage. The latter is easily identified by a lower than expected gas temperature coupled with higher than normal flue gas oxygen contents (combustion sources only). Most oxygen analyzers are relatively easy to use and are reasonably accurate ($\pm$ 1 percent O_2).

On a routine basis, plant personnel should inspect the fan wheel for erosion, corrosion, and material accumulation. It is often possible to confirm that this is being done by examining the hatch or the fan housing.

8.2.2 Fan Operating Conditions

The most important fan operating parameter is the rotational speed measured in revolutions per minute (rpm). The gas flow rate through a given system is directly proportional to the rpm. A rough estimate of the rpm for belt-driven fans can be obtained simply by multiplying the fan motor rpm by

the ratio of the fan and motor sheaves as indicated in Equation 8-2[a].

$$\text{Fan rpm} = (\text{motor rpm}) \frac{\text{motor sheave diameter}}{\text{fan sheave diameter}} \qquad \text{Eq. 8-2}$$

Obviously, the measurement of sheaves is subject to some error since it must be done by looking through a belt guard. (Caution: the belt guard should not be removed to obtain a more accurate measurement). Belt slippage can also lead to a rotational speed several hundred rpm lower than estimated. This slippage is usually detectable by an audible squealing and in extreme cases, poor belt tension.

A more accurate measurement of rpm can be done by use of either a manual tachometer, a phototachometer, or a strobe type tachometer. Use of a manual tachometer is very straightforward assuming that there is a convenient access port to the fan shaft. Often the configuration of the belt guard precludes use of the manual tachometer. In such cases a phototachometer may be of use. This device senses and counts pulses of reflected light. The most accurate readings are obtained when a piece of reflective tape (usually supplied by the instrument manufacturer) is fixed on the fan shaft. It is possible to read integer multiples of the rpm if there is more than one reflective site within the field of view of the sensor. The rough estimate derived by the sheave ratio is generally useful in confirming that the lowest reading is in fact the actual rotational speed.

Fan rpm on simple fans cannot increase unless the source personnel either replace the motor or the sheaves. Since an increase in rpm normally results in a greater gas flowrate, the performance of certain types of collectors, electrostatic precipitators and fabric filters may be adversely affected. If the tip speed has exceeded permissible limits (specified by the manufacturers) fan disintegration may result.

For most fans used with air pollution control systems the total horsepower required (termed the "brake horsepower") increases as the gas flow rate increases. This is illustrated in Figure 8-3 which is a typical set of curves for a radial blade fan. As the operating point in Figure 8-3 shifts to the right it is apparent that there is a non-linear increase in the brake horsepower.

[a]The rpm of direct-drive fans does not vary.

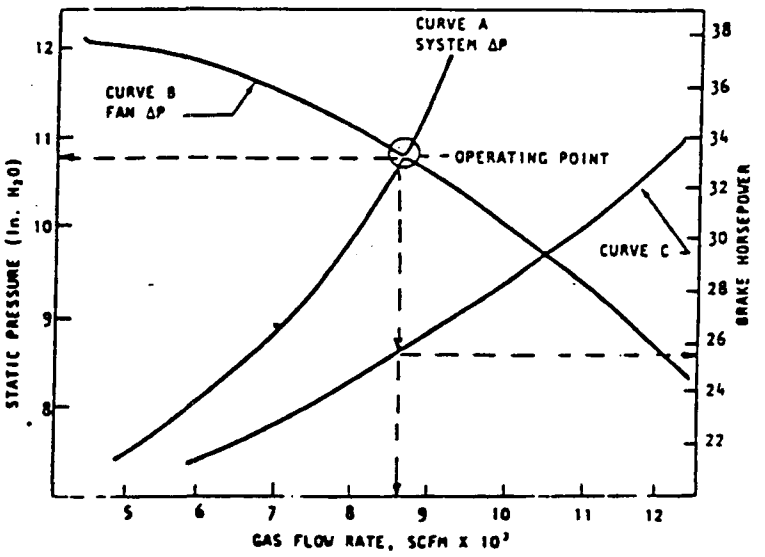

FIGURE 8-3. Fan Curves and System Characteristic Curve

If the brake horsepower could be accurately calculated based on simple measurements of fan operating conditions, it would be possible to make a reasonable estimate of the gas flow rate through the system. Unfortunately, this is usually not possible since the brake horsepower is dependent on the power factor which is neither easy to measure nor constant. The relationship between brake horsepower and motor operating parameters is presented in Equation 8-3.

Fan brake horsepower = current x voltage x power factor x 0.746 Eq. 8-3
(amps) (volts)

Due to the direct relationship between motor current and the brake horsepower and the basic nature of the fan curves (see Figure 8-3), it is possible to identify significant changes in gas flow rate using only the fan motor current which is relatively easy to measure using an inductance ammeter. Normally, an electrical cabinet must be opened to reach wire not covered by conduit piping. If the motor is a three phase type, the current in all three wires should be measured and the average current computed. (CAUTION: INSPECTORS SHOULD NEVER OPEN ELECTRICAL CABINETS DUE TO POTENTIAL SHOCK HAZARDS. THE PLANT ELECTRICIAN SHOULD MAKE ALL SUCH MEASUREMENTS.) The motor horsepower is normally used in fan performance evaluation.

Since the brake horsepower is also a function of gas temperature, the measured motor current must be corrected back to standard conditions before comparison with the baseline motor current. This conversion may be done using Equation 8-4 with the data presented in Table 8-2.

Motor Current (@STP) = Motor Current (@Temp) x (Table 8-2 Value @Temp) Eq. 8-4

If the corrected motor current has shifted more than 20% from the baseline value, there has probably been a significant change in the gas flow rate through the air pollution control system. The actual prevailing gas flow rate can be measured using EPA Reference Method 2 procedures.

TABLE 8-2. FAN DATA, TEMPERATURE CORRECTION[a]

Temp °F	Factor	Temp °F	Factor
20	0.91	320	1.47
40	0.94	340	1.51
60	0.98	360	1.55
80	1.92	380	1.59
100	1.06	400	1.62
120	1.09	420	1.66
140	1.13	440	1.70
160	1.17	460	1.74
180	1.21	480	1.77
200	1.25	500	1.81
220	1.28	520	1.85
240	1.32	540	1.89
260	1.36	560	1.92
280	1.40	580	1.96
300	1.43	600	2.00

[a]From "Basic Energy/Environment Analysis", NAPA information series 67, by C. Heath, August 1978.

8.3 REFERENCES

1. American Conference of Governmental Industrial Hygienists, Industrial Ventilation, Sixteenth Edition, 1980.

2. McDermott, H. J., Handbook of Ventilation for Contaminant Control, Ann Arbor Science, 1976.

9.0 PROCESS EQUIPMENT

The purpose of the process inspection is to answer questions and to confirm conclusions reached in earlier steps. However, if the source is subject to special state/local regulations or to New Source Performance Standards or to National Emissions Standards for Hazardous Air Pollutants, compliance with recordkeeping and monitoring requirements should be checked first, using a DSSE-published series of documents which includes checklists and associated information on recordkeeping and monitoring requirements.

In the process inspection the inspector can seek answers to questions which arose earlier. He can address problems which could be individually or collectively responsible for nonoptimal performance. Questions he might ask include but but are not limited to:

1. Has the production rate increased (higher mass loading and/or gas flow rate)?

2. Have the raw materials and/or fuels changed to the extent that effluent characteristics are different?

3. Has the process equipment deteriorated to the extent that emissions are affected?

4. Have changes in operating conditions resulted in more difficult collection problems (e.g. particle size decreases)?

The process inspector should begin at the control centers where the process monitors are located, to look for signs of changes in operating conditions and to observe current operating/maintenance practices. At these centers, process operating data are available; a process flowsheet is generally posted on the control panel; plant operators are generally nearby; and the subdued noise level is conducive to technical discussions.

While in the control room, the inspector should seek out the process monitors and/or records most pertinent to the compliance questions. Example "inspection points" for six source types can be found in Table 9-1; several generalizations can be drawn from this table.

1. In most cases, the inspector can confirm increased production rate by using data available in the control room;

2. The inspector can confirm raw material changes by inspecting records kept either in the control room or in the administrative offices;

3. The inspector cannot easily confirm process operational changes;

4. For batch operations, it is necessary to observe the equipment since little useful information is available in the control room; and

5. For other processes, it is possible to identify changes in operating conditions, but the significance of the changes is hard to determine.

Follow-up questions remaining after the inspection of records and monitors in the control room can be quite time consuming due to the cyclic processes and to distances between inspection points at large plants. The follow-up can be guided by the items listed in Table 6, but the inspector is encouraged to develop more extensive lists for specific plants. The presence of fugitive emissions should be noted.

TABLE 9-1. EXAMPLE INSPECTION POINTS, COUNTERFLOW INSPECTION PROCEDURES

Type of Industry/Source	Inspection in the Office and/or Control Room	Inspection of Specific Equipment
1. Confirm the Rates of Production and/or Generation		
Sulfuric acid	Check acid production records, and observe acid flow rate indicator.	N/A
Asphalt	N/A	Observe number of batches shipped per hour of plant operation.
Utility or industrial boiler	Check megawatt generation and steam production rates.	N/A
Cement	Check raw material feed rate records.	N/A
Refinery	Check throughput records on catalytic cracker.	N/A
2. Confirm Raw Material Changes		
Asphalt	N/A	Perform lab tests to determine coal gradation and surface moisture percentage.
Utility or industrial boiler	Check daily records of analyses: % ash, %S, Btu content, ash fusion temp.	Take sample for later analyses.
Sulfuric acid	Check records of feed content; high levels contribute acid mist.	N/A
Refinery	Check production inventory records.	N/A

TABLE 9-1. EXAMPLE INSPECTION POINTS, COUNTERFLOW INSPECTION PROCEDURES (cont'd.)

Type of Industry/Source	Inspection in the Office and/or Control Room	Inspection of Specific Equipment
3. Confirm Process Operational Changes		
Sulfuric acid	Check catalyst bed temp and air flow rate to catalyst bed if SO_2 monitor values are high. Check acid concentration temp and flow to absorbers.	N/A
Secondary brass and bronze	Check records for percentage of zinc in alloy and for pouring temp.	Check for grease and oil on scrap and for operational practices such as maintenance integrity of slag load. Check hood caption velocity in furnace area. Determine if zinc is added before furnace temp is maximum.
Utility or industrial boiler	Check air preheater exit temperatures.	N/A
4. Confirm Process Equipment Deterioration		
Sulfuric acid	Observe SO_2 concentration monitors; check for inactive or poisoned catalyst if SO_2 is high.	Check pressure drop across mist eliminator. If low, check for shortcircuiting; if high, check for plugging.
Secondary brass and bronze	N/A	Check hoods and ductwork for physical damage and caption velocity.
Utility or industrial boiler	Check excess air level by means of O_2 readings.	Check to see if stoker boiler draft above fuel beds has >0.10" negative pressure.
Refinery	N/A	Observe flow rate.

10.0 VISIBLE EMISSION OBSERVATION

Plume opacity is evaluated in order to: (1) confirm compliance with applicable regulations, and (2) to diagnose performance of air pollution control equipment. This chapter does not deal directly with compliance determination, rather it emphasizes the diagnostic aspects of the visible emission observation. For those requiring detailed information on legal requirements pertaining to opacity observations, it can be found in references 1 and 2.

Plume opacity is the degree to which ambient light is absorbed and scattered while passing through the plume to the observer. The usefulness of the plume opacity concept is due to the fact that the extent of light attenuation due to absorption and scattering is often directly related to the particulate mass concentration in the plume gas stream; an increase in plume opacity normally indicates an increase in the effluent mass concentration. Opacity is an especially useful indicator for wet scrubbers and electrostatic precipitators since the particles which are collected the least efficiently are in the particle size range which attenuate light most effectively. As the performance of these control devices begins to degrade, the plume opacity increases significantly. Thus, opacity can be early symptom of developing particulate collection problems.

10.1 OBSERVATION PROCEDURES

Incorrect visible emission observation procedures can result in substantial errors. Accordingly, it is important to adhere to the procedures incorporated into the U.S. EPA Reference Method 9 (and most other similar regulations). The basic requirements are as follows:

1. Observations must be made by a qualified observer who has had formal training in proper procedures.

2. Readings should be made in the densest portion of the plume which is free of condensed water.

3. Readings must be made with the sun at the observer's back, within a quadrant of 140°.

4. To the extent possible, the observer should be approximately 90° (geometrically normal) to the plume travel.

The opacity observations should be made every 15 seconds for a total of at least six minutes. Longer time periods are often desirable in order to ensure representative operating conditions for the control device. If emission spikes or "puffs" are observed on an intermittant basis, the observation period should be long enough to characterize the frequency.

A complete description of the observation conditions should be made at the time of the observation (not written from memory at a later time). This should include the position of the observer, the type of background, weather conditions, and plume characteristics. One convenient form for opacity observations, developed by Eastern Technical Associates under contract to the U.S. EPA, is included in Appendix C.

The position of the observer should be characterized in sufficient detail to estimate the angle of observation. On sources with high stacks or with rectangular vents (such as roof monitors), it is possible to get an apparent opacity which is above the actual opacity due to the angle of observation. This is possible since the light coming to the observer is passing through a wider section of the plume as shown in Figure 10-1.

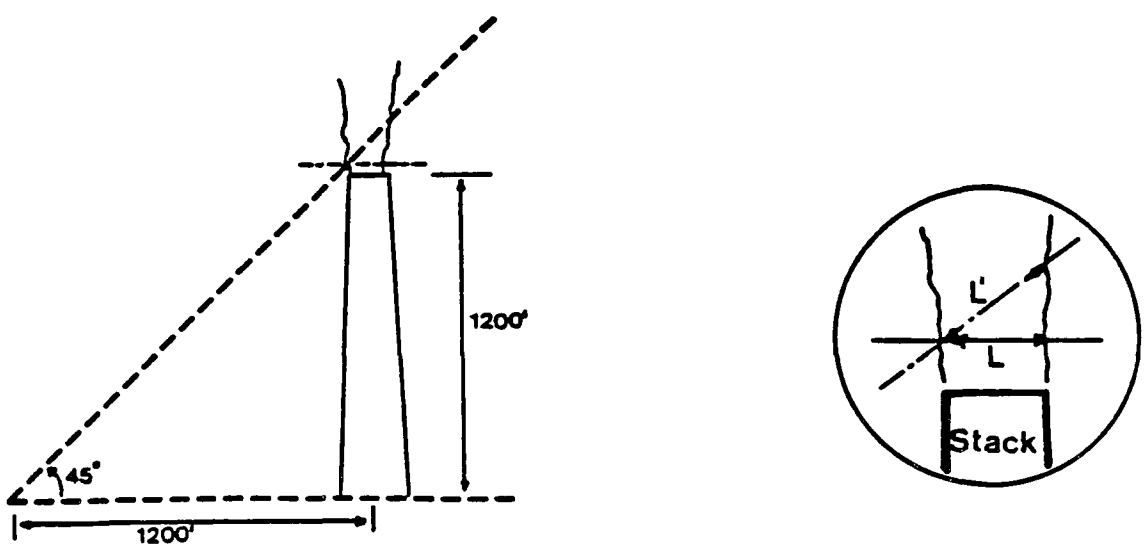

FIGURE 10-1. Extended viewing pathlength on an elevated source (Path L is actual diameter, Path L' is apparent diameter.)

The difference between the apparent opacity and the actual opacity for a 30 foot diameter stack is shown in Figure 10-2 for the observation angles of 30°, 45°, and 60°. It is obvious that the angle of observation can have a significant effect, especially if the opacity readings are made at various locations. In such a case the change in opacity levels from the baseline level may be due at least partially to a change in observer location. For this reason, diagnostic opacity readings should always be corrected back to an observation angle of 0.

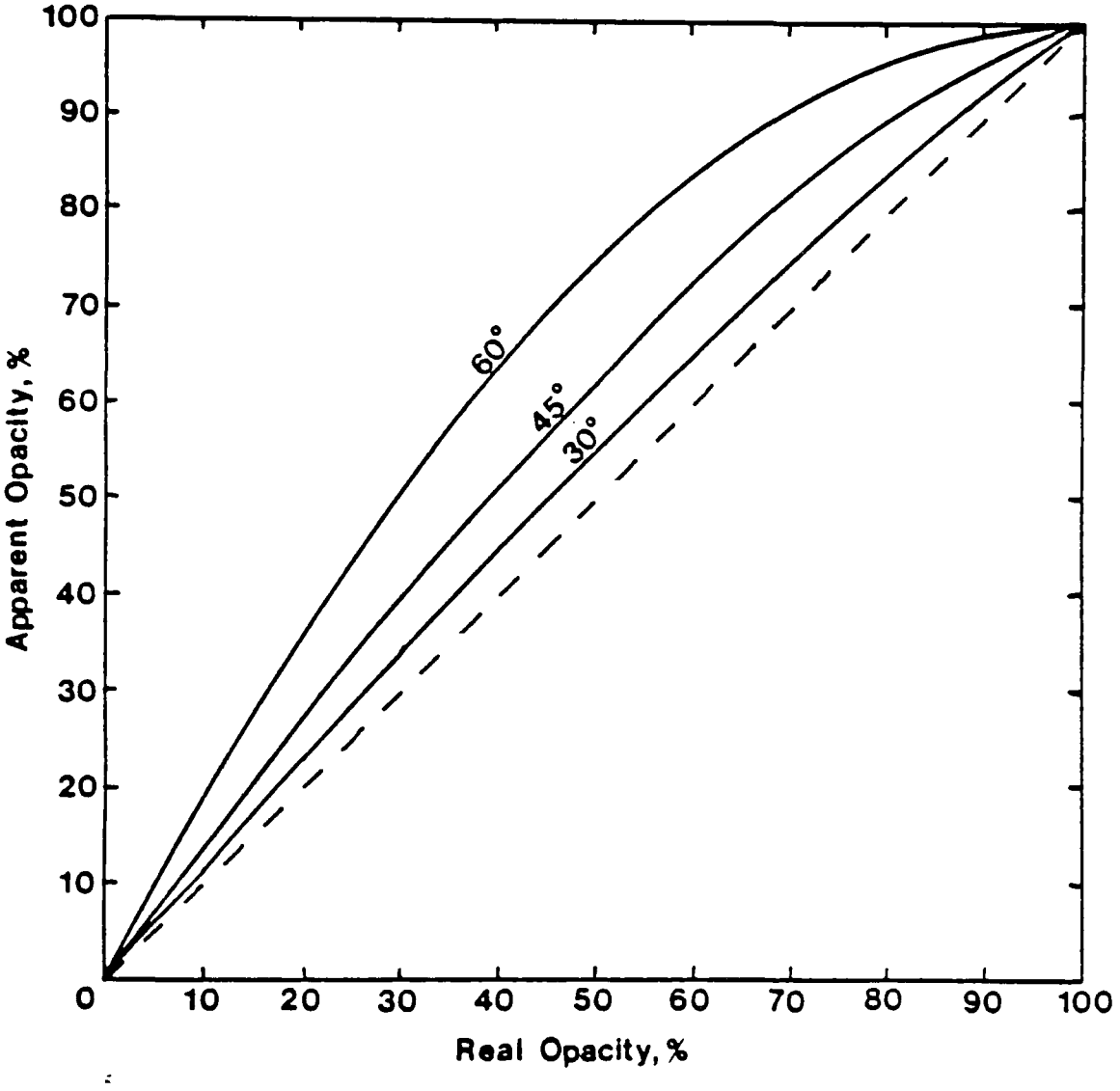

FIGURE 10-2. Effect of the Angle of Observation in the Observed Opacity for a Stack 30 feet in Diameter

The position of the source relative to other possible sources of particulate and/or steam should be recorded on the observation form. There should be no question that the observed opacity is for the source of interest only. Conditions which may have influenced the readings such as fugitive road dust and intermittant steam releases along the line of sight should be noted on the observation form. Obviously, these values should be ignored when analyzing the data to determine if opacity levels have shifted from the baseline levels.

Plume characteristics must be carefully documented. Certain effluent gas streams contain volatile compounds or reactive compounds. During the rapid cooling which occurs as the effluent leaves the stack, condensation of the materials can lead to substantial quantities of aerosol which did not exist as particles in the control device. Plumes composed primarily of such aerosols are termed "secondary plumes" or "detached plumes". The presence of a secondary plume usually does not imply control device operating problems. Secondary plumes often have very low opacity at the stack exit (between 0% and 10%) with very high opacities 1 to 5 stack diameters downwind. For this reason the plume appears to be "detached" from the stack. Secondary plumes do not revaporize like steam plumes.

The presence of condensed water in the plume usually can be easily recognized by the experienced observer. If such a "steam plume" exists, the readings should be made either before the water condenses or after it evaporates to leave a residual plume; the location chosen by the observer should be noted on the form. Reading in the region after evaporation is often the only option available; however, it has no diagnostic value since the observed path-length is never the same as that used in the baseline opacity observations.

Occasionally, there is some question as to whether the steam plume has actually dissipated and the observed plume is the residual aerosol not collected by the control device. This can be addressed by analyzing effluent gas stream and ambient meteorological conditions using a psychrometric chart as shown in Figure 5-2.[1] The initial point is based on the measured stack temperature and the average gas moisture content as estimated from previous stack tests. The final point is the ambient wet bulb and dry bulb temperatures. If the line connecting the two points does not cross the saturation curve, then a steam plume probably is not present. If the line crosses into

the saturation region and then reenters the unsaturated region at a temperature of 5° to 10° above actual dry bulb temperature, then plume dissipation probably occurs.

The presence or absence of steam formation within the plume can also be evaluated by comparing the dissipation of steam vent effluent at the plant, with the dissipation of the plume of interest. If the steam vent plume dissipates rapidly it is unlikely that condensed water will persist long in the contaminated plume.

The color of the effluent is another plume characteristic which should be observed. For fossil fuel combustion sources, the color is an indirect indication of operating conditions. The following list in Table 10-1 was compiled by EPA's Control Programs Development Divisions:

TABLE 10-1. PLUME CHARACTERISTICS AND COMBUSTION PARAMETERS

Plume color	Possible operationg parameters to investigate
White	Excess combustion air; loss of burner flame in oil-fired furnace.
Gray	Inadequate air supply or distribution.
Black	Lack of air; clogged or dirty burners or insufficient atomizing pressure, improper oil preheat; improper size of coal.
Reddish brown	Excess furnace temperatures or excess air; burner configuration.
Bluish white	High sulfur content in fuel.

For other types of sources, the color may not be as variable or may not have a distinct meaning with respect to the process or the control equipment. Nevertheless, a change in the color indicates a change in the system.

10.2 BASELINE EVALUATION

For diagnosing the change in performance of air pollution control equipment, the magnitude of the shift in opacity from historical (baseline) levels is as important as the magnitude of the opacity itself. A significant increase in opacity usually indicates an increase in the mass concentration of the effluent. The sensitivity of opacity as a diagnostic tool depends on

the characteristics of the opacity-mass concentration correlation. Case 1 in Figure 10-3 represents the most sensitive relationship between opacity and mass concentration in that a large increase in opacity indicates a small increase in the mass concentration (and presumably the mass emission rates if flow rates are similar). In Case 2, opacity has diagnostic value only up to a certain value at which point it becomes totally insensitive to the mass

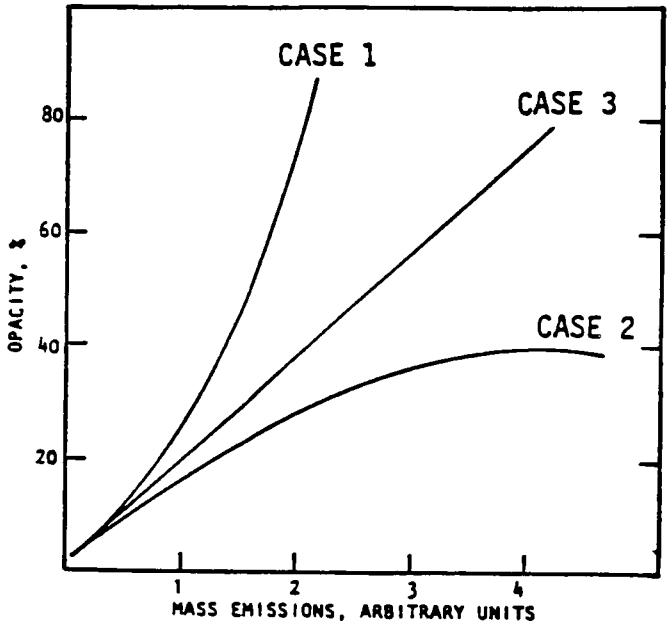

FIGURE 10-3. Opacity-Mass Relationships

emission rate. Fortunately, most of the opacity-mass concentration correlations which have been identified appear to be basically linear as represented by Case 3 in Figure 10-3.

Figure 10-4 illustrates a opacity-mass concentration correlation developed at a coal-fired power station during a five-year testing program. The relationship is typical of most correlations in that it is approximately linear. It is unusual in that there is an abundance of test data with which to prepare the correlation. Figures 10-5 and 10-6 present other correlations. It is apparent that each of these correlations have a different slope and different degrees of variability. For these reasons, the correlations must presently be developed on a site-specific basis. Procedures for calculating the 95% confidence interval for the correlations are presented in Appendix F. Usually it is not necessary to include the confidence interval when the readings are used strictly for diagnostic purposes.

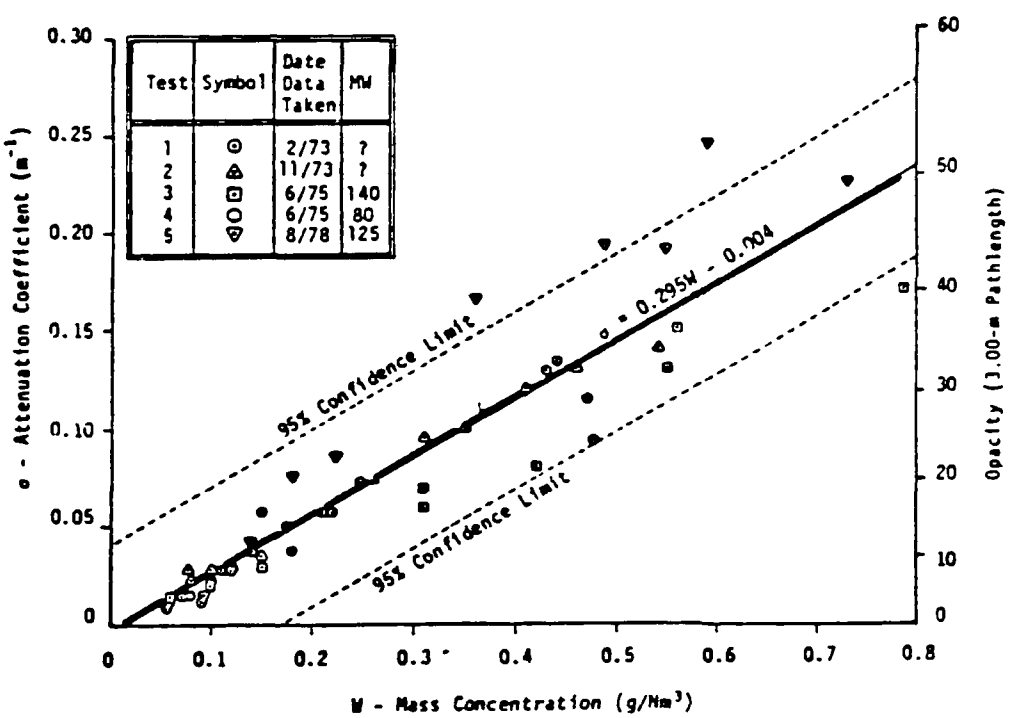

FIGURE 10-4. Example Opacity-Mass Relationship (from reference 2)

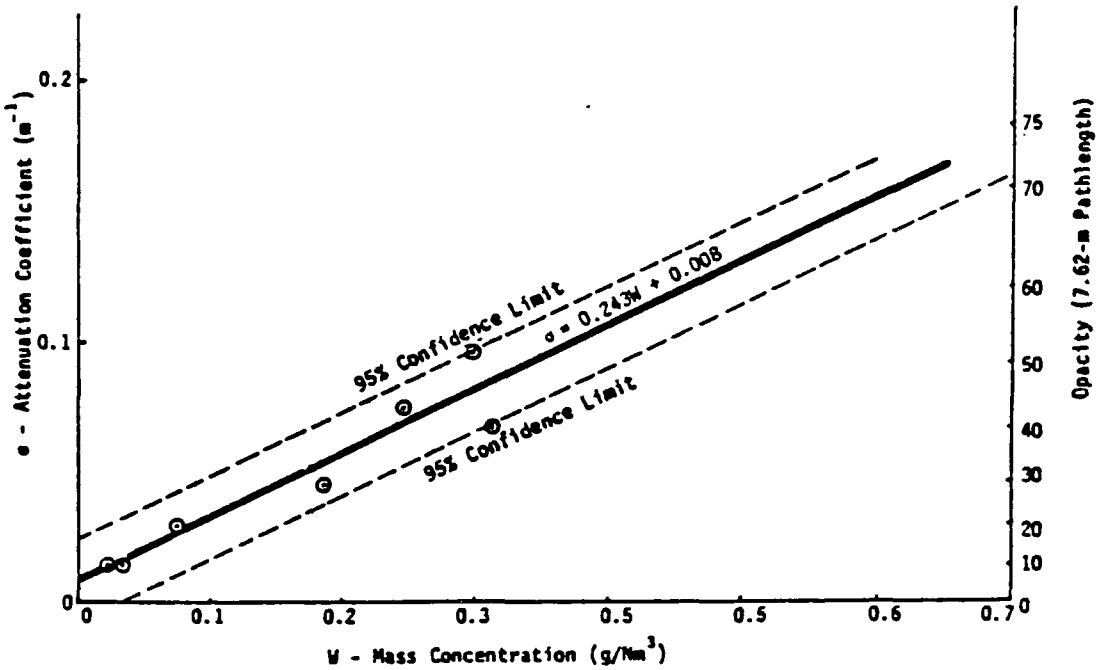

FIGURE 10-5. Attenuation Coefficient and Opacity vs. Mass Concentration Coal-Fired Power Plant

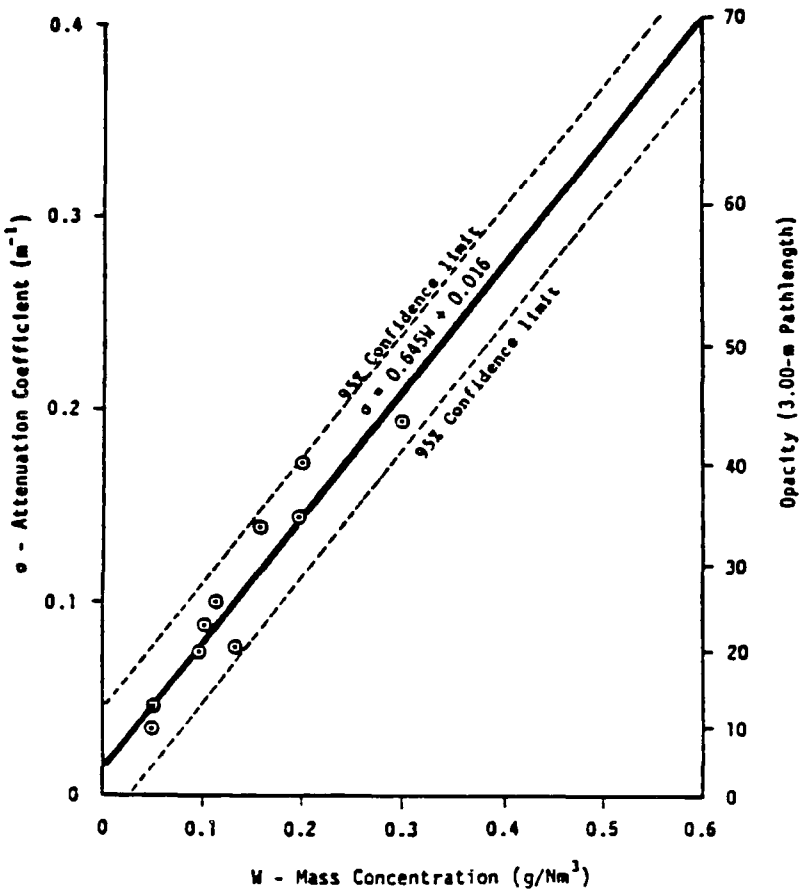

FIGURE 10-6. Attenuation Coefficient and Opacity vs. Mass Concentration Cement Plant - Wet Process

10.3 LIMITS TO THE USE OF OPACITY

Due to the particle size dependence of light scattering, opacity is not universally applicable in evaluating mass concentration. Particles above approximately 2 microns in diameter do not scatter light appreciably, therefore, substantial mass emissions of these relatively large particles may occur without high opacity levels. In such cases, the material often settles rapidly leaving deposits in the vicinity of the discharge point. Inspection/maintenance personnel must be aware of such sources and must utilize other means to routinely evaluate control device performance.

10.4 REFERENCES

1. Missen, R. and A. Stein, "Guidelines for Evaluation of Visible Emissions," report by Pacific Environmental Sciences for the U.S. EPA, Report No. EPA-340/1-75-007, April 1975.

2. "Quality Assurance Guideline for Visible Emission Training Programs," report by PEDCo. Environmental, Inc. for the U.S. EPA, EPA Contract No. 68-02-3431, Work Assignment III, August 1981.

11.0 SAFETY INFORMATION

Inspection/maintenance personnel should not be working at an industrial facility unless they have the proper safety equipment, are trained in the use of this safety equipment, and are trained to recognize potential safety hazards. All plant safety requirements and all agency safety procedures (in case of the regulatory agency inspector) must be satisfied[a]. This chapter emphasizes the importance of these safety procedures and provides supplemental information concerning many of the most common procedures.

There are a wide variety of potential hazards which may be encountered while inspecting and maintaining air pollution control equipment. A partial list of these hazards is provided below.

1. Acute exposure to toxic gases such as SO_2, O_3, NO_2, H_2S and CO due to entry into confined areas and due to fugitive leaks of flue gas around open measurement ports, corroded door gaskets, and corroded expansion joints and flanges.

2. Exposure to fume and dusts containing asbestos, lead, beryllium and arsenic.

3. Burns due to contact with hot objects such as uninsulated flue gas ducts and portable sampling/measurement equipment.

4. Heat stress due to exposure to hot process equipment, hot flue gas ducts and stacks.

5. Static electrical shock obtained while conducting measurements downstream of electrostatic precipitators or in fiberglass ducts.

6. Falls through roofs or through horizontal surfaces weakened by the accumulation of excess solids or the corrosion of interior supports in air pollution control equipment.

---

[a]The information and recommendations contained in this chapter have been compiled from sources believed to be reliable and accurate. No warranty, guarantee or representation is made by Engineering-Science as to the absolute correctness or sufficiency of any representation contained in this and other documents. It should not be assumed that all acceptable safety measures are contained in this and other publications or that other or additional measures may not be required under particular or exceptional conditions or circumstances. The information provided in this section is not intended to supercede, replace, or amend safety procedures adopted by regulatory agencies and private concerns.

7. Falls on wet walking surfaces in the vicinity of control equipment or on the access ladders to control equipment.

8. Physical injuries due to entrapment in rotating mechanical equipment such as fan sheaves and screw conveyors.

9. Head injuries from falling objects, overhead beams, and protruding equipment.

10. Hearing impairment due to exposure to noise from rappers, compressors, and process equipment.

11. Explosions of fans operating at excessive tip speeds or operating severally out-of-balance.

12. Physical injuries due to the improper opening of access hatches.

13. Asphyxiation due to improper entry into confined areas.

14. Asphyxiation due to free flowing solids discharged from hopper access hatches.

15. Eye injuries due to flying objects or splashing chemicals.

16. Foot injuries due to falling objects.

17. Explosions due to static electricity discharge within ducts being sampled or tested.

18. Exposure to toxic gases, toxic particulate, or steam rising from processes below or present in the general vicinity of elevated walkways and platforms.

19. Burns due to contact with hot, free flowing solids.

20. Burns due to contact with high pressure steam leaks.

Despite the long list of potential hazards, inspection/maintenance work on air pollution control equipment need not be dangerous. Each individual simply must develop respect for these problems and carefully adhere to the safety procedures adopted by his or her employer.

11.1 GENERAL PROCEDURES

Each individual performing inspection/maintenance work on air pollution control equipment should adhere to the following two basic rules:

1. Every situation should be carefully evaluated before work is begun.

2. Work should be halted if the individual experiences headache, eye or nose irritation, nausea, dizziness, drowsiness, vomiting, loss

of coordination, chest pains or shortness of breath. Conditions should be reevaluated before continuing the work.

The first requirement can only be satisfied by conducting the inspection or maintenance work in a methodical manner and at a controlled pace. Undue haste can easily result in careless accidents. It is also important to take a rest break whenever fatigue reaches the point that judgement is affected.

The second rule is necessary because many of the occupational hazards encountered by inspection/maintenance personnel do not have any easily recognized characteristics such as a distinctive odor. For example, some chemicals such as H_2S, which are easily recognized at low concentrations cannot be detected at high concentrations since at high concentrations they overwhelm and disable the sensory organs. Acute exposure to some materials can occur without any immediate discomfort, then later (within 24 hours) exposure will lead to severe respiratory impairment. For these reasons it is important that all personnel be familiar with the initial symptoms of acute exposure to possible hazards so that they are able to leave an area of exposure until environmental conditions can be more fully evaluated.

Each regulatory agency and industrial firm should have certain general safety procedures to minimize the risk involved in equipment maintenance and inspection. These should, at a minimum, consist of the following which are covered in the next sections: Safety training, a medical monitoring program, and written safety procedures.

11.1.1 Safety Training

All inspection/maintenance personnel should receive regularly scheduled safety instruction in safety procedures, use of personal protective equipment, and recognition of potential physical and inhalation hazards.[1,2] It is also desirable that each person receive training in First Aid and Cardio-Pulmonary Resuscitation.[2] Attendance at the safety training program should be mandatory and should be recorded in each individual's employment file. New employees assigned inspection/maintenance duties should receive this training prior to beginning field work.

If the duties include responding to hazardous chemical spills or fires or the investigation of chemical waste dump sites, considerable additional training may be necessary. Information concerning safety procedures for such work may be found in reference 1.

11.1.2 Medical Monitoring Program

Annual physical examinations should be conducted as a precondition to further work. These examinations should provide screening for evidence of exposure to toxic substances. They need not be a comprehensive health evaluation since this remains the responsibility of each individual, but should, at a minimum, include the following tests:

1. Chest X-ray
2. Electro-cardiogram
3. Blood tests
4. Eye examination
5. Liver and kidney function tests
6. Pulmonary function tests

More detailed information is available in reference 1.

11.1.3 Written Safety Procedures

A written procedures manual should be prepared by each regulatory agency and private organization involved in the inspection/maintenance of air pollution control equipment. This should at a minimum address use of personnel protective equipment, recognition of hazardous conditions, recognition of symptoms of exposure, procedures to be followed in the event of potential hazards, and the reporting of illnesses or accidents.

The manuals should be dated and revised whenever necessary. Each employee should be issued a numbered copy of this manual and should be responsible for adding modifications to the manual.

11.2 COMMON INSPECTION/MAINTENANCE HAZARDS

Safe working procedures begin with a full understanding and respect for potential hazards. Those problems most frequently encountered while working on air pollution control equipment are summarized in this section. Additional information is available in a number of excellent publications, including the three listed below:

1. Occupational Diseases, A Guide to Their Recognition, Revised Edition. U.S. Department of Health, Education and Welfare, June 1977.

2. The Industrial Environment - Its Evaluation and Control, U.S. Department of Health, Education and Welfare, 1973.

3. Sax, N.I. Dangerous Properties of Industrial Materials, Van Nostrand Reinhold Company, New York, N.Y.

11.2.1 Inhalation of Toxic Agents and Asphyxiants

There are a wide variety of toxic agents and asphyxiants which may be accidently inhaled during the inspection of an industrial facility. The value of a medical surveillance program and proper safety procedures is demonstrated in the following paragraphs which summarize the potential consequences of acute exposure to some of the most common air contaminants.

Soluble gases such as sulfur dioxide, ammonia, and chlorine have very distinctive odors and can often be detected by taste at very low concentrations. At higher levels eye, nose, and throat irritation occurs. Because of these "warning properties", these types of air contaminants can usually be recognized by inspection/maintenance personnel who can leave the immediate area or put on respirators. If the acute exposure continues, these compounds can cause severe cardio-pulmonary problems including but not limited to bronchitis and pneumonia.

Most organic compounds and nitrogen dioxide are not very soluble and these often penetrate deep into the lower lung. The initial symptoms of exposure are nonspecific and may not be recognized by inspection/maintenance personnel. These symptoms include: dizziness, drowsiness, headache, lightheadedness, and nausea. The poor "warning properties" of these types of compounds makes them extremely dangerous. Acute exposure may lead to pulmonary edema several hours after the exposure.

The chemical and physical asphyxiants are another group of air contaminants which have very poor "warning properties". Chemical asphyxiants include such gases as carbon monoxide and hydrogen sulfide. Carbon dioxide is the most common physical asphyxiant. Inspection/maintenance personnel may be unable to escape from confined and partially confined areas with high concentrations of these compounds.

The inhalation of particulate matter rarely causes immediate physical discomfort or impairment. For this reason, it is possible for undesirable quantities of toxic materials such as lead, arsenic and asbestos to reach the lung. These can be slowly absorbed into the blood system thereby allowing attack on organs such as the liver and kidney. In other cases, the materials can lead to severe respiratory problems. Many of the problems resulting from the inhalation of particulate matter develop over an extended

period of time and this fact underscores the need for a regular occupational health screening physical.

Table 11-1 is a brief summary of the initial symptoms (if any) of exposure to the common air contaminants. Since inspection/maintenance personnel are usually more at risk from short term, acute exposures than from chronic exposures, the acute symptoms are emphasized. Table 11-1 does not list all materials of significant risk, does not list all the possible symptoms, and does not provide a complete set of recommendations for personal protection equipment. It is intended simply to emphasize the importance of good safety procedures.

The Occupational Safety and Health Standards regulations[9] have very specific and detailed requirements regarding the use of respirators for protection from exposure to air contaminants. These are reproduced as Appendix D. Each individual using respirators should ensure that the requirements are satisfied. Basically this means that each individual should know how to select the proper respirator, should be trained in the use of respirators, should be fitted properly, should understand respirator maintenance requirements, and should be physically able to perform the work while wearing a respirator. Information concerning the use of respirators is available in reference 4, pages 519 to 526 and reference 7, pages 1025 to 1055.

11.2.2 Accidental Falls

Extreme caution is warranted whenever it is necessary to walk across a roof or walkway which has a heavy accumulation of solids. Occassionally these surfaces have not been designed to support this load plus the additional weight of one or two persons. When crossing such areas it is prudent to remain close to the well trodden path.

A similar problem may be encountered on the roofs of air pollution control equipment. In this case, corrosion of the interior supports can reduce the load bearing capacity of a roof, thus all should be crossed with caution.

Around wet scrubbers and any other equipment using pumps there is often a layer of water in the adjacent walkways. In some cases, this layer of water may be partially hidden by a cover of dust or fibrous material. If inspection/maintenance personnel are not careful the slick area will be discovered in a most painful manner.

TABLE 11-1. Symptoms of Exposure to Common Air Contaminants
(Source of data: References 3, 5 and 6)

Compound	Route of Entry	Personal Protection Recommended	Symptoms	Comments
Ammonia	Inhalation	Full face mask with ammonia canister, self-contained rebreather or supplied air respirator	Exposure may cause severe eye and throat irritation, nausea, perspiration, vomiting and chest pain.	Bronchitis or pneumonia may result from an intense exposure.
Arsenic	Inhalation and ingestion of dust and fume	Self-contained rebreather or supplied air respirator	Cough, chest pain, headache, general weakness, followed by gastrointestinal symptoms.	Acute arsenical poisoning due to inhalation is rare.
Asbestos	Inhalation of airborne fibers	Dust mask	No symptoms.	Prolonged exposure may cause cancer.
Benzene	Inhalation of gas	Self-contained rebreather or supplied air respirator	Eye irritation, headache, dizziness, nausea, drowsiness, convulsions.	Acute exposure may lead to unconsciousness and death. Benzene is a confirmed carcinogen.
Beryllium	Inhalation of dust or fume	Self-contained rebreather or supplied air respirator	Intense, brief exposure may result in nonproductive cough, low grade fever, chest pains, and shortness of breath.	Acute exposure to Beryllium can result in chemical pneumonitis with pulmonary edema several hours after exposure.

TABLE 11-1. Symptoms of Exposure to Common Air Contaminants (Cont'd.)
(Source of data: References 3, 5 and 6)

Compound	Route of Entry	Personal Protection Recommended	Symptoms	Comments
Cadmium	Inhalation of dust and fume	Dust mask	Acute exposure may occur without any immediate symptoms. In some cases there may be dryness in the throat, headache, cough, shortness of breath and vomiting.	Brief exposures to very high concentrations may result in pulmonary edema.
Carbon Dioxide	Inhalation of gas	Self-contained rebreather or supplied air respirator	Symptoms are those of asphyxia, including: headache, dizziness, shortness of breath, weakness, drowsiness, and ringing in ears.	Rapid recovery occurs upon return to fresh air.
Carbon Monoxide	Inhalation of gas	Self-contained rebreather or supplied air respirator	Initial symptoms include: headache, dizziness, nausea, drowsiness, pale skin color, and vomiting.	
Ethylene Oxide	Inhalation of gas	Full face respirator and protective clothing	Nausea, vomiting, eye and nose irritation, drowsiness.	Acute exposure may lead to unconsciousness and pulmonary edema.
Ethers and Epoxy Compounds	Inhalation of gas	Self-contained rebreather or supplied air respirator	Eye irritation with tear production, coughing, nausea, drowsiness.	
Hydrogen Chloride	Inhalation of mist or vapor	Full face mask	Eye and throat irritation.	Concentrations of 1,000 to 2,000 ppm are dangerous even for a brief time.

TABLE 11-1. Symptoms of Exposure to Common Air Contaminants (Cont'd.)
(Source of data: References 3, 5 and 6)

Compound	Route of Entry	Personal Protection Recommended	Symptoms	Comments
Hydrogen Sulfide	Inhalation of gas	Self-contained rebreather or supplied air respirator	Hydrogen sulfide has a distinctive rotten eggs odor at low concentrations, however, at high levels there may be no odor at all due to olfactory paralysis. Initial symptoms of acute exposure include: headache, dizziness, eye irritation, loss of coordination, weakness, and numbness.	Death may result rapidly from acute exposure. Chemical pneumonia may develop several hours after exposure.
Lead, Inorganic	Inhalation of dust, fume, or vapor; ingestion	Self-contained rebreather or supplied air respirator; full body work clothing	No immediate physical symptoms.	Work cloths should be washed separately from street cloths. Disposable shoe covers may be advisable. Lead is a cumulative poison.
Mercury, Inorganic	Inhalation of dust or vapor	Self-contained rebreather or supplied air respirator	No immediate physical symptoms.	Work clothes exposed should not be washed or stored with street clothes. Elemental mercury readily volatilizes at room temperature.
Nickel	Inhalation of dusts	Full face respirator	No immediate physical symptoms.	Nickel is a suspected carcinogen.

TABLE 11-1. Symptoms of Exposure to Common Air Contaminants (Cont'd.)
(Source of data: References 3, 5 and 6)

Compound	Route of Entry	Personal Protection Recommended	Symptoms	Comments
Nickel Carbonyl	Inhalation of gas	Full face respirator	Severe exposure can cause headache, dizziness, nausea, vomiting, fever, and difficulty breathing.	Nickel carbonyl is a confirmed carcinogen and may release CO upon decomposing.
Nitrogen Oxides (NO, NO_2)	Inhalation of gas	Self-contained rebreather or supplied air respirator	Initial symptoms include: cough, chills, fever, headache, nausea, vomiting.	Acute pulmonary edema may follow a five to twelve hour period with no apparent symptoms. During exposure only mild bronchial irritation may be experienced. Concentrations of 100-150 ppm are dangerous for periods of 30 to 60 minutes.
Ozone	Inhalation of gas	Self-contained rebreather or supplied air respirator	Eye irritation, dryness of nose and throat, choking, cough, and fatigue.	Pulmonary edema may occur several hours after severe exposure.
Sulfur Dioxide	Inhalation of gas	Self-contained rebreather or supplied air respirator	Sulfur dioxide has a strong, suffocating odor at levels greater than 0.5 ppm. The taste threshold is 0.3 to 1.0 ppm. Eye irritation begins at approximately 20 ppm.	Survivors of acute exposure may later develop chemical bronchopneumonia. Concentrations of 400 to 500 ppm are considered immediately dangerous to life.
Sulfuric Acid	Inhalation of mist	Full face gas mask	Eye irritation, tickling of the nose and throat, coughing, and sneezing. Concentrations of 0.1 to 10 ppm may be unpleasant and concentrations of 10 to 20 ppm may be unbearable.	

TABLE 11-1. Symptoms of Exposure to Common Air Contaminants (Cont'd.)
(Source of data: References 3, 5 and 6)

Compound	Route of Entry	Personal Protection Recommended	Symptoms	Comments
Toluene	Inhalation of vapors	Full face mask	Eye irritation, headache, dizziness, fatigue, drowsiness, loss of coordination.	Acute exposure may lead to collapse and coma.
Vinyl Chloride	Inhalation of vapors	Self-contained rebreather or supplied air respirator	Vinyl chloride has a pleasant, ethereal odor; exposure may cause lightheadedness, nausea, and symptoms similar to mild alcohol intoxication.	Vinyl chloride is a confirmed carcinogen.
Chlorine	Inhalation of vapors	Full face mask	Pungent odor at greater than 3.0 ppm. Throat irritation occurs at approximately 15 ppm. Acute exposure may result in cough, and chest pain, and eye throat irritation.	Pulmonary edema may occur several hours after severe exposure.

An inevitable chore of inspecting air pollution control equipment is climbing up and down ladders. During wet weather it is probable that the last person to use a ladder deposited a layer of mud on the foot rungs. Climbing the ladder may be dangerous unless the foot rails are used for the hands (rather than the more common practice of grabbing the side rungs).

11.2.3 Noise

Whenever the noise level is high enough such that normal conversation cannot be heard at a distance of 2 feet, hearing protection is necessary. Speech interference studies have indicated that this noise level is approximately equal to 82 to 88 dBA.[7,8] For comparison purposes, the OSHA limit for contiuous exposure over an 8 hour period is 90 dBA.[9]

During inspection/maintenance work, noise levels greater than 90 dBA may be encountered around electrostatic precipitator rappers, compressors and blow tubes for pulse jet fabric filters, induced draft fans, and process equipment. Even though the inspection/maintenance personnel will usually not be in the high noise location for the full 8 hour period, the use of hearing protection is: (1) consistent with plant safety policies, (2) ensures conformance with OSHA requirements, and (3) may improve communication. The latter point may surprise some who instinctively believe that communication is hindered by ear muffs or plugs. Actually there is some evidence to demonstrate improved hearing with the use of ear protection when noise levels exceed the 90 dBA range. It is believed that the hearing protection prevents distortion of the ear canal at the high noise levels while it keeps the speech-to-noise levels at a constant level.[8]

Failure to use hearing protection can lead to gradual hearing loss especially in the frequency range of 1000 to 4000 Hz. Unfortunately, there are no immediate symptoms of noise induced hearing loss. The pain threshold for most individuals is 130 dBA, well above the 90 dBA level which can adversely affect hearing.[8]

There are several basic kinds of hearing protection including: fixed size ear plugs, malleable ear plugs, and earmuffs. When used properly, any of these can reduce levels of noise 30 to 50 dB in the frequency range of 1000 to 4000 Hz.[10,11] Obtaining a proper fit with a tight accoustical seal is

very important. Some suggestions for obtaining the maximum degree of protection are listed below.

(1) If fixed size plugs are used, the fit should be checked on a regular basis since the ear canal may increase in size with regular use of any ear plug and since the ear plug may shrink slightly.

(2) Malleable plugs should be inserted before the inspector begins any work which will get his hands dirty. For this reason, the plugs should probably be inserted immediately after the pre-inspection meeting (in the case of a regulatory agency inspector) and remain in until the inspection is over. This will prevent dirt or foreign objects from causing irritation or infection of the ear canal.

(3) To obtain the best acoustical seal, the entrance to the ear canal should be opened and straightened by pulling the ear backwards with one hand while inserting the plug with the other. (For more information, refer to the illustration shown in Reference 7, page 333).

If adequate noise protection cannot be obtained by the use of a single type of protector, then an inspector may wish to use an ear muff in combination with a plug. This provides an additional attenuation of 3 to 5 dB over that available with either one alone.[10]

11.2.4 Head Protection

Inspection/maintenance-personnel should wear hardhats whenever they are on plant grounds (except of course when inside office spaces and similar sheltered areas). The hardhats should satisfy the requirements of ANSI Standards for Protective Helmets, Z89.1-1969. These should protect the individual from falling objects (impact force less than 850 lb-ft) and from collisions with low crossbeams or small equipment suspended from the ceiling.

At least once a month, the hard hat should be checked for possible cracks or a defective suspension. The latter is particularily important since it is the suspension which provides the impact protection. Instructions for regular washing of hardhats is provided in Reference 12.

11.2.5 Eye Protection

Inspection/maintenance personnel routinely pass through process equipment areas where eye protection is mandatory. Glasses with side shields or flexible goggles should be carried and put on when entering these areas. The eye pro-

tection must conform to the requirements of ANSI Standards Z87.1-1968. Practice for Occupational and Educational Eye and Face Protection. Contact lenses should not be worn.

11.2.6 Footwear

Many industrial facilities do not require safety shoes as long as entry to certain areas is not necessary. Nevertheless, safety shoes should be worn at all times while performing inspections/maintenance. Shoes with metal toe boxes are generally adequate. The footwear should meet the specifications of ANSI Standard Z41.1-1967.

11.2.7 Burns

Most of the gas streams of concern to air pollution control equipment inspection/maintenance personnel are at relatively high temperatures. For example, the gas streams from cupolas and stoker fired boilers are often 400°F to 600°F. The ducts transporting this effluent gas stream are often uninsulated and contact with a duct surface can result in a burn.

Handling pitot tubes and other sampling equipment recently withdrawn from a hot duct is another common cause of burns. Insulated gloves are available for this purpose.

11.2.8 Heat Stress

Heat stress is a potential problem for regulatory agency inspectors since they do not have the opportunity to become acclimated to hot environments. Measurements of effluent conditions often brings inspectors into close proximity of hot ducts and/or stacks, both of which radiate heat. If preventive measures are not taken, either heat cramps or heat exhaustion may result. The symptoms of these problems are severe cramps, extreme fatigue, weakness, nausea, clammy or moist skin, high pulse rate, and a high body core temperature.[13] To reduce the risk of heat stress the inspection/maintenance personnel should take the precautions outlined below:

(1) Take frequent breaks in a cooler area.

(2) Drink fluids recommended by a physician or industrial hygiene professional for such conditions.

(3) If possible, schedule strenuous work and hot work in the cooler parts of the day.

11.2.9 Cold Weather Conditions

Routine inspection of air pollution control equipment should not be done when the wind chill factor is below -20°F. The wind chill factor is a combined index of the ambient temperature and the wind velocity as shown in Table 11-2. Below -20°F there is an increased risk for localized cold injuries. There is also a reasonable chance that measurements made under the stress of excessively cold conditions will not be accurate due either to the impaired judgement of the inspector or due to the malfunction of portable instruments. Additionally, during such periods, plant maintenance personnel often must cope with process operational problems caused by the cold conditions. Thus, regulatory agency inspectors should not perform any inspections in very cold weather unless warranted by a public health emergency or a severe problem demanding immediate attention.

11.2.10 Electrical Shock

High static electrical charges can build up in certain ducts and control systems. When inspection/maintenance personnel attempt to insert a pitot tube, thermocouple, or other probe into the duct they may receive a considerable shock. In some cases, the static discharge could initiate a serious explosion. Before inserting any portable test equipment or cleanout rod into a duct and gas stream, the test equipment probe and rod should be grounded.* This consists of: (1) a proper electrical bond between the probe/rod and the sidewall of the duct (or control device) and (2) a proper ground connected to the sidewall.

The existence of a proper ground for the sidewall must be confirmed with the appropriate plant personnel. If it is impossible to prepare a proper bonding wire <u>or</u> it is impossible to confirm adequacy of the sidewall ground, the measurement should <u>not</u> be conducted.

Also before a measurement is conducted, it is important to confirm that the proper grounding equipment has been selected and that there are no defects which would interfere with the static electricity dissipation. Each bonding wire and ground connection should be visually and manually checked before the measurement is made.

*For additional information on grounding see National Fire Protection Association Publication No. 77 (1983) and American Petroleom Institute Recommended Practice 2003, Fourth Edition (1982).

TABLE 11-2. Wind Chill Factors

Wind in m.p.h.	Local Temperature in Degrees Fahrenheit								
	32	23	14	5	-4	-13	-22	-31	-40
	Equivalent Temperature (Wind Plus Local Temperature)								
Calm	32	23	14	5	-4	-13	-22	-31	-40
5	29	20	10	1	-9	-18	-28	-37	-47
10	18	7	-4	-15	-26	-37	-48	-59	-70
15	13	-1	-13	-25	-37	-49	-61	-73	-88
20	7	-6	-19	-32	-44	-57	-70	-83	-98
25	3	-10	-24	-37	-50	-64	-77	-90	-104
30	1	-13	-27	-41	-54	-68	-82	-97	-109
35	-1	-15	-29	-43	-57	-71	-85	-99	-113
40	-3	-17	-31	-45	-59	-74	-87	-102	-116
45	-3	-18	-32	-46	-61	-75	-89	-104	-118
50	-4	-18	-33	-47	-62	-76	-91	-105	-120
	Little Danger for Those Properly Clothed →		Considerable Danger →			Extreme Danger →			

The portable instruments should not be taken into plants and facilities where there is a chance of exposure to explosive gases, vapors, fibers, or dusts. Such industrial operations include, but are not limited to: grain elevators, grain milling operations, coal dust handling facilities, and many types of chemical processes. The battery operated thermocouples, pH meters, and typical flashlights are not explosion proof.

A regulatory agency inspector should never attempt to open an electrical cabinet to make ammeter readings. Such measurements should always be made by qualified plant personnel.

Inspection/maintenance work should not be conducted during threatening weather conditions. Lightening sometimes travels a considerable distance ahead of an approaching storm and normally strikes the high areas of a plant where the air pollution control equipment is usually located.

11.2.11 Ionizing Radiation

The new hopper level detection instrumentation used frequently on large scale fabric filter and electrostatic precipitator systems employs a source of gamma radiation to detect the accumulation of solids. If the source unit has been damaged due to impact from moving equipment or some other cause, excessive radiation levels in the immediate vicinity of the source could result. Normal safety procedures in this case include posting warning signs and roping off the damaged area until the source can be sealed. The regulatory agency inspector should thus be cautioned never to approach a damaged nuclear type hopper level detector.

When entering the hopper, plant maintenance personnel should carefully complete the lock-out procedure for the nuclear type level detector. The shield must cover the source unit in order to provide protection.

11.3 CONFINED AREA ENTRY

A confined area may be defined as an enclosure in which dangerous air contamination cannot be prevented or removed by natural ventilation through openings. Access to the enclosure is usually restricted, so that it is difficult for a worker to escape or to be rescued. Examples of such confined areas include fabric filter compartments, electrostatic precipitator penthouses and electrode sections, wet scrubber internals, mechanical collector

internals, and hoppers on all types of air pollution control equipment. Maintenance personnel must enter these areas on regular basis; regulatory agency inspectors should not enter confined areas. It is important to note:

> Plant maintenance personnel should be trained in proper confined area entry procedures, should be given the necessary respirators and personal protective equipment, and should be required to perform all work in strict adherence to plant safety procedures and OSHA requirements.

Potential dangers of confined area entry can be grouped into three categories: oxygen deficiency, explosion, and exposure to toxic air contaminants. Oxygen deficiency is a very common and insidious hazard since many of the gas streams treated in air pollution control equipment have oxygen concentrations of only 4% to 12%. Oxygen levels of less than 19.5% produce detectable physiological changes, while levels less than 16.0% result in rapid disability and death. Unfortunately, the initial sensory symptoms of low oxygen levels are simply a slight difficulty in breathing and ringing in the ears. Maintenance personnel may ignore these symptoms and then rapidly become incapacitated. Prior to entering any confined space, the environment inside should first be tested using a portable oxygen analyzer. The probe should be long enough so that the gas actually in the confined area is tested rather than the air leaking in around the partially opened hatch.

Maintenance personnel must be cognizant of the explosion potential inside air pollution control equipment. Many combustion sources generate moderately high concentrations of carbon monoxide, especially during upset periods. A combustible gas analyzer should be used to detect the presence of CO and organic vapors. The particulate matter collected in many control devices is also potentially explosive.

Some of the most common toxic air contaminants in the confined areas of air pollution control equipment are H_2S, SO_2, NO_2 and particulate. Maintenance personnel should select and use the proper respirator based on the initial sampling of the interior environment of each confined area.*

*The selection and use of respirators are subjects too involved and too important to be covered briefly; for these reasons, they are beyond the scope of this manual. For detailed information please read the appropriate references listed earlier.

11.3.1 General Entry Procedures

The National Institute of Occupational Safety and Health (NIOSH) has presented specific guidelines for working inside confined areas. Excerpts from this document are provided in Appendix E. Maintenance personnel should study the excerpts in Appendix E and then read the entire NIOSH document.

A written permit should be obtained prior to entry into confined areas. This should confirm that the established lockout and isolation procedures have been followed and the personnel have the proper safety equipment. This permit should be posted in a conspicuous location. During the lockout the air pollution control system and all accessory systems should be locked and tagged. The accessory systems include: fans, rapper systems, conveyors, compressors, solid discharge valves, hopper and insulator heaters, hopper level indicators, and pumps. If more than one person is involved in the entry, each person should have his own lock and key for each item which must be locked out.

The access hatch to the confined area should be opened with extreme caution. If a unit which operates at a positive pressure has not been deenergized yet, the hatch will have as much as 300 pounds of force on the interior surface of the hatch (6 inches static pressure, hatch 2'x4'). Once the last bolt or latch has been removed, the hatch will accelerate outward. Units which operate at negative pressures have the opposite problem in that the hatch is held closed with several hundred pounds of force. Personnel who wrap their hands around the hatch in a futile attempt to "break the seal" can suffer severe injuries if the hatch slams shut again. Opening of hopper access doors must be done with particular care since hot, free flowing solids may be piled up behind the door. Once the hatch is opened these solids can suffocate, severely burn, and/or otherwise injure personnel below the access hatch. Additionally, many of the solids collected in air pollution control systems are combustible. When the hopper access hatch is removed the inrush of ambient air (and oxygen) can cause fires inside the control device.

Once safe access is achieved, the environment should be carefully observed and tested. The oxygen concentration and the levels of potentially toxic gases should be determined by portable meters. The dust levels should be observed. Entry should not be made until the proper personal protective equip-

ment has been put on and checked out. There should always be an observer in the vicinity of the access hatch who is trained and equipped to rescue the worker(s).

There are several specific confined area entry problems for each type of air pollution control system. These are summarized in the following sections.

11.3.1.1 Electrostatic Precipitators - A precipitator which has been deenergized for a period up to several days may still have a residual electrostatic charge of 10 to 20 kilovolts on the electrodes. The electrodes could deliver a fatal shock unless this charge is first dissipated to ground using a "hot stick". A "hot stick" normally consists of a long wooden stick with a metal hook on one end and a flexible metal conductor connected to a ground. This should be used each time entry is made into a penthouse and electrode zone. Regular maintenance (primarily involving cleaning and testing) is necessary for the hot sticks. If the sound of "buzzing" characteristic of a hive of bees is ever heard upon opening of a hatch, the unit is still energized. Work should be immediately halted!

While working inside an electrostatic precipitator, a securly connected ground should be kept in plain view at all time. If the power supply is accidentally energized this ground could provide some degree of protection.

11.3.1.2 Fabric Filters - Large fabric filter systems are often built with a number of compartments, one or more of which may be isolated for maintenance. Entry to the off-line compartments for maintenance should be done with the same care used for entry into any other confined area. The dampers which isolate one compartment from another often leak which can result in high concentrations of toxic gases such as H_2S and CO in the off-line compartment.

While performing maintenance work inside a fabric filter, care should be taken that the self-contained rebreather or supplied air respirator do not damage the bags adjacent to the walkways; there is often very little clearance inside fabric filters. Before entering fabric filters, the size of the hatch should be considered with respect to the difficulty in removing a worker in an emergency situation. Maintenance personnel inside fabric filters (also electrostatic precipitators and mechanical collectors) are

particularly vulnerable to heat stress due to the additional work inherent in the use of respirator and the moderately high temperatures usually found inside this equipment.

The purpose of the preceding discussions is to emphasize the importance of proper entry procedures for air pollution control equipment. Some basic considerations have been introduced. Individuals involved in this work should carefully read OSHA requirements[9] and other references on the subject.

11.4 REFERENCES

1. Safety Manual for Hazardous Waste Site Investigation, U.S. Environmental Protection Agency. Draft Manual dated September 1979. Available from the Office of Occupational Health and Safety, Waterside Mall, 401 M Street S.W., Washington, D.C.

2. Stack Sampling Safety Manual, Prepared by Norman V. Steere & Associates for the U.S. Environmental Protection Agency, Contract No. 68-02-2892, September 1978.

3. Occupational Diseases, A Guide to their Recognition, Revised Edition, U.S. Department of Health, Education and Welfare, June 1977.

4. The Industrial Environment - Its Evaluation and Control, U.S. Department of Health, Education and Welfare, 1973.

5. Dangerous Properties of Industrial Materials, Sax, N.I. Van Nostrand Reinhold Company, New York, N.Y.

6. Accident Prevention Manual for Industrial Operations, National Safety Council, 6th Edition, 1971.

7. Patty's Industrial Hygiene and Toxicology, Third Revised Edition, Volume 1. G. Clayton and F. Clayton, Editors. Wiley-Interscience Publication Page 340.

8. Reference 6, Page 1152.

9. Occupational Safety and Health Standards, U.S. Department of Labor, Federal Register, Vol. 37, Number 202, page 22157, October 18, 1972.

10. Reference 6, Page 1155.

11. Reference 7, Pages 337-338.

12. Reference 6, Page 1149.

13. Reference, Pages 937-948.

14. A Primer on Confined Area Entry, Rexnord Safety Products, Malvern, Pa.

12.0 ADMINISTRATIVE AND LEGAL ASPECTS OF PLANT INSPECTIONS

12.1 INTRODUCTION

The majority of this inspection manual deals with Counterflow Inspection Techniques for the actual performance evaluation of air pollution control equipment. An equally important consideration in conducting air pollution field inspections is the administrative aspects of the inspection including preparation, entry to the plant, post-inspection procedures, and report writing. The legal aspects and consequences of the enforcement inspection must be considered prior to visiting any facility.

This chapter presents the administrative and legal aspects of conducting a field inspection. Due to the complex nature of environmental law and the differences in statutes from state to state it can not be an exhaustive study of the subject, nor can it be used as the final word on the specific laws or regulations. Rather, the aim of this chapter is to bring to the prospective inspector's attention the various administrative elements of the entire inspection scheme which are essential to a successful and complete regulatory inspection. It covers procedures for preparation for an inspection, plant entry practices, points to be aware of during the inspection and some post-inspection and report preparation considerations. In addition, special sections of this chapter are devoted to methods of handling confidential business information and photographic documentation.

12.2 PREINSPECTION PROCEDURES

12.2.1 File Review

Prior to inspecting a facility an agency inspector should review the agency files concerning that facility to thoroughly familiarize himself with all pertinent information on the facility's particular process(es), types of emissions, and operating history. The following items should be checked. Copies of items 1 and 2 from the list should be obtained for the inspector's "working" file.

1. Pending compliance schedules and variances,

2. Construction and/or operating permits pertaining to source processes,

3. Past conditions of noncompliance,

4. Malfunctions reports, and

5. History of abnormal operations.

The inspector should also obtain a copy of appropriate plant layout drawings to assist in locating emission points, drawing flow diagrams, and in preparing the inspection report. If available in the files, the inspector should note what personal safety equipment is required. The files should always be reviewed before entry to the plant so that important plant characteristics will be more easily remembered.

The inspector should prepare a concise "working" file containing basic plant information, process descriptions, flowsheets, and acceptable operating conditions (Appendices A and B). It should contain the following to facilitate inspections and/or preparations:

1. A chronology of control actions, inspections, and complaints concerning each major source in the plant;

2. A flowsheet identifying sources, control devices, monitors, and other information of interest;

3. The most recent permits for each major source;

4. Previous inspection checklists; and

5. Baseline performance data.

Once compiled, such a file is easy to update and allows an inspector to do an effective file review without struggling through the typically voluminous central files.

The inspector should know what regulations are applicable to the facility and if he has any questions should consult the agency administration or legal staff prior to conducting the inspection. It is important to know what data is useful in confirming compliance and what evidence is necessary to document possible violations of each of the applicable regulations.

Based on reviews of agency and any previous "working" files, the inspector should schedule an inspection time when plant processes will probably be

operating at representative conditions. The scheduling of a time to visit plants having batch operations or other irregular operating schedules (e.g., seasonal) is especially important.

12.2.2 Inspection Announcement

Agency supervisory personnel should be consulted concerning agency policy on the advance announcement of inspections. If it is desirable to announce the inspection in advance, leads of 1 day to 1 week are generally adequate to ensure that the necessary plant personnel will be available. The person contacted should be one having the authority to release data and samples and to arrange for access to specific processes.

12.2.3 Inspection Equipment

Necessary tools and safety gear should be organized and be ready to carry in a portable case from emission point to emission point.

Carry at all Times

Hardhat
Safety glasses or goggles
Gloves
Coveralls
Safety shoes (steel toed)
Ear protectors
Dust masks
Tool belt
Tape measure
Flashlight
Differential pressure gauges
Gauge magnets
Thermocouples
Multimeter and grounding cables
pH paper or pH meter
Duct tape
Pocket guide of industrial hazards

Other equipment should be gathered to be left in a central location such as the inspector's car until needed.

Carry When Needed

Respirator with appropriate cartridge(s)
Ropes and harness
Stopwatch
Prybar
Velometer
Pitot tubes
Bucket
Sample bottles (Continued)

Combustion gas analyzer
Oxygen meter
Tachometer
Self-contained breathing equipment

Particularly important is the safety equipment--including the hard hat, the safety glasses, and the ear protectors. Remember, it is the inspector's responsibility to know what safety equipment will be needed and to have it before entering the plant. Access to certain industrial facilities can be rightfully restricted or refused by plant representatives if designated safety equipment is not worn.

Some plant may require that equipment brought on to plant property be signed in. An equipment inventory form may facilitate check-in of the inspection equipment.

12.2.4 Plant Surroundings

Observations of areas surrounding the plant before entering may reveal a variety of signs of operational practices and pollutant emissions which can aid in the preentry evaluation, including:

1. Obvious vegetation damage near the plant,
2. Odors downwind of the plant,
3. Deposits on cars parked closeby,
4. Other signs of "dusting" downwind of the plant,
5. Fugitive emissions near plant boundaries,
6. Conditions around the product and/or waste storage piles,
7. Conditions near lagoons and sludge ponds, and
8. Proximity of source to potential receptors.

Some of the signs may indicate that fugitive emission sources should be added to the inspection agenda. If odors are a problem, the weather conditions including wind direction should be noted for inclusion in the inspection report; once inside the plant, olfactory fatigue may (under certain circumstances) reduce the inspector's ability to detect odors.

12.2.5 Visible Emission Observations

In addition to observing the plant surroundings prior to entry, the inspector can also perform visible emission observations at this time. It is

possible that not all emission points will be visible from a location outside the plant property lines, but those that are may be conveniently read before entry. Chapter 10 details the procedures for these observations.

It is appropriate for the inspector to inform plant management of excess visible emissions subsequent to their observation; and at the same time he should find out what caused them. Notification of the plant officials of excess emissions gives them the opportunity to promptly evaluate the problem. There may be statutes which require notification and the inspector should discuss this with his agency's legal staff.

12.2.6 Plant Entry

Arrival at the facility must be during normal working hours. As soon as the inspector arrives on the premises he should locate a responsible plant official usually the plant owner or manager. In the case of an announced inspection this person would most probably be the official to whom notification was made. It is important that the inspector note the name and title of this official. The inspector should be prepared to present the official with credentials and to summarize the reasons for the plant visit. Credentials provide the plant official with assurance that the inspector is a lawful representative of the agency. Proper credentials should include the inspector's photograph, signature, his physical description, (age, height, weight, color of hair and eyes), and the authority for the inspection.

Unless express permission has been obtained from the inspector's employer, visitor release forms and waivers which purport to release the company from tort liability should not be signed. An inspector may waive his right to sue for damages by signing these release forms. The precise effect of signing an advance release of liability for negligence depends upon the law of the state in which the tort occurs. The State Attorney General can make a current determination of the effect of these waivers for each individual state. It is suggested that the inspector consult with the legal staff of his agency and have them obtain a determination. If the plant official denies entry for refusal to sign a waiver, the inspector should take down the official's name and title, leave the plant, and contact his supervisor for further instructions.

Inspectors have, in the past, occasionally been asked to sign nondisclosure statements or agreements. These agreements vary slightly in content from one to another, but generally require that confidential information, disclosed to an inspector during the course of an inspection, be handled thereafter in a specified manner. An inspector should not sign such agreements unless the agency's legal counsel has expressely approved the agreement.

To avoid subsequent legal entanglements, an inspector must gain entry to a plant's private premises and perform inspection activities in a manner consistent with the company's right of privacy guaranteed by the Fourth Amendment of the U.S. Constitution. In a recent Supreme Court decision [Marshall v. Barlow's, Inc. 436 U.S. 307 (1978)], the court held that an OSHA inspector was not entitled to enter a work site without either (1) the owner's consent, or (2) a warrant. This decision has affected the policy for conducting inspections under EPA's programs and the state programs and has made it important for all federal and state inspectors to conduct inspections in conformance with their agency's policies.

In order to have the background information necessary to obtain a warrant and following the guidance of the Barlow decision, there are several procedural steps that should be followed when an authorized plant official refuses entry to an inspector:

1. Tactfully discuss the reason for denial with the plant official. This is to insure that it has not been based on a misunderstanding of some sort. If resolution is beyond the authority of the inspector he might suggest that the official seek advice from the company's attorneys on clarification of EPA's or the State's authority for inspection under the Clean Air Act and State law.

2. Note the facility name and exact address, the name and title of the plant officials approached, the authority of the person issuing the denial (he must be authorized), the date and time of denial, the reason for denial, facility appearance, and any reasonable suspicions as to why entry was refused.

3. The inspector should be very careful to avoid any situations that might be construed as threatening or inflammatory. Under no circumstances should he cite the potential penalties of entry denial.

4. Lastly, the inspector should withdraw from the premises and contact his supervisor to decide on a subsequent course of action.

These procedures also apply in the additional case that consent is withdrawn or partially withdrawn during the inspection. In an EPA "Memorandum

on Inspection Procedures" (April 11,1979)[1], it is stated that all evidence obtained prior to the withdrawal of consent is considered admissable. When the inspector is denied access only to certain parts of the plant, he should make note of this including the area of the plant and the official's reason for denying access. The inspection should be completed to the extent allowable and then, after leaving the facility, the Agency administration should be contacted to determine whether a warrant should be obtained to inspect the portions of the facility not seen.

All observations pertaining to the denial should be carefully noted in the inspection field notes, they will be important for use in affidavit writing if a warrant is later sought.

12.2.6.1 Warrants - In the event that a plant official persists in refusing plant entry or withdraws consent during the course of an inspection, an administrative or criminal warrant may be used to gain entry into the plant. A warrant is a judicial authorization for an appropriate official to enter a specifically described location and perform specifically described inspection functions. The inspector should always confer with his supervisor to determine that this course of action is the most appropriate.

There are two types of warrants: criminal and civil (or administrative) warrants. Administrative inspection warrants are the type most often sought the case of plant entry denial; criminal search warrants are only used in cases where the inspection is intended, in whole or in part, to gather evidence for a possible criminal prosecution. To obtain a criminal search warrant, one must be able to demonstrate criminal probable cause which is based on whether a person of ordinary caution and prudence would be led to believe and conscientiously entertain a strong suspicion of a violation. Administrative warrants are issued upon the showing of (1) civil probable cause or (2) that the establishment was selected for inspection pursuant to a neutral administrative inspection scheme. Showing civil probable cause consists of demonstrating specific evidence of an existing violation. A neutral or reasonable inspection scheme would include schemes such as annual inspections of permit holders in a given program.[1]

When securing a warrant three documents have to be drafted, an application for a warrant, an accompanying affidavit and the warrant itself. The application identifies the statutes and regulations under which the Agency seeks the

warrant. In addition, it clearly identifies the site or establishment to be inspected including, if possible, the name of the owner and/or operator.

The affidavit(s) in support of the warrant application contain the factual background for seeking the warrant. An affidavit is a sworn statement signed by someone with personal knowledge of the facts stated therein and witnessed by a notary public or the magistrate. In cases where entry to a plant has been denied, at least one affidavit would be signed by the inspector who was refused entry. An affidavit for a warrant sought in the absence of probable cause should incorporate the neutral administrative inspection scheme which was the basis for attempting to inspect that particular establishment.

The inspector works in conjunction with the Agency attorney to prepare the warrant documents. It is not important that the inspector be able to word his affidavit in proper legal terminology, but that he has carefully recorded at the time denial of entry, and obtained previous to the inspection, the pertinent information needed to write the warrant application and affidavit:

- Address of premises,
- Names and titles of owner and authorized person who refused entry,
- Time and place of refusal,
- Reason for refusal,
- Reason for inspection, and
- Description of premises and equipment to be inspected.

It is important that the warrant specify to the broadest extent possible the areas that are intended to be inspected, the records to be inspected, samples to be taken, and articles to be seized. In general, the stated scope of inspection in civil warrants can be broader than in criminal warrants.

When the agency attorney completes the preparation of the legal documents, they must be presented to the proper judge for his signature on the warrant to render it legally binding. For an inspection by EPA authority, the warrant would be signed by a U.S. Attorney; state inspection warrants are signed by a state judge. The assisting attorney should be able to direct the state inspector to the proper court and judge. The judge has the option of questioning the applicant and any other witnesses before deciding to issue the warrant.

The conditions of serving a warrant vary from state to state and with the federal courts, but some common things to be aware of are:

- Required notice to the source that a warrant has been issued,
- Effective time for execution and return of warrant to the court,
- Reasonable time for inspection (e.g. during normal working hours), and
- Restrictions on forcible entry.

When the inspector serves the warrant on the facility owner or his authorized representative, a copy of the warrant should be left with the plant official. The inspection must be conducted strictly in accordance with the specifications of the warrant. The inspector who conducts an illegal search can be liable for civil damages. If samples or records are taken, receipts must be issued. The inspector must maintain an inventory of all such property taken from the premises.

When the inspection has been completed, the warrant is returned to the magistrate. The person serving the warrant usually signs the return of service. A copy of the inventory of property removed from the facility premises must be submitted to the court upon return of the warrant and the inspector should be present to certify that the inventory is correct.

There are three conditions under which a facility may be inspected without the company being justified in requiring a warrant. The first condition would be in an emergency when there is not enough time to obtain a warrant. Emergency situations include potential imminent hazard situations and situations where evidence might potentially be destroyed or the violation will disappear before a warrant can be obtained. If the facility refuses entry under these situations, the inspector would need the assistance of a state or U.S. Marshall to gain entry. Secondly, observations by inspectors of things that are in plain view, things that a member of the public could be in a position to observe, also do not require a warrant. This includes observations made from the public area of a plant or from private property which is not normally closed to the public. Third, some types of abatement programs specifically require right of warrantless entry.[1]

It should be mentioned here that several special instances exist where an inspector might seek a warrant <u>before</u> there has been any denial of entry to a facility. These include instances when surprise is particularly crucial to the inspection, when a company's prior refusals or other bad conduct indicate it will be likely that entry is denied again, or when the distance to a U.S. Attorney or magistrate is so considerable that excessive travel time would be wasted if entry were refused.[1]

12.2.7 Preinspection Interview

Every inspection should begin with a preinspection interview. The inspector should plan this initial interview with the plant owner, manager or other authorized official prior to the in-plant inspection. During this interview he should discuss the following points:

1. The purpose and scope of the inspection,
2. The type of measurements to be made, and the type of samples (if any) to be acquired,
3. The operational status of all process and pollution control equipment to be evaluated,
4. Inspector's preferred inspection agenda,
5. Changes in plant management that need to be noted in the agency files,
6. Plant safety requirements,
7. Scheduling of a post-inspection interview,
8. Operating records required by Standards of Performance for New Sources (NSPS) and/or for determinations of operating conditions specified in permits,
9. Applicable regulatory requirements and their specific applications,
10. Company's right to request confidentiality of business information,
11. Whether photographs are allowed, and
12. Union agreements.

In regard to confidentiality, it is most important that the inspector be prepared to discuss how his agency or organization handles information claimed confidential including the procedures involved in determining confidentiality. A suggested methodology concerning handling business confidential information can be found in Section 12.5.

Other issues the inspector should be prepared to discuss in the event that company officials have any questions concerning them include:

1. Authority for the inspection,
2. Agency organization, and
3. Details of new or existing regulations.

The inspector should request that a company official accompany him during the inspection to answer questions and to facilitate designation of confidential business data.

12.3 FIELD PROCEDURES

The inspector should respect all union-company agreements. If these agreements so require, the inspector should request that union personnel make any necessary measurements and acquire any samples. This is done under the supervision of the company representative and with the guidance of the

inspector. The assistance of union personnel considerably accelerates the field work since these individuals have the proper tools, and are thoroughly familiar with the locations of static pressure taps, measurement ports, and control equipment instruments. The inspector should not seek information from union personnel regarding the operation and maintenance at the plant. This is unfair to both the union personnel and the plant representative since the union operators are not authorized to release this information and may not be aware of the confidential nature of some of the information.

The inspector should keep in mind the public relations liason part of his role as inspector and seek to develop or improve the good working relationship with the plant officials. An inspector can do this by adhering to the following common sense rules:

1. Remain courteous at all times, and
2. Respect the normal working schedule of the plant personnel.

12.4 POST-INSPECTION PROCEDURES

12.4.1 Post-inspection Interview

Having evaluated the exhaust systems, monitoring equipment control systems, and possibly the processes themselves, the inspector should again meet with a plant official to:

1. Ask follow-up questions as necessary,
2. Ensure that all confidential information has been noted in the field data sheets,
3. Review inspection notes so that there is general agreement on the technical facts,
4. Discuss need for a follow-up inspection or additional records, and
5. Prepare and deliver receipts for any samples taken.

Under no circumstances during these discussions should the inspector make judgements or conclusions concerning the compliance of the source with applicable regulations. He may state matters of fact (i.e. smoke opacity at a certain stack exhaust point was 20%), but should not relate these to facility compliance.

12.4.2 File Update and Report Preparation

The source files, including inspection reports, are the agency's source of information on any particular facility, thus the inspectors contribution in updating the files and preparing inspection reports is most vital.

As soon as possible after arriving back at the office, while all the events of the inspection are still fresh in his mind, the inspector should change all appropriate file entries. He should also begin preparing his inspection report. Most agencies have a preferred report style, so specific format will not be dealt with in this document. The report should, though, include (1) the conclusions of the inspector based on observations and calculations stated clearly in concise paragraphs, (2) the control device diagnostic checklists found in Appendix D, and (3) a cover page (see example shown in Table 9) with the following information:

- Any change in responsible plant personnel,
- Requested permit changes or reported process modifications,
- Results of the Counterflow evaluation,
- Action requested,
- Inspector's signature, and
- Date of inspection.

A copy of the report should be kept both in the inspector's "working" file and in the agency's central file.

12.5 HANDLING CONFIDENTIAL BUSINESS INFORMATION

Industry is becoming increasingly sensitive to and aware of agency use and disclosure of confidential business information. This subject has become a major point of contention in regard to allowing inspectors on plant property. For this reason, it is especially important for all agencies performing inspections to adopt rules and guidelines for the handling of confidential business information. The presentation to companies of an organized, secure scheme for confidential information handling will do much to increase their confidence in an agency and their rapport with its representative plant inspectors.

As the current time the Environmental Protection Agency and most State agencies have established policies and procedures for handling proprietary information. Most of these include penalties for wrongful disclosure and formal procedures for safeguarding privileged information. Penalties for Federal employees, for example, are fines up to $1,000 and one year in prison and dismissal from employment and are set forth in the Code of Federal Regulations, 40 CFR Chapter 1, Part 2, Section 2.211 and the United States Code, Title 18, Section 1905. State and local agency employees should check with agency attorneys to determine their personal liability. When state and

local agencies are delegated authority for the New Source Performance Standards and National Emission Standards for Hazardous Air Pollutants by EPA, then they may be liable under the same provisions as Federal employees.

12.5.1 Defining Confidential Business Information

From the inspector's standpoint, confidential information may be defined as information received under a request of confidentiality which may concern or relate to trade secrets, processes, operations, style of work or apparatus, or the identity, confidential statistical data, amount or source of any income, profits, losses, or expenditures. This information could be in written form, in photographs, or in the inspector's memory.

12.5.2 Suggested Handling Procedures

This section summarizes a suggested set of procedures to be used by the inspector and the agency in safeguarding confidential information obtained during field inspections. Although each inspector and agency may use somewhat different procedures depending on the agency policies, this section should serve to bring to the inspector's attention the typical methods used in handling privileged information.

12.5.2.1 Receipt of Confidential Business Data - As stated previously, the inspector must be careful to identify all privileged information collected during an inspection. And, since confidential information involves extra paperwork and possible legal consequences, he should avoid collecting any privileged information unnecessarily. Plant officials should be given an opportunity to identify privileged information and to request confidentiality. They should also be informed, if agency policy, that they may also request confidentiality at a later time assuming the data has not already been disclosed. The inspector should not, in any case, speculate whether the data in question will eventually be considered confidential; this determination is a legal and administrative policy decision and not within the inspector's authority.

While the field inspector is on the road, inspection documents containing privileged information should be marked and kept in a locked briefcase, while physical samples should be marked and kept in a locked container. The complete inventory of confidential information received should be compiled by

stamping each page received with an ink stamp similar to that shown below. At the conclusion of an on-site inspection, the inspector should prepare a list of all documents received which indicates the following:

(1) A concise, general description of each document,
(2) The total number of pages, and
(3) A document number.

CLAIMED CONFIDENTIAL

DOCUMENT_____ PAGE_____ OF_____

REC'D. FROM_____ DATE_____

REC'D. BY_____ PN_____

12.5.2.2 Handling in the Office - Immediately upon return to the agency, the potentially confidential information (data, charts, drawings, etc.) should be placed in a secure, lockable file cabinet designated especially for confidential information. Records should be kept of every person who uses a document; this may be in the form of a sign out sheet for each document. In addition, it may be useful in keeping document exposure to a minimum, that each document bear an attached list of these persons authorized to use it.

In general, confidential documents should not be reproduced. If, for some reason, it becomes necessary to copy privileged information, all copies should be included in the confidential document inventory and accounted for as would be an original.

12.5.2.3 Privileged Data and Report Preparation - In preparing the inspection report, it is recommended that confidential information be reference in a non-confidential manner (i.e., by reference to the document in the confidential files and a general description of the information contained therein). If necessary, the confidential data may be included in the report, but the entire report must then be treated as a confidential document.

12.5.2.4 Potentially Confidential Information - Although all inspections should include ample opportunity for plant officials to request confidential handling of designated data, every allowance should be made to safeguard potentially confidential data (it may be stamped "Confidential--Pending Company Review") until a company indicates its intentions or submits a written request. In cases where an agency has questions concerning the confidentiality of certain information, they may forward the information or inspection

report to a responsible industry official for company review. The official should be requested by cover letter to review the report and to clearly mark any data considered confidential. Until the reviewed report is returned the data included should be treated as privileged information.

12.6 USE OF PHOTOGRAPHIC DOCUMENTATION

Photographic documentation of an emission source, though useful in some aspects, often elicits a negative reaction from plant officials. Therefore, it is the opinion of the authors that in most cases the inspection can be conducted as effectively and usually more efficiently without the use of photographic documentation. There will be some cases, however, where an inspector or his agency will require photographs of control devices and/or associated equipment. This section details a suggested methodology for photographic documentation and includes some particulars on the legal aspects of taking photographs of/within the private areas of a company's premises.

Section 114 of the Clean Air Act may be interpreted to say that an inspector can take photographs of plant equipment to document his inspection. Like other proprietary information, EPA and other agencies can require that a source allow photographs to be of equipment that might reveal trade secrets. But, in almost all instances it is best to avoid photographing any sensitive areas and to limit photographs to only those which are absolutely necessary. For the purposes of inspections covered by this manual, the photographs will generally be of air pollution control equipment and any proprietary feature(s) in the backgound can be shielded.

Prior to taking any photographs the inspector should consult with the plant official (1) about plant policy concerning photographs and (2) to obtain consent. This is mostly conveniently accomplished during the pre-inspection interview. The inspector may offer to provide the official with duplicates of all photographs taken. As with other business data collected, during and/or at the conclusion of the inspection, the inspector should ascertain whether any of the photographs taken contain proprietary information and if the company wishes to designate any as confidential. Photographs taken employing a Polaroid-type instant camera are useful for inspections because they allow an immediate confidentiality review and the opportunity for the inspector to readily provide the company with duplicate shots.

The inspector must be exacting in his photographic techniques because all photographs must be authenticated and thoroughly identified if they are to be used as evidence in a court of law. When a photograph is introduced as evidence, the photographer, or on occasion another person familiar with the subject pictured, must affirm that the reproduction is a "fair representation" of what it is trying to show. To help ensure that this is true for his photographs, the inspector should take into account the type of lenses, filters and film he uses so as not to introduce any photographic artifacts. He should also endeavor to take photographs that include some indication of (1) the scale of the object being photographed, (2) its location in the scheme of the plant (if possible, without including proprietary information), and (3) the direction from which the photograph was taken.

Every photograph must be logged in the inspector's field notes. This log should include:

- Photo ID number,
- Type of film, lens, filters used,
- Date,
- Time,
- Location,
- Subject and purpose,
- Photographer's initials.

Polaroid-type instant photos should be immediately identified on the back after shooting with the corresponding photo ID number. Photographs which require developing and printing should be numbered as soon after these as possible. Photogaphs of a confidential nature must be developed by an authorized contractor.

12.7 REFERENCE

1. "Memorandum on Inspection Procedures (April 22, 1979)," from the Assistant Administrator for Enforcement to Regional Administrators, Surveillance and Analysis Division Directors, and Enforcement Division Directors, U.S. Environmental Protection Agency, published in The Environment Reporter, Bureau of National Affairs, Inc., Washington, D.C., 6-8-79, pp 9-23.