U.S. DEPARTMENT OF COMMERCE
National Technical Information Service

PB-284 716

State-of-the-Art Report Pesticide Disposal Research

Midwest Research Inst, Kansas City, Mo

Prepared for

Municipal Environmental Research Lab, Cincinnati, Ohio

Sep 78

United States
Environmental Protection
Agency

Laboratory
Cincinnati OH 45268

August 1978

Research and Development

EPA

State-of-the-Art Report: Pesticide Disposal Research

RESEARCH REPORTING SERIES

Research reports of the Office of Research and Development, U.S. Environmental Protection Agency, have been grouped into nine series. These nine broad categories were established to facilitate further development and application of environmental technology. Elimination of traditional grouping was consciously planned to foster technology transfer and a maximum interface in related fields. The nine series are:

1. Environmental Health Effects Research
2. Environmental Protection Technology
3. Ecological Research
4. Environmental Monitoring
5. Socioeconomic Environmental Studies
6. Scientific and Technical Assessment Reports (STAR)
7. Interagency Energy-Environment Research and Development
8. "Special" Reports
9. Miscellaneous Reports

This report has been assigned to the ENVIRONMENTAL PROTECTION TECHNOLOGY series. This series describes research performed to develop and demonstrate instrumentation, equipment, and methodology to repair or prevent environmental degradation from point and non-point sources of pollution. This work provides the new or improved technology required for the control and treatment of pollution sources to meet environmental quality standards.

This document is available to the public through the National Technical Information Service, Springfield, Virginia 22161.

PORTIONS OF THIS REPORT ARE NOT LEGIBLE.
HOWEVER, IT IS THE BEST REPRODUCTION
AVAILABLE FROM THE COPY SENT TO NTIS

TECHNICAL REPORT DATA
(Please read Instructions on the reverse before completing)

1. REPORT NO. EPA-600/2-78-183	2.	3. RECIPIENT'S ACCESSION NO. PB284716
4. TITLE AND SUBTITLE State-of-the-Art Report: Pesticide Disposal Research		5. REPORT DATE September 1978 (Issuing Date)
		6. PERFORMING ORGANIZATION CODE
7. AUTHOR(S) Ralph R. Wilkinson, Gary L. Kelso, Fred C. Hopkins		8. PERFORMING ORGANIZATION REPORT NO.
9. PERFORMING ORGANIZATION NAME AND ADDRESS Midwest Research Institute Kansas City, Missouri 64110		10. PROGRAM ELEMENT NO. SOS 4, Task 07 1DC618CGB C618A
		11. CONTRACT/GRANT NO. 68-03-2527
12. SPONSORING AGENCY NAME AND ADDRESS Municipal Environmental Research Lab.--Cin.,OH Office of Research & Development U.S. Environmental Protection Agency Cincinnati, Ohio 45268		13. TYPE OF REPORT AND PERIOD COVERED Symposium - September 6-7,78
		14. SPONSORING AGENCY CODE EPA/600/14

15. SUPPLEMENTARY NOTES

Donald A. Oberacker/Laura A. Arozarena Project Officers 513/684-7881

16. ABSTRACT

This research program was initiated with the overall objective of reviewing published and unpublished information on recent and on-going research and development on pesticide disposal or conversion methods. The methods were categorized according to four approaches: incineration; physical/chemical treatment; biological methods; and land disposal.

The information was evaluated in terms of the technical data base, economic cost and environmental impacts, and potential for disposal of finished formulations by consumers and for large-scale disposal. Several present and future "problematic" pesticides were identified. Future research needs were also identified.

17. KEY WORDS AND DOCUMENT ANALYSIS

a. DESCRIPTORS	b. IDENTIFIERS/OPEN ENDED TERMS	c. COSATI Field/Group
Pesticides Incinerators Waste Disposal Detoxification Degradation Waste Treatment	State-of-the-Art Pesticide Disposal Pesticide Disposal Research Needs	13B

18. DISTRIBUTION STATEMENT release to public	19. SECURITY CLASS (This Report) unclassified	21. NO. OF PAGES
	20. SECURITY CLASS (This page) unclassified	22. PRICE MF A01 PC A11

EPA Form 2220-1 (Rev. 4-77)

☆ U.S. GOVERNMENT PRINTING OFFICE: 1978-757-140/1341 Region No. 5-11

EPA-600/2-78-183
September 1978

STATE-OF-THE-ART-REPORT

PESTICIDE DISPOSAL RESEARCH

by

Ralph R. Wilkinson, Gary L. Kelso, and Fred C. Hopkins

Midwest Research Institute
Kansas City, Missouri 64110

Contract No. 68-03-2527

Project Officer

Donald A. Oberacker
Solid and Hazardous Waste Research Division
Municipal Environmental Research Laboratory
Cincinnati, Ohio 45268

MUNICIPAL ENVIRONMENTAL RESEARCH LABORATORY
OFFICE OF RESEARCH AND DEVELOPMENT
U.S. ENVIRONMENTAL PROTECTION AGENCY
CINCINNATI, OHIO 45268

DISCLAIMER

This report has been reviewed by the Municipal Environmental Research Laboratory, U.S. Environmental Protection Agency, and approved for publication. Approval does not signify that the contents necessarily reflect the views and policies of the U.S. Environmental Protection Agency, nor does mention of tradenames or commercial products constitute endorsement or recommendation for use.

FOREWORD

The Environmental Protection Agency was created because of increasing public and government concern about the dangers of pollution to the health and welfare of the American people. Noxious air, foul water, and spoiled land are tragic testimony to the deterioration of our natural environment. The complexity of that environment and the interplay between its components require a concentrated and integrated attack on the problem.

Research and development is that necessary first step in problem solution, and it involves defining the problem, measuring its impact, and searching for solutions. The Municipal Environmental Research Laboratory develops new and improved technology and systems for the prevention, treatment, and management of wastewater and solid and hazardous waste pollutant discharges from municipal and community sources, for the preservation and treatment of public drinking water supplies, and to minimize the adverse economic, social, health, and aesthetic effects of pollution. This publication is one of the products of that research: a most vital communication link between the researcher and the user community.

This study presents a comprehensive review of information on recent research and development on waste or excess pesticide disposal and conversion methods.

Francis T. Mayo
Director
Municipal Environmental
Research Laboratory

ABSTRACT

This research program was initiated with the overall objective of reviewing published and unpublished information on recent and on-going research and development on pesticide disposal or conversion methods. The methods were categorized according to four approaches: incineration; physical/chemical treatment; biological methods; and land disposal.

The information was evaluated in terms of the technical data base, economic cost and environmental impacts, and potential for disposal of finished formulations by consumers and for large-scale disposal. Several present and future "problematic" pesticides were identified. Future research needs were also identified.

Incineration is the most highly developed pesticide disposal technique. In well-designed systems which are maintained and operated properly, organic pesticides may be $\geq$ 99.9% destroyed at 1000°C and a 2-sec retention time with adequate air. Several types of research incinerators have accomplished this level of destruction.

Incineration is both capital- and energy-intensive. Potential environmental impacts are not completely known, although it is generally recognized these may be lessened through pollution control devices such as scrubber units. The residual ash may be toxic and must be properly disposed. The data base for pesticide incineration needs to be expanded to include more representative classes of pesticides.

Physical/chemical treatment to detoxify pesticides include several techniques which range from simple alkaline hydrolysis to a microwave plasma destruction technique that requires reduced pressures and sophisticated electronics. Four techniques appear amenable to large-scale applications: activated carbon adsorption; resin adsorption; hydrolysis; and wet air oxidation. Other methods require more extensive testing and development.

Two chemical conversion methods, chlorolysis and hydrodechlorination, are potentially useful pesticide disposal alternatives.

Physical/chemical treatment offers a range of capital- and energy-intensiveness. Potential environmental impacts are largely unknown at present. The data base for pesticide disposal or conversion needs to be expanded.

Biological methods are incompletely understood, although utilization of microorganisms, enzymes, and fluidized bed bioreactors are in a rapid state of development and show promise for future large-scale application. Increasing use of commercially available rotating-disc equipment may be expected.

Biological methods may offer relatively low to moderate requirements of capital investment and energy consumption. The potential environmental impacts are largely unknown. More information is needed on the residual toxicity of final biological effluents and sludges from the disposal of pesticides. Losses to the environment of pesticides and degradation products via volatilization, surface waters, and leaching are incompletely characterized.

Land disposal methods, including landfill, infiltration/evaporation ponds, encapsulation, etc., are widely used but are under-researched. Land disposal in the past has usually required relatively low investment, but this may not be true in the future as land values rise. The potential for environmental hazard due to land disposal of pesticides remains largely an unknown factor.

Future research needs for land disposal include: detoxification mechanisms and ultimate fate of pesticides in the soil, volatility, leaching, migration, and questions of residual toxicity of the final products. The data base needs to be expanded to include more representative classes of pesticides.

This report was submitted in fulfillment of Contract No. 68-03-2527 by Midwest Research Institute under sponsorship of the Environmental Protection Agency. Research was completed on November 15, 1977.

CONTENTS

Foreword iii
Abstract iv
Figures xi
Tables xiii
Metric Equivalents xv
Acknowledgements xvii
Summary xix

1. Introduction 1
    Objectives and Scope 1
    Study Approach 2
    Report Organization 2
2. Conclusions 4
    Incineration Methods 4
    Biological Disposal Methods 4
    Physical-Chemical Disposal and Conversion Methods 5
    Land Disposal Methods 5
3. Recommendations 6
    Incineration Methods 6
    Physical-Chemical Disposal and Conversion Methods 6
    Biological Disposal Methods 7
    Land Disposal Methods 7
4. Incineration Methods 8
    Introduction 8
    Incineration Criteria 9
    Types of Incinerators 9
        Multiple-Hearth Incinerators 10
        Rotary Kiln Incinerators 11
        Fluidized Bed Incinerators 15
        Liquid Injection Incinerators 18
        Multiple-Chamber Incinerators 23
    Research and Development 26
        Research and Development Programs 26
        Results 40
    Potential Impacts 45
        Potential Environmental Impacts 45
        Potential Economic Impacts 53
    Future Research Needs 54
    References--Section 4 57

CONTENTS (Continued)

5. Biological Methods 60
Introduction 60
Traditional Biological Disposal Methods 61
Research and Development 62
Laboratory Research 62
Promising Commercial Technologies 70
Potential Impacts 74
Potential Environmental Impacts 74
Potential Economic Impacts 76
Future Research Needs 77
References--Section 5 79
6. Physical and Chemical Disposal Methods 82
Introduction 82
Research and Development 82
Gas Phase Disposal Methods 83
Microwave Plasma Destruction 83
Photolysis 89
Liquid Phase Disposal Methods 92
Activated Carbon and Resin Adsorption Processes . . . 92
Hydrolysis and Other Simple Chemical Treatment Processes 93
Molten Salt Processes 105
Ozonation Methods 117
Wet Air Oxidation (Zimmerman Process) 124
Liquid-Solid Phase Disposal Process: Chemical Fixation . . 127
Catalytic Liquid Phase Disposal Processes 130
Catalytic Dechlorination Utilizing Nickel Boride . . . 131
Reductive Degradation Utilizing Metallic Couples . . . 133
Potential Impacts 135
Potential Environmental Impacts 135
Potential Economic Impacts 137
Future Research Needs 146
Microwave Plasma Technology 146
Photolysis 146
Activated Carbon and Resin Adsorption 147
Hydrolysis 147
Molten Salt Baths 148
Ozone/UV Irradiation 148
Sonocatalysis and Catalytic Ozonation 148
Wet Air Oxidation 149
Chemical Fixation 149
Catalytic Dechlorination Utilizing Nickel Boride . . . 149
Reductive Degradation Utilizing Metallic Couples . . . 149
Synopsis 150
References--Section 6 151

CONTENTS (Continued)

7. Land Disposal Methods 157
Introduction 157
Methods of Land Disposal 157
Current Management of Pesticide Wastes in Disposal Sites . . 158
Research and Development 160
Pesticide Leachate 161
Soil Incorporation 166
Potential Impacts 170
Potential Environmental Impacts 170
Potential Economic Impacts 172
Future Research Needs 172
References--Section 7 174
8. Alternatives to Pesticide Disposal 177
Introduction 177
Alternative Methods 177
Selected Chemical Conversion Methods 178
Chlorolysis 178
Catalytic Hydrodechlorination 181
Potential Impacts 185
Potential Environmental Impacts 185
Potential Economic Impacts 186
Future Research Needs 188
References--Section 8 190
9. Discussion 191
Introduction 191
Overview of Pesticide Disposal and Conversion Methods . . . 191
Evaluation of Pesticide Disposal and Conversion Methods 193
Technical Information Gaps 195
Recently Identified Problem Pesticides 195
Selected Disposal Procedures 197
Disposal of Small Quantities of Pesticides 197
Disposal of Large Quantities of Pesticides 200
New Directions for Disposal Research and Development 201
Small Quantities of Pesticides 201
Disposal of Large Quantities of Pesticides 205
References--Section 9 208

CONTENTS (Continued)

Appendices

A. Recent Contracts for Hazardous Waste Materials Disposal Research 209
B. Pesticides and Pesticide Containers: Regulations for Acceptance and Recommended Procedures for Disposal and Storage 215
C. Site Visits Related to Hazardous and Toxic Material Disposal 222

FIGURES

Number		Page
1	Multiple hearth incineration system.	12
2	Municipal rotary kiln incineration facility.	13
3	Typical major industrial rotary kiln incineration facility .	14
4	Portable rotary kiln incineration units.	16
5	Schematic of a fluidized bed combustor	17
6	Horizontally fired liquid waste incineration system.	20
7	Typical vertically fired liquid waste incinerator.	21
8	Vortex liquid waste incinerators	22
9	Retort multiple chamber incinerator.	24
10	In-line multiple chamber incinerator	25
11	Conceptual drawing of a mobile metal pesticide container disposal unit.	34
12	Artistic rendering of mobile rotary kiln for disposal of hazardous wastes	36
13	Internal view of pesticide micropit.	65
14	Iowa State University Horticulture Station Disposal Pits . .	66
15	Schematic of tapered fluidized-bed bioreactor system	68
16	The Bio-Surf™ process.	71
17	Schematic of microwave plasma system	84

FIGURES (Continued)

Number		Page
18	Quartz mesh basket within microwave plasma reactor.	85
19	Examples of pesticide photolytic reactions.	91
20	Schematic of molten salt combustion process	107
21	Schematic of the molten salt pilot plant.	108
22	Schematic flow diagram for recycling carbonate melt	110
23	Mobile molten salt waste disposal system.	114
24	APS molten salt incinerator	116
25	Schematic for ozonation/UV irradiation apparatus.	119
26	Schematic diagram of potential reaction of malathion and ozone/UV irradiation.	120
27	Schematic flow diagram of wet air oxidation	125
28	Chemfix process schematic	128
29	Schematic flow diagram for reduction degradation process. . .	134
30	Schematic diagram of the Hoechst AG chlorolysis process . . .	179
31	Schematic flow diagram for hydrodechlorination process. . . .	182
32	Experimental reaction process for three chlorinated hazardous materials	184

TABLES

Number		Page
1	Organizations that have Conducted Research on Pesticide Disposal by Incineration	41
2	Temperatures of Complete Combustion of Pesticides Determined in Laboratory Experiments	42
3	Operating Parameters of Incineration Research Tests of Individual Pesticides	46
4	Summary of Herbicide Orange Biodegradation Laboratory Results	63
5	Biodegradation Ability of Phenobac™ at 30°C (86°F)	73
6	Mobay Facility Recovery with Phenobac™	75
7	Summary of Microwave Oxygen-Plasma Reactions	87
8	Chemical Degradation Results for Selected Pesticides	94
9	Successful Chemical Degradation of Four Organophosphorus Insecticides	96
10	Half-Lives of Various Pesticides Under Alkaline Conditions	97
11	Summary of TRW Alternate Options for Disposal of Pesticide Wastes	98
12	Summary of MRI Disposal Procedures and Eligible Pesticides	101
13	Chemical Methods for Disposal of Selected Pesticides	104
14	Hazardous Chemicals and Wastes Treated by Molten Salt Bath	111
15	Summary of Results of Molten Salt Bath Combustion Tests on Chemicals	112

TABLES (Continued)

Number		Page
16	Typical Results of Molten Salt Bath Combustion Tests on Pesticides	113
17	Typical Results of Ozone/UV Irradiation of Pesticides	122
18	Wet Air Oxidation Pesticidal Waste Applications	126
19	Electrical and Carrier Gas Costs for Plasma Reactions in Laboratory Reactor	139
20	Total Process Costs and Net Profit for Microwave Plasma Destruction of PMA	140
21	Operating Characteristics and Economic Costs Associated with Herbicide Removal from Wastewater by Carbon Adsorption	142
22	Economic Cost Comparisons for Treatment of Chlorinated Pesticides Wastewater by Activated Carbon and Resin Adsorbent	143
23	Estimated Costs of Wet Air Oxidation of AMIBEN® Waste	145
24	Operating and Financial Data for a Chlorolysis Facility Processing 25,000 MT/YR of Organochlorine Waste	187
25	Synopsis of Pesticide Disposal and Conversion Research Methods	192
26	Technical, Environmental, and Economic Comparison of Disposal or Conversion Procedures for Pesticides	194
27	Recently Identified Problem Pesticides	196
28	Recommended Disposal Procedures for Small Quantities of Unused Pesticides	199
29	Estimated Pesticide Production in Quantities Larger than 1,000 Metric Tons per Year	204

METRIC EQUIVALENTS

Btu x 1,055	= Joule (J)
($^{\circ}$F - 32) x 0.555	= Degree celsius ($^{\circ}$C)
ft x 0.3048	= Meter (m)
ft^2 x 0.0929	= Square meter (m^2)
gal. x 0.00379	= Cubic meter (m^3)
lb x 0.454	= Kilogram (kg)
ton (short) x 0.907	= Metric ton (MT)

ACKNOWLEDGEMENTS

This report presents the results of a project performed by Midwest Research Institute under Contract No. 68-03-2527, MRI Project No. 4365-L. Mr. Donald A. Oberacker has been the project officer for the Environmental Protection Agency.

The project was conducted from February 15 to November 15, 1977, by Dr. Ralph R. Wilkinson, Associate Chemist, who served as project leader, Mr. Gary L. Kelso, Associate Chemical Engineer, and Mr. Fred C. Hopkins, Junior Environmental Scientist, under the supervision of Dr. Edward W. Lawless, Head, Technology Assessment Section. Dr. Alfred F. Meiners, Principal Chemist, and Mr. Thomas L. Ferguson, Principal Chemical Engineer, provided technical and editorial consultation.

Midwest Research Institute expresses its sincere appreciation to the many individuals, companies, institutions, and agencies who provided technical information for this report. In particular, we wish to thank the following individuals and companies for the privilege of on-site visits to meet with technical personnel:

* Mr. Robert Babbitt, Manager Processing Engineering, The Marquardt Company, Van Nuys, California

* Dr. Lionel Bailin, Research Chemist, Lockheed Palo Alto Research Laboratory, Palo Alto, California

* Dr. Charles Hall, Project Leader, Iowa State University, Horticultural Research Station, Ames, Iowa

* Mr. Charles Hancher, Group Leader, Bioprocess Engineering, Oak Ridge National Laboratory, Oak Ridge, Tennessee

* Mr. Sidney Howard, Marketing Manager, Envirotech Corporation, EIMCO BSP Division, Belmont, California

* Mr. Dale Moody, Program Manager, Combustion Power Company, Menlo Park, California

* Dr. Tan Phung, Research Engineer, SCS Engineers, Inc., Long Beach, California

* Mr. Ray Tenzer, Marketing Manager, Energy Systems, MB Associates, Inc., San Ramon, California

* Dr. Sam Yosim, Research Chemist, Atomics International Division, Rockwell International, Canoga Park, California

SUMMARY

The primary objectives of this project were to collect and review information on recent research and development on waste or excess pesticide disposal and conversion methods, with emphasis on high temperature incineration, biological methods, physical-chemical treatment, and land disposal. Potential environmental and economic cost impacts, problems of field disposal of finished pesticide formulations, and present and potential future "problem" pesticides were also examined. The identification of those disposal methods that are most nearly ready for practical application was a major goal. Based on this information, a series of future research needs and new directions for pesticide disposal R&D were developed.

Information was gathered through an in-depth review of the published literature, personal contacts by telephone and letter with knowledgeable sources, and nine site visits to facilities actively engaged in research on hazardous waste disposal. The results of this study are summarized in the following paragraphs.

INCINERATION METHODS

High temperature incineration is the most highly developed disposal method for pesticides as well as many other hazardous waste materials. It dependably yields predictable results if specified operating conditions are maintained. Although several classes of pesticides have not been studied, incineration may provide a complete solution to disposing of a wide range of pure pesticide active ingredients (AI) as well as finished formulations and mixtures of pesticides and formulations.

The economics of incineration may be unfavorable since it is a capital- and energy-intensive method. It is practical and economical only for large-scale use, i.e., "tonnage," pesticide disposal operations. It is not well suited to the small-batch operations characteristic of most consumer and field disposal problems.

A potential for environmental insult exists during incineration of waste if noxious gaseous effluents are not monitored and controlled through use of scrubber units, baghouses, etc.; and any scrubber water must be disposed of properly. Incineration of organometallic pesticides is not recommended since

volatile toxic metals, metal chlorides, oxides, etc., may be formed, and particulates may be difficult to remove from the gaseous emissions.

The major conclusions and recommendations on pesticide incineration are:

* The data base for pesticide incineration has been developed largely with experimental incinerators. This fact limits extrapolation of the findings to full-scale conditions. More pilot-scale demonstrations should be conducted utilizing commercial units so that the results may be directly applicable to solving field disposal problems.

* Incinerator operating conditions for a 2-sec retention time at or near 1000°C with adequate excess air appear to be sufficient for ≥ 99.9% destruction of the organic pesticides that have been studied to date.

* The data base for pesticide incineration should be expanded to include more representative classes of pesticides, particularly anilides, ureas, uracils, nitrated hydrocarbons, botanicals, and microbiological pesticides.

* Potential environmental and economic cost impacts have not been completely defined as of this time (May 1978).

BIOLOGICAL METHODS

Biological methods utilizing microorganisms or enzymes are in a rapid state of development at the research level and show promise for future application, although many classes of pesticides have not been studied yet. Greater use of commercially available rotating-disc apparatus (an improvement over conventional activated sludges processes) may be expected in the future. Innovations in biological methods may include the use of fluidized bed bioreactors and mutant bacterial strains having above normal tolerance for toxic chemicals and other adverse conditions.

The major conclusions and recommendations on biological methods are:

* Sufficient data have not been developed on the extent of applicability of biological methods for pesticide disposal.

* Biological treatment studies should be expanded to the pilot plant and demonstration levels, to better establish the utility of these methods in pesticide disposal.

* More information is needed on the residual toxicity of final biological effluents and sludges from the disposal of various classes of pesticides.

* Studies to determine the amounts of pesticides or pesticide degradation products that are lost to the environment via volatilization, surface water, and groundwater contamination during biological treatment should be carried out.

* Potential environmental and economic cost impacts have not been adequately determined and should be studied.

PHYSICAL-CHEMICAL DISPOSAL AND CONVERSION METHODS

Several physical-chemical disposal and conversion methods are perceived to have potential for large-scale application including: adsorption on activated carbon and resin; chlorolysis; microwave plasma destruction; molten salt baths; hydrolysis; reductive degradation with metallic couples; and wet air oxidation. All of these methods have been demonstrated at the research level.

The major conclusions and recommendations on physical-chemical disposal and conversion methods for pesticide disposal are:

* The development of many methods has progressed only as far as the bench or pilot plant levels, and several representative classes of pesticides must still be examined by the various physical-chemical treatment methods.

* At least four methods (i.e., activated carbon absorption, resin adsorption, hydrolysis, and wet air oxidation) are at or near the point of practical demonstration and should be given full tests.

* Three other methods (microwave plasma destruction, molten salt baths, and ozone/UV irradiation) should be further investigated and developed to reach the demonstration level.

* Two chemical conversion methods (chlorolysis and hydrodechlorination) are potentially useful and warrant further study.

* Potential environmental and economic cost impacts have not been adequately determined and should be studied.

LAND DISPOSAL METHODS

Land disposal methods, including landfill operations, infiltration/evaporation ponds, encapsulation, etc., are often employed, but underresearched, techniques.

The major conclusions and recommendations on land disposal methods are:

* The detoxification mechanisms of pesticides and their ultimate fate are incompletely understood.

* Data deficiencies preclude evaluation of the efficacy and environmental consequences of land disposal procedures.

* More information is needed on pesticide volatility, leaching, migration, the nature of the degradation products, and potential residual toxicity.

* Studies to monitor losses of pesticides and degradation products from active disposal sites, including examination of air, surface and groundwater, should be expanded.

* The capacity of various types of soils to absorb, retain, and degrade pesticides has not been adequately described and quantified.

* The potential environmental and economic cost impacts have not been adequately determined and must be studied.

PROBLEMATIC PESTICIDES

The report identifies 55 problematic pesticides which may be considered as potential or future waste problems because of human health or ecological concern or specific, widely reported incidents. Of these 55 problematic pesticides, 23 have been researched for potential disposal methods which can be made environmentally acceptable.

DEMONSTRATED FIELD DISPOSAL METHODS

The report focuses both upon disposal methods for small quantities of pesticides (< 25 kg or < 20 liters), suitable for use by the layperson, and upon disposal methods more appropriate to the field disposal or conversion of "tonnage" quantities of unwanted pesticides. Those disposal methods potentially applicable to the layperson are noted, and demonstrations of their application to various pesticide classes are described. For the disposal of "tonnage" quantities of unwanted pesticide, incineration is cited as a practical, demonstrated procedure. Other biological and physical-chemical treatments are not yet sufficiently developed for large-scale utilization. Landfill remains a limited method to date, although this procedure is practiced in Class 1 disposal sites in various parts of the country, e.g., California. In general, field disposal research and development has focused largely on the persistent chlorinated hydrocarbons, and much work remains to be done to develop data for other classes of pesticides.

NEW DIRECTIONS FOR DISPOSAL RESEARCH AND DEVELOPMENT

Based on information contained within the body of the report, new directions for pesticide field disposal research and development are suggested. For disposal of small quantities of pesticides (< 2 kg or < 20 liters) a limited number of alkaline hydrolytic degradation studies are proposed. For disposal of large or "tonnage" quantities of pesticides new research and development may focus on incineration at sea, mobile disposal units, and fixed disposal units including commercial incinerators.

SECTION 1

INTRODUCTION

The problems associated with unwanted pesticides and used pesticide containers have resulted in the initiation of numerous recent or ongoing research projects. These projects are conducted by various research organizations under the sponsorship of government agencies, industrial organizations, and private institutions.

OBJECTIVES AND SCOPE

This program was initiated in order to develop a comprehensive state-of-the-art review of pesticide disposal research. Primary objectives in the development of this document were to:

* Conduct a detailed review of thermal behavior of pesticides and reduce available information into a concise and usable format.

* Conduct a detailed review and evaluation of bioconversion processes for pesticides.

* Describe alternatives to disposal via reprocessing, chemical treatment, and other means.

Secondary objectives were to:

* Identify the present and potential future problem areas, with emphasis on the consumer sector.

* Identify research and development needs for pesticide disposal.

* Characterize the environmental impacts for various disposal methods, with emphasis on incineration.

Methodologies used in the development of this review included a computerized search of current research in progress; contact with pesticide disposal research workers and company representatives; contact with various governmental groups and agencies; and an examination of recent technical literature on pesticide disposal including governmental documents. Also included

were nine on-site visits to California, Iowa, and Tennessee to obtain first-hand information on the state of the art of pesticide disposal research.

STUDY APPROACH

The report emphasizes pesticide disposal research and includes sections on incineration, biological techniques, physical/chemical procedures, and land disposal. Chemical conversion and recovery procedures are considered in a separate section.

The approach used to categorize research on field disposal methods for cancelled, restricted, contaminated, or otherwise unwanted pesticides was to consider each chemical class, e.g., organophosphorus compounds, chlorinated hydrocarbons, organometallics, etc., as being potentially amenable to one or more of the above conversion, detoxification, or disposal procedures. This approach permits the information developed in this report to be summarized in matrix form, which presents conversion and disposal research methods for each chemical class of pesticides. The matrix identifies technology gaps and duplicate studies.

The diverse nature of the pesticide industry and its marketing strategy makes difficult the task of assessing field disposal techniques for specific active ingredients (AI's) and their finished formulations. For example, there were some 24,000 different formulations available from 139 manufacturers and 5,660 formulators as of February 1976. Over 50,000 different products are said to have been registered by the Environmental Protection Agency (EPA). Each company that markets a given formulation of finished pesticide must have a registered label for it. Over 3,500 companies hold federal registrations for one or more products. In addition, many pesticides are registered for interstate sale only; an estimated 2,000 pesticidal products are registered in California alone.

REPORT ORGANIZATION

The information gathered during this study is organized into a format which will assist governmental agencies in the assessment of various pesticide disposal options which may be viable in the near future or are approaching the demonstration phase.

This report is organized into nine sections and three appendices. The Summary, Conclusion, and Recommendations sections are placed at the front of the report to allow the reader an immediate overview. Ongoing research activities are discussed in the sections on incineration, biological, physical-chemical, land disposal, and alternative disposal technologies. Section 9, the last section of the report, presents a discussion of various disposal

research options, information gaps, and potential disposal problems. Also included are discussions of disposal methods and safety precautions for the layperson disposing of small quantities. The section closes with a discussion of new research and development directions available to the EPA.

SECTION 2

CONCLUSIONS

This section presents conclusions regarding pesticide disposal or conversion by incineration, biological methods, physical-chemical treatment, and land disposal.

INCINERATION METHODS

1. The data base for pesticide incineration has been developed predominantly from experimental research-type incinerators. This fact limits extrapolation of the findings to full-scale conditions.

2. Incinerator operating conditions and characteristics are dependent on the nature of the destruction unit and the specific pesticide being destroyed. In general, a 2-sec retention time at or near 1000°C with adequate excess air appears to be sufficient for ≥ 99.99% destruction of the organic pesticides studied to date. However, the chemical and toxicological nature of the effluents (gas, particulates, solid residue) and the scrubber water have not been adequately characterized.

3. Potential environmental and economic cost impacts have not been adequately addressed in the literature.

BIOLOGICAL DISPOSAL METHODS

1. Sufficient data have not been developed on the use of biological methods for pesticide disposal. Only 14 pesticides have been evaluated for potential biological disposal, and these were not representative of the major classes of pesticides.

2. Significant information gaps exist in the present data base, including information regarding volatile losses of pesticides and residual toxicity of final biological effluents and sludges.

3. More research and development are needed at the pilot plant level. In particular, demonstrations of the use of mutant bacterial strains and fluidized bed bioreactors to detoxify a number of hazardous chemicals, including pesticides in process wastewater, are needed.

4. Potential environmental and economic cost impacts have not been adequately addressed.

PHYSICAL-CHEMICAL DISPOSAL AND CONVERSION METHODS

1. Sufficient data are not available on pesticides which are representative of the various classes for which many of these methods are potentially applicable.

2. The development of many of the disposal methods discussed in the report has progressed only as far as the bench or pilot plant level. However, at least four methods (activated carbon, resin adsorption, hydrolysis, and wet air oxidation) are at or near the point of practical demonstration.

3. Two chemical conversion methods, chlorolysis and hydrodechlorination, are potentially useful pesticide disposal alternatives.

4. Potential environmental and economic cost impacts have not been adequately addressed.

LAND DISPOSAL METHODS

1. Land disposal procedures for hazardous chemicals, including pesticides, have been widely practiced because of economic advantages over alternate methods. However, the detoxification mechanisms of pesticides, as well as the ultimate fate in land disposal processes, are incompletely understood at present. Thus, complete assessment of the environmental consequences of land disposal is not possible at this time.

2. Data deficiencies preclude evaluation of the efficacy and environmental consequences of biological disposal methods. Specifically, more information is needed regarding pesticide volatility, leaching, migration, the nature of the degradation products, and potential residual toxicity. The capacity of various types of soils to adsorb, retain, and degrade pesticides has not been adequately described and quantified.

SECTION 3

RECOMMENDATIONS

The following recommendations are presented on methods for the disposal or conversion of unwanted pesticides and are listed in order of decreasing potential for full-scale application to the detoxification of pesticides.

INCINERATION METHODS

1. The data base for pesticide incineration should be expanded to include more representative classes of pesticides (particularly anilides, ureas, uracils, nitrated hydrocarbons, botanicals, and microbiological pesticides). More full-scale demonstrations of pesticide incineration should be conducted utilizing commercial facilities so that the results may be directly applicable to solving field disposal problems.

2. Pollution control devices for specific pollutants should be tested. One of the pieces of information needed to assist in selection of these devices is information on particle size distribution for solids emitted.

3. The specific combustion products emitted by pesticide incineration and their potential effects on the environment should be characterized.

4. Capital and operating costs of pesticide incineration (including land values, waste handling systems, and pollution control equipment) should be determined.

PHYSICAL-CHEMICAL DISPOSAL AND CONVERSION METHODS

1. Physical-chemical disposal and conversion methods (particularly microwave plasma detoxification, chlorolysis, molten salt baths, and wet air oxidation) should be further developed to pilot plant or demonstration levels.

2. Research and development activities on other physical-chemical methods (particularly activated carbon and resin adsorption, hydrolysis, and wet air oxidation) should continue.

3. Potential environmental and economic cost impacts for physical-chemical disposal and conversion methods should be determined.

BIOLOGICAL DISPOSAL METHODS

1. Studies to monitor both pesticide losses and pesticide degradation product losses via volatilization and surface or groundwater contamination from traditional biological treatment processes (e.g., activated sludge, trickling filter, etc.) should be expanded.

2. Biological treatment should be developed to the pilot plant and demonstration levels to better establish the utility of biological methods in pesticide disposal, including:

* Conventional waste treatment methods.

* Immobilized enzymes, mutant bacterial strains, and fluidized bed bioreactors.

* Disposal pits.

3. Potential environmental and economic cost impacts for biological disposal methods for pesticides should be determined.

LAND DISPOSAL METHODS

1. Studies to monitor losses of pesticides and degradation products from active disposal sites (including examination of air, surface and groundwaters) should be expanded.

2. Studies to determine the extent of degradation and degradation rates of land-disposed pesticides should be expanded.

3. Potential environmental and economic cost impacts for land disposal of pesticides should be determined.

SECTION 4

INCINERATION METHODS

INTRODUCTION

Among the various alternatives available for the disposal of pesticides, incineration has been held to be one of the more promising methods. The advantages of incineration as a pesticide-disposal procedure are that incineration technology is relatively well developed; systems are stable and dependable; large volumes of pesticides can be handled properly; incinerators are versatile; pollution emissions for incinerators are controllable; there is a potential for energy recovery from incinerator operations; and volume reduction of pesticide wastes is achieved. Offsetting some of the advantages of incinerators are that incinerators are expensive; they create an ash which requires disposal; and they can emit toxic gases, vapors, and particulates, if not properly controlled.

The EPA (1974) has defined a pesticide incinerator as an installation capable of controlled combustion of pesticides at either a temperature of 1000°C (1832°F) and a 2-sec retention or dwell time in the combustion zone, or some lower temperature and sufficient dwell time to assure complete conversion of the specific pesticide to inorganic gases and a solid ash residue. While it is generally true that most pesticides can be destroyed by incineration at a temperature of 1000°C (1832°F) and a residence time of 2 sec, it is difficult to estimate what the proper operating conditions should be for a specific pesticide in a given incinerator. There are about 550 different pesticide AI's and about 24,000 different formulations on the market (Kelso et al., 1976), and the decomposition temperatures of these compounds and their related decomposition products vary widely. Research and development studies by a number of organizations have been performed on the incineration of selected pesticides. As a result of this research the efficiencies of various types of incinerators for destroying specific pesticides have been determined under a range of operating conditions.

This section of the report presents a discussion of the results of these research and development programs. Included are summaries of the criteria for incineration operations; the types of incinerators available; research and development programs conducted on pesticide disposal by incineration and the

results of those programs; a discussion of environmental and economic impacts; and a discussion of future research needs.

INCINERATION CRITERIA

Proper incinerator operating conditions are required to achieve a high degree of destruction of pesticides and related compounds. An incinerator must be properly designed to provide adequate residence time in the combustion chamber, adequate mixing (turbulence) of the waste and combustion air, an adequate temperature to ensure complete destruction of organic compounds, and adequate oxygen in the combustion chamber for complete combustion. These four criteria--residence time, turbulence, temperature, and combustion air--must be considered together to ensure efficient and complete destruction of a pesticide by incineration.

In addition to using the proper operating conditions to destroy the pesticide, the incineration system must be equipped with the proper emission controls to ensure that toxic gases and particulates do not escape into the environment. The ash (which may contain hazardous substances) must be properly disposed. Wet collection equipment is available for the removal of gaseous pollutants and includes scrubbers of several types: venturi, plate, packed tower, fiber bed, spray tower, centrifugal, moving bed, wet cyclone, self-induced spray, and jet. Dry collection equipment is available for the removal of particulate pollutants and includes settling chambers, baffle chambers, skimming chambers, dry cyclones, impingement collectors, electrostatic precipitators, and fabric filters. The incinerator ash, scrubber water, and particulate collection can then be landfilled, chemically treated, or otherwise processed for disposal.

Thus, when considering the efficiency and effectiveness of an incineration operation to dispose of pesticides, the important criteria are: temperature, residence time, turbulence, and combustion air in the incinerator; combustibility of the pesticide and the feed rate; pollution control equipment to treat the exhaust gases; and disposal of the incinerator ash and the substances collected in the pollution abatement equipment. Research conducted on pesticide disposal by incineration must consider these criteria.

TYPES OF INCINERATORS

Ottinger et al (1973) and Scurlock et al. (1975) have presented a detailed discussion of the types of incinerators available for hazardous waste disposal. The technical information given in this section is primarily taken from these two reports unless the text is referenced otherwise.

Incinerator units may be classified into 10 basic types: open pit incinerators, open burning, stack flares, gas combustors, catalytic combustors,

multiple hearth incinerators, rotary kiln incinerators, fluidized bed incinerators, liquid injection incinerators, and multiple chamber incinerators. However, only the latter five types are suitable for the disposal of pesticides. Open pit incinerators, open burning, and stack flares are not amenable to secondary pollution control operations and allow the uncontrolled entry of the products of combustion into the environment. Gas combustors and catalytic combustors are applicable to gaseous wastes only, and pesticides are commonly marketed in either the liquid or solid state. Molten salt bath systems are covered in Section 6 (Physical and Chemical Methods). These systems are not incinerators or furnaces in the normal sense, e.g., at least one type does not operate with a flame.

Multiple hearth, rotary kiln, fluidized bed, liquid injection, and multiple chamber incinerators represent proven technology in waste disposal techniques. The application of the first three types to pesticide disposal should be useful since they are all versatile units capable of incinerating a wide variety of solid, liquid, and gaseous combustible wastes. In addition, each unit can be equipped with appropriate emission control systems and has the necessary operating conditions to combust pesticides. Multiple hearths, which reach temperatures of about 1000°C (1830°F), retain solids for up to several hours. Rotary kilns reach temperatures of 1650°C (3000°F) and may retain solid waste for several seconds to several hours. Fluidized beds reach operating temperatures of 870°C (1600°F) and have variable retention times. The liquid injection incinerator is limited to liquids, and this type of unit reaches temperatures of 1650°C (3000°F) with residence times of up to 1 sec for gases. The conventional multiple chamber incinerator is typically utilized for solid wastes and normally operates at a temperature of about 540°C (1000°F), too low for most pesticides.

Each of the five types of incinerators that may be used to dispose of pesticides is described briefly below.

Multiple-Hearth Incinerators

This type of incinerator (commonly called a Herreshoff furnace) was originally developed to incinerate sewage plant sludges. The versatility of multiple-hearth incinerators has allowed operators to process not only sludges but other combustible tars, liquids, gases, and solids. Today a wide variety of industrial and municipal wastes are disposed of by incineration in multiple-hearth incinerators.

The multiple-hearth furnace consists of a refractory-lined circular steel shell with refractory hearths stacked vertically. Solid wastes are fed through the furnace roof and are moved across the top hearth with horizontal plows. The wastes fall through the top hearth drop holes and then through holes in each successive hearth until they reach the furnace floor as ash. Residence

time may be up to several hours for some solids. Liquid and gaseous wastes are injected into the furnace through auxiliary burner nozzles, and greases and tars are injected through side ports. Waste flow is countercurrent to the flow of off gases. A typical multiple-hearth incinerator system is shown in Figure 1.

The furnace has three operating zones: the top hearths operate at temperatures between 310 to 540°C (600 to 1000°F) and dry the sludge feed to about 48% moisture; the incineration/deodorizing zone operates at temperatures from 760 to 980°C (1400 to 1800°F); and the cooling zone, where hot ash is cooled by giving up heat to incoming combustion air, operates at temperatures from 200 to 320°C (400 to 600°F).

Combustion air and combustion products flow vertically through the furnace and exit at 260 to 540°C (500 to 1000°F). Exhaust gases normally pass through an emission control system prior to discharge.

The ash remaining in the bottom hearth, depending on the material being incinerated, is about 10% of the furnace feed and normally contains less than 1% combustible material. It is removed mechanically, hydraulically, or pneumatically, and is normally disposed of in a landfill.

Rotary Kiln Incinerators

This type of incinerator is quite versatile and has been used in both municipal and industrial installations. Municipal rotary kilns are generally designed to incinerate large volumes of solid refuse and serve mainly as an efficient mixer of air and wastes ignited on traveling grates prior to reaching the kiln. Industrial rotary kilns are usually designed to incinerate both liquid and solid wastes. In the past, rotary kilns have been used to incinerate combustible solids (including explosives), liquids (including chemical warfare agents), gases, tars, and sludges. Figure 2 shows a typical municipal rotary kiln incineration facility, and Figure 3 shows a typical major industrial rotary kiln facility which is operated by Dow Chemical Company at its Midland, Michigan, plant.

A rotary kiln used in large installations is a cylindrical, horizontal, refractory-lined shell which is positioned on a slight incline. Solid waste is fed into the upper end of the kiln, and liquid waste is fired horizontally into the kiln. The kiln rotates with peripheral speed of rotation in the range of 0.3 to 1.5 m (1 to 5 ft) per minute (typically 12 revolutions per hour) and mixes the waste with combustion air as the waste passes through the kiln. The length-to-diameter ratio of these kilns usually varies from 2 to 10. Typically these units are 9 m (30 ft) long and 3 m (10 ft) in internal diameter (ID). The combustion temperatures normally range from 870 to 1650°C (1600 to 3000°F), and residence times vary from a few seconds to several hours, depending upon the type of waste.

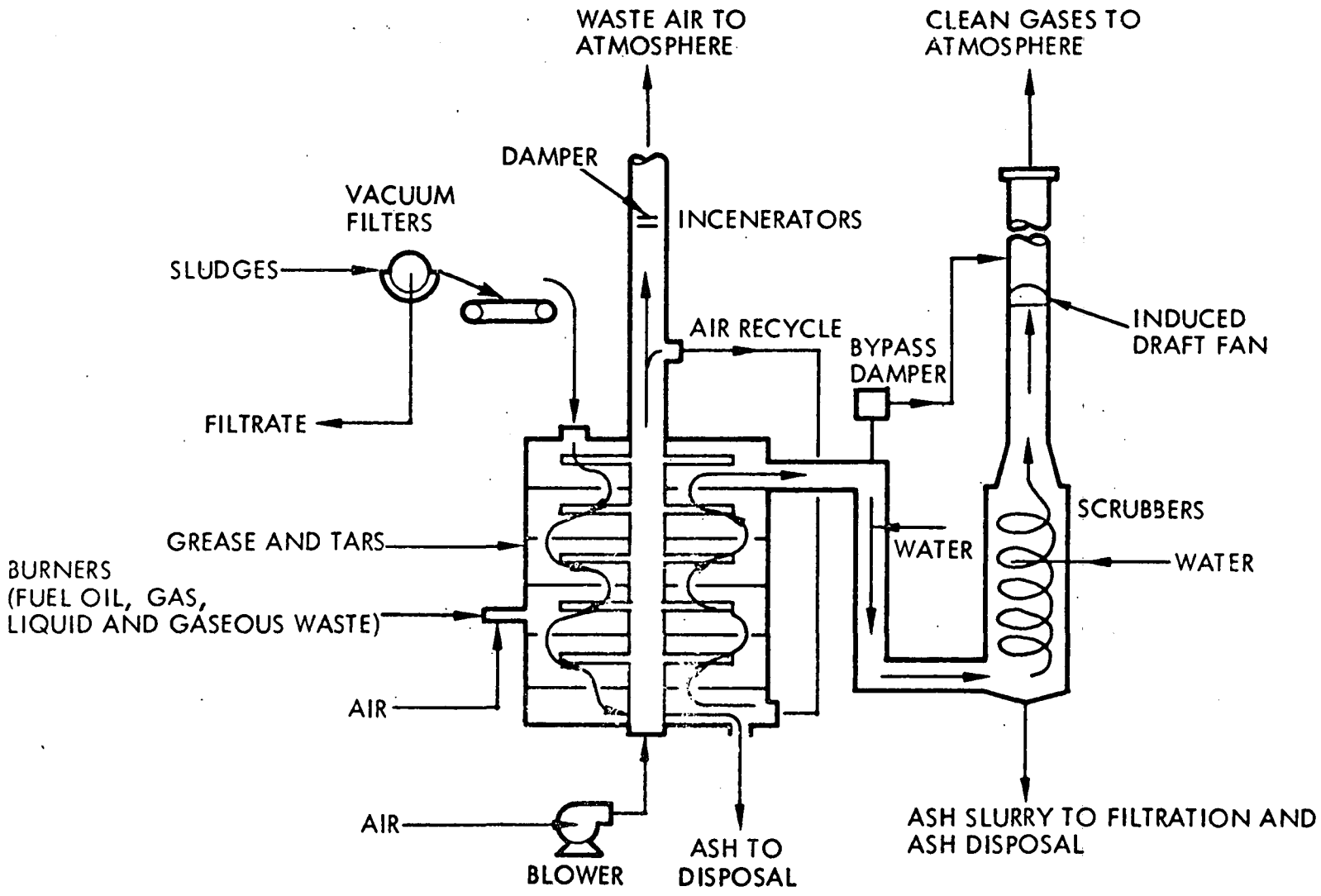

Sources: Ottinger et al. (1973) and Scurlock et al. (1975).

Figure 1. Multiple hearth incineration system.

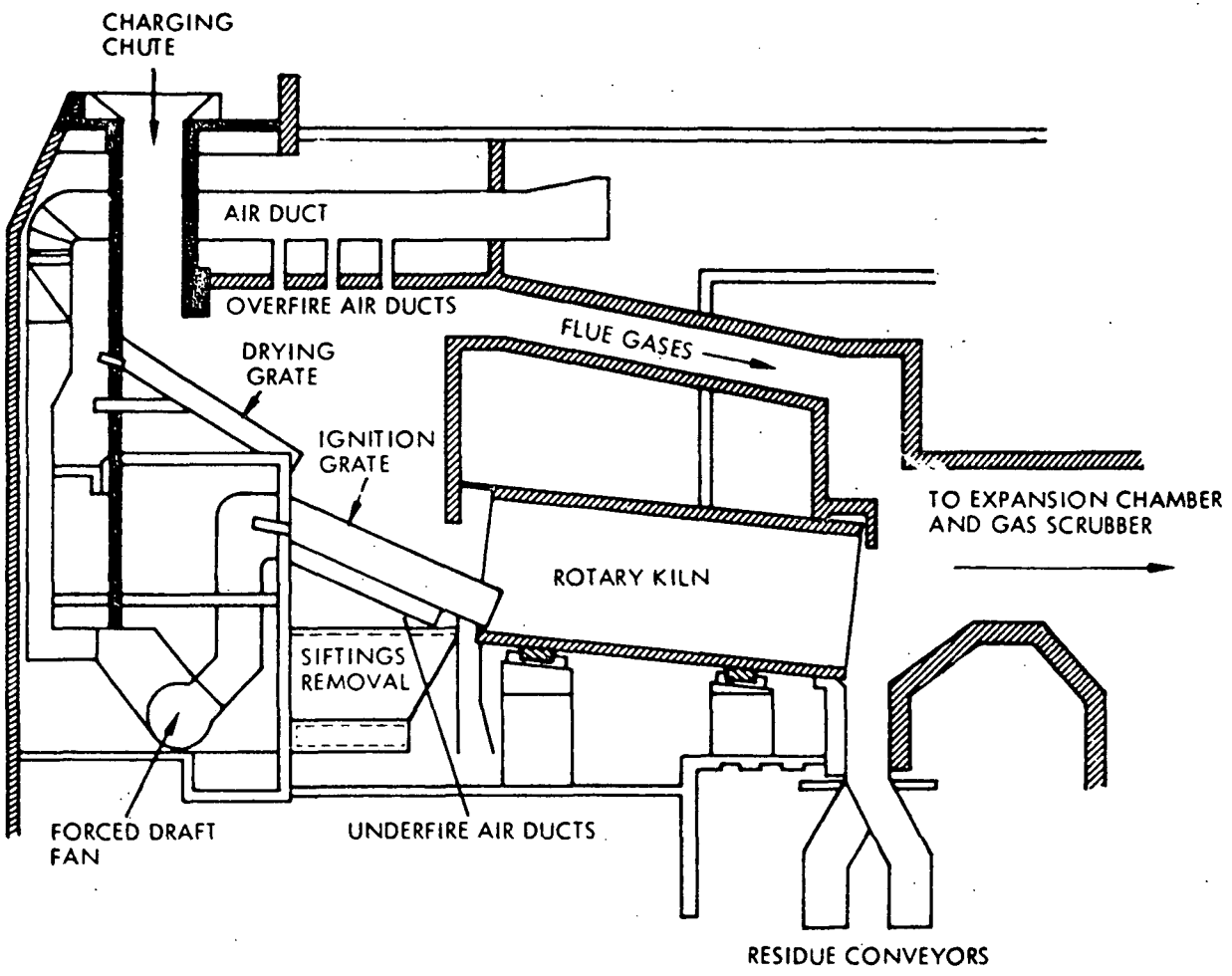

Source: Ottinger et al. (1973).

Figure 2. Municipal rotary kiln incineration facility.

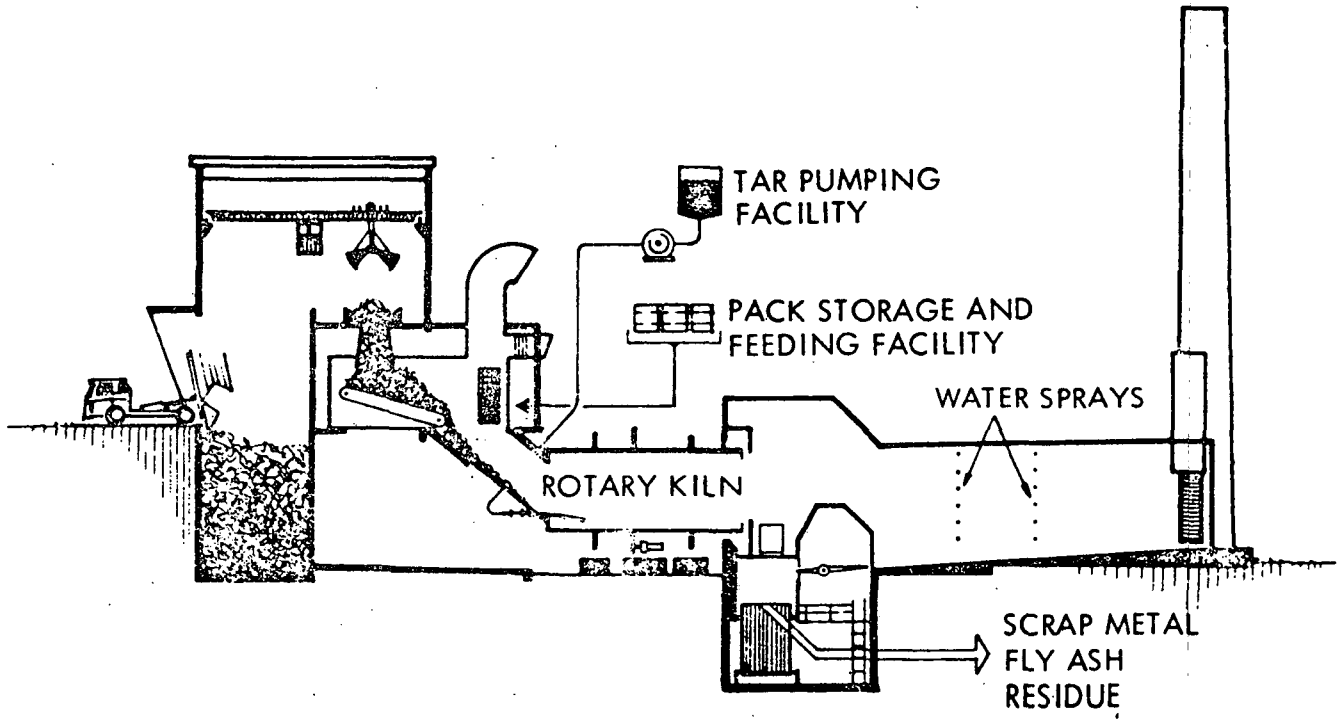

Sources: Ottinger et al. (1973) and Scurlock et al. (1975).

Figure 3. Typical major industrial rotary kiln incineration facility.

For example, a finely divided waste may require only 0.5 sec, while wooden boxes, municipal refuse, and railroad ties may require 5, 15, and 60 min, respectively.

Wet scrubber emission control systems are normally added to rotary kilns used to dispose of hazardous wastes. Most kilns also have heat recovery equipment to preheat combustion air or waste heat boilers for steam generation in large installations.

Portable rotary kiln incinerators are currently marketed. An example of this type of unit is the TUMBLE-BURNER, designed by Bartlett-Snow, shown in Figure 4. This unit is not as versatile as large rotary kiln installations since no pretreatment facilites for the waste are available. This requires that the waste to be incinerated must be properly sized and relatively homogeneous. The unit can incinerate solid waste material with a heat content of 2.3×10^6 to 3.5×10^7 J/kg (1,000 to 15,000 Btu/lb) and can also incinerate liquid and gaseous wastes when they are injected into the auxiliary burner used for temperature control in the incinerator. The unit can incinerate between 45 kg (100 lb) and 1.8 metric tons (MT) (2 tons) of waste per hour with a corresponding system size of 1.5 x 1.5 x 4.6 m (5 x 5 x 15 ft) to 4.3 x 4.6 x 10.4 m (14 x 15 x 34 ft).

Examples of industrial facilities now in operation which process hazardous wastes in a rotary kiln are: Dow Chemical Company at their Midland, Michigan, plant; Minnesota Mining and Manufacturing Corporation at their St. Paul, Minnesota, and Decatur, Alabama, chemical production complexes; and Eastman Kodak's Rochester, New York, facility (in planning). These facilities incinerate captive industrial wastes and do not normally accept wastes from outside sources. Rollins Environmental Services, Inc., in Logan Township, New Jersey, is an example of an incineration facility that accepts solid and liquid chemical wastes for disposal in a system composed of a rotary kiln and a liquid injection unit attached to a common afterburner.

Fluidized Bed Incinerators

This type of incinerator was first used commercially in 1962 for waste disposal. These versatile units are capable of disposing of solid, liquid, and gaseous combustible wastes. They have found limited use in the petroleum and paper industries, in processing nuclear wastes, and for disposal of sanitary sludge.

Figure 5 is a schematic diagram of a typical fluidized bed incinerator. This unit operates by blowing air at a low velocity of about 1.5 to 2.0 m (5 to 7 ft) per second up through a bed of inert granular particles (typically sand) whose depth ranges from 38 cm (15 in.) to several meters. The air agitates or "fluidizes" the bed and creates a dense, turbulent medium which

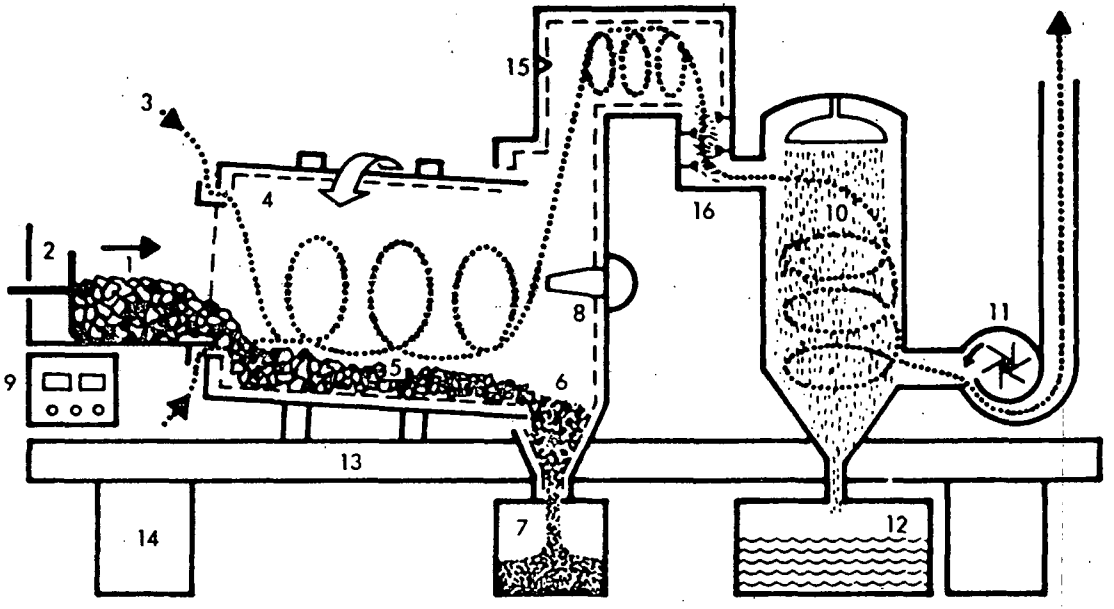

1 WASTE TO INCINERATOR

2 AUTO-CYCLE FEEDING SYSTEM:
FEED HOPPER, PNEUMATIC FEEDER, SLIDE GATES

3 COMBUSTION AIR IN

4 REFRACTORY-LINED, ROTATING CYLINDER

5 TUMBLE-BURNING ACTION

6 INCOMBUSTIBLE ASH

7 ASH BIN

8 AUTO-CONTROL PACKAGE:
PROGRAMMED PILOT BURNER

9 SELF-COMPENSATING INSTRUMENTATION-CONTROLS

10 WET-SCRUBBER PACKAGE:
STAINLESS STEEL, CORROSION-FREE WET SCRUBBER; GAS QUENCH

11 EXHAUST FAN AND STACK

12 RECYCLE WATER, FLY-ASH SLUDGE COLLECTOR

13 SUPPORT FRAME

14 SUPPORT PIERS

15 AFTERBURNER CHAMBER

16 PRECOOLER

Sources: Ottinger et al. (1973) and Scurlock et al. (1975).

Figure 4. Portable rotary kiln incineration units.

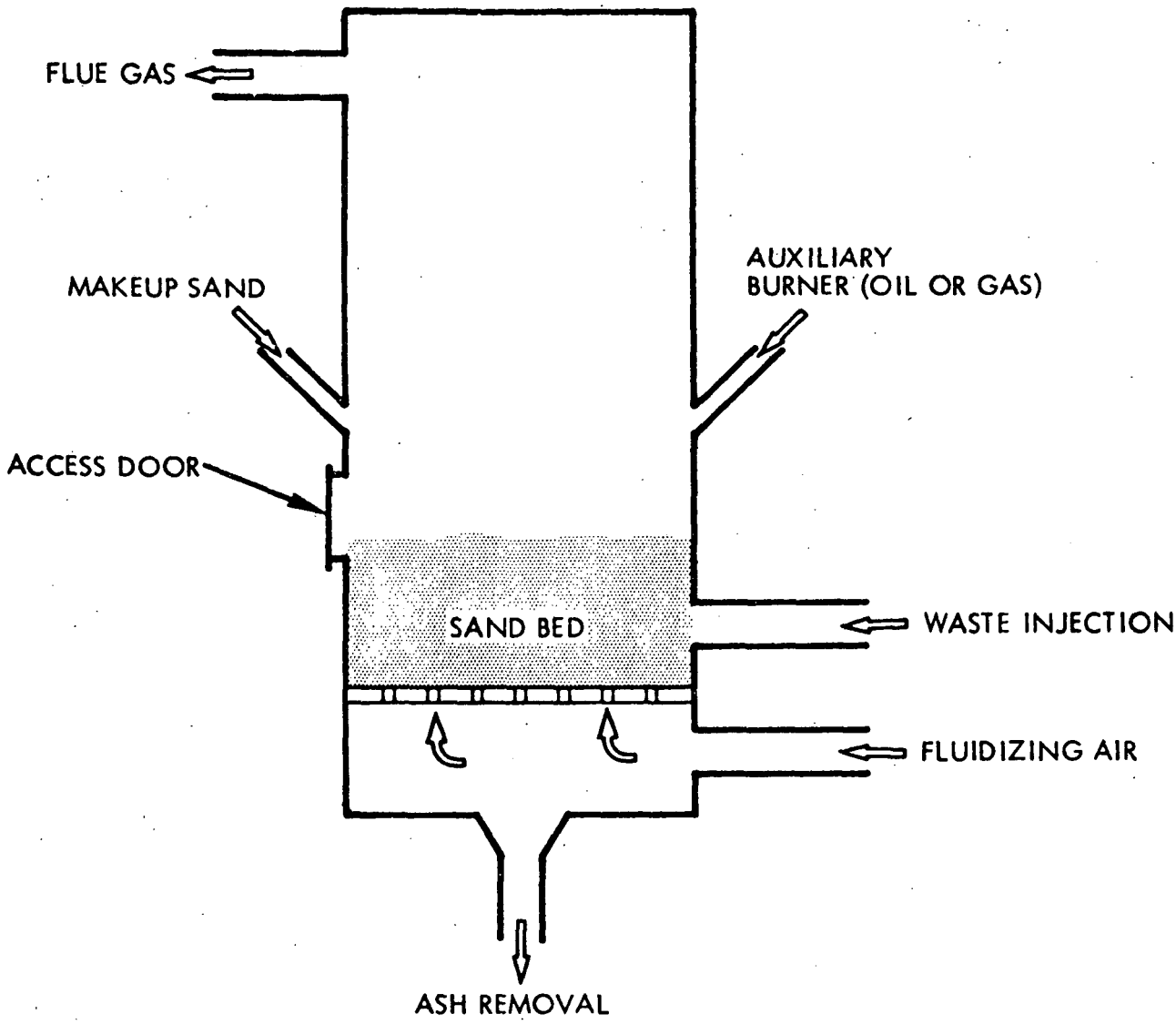

Sources: Ottinger et al. (1973) and Scurlock et al. (1975).

Figure 5. Schematic of a fluidized bed combustor.

behaves similarly to a liquid. Wastes are injected into the fluidized bed pneumatically, mechanically, or by gravity. Bed material and the wastes are rapidly and relatively uniformly mixed, and the mass of the fluidized bed is large relative to the mass of the injected waste.

Heat is supplied by an auxiliary gas or oil burner to maintain the bed temperature in the range of 760 to 870°C (1400 to 1600°F). At these temperatures, the fluidized bed provides a large heat reservoir of about 6.0×10^8 J/m^3 (16,000 Btu/ft^3), which is three orders of magnitude greater than the heat capacity of flue gases at similar temperatures in typical incinerators. Heat is transferred from the bed into the injected waste materials, the waste is rapidly combusted, and the heat of combustion is transferred back into the bed. Large waste particles are kept in suspension by the fluidizing air until they are completely incinerated. The residual fines (ash) are carried off with the flue gas exhaust at the top of the incinerator. This exhaust gas may be processed or scrubbed prior to atmospheric discharge by using fabric filters, electrostatic precipitators, dry collectors, and wet scrubbers. The collected ash is usually landfilled.

Wastes injected into a fluidized bed incinerator may require preprocessing to facilitate the incineration process. Dewatering may be required to remove the moisture content, shredding may be required to make the waste more homogeneous, and noncombustible materials (such as metals) may have to be removed to prevent residual buildup in the bed.

The advantages of this type of incineration are that it is generally applicable to the disposal of solid, liquid, and gaseous combustible wastes; the design is simple and requires no moving parts in the combustion regions; the unit is compact due to high heat rates, which reduces capital cost; and relatively low gas temperatures and excess air requirements minimize nitric oxide formation, which could reduce emission control requirements and costs. The disadvantages of this unit are that removal of residual material from the bed is a potential problem; and temperatures in the bed cannot exceed the softening point of the bed material to avoid softening and agglomeration of the material.

Examples of fluidized bed incinerators used to incinerate hazardous wastes are the Liquid and Solid Waste (LSW) Disposal System of Combustion Power Company located at Menlo Park, California, and the EPA demonstration grant fluidized bed incinerator located at the Franklin, Ohio, Resource Recovery Plant.

Liquid Injection Incinerators

This type of incinerator is quite versatile and can incinerate virtually any combustible liquid waste. These units are widely used in manufacturing industries and vary widely in operating conditions and applicability. Some wastes currently disposed of in industry with these units are separator sludges,

skimmer refuse, oily wastes, detergent sludges, digester sludges, cutting oils, coolants, strippers, phenols, wine wastes, potato starch, vegetable oils, washer liquids, still and reactor bottoms, soap and detergent cleaners, animal oils and rendering fats, plating wastes, lubricating oils, soluble oils, polyester paint, polyvinyl chloride (PVC) paint, latex paint, thinners, solvents, polymers, resins, cheese wastes, inks, and dyes.

Operating conditions in liquid injection units vary widely. Temperatures vary from 650 to 1650°C (1200 to 3000°F) with a typical temperature of 870°C (1600°F), and residence times vary from 0.5 to 1.0 sec. Most units have a heat release of approximately 9.3×10^8 J/hr-m^3 (25,000 Btu/hr-ft^3) with the exception of the Vortex Type Liquid Combustor which has an unusually high heat release of about 3.7×10^9 J/hr-m^3 (100,000 Btu/hr-ft^3).

Liquid waste incineration requires atomization of the liquid and violent turbulence and mixing of the droplets to effect rapid vaporization and good combustion. The viscosity of the liquid is reduced by heating or mixing a low viscosity liquid into the waste liquid. The liquid is then atomized by rotary cup atomization or pressure atomization through a single orifice nozzle or through a two-fluid nozzle, which may be an internal mix, external mix, or sonic type nozzle. Turbulent mixing is achieved in many cases by supplying a forced draft to the combustion chamber.

Liquid injection incinerators are classified as horizontally fired or vertically fired units. A typical horizontally fired liquid waste incineration system is shown in Figure 6, and a typical vertically fired system is shown in Figure 7. The horizontal unit is one operated by Dow Chemical Company at their Midland, Michigan, plant. The vertical unit is one designed and marketed by the Prenco Division of Pickands Mather and Company. Figure 8 shows a unique type of unit called the Vortex combustor. It is unusual in that its heat release capability is four times higher than the other type units.

The horizontally fired incineration system operates by feeding the waste to the unit through a combination of four dual-fired nozzles. Combustion gases pass through a spray chamber, a venturi scrubber, and a cooler/mist-eliminator prior to exhaustion through a stack.

The vertically fired incineration system operates by first heating the vertical retort up to the desired temperature with a mixture of high pressure air and auxiliary fuel. When the retort attains the proper temperature, the waste is fed into the air waste entrainment compartment for aeration and then into the turbulence compartment for mixing with high pressure air. The mixture is then fed into the bottom of the vertical decomposition chamber where the waste is broken down by oxidation, ionization, and molecular dissociation. The combustion gases flow vertically through the air cone, which serves as a fuel saver and an afterburner, and out the top of the retort.

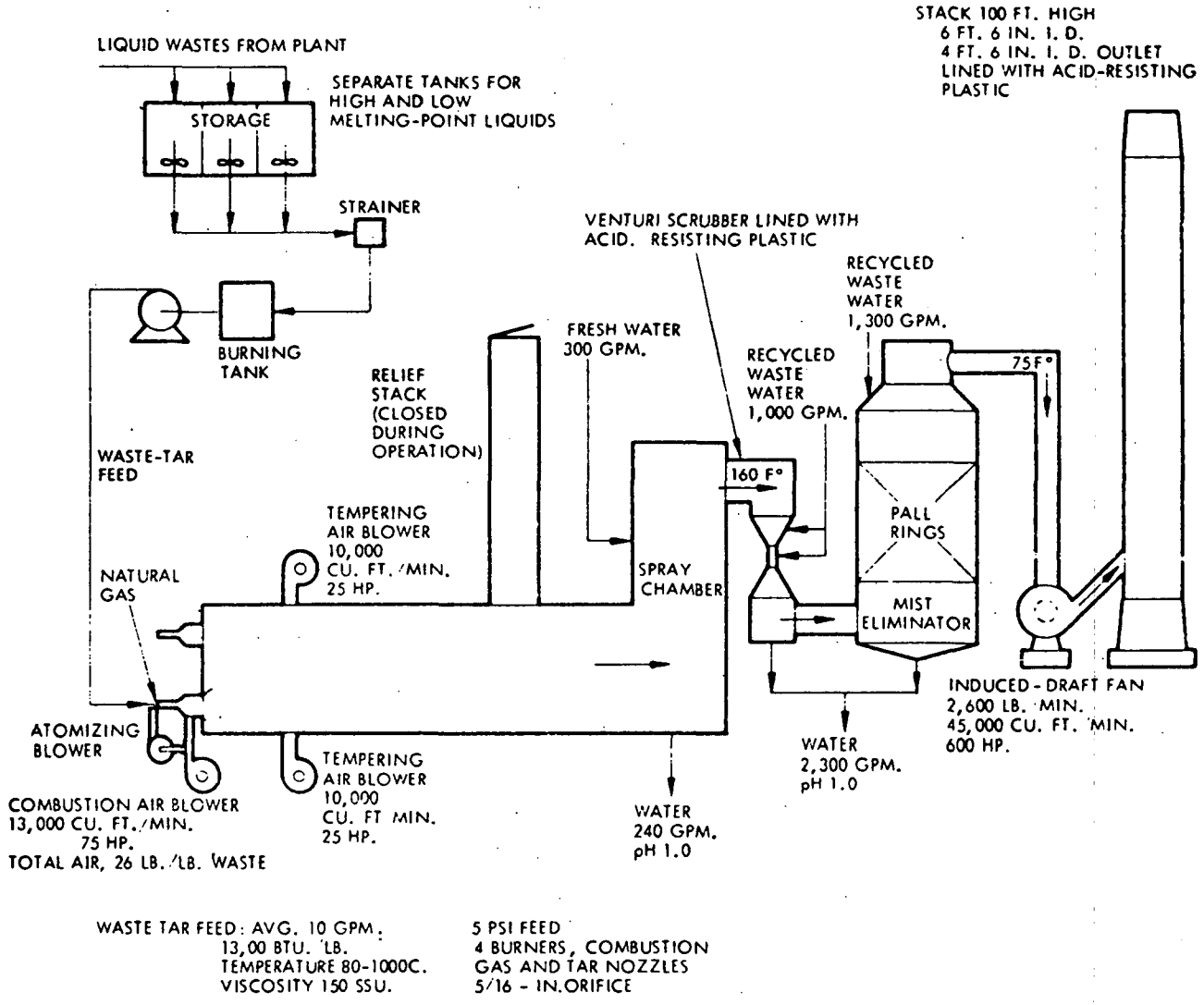

Source: Ottinger et al. (1973).

Figure 6. Horizontally fired liquid waste incineration system.

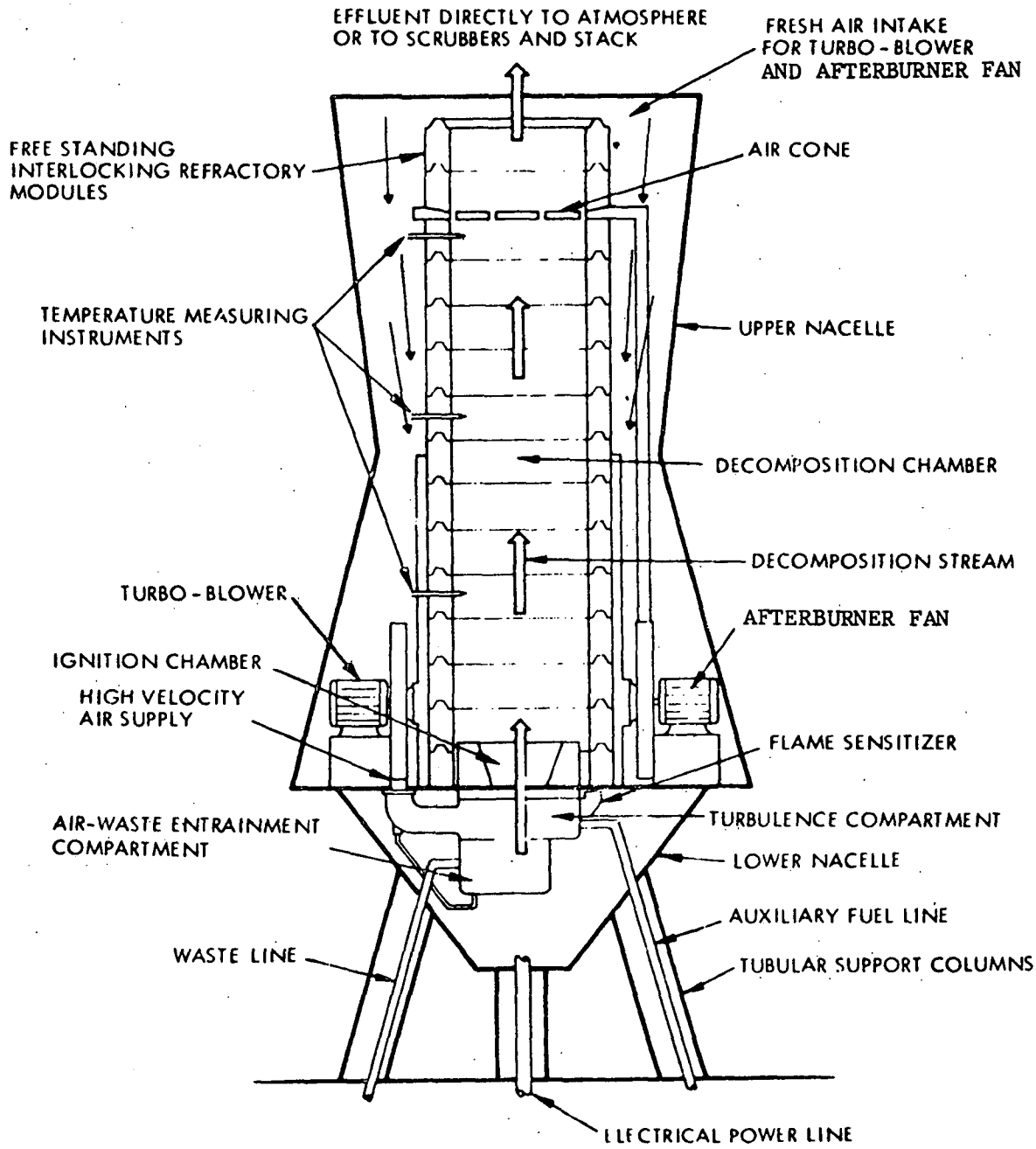

Sources: Ottinger et al. (1973) and Scurlock et al. (1975).

Figure 7. Typical vertically fired liquid waste incinerator.

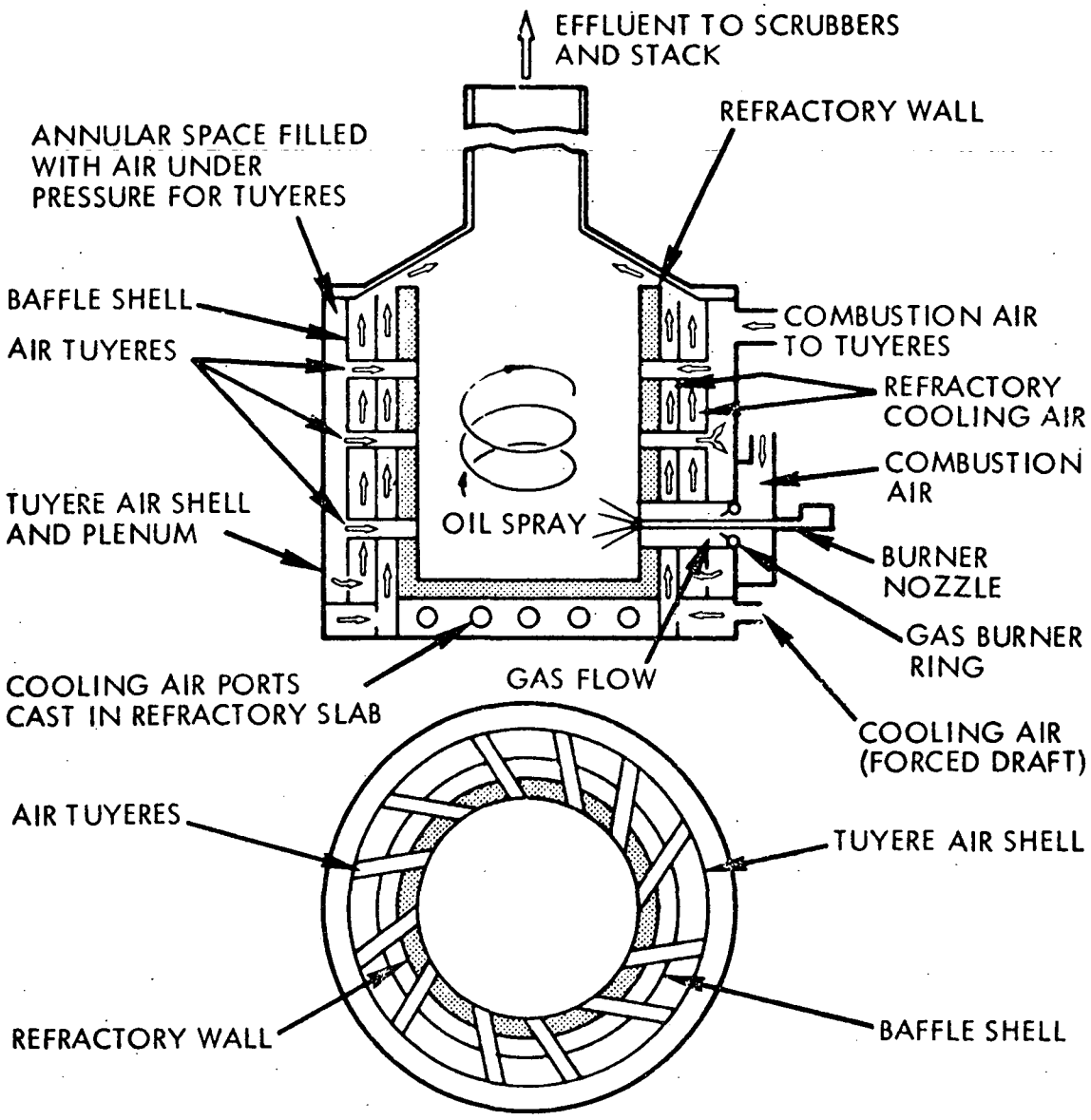

Sources: Ottinger et al. (1973) and Scurlock et al. (1975).

Figure 8. Vortex liquid waste incinerators.

The exhaust gases are reduced to 340°C (650°F) by the air cone and can be passed through scrubbers if desired. These incineration systems operate between 870 and 1650°C (1600 and 3000°F).

The Vortex combustor is a cylindrical furnace in which the liquid waste is fired tangentially by a modified oil burner into the bottom of the ignition chamber. Tangential firing creates a vortex of hot gases which flow upward through the combustion chamber, which is preheated to 430 to 540°C (800 to 1000°F) for 1 hr prior to injecting the wastes. Preheated high velocity secondary air is introduced from tangential tuyeres to maintain the vortex as the gases rise in the unit. Operating temperature ranges between 650 and 870°C (1200 and 1600°F) with 20% excess air.

An example of liquid injection incinerator facilities used in central disposal operations of hazardous wastes is Rollins Environmental Services, Inc., at Bridgeport, New Jersey. The General Electric plant at Pittsfield, Massachusetts, and the Dow Chemical Company plant at Midland, Michigan, process in-house wastes with liquid injector incinerators. TRW Systems has developed a liquid injection incinerator capable of high destruction efficiencies and short dwell times for some pesticides, and the Marquardt Company of Van Nuys, California, developed the Sudden Expansion (SUE®) burner. Liquid injection type incinerators have also been placed on ships for shipboard incineration of liquid wastes. Two examples are the ships Vulcanus and Mathias III.

Multiple-Chamber Incinerators

This type of incinerator is used to dispose of most forms of combustible municipal and industrial solid wastes, such as garbage, general refuse, wood, paper, rubber, wire coatings, phenolic resins, acrylic resins, epoxy resins, and PVC. Its normal application is limited to solid wastes.

There are two types of multiple-chamber incinerators: the retort type (shown in Figure 9) and the in-line type (shown in Figure 10). Each type consists of three separate chambers; an ignition chamber, a downdraft or mixing chamber, and an up-pass expansion or secondary combustion chamber. Solid wastes are fed to the ignition or primary chamber where they are dried, ignited, and combusted into gases and particulates. These products pass into the mixing chamber where secondary air is introduced. The gases are mixed when passed through restricted flow areas, subjected to abrupt changes in flow direction, and expanded and contracted in ducts and chambers. The combustion products then flow into the secondary combustion chamber where combustion is completed, and exhaust gases are emitted through a stack or a combination of gas cooler and induced draft system. The ash is collected in the combustion chamber by wall impingement and settling and is removed through ports in the chamber.

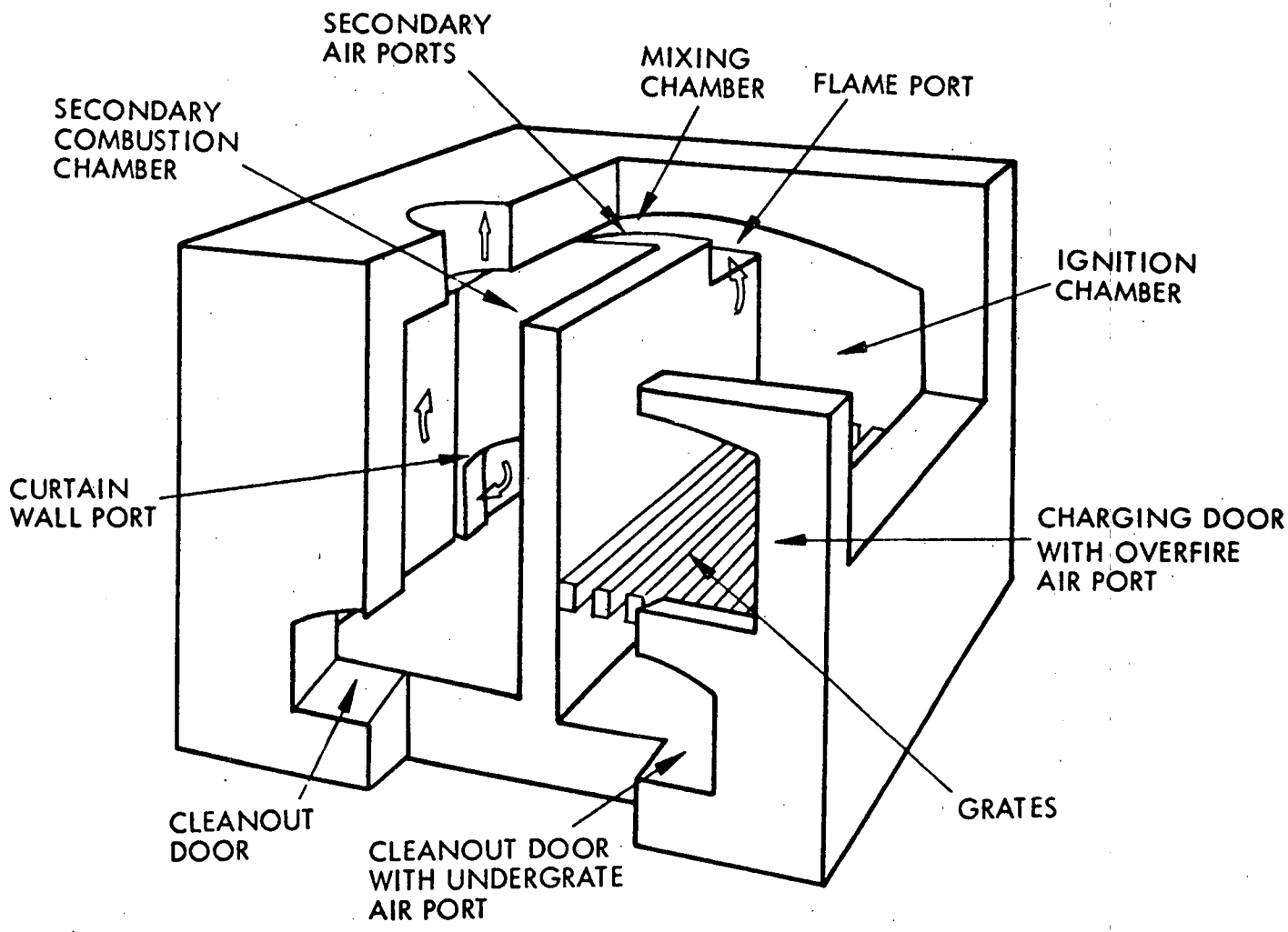

Source: Ottinger et al. (1973).

Figure 9. Retort multiple chamber incinerator.

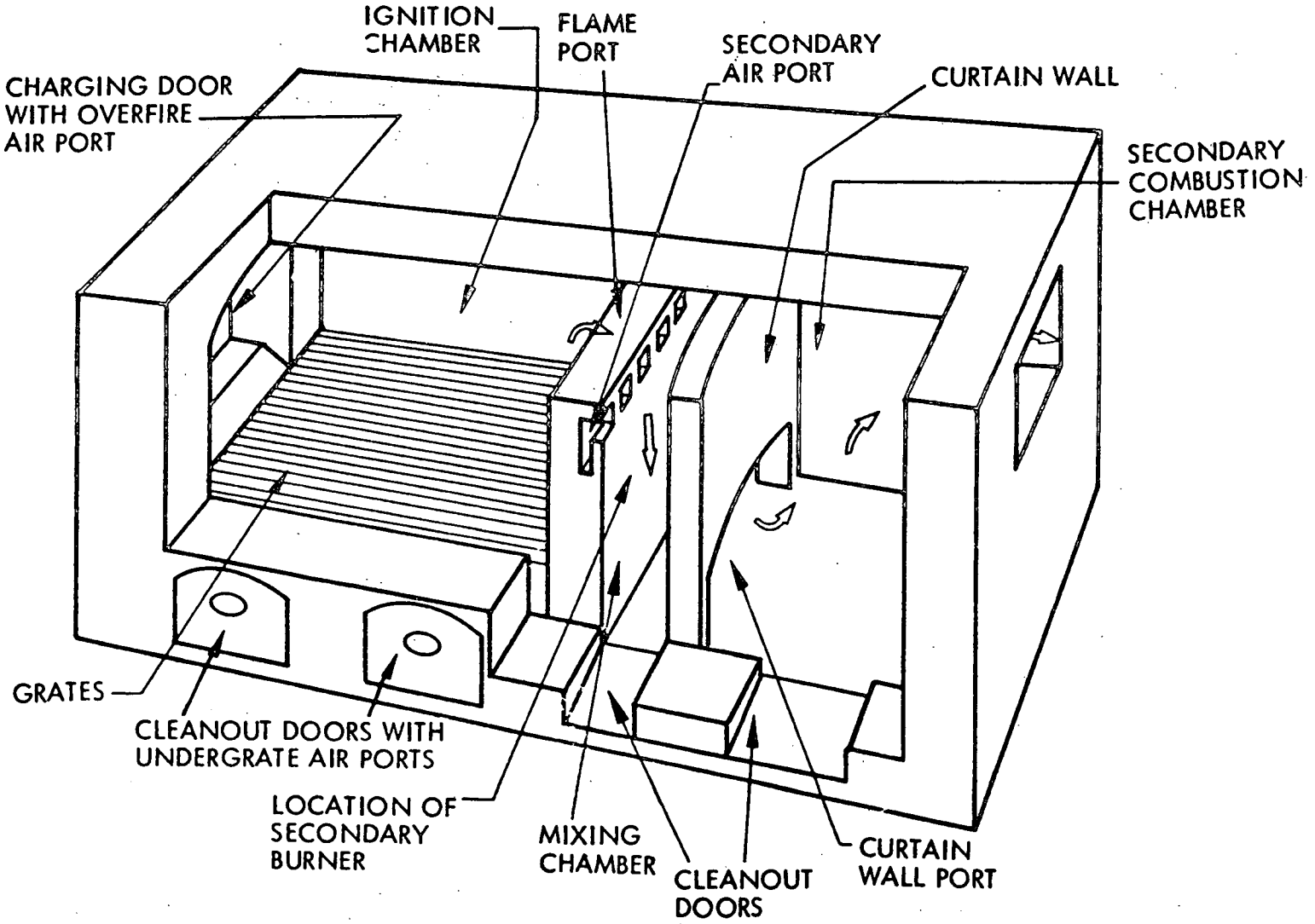

Sources: Ottinger et al. (1973) and Scurlock et al. (1975).

Figure 10. In-line multiple chamber incinerator.

Supplementary gas burners are not generally required when the moisture content of the solid waste is less than 10%. Moisture contents of 10 to 20% usually require the addition of gas burners in the mixing chamber, and moisture contents above 20% usually require additional burners in the ignition chamber.

The average temperature of the combustion products is 540°C (1000°F). This temperature is low for the destruction of most pesticides although it can be increased through the use of proper construction materials and additional supplementary gas burners.

RESEARCH AND DEVELOPMENT

Various organizations have conducted research on the disposal of pesticides by incineration. Some of the research and development work has been done on a laboratory or pilot scale, while other efforts have been directed towards incinerating pesticides in commercial or industrial scale operations. This section of the report gives brief descriptions of research and development programs--laboratory- and pilot-scale research and commercial or industrial scale research--and summarizes the results of these programs.

Research and Development Programs

Laboratory and Pilot-Scale Research--

Mississippi State University--Investigators at Mississippi State University (MSU) conducted a series of pesticide disposal studies for the U.S. Department of Agriculture between 1967 and 1975. These studies have resulted in a number of published papers, as well as a series of unpublished grant reports. The objectives of the first study were to make laboratory determinations of the combusting temperatures and volatile off-gases of 20 analytical grade pesticides, 20 of the most commonly used formulations of these pesticides, and 8 types of pesticide containers; to determine the design requirements for readily combustible pesticide containers; and to develop specifications for an incinerator to dispose of pesticides and containers. The second study involved incinerating the same pesticides and containers in laboratory furnaces and a pilot plant incinerator to determine the respective burning parameters of the pesticides and containers established in the laboratory tests and to study scrubbing techniques to remove the toxic off-gases from the effluent gas stream. A third study involved determining the thermal degradation products of additional pesticides (Holloman et al., 1975; Holloman et al., 1976; Kennedy et al., 1969; Kennedy et al., 1972a; Kennedy et al., 1972b; Stojanovic et al., 1972a; and Stojanovic et al., 1972b.)

In the first study three different methods of laboratory incineration or thermal treatment were used; differential thermal analysis, dry combustion, and ashing in a muffle furnace. The 20 pesticides investigated represented a

wide range of chemical compounds and included 13 herbicides, 4 insecticides, 2 fungicides, and 1 nematocide (both the analytical grade pesticides and their most commonly used formulations). The 20 pesticides were: 2,4-D, picloram, atrazine, diuron, trifluralin, bromacil, DSMA, DNBP, dicamba, dalapon, paraquat, vernolate, 2,4,5-T, carbaryl, DDT, dieldrin, malathion, PMA, zineb, and Nemagon®. The pesticide containers investigated were: milk cartons, clear polyethylene, amber polyethylene, polyethylene, PVC, Teflon™, and metal.

Differential thermal analysis showed that the combustion temperatures of the pesticides were well within the range of temperatures attainable in conventional incinerators. The analytical grade pesticides were completely incinerated from about 250 to 879°C (480 to 1610°F); 15 of the compounds were completely combustible at 700°C (1290°F) or below, while 5 required 700 to 900°C (1290 to 1650°F). The commercial formulations required about the same temperature range, 508 to 852°C (950 to 1565°F), and dalapon, trifluralin, and Nemagon® required higher temperatures than the respective analytical grade compounds.

Dry combustion of the analytical grade pesticides at 900°C (1650°F) revealed that, on the average, 10% of the carbon is not accounted for as CO_2.

When the commercial formulations were incinerated, all but six formulations approached complete combustion at 800°C (1470°F). Atrazine, bromacil, carbaryl, and dalapon contained 10% of uncombustible residue at 1000°C (1830°F), while DSMA and zineb yielded 19 and 23% ash, respectively, at 1000°C (1830°F). Analyses of the volatile products of the 20 pesticides incinerated at 900°C (1650°F) revealed that carbon dioxide, carbon monoxide, chlorine, hydrogen chloride, hydrogen sulfide, nitric acid, nitrogen oxides, and residues of inorganic compounds were produced.

The investigators concluded that pesticides could be disposed of by incineration but that further work was required to provide suitable scrubber technology to remove the toxic gases from the effluent gas stream.

A second study was conducted in which the same pesticides and containers were incinerated in the laboratory in one or two resistance-type furnaces connected in series and in a model incinerator equipped with a flue gas scrubber system. Incineration in both the laboratory and the model incinerators was accompanied by tests to determine the kinds and quantities of corrosive inorganic gases emitted and to determine the kinds of gas scrubbing or gas trapping systems needed for the various gases emitted. The emission gases analyzed were carbon monoxide, carbon dioxide, chlorine, hydrogen chloride, ammonia, nitrogen oxide, hydrogen sulfide, sulfur dioxide, and various oxidants. Many substances were tested as scrubbing and absorbing agents for chlorine, hydrogen chloride, hydrogen sulfide, sulfur dioxide, and carbonyl sulfide, and included acidic solutions, alkaline solutions, solid alkalies, and various mixtures. The significant findings of the study were:

* Incineration of chlorinated pesticides at 900°C (1650°F) produced both free chlorine gas and hydrogen chloride.

* Incineration of DDT at 900°C (1650°F) produced emission of chlorine, hydrogen chloride, and oxides of chlorine in a ratio of 1:6:3.

* Incineration of nitrogen-containing compounds at 900°C (1650°F) produced ammonia in the emissions.

* Incineration of sulfur-bearing pesticides, specifically thiocarbamates and organophosphates, at 900°C (1650°F) produced sulfur dioxide and hydrogen sulfide.

* Catalysts (molybdic anhydride, cupric sulfate, lignin, and humic acid) reduced the temperatures necessary to "crack" and detoxify the pesticide molecules when added to the pesticides during incineration.

* Halogen-, sulfur-, and nitrogen-containing gases were effectively scrubbed from the incinerator effluent gas with solutions of metal hydroxides (sodium and potassium).

* Sulfur dioxide was most effectively scrubbed by sodium hydroxide solutions.

* Solid potassium carbonate effectively scrubbed halogens from the effluent gas but would be too corrosive to use in an incinerator.

* Neutralization of halide-scrubbing solutions prior to landfill released the halogens and would be both impractical and prohibitive because of the air pollution which could result.

The third study conducted by MSU, concluded in 1975, investigated the thermal degradation of selected pesticides. In one segment of the study, the thermal degradation products of mirex were determined at temperatures between 525 and 700°C (975 and 1290°F). The investigators found that the gaseous products included carbon monoxide, carbon dioxide, hydrogen chloride, chlorine, carbon tetrachloride and phosgene, and the residue contained mostly hexachlorobenzene with traces of hexachlorocyclopentadiene. In another segment of the study, the gaseous products of three chlorinated herbicides--chloramben, linuron, and propanil--were determined for incomplete combustion at 400°C (750°F). Gases identified included HCN, NO, CH_3NH_2, HCl, NO_2, CH_3Cl, C_2H_3Cl, and C_2H_5Cl. The investigators concluded that these gases would have to be scrubbed from the effluent stream before incineration would be an acceptable method for disposal of chlorinated herbicides.

Midwest Research Institute--Midwest Research Institute (MRI), Kansas City, Missouri, designed and constructed an experimental incineration system to evaluate the effect of operational variables (rate of pesticide injection, percent excess air, operating temperature, and retention time) on the efficiency with which organic pesticides can be incinerated. This system included a pilot-scale incinerator (45.4 kg/hr (100 lb/hr) Type 1 waste* capacity), a three-stage scrubber, and a scrubber water treatment system. Nine pesticides in 15 liquid and solid formulations were tested by injection into the primary combustion chamber. The pesticides studied were DDT, aldrin, picloram, malathion, toxaphene, atrazine, captan, zineb, and mirex (Ferguson et al., 1975).

Results of the incineration tests were evaluated in terms of the efficiency of AI destruction, i.e., the percent of the pesticide destroyed within the combustion chamber. Over a range of combustion chamber, retention time, temperature, and excess air rate combinations, efficiencies of greater than 99.99% were achieved for all pesticides tested except mirex. Test results were used to estimate stack emission rates for the subject pesticides when incinerated at 1000°C (1832°F) with 2-sec retention time.

A set of operating conditions (temperature, retention time, and excess air rate) was developed from comparable results for all 15 formulations; the set is believed to be applicable to the incineration of most organic pesticides.

Analysis of the incinerator effluents also showed that high concentrations of sulfur dioxide and cyanide were present when organosulfur and organonitrogen pesticides, respectively, were incinerated under certain operating conditions. Particulate loadings in the effluent gases during the incineration of solid pesticide formulations (dusts, wettable powders, granules, and pellets) were above federal limits established for new stationary sources having a capacity of or greater than 45,000 kg/day (50 tons/day). Thus, the investigators concluded that particulate emission control devices will be required for pesticide incinerators.

University of Dayton Research Institute (UDRI), Dayton, Ohio--Investigators at UDRI developed a specialized laboratory technique that could quickly and economically evaluate a pesticide's destruction characteristics within minimal environmental risk. The technique consisted of a two-step destruction process which first vaporized the pure pesticide at a low temperature of 200 to 300°C (390 to 570°F) and then passed the gas phase sample through a

---

* Type 1 waste is defined as rubbish, a mixture of combustible waste such as paper, cardboard cartons, wood scrap, foliage and combustible floor sweepings, from domestic, commercial and industrial activities. This type of waste contains 25% moisture, 10% incombustible solids and has a heating value of 1.51×10^7 J/kg (6,500 Btu/lb).

high-temperature quartz tube. The advantages of this technique were precise control and measurement of the critical parameters of temperature and residence time; the capability of evaluating the thermal destruction of pesticides on the molecular level; and the use of pure pesticides to remove interferences from other materials. This technique has been found to be a substantial advancement in the state of the art of pesticide incineration research since results from experiments on the thermal destruction of pesticides are reproducible (Duvall and Rubey, 1976).

Laboratory tests were conducted to evaluate the high temperature destruction of Kepone®, DDT, and mirex. Results of the tests showed that Kepone® and DDT were essentially destroyed at 500°C (930°F) and a residence time of 1 sec, while mirex required 700°C (1290°F) for destruction at the same residence time. At a temperature of 900°C (1650°F), the destruction efficiences were: Kepone® > 99.9995%, DDT > 99.9980%, and mirex, > 99.9998%. Effluents from these tests contained two major decomposition products: hexachlorocyclopentadiene (HCPD) and hexachlorobenzene (HCB). The first product was present in the 400 to 600°C (750 to 1110°F) range, while HCB was present in the 500 to 900°C (930 to 1650°F) range.

United States Army Land Warfare Laboratory, Aberdeen Proving Ground, Maryland--A study was performed to provide local post engineer organizations with an acceptable method for disposing of small quantities of DDT-kerosene mixtures. The system devised was simply a 208-liter (55-gal.) drum lined with a refractory material (Fiberfrax®) and open at one end, an oil burner, and a scrubber system constructed from a shower head. The 208-liter (55-gal.) drum served as the furnace, and the gases were passed through a scrub tower containing the shower head and a scrubber ring. The scrubber water was neutralized by running it over limestone (Rosen, 1974).

This simple system was capable of burning 19 liters (5 gal.) of DDT-kerosene solution per hour. Sampling and analyses of the stack gases for total hydrocarbons, opacity, CO_2, O_2, N_2, CO, particulates, hydrochloric acid, and residual DDT, and tests for residual DDT and hydrochloric acid in the scrubber water were conducted by the Army Environmental Hygiene Agency. These tests showed that the emissions from burning DDT in this manner were below the combustion emission standards established by the State of Colorado. DDT was 99.9999+% destroyed at a temperature of about 1400°C (2550°F) with a dwell time of 3 sec.

Foster D. Snell, Inc., Florham Park, New Jersey--This company conducted a study to investigate the disposal of pesticides and pesticide containers by

combustion in the field;[a] the effect of oxidizers and binding agents on pesticide combustion; the combustion characteristics of container materials; and the possible use of special liners to assist the combustion of the pesticides and containers (Putnam et al., 1971).

Prior to the open field combustion studies, laboratory studies were conducted to determine the combustion and decomposition characteristics of several pesticides. The decomposition products of DDT and malathion were determined at various temperatures, with and without the use of oxidizing agents, in a pyrolysis unit. A differential scanning calorimeter was used to determine the decomposition characteristics of DDT, maleic hydrazide, aldrin, dalapon, Diazinon®, malathion, carbaryl, PCNB, aminotriazole, and atrazine when heated alone, in the presence of oxidizers, or in the presence of binders, in both closed and open systems. Oxidizers tested included potassium chlorate, potassium nitrate, sodium nitrate, and others. Binders tested included mineral oil, paraffin wax, polyethylene, and others.

These tests showed that polyethylene and mineral oil are satisfactory binding agents and significantly increase the amounts of some pesticides (carbaryl, DDT, PCNB, and aldrin) that decompose at 300°C (570°F) but have little effect on the decomposition of other pesticides (Diazinon®, malathion, and atrazine). The tests also showed that the addition of potassium chlorate to carbaryl, PCNB, or DDT increased the amount of pesticide decomposed at 300°C (570°F) but has no effect on aldrin, Diazinon®, malathion, or atrazine.

Tests were then conducted to determine the combustion characteristics of pesticides burned in an open field. Pesticides were placed in polyethylene bags, surrounded by Kraft paper or cardboard, and burned. DDT, aldrin, dalapon, Diazinon®, malathion, carbaryl, maleic hydrazide, PCNB, atrazine, 2,4-D, MH-30, and aminotriazole were tested in this manner.

The investigators concluded that pesticides may be 99% or more destroyed by combustion at temerature of 500 to 690°C (930 to 1270°F) achieved by burning wood, paper, cardboard or plastics; that binding agents aid combustion of the pesticide by retaining it; that oxidizing agents lower the temperature necessary for complete combustion and aid oxidation; and that the combustion gases emitted are mainly carbon dioxide, carbon monoxide, sulfur dioxide, chlorine, ammonia, hydrogen sulfide, hydrogen chloride and phosgene, depending upon the pesticide burned.

Canadian Defence Research Council, Suffield--This organization incinerated DDT during the period 1971 to 1973 in its Thermal Destructor in Ralston, Alberta (Scurlock et al., 1975). The Thermal Destructor was designed by

---

a/ Open burning of pesticides or pesticide containers is not recommended by EPA (see Appendix B).

Pyrotherm Equipment Ltd., of Burlington, Ontario, to incinerate chlorinated hydrocarbons like DDT with provisions also to incinerate sulfur compounds. It consisted of a horizontal cylindrical combustion chamber, a dual-fired (natural gas and oil) burner installed in one end, and a vertical cylindrical scrubbing tower installed on the other end to remove HCl from the exhaust gases. The operating temperature in the combustion chamber was held at 900°C (1650°F) to incinerate the DDT and operated at a DDT feed rate of 380 liters (100 gal.) per hour (Montgomery et al., 1971).

A total of 708,000 liters (187,000 gal.) of 5% DDT/kerosene solution was destroyed in the incinerator. Test results showed that 99.9998 to 100.0% of the DDT was destroyed in the Thermal Destructor operation. Using the lower figure, it was estimated that < 0.065 kg (2.3 oz) of DDT remained undestructed during incineration of the entire quantity (Scurlock et al., 1975, and Montgomery et al., 1971).

Powders containing 10, 50, and 92% DDT were also incinerated in this unit at feed rates of 15 kg/hr (33 lb/hr), 5.5 kg/hr (12 lb/hr), and 5.5 kg/hr (12 lb/hr), respectively. Analyses of the scrubber water showed that the DDT concentration was < 0.01 ppm and the DDE concentration was < 0.001 ppm during normal operating conditions. DDT deposits were < 0.1 ppm and DDE deposits were < 0.03 ppm in the waste heat boiler when the powder containing 92% DDT was burned (Lee et al., 1971).

TRW Systems, Inc., Redondo Beach, California--TRW conducted a laboratory-scale incineration study for the U.S. Army from 1973 to 1975 (Shih et al., 1975). A total of 11 individual pesticide formulations and 3 mixed pesticide formulations were incinerated in a liquid injection-laboratory-scale incinerator. This system consisted of an injector assembly that included a compressed air-driven fuel atomizer, a combustion chamber, an afterburner section, a quench chamber, and a packed-bed wet scrubber for removal of particulates and hydrogen chloride. The individual pesticide formulations investigated were DDT (5% oil solution, 20% oil solution, 25% emulsifiable concentrate (EC), and 10% dust), lindane (1% dust and 12% EC), dieldrin (15% EC), chlordane (5% dust), 2,4-D liquid ester, and 2,4,5-T liquid esters.

Experimental data collected focused on the optimal temperatures, air-to-pesticide supplementary fuel ratios, furnace residence times, combustion products, and destruction efficiency. The data indicated that the mean destruction efficiency for the pesticide AI was > 99.9975% when the conditions for complete combustion of the pesticide formulations were attained. For most pesticide formulations investigated, a minimum of 0.4 sec residence time at temperatures in excess of 1000°C (1832°F) and excess air in the range of 45 to 60% were found to be necessary for complete destruction of the pesticides. The combustion chamber refractory liners were not significantly affected during the tests, and burning dust formulations did not result in significant agglomeration or breakdown of the dust particles.

The incineration tests revealed that the major equilibrium products of combustion were CO_2, H_2O, HCl, N_2, and O_2 when the incinerator temperature ranged between 540 and 1370°C (1000 and 2500°F) with 30% excess air present. Essentially all of the chlorine present in the pesticide formulations was converted to HCl.

Chemagro, Division of Mobay Chemical Corporation, Kansas City, Missouri--Chemagro designed and patented a mobile unit to decontaminate and recycle metal pesticide containers (U.S. Patent No. 3,701,355). The unit consisted of a shredder, incinerator, afterburner, and gas scrubber mounted on the flatbed of a truck, trailer, or train car. Spent metal pesticide containers would be shredded to nugget-sized (2.5 cm or 1 in. diameter) pieces and incinerated at about 540 to 700°C (1000 to 1300°F) to burn off all organic residual matter on the metal. Combustion air for the incinerator would come from the large volume of pesticide-contaminated air generated by the shredding operation. The combustion gases from the incinerator would then pass through the afterburner (1000°C or 1830°F) and the gas scrubber to decontaminate the gas prior to discharge into the atmosphere. A conceptual drawing of the disposal unit is shown in Figure 11.

In viewing Figure 11, it is important to note that the design was never built and tested as a total disposal unit; only portions of the unit were individually operated to confirm overall feasibility and to estimate the operating performance characteristics.

Chemagro tested the concept by processing a series of 19-liter (5-gal.) cans and 114-liter (30-gal.) and 190-liter (50-gal.) drums, which had contained disulfoton liquid concentrate, through the shredder and an incinerator. The incinerator was operated at about 650°C (1200°F) and the residence time was 4 min. The scrap metal recovered contained less than 1 ppm disulfoton in comparison to a contamination of about 10,000 ppm on the metal containers.

The project has not been active since 1975 because Chemagro Agricultural Division of Mobay Chemical Corporation is not interested in experimenting, developing, or commercializing the unit at the present time; but they would be willing to license the technology to interested parties (Scott, 1977).

The Marquardt Company, Van Nuys, California--This company incinerated DDT in solution, Herbicide Orange, and hydrazine in their SUE® burner developed 14 years ago as a source of high temperature, high pressure air for testing air-breathing ramjet engines. The Marquardt Company has sold about 50 units with operating temperatures ranging from 540 to 3150°C (1000 to 5700°F), and currently markets a SUE® burner as a liquid waste disposal system (Scurlock et al., 1975).a/

a/ SUE® burners are available on special order for specific applications (Babbitt, 1978).

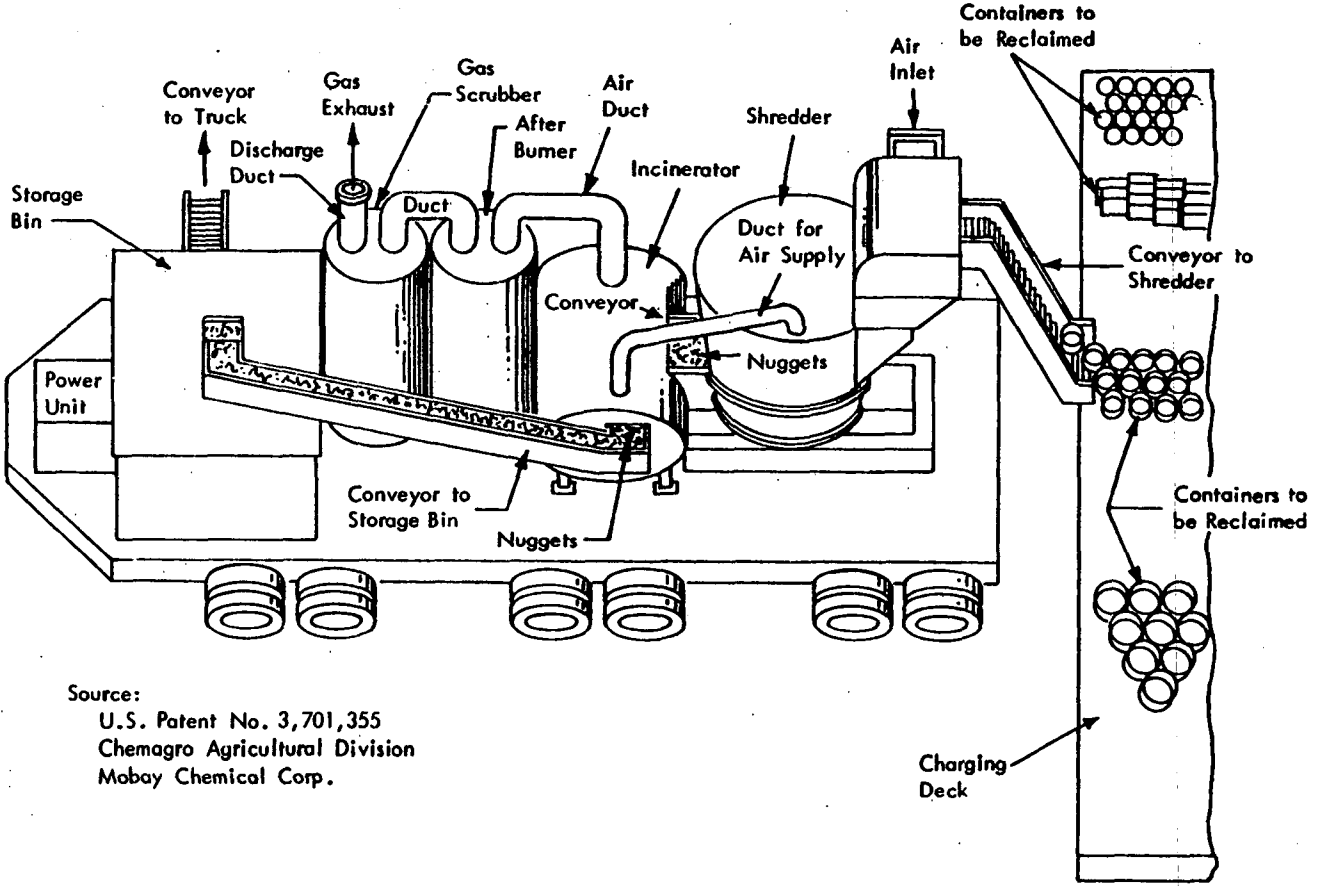

Source:
U.S. Patent No. 3,701,355
Chemagro Agricultural Division
Mobay Chemical Corp.

Figure 11. Conceptual drawing of a mobile metal pesticide container disposal unit.

The apparatus used in the pesticide tests consisted of a SUE® burner incinerator and reaction tailpipe, and a venturi scrubber and scrubber collection tank. The system was preheated with natural gas and combustion air, and the temperature was maintained by using the herbicide formulations as combustion fuel during incineration. The scrubber water injected into the venturi scrubber contained about 12% by weight NaOH to neutralize the HCl formed in the incinerator. Combustion exhaust gases leaving the reaction tailpipe passed through the venturi scrubber before being exhausted to the atmosphere (Riley, 1975).

One drum each of 5 and 20% DDT solution was incinerated for the Department of the Army, and test results showed that chlorinated hydrocarbons were not detectable in either the combustion gases or scrubber water. The system was operated at tailpipe exit temperatures of 1090°C (2000°F) and a residence time of 0.14 sec (Scurlock et al., 1975).

During the period 1972 through 1973, Marquardt incinerated Herbicide Orange for the Department of the Air Force. Twenty-eight 208-liter (55-gal.) drums were destructed at temperatures ranging from 975 to 1370°C (1760 to 2500°F) at residence times ranging from 0.14 to 0.18 sec. The system could accept 150 liters (39 gal.) per hour. When the system was operated at temperatures between 1230 and 1370°C, (2250 and 2500°F) the destruction efficiency was 99.980 to 99.999%. The scrubber water contained dichlorophenol, 2,4-D, 2,4,5-T, aliphatic hydrocarbons, and a biphenyl compound but did not contain dioxin (Riley, 1975; Scurlock et al., 1975; and Münnecke et al., (1976).

Hydrazine was incinerated in the unit during this same period at temperatures of 690°C (1270°F) and 1225°C (2240°F) with a retention time of 20 sec. Hydrocarbons in the combustion gas effluent were less than 10 ppm. Destruction efficiencies for hydrazine were not reported (Riley, 1975).

MB Associates, Inc., San Ramon, California--This company is currently designing a mobile thermal detoxification system for destroying hazardous wastes under EPA Contract No. 68-03-2515. The system consists of a rotary kiln followed by an afterburner followed by gas stream cleaning equipment utilizing induced draft in order to avoid vapor and dust leakage at seals and connections. Heat energy is supplied by oil-fired burners in the kiln and afterburner (Tenzer, 1978).

The 132 cm (52 in.) ID by 5 m (16 ft) long kiln can be fed solids by means of a ram stoker, or sludge and liquids by means of a positive displacement pump system. Solids are first shredded in a shear-type shredder which is capable of shredding 55-gal. steel drums, small logs, and steel belted radial tires. The kiln is being designed for direct firing and includes standard heat transfer mixing chains. The refractory lining has been selected for thermal cycling, heat resistance, corrosion resistance, and over-the-road capability.

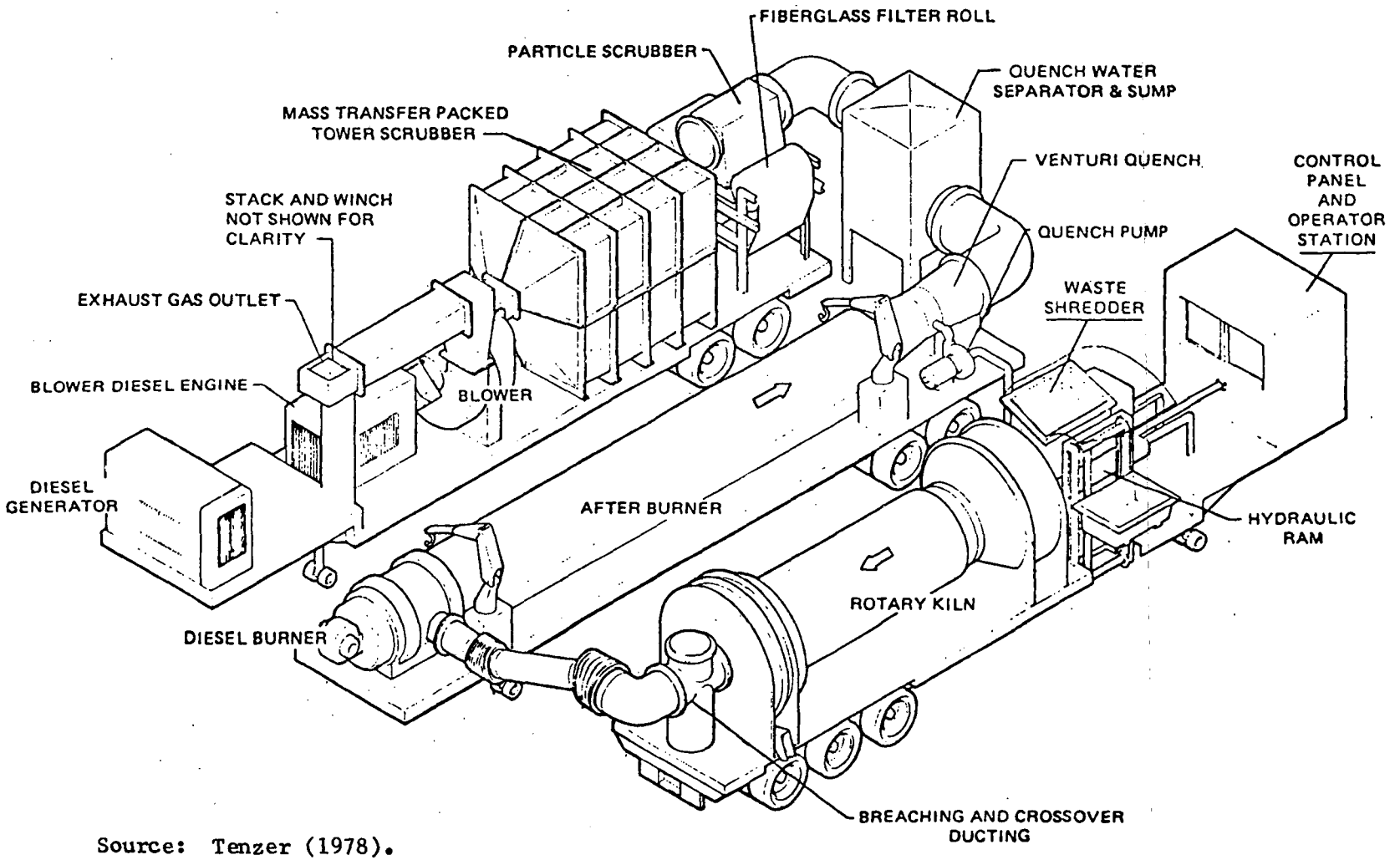

Source: Tenzer (1978).

Figure 12. Artistic rendering of mobile rotary kiln for disposal of hazardous wastes.

The refractory-lined afterburner is sized for the optimum kiln throughput of hazardous materials in soil with 10% moisture. It will be a tubular unit 132 cm (52 in.) ID by 11 m (36 ft) in length. The design incorporates road shock considerations by utilizing rubber in shear supports as well as air ride suspension on the trailer.

The gas stream cleaning equipment includes both particle and mass transfer scrubbing equipment necessary to control P_2O_5 from organic phosphates and SO_2 from sulfur-bearing compounds.

The operating parameters of the design are:

Kiln	- 815 to 980°C (1500 to 1800°F) 1 hr residence time for solids
Afterburner	- 1100°C (2012°F) minimum temperature 2 sec gas residence time
Gas effluent	- P_2O_5 - maximum permanent plume opacity - 10% SO_2 - 200 ppm maximum HCl - 200 ppm maximum
Feed rates	- 1,361 kg/hr (3,000 lb/hr) hazardous material bearing soil with 10% moisture

A preliminary artist's rendering of the proposed system is shown in Figure 12. Design details are still under development.

Commercial/Industrial Scale Incineration--

Versar, Inc.--This company conducted a two-phase study to demonstrate that DDT and 2,4,5-T could be destroyed in a sewage sludge incinerator (Whitmore, 1975). In the first phase, DDT powder (75% AI), DDT in kerosene (20% AI), and Weedon® solution (20% 2,4,5-T), were incinerated in a 76-cm (30-in.) six-hearth pilot-scale furnace operated by Envirotech Corporation at Brisbane, California. The pesticides were mixed with sludge containing about 20% by weight solids in the ratio of 0.02 g/g and 0.05 g/g pesticides to sludge. Incineration was conducted on all the pesticides with the afterburner at 760°C (1400°F), at 955°C (1750°F), and shut off. Results showed that the destruction efficiencies of 2,4,5-T were above 99.95% with and without the afterburner operating. In almost all cases the highest pesticide losses (including DDT, DDD, DDE, and 2,4,5-T) were in the scrubber water. No tetrachlorodioxin was detected in the 2,4,5-T formulation or in the incinerator off-gas.

In the second phase, the same type of pesticide formulation was incinerated in the municipal sewage sludge incinerator at Palo Alto, California, under normal operating conditions (which includes an afterburner). Destruction efficiencies were 99.97% or higher for DDT (including DDD and DDE) at an average

hearth temperature of about 635°C (1175°F) and an afterburner temperature of about 650°C (1200°F); they were 99.99% or higher for 2,4,5-T at an average hearth temperature of about 690°C (1275°F) and an average afterburner temperature of about 660°C (1220°F). DDE and DDD were both formed during DDT incineration, but no dioxin was detected during the 2,4,5-T incineration tests. The destruction efficiencies reported were conservative since most of the undestroyed pesticides and their derivatives were found in the scrubber water, which was returned to the plant for recycling.

The report concluded that DDT and 2,4,5-T can be safely destroyed by co-incineration with sewage sludge in a multiple hearth furance and that the internal hearth temperatures should be maintained in excess of 550 to 600°C (1000 to 1100°F) in order to minimize the formation of DDE.

Midland-Ross Corporation Surface Division, Toledo, Ohio--This company incinerated small amounts of Kepone® (4 kg maximum sample size) mixed with sewage sludge from January through March 1977. Some 8,553 g (18.85 lb) were vaporized and then thermally destroyed at a temperature of 1100°C (2000°F) with a residence time of 2 sec. The major decomposition products were CO_2, H_2O, and sodium chloride, with small amounts of HCl and traces of hexachlorobenzene. The destruction efficiency exceeded 99.99% for Kepone®. The final report of the tests will be available during the summer of 1978 (Carnes, 1977; Chemical and Engineering News, 1977a; and Chemical Engineering, 1977).

The State of Virginia recently authorized Flood and Associates of Jacksonville, Florida, to develop a Kepone® facilities plan as required by Section 201 of P.L. 92-500. This plan will provide for an incinerator to destroy 45,000 kg (100,000 lb) of Kepone®.

General Electric Company (GE)--GE incinerated a 20% liquid DDT formulations in a liquid injection-type incinerator located at its Pittsfield, Massachusetts, plant during September 1974 (Leighton and Feldman, 1975). The incinerator is a Vortex combustor normally used for the disposal of waste oils and solvents from the plant manufacturing operations. The facility, which was manufactured by John Zink Corporation, consists of a horizontally mounted cylindrical combustion and oxidation chamber followed by a water spray quench pot, a countercurrent packed scrubber column, and a stack. Combustible liquid wastes are injected into the combustion chamber through two steam atomizing nozzles in a way that creates a vortex-type turbulence to produce a high heat release, longer retention time, and complete combustion. After combustion, the waste gases pass through the oxidation chamber which operates at 870 to 980°C (1600 to 1800°F) at residence times of 1 to 12 sec. The gases are then cooled in the quench pot with water sprays, passed through the packed bed scrubber column, and exhausted through the stack.

Twenty-eight, 208-liter (55-gal.) drums of a 20% liquid DDT formulation were incinerated in the GE incinerator. Two feed rates, 1.89 liters/min

(0.5 gal/min) and 3.03 liters/min (0.8 gal/min), and two operating temperatures, 870°C (1600°F) and 980°C (1800°F), were used. Residence time varied from 3 to 4 sec, and excess air ranged from 120 to 160%. Concentrations of DDT, DDE, and DDD in the stack gas and scrubber water were below the limits of sensitivity of the analytical methods used during the tests, and the destruction efficiency exceeded 99.9999% in all of the tests.

Shell Chemical Company, Deer Park, Texas--The first officially sanctioned incineration at sea by the United States was conducted by Shell Chemical Company, Deer Park, Texas, under two research permits and one interim permit granted by the U.S. Environmental Protection Agency (EPA). The wastes incinerated were organochlorines--a mixture of trichloropropane, trichloroethane, and dichloroethane--generated by Shell in the production of glycerine, vinyl chloride, epichlorohydrin, and epoxy resins at its Deer Park, Texas, plant. Shell Chemical Company incinerated a total of 16,800 MT (18,500 tons) of organochlorine waste in four separate burns aboard the Dutch incinerator ship M/T Vulcanus in the Gulf of Mexico during the period October 1974 to January 1975 (Wastler et al., 1975; and Maritime Administration, 1975).

The research permits required that the stack emissions from the Vulcanus be monitored. Appropriate systems were installed to conduct the tests during the first two burns. During each of the first two burns, 4,200 MT (4,600 tons) of organochlorine wastes were burned in the two combustion chambers of the Vulcanus at a maximum throughput of 25 MT (27.5 tons) per hour with a 1200°C (2190°F) minimum and a 1350°C (2470°F) average flame temperature. The last two burns were conducted under an interim permit issued by EPA, and the burns were monitored by U.S. Coast Guard aerial serveillance.

Stack gas emissions were monitored during the first two burns to determine plume dispersion characteristics and combustion efficiency. The findings indicated that more than 99.9% of the organochlorine wastes were oxidized and that the emissions consisted primarily of hydrogen chloride, carbon dioxide, and water. The emissions were discharged directly into the atmosphere without scrubbing, and the marine monitoring surveys indicated that there were no measurable increases in concentrations of trace metals and organochlorides in the water and marine life, that no adverse effects on migratory birds were observed, and that the maximum hydrogen chloride concentrations were 3 ppm in the air and 7 ppm at 6 m (19.7 ft) above sea level.

As a result of these tests, EPA has granted Shell Chemical Company a 2.5-year special permit to burn 50,000 MT (55,000 tons) of chemical waste by-products. They burned 16,000 MT (17,600 tons) of organochlorine wastes in the period February to March 1977 (Environmental Sciences and Technology, 1977).

Although the wastes burned were not pesticides, the technology employed may be transferable to the incineration of organochlorine pesticides marked for disposal.

U.S. Air Force--Incineration of 8.7 million liters (2.3 million gallons) of Herbicide Orange containing traces of the dioxin, TCDD, was accomplished during August 1977 by the Vulcanus in mid-Pacific Ocean approximately 196 km (120 miles) from Johnston Island and 1,600 km (1,000 miles) west of the Hawaiian Islands. The U.S. EPA permit issued to the U.S. Air Force and Ocean Combustion Services, B.V., required at least 99.9% destruction efficiency. Preliminary results of the incineration indicated a > 99.99% destruction efficiency. No detectable TCDD was found in the incinerator stack samples. The cost of the program was around U.S. $5 million (Kansas City Times, 1977; Chemical and Engineering News, 1977b; Pesticide and Toxic Materials News, 1977).

Results

Pesticide incineration research and development has been conducted on a laboratory and pilot scale and on a commercial/industrial scale by various organizations. University, governmental, and government-funded research published recently is reviewed in this report. Other research has been performed by private firms to solve their own disposal problems or to provide disposal services to others, but this is generally proprietary and unpublished and cannot be reviewed. Table 1 shows those organizations whose research studies are reviewed in this section, and some private firms who have performed in-house reasearch.

The research and development review presented above includes most of the research conducted on pesticide disposal by incineration. Some of this research, however, provides only limited information since it fails to provide the essential and complete data necessary for pesticide incineration operations. Foster D. Snell burned pesticides and pesticide containers in the open with no pollution control, which is an unacceptable practice today. Chemagro generated only limited data in its study, which never developed beyond the experimental stage. Incineration at sea conducted by Shell Chemical Company and by the U.S. Air Force and Ocean Combustion Services, B.V., provided valuable information on ocean incineration techniques and results; but the Shell Chemical Company tests did not incinerate pesticides, and data on the Air Force tests are not available at present.

The studies conducted by MSU, UDRI, and MRI determined the temperatures at which specific pesticides are completely combusted in laboratory apparatus. In its study, MSU used differential thermal analyses, and UDRI and MRI used both differential thermal analyses and thermal gravimetric analyses in their studies. The results of these three studies are shown in Table 2.

TABLE 1. ORGANIZATIONS THAT HAVE CONDUCTED RESEARCH ON PESTICIDE DISPOSAL BY INCINERATION

Laboratory and pilot-scale research
Canadian Government Defense Research Council, Suffield
Chemagro, Division of Mobay Chemical Corporation
Envirotech Systems, Inc.
Foster D. Snell, Inc.
MB Associates, Inc.
Marquardt Company
Midwest Research Institute
Mississippi State University
TRW Systems, Inc.
U.S. Army Land Warfare Laboratory, Aberdeen Proving Ground, Maryland
University of Dayton Research Institute
Versar, Inc.
Commercial industrial scale research
City of Palo Alto, California
General Electric Company
Midland-Ross Corporation
Shell Chemical Company
United States Air Force/EPA
Versar, Inc.
In-house research
Bartlett-Snow
Chem-Trol Pollution Services
Combustion Power Company
Dow Chemical Company
Monsanto Company
Rollins Environmental Services, Inc.
Velsicol Chemical Company

TABLE 2. TEMPERATURES OF COMPLETE COMBUSTION OF PESTICIDES DETERMINED IN LABORATORY EXPERIMENTS

Pesticide	Temperature of complete combustion °C	(°F)	Source[a/]
Aldrin			
Recrystallized	570	(1058)	MRI
19% granular	700	(1292)	MRI
Atrazine			
Reagent grade	650	(1202)	MSU
Technical grade	600	(1112)	MRI
80% wettable powder	600	(1112)	MSU
80% wettable powder	600	(1112)	MRI
Bromacil			
Reagent grade	716	(1321)	MSU
80% wettable powder	671	(1240)	MSU
Captan			
Technical grade	600	(1112)	MRI
50% wettable powder	600	(1112)	MRI
2,4-D (isooctyl ester)			
Reagent grade	602	(1116)	MSU
4 lb/gal. formulation	623	(1153)	MSU
DDT			
Reagent grade	500	(932)	UDRI
Reagent grade	560	(1040)	MSU
Technical flakes	850	(1560)	MSU
DNBP			
Reagent grade	639	(1182)	MSU
3 lb/gal. formulation	656	(1213)	MSU
DSMA			
Reagent grade	665	(1229)	MSU
3.2 lb/gal. formulation	612	(1135)	MSU
Dalapon			
Reagent grade	250	(482)	MSU
85% wettable powder	850	(1562)	MSU

(continued)

TABLE 2. (continued)

Pesticide	Temperature of complete combustion °C	(°F)	Source[a]
Dicamba			
Reagent grade	840	(1544)	MSU
4 lb/gal. formulation	850	(1562)	MSU
Dieldrin			
Reagent grade	620	(1148)	MSU
1.5 lb/gal. formulation	640	(1148)	MSU
Diuron			
Reagent grade	775	(1427)	MSU
80% wettable powder	550	(1022)	MSU
Kepone®			
Reagent grade	500	(932)	UDRI
Malathion			
Reagent grade	663	(1225)	MSU
5 lb/gal. formulation	715	(1319)	MSU
25% wettable powder	650	(1202)	MRI
Mirex			
Reagent grade	700	(1292)	UDRI
Technical grade	850	(1562)	MRI
Nemagon®			
Reagent grade	800	(1472)	MSU
8.6 lb/gal. formulation	596	(1105)	MSU
PMA			
Reagent grade	545	(1013)	MSU
95% water dispersible	646	(1195)	MSU
Paraquat			
Reagent grade	613	(1135)	MSU
2 lb/gal. formulation	592	(1098)	MSU

(continued)

TABLE 2. (continued)

Pesticide	Temperature of complete combustion °C	(°F)	Source[a/]
Picloram (potassium salt)			
Reagent grade	550	(1022)	MSU
Recrystallized	900	(1652)	MRI
11.6% solution	640	(1184)	MSU
10% pellet formulation	400	(752)	MRI
Carbaryl			
Reagent grade	724	(1335)	MSU
10% dust	678	(1252)	MSU
2,4,5-T (acid)			
Reagent grade	717	(1323)	MSU
4 lb/gal. formulation	731	(1348)	MSU
Toxaphene			
Technical grade	300[b/]	(572)	MRI
20% dust	710	(1310)	MRI
Trifluralin			
Reagent grade	879	(1614)	MSU
4 lb/gal. formulation	842	(1548)	MSU
Vernolate			
Reagent grade	447	(837)	MSU
6 lb/gal. formulation	508	(946)	MSU
Zineb			
Reagent grade	840	(1544)	MSU
Technical grade (85%)	800[c/]	(1472)	MRI
75% wettable powder	690	(1274)	MSU
75% wettable powder	800	(1472)	MRI

a/ Mississippi State University (MSU) data from Kennedy et al. (1969).
University of Dayton Research Institute (UDRI) data from Duvall and Rubey (1976).
Midwest Research Institute (MRI) data from Ferguson et al. (1975).

b/ Weight loss of toxaphene sample was 95% at 300°C (572°F).

c/ Weight loss of zineb sample was 80% at 800°C (1472°F).

Those studies conducted by MRI; Versar, Inc.; Envirotech, Inc.; the U.S. Army Land Warfare Laboratory; the Marquardt Company; TRW Systems Group; and the Canadian Government Defense Research Establishment, Suffield, were pilot-scale tests performed in model and prototype incinerators constructed for the destruction of pesticides. Studies by GE; Midland-Ross Corporation; Versar, Inc.; and the City of Palo Alto, California, were performed in commercial-scale incinerators. All these studies provide valuable information and the essential data base which exists today in pesticide incineration research. Table 3 gives the operating parameters of incineration research tests performed by these organizations.

Data provided in Table 3 include the feed rate, excess air, average temperature, retention time, and destruction efficiency for each individual pesticide formulation tested by these organizations. Since many of the studies were extensive, only representative data for each test are shown. These data were chosen to show the relationship between the combustion temperature, percent excess air, and retention time for highly efficient pesticide destruction ($\geq$ 99.99%).

Data in Table 3 show the following general trends:

1. The retention time necessary for complete destruction decreases with increasing temperature at a constant excess air input.

2. Temperatures required for the "complete" destruction of most pesticides shown are below 1000°C (1832°F) provided the proper excess air and retention time are used. For some pesticides the complete destruction temperatures are wide in range and are quite low if enough retention time is allowed.

3. All of the tests (except for MRI's 0.3% mirex bait test) were able to achieve a destruction efficiency of 99.99% or greater. Though the number of pesticides studied is only a small fraction of the total number of pesticides on today's market, the tests indicate that incineration has a great potential for the efficient and complete destruction of pesticides.

POTENTIAL IMPACTS

The potential environmental and economic impacts of pesticide disposal by incineration are discussed below.

Potential Environmental Impacts

The discussion which follows concerns the environmental impact of toxic stack gas emissions and waste pesticide emissions from any incineration facility. First, the toxic products of pesticide incineration are discussed in general terms to provide insight into the nature of the problem of stack gas emissions, pollution control device collections, and ash residues.

TABLE 3. OPERATING PARAMETERS OF INCINERATION RESEARCH TESTS OF INDIVIDUAL PESTICIDES

Pesticide	Pesticide formulation[a] % by weight	Formulation feed rate ℓ/hr (gal/hr)	Excess air (%)	Average temperature °C (°F)	Retention time (sec)[b]	Destruction efficiency (%)	Type of incinerator	Organization performing the test
Aldrin	41.2 (EC)	2.69 (0.71)	380	600 (1120)	14.5	> 99.99		
	41.2 (EC)	3.63 (0.96)	203	830 (1530)	8.9	> 99.99		
	41.2 (EC)	7.65 (2.02)	128	1020 (1870)	3.5	> 99.99	Pilot-scale multiple chamber	Midwest Research Institute
	41.2 (EC)	2.95 (0.78)	70	1140 (2080)	4.4	> 99.99		
	19 (G)	9.84 (21.7)[c]	113	860 (1580)	6.2	> 99.99		
	19 (G)	9.98 (22.0)[c]	48	1150 (2100)	5.2	> 99.99		
	19 (G)	19.50 (43.0)[c]	118	1100 (2020)	2.8	> 99.99		
Atrazine	40.8 (FC)	16.2 (4.28)	143	700 (1300)	6.9	> 99.99		
	40.8 (FC)	6.55 (1.73)	52	1040 (1900)	5.5	> 99.99		
	40.8 (FC)	15.9 (4.20)	140	940 (1720)	2.9	> 99.99	Pilot-scale multiple chamber	Midwest Research Institute
	80 (WP)	3.4 (7.5)[c]	146	940 (1720)	10.8	> 99.99		
	80 (WP)	3.6 (8.0)[c]	43	1050 (1920)	5.5	> 99.99		
Captan	50 (WP)	6.17 (13.6)[c]	99	690 (1280)	13.5	> 99.99	Pilot-scale multiple chamber	Midwest Research Institute
	50 (WP)	3.54 (7.8)[c]	192	660 (1220)	8.1	> 99.99		
	50 (WP)	6.44 (14.2)[c]	137	1000 (1830)	3.6	> 99.99		
Chlordane	5 (D)	0.45 (1.0)[c]	71	950 (1745)	0.13	> 99.99		
	5 (D)	0.45 (1.0)[c]	6	1120 (2050)	0.51	> 99.99		
	72 (EC)	0.72 (0.19)	48	920 (1690)	0.63	> 99.99	Pilot-scale liquid injection	TRW Systems Group
	72 (EC)	0.72 (0.19)	98	840 (1540)	0.52	> 99.99		
	72 (EC)	0.95 (0.25)	12	1150 (2105)	0.18	> 99.99		
Chlordane/ Dieldrin	18/11 (EC)	2.8 (0.75)	7	920 (1695)	0.94	> 99.99	Pilot-scale liquid injection	TRW Systems Group
	18/11 (EC)	3.8 (1.0)	46	950 (1750)	0.48	> 99.99		
	18/11 (EC)	3.8 (1.0)	47	940 (1725)	0.17	> 99.99		
2,4-D (Ester)	Not stated	3.8 (1.0)	-3	860 (1575)	0.90	> 99.99	Pilot-scale liquid injection	TRW Systems Group
	Not stated	3.8 (1.0)	46	880 (1615)	0.60	> 99.99		
	Not stated	3.8 (1.0)	13	910 (1675)	0.25	> 99.99		
2,4-D/ 2,4,5-T (Ester) 1:1 mixture	Not stated	0.95 (0.25)	-8	420 (780)	3.3	> 99.99	Pilot-scale liquid injection	TRW Systems Group
	Not stated	0.95 (0.25)	-8	900 (1650)	0.70	> 99.99		
	Not stated	0.95 (0.25)	15	1100 (2010)	0.17	> 99.99		

(continued)

TABLE 3. (continued)

Pesticide	Pesticide formulation[a] % by weight		Formulation feed rate ℓ/hr (gal/hr)	Excess air (%)	Average temperature °C (°F)	Retention time (sec)[b]	Destruction efficiency (%)	Type of incinerator	Organization performing the test
DDT	20	(OS)	113 (30)	157	870 (1600)	3.4	99.99	Commercial liquid injection vortex combustor	General Electric
	20	(OS)	182 (48)	163	870 (1600)	2.9	99.99		
	20	(OS)	113 (30)	123	980 (1800)	3.0	99.99		
	20	(OS)	182 (48)	122	980 (1800)	4.0	99.99		
	5	(K)	~ 205 (~ 55)	No data	900 (1650)	No data	> 99.99	Pilot-scale liquid injection	Canadian Defense Research Establishment
	5	(OS)	3.0 (0.75)	30	1090 (2000)	0.7	> 99.99	Pilot-scale liquid injection	TRW Systems Group
	5	(OS)	1.9 (0.5)	30	1200 (2200)	0.5	> 99.99		
	5	(OS)	3.8 (1.0)	50	1000 (1830)	0.2	> 99.99		
	5	(OS)	1.9 (0.5)	76	860 (1580)	0.9	> 99.99		
	20	(OS)	0.95 (0.25)	26	1040 (1990)	0.5	> 99.99		
	20	(OS)	0.72 (0.19)	70	940 (1720)	0.2	> 99.99		
	20	(OS)	0.95 (0.25)	92	320 (600)	0.2	> 99.98		
	25	(EC)	1.9 (0.5)	30	890 (1640)	1.2	> 99.99		
	25	(EC)	3.8 (1.0)	65	1040 (1900)	0.14	> 99.99		
	25	(EC)	1.9 (0.5)	103	820 (1510)	0.3	> 99.98		
	10	(D)	0.45 (1.0)[c]	30	1130 (2060)	0.14	> 99.99		
	10	(D)	0.45 (1.0)[c]	47	1010 (1850)	0.14	> 99.99		
	10	(D)	0.45 (1.0)[c]	76	930 (1705)	0.13	> 99.99		
	20	(K)	0.91 (2.0)[d]	> 100	840 (1550)	45 min	> 99.99	Pilot-scale multiple hearth	Versar, Inc., and Envirotech, Inc.
	20	(K)	2.25 (5.0)[d]	> 100	840 (1540)	45 min	> 99.99		
	75	(D)	1.18 (2.6)[d]	> 100	760 (1410)	45 min	> 99.99		
	75	(D)	3.0 (6.6)[d]	> 100	790 (1460)	45 min	> 99.99		
	75	(D)	0.91 (2.0)[d]	> 100	630 (1170)	~45 min	99.98	Municipal multiple hearth sewage sludge	Versar, Inc. and City of Palo Alto, California
	75	(D)	2.25 (5.0)[d]	> 100	630 (1170)	~45 min	99.98		
	10	(D)	0.98 (2.16)[c]	164	930 (1710)	2.6	> 99.99		
	10	(D)	2.23 (4.91)[c]	156	1020 (1860)	3.2	> 99.99	Pilot-scale multiple chamber	Midwest Research Institute
	25	(EC)	1.91 (4.23)[c]	162	940 (1730)	2.5	> 99.99		
	25	(EC)	4.63 (10.25)[c]	143	930 (1700)	1.8	> 99.99		
	20	(K)	18.9 (5.0)	No data	1400 (2550)	3.0	> 99.99	Prototype pilot-scale liquid injection	U.S. Army Land Warfare Laboratory
Dieldrin	15	(EC)	3.8 (1.0)	-7	870 (1600)	0.72	> 99.99		
	15	(EC)	3.8 (1.0)	46	970 (1785)	0.47	> 99.99	Pilot-scale liquid injection	TRW Systems Group
	15	(EC)	2.8 (0.75)	91	910 (1665)	0.18	> 99.99		
Herbicide Orange		(EC)	195 (430)[c]	37	1220 (2210)	0.18	> 99.99		
		(EC)	260 (570)[c]	52	1040 (1900)	0.16	> 99.99	Pilot-scale SUE® burner	Marquardt Corporation
		(EC)	260 (570)[c]	53	980 (1790)	0.14	> 99.99		
Kepone®	Unknown[e]		Unknown[e]	No data	1090 (2000)	2.0	> 99.99	Commercial high-temperature sludge incinerator	Midland-Ross Corporation Surface Division

(continued)

TABLE 3. (continued)

Pesticide	Pesticide formulation[a] % by weight		Formulation feed rate ℓ/hr (gal/hr)	Excess air (%)	Average temperature °C (°F)	Retention time (sec)[b]	Destruction efficiency (%)	Type of incinerator	Organization performing the test
Lindane	1	(D)	0.7 (1.5)[c]	19	1040 (1900)	0.50	> 99.99		
	1	(D)	0.7 (1.5)[c]	89	810 (1490)	0.38	> 99.99		
	1	(D)	0.45 (1.0)[c]	67	950 (1740)	0.13	> 99.99	Pilot-scale liquid injection	TRW Systems Group
	12	(EC)	2.8 (0.75)	2	960 (1760)	0.86	> 99.99		
	12	(EC)	3.8 (1.0)	32	1080 (1975)	0.48	> 99.99		
	12	(EC)	2.8 (0.75)	31	1270 (2310)	0.14	> 99.99		
Malathion	57	(EC)	2.38 (0.63)	176	620 (1140)	13.3	> 99.99		
	57	(EC)	6.47 (1.78)	95	960 (1760)	7.8	> 99.99		
	57	(EC)	3.60 (0.95)	130	1050 (1930)	4.4	> 99.99	Pilot-scale multiple chamber	Midwest Research Institute
	25	(WP)	13.2 (29)[c]	113	730 (1340)	11.3	> 99.99		
	25	(WP)	19.2 (42)[c]	37	1040 (1900)	7.7	> 99.99		
	25	(WP)	13.8 (31)[c]	156	930 (1710)	3.7	> 99.99		
Mirex	0.3	(B)	10.9 (24)[c]	79	700 (1290)	12.2	> 99.70		
	0.3	(B)	10.5 (23)[c]	225	590 (1090)	6.2	> 98.21	Pilot-scale multiple chamber	Midwest Research Institute
	0.3	(B)	10.9 (24)[c]	141	920 (1690)	3.3	> 99.97		
	0.3	(B)	24.0 (53)[c]	57	900 (1650)	5.8	> 99.98		
Picloram	21.5	(WB)	8.8 (2.3)	298	530 (990)	15.6	> 99.99		
	21.5	(WB)	5.7 (1.5)	62	930 (1700)	7.9	> 99.99		
	21.5	(WB)	13.6 (3.6)	116	1030 (1880)	2.4	> 99.99	Pilot-scale multiple chamber	Midwest Research Institute
	10	(P)	16.8 (37)[c]	226	640 (1190)	14.3	> 99.99		
	10	(P)	32.2 (71)[c]	72	930 (1700)	9.5	> 99.99		
	10	(P)	17.3 (38)[c]	93	1020 (1870)	2.7	> 99.99		
2,4,5-T	20	(PS)	0.90 (2.0)[d]	> 100	780 (1430)	~45 min	> 99.99	Pilot-scale multiple hearth	Versar, Inc. and Envirotech, Inc.
	20	(PS)	2.25 (5.0)[d]	> 100	780 (1430)	~45 min	> 99.99		
	20	(PS)	0.55 (1.2)[d]	> 100	700 (1290)	~45 min	> 99.99	Municipal multiple hearth sewage sludge	Versar, Inc. and City of Palo Alto, California
	20	(PS)	1.73 (3.8)[d]	> 100	700 (1290)	~45 min	> 99.99		
	Ester		3.8 (1.0)	-11	920 (1680)	0.93	> 99.99		
	Ester		3.8 (1.0)	49	840 (1540)	0.65	> 99.99	Pilot-scale liquid injection	TRW Systems Group
	Ester		3.8 (1.0)	33	880 (1615)	0.23	> 99.99		

(continued)

TABLE 3. (continued)

Pesticide	Pesticide formulation[a/] % by weight		Formulation feed rate ℓ/hr (gal/hr)	Excess air (%)	Average temperature °C (°F)	Retention time (sec)[b/]	Destruction efficiency (%)	Type of incinerator	Organization performing the test
Toxaphene	60	(EC)	2.0 (0.53)	150	650 (1200)	13.2	> 99.99		
	60	(EC)	2.8 (0.75)	47	1040 (1900)	6.9	> 99.99		
	60	(EC)	2.35 (0.62)	124	980 (1800)	4.8	> 99.99	Pilot-scale multiple chamber	Midwest Research Institute
	20	(D)	15.0 (33)c/	94	670 (1240)	16.0	> 99.99		
	20	(D)	16.4 (36)c/	166	670 (1240)	11.0	> 99.99		
	20	(D)	14.5 (32)c/	121	1010 (1850)	5.2	> 99.99		
Zineb	75	(WP)	4.3 (9.5)c/	102	680 (1260)	10.3	> 99.99		
	75	(WP)	2.3 (5.1)c/	165	650 (1200)	8.6	> 99.99	Pilot-scale multiple chamber	Midwest Research Institute
	75	(WP)	2.3 (5.1)c/	151	940((1730)	3.5	> 99.99		

a/ B = bait; D = dust; EC = emulsifiable concentrate; FC = flowable concentrate; G = granular; K = in kerosene; OS = oil solution; P = pellets; PS = polyalcohol solution; WB = water base liquid; and WP = wettable powder.

b/ Retention time for MRI data are the sum of the primary and secondary chamber retention times.

c/ Quantities given in kilograms per hour (pounds per hour).

d/ Pesticide mixed with sludge fed to incinerator at rate of 45 kg/hr (100 lb/hr).

e/ Kepone® (4 kg maximum sample size) was mixed with sewage sludge fed to incinerator.

Then, the impacts of toxic stack gas emissions and waste pesticides transported from the facility prior to incineration are discussed for air quality, water quality, and soil quality.

Toxic Products of Pesticide Incineration--

Pesticides represent a wide variety of chemical substances formulated into numerous products in different physical states. Incineration of a diversity of waste pesticides can be expected to generate gaseous products, particulates, and ash residues of many types. Gases (e.g., carbon monoxide, nitrogen oxides, sulfur dioxide, elemental halogens, hydrogen halides, smoke, and particulates) as well as ash residues containing alkali, alkaline earths, and heavy metal salts and oxides may be produced in an efficient pesticide incineration operation. When the incinerator is inadequately designed or operated, or malfunctions, other toxic inorganic gases such as hydrogen sulfide, ammonia, and hydrogen cyanide and unburned volatile pesticides and products of incomplete combustion or pyrolysis may be produced.

Both laboratory- and pilot-scale incinerations of organic pesticides under optimum operating conditions have produced hydrogen chloride, nitrogen oxides, phosphorus pentoxide, and sulfur dioxide from combustion of chlorine-, nitrogen-, phosphorus-, and sulfur-containing compounds. Sulfur dioxide was found in most emissions because of the sulfur in the auxiliary petroleum fuel often used or in formulation adjuvants. Nitric oxide is a product common to high temperature combustions above 1100°C (2012°F). Hydrogen cyanide can be formed when incinerating nitrogen-containing pesticides, and methane, other hydrocarbons, and carbon monoxide are sometimes found in the gaseous product. Particulates are often emitted in large amounts when solid formations are incinerated.

Inorganic pesticides, such as ammonium sulfamate, elemental sulfur, and ammonium thiocyanate, may be components of combustible pesticide mixtures to be incinerated or, in some cases, may be incinerated directly to dispose of them. The resultant flue gas and ash constituents of burning these pesticides could result in sulfur dioxide and other hazardous substances, depending upon the pesticide being incinerated and the operating conditions.

The uncontrolled release of the above chemical substances into the environment poses a serious threat to the quality of the air, water, soil, and animal and plant life.

Air Quality--

Pesticide incineration operations can adversely affect air quality in two ways: by stack gas emission and from waste pesticide dusts and vapors being transported by the wind during unloading and handling operations prior to incineration. By far the more serious impact comes from stack gas emissions containing toxic gases, vapors, mists, and particulates. Volatilization, sublimation, or wind transport of the pesticides prior to incineration are lesser impacts which may also result.

Pesticide incineration operations emit large volumes of stack gases into the air and have the potential for serious environmental damage if the emissions are not properly controlled. Many of the toxic substances mentioned above would be emitted in excessive amounts and would contaminate the air. Emissions would be more severe during periods of operational malfunctioning when unburned pesticides and partial combustion products are emitted and during periods of adverse meteorological conditions such as thermal inversions and low wind speeds. Incinerators which are improperly designed, which operate with inadequate pollution control devices, or which are used for the wrong types or excessive quantities of pesticides would also create adverse impacts on air quality.

Impacts of polluted stack emissions on air quality would probably be short-term if the cause were operational abnormalities of infrequent and short duration. Long-term impacts would result if gross emissions of prolonged and frequent periods of pollution were created by improperly designed and controlled incinerators. The consequences of both short- and long-term impacts would depend upon the chemical nature of the pollutant and the assimilative and dissipative capacities of the air environment.

These impacts can be largely mitigated by the use of efficient pollution controls for the known kinds of waste pesticides to be incinerated; by monitoring devices that detect and warn of excessive pollutant emissions indicating performance irregularities; and by strict observance of acceptable operating procedures which restrict the types and quantities of pesticides incinerated only to those for which the incinerator was designed, insuring that combustion efficiencies and stack gas compositions are maintained at specified levels of acceptability.

Water Quality--

Pesticide incineration operations can impact surface waters through contamination by stack gas emissions and by pesticide wastes transported by wind or storm water runoff from the facility unloading and handling areas. By far the most significant adverse impact can come from stack gas emissions containing gases, vapors, mists, and particulates which can settle on or be absorbed into nearby surface waters. Lesser impacts caused by waste pesticides being transported from the facility by wind or runoff may also result.

Water quality impacts of stack gas emissions would be more severe during periods of operational malfunctioning when unburned pesticides and partial combustion products are emitted and during periods of adverse meteorological conditions such as thermal inversions and rainfall. Incinerators which are not properly designed or which operate with inadequate pollution control devices to treat the stack emissions would also create adverse impacts on the surface waters. The adsorption of toxic substances from the stack gases which contact surface waters and the settling of particulates on surface waters would contaminate the water and might impair its usefulness for agriculture, for domestic and recreational purposes, and for aquatic life habitats.

In addition to surface water contamination by stack gases, the surface and groundwaters could be contaminated by storm water runoff containing pesticides from ground spills, leaking containers, and by vapors and dusts transported by wind from the facility to nearby surface waters.

Impacts of polluted stack emissions and contaminated storm runoff on water quality would probably be short-term if the causes were operational malfunctions of short and infrequent duration of the incinerator, or brief storm runoff episodes. Long-term impacts would result if gross emissions of prolonged and frequent periods of pollution were created by improperly designed and controlled incinerators or if excessive spills and improper handling of waste pesticides resulted in the continuous exposure of the surrounding surface and groundwaters to contaminated storm water runoff. The consequences of both short-term and long-term impacts would depend upon the chemical nature of the pollutants and the assimilative and dissipative capacities of the surrounding waters.

Soil Quality--

Soil areas around an incinerator facility would be exposed to the same pollutants and in the same manner as would the surface waters, that is, contamination by stack gas emissions and waste pesticides transported by wind and storm runoff. Mitigation of these impacts would be achieved by the same countermeasures suggested in the preceding sections on air and water quality. The nature of these impacts, both short-term and long-term, merits further description.

Soil quality would be adversely affected primarily through the loss of vegetative cover. Many plants exposed to phytotoxic pesticides in stack gas emissions at significant levels during incinerator malfunction would be destroyed. Of even greater concern would be the low level exposure of plants to inorganic combustion gases and particulates not completely scrubbed from stack gases under normal operating conditions. Many plants are sensitive and can be acutely injured by exposures to low concentrations of sulfur dioxide, nitrogen dioxide, fluorides, chlorides, aliphatic hydrocarbons, and other compounds commonly found in stack gases of pesticide incinerators. Herbicides transported by wind and storm runoff would also destroy vegetative cover.

Destruction of vegetative cover would lead to drastic reductions or changes in soil organism populations essential to soil quality and productive capacity through loss of habitat and food supply. Uncovered soil would be exposed to the direct effects and action of the sun, wind, and rains and would be subject to accelerated loss of moisture, leaching of essential elements, and erosion, with the loss of productive top soil and alteration of drainfield capacity and patterns.

These impacts would be essentially short-term, possibly a growing season, if pollution incidents were infrequent or not repeated. However, the potential

for long-term soil impacts, which may be irreversible, would be great in the case of prolonged exposure to low-level pollutants.

Potential Economic Impacts

The capital and operating costs of pesticide incineration facilities can only be estimated since there are many variables involved. Capital costs will vary widely from one facility to another since they are dependent upon variables such as installation, land, feed capacity, materials of construction, feed systems, pollution control systems, etc. The feed system costs can be substantial if several physical forms (liquids, solids, sludges) are processed in a single incinerator. The required pollution control system will depend upon the types of pesticides to be incinerated, the resultant gaseous emissions, and the regulated emission limits. The cost of the system will increase substantially as the degree of complexity and sophistication increases.

Operating costs will also vary widely for different facilities since cost variables such as labor rates, utility and energy usage, equipment lifetimes, down-time, ash disposal, scrubber water treatment and disposal, and plant overhead are involved. Each of these costs (except labor rates) is dependent to a large degree upon not only the type of incineration facility but the types, physical forms, and quantities of pesticides to be incinerated.

Scurlock et al. (1975) reported the capital and operating costs for hazardous waste incineration for various types of incinerators. Capital costs ranged from $2,000 to $20,000 per daily ton of capacity, and operating costs ranged from $3 to $55 per ton of waste incinerated. The capital costs, however, were generally for the installed incinerator and did not include such items as pollution control equipment, land, feed systems, and other facility costs. The operating costs were not specific as to what cost items were included in the estimates. Dollar figures were not specified as to year, and the ranges used were wide. Still, these estimates indicate that incineration costs are high, particularly if the high side of the cost range is used to allow for costs not included in the estimates.

Since incineration costs depend on many variables whose values are indeterminant for pesticide disposal operations, it is impossible to estimate costs that have any meaning until more is known about the facilities that will be required to incinerate pesticides. The estimates made by Scurlock et al. (1975) give some indication as to the magnitude of the costs.

The EPA is currently evaluating the economic impacts of the implementation of regulations promulgated under Subtitle C of the Resource Conservation and Recovery Act of 1976 (EPA, 1978). These regulations will deal with the disposal of hazardous waste materials. As part of this assessment, a series of economic

analyses are being conducted. The results of this study will provide much of the needed data on the economic costs of incineration as well as other methods of disposal.

FUTURE RESEARCH NEEDS

A review of the past and current pesticide incineration research and development presented previously and Tables 2 and 3 suggest that the information and data base for pesticide incineration is quite limited for a group of compounds that includes about 550 different pesticide AI's and about 24,000 different formulations; for a technology which offers a wide variety of incineration devices; and for a technology offering a wide variety of emission-control devices. Few data have been generated for various chemical classes of pesticides, for several types of commercial-scale incinerators, or for readily available pollution control devices.

These technology gaps can only be bridged in the future by conducting more research in specific areas. The questions listed below highlight areas where data are incomplete or absent from the present body of knowledge of pesticide incineration operations.

* Which pesticides and their formulations can be safely incinerated, and which cannot? How can heavy metals be removed from certain pesticides prior to incineration? Can pesticide containers be safely incinerated?

* What are the necessary operating conditions for commercial-scale incinerators to destroy pesticides effectively and efficiently? How do these operating conditions vary for different pesticides and different formulations? Which types of incinerators offer the most advantages for pesticide disposal? How much will these methods cost?

* What toxic substances are generated by the incineration of specific pesticides and specific formulations? Are they gases, vapors, mists, or particulates? Are they found in the flue gases or ash? What quantities are present? How toxic are they to man and his environment?

* What existing pollution-control devices are effective in removing specific pollutants from flue gas streams? Which devices should be used for which pollutants? Should scrubber water be acid, alkaline, or neutral? What characteristics, such as size, capacity, materials of construction, etc., should these devices have for different pesticides? What will these devices cost in relation to the effectiveness they achieve?

* Should regulations and guidelines on emission limits from pesticide incinerators be federal or local? Should standards be set for all pesticides and all pollutants, or just for those that are the most toxic to man and his environment? What are the economic trade-offs between very stringent standards and less stringent standards? Can suggested standards be met with present technology, or will further research and development be required in incineration and pollution control technology?

Future research and development should be directed toward answering these questions and should be conducted by augmenting past and current research, and by conducting studies in areas which have received little or no attention to date. Needed activities include:

(1) Expand the data base on pesticide incineration: Too much of the past research has been concerned with the incineration of chlorinated hydrocarbons, particularily DDT and Herbicide Orange. Few studies which examine the other chemical classes of pesticides have been conducted. The MSU study and the MRI study examined various classes of pesticides but only on a laboratory- and pilot-scale level.

Future research is needed to broaden the data base on pesticide incineration characteristics for more classes of compounds, such as anilides, ureas, uracils, nitrated hydrocarbons, organophosphates, triazines, and carbamates, and at the same time, to examine representative pesticides within these classes, since most of the classes contain a wide diversity of individual compounds.

(2) Conduct more commercial-scale incineration studies: This review of past and current research reveals that little pesticide incineration research has been conducted in commercial readily available and commonly used incinerators. Little is known about pesticide destruction efficiencies, incinerator operating parameters, etc., for commercial-scale incinerators, with the exception of DDT. Unless future research is conducted in commercial facilities, the circumstances of full-scale incineration operations will only be extrapolations of pilot-scale studies. Generalized operating guidelines for pesticide incineration, such as those developed in the MRI study (Ferguson, 1975), must be verified (or revised) by additional full-scale testing.

(3) Determine specific products of pesticide incineration: Research aimed at expanding the data base and utilizing commercial incinerators must determine not only the efficient operating conditions of the incinerator but the specific products created under various conditions and for various pesticides. The discussion in Section 4 of this report on the toxic substances which may be produced from incinerating various pesticides and formulations shows that a wide variety of toxic substances may be created and become a part of the stack gases, pollution control collections, or ash residues.

Until the types, quantities, physical states, and properties of toxic products of pesticide incineration are determined for the various chemical classes and formulations, little can be done to assess the significance of environmental pollution, to design and operate appropriate pollution control devices, or to establish regulations and guidelines for ambient air limits for pesticide incineration operations.

(4) Test pollution control devices for control of specific pollutants: Most studies conducted to date have generated few data on the ability of specific types of pollution control devices to control specific toxic pollutants. The ability of pollution control devices to control a wide range of gas, vapor, mist, and particulate emissions in both pilot-scale and commercial facilities must be determined.

(5) Determine the capital and operating costs of pesticide incineration: After more research and development has been performed on pesticide incineration technology and after incineration facilities have been defined in more detail as to their construction and operation, it will be necessary to estimate and determine the capital and operating costs of pesticide incineration. These estimates should include cost comparisons between alternate pollution control systems to determine the environmental and economic trade-offs of pesticide incineration techniques.

REFERENCES

Babbitt, R. The Marquardt Company. Personal communication to G. Kelso. May 5, 1978.

Carnes, R. A., EPA/MERL, Cincinnati, Ohio. Personal communication to R. Wilkinson, Sept. 14, 1977.

Chemical and Engineering News, p. 20, Mar. 14, 1977a.

Chemical and Engineering News, p. 20, Sept. 12, 1977b.

Chemical Engineering, p. 61, Mar. 28, 1977.

Duvall, D. S., and W. A. Rubey. Laboratory Evaluation of High Temperature Destruction of Kepone® and Related Pesticides. Tech. Rep. UDRI-TR-76-21. University of Dayton Research Institute. EPA-600/2-76-299, May 1976.

Environmental Protection Agency. Regulations for Acceptance and Recommended Procedures for Disposal and Storage. Federal Register, 39(85):Part IV, May 1, 1974.

Environmental Protection Agency. Preliminary Working Draft: Environmental Impact Statement for Subtitle C, Resource Conservation and Recovery Act of 1976 (RCRA). Volume 1, Feb. 7, 1978.

Environmental Sciences and Technology, 11(3):236-237, 1977.

Ferguson, T. L., F. J. Bergman, G. R. Cooper, R. T. Li, and F. I. Honea. Determination of Incinerator Operating Conditions Necessary for Safe Disposal of Pesticides. EPA-600/2-75-041, Dec. 1975.

Holloman, M. E., B. R. Layton, M. V. Kennedy, and C. R. Swanson. Identification of the Major Thermal Degradation Products of the Insecticide Mirex. J. Agr. Food Chem., 23(5):1011-1012, 1975.

Holloman, M. E., F.Y. Hutto, M. V. Kennedy, and C. R. Swanson. Thermal Degradation of Selected Chlorinated Herbicides. J. Agr. Food Chem., 24(6):1194-1198, 1976.

Kansas City Times, p. 13A, Sept. 8, 1977.

Kelso, G. L., R. R. Wilkinson, T. L. Ferguson, and J. D. Maloney, Jr. Development of Information on Pesticides Manufacturing for Source Assessment. EPA Contract No. 68-02-1324, Task 43, July 30, 1976.

Kennedy, M. V., B. J. Stojanovic, and F. L. Shuman, Jr. Chemical and Thermal Methods for Disposal of Pesticides. Res. Rev., 29:89, 1969.

Kennedy, M. V., B. J. Stojanovic, and F. L. Shuman, Jr. Chemical and Thermal Aspects of Pesticide Disposal. J. Environ. Quality, 1(1):63, Jan.-Mar. 1972a.

Kennedy, M. V., B. J. Stojanovic, and F. L. Shuman, Jr. Analysis of Decomposition Products of Pesticides. J. Agr. Food Chem., 20(2):341, 1972b.

Lee, G. K., F. D. Freidrich, B. C. Post, and H. Whaley. The Thermal Destruction of DDT-Bearing Powders. Canadian Combustion Research Laboratory, Room 234, Jan. 1971.

Leighton, I. W., and J. B. Feldman. Demonstration Test Burn of DDT in General Electric's Liquid Injection Incinerator. U.S. Environmental Protection Agency, 1975.

Maritime Administration. Chemical Waste Incinerator Ship Project. U.S. Department of Commerce, NTIS PB-246 727, 1975.

Montgomery, W. L., B. G. Cameron, and W. S. Weaver. The Thermal Destructor. Defense Research Establishment Suffield, R270, Oct. 1971.

Münnecke, D., H. R. Day, and H. W. Trask. Review of Pesticide Disposal Research. Rep. No. SW-527. U.S. Environmental Protection Agency, 1976.

Ottinger, R. S., J. L. Blumenthal, D. F. Dal Porto, G. I. Gruber, M. J. Santy, and C. C. Shih. Recommended Methods of Reduction, Neutralization, Recovery, or Disposal of Hazardous Waste. NTIS PB-224 582, Volume 3, Aug. 1973.

Pesticide and Toxic Materials News. p. 33, Aug. 10, 1977.

Putnam, R. C., F. Ellison, R. Protzmann, and J. Hilovsky. Organic Pesticides and Pesticide Containers. Rep. No. EPA-SW-21C-71, Foster D. Snell, Inc., Florham Park, New Jersey, 1971.

Rosen, H. H. Pesticide Pyrolysis Device. Tech. Rep. No. 74-89. U.S. Army Land Warfare Laboratory, Aberdeen Proving Ground, Maryland, 1974.

Riley, B. T. Summation of Conditions and Investigations for the Complete Combustion of Organic Pesticides. U.S. Environmental Protection Agency Municipal Environmental Research Laboratory, EPA-600/2-75-044, Oct. 1975.

Scott, R. C., Vice President of Administration, Chemagro Agricultural Division, Mobay Chemical Corporation. Personal communication to R. Wilkinson, Oct. 21, 1977.

Scurlock, A. C., A. W. Lindsey, T. Fields, Jr., and D. R. Huber. Incineration in Hazardous Waste Management. U.S. Environmental Protection Agency, NTIS PB-261 049, 1975.

Shih, C. C., R. F. Tobias, J. F. Clausen, and R. J. Johnson. Thermal Degradation of Military Standard Pesticide Formulations. TRW Systems Group, Redondo Beach, California, Mar. 1975.

Stojanovic, B. J., M. V. Kennedy, and F. L. Shuman, Jr. Development of Incineration Technology for Disposal of Pesticide Wastes and Containers. Mississippi Agricultural and Forestry Experiment Station, USDA Grant No. 12-14-100-9937(34), June 1972a (unpublished information).

Stojanovic, B. J., F. Hutto, M. V. Kennedy, and F. L. Shuman, Jr. Mild Thermal Degradation of Pesticides J. Environ. Quality. 1(4):397, 1972b.

Tenzer, R. E., Program Manager, MB Associates, Inc. Personal communication to R. Wilkinson, Feb. 17, 1978.

U.S. Patent No. 3,701,355. Chemagro Agricultural Division, Mobay Chemical Company, Filed Nov. 24, 1971.

Wastler, T. A., C. K. Offutt, C. K. Fitzsimmons, and P. E. Des Rosiers. Disposal of Organochlorine Wastes by Incineration at Sea. NTIS PB-253 979, July 1975.

Whitmore, F. C. A Study of Pesticide Disposal in a Sewage Sludge Incinerator. EPA/530/SW-116c, Versar, Inc., Springfield, Virginia, 1975.

SECTION 5

BIOLOGICAL METHODS

INTRODUCTION

Biological methods offer an interesting approach to pesticide disposal. Biological treatment of municipal and industrial waste is common, but very little information on the applicability of this methodology to the elimination of unwanted pesticides is available. The potential for such applications is discussed in this section.

Biological disposal methods may be employed to reduce or eliminate any "biodegradable" pesticide waste. The refuse must normally be an organic compound so that it may serve as a carbon source for microorganisms. But this statement is not absolute since inorganic compounds containing valuable nutrients--notably nitrogen compounds--may also be attacked through biological processes. Obviously, the microorganisms involved must be able to tolerate the toxic properties of the unwanted pesticide or hazardous material, at least at dilute concentrations.

Conditions necessary for degradation vary according to the nature of the disposal system and the active organisms. Neither pH nor temperature may be extremely high or low in the systems that have been evaluated. (Specific values accompany the abstracts and discussion of individual processes.) Oxygen levels are maintained as high as possible for aerobic treatment systems. Conversely, anaerobic systems require the absence of oxygen, and a readily accessible carbon source, typically methanol, is added to aid metabolism. The absence of toxic metals is essential in all cases that have been tested.

An aqueous medium is used in activated sludge (biomass), anaerobic digestion, trickling filter, oxygenated lagoons, and practically all systems common to industrial biological treatment (Atkins, 1972; Gruber, 1975; Gurnham, 1965; Todd, 1970). If the waste mixes easily with water, contact with the active microbes will be accelerated. Biodegradation in soil is also possible with soil incorporation methods (Sanborn et al., 1977).

The microbes used in biodegradation processes form complex communities consisting of saprophytic bacteria, fungi, and protozoa with a complement of autotrophic organisms. The primary organisms are species that are indigenous to soil and sewage, or mutant strains thereof.

Some recently developed systems duplicate or enhance the functions of traditional biological treatment methods and provide information helpful in an analysis of the potential for biodetoxification of pesticides. Four laboratory-scale projects and three commercial developments have been examined. The following discussion of these developments is organized into the four areas: (1) a description of the traditional techniques available for biological treatment of wastes; (2) an evaluation of related research and recent commercial developments specific to the detoxification of pesticides; (3) an environmental and economic assesment; and (4) future research needs.

TRADITIONAL BIOLOGICAL DISPOSAL METHODS

Five of the most widely used methods available for the biological disposal of pesticides are:

* Activated Sludge
* Trickling Filter
* Oxidation Lagoon
* Anaerobic Digestion
* Soil Incorporation

A short discussion of each of these methods follows.

The activated sludge process consists of aerating the waste stream in the presence of recycled activated sludge or biomass. This sludge is a source of acclimated organisms which accelerate the biodegradation of the unwanted substance.

A trickling filter is a bed of gravel or synthetic medium on which the waste stream is sprayed and allowed to trickle through. Good air contact is achieved without high energy costs, and a film of biological growth attaches itself to the medium. Such a process is frequently a preliminary stage in waste treatment. Trickling filters are not as effective as activated sludge but are less sensitive to shock loads.

An oxidation lagoon is somewhat similar to an activated sludge process without the sludge return. However, sunlight is necessary for proper operation. The conversion of CO_2 to O_2 by photosynthetic algae is an important part of the process. The system works slower than activated sludge and requires greater space.

Anaerobic digestion is different from the other methods described, as is suggested by its name. No oxygenation of the digesting fluid takes place. No new research applicable to pesticide disposal has been encountered in this area; for this reason, only passing references to anaerobic digestion are made in the biodetoxification discussion.

Soil incorporation involves spraying the waste on or tilling it into a land surface. In the topsoil zone the pesticide is then available for biodetoxification. Because of the overlap with the land disposal section, this methodology is discussed fully in Section 7.

RESEARCH AND DEVELOPMENT

Much of the research to date on pesticide biodegradation has focused on the loss of toxicity under agricultural application and runoff conditions (Sanborn et al., 1977). Little of this work, however, carries over into the realm of pesticide disposal. The large number of variables involved in microbial breakdown tends to make each piece of research approach unique, e.g., chemical, temperature, pH, moisture content, organic composition, and soil or media type. Even when all of these variables are carefully controlled in a laboratory apparatus, results have questionable value for the operation of landfills and industrial treatment facilities where complete control is not technically or economically feasible.

The most promising methods of biodetoxification involve wastewater treatment systems. The research and development activities that are presently underway in this area, therefore, dominate the following discussion.

The research and development discussion is divided into two areas: (1) laboratory research; and (2) recent developments of commercial waste treatment systems with potential for pesticide disposal.

Laboratory Research

Current laboratory work with applications to the problems of pesticide disposal includes:

* Activated Sludge Simulation

* Micropit Disposal

* Tapered Fluidized Bed Reactor

* Use of Immobilized Enzymes

Activated Sludge Simulation--

The Utah State College of Engineering Water Research Laboratory recently conducted tests on the biodegradation of 2,4-D and 2,4,5-T under a contract with the U.S. Air Force (Wachinski et al., 1974). The purpose of the study was to evaluate the feasibility of using an activated sludge process to dispose of 8.7 million liters (2.3 million gallons) of surplus Herbicide Orange (a 50:50 mixture of 2,4-D and 2,4,5-T).

The experiments were performed in laboratory-scale equipment. Aqueous systems containing 230, 1,380, and 3,450 mg/liter of the 2,4-D and 2,4,5-T mixtures were seeded with sewage, soil, and Phenobac™,[a] respectively. Because the soil was taken from an Air Force biodegradation test plot with prior Herbicide Orange contact, it was expected to provide organisms naturally adapted for herbicide breakdown. The apparatus design excluded the possibility of volatile losses during the 16-day test period.

The results (gas chromatograph data) are summarized in Table 4. The sewage seed was able to degrade only 13% of the most dilute sample. The adapted soil showed more activity but was also unable to effect any change in the most concentrated samples (3,450 mg/liter). Phenobac™ demonstrated a significant reduction in all samples (64 to 73%). Incubation temperature was 18°C. The performance by the Phenobac™ seed would presumably have been even better if the samples had been incubated at the producer's optimum growth temperature, 30°C.

TABLE 4. SUMMARY OF HERBICIDE ORANGE BIODEGRADATION LABORATORY RESULTS

Total 2,4-D and 2,4,5-T (mg/ℓ)	Degradation of pesticide active ingredient after 16 days (%)		
	Sewage	soil	Phenobac™
230	13	27	69
1,380	-	47	73
3,450	-	-	64

Source: Adapted from Wachinski et al. (1974).

a/ Phenobac™ is a commercial, freeze-dried bacterial inoculum, which degrades phenolic materials. Phenobac™ is described more fully on pp. 76-79.

This method of disposal, however, was not used. The surplus herbicide was subsequently incinerated at sea on the M/T Vulcanus. As a result, a full-scale activated sludge operation specifically designed for pesticide disposal remains untried, with the possible exception of proprietary industrial processes (Atkins, 1972; von Rümker et al., 1974). However, the researchers involved in the Utah study remain convinced that they have produced a workable plant design (Adams, 1977).

Micropit Disposal--

Another research project which shows some promise in the biodetoxification field was initiated early in 1977 at Iowa State University (Hall, 1977). The objective of this ongoing project is to determine the feasibility of disposing of pesticides by direct microbial action in small, self-contained disposal pits suitable for use by farmers and applicators. Three major areas of this effort are described.

The first portion of the research project is under way at the Horticulture Research Station, where a 7-year-old concrete disposal pit filled with alternate layers of gravel and soil is being monitored for biological activity and chemical degradation of applied pesticides. Four new micropits designed to simulate the old pit and facilitate sampling have been added at the site. These pits are all operating under "real world" circumstances with a variety of pesticide compounds and formulations being introduced into each. For example, the "fruit" pit receives all of the various pesticide rinse waters and wastes from the care of the fruit trees at the horticulture station. Figures 13 and 14 present details of the micro disposal pits and also the original macropit.

The four micropits are labeled in the diagram according to the plants whose care generated the pesticide waste. Macropit depth ranges from 0.9 m (3 ft) at the west end to 1.2 m (4 ft) at the east end.

A second group of similar micropit experiments is being conducted at the Agricultural Engineering-Agronomy Research Center, where an array of 56 micropits (having a slightly different design than those at the Horticulture Station) are utilized to dispose of specific, commercially available formulations. The six pesticides under examination are atrazine, alachlor, 2,4-D butoxyethanol ester, trifluralin, carbaryl, and parathion. Concentrations of 0.5 and 0.025% AI (w/w) are included in the testing. Other variables in the experimental design are aeration at 1 liter/min and nutrient addition providing 0.1% peptone (w/v). The contents of these pits are also monitored at regular intervals for microorganisms and residual chemicals.

The third portion of the research, which is discussed here, is a laboratory study designed to determine the degree of pesticide loss from aqueous solution due to volatility. This effort complements the field studies by providing data on the importance of volatilization in the reduction of pesticide

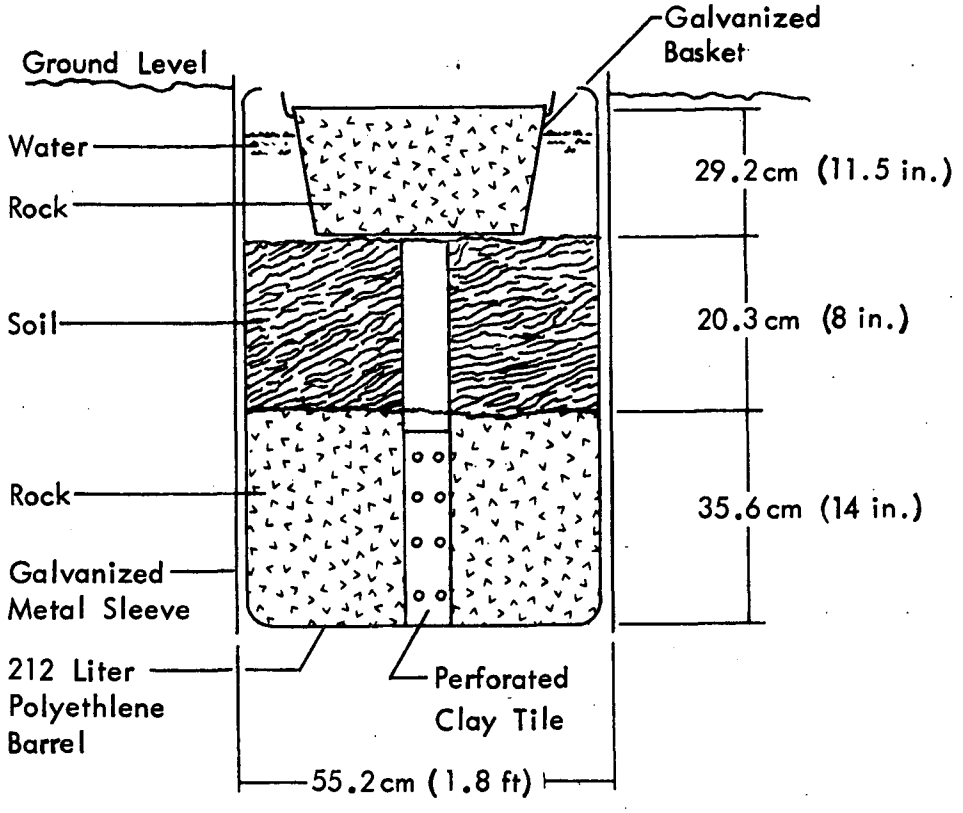

BASKET is galvanized (Electro-plated), one bushel capacity and has had 75-80 1.1 cm (7/16-") holes drilled in bottom. Bottom of basket is lined with 0.63 cm (1/4") galvanized mesh.

TILE have two rows of holes each. Holes face west on Bottom tile, east on Top tile. Top tile has been cut down to 24.8 cm (9 3/4") from 31.2 cm (12 1/4"). Tile are 10.2 cm (4") I.D.
ROCK is 4.4 cm (1 3/4") mixed gravel.

Source: Adapted from Freiburger (1977) and Iowa State University (1977).

Figure 13. Internal view of pesticide micropit.

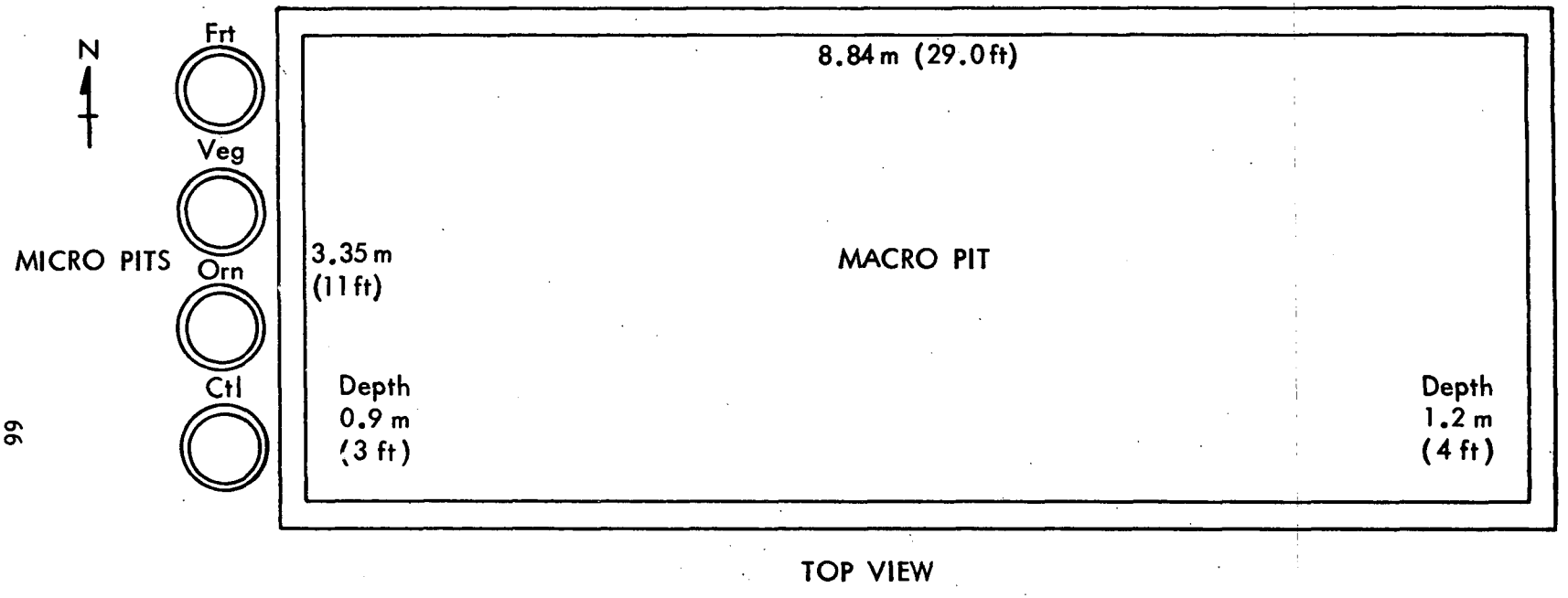

Frt - Fruit
Veg - Vegetable
Orn - Ornamental
Ctl - Control

Source: Adapted from Freiburger (1977) and Iowa State University (1977).

Figure 14. Iowa State University Horticulture Station Disposal Pits.

levels in the micropits. The experimental variables include temperature, relative humidity, and aeration.

Preliminary work has been done on atrazine, alachlor, and propachlor. Results indicate that, of these three, atrazine is the most apt to volatilize under the experimental conditions. Air leaving the test device (1 liter/min, 25°C) contains 1,250 to 1,480 ng/liter of atrazine. Neither relative humidity changes nor aeration has any significant effect on atrazine volatility. However, aeration (and, to a lesser extent, low humidity) does enhance the volatility of the other two substances, especially alachlor (Baker, 1977).

Tapered Fluidized Bed Reactor--

Scientists at the Oak Ridge National Laboratory (ORNL) in Oak Ridge, Tennessee, have developed a tapered fluidized bed bioreactor. Various modifications of the system have been applied to enzymatic production of hydrogen gas, microbiological denitrification, and microbiological degradation of coal conversion aqueous waste--hydrogen sulfide, ammonia, phenols, thiocyanates, and other hydrocarbons (Lee and Scott, 1977; Hancher, 1977). The similarities between the treated chemicals and some pesticides, combined with the apparent success of the method, justify an examination of this research.

The primary structural component of the system is a column whose lower end is cone-shaped (see Figure 15). Waste material is introduced at the bottom and follows the tapered walls rotating toward an outflow near the top of the chamber. The "fluidized bed" is composed of coal particles 0.04 to 0.07 cm (0.02 to 0.03 in. in diameter). These particles are lifted from the bottom of the reactor by influx of an aeration gas stream. The tapered shape of the reactor places the greatest velocity on the coal particle at the narrow tip of the chamber and prevents any of the particles from settling to the bottom. The widening of the upper portion of the reactor slows the motion within the fluid and allows only the most buoyant particles--which are overgrown to the point where they occupy more space than is warranted by the surface area they provide--to reach the outflow. The coal is thereby suspended in the waste liquid and serves as a substrate for the growth of the desired organisms or the immobilization of an enzyme (Scott and Hancher, 1976).

The microorganisms for the ORNL experiments have been obtained from several sources. Local soils have provided an effective mixed culture, including valuable pseudomonad species. In the experiments studying the degradation of coal conversion waste, a commercial bacterial seed (Phenobac™) was utilized.

Most of the experiments at ORNL have been carried out with bench-scale apparatus in glass-walled chambers. The largest reactor constructed to date is a stainless steel 4.3-m (14-ft) column with a maximum internal diameter of 0.30 m (1 ft). This tapered bioreactor has demonstrated the ability to reduce a 100 mg/liter solution of NH_4NO_3 to 10 mg/liter at a rate of 75 to 115 liter/min (20 to 30 gal/min).

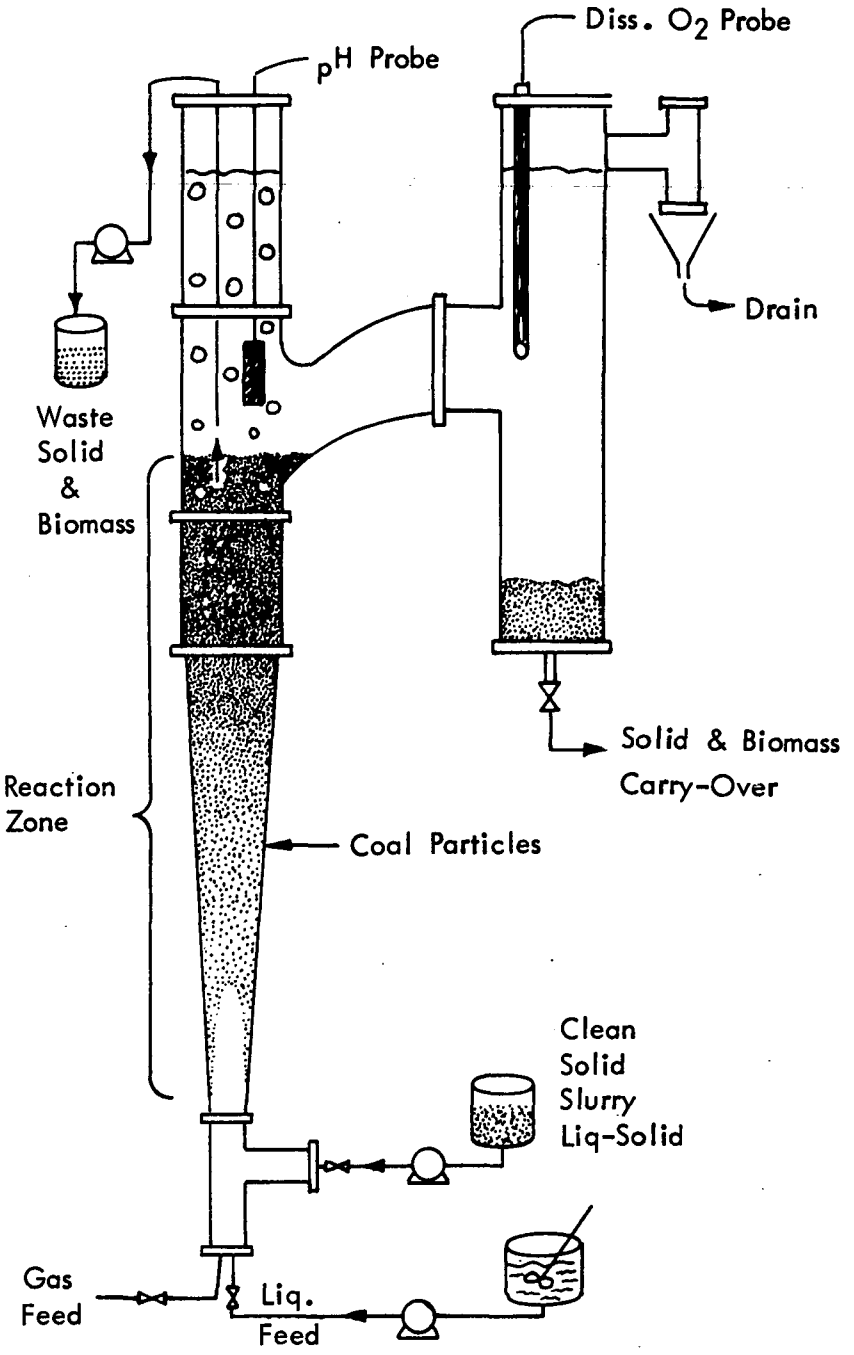

Source: Adapted from Lee and Scott (1977).

Figure 15. Schematic of tapered fluidized-bed bioreactor system.

Use of Immobilized Enzymes--

Some important laboratory-scale work has been performed by Dr. Douglas Münnecke, formerly with the EPA (Münnecke, 1977; Münnecke and Hsieh, 1975). Emulsifiable parathion was the sole carbon and energy source for mixed bacterial culture grown from sewage, soil, and water samples. After a 36-day adaptation period, the culture exhibited maximum growth in a solution containing 5,000 mg/liter parathion and showed only a slight decrease in activity when the parathion concentration was raised to 10,000 mg/liter. This higher level represents an approximation of the concentrations present in wash solutions from pesticide containers and aircraft spray tanks (Hsieh et al., 1972). Three different biochemical pathways were used by the culture to attack the emulsifiable parathion under aerobic or low oxygen conditions. The active organisms included five subclasses of fluorescent pseudomonads, plus species of Brevibacterium, Azotomonas, and Xanthomonas. The maximum concentration rate of degradation was 50 mg parathion/liter per hour.

The success of the culture was, in part, caused by the production of the enzyme, parathion hydrolase. This enzyme was separated from the active cells and found to be tolerant of high temperatures (55°C [131°F] for 10 min without deactivation) and suitable for substrate induction. The mixed bacterial culture demonstrated the ability to hydrolyze seven of eight tested organophosphate insecticides. Only fenthion (Lebaycid®) with three different functional groups was not hydrolyzed. Depending on the pesticide, biochemical detoxification rates when using 20 mg protein/liter were 11 to 2,450 times faster than in chemical detoxification procedures using 0.1N NaOH.

The significance of this series of experiments may be summarized as follows: (1) a toxic organophosphate insecticide, parathion, was successfully biodegraded to simpler phosphoric acids and phenols; (2) the microbial enzyme produced was able to degrade eight additional organophosphate pesticides; and (3) the enzyme which was capable of hydrolyzing these pesticides was isolated and found to be stable outside the parent cell.

Subsequently, Münnecke continued to study the potential use of enzymes in a pesticide disposal method. This further effort utilized immobilized enzymes produced, as previously discussed, by the growth of a mixed bacterial culture on a parathion substrate (Münnecke, 1977). Münnecke immobilized the desired enzymes on Jena laboratory glass using the azide coupling method of Mason and Weetal (1972). The hydrolase preparation was then placed in columns to evaluate its ability to hydrolyze organophosphate solutions and test its response to fluctuations in pH and temperature.

Results showed that the system was capable of hydrolyzing nine organophosphates including triazophos and EPN. The immobilized enzymes showed a broad pH optimum between 8.5 and 9.5, similar to the behavior of the free enzyme. Stability under the influence of temperature change was also found to be about

the same as had been previously observed in the free enzymes. However, the immobilized preparation was slightly more stable than the free enzymes at temperatures beyond 45°C.

From 1976 to the summer of 1978 Dr. Münnecke worked with Bayer Farbenfabriken of Leverkusen, West Germany, to determine the feasibility of using immobilized or free enzymes for the detoxification of industrial pesticide production wastes. Preliminary results showed that free enzymes can be used to detoxify parathion in formulations and production wastewaters as well as in pesticide containers. Current research is in progress to scale up to 40,000 liters of batch fermentations of mixed bacterial cultures.

Promising Commercial Technologies

Several new biological disposal systems have been developed which duplicate or enhance the functions of trickle filters or activated sludge reactors and require much less space. Three of the systems are:

* Rotating Disc

* Fluidized Bed Reactor Treatment

* Mutant Bacterial Inoculum

The developers of each of these processes claim the ability to handle any biodegradable waste (Antonie, 1977; Hancher, 1977; Owens, 1977; Zitrides, 1977). Considering the evidence demonstrating the successful biodegradation of phenolic wastes (Chu and Kirsch, 1972; Cserjesi, 1967; Ide et al., 1972; and Zitrides, 1977), and the widespread use of trickle filters and activated sludge processes by the pesticide manufacturing industry (Atkins, 1972 and von Rümker et al., 1974), an examination of these new systems is justified, despite the fact that they remain largely untried as pesticide disposal techniques.

Biodisc Treatment--

Rotating disc treatment of municipal and industrial waste has been common in Europe for about 18 years (Autotrol, 1971). The basic process is a form of thin film biodegradation in which large plastic discs are half submerged in the wastewater. Aerobic microorganisms indigenous to the effluent colonize the disc surfaces and receive (maximum) oxygenation as the discs are slowly rotated. By arranging a line of discs on a single shaft and then placing many of these units in series, a well-aerated surface requiring relatively little space may be provided for biological activity.

The Biosurf™ process illustrated in Figure 16 has been employed in over 200 municipal and industrial installations across the United States and by industrial customers in Canada, Europe, and Japan (Autotrol, 1976). In many

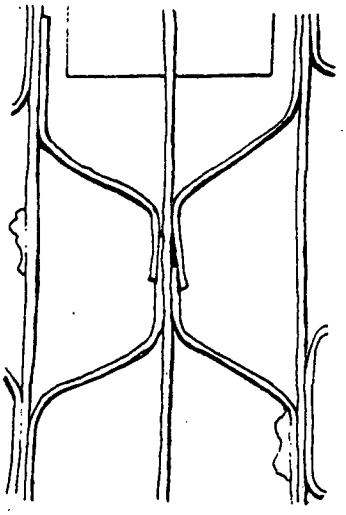

Cross section of alternating flat and corrugated polyethylene sheets in one disc.

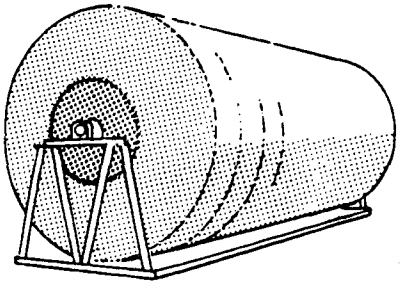

A single Bio-Surf® unit.

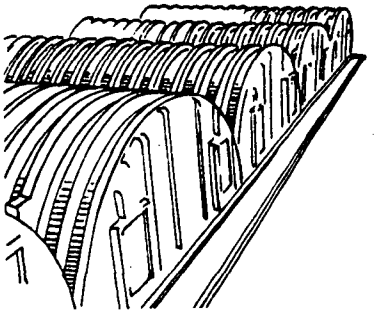

Functioning units arranged in series and enclosed by fiberglass reinforced plastic.

A schematic illustration of a Bio-Surf® wastewater treatment plant.

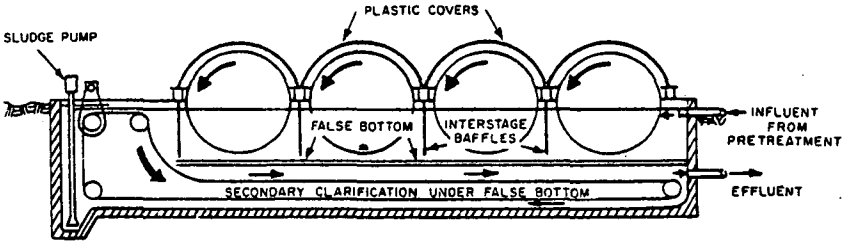

Source: Adapted from Autotrol (1976).

Figure 16. The Bio-Surf™ process.

cases the Autotrol equipment has been added to existing facilities to upgrade the effluent treatment system. Waste streams consisting of municipal sewage, refinery wastes, paper and pulp wastewater, acid mine drainage, and food processing waste have been upgraded by Biosurf™ treatment (Autotrol, 1976; Autotrol, 1974). Anaerobic conditions can be produced by enclosing a completely submerged Biosurf™ system and adding a carbon source, typically methanol (Autotrol, 1974).

Fluidized Bed Reactor--

Ecolotrol, Inc., of Bethpage, New York, is currently selling a full-scale biological fluidized bed process. In design, the Hy-Flo™ system is very similar to that of the ORNL. However, the main reactor is not tapered, and the particle growth medium is sand, not coal.

The process maintains a large population of microorganisms and makes possible more rapid treatment than conventional biological methods, i.e., activated sludge and/or trickle filter. No clarifier is required with an Ecolotrol system, and the manufacturer claims 93.0 m^2 (1,000 ft^2) of microbial surface area per every 28.1 m^3 (1,000 ft^3) of tank water (Owens, 1977). Hy-Flo™ units have been used on municipal sewage (Jeris et al., 1977) and, on a pilot scale, for processing several industrial waste streams including pharmaceutical wastes and petroleum tank truck wastes (Owens, 1977).

Mutant Bacterial Seed--

Phenobac™ is a freeze-dried, biochemical preparation containing mutant bacteria and substances to enhance their growth. The product has been developed by Worne Biochemicals, Inc., of Berlin, New Jersey, for degradation of the following compounds: benzene derivatives; phenols; cresols; naphthalenes; amines; alcohols; synthetic detergents and surfactants; lignin and cellulose derivatives; gasoline; kerosene; cyanides (properly diluted) and other toxic wastes from refineries, steel mills, pulp mills, and other chemical, textile and food processing plants (Phenobac™, 1977).

The product is marketed by the Polybac Corporation. Despite the apparent success of this microbiological technology, Polybac Corporation presently has no serious competitors (Zitrides, 1977).

The Polybac literature (Phenobac™, 1977) states that many possibilities exist for Phenobac™ use in organic chemical plants and refineries. A small portion of the technical data published by Polybac, selected for their applicability to pesticide waste streams, is shown in Table 5.

TABLE 5. BIODEGRADATION ABILITY OF PHENOBAC™ AT 30°C (86°F)

Compound and procedure	Initial concentration (mg/ℓ)	Percentage destruction	Treatment time (hr)
Halophenols (mutant pseudomonas, activated sludge)			
phenol	500	100	10
2,4-dichlorophenol	200	100	35
pentachlorophenol (PCP)	200	26	120
2,3,5-trichlorophenol	200	100	55
Aryl Amines (mutant aerobacter, oxidation lagoons)			
o-dianisidine	500	100	40
m-toluidine	500	100	10
2,4,6-trichloroaniline	500	100	30
aniline	500	100	15
Aryl Halides (mutant pseudomonas, biological filter/activated sludge)			
1,2,4,5-tetrachlorobenzene	200	80	120
1,3,5-trichlorobenzene	200	100	50
m-dichlorobenzene	200	100	30
hexachlorobenzene	200	0	120

Source: Phenobac™ (1977).

The product may be added to new or existing biological, aerobic wastewater treatment systems. A wide variety of waste stream conditions can be tolerated by Phenobac™:

pH	4.5 to 9.5
Dissolved O_2	1.0 ppm - no maximum
C/N/P ratio	100/5/1
Temperature	10 to 40°C (50 to 104°F)

One recent demonstration of the utility of Phenobac™ is offered by its performance for Mobay Chemical Company at the New Martinsville, West Virginia, location (Polybac, 1977). The New Martinsville plant produces a number of hazardous chemicals including aniline, seven organic isocyanates, and toluene-2,4-diamine (Stanford Research Institute, 1977). None of the compounds are pesticides. However, the species noted represent precursors of pesticide compounds.

Following a shutdown caused by the natural gas shortage during the winter of 1977, Mobay's activated sludge process was reduced to the point that it contained only 5% of the biomass expected during normal operation. The capacity of the plant was 21 million liters per day (5.5 million gallons per day). The waste stream contained a variety of aromatic and aliphatic organic compounds. Efforts to revive the process via the addition of sludge from a nearby plant and an easily degradable waste feed failed.

At that point, a Phenobac™ seed was introduced with the following results: the seed was initially added at a rate of 5.4 kg/million liters (50 lb/million gallons) and gradually reduced to 0.11 kg/million liters (1 lb/million gallons) as the microbial population stabilized. The plant was under control after 15 days of Phenobac™ application and fully effective after 4 weeks. Table 6 illustrates the recovery of the percent reduction by listing the change in five wastewater parameters measured in the influent of the treatment system after the problem arose and during the several months required to stabilize the process.

Further evidence of the potential value for pesticide disposal provided by a mutant bacterial seed is suggested by the fact that two of the current research efforts reviewed in the course of this study incorporated Phenobac™ in their work (Lee and Scott, 1977; Wachinski, 1974).

POTENTIAL IMPACTS

The potential environmental and economic cost impacts of biological disposal technologies are discussed below.

Potential Environmental Impacts

Due to the absence of any documented full-scale pesticide disposal operations using biological treatment, little can be said about the resulting

TABLE 6. MOBAY FACILITY RECOVERY WITH PHENOBAC™

Figures represent average values in mg/ℓ.
The introduction of Phenobac™ occurred during March.

Parameter	Month	Influent	Effluent	% Reduction
Phenol	February	11.71	2.88	74.5
	March	11.51	0.659	94.3
	April	23.39	0.433	98.1
Oil and grease	February	26.2	19.1	27.1
	March	21.1	14.6	30.5
	April	31.6	13.9	56.0
COD	February	860	574	33.3
	March	684	346	49.4
	April	717	231	67.8
BOD	February	170	83	51.2
	March	259	42	83.8
	April	312	16	94.9
TOC	February	181	116	35.9
	March	175	90	48.6
	April	228	79	65.4

Source: Adapted from Polybac (1977).

environmental problems. Volatile losses of pesticides from activated sludge or associated open-air processes would be a potential hazard, and air monitoring would be advisable. Similarly, effluent released during any period of disrupted operation could pollute the receiving waterway. Monitoring of effluents, including bioassay, is advisable. The microbial community in a pesticide treatment network presumably would not contain pathogenic organisms, thus avoiding the health hazards inherent with municipal waste management. The use of a sewage seed could eliminate this advantage. Any of the various biological methods would produce a sludge requiring disposal, probably by landfilling of the dewatered solids. The residual toxicity contained in such a waste remains undetermined. Further comments on environmental impact cannot be justified due to the inadequate data base.

Potential Economic Impacts

Though pesticide manufacturers may employ biological processes in the treatment of their waste streams, specific data describing such private operations and their associated costs are not made public. Because there are no comparable facilities in the municipal sector, cost figures representative of full-scale plants capable of treating pesticides are difficult to ascertain.

The researchers at Utah State University (Wachinski et al., 1974) designed a 7.6 million liters per day (2 million gallons per day) pure oxygen activated sludge plant. They estimated that it would cost between $1 million and $2 million to construct and operate during the 1-year period required to eliminate an 8.7 million liter (2.3 million gallon) stockpile of Herbidide Orange. The 2-acre treatment site would have included:

1. Activated sludge (with pure O_2 and Phenobac™).

2. Anaerobic digestion.

3. Sludge drying beds.

4. Activated charcoal or aerated holding pond for effluent, prior to ocean outflow.

The process was expected to produce a liquid effluent that would meet drinking water standards. It is important to note that the system never materialized and remains unproven.

The total installation charges for a Biosurf™ secondary treatment system capable of handling 38 million liters per day (10 million gallons per day) are estimated to be around $0.05/liter per day ($0.17/gallon per day) or $1.7 million (Autotrol, 1976). A plant handling 380 million liters per day (100 million gallons per day) would be a fraction of a penny less expensive per million liters per day, and a plant handling 3.8 million liters per day would be $0.026/million liters per day ($0.10/million gallons per day) more expensive. Operating expenses are not available. However, Autotrol literature indicates significant horsepower savings over conventional activated sludge processes (Autotrol, 1976).

Though not a complete process by itself, Phenobac™ may be used to seed many varieties of biological treatment systems. Costs range from $4/million liters per day ($15/million gallons per day) for a 38-million liter per day (10 million gallons per day) operation to $26/million liters per day for a 150-million liter per day (40 million gallons per day) operation.

The most prominent limitation encountered in approximating the costs for biodetoxification of pesticides is the fact that the most promising approaches--activated sludge with a mutant microbial seed, biodisc, fluidized bed--have not been given a pilot-scale trial. Another problem is the convention of rating plants by million gallons per day capacities and not specifying the concentration and nature of the example influent. A pesticide solution could not be expected to be comparable with the average municipal sewage influent.

FUTURE RESEARCH NEEDS

There are insufficient data to indicate the effectiveness of any biological method for the disposal of any pesticide on a full-scale basis. For this reason, further testing is warranted, particularly using mutant bacterial inoculum in combination with existing and newly developed treatment systems. The majority of registered pesticides have not been examined for potential biological disposal. Data are not available on the performance of a full-scale biological disposal system for pesticide wastes. The environmental impact of biological pesticide disposal due to volatile losses, sludge burial or incineration, and toxic substances in wastewater effluents remains undetermined.

This lack of data suggests that future research should be directed into six important areas. First, volatile losses from biological treatment need to be quantified and assessed. The high vapor pressures characteristic of many organic pesticides (von Rümker et al., 1974) suggest the possibility of evaporation, and aeration typical of biodetoxification processes would encourage such a tendency. Airborne escape of chemicals or their breakdown products must be controlled if they represent a health or an environmental hazard.

Second, an expanded effort in the development of the most promising techniques is warranted. Münnecke's work on the breakdown of organophosphates with immobilized enzymes (Münnecke, 1977) stands by itself as the only current

application of this methodology to pesticide disposal. Similarly, the use of mutant microbial cultures is being developed and marketed by a single company (Zitrides, 1977). (This apparent lack of cooperation and/or competition among researchers and companies may delay the arrival of the best disposal technology.)

Third, the use of pilot plants to attempt the biodegradation of pesticides is the next logical step. The performance of trickling filter/activated sludge, oxidation lagoon, rotating disc, and immobilized enzyme systems should be evaluated. Mutant microbes should also be included in the testing.

Fourth, the use of integrated disposal systems that take advantage of the best properties of different systems should be considered.

Fifth, the extent of residual toxicity in by-product sludges should be ascertained. Alternative means of disposing of such waste solids should be examined.

Sixth, the majority of classes of pesticides have not been tested to determine their susceptibility to biological disposal. Setting the various low concentration soil incorporation studies (Sanborn et al., 1977) to one side because they have little bearing here, only the specific phosphorus- and halogen-containing pesticides indicated in Section 5, Biological Methods, have been examined in terms of their potential for large-scale bioconversion to nontoxic compounds. Much additional work is needed to determine the feasibility of biological disposal for the many untested pesticides.

REFERENCES

Adams, V. D. Utah Water Research Laboratory, Utah State University. Personal communication to F. Hopkins, Oct. 26, 1977.

Antonie, R. Autotrol Corporation - Bio-Systems Division. Personal communication to F. Hopkins, Oct. 14, 1977.

Atkins, P. R. The Pesticide Manufacturing Industry - Current Waste Treatment and Disposal Practices. Environmental Protection Agency, Project No. 12020-FYE. NTIS Catalogue No. PB-211129. Jan. 1972.

Autotrol Corporation, Bio-Systems Division, Milwaukee, Wisconsin. Application of Rotating Disc Process to Municipal Wastewater Treatment. Project No. 17050 DAM, Contract No. 14-12-810, Office of Research and Monitoring, Environmental Protection Agency. Nov. 1971.

Autotrol Corporation, Bio-Systems Division, Milwaukee, Wisconsin, Biosurf™ Process Information Bulletin, Biosurf™ Pilot Plant Program. 1974.

Autotrol Corporation, Bio-Systems Division, Milwaukee, Wisconsin. The Biosurf™ Process. 1976.

Baker, J. L. Annual Report. October 1976 - October 1977. EPA Grant R804533010. Department of Agricultural Engineering. Iowa State University, Ames, Iowa. Oct. 19, 1977.

Chu, J. P., and E. J. Kirsch. Metabolism of Pentachlorophenol by an Axenic Bacterial Culture. Applied Microbiology, 1033-1035, 1972.

Cserjesi, A. J. The Adaptation of Fungi to Pentachlorophenol and its Biodegradation, Canadian Journal of Microbiology, 13:1243-1249, 1967.

Freiburger, L. Predoctoral Research Associate at the Iowa State University Horticulture Station. Personal communication with F. Hopkins of MRI on July 5, 1977.

Gurnham, F. C. Editor. Industrial Wastewater Control, Academic Press, New York and London, 1965.

Gruber, G. I. Assessment of Industrial Hazardous Waste Practices, Organic Chemicals, Pesticides, and Explosives Industries. Compiled by TRW Systems Group under Contract/Grant No. EPA-68-01-2919 for the Office of Solid Waste Management Programs. Apr. 1975.

Hall, C. Head of the Department of Horticulture, Iowa State University. Personal communication to F. Hopkins. June 9, 1977.

Hancher, C. W. Oak Ridge National Laboratory. Personal communication to R. Wilkinson. Oct. 11, 1977.

Hsieh, D. P. H., T. E. Archer, D. M. Münnecke, and F. E. McGowan. Decontamination of Noncombustible Agricultural Pesticide Containers by Removal of Emulsifiable Parathion. Env. Sci. Tech., 6(9):826-829, 1972.

Ide, A., Y. Niki, F. Sakamota, I. Watanabe, and H. Watanage. Decomposition of Pentachloraphenol in Paddy Soil. Agricultural and Biological Chemistry, 36: 1934-1944, 1972.

Iowa State University, Second Quarterly Report on Micropit Pesticide Disposal (unpublished), Horticulture Department, Jan. 31, 1977 - Apr. 11, 1977.

Jeris, J. S., R. W. Owens, and R. Hickey. Biological Fluidized-Bed Treatment for BOD and Nitrogen Removal. J. Water Pol. Cont. Feder., 816-831, May 1977.

Lee, D. D., and C. D. Scott. A Tapered Fluidized-Bed Bioreactor for Treatment of Aqueous Effluents from Coal Conversion Processes. Presented at the 70th Annual Meeting of the American Institute of Chemical Egnineers, New York, Nov. 13-17, 1977.

Mason, R. D., and H. H. Weetall. Invertase Covalently Coupled to Porous Glass. Preparation and Characterization. Biotechnology and Bioengineering, 14:637-645, 1972.

Münnecke, D. M., and D. P. H. Hsieh. Development of Microbial Systems for the Disposal of Concentrated Pesticide Suspensions. Meded. Fac. Landbouwwet. Rijksnniv. Grant 40 (2, Pt. 2), 1237-1247 (1975); Chem. Abs., 84, 131127d, 1976.

Münnecke, D. M. Properties of an Immobilized Pesticide - Hydrolyzing Enzyme. Applied Environmental and Microbiology, 33(3):503-507, 1977.

Owens, R. W. Ecolotrol, Inc. Personal communication to F. Hopkins. Oct. 18, 1977.

Phenobac™. Technical Data Sheet 1377A. Published by Polybac Corporation, New York, New York, 1977.

Polybac Corporation, New York. Mutant Bacteria Add Shock Load Tolerance at Mobay Chemical Waste Treatment Plant. Sales Promotion Literature. 1977.

Sanborn, J. R., B. M. Francis, and R. L. Metcalf. The Degradation of Selected Pesticides in Soil: A Review of the Published Literature. EPA-600/9-77-022, Aug. 1977.

Scott, C. D. and C. W. Hancher. Use of a Tapered Fluidized-Bed as a Continuous Bioreactor. Biotechnology and Bioengineering, 18:1393-1403, 1976.

Stanford Research Institute. Directory of Chemical Producers. Menlo Park, California, 1977.

Todd, K. D., Editor. The Water Encyclopedia. Water Information Center. Port Washington, New York. 1970.

von Rümker, R., E. W. Lawless, and A. F. Meiners. Production, Distribution, Use and Environmental Impact Potential of Selected Pesticides. Final Report by MRI and RvR Consultants under Contract No. EQC-311 for the Council on Environmental Quality. EPA-540/1-74-901, 1974.

Wachinski, A. M., V. D. Adams, and J. H. Reynolds. Biological Treatment of the Phenoxy Herbicides 2,4-D and 2,4,5-T in a Closed System, Research Report to the U.S. Air Force Submitted by the Utah Water Research Laboratory, Utah State University, Mar. 1974.

Zitrides, T. G. Polybac Corporation. Personal communication to F. Hopkins, Oct. 25, 1977.

SECTION 6

PHYSICAL AND CHEMICAL DISPOSAL METHODS

INTRODUCTION

This section of the report describes and discusses current research and development on physical and chemical disposal methods for pesticides and related hazardous materials. The specific methods discussed apply to dilute solutions of pesticides in process wastewaters, to concentrated pesticide AI, and to finished pesticide formulations. (The last category is particularly applicable to field disposal problems.)

The existing data base is the focus of the review, but environmental and economic cost impacts of alternative methods are also assessed. The section closes with an overview of each disposal method and an outline of future research needs. References are given at the end of the section.

Each disposal method is categorized by the phase or phases in which detoxification or destruction takes place: gas, liquid, liquid-solid, and catalytic liquid phases. Within each category, individual disposal methods are discussed in alphabetical order in an attempt to minimize bias. Other organizational arrangements are possible, e.g., quality and quantity of fundamental data, level of method complexity and associated apparatus, estimated practicality for field disposal, etc. But none of these alternative arrangements offer distinct advantages over alphabetization.

RESEARCH AND DEVELOPMENT

The disposal methods examined include:

* Gas phase methods
    - Microwave plasma destruction
    - Photolysis
* Liquid phase methods
    - Activated carbon and resin adsorption
    - Molten salt baths
    - Ozonation techniques
    - Wet air oxidation

* Liquid-solid phase method

    - Chemical fixation

* Catalytic liquid phase methods

    - Catalytic dechlorination
    - Reductive degradation

GAS PHASE DISPOSAL METHODS

Two gas phase methods for the detoxification of pesticides are microwave plasma destruction and photolysis. Each is discussed below.

Microwave Plasma Destruction

Lockheed Missiles and Space Company, Palo Alto Research Laboratory (LPARL), is currently developing a detoxification method for hazardous materials, including pesticides, based on microwave plasma destruction of organic materials (Oberacker and Lees, 1977). The research efforts have been expanded from the bench-scale level through a demonstration unit which can successfully detoxify hazardous organic compounds at the rate of 0.45 to 3.2 kg/hr (1 to 7 lb/hr). The EPA has now provided additional support of this work to include fabrication and demonstration of a 4.5 to 13.5 kg/hr (10 to 30 lb/hr) apparatus with the long-range goal of developing a 40 to 50 kg/hr (~ 100 lb/hr) version which would then have wide-ranging applications and allow continuous operation by virtue of an improved pumping system.

Figures 17 and 18 present schematic diagrams of the microwave plasma unit and related components. Commercially available, standard glass apparatus and electronic hardware and accessories were used to construct the demonstration microwave reactor. The microwave power sources are two 2.5-kw power supplies which supply energy at 2,450 MHZ. The energy is fed through rectangular trough wave-guides and "tuned" or "focused" prior to entering the applicator assembly which surrounds the quartz reaction tube.

Analytical instrumentation to monitor the detoxification process includes a continuous sampling residual gas analyzer (a low resolution mass spectrometer) placed in line between the reactor tube outlet and the ice water cold trap, and auxiliary instrumentation, an infrared spectrophotometer and a gas chromatograph. Other analytical and mass balance data were obtained by standard quantitative analytical techniques.

The unit operates as follows: The organic hazardous waste material is added to the apparatus as a pure liquid, as a slurry or solution in water or methanol, or as a compressed cake or pellet. The apparatus operates at a reduced pressure (10 to 100 torr pressure) with a carrier gas and rather simple

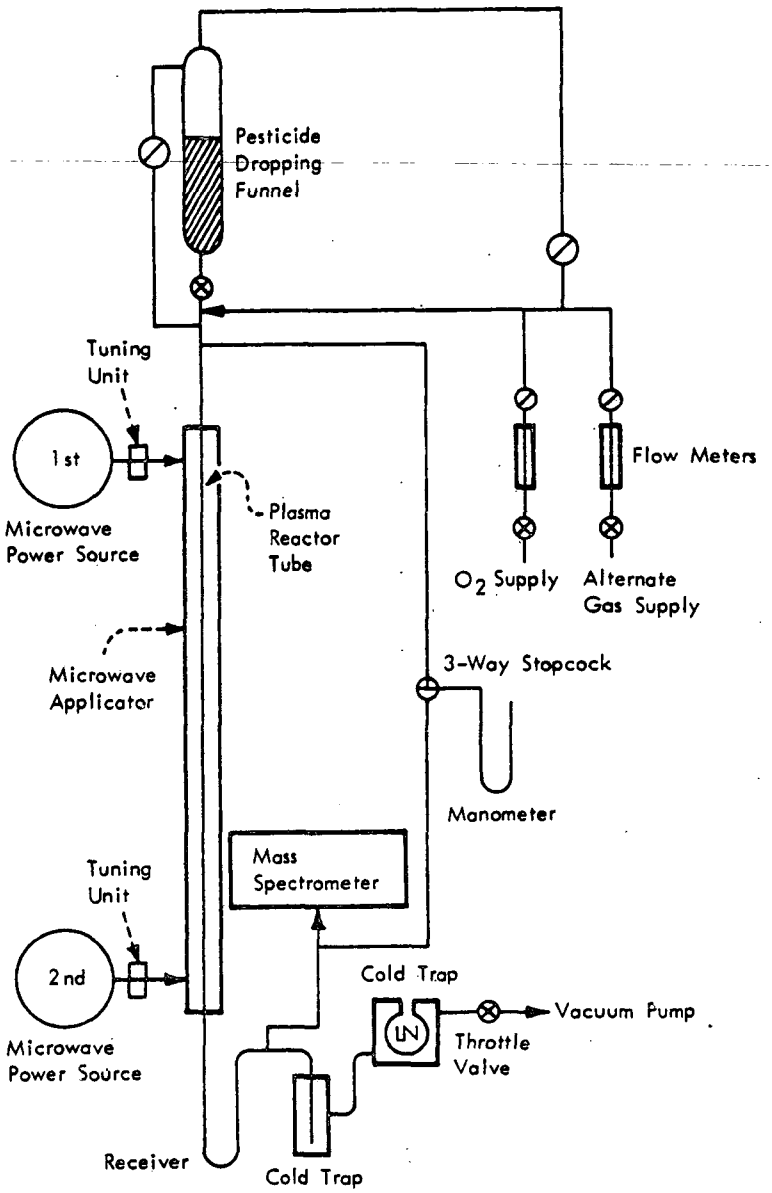

Source: Adapted from Bailin and Hertzler (1976).

Figure 17. Schematic of microwave plasma system.

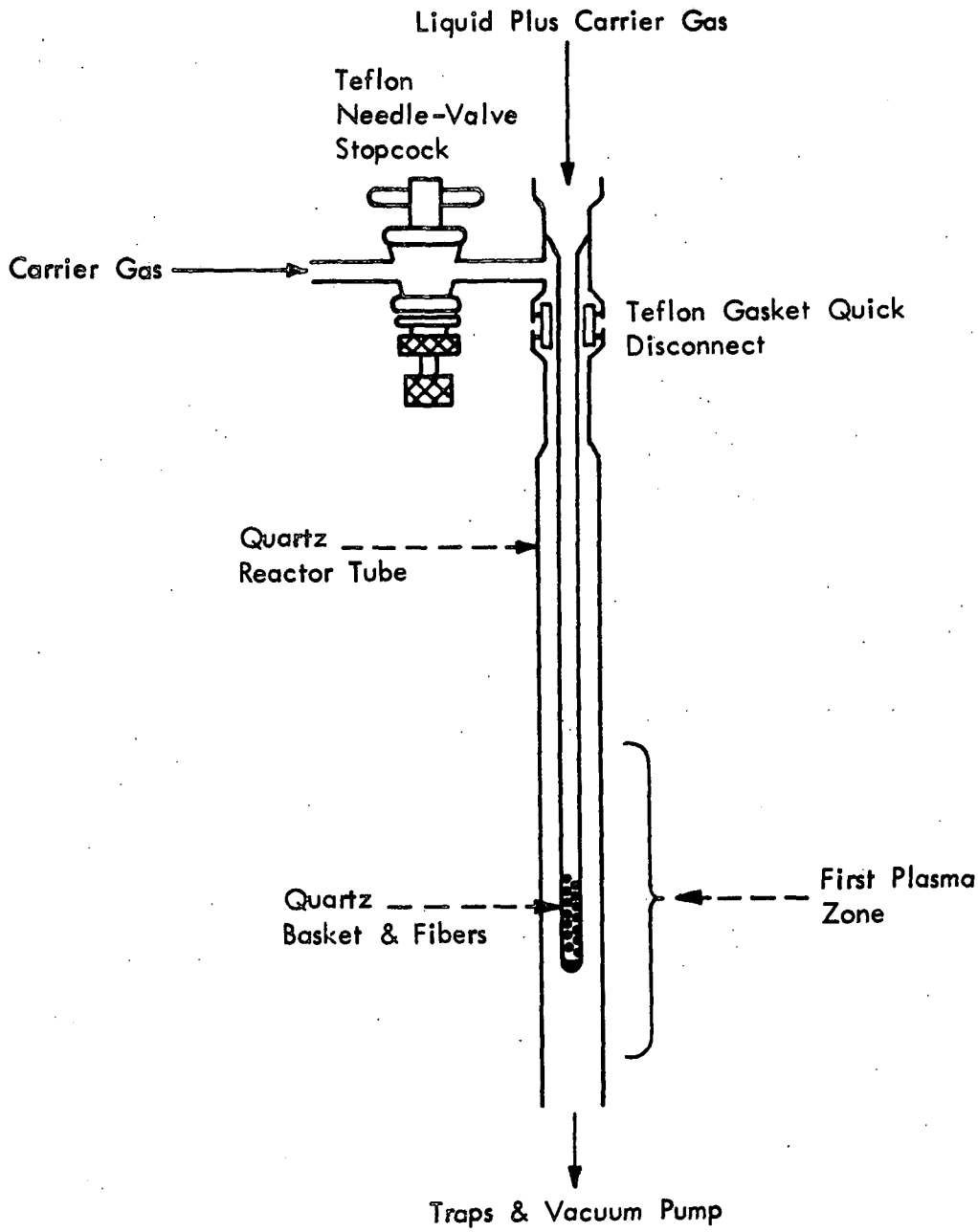

Source: Adapted from Bailin and Hertzler (1976).

Figure 18. Quartz mesh basket within microwave plasma reactor.

devices to admit and control the addition rate of the sample to the plasma reactor section.

Samples of hazardous material to be detoxified are introduced into a dropping funnel, i.e., a volumetric flask and stopcock assembly held above the reactor tube. Carrier gas may be introduced above the hazardous material dropping funnel.

The hazardous material moves under the combined forces of gravity and a carrier gas (oxygen, oxygen-argon, or steam) through a quartz reaction tube filled with quartz Raschig rings (or alternately, the reaction tube contains a quartz basket filled with quartz fibers). The purpose of the rings or fibers is to increase the residence time of the hazardous material in the reaction tube. Reaction products may be contained in traps cooled with ice water or liquid nitrogen which is placed between the reaction tube and the vacuum pump.

Destruction of the hazardous material takes place in the reaction tube by application of microwave radiation, which generates an ionized carrier gas. The microwave-induced electrons then react with neutral organic molecules to form free radicals which ultimately dissociate and/or react with oxygen to form simple reaction products, e.g., SO_2, CO_2, CO, H_2O, HPO_3, $COCl_2$, Cl_2O, Br_2, BrO_2, or in case of phenylmercuric acetate, free mercury metal. A Tesla coil is generally used to ignite the discharge.

After destruction of the hazardous material, the reaction products as gases, vapors, and readily condensable material pass into an ice water bath and then to a liquid nitrogen cold trap before the carrier gas enters the vacuum pump.

The net overall reactions for destruction of malathion and Kepone® are as follows:

$$\text{Energy (100 to 10,000 MHZ)} \xrightarrow[\text{(Carrier gas mixture)}]{O_2 - Ar} \underset{\text{(plasma or ionized gas)}}{O_2^+ + Ar^+ + 2e^-}$$

$$\text{Plasma} + \underset{\text{(malathion)}}{C_{10}H_{19}O_6PS_2} + 15O_2 \rightarrow 2SO_2 + 10CO_2 + 9H_2O + HPO_3$$

$$\text{Plasma} + \underset{\text{(Kepone®)}}{C_{10}Cl_{10}O} + 7O_2 \rightarrow 5CO_2 + 5CO + 5Cl_2$$

Production of intermediate free radicals from the organic molecules is essential in these reactions but is not shown in the net overall chemical reaction.

Table 7 presents a summary of oxygen-plasma reaction results for three classes of pesticides, PCB's, and U.S. Navy Red Dye, a pyrotechnic smoke mixture.

TABLE 7. SUMMARY OF MICROWAVE OXYGEN-PLASMA REACTIONS

Hazardous materials	Microwave power, kw	Feed rate, kg/hr	Pressure Pa (torr)	Oxygen gas flow, ℓ/hr	Reactor packing	Conversion (%)
Malathion Cythion® ULV	3.7	0.5	3,700-6,100 (28-46)	361	Wool plug[a]	99.998
Malathion Cythion® ULV	4.7	0.5	3,700-4,000 (28-30)	480	Wool plug	99.999
PCB Aroclor® 1242	4.6	0.27	2,300-4,700 (17-35)	323	Wool plug	99
PCB Aroclor® 1242	4.2	0.5	2,500-4,800 (19-36)	395	Wool plug	99
PCB Aroclor® 1254	4.5	0.18	1,700-3,300 (13-25)	360	Solid rings[a]	99
PMA Troysan® PMA-30	4.6	1.0	16,000-18,700 (120-140)	960	Raschig rings[a]	Est. 99.99
PMA Troysan® PMA-30	4.0	2.4	13,300-16,000 (100-120)	792	Raschig rings	Est. 99.99
PMA Troysan® PMA-30	4.3	3.0	13,300-16,000 (100-120)	792	Raschig rings	Est. 99.99
Kepone® 80/20 20% methanol solution	4.6	0.73	7,200 (54)	720	Raschig rings	99
Kepone® 80/20 10% solids aqueous slurry	4.6	-	5,300 (40)	None	Raschig rings	99
Kepone® 2 to 3 g solid discs	4.6	-	930 (7)	90	Raschig rings	99
U.S. Navy Red Dye	4.6	0.5 slurry; 0.09 equivalent solids (not optimized)	4,600-7,900 (35-60)	300	Raschig rings	99.99

Sources: Bailin and Hertzler (1976) and Bailin (1977).

a/ Quartz.

This constitutes the summary of work performed at LPARL on the largest operating microwave plasma apparatus as of August 1977. (Current work involves construction of a 4.5 to 13.5 kg/hr unit.)

The table indicates a high order of detoxification for malathion, PCB's, Kepone®, phenylmercuric acetate, and Navy Red Dye of at least 99+%. Feed rates are from 0.18 to 3.0 kg/hr. Pesticides and other hazardous material includes: malathion as an ULV liquid formulation using the quartz basket technique with a quartz wool bundle; PCB's as liquids (Aroclor®1242); phenylmercuric acetate (PMA-30) as a 30% w/v solution in methanol; and Kepone® (80% as a clay supported mixture) as solid press cakes of 2 to 3 g. Residence time in the reactor tube varies from 0.5 to 1 sec for liquid solutions and 10 to 30 sec for solid press cakes of Kepone® (Bailin and Hertzler, 1976).

The most recent microwave plasma detoxification studies by LPARL have been concerned with the decomposition of a U.S. Navy Red Dye (Bailin, 1977a). This material, a marine smoke and illumination signal, consisted of a mixture of xylene-azo-β-naphthol (45% by weight), 1-methylaminoanthraquinone (15%), and other components: sucrose, graphite, potassium chlorate, and a silica binder. Of these chemicals, the first is a known carcinogen, and the second is suspect.

The mixture was subjected to the microwave detoxification process with oxygen as the reactant gas. Based on the quantity of starting material, gases analyzed, and a solid residue obtained, a 99.99+% conversion to gaseous products was accomplished. Final products included polyaromatic hydrocarbons (< 2 ppm), with essentially no dye starting materials remaining (< 5 ppm) as shown by various analytical techniques, including visible/UV spectrophotometry, ultraviolet fluorescence, and combined GC/MS. Other details may be found by consulting Table 7.

Several vacuum feed techniques were evaluated for the dye, which included different physical forms, as a powder, a solution, and a water slurry. None of these techniques were satisfactory for high throughput processing, i.e., multiple kilograms per hour. It is recognized that other positive displacement methods to obtain high, continuous, and reproducible flow rates will be required for materials exhibiting non-Newtonian flow.

Finally, as part of the entire program, a survey of highly toxic materials which are stored within the continental United States has been performed (Bailin, 1977b). On the basis of information from 6 of the 10 EPA Regional Offices and other sources, a catalog of carcinogens, nerve poisons, and acutely toxic organometallic compounds and heavy metal complexes was compiled. Much of this material is present in "low poundage" quantities, ~50 kg (100 lb) and thus is amenable to the unit currently under test which may process 5 to 15 kg/hr (10 to 30 lb/hr).

Photolysis

For convenience, we have chosen to categorize photolysis as a gas phase process potentially occurring totally in the atmosphere or at any atmospheric/surface interface, e.g., air/soil, air/water, etc. A vast amount of literature describing photolytic degradation studies of pesticidal chemicals is available. Early investigators studied the photodecomposition of pesticides on soils, crops, glass plates, and filter paper. Perhaps the earliest author to compile a catalog of the effects of UV light, Mitchell reported on 141 pesticidal chemicals (Mitchell, 1961). Other excellent reviews of this field are by Crosby and Li (1969), Plimmer (1970, 1972, 1977), Rosen (1971), Watkins (1974), and Crosby (1977).

The laboratory apparatus required to study photodecomposition of pesticides is relatively simple and readily available. Both low and medium pressure mercury vapor arc lamps are commonly used. Low pressure lamps radiate about 90% of their energy in a band near 254 nm, and medium pressure lamps emit strong bands at 366 nm (16%) and at 313 nm (9%). Various light sources and associated apparatus have been discussed by Calvert and Pitts (1969), Crosby and Li (1969), Crosby (1969), and Watkins (1974).

The MRI project team has utilized these sources of literature and, in addition, has been in touch with Crosby and Plimmer to receive reports and to discuss the latest experimental work and applications of photolysis to the destruction or detoxification of pesticides and other hazardous waste materials.

If photolysis is to occur, the pesticide molecule must first absorb light energy above 290 nm or receive energy from another molecule through an energy transfer process (photosensitization). In addition, the environment surrounding this pesticide molecule plays an important role in photochemical behavior.

If photolysis does occur, the resulting products may be more or less toxic than the original product; examples for each possibility are known. For example, photodieldrin is more toxic toward flies than is dieldrin (Henderson and Crosby, 1967). Further, photolysis occurs in competition with other physical, chemical, and biochemical processes.

The initial step of the photolytic reaction usually involves homolytic fission of the parent molecule to form free radicals. These unstable intermediates react further with the solvent, other organic molecules, inorganic species, radicals, etc. The product may be a complex mixture in which isomerization, substitution, oxidation, or reduction processes have occurred.

Of particular importance is photosensitization by which certain molecules absorb light energy and transfer it to the parent pesticide molecule which would not otherwise absorb light at that wavelength. An important example of photosensitization is the photolysis of chlorodioxins by interaction with a hydrogen donor solvent molecule (Crosby, 1977; Homberger et al., 1976).

A second example of photosensitization of pesticide molecules is that of the photolysis of 3,4-dichloroaniline, which occurs as a soil metabolite of the herbicide propanil (1,1-dichlorophenylpropionanilide). In benzene solution the dichloroaniline molecule is not photochemically active under irradiation at 260 nm. However, irradiation of dichloroaniline at the same wavelength in the presence of benzophenone produces several chlorinated azobenzene species (Plimmer and Kearney, 1969). Similar azobenzene derivatives were obtained from 3,4-dichloroaniline by irradiation in water in the presence of flavin mononucleotide (Rosen et al., 1970).

Pesticides undergo several different types of photolytic reactions including: ring fission (Plimmer et al., 1967); condensation (Rosen et al., 1970; Plimmer and Kearney, 1969); bond rearrangement (Benson, 1971); reductive loss of chlorine (Plimmer and Hummer, 1969); replacement of chlorine by hydroxyl group (Crosby and Tutass, 1966); and replacement of halogen by phenyl group (Ugochukwu and Wain, 1965). Figure 19 taken from Plimmer (1972) presents examples of these reaction types for various pesticides.

Photolysis of chlorinated hydrocarbon pesticides has been previously mentioned in this subsection. Reactions in the presence of UV light for chlorinated hydrocarbons include dieldrin to form photodieldrin, which is a bridged isomer of the parent compound and contains the same number of chlorine atoms. Other products include a chlorohydrin and various partially dechlorinated species and bridged isomers. Heptachlor similarly forms a cage molecule while DDT (dichlorodiphenyltrichloroethane) yields the more volatile DDE (dichlorodiphenyldichloroethylene) and other products.

In the general class of N-methylcarbamates, e.g., carbaryl, the ester linkage is broken, yielding 1-naphthol and toxic methyl isocyanate. Photolysis of propham (isopropyl N-phenylcarbamate) forms a number of products, including phenyl thiocyanate, aniline, 2-propanol, propylene, and carbon dioxide.

Halogenated acids and phenols when subjected to photolysis can yield a series of hydrogenated or hydroxyl substituted products, some of which may be more volatile than the parent molecule. For example, 4-chlorophenoxy acetic acid photolyzes to produce benzaldehyde, benzyl alcohol, phenylacetic acid, and 4-hydroxyphenylacetic acid.

Turning to practical applications of pesticide photolysis, the most important recent example, and perhaps the only one, is the environmental degradation of 2,3,7,8-tetrachlorodibenzo-p-dioxin (TCDD) as reported by Crosby and Wong (1977) and Crosby (1977). These papers incorporate and build upon the previous work of other researchers. It is known that thin films of pure TCDD on glass substrates are stable to sunlight for at least 14 days. However, the same material dissolved in organic solvents (or 15 ppm TCDD in Herbicide Orange) rapidly decomposed with a half-life of approximately 6 hr when exposed to sunlight. Further work established that the loss of TCDD was caused by photolysis, not volatilization, absorption, or mechanical loss.

Amitrole [3-amino-s-triazole]
Ring fission (Plimmer *et al.*, 1967)

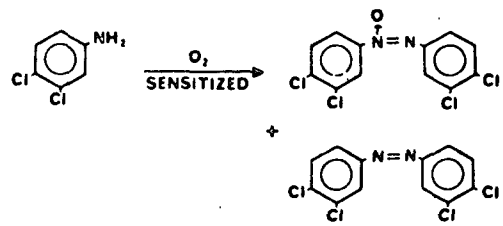

3,4-Dichloroaniline
Condensation (Rosen *et al.*, 1970; Plimmer and Kearney, 1969)

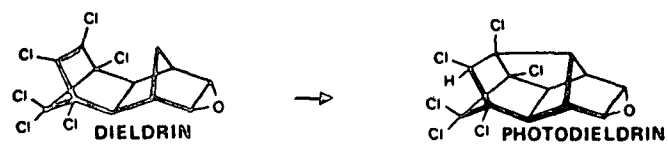

[1,2,3,4,10,10-hexachloro-6,7-epoxy-1,4,4a,5,6,7,8,8a-octahydro-1,4-*endo*, *exo*-5,8-dimethanonaphthalene]
Bond rearrangement (Benson, 1971)

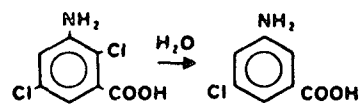

Amiben [3-amino-2,5-dichlorobenzoic acid]
Reductive loss of chlorine (Plimmer and Hummel, 1969)

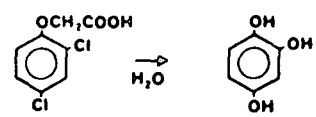

2,4-D
Replacement of chlorine by hydroxyl (Crosby and Tutass, 1966)

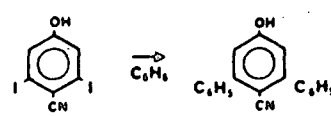

Ioxynil [4-hydroxy-3,5-diiodobenzonitrile]
Replacement of halogen by phenyl (Ulgochukwu and Wain, 1965)

Source: Plimmer (1972).

Figure 19. Examples of pesticide photolytic reactions.

The mechanism for photolysis of TCDD is currently believed to take place as follows:

* Absorption of UV light

* Photosensitization of the TCDD by a hydrogen-donor solvent

* Homolytic cleavage of a C-Cl bond

* Formation of a C-H bond in which hydrogen abstraction from the donor solvent occurs

Intermediate photolytic products include tri-, di-, and monochlorinated species. The final product of TCCD photolysis is dibenzo-p-dioxin, which is capable of being further decomposed.

LIQUID PHASE DISPOSAL METHODS

Several detoxification methods carried out in the liquid phase are discussed in this subsection, in the following order:

* Activated carbon and resin adsorption

* Hydrolysis and simple chemical treatment

* Molten salt bath procedures

* Ozonation procedures

* Wet air oxidation

Molten salt bath procedures are included in the discussion of liquid phase detoxification methods rather than in Section 4, Incineration Methods, because all or part of the degradation process takes place in a molten phase rather than in a gas phase as with the more traditional combustion units. Further, the usual combustion operating parameters for incinerators, e.g., dwell (residence) time, excess oxygen, fuel feed rate, degree of turbulence, etc., are either not meaningful or are unimportant characteristics of molten salt baths.

Activated Carbon and Resin Adsorption Processes

In general, adsorption processes have been utilized for removal of organic and inorganic materials from dilute wastewater, i.e., solutions in which the concentrations of the constituents to be removed are $< 0.1\%$ by weight. For example, a manufacturer of 2,4-D, MCPA, and 2,4-DB used activated carbon to treat a 600,000 liter/day (150,000-gal/day) waste stream that contained 10 ppm phenol

and cresol and 100 ppm chlorophenols and chlorocresols. After treatment, the combined phenolics remaining in the wastewater were < 1 ppm (Rizzo, 1972).

The EPA Demonstration Project at Velsicol Chemical Corporation, Memphis, Tennessee, may be cited as an example of resin adsorption of pesticides. Wastewaters with endrin, heptachlor, and related compounds present at ≤ 1 ppm are being treated to reduce the concentration to ≤ 1 ppb in the effluent stream. Isopropanol is used to regenerate the resin (Rohm and Haas Company, Amberlite XAD-4) and is recovered by distillation. Endrin and related chemicals are concentrated as still bottom materials which are ultimately incinerated. Reports on progress of this project are available from EPA-Industrial Environmental Research Laboratory, Research Triangle Park, North Carolina (Marx, 1977).

Activated carbon or resin adsorption has not been applied to concentrated waste streams or used to recover the AI from a typical (1 lb/gal) emulsifiable concentrate of herbicide. In this case, not only would the AI be adsorbed by the carbon bed or column, but other ingredients, including emulsifiers, diluents, synergists, and inorganics, would be adsorbed as well. The adsorption powers of the activated carbon would be rapidly depleted, thus requiring regeneration. Attempts to reclaim the AI during regeneration of the carbon by solvent extraction or by treatment with acid or alkali are hindered by the tendency for all the adsorbed species to be released from the carbon. In using adsorbent resins to reclaim pesticide AI from formulations, similar problems are encountered. Thus, recovery of the pure AI is generally not practical for formulation. Activated carbon or resin adsorption is more useful to concentrate, isolate, or control organic materials at the point of discharge from a reactor or processing unit at the manufacturing facility than for solving field disposal problems (Rizzo, 1977).

Hydrolysis and Other Simple Chemical Treatment Processes

Many chemical approaches have been taken to detoxify or destroy hazardous materials, including pesticides. These approaches generally involve rather simple treatments in solution, e.g., application of heat, pressure, alkali, chlorine, hypochlorite, etc. Some of these methods are capable of completely destroying specific pesticides, e.g., alkaline hydrolysis of organophosphorus compounds. Others only partially detoxify the AI or can yield products which are just as toxic as or even more toxic than the original pesticide. We shall examine key examples of these processes and indicate their general usefulness, inherent shortcomings, and current status. The order of discussion of various pesticide disposal research by chemical treatment is chronological.

Chemical treatment of pesticides has been investigated at the Mississippi Agricultural Experiment Station, Mississippi State University (Kennedy et al., 1969). The pesticides selected for study, listed in Table 8, were 12 readily available commercial formulations.

TABLE 8. CHEMICAL DEGRADATION RESULTS FOR SELECTED PESTICIDES

Reagents	Concentrations employed	Listing of all pesticides tested	Results	
			Pesticide, reagent	Chemical change
H_2O_2	5%, 15%, 30%	Atrazine	All pesticides, H_2O_2	No significant effects on all pesticides tested
HNO_3	4N, 8N, 16N	Bromacil	Carbaryl, HNO_3	Nitrobenzene formed
H_2SO_4	9N, 18N, 36N	Carbaryl	Atrazine, HNO_3	2-Hydroxy-s-triazine formed
NaOH	2N, 4N, 8N	2,4-D	Bromacil, H_2SO_4	Unspecified structural change
NH_4OH	5N, 7.5N, 15N	Dicamba	Dieldrin, NaOH	Unspecified structural change
		Dieldrin	Malathion, NaOH	Inorganic phosphate formed
		Diuron	Dicamba, NaOH	No significant effects
		DNBP	2,4-D, NaOH	Sodium salt of 2,4-D formed
		Malathion	DNBP, NaOH	Unspecified structural change
		Nemagon® (DBCP)	Picloram, NaOH	Decarboxylated and chlorine group replaced by hydroxyl group
		Picloram	Bromacil, NaOH	Unspecified structural change
		Trifluralin	Carbaryl, NH_4OH	1-Naphthol formed
			Trifluralin, NH_4OH	Minor color change

Source: Kennedy et al. (1969).

The objective of the study was either to degrade partially or to decompose completely the AI under controlled chemical conditions. Analytical methods included thin-layer chromatography (TLC) and infrared analysis (IR).

Formulations of pesticides in benzene solution were reacted with an excess of an appropriate chemical reagent, listed in Table 8, at various concentrations in a 1:5 (v/v) ratio at room temperature for 24 to 36 hr with occasional vigorous shaking. The solvent layer was drawn off, evaporated to approximately 1.0 ml, and analyzed by TLC or IR. The aqueous layer was extracted three times with either a chloroform-benzene mixture or n-hexane, and then the hydrocarbon layer was analyzed by IR. Results of these experiments are given in Table 8.

According to Kennedy et al. (1969), eight of the pesticide compounds were partially decomposed when treated with strong acid or alkali; three pesticides appeared unaffected. In general, acid or alkaline hydrolysis under specified experimental conditions was incomplete for the pesticides chosen for study.

The probability of finding a simple, universal chemical reagent to destroy or degrade many classes of pesticides appears to be very small. Based on the evidence obtained from their chemical degradation studies and also from thermal decomposition studies which were performed at the Mississippi Agricultural Experiment Station (including differential thermal analysis, dry combustion, and ashing techniques in a muffle furnace), Kennedy et al., concluded that incineration is superior to chemical treatments as a general method for the destruction of waste pesticides (Kennedy et al., 1969).

In a related study, Kennedy and his co-workers treated four organophosphorus insecticides (DDVP, parathion, schradan, and Systox®) with approximately 100 chemical reagents (Kennedy et al., 1970). The individual reagents are not listed here, but they included organic and inorganic acids, organic and inorganic bases, amines, amides, organic peroxides, enzymes, household detergents, various bleaches, solvents, phenols, chelating agents, metallic ions, organic and inorganic salts, heterocyclic compounds, sodium and lithium-metals in liquid ammonia, amino acids, etc.

The principal results of this screening and testing program are given in Table 9, in which those combinations are listed for which degradation was at least 90% complete. Other reagents, e.g., phosphatase enzymes and enzyme active household detergents, produced only partial decomposition of parathion. Hydriodic acid produced partial decomposition of DDVP, parathion, and Systox®. Benzoyl peroxide and t-butyl peroxide destroyed approximately one-half of all four insecticides tested. p-Toluene sulfonic acid partially decomposed schradan.

TABLE 9. SUCCESSFUL CHEMICAL DEGRADATION OF FOUR ORGANOPHOSPHORUS INSECTICIDES

Insecticides	Reagent employed	Percentage decontaminated
DDVP, parathion, schradan, Systox®	Metallic sodium in liquid ammonia	100 100
DDVP, Systox®, schradan, parathion	Metallic lithium in liquid ammonia	100 97
DDVP	Triethanolamine	97
DDVP	Imidazole	92
Systox®	H_2O_2	100
Parathion	H_2O_2	93

Source: Kennedy et al. (1970).

Although the report concluded that metallic sodium in liquid ammonia is the most effective agent tested thus far for the selected organophosphorus insecticides, the human hazard, corrosive nature, and high cost of this chemical combination precludes it from serious consideration for field use.

The Dennis report (1972) presents half-life alkaline hydrolytic rate data for seven pesticides under varying experimental conditions. The pesticide classes studied included organophosphorus compounds and carbamates. Half-lives ranged from 7.5 min for methyl parathion in 1N NaOH at 15°C to 144 hr for Diazinon® at pH 10.4 at 20°C. Table 10 presents half-lives of various pesticides under alkaline conditions.

Dennis concludes that no single chemical procedure exists for degrading the entire chemical spectrum of biocides. Several approaches to chemical degradation may need to be tried before the optimum system or procedure is adopted. Dennis recommends alkaline hydrolysis for organophosphorus and carbamate compounds but concludes that other chemical techniques (e.g., oxidation, photolysis, dechlorination, etc.) require more detailed study (Dennis, 1972).

TABLE 10. HALF-LIVES OF VARIOUS PESTICIDES UNDER ALKALINE CONDITIONS

Pesticide	Experimental conditions		Half-life
	Temperature	pH	
Parathion	15°C	1 N NaOH	32 min
Methyl parathion	15°C	1 N NaOH	7.5 min
Malathion	25°C	10.03	28 min
DDVP	37.5°C	8.0	462 min
Diazinon®	20°C	10.4	144 hr
Carbaryl	Ambient	Alkaline	Rapid
Propoxur (Baygon®)	20°C	10.0	40 min

Source: Dennis (1972).

TRW Systems, Inc. (Ottinger et al., 1973), has studied methods of reduction, neutralization, recovery, or disposal of hazardous wastes, including pesticides. These authors review alternate disposal options for dilute and concentrated pesticide wastes and ultimately select and recommend optimum procedures (see Volume V of Ottinger et al.). Classes of pesticides discussed include: chlorinated hydrocarbons, organophosphorus, and diene-based compounds. Table 11 summarizes the options and final recommendations of the study, which are coded as follows:

No. 1 - Adsorption with powdered activated carbon

No. 2 - Adsorption with granular activated carbon beds

No. 3 - Coagulation and filtration

No. 4 - Acid hydrolysis

No. 5 - Alkaline hydrolysis

No. 6 - Chemical oxidation

No. 7 - Chemical reduction

No. 8 - Anaerobic degradation

TABLE 11. SUMMARY OF TRW ALTERNATE OPTIONS FOR DISPOSAL OF PESTICIDE WASTES[a]

Pesticide solution strength	Alternate disposal options (coded)	Disposal options-- in order of preference
Chlorinated hydrocarbons		
DDT, DDD, BHC		
Dilute pesticide wastes	1, 2, 3, 5, 8, 9	2-Activated carbon beds 5-Alkaline hydrolysis
Concentrated pesticide wastes	7, 11, 12, 13	13-Incineration
Organophosphorus compounds		
Methyl parathion, parathion		
Guthion®, Systox®		
Dilute pesticide wastes	1, 2, 5, 9, 10	2-Activated carbon beds 10-Activated sludge treatment 5-Alkaline hydrolysis
Concentrated pesticide wastes	5, 7, 11, 12, 13	13-Incineration
Diene-based compounds		
Chlordane, aldrin, endrin		
Heptachlor, dieldrin		
Dilute pesticide wastes	1, 2, 4, 6, 8, 9	2-Activated carbon beds
Concentrated pesticide wastes	7, 11, 12, 13	13-Incineration

Source: Ottinger et al. (1973).

a/ These methods may not be in accordance with current regulations and guidelines established under Federal Insecticide, Fungicide, and Rodenticide Act (FIFRA) and Resource Conservation and Recovery Act (RCRA).

No. 9 - Removal by surface active agents

No. 10 - Activated sludge treatment

No. 11 - Deep well injection

No. 12 - Sanitary landfill

No. 13 - Incineration

Although many alternate disposal options are potentially available and some preliminary development work has been accomplished for each technique, Ottinger and his co-workers recommend only a very limited number of options for disposal of dilute and concentrated pesticide wastes. For dilute wastes, activated carbon beds are commonly selected. This choice is based on demonstrated and well-established chemical engineering technology and dates back to at least 1955 in England (Lambden and Sharp, 1970; Sharp, 1956). Incineration is the only recommended option for concentrated pesticide wastes.

The TRW report rejects deep-well injection and sanitary landfill as not representing practical, safe, long-term disposal options (in conformity to the present position of EPA). Other options including chemical treatment were considered to be inadequate for the job or too narrow of utility to be of general application.

Another hydrolytic technique for detoxification of organophosphorus pesticides has been developed by Wolverton (1973). Specifically, the procedure involves forming a solution of monoethanolamine (MEA) in dipropyleneglycol monomethyl ether (DPGME) and applying it to an organophosphorus pesticide spill. The specific application cited in the U.S. Department of the Interior patent is for cleanup of spills associated with aircraft spraying operations. Wolverton's work was a part of the technical support required for the chemical warfare program of the Department of the Air Force in the late 1960's and early 1970's. Organophosphorus pesticides that were susceptible to detoxification included: malathion, naled, dibrom, TEPP, and DDVP. No other pesticides were mentioned in the patent.

The decontamination procedure involved treating one volume of pesticide with 10 volumes of the decontaminating mixture containing 12.5 to 25% MEA in DPGME. Reaction times varied from 30 to 100 min at ambient temperatures for a complete reaction, depending on the individual pesticide. The completeness of degradation of the AI was confirmed by thin-layer chromatography.

Based on these data, Wolverton claimed the resulting reaction mixtures were less toxic to fish than was the decontaminating solution alone. Further, "The resulting mixture of decontaminant and insecticide can be readily hosed

away with water without having the resulting runoff deleteriously affecting any nearby streams and fishlife therein" (Wolverton, 1973). The reaction mixture is noncorrosive toward the aluminum metal alloys commonly used in aircraft construction.

If these claims are valid, this procedure may offer a reasonably simple, relatively inexpensive, and environmentally sound method to clean up spills of organophosphorus pesticides resulting from aircraft spraying operations, drum or container rinsing and reclamation operations, pesticide waste disposal problems, and other accidental spills.

Wolverton was contacted at the National Space Technology Laboratory, Bay St. Louis, Mississippi, and asked to review his previous work and to assess the application of this technology (Wolverton, 1977). He orally reconfirmed his earlier findings and continues to stand behind the conclusions stated in the patent. To his knowledge, no one in the public or private sector is utilizing his findings.

An MRI report presented disposal suggestions for small quantities (< 50 lb or < 5 gal.) of unused pesticides (Lawless et al., 1975). A total of 550 chemicals that have been sold as pesticides were identified and classified into seven major categories according to structure and reactivity; and information on each was compiled from technical literature on their pesticidal uses and properties, and their detoxification and degradation chemistries. Fourteen disposal procedures were described suitable for the layperson with guidance from a responsible official. Separate procedures describe the proper disposal of containers and the cleanup and treatment of spills. Table 12 summarizes the findings.

A TRW Systems Group study produced a Handbook for Pesticide Disposal by Common Chemical Methods (Shih and Dal Porto, 1975). One objective of the project was to assess simple chemical degradation/detoxification methods for the disposal of small quantities of pesticide wastes. A second goal was to advise pesticide users of safe, reliable methods for pesticide disposal, including associated hazards of disposal of which the layperson should be aware. This study represents a literature review; field testing of the recommended chemical procedures was not performed.

A total of 20 pesticides chosen from three major categories or chemical families were investigated in terms of production volume, toxicity, soil persistence, mobility, and solubility in water. Identification of practical chemical degradation/detoxification methods for pesticide disposal was determined by literature review and contact with manufacturers.

The study concluded that treatment by alkali is an effective and environmentally sound method for the disposal of small quantities of certain pesticides, but it was emphasized that this method is by no means a universal one. This

TABLE 12. SUMMARY OF MRI DISPOSAL PROCEDURES AND ELIGIBLE PESTICIDES[a]

No.	Procedure	Eligible pesticides (%) primary recommendation	Pesticide examples
1.	Turn in to pesticide collection center		Aldicarb, mercury compounds
2.	Return to supplier	28.2	Parathion, Compound 1080
3.	Turn in to industrial waste service		Dieldrin, nicotine, TEPP, thallium sulfate
4.	Place in trash for pickup service	3.6	Butoxy polypropylene glycol, chlorinated hydrocarbons as liquids, Dyrene®, atraton, barban
5.	Incineration	29.6	DDT, 2,4,5-T and other highly chlorinated hydrocarbons
6.	Open burning	1.7	No longer recommended as a general disposal method
7.	Treatment with alkali	10.4	Acephate, Aramite®, bromophos, butonate, carbamates, BUX TEN®, captan, carbaryl
8.	Treatment with acid	2.4	Nabam, CDEC, Dithane® M-45, M-31, ferbam, maneb
9.	Treatment with oxidants	1.0	Thanite®, Folex®, calcium cyanamide, calcium cyanide
10.	Treatment with reductants	0.0	Acrolein, formaldehyde, sodium chlorate (alternate procedures)
11.	Burial in the ground	18.7	Arsenicals, organometallics (other than mercury compounds), sulfur, creosote, oils

(continued)

TABLE 12 (CONTINUED)

No.	Procedure	Eligible pesticides (%) primary recommendation	Pesticide examples
12.	Ground surface disposal	1.7	Liquid fumigants, CCl_4, di-n-butylphthalate, Tropital®
13.	Dilution	2.0	Botanicals, butoxy polypropylene glycol, n-decanol, magnesium chlorate, propionic acid
14.	Release to air	0.7	Aerosol formulations, pyrethrins, methyl bromide, ethylene, propylene oxide

Source: Lawless et al. (1975).

a/ These methods may not be in accordance with current regulations and guidelines established under Federal Insecticide, Fungicide, and Rodenticide Act (FIFRA) and Resource Conservation and Recovery Act (RCRA).

conclusion was reached after consideration of completeness of the reactions and toxicity of the final products. Table 13, taken from the TRW report, indicates those pesticides which may be safely disposed of by laypersons using simple alkaline treatment and those pesticides for which chemical treatment is inadvisable. The pesticide classification system is taken from a report by Lawless et al. (1975) and indicates the TRW report focuses on three major categories.

Table 13 indicates that certain pesticides may not be disposed safely by alkaline hydrolysis, whereas other pesticides within the same class may be so disposed. This is an important point, since disastrous results might occur if one assumed that all pesticides in a given class could be safely disposed merely because one pesticide in that class was listed as being safely detoxified by alkaline treatment.

The TRW report offers recommended procedures for the disposal of small quantities of pesticides and decontamination of pesticide containers. Details include pesticide AI, formulation, decontaminant solution, ratio of decontaminant solution to formulation, and contact time. For example, atrazine as a wettable powder (WP) may be detoxified by treatment with a 10% (w/v) solution of NaOH. The TRW report directs the layperson to treat 1 lb of atrazine WP with 1 gal. of caustic for 48 hr.

The TRW report also offers alternate disposal methods for 13 pesticides. These methods include land burial, land burial with acid treatment, and ground surface disposal. Incineration is another alternative, but the necessary equipment is not generally available to the layperson; hence, the emphasis on the three alternative methods discussed above.

The TRW report recommended the National Agricultural Chemicals Association (NACA) "triple rinse and drain" procedure for the decontamination of glass and metal pesticide containers. The rinse water from treatment of pesticides that are not decomposed by caustic must be properly disposed of by incineration, burial at an approved landfill, or burial in an isolated area where it is extremely unlikely that the pesticide will enter groundwater supplies (Class 1 site).

Combustible pesticide containers which previously did not contain toxic metals are best handled in approved incinerators. Alternately, the containers may be buried in an approved landfill. Small aerosol cans for pesticides are not to be incinerated or punctured. These are more properly disposed by municipal trash service, which is primarily directed to sanitary landfill operations. Further discussion of recommended procedures for disposal and storage of pesticides and pesticide containers is given in Appendix B.

TABLE 13. CHEMICAL METHODS FOR DISPOSAL OF SELECTED PESTICIDES

Class of pesticide	Pesticides evaluated: Recommend use of alkali	Pesticides evaluated: Recommend no chemical treatment
Inorganic and metal-organic pesticides	No examples given	No examples given
Phosphorus-containing pesticides	Diazinon® Guthion® Malathion Naled	Dursban® Methyl parathion
Nitrogen-containing pesticides	Atrazine Captan Carbaryl	Alachlor (Lasso®) Diuron Maneb Picloram Trifluralin
Halogen-containing pesticides	No examples given	Amiben® Chlordane 2,4-D Methoxychlor Pentachlorophenol Toxaphene
Sulfur-containing pesticides	No examples given	No examples given
Botanical and microbiological pesticides	No examples given	No examples given
Organic pesticides, not elsewhere classified	No examples given	No examples given

PRECAUTIONS: Use personal protection equipment. Follow disposal procedure closely. Dispose larger quantities in several smaller batches.

Source: Adapted from Shih and Dal Porto (1975).

Current projects at the U.S. Army Medical Bioengineering Research and Development Laboratory at Fort Detrick, Frederick, Maryland, include hydrolysis of Diazinon®, malathion, Dursban®, and naled. Meier et al. (1976) have published an in-depth study of the hydrochloric acid catalyzed hydrolysis of Diazinon®. The research included the pure AI and three military standard formulations, 47.5% emulsifiable concentrate, 2% dust, and a 0.5% oil solution. The detailed studies attempted to optimize the reaction conditions, to determine the rate of reaction, to identify mechanisms and products of the reaction, and to evaluate the toxicity and environmental effect of the final reaction mixture. This work constitutes one of the more complete investigations of chemical treatment of a specific pesticide since it deals with the overall field disposal problem.

Conclusions reached by the Department of the Army group were:

* Hydrolysis by HCl (1.1 N) degrades Diazinon® with a half-life of 215 min at 25°C

* Total reaction time for 99.9% decomposition at 25°C varies from 28 to 42 hr depending on the specific pesticide formulation, including the pure AI

* Neither of the principal decomposition products of the reaction was found to be toxic to aquatic species of waterflea, bluegill fish, and rainbow trout

* Additional aquatic bioassay data indicate that the final reaction mixture possesses a residual toxicity of unknown character toward aquatic species

Work is continuing on this topic to identify and eliminate the cause of the residual toxicity. At present the technology is not considered by the Department of the Army to be a safe disposal method for Diazinon®.

Molten Salt Processes

Atomics International Division of Rockwell International Corporation has spent considerable time and effort over the last 20 years to develop expertise in molten salt technology. Recently, this body of knowledge has been directed toward solid waste disposal, particularly industrial and hazardous wastes.

The molten salt bath has inherent advantages over conventional combustion techniques in that: (a) excellent thermal contact is maintained between the heat source and the carbonaceous waste material; and (b) the resulting off-gases generally do not contain acidic components (e.g., oxides of sulfur) because of the caustic salt used (e.g., usually sodium carbonate or a eutectic mixture of sodium and potassium carbonates). Further, the salt bath

is stable, nonvolatile, relatively inexpensive, nontoxic, and may be recycled for further use.

The process is applicable to a host of waste disposal problems, including:

* Pesticides and combustible pesticide containers

* Combustible industrial and consumer wastes

* Hazardous chemicals, including carcinogens

* Explosives

* X-ray film

* Hospital wastes

* Low level radioactive wastes

The principal steps of the operation are as follows.

The combustible waste material is shredded in a hammer mill and conveyed to a hopper to await entry into the bath, a large vessel, 3.1 m (10 ft) high and 0.9 m (3 ft) diameter, that contains the molten salt which is maintained between 800 to 1000°C. The waste material is blown into the reactor by an air stream which also furnishes oxygen for the combustion process. The bath is preheated on startup; once the reactor is in operation, the heat of combustion makes the process self-supporting. In the current pilot-scale model, feed rates may be varied from 23 to 91 kg/hr (50 to 200 lb/hr) depending on the application. Figure 20 indicates the general molten salt combustion process concept, and Figure 21 indicates a schematic flow diagram for a pilot plant facility.

In the reactor vessel the essential or overall chemical reaction is summarized below:

$$\text{Carbonaceous material, containing C, H, O, N, S, Cl, P, etc.} + O_2 \xrightarrow[\text{molten salt bath with iron catalyst}]{\Delta}$$

Off-gases, including CO_2, H_2O, N_2, O_2, and converted wastes as sulfates, phosphates, chlorides

Off-gases are sent through a baffle assembly to trap and remove entrained salt particles and then to a high energy venturi scrubber unit to remove any fine particulate matter before emission to the atmosphere. Acidic scrubber units are not needed since these components are absorbed by the alkaline carbonate melt.

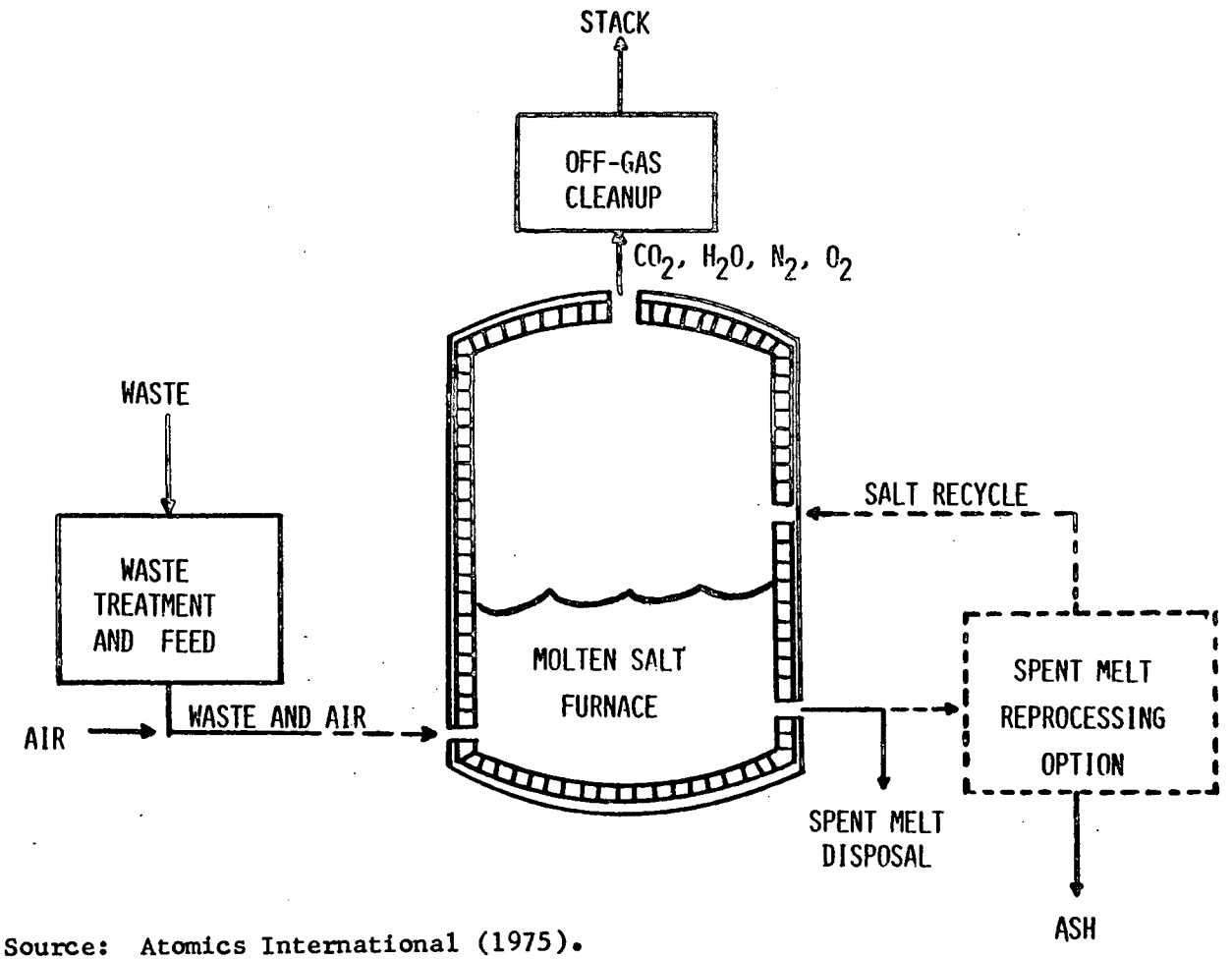

Source: Atomics International (1975).

Figure 20. Schematic of molten salt combustion process.

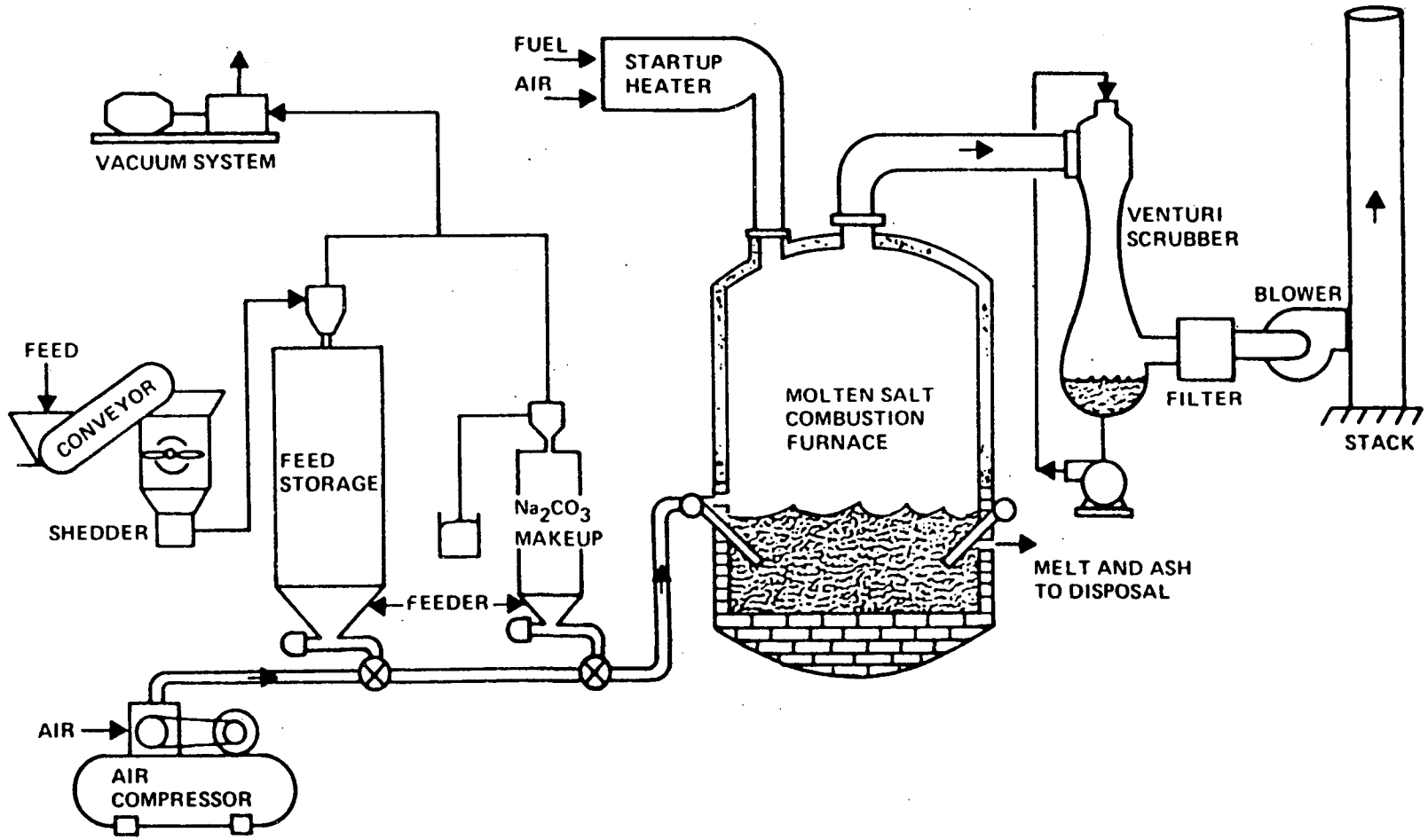

Source: Atomics International (1975).

Figure 21. Schematic of the molten salt pilot plant.

In time, the molten salt bath accumulates significant quantities of sodium chloride, phosphate, sulfate, other noncombustible material, etc., that affect the fluidity of the melt. The inorganic "ash" must be removed when the combined total of all dissolved impurities reaches 20% by weight.

The "spent" molten carbonate is recycled by transferring it to a dissolving tank where it is treated with water or aqueous sodium bicarbonate solution; the dissolved carbonate solution is filtered to remove insoluble materials and treated with carbon dioxide gas to precipitate sodium bicarbonate. The bicarbonate salt is recovered by filtration and used in the molten salt furnace where it is reconverted to carbonate. The remaining bicarbonate solution is normally recycled, but eventually it accumulates too much chloride, phosphate, and sulfate and must be discarded. Figure 22 indicates a scheme for recycling carbonate melt as described above (Birk, 1973).

Table 14 indicates four classes of hazardous chemicals and wastes tested thus far by Atomics International, i.e., pesticides, industrial chemicals, low level radioactive wastes, and explosives. Of interest to this study are the pesticides tested and the degree of decomposition achieved by molten salt bath technology. As indicated in Table 14, the pesticides tested represented several classes of chemicals: the chlorinated hydrocarbons, DDT, 2,4-D, and chlordane; the organophosphorus compound, malathion; and the carbamate, Sevin®, were tested as the pure AI contained in polyethylene bags; a malathion-DDT mixture was tested in xylene solution. These experiments were performed utilizing a bench-scale reactor at 825 to 925°C with efficiencies of the order of 99.9+%. Estimated process rates were 0.5 kg/hr (1 lb/hr) (Yosim, et al., 1974).

Gaseous emissions were monitored, and essentially only CO_2, CO, H_2O, O_2, and N_2 were found in the exhaust gas. Small amounts of nitric oxides (< 20 ppm), organic chlorine (< 0.04% of the original pesticide) and traces of hydrocarbons (< 10 ppm) were found.

Tables 15 and 16 present summaries of results for molten salt bath combustion of various pesticides and other hazardous chemicals. Temperature ranges, percentage chemical or pesticide destruction, and concentration of the material in the exhaust gas are given. It is evident that, on the bench-scale level of operation, very high combustion efficiencies can be obtained, > 99.99%. Thus, destruction of pesticides and other hazardous chemicals by molten salt bath technology has been demonstrated on the bench scale at 0.25 to 1.0 kg/hr (1/2 to 2 lb/hr) and scale-up to 450 kg/hr (1,000 lb/hr) for these materials has been suggested (Atomics International, 1975).

Atomics International has proposed a preliminary design for a large mobile molten salt disposal system, as shown in Figure 23.

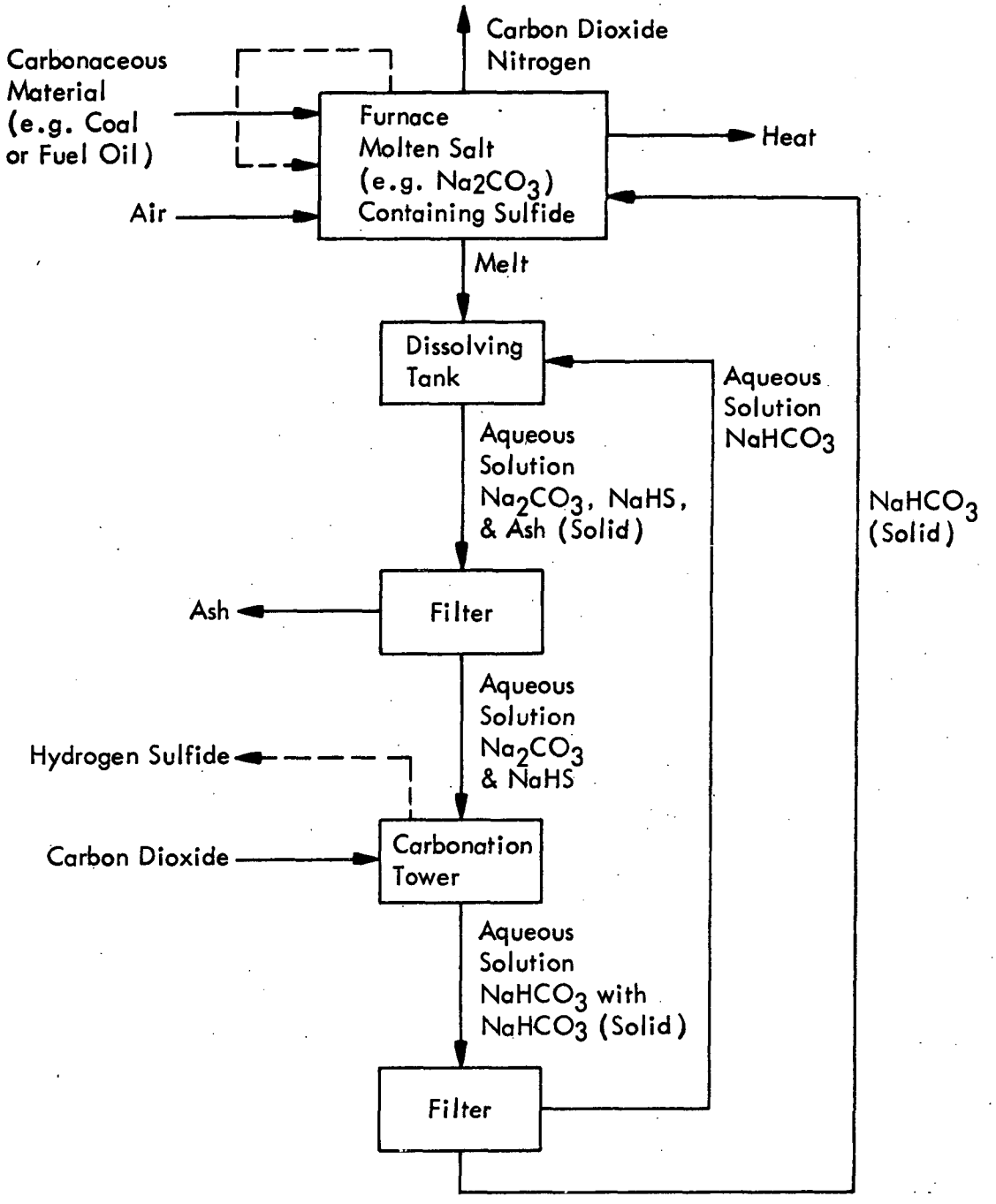

Source: Birk (1973).

Figure 22. Schematic flow diagram for recycling carbonate melt.

TABLE 14. HAZARDOUS CHEMICALS AND WASTES TREATED BY MOLTEN SALT BATH

Type of chemical or waste	Materials tested
Pesticides	DDT powder, malathion, DDT-malathion solution, chlordane, 2,4-D, and carbaryl
Industrial chemicals	Chloroform, trichloroethane, nitroethane, nitropropane, diphenylamine hydrochloride, monoethanolamine, diethanolamine, and para-arsanilic acid
Low level radioactive wastes	Polyvinylchloride, polyethylene, rubber, paper, ion exchange resins, tributyl phosphate solvent, etc., contaminated with transuranic and/or fission products
Explosives	Composition B, TNT, tetryl, HBX-3, ammonium nitrate, glyceryl nitrate, cyclonite, and TNG

Source: Yosim et al. (1974).

TABLE 15. SUMMARY OF RESULTS OF MOLTEN SALT BATH COMBUSTION TESTS ON CHEMICALS

Chemical	Average test temperature (°C)	Percent of chemical destroyed	Concentration of chemical in melt (ppm)	Quantity in gas (Mg/m^3)	TLV (Mg/m^3)[b]
Chloroform	818	> 99.999	< 0.1	< 0.5	120
Diphenylamine HCl	922	> 99.9992	< 0.1	< 0.4	10[c]
Nitroethane	892	> 99.993	< 1	< 4.4	310
Para-arsanilic acid	924	> 99.9991	< 0.1[a]	< 0.8	0.5[d]

Source: Atomics International (1975).

a/ While the concentration of p-arsanilic acid in the melt is extremely low, the concentration of inorganic arsenic compounds in the melt is, as expected, high, since the arsenic is retained in the melt as sodium arsenate.

b/ Threshold limit value. American Conference of Governmental Industrial Hygienists, Cincinnati, Ohio, 1976.

c/ As diphenylamine.

d/ As arsenic.

TABLE 16. TYPICAL RESULTS OF MOLTEN SALT BATH COMBUSTION TESTS ON PESTICIDES

Pesticide	Average test temperature (°C)	Percent pesticide destroyed	Concentration of pesticide in melt (ppm)	Concentration in exhaust gas (Mg/m^3)	TLV[a] of pesticide (Mg/m^3)
DDT powder	894	99.998	< 0.2	0.34	1
Malathion	896	99.999	< 0.005	0.42	10
DDT-malathion solution	992				
DDT		99.997	< 0.05	1.4	1
Malathion		99.996	< 0.01	1.1	10

Source: Atomics International (1975).

a/ Threshold limit value. American Conference of Governmental Industrial Hygienists, Cincinnati, Ohio, 1976.

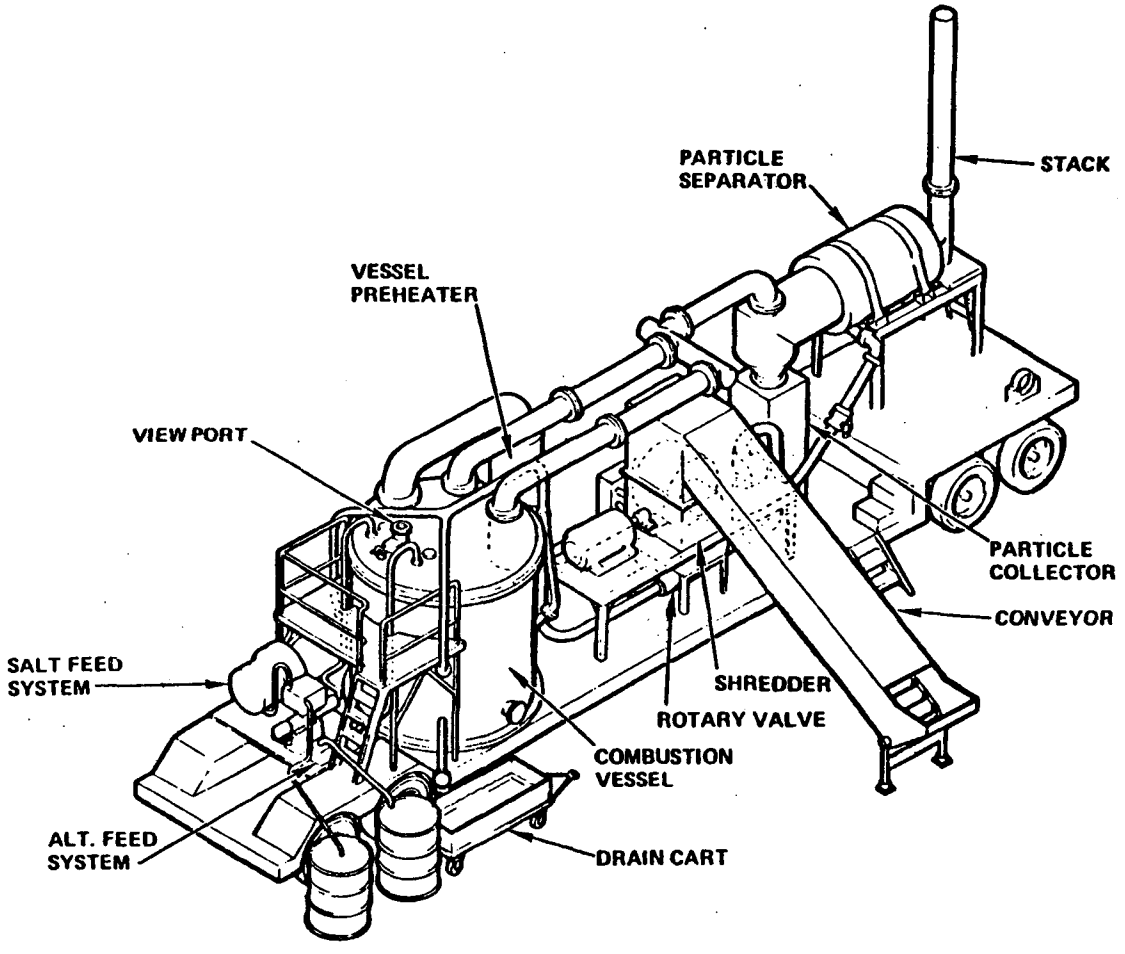

Source: Atomics International (1975).

Figure 23. Mobile molten salt waste disposal system.

The combustor and auxiliary components are mounted on a truck bed which would allow the system to be moved from site to site for destruction of large quantities of hazardous materials. This would be a definite advantage since transshipment of pesticides and other hazardous chemicals across state lines for disposal is a sensitive issue in many parts of the country. Secondly, the combustion unit could be more widely utilized because of its mobility.

The Atomics International mobile combustion unit would be capable of processing 230 kg/hr (500 lb/hr) or an estimated 2.76 MT/day (3 tons/day) based on 12 hr/day operation. The combustor would be 1.8 m (6 ft) diameter and 3.35 m (11 ft) tall. For solid pesticides a mechanical screw conveyer would automatically feed the combustor at a predetermined rate. For liquid pesticides, metering flow rate devices are available. The exhaust gas is passed through a particulate scrubber and/or separator to remove entrained salt particles and may be passed through a baghouse (not shown) before it is emitted.

Chemical monitoring of the exhaust gas to determine operating efficiency and absolute quantities of undestroyed pesticide released to the environment is recommended. Records would be kept as to type of pesticide incinerated, including AI, formulation, time of burn, length of burn, temperature, absolute quantity incinerated, exhaust gas analysis, total amount released to the environment, atmospheric conditions, etc.

Contaminated carbonate salt could be automatically reprocessed by appropriate apparatus on a second truck bed (not shown), or the spent molten salt could be released to a drain cart and buried in a Class 1 disposal site.

A second type of molten salt incineration is under development by Anti-Pollution Systems, Inc. (APS). The incinerator has been designed principally for municipal garbage and sewage, although there are many other potential applications, including chemical wastes and pesticides. A recent application was to mount the unit on a truck bed (which allowed the equipment to be transported from New Jersey to Maine, where the system incinerated tannery wastes and permitted recovery of chromium metal values) (Greenberg, 1977).

Figure 24 presents a schematic diagram of one configuration of the APS system. Solid waste is introduced through an auxiliary mechanical feed component (not shown); or, if the waste is a liquid, e.g., a pesticide formulation, it may be mixed with the fuel oil prior to incineration. The combustion unit is essentially a box within a box and in contact with a molten salt bath.

After ignition of the fuel (oil or gas), the waste material begins to combust and transfers the heat generated to the salt bed beneath the combustion chamber. The molten salt maintains the bottom portion of the combustion chamber at the melting point of the salt. If the heat of combustion is great enough and a sufficient quantity of waste is burned, it is not necessary to premelt the salt bed.

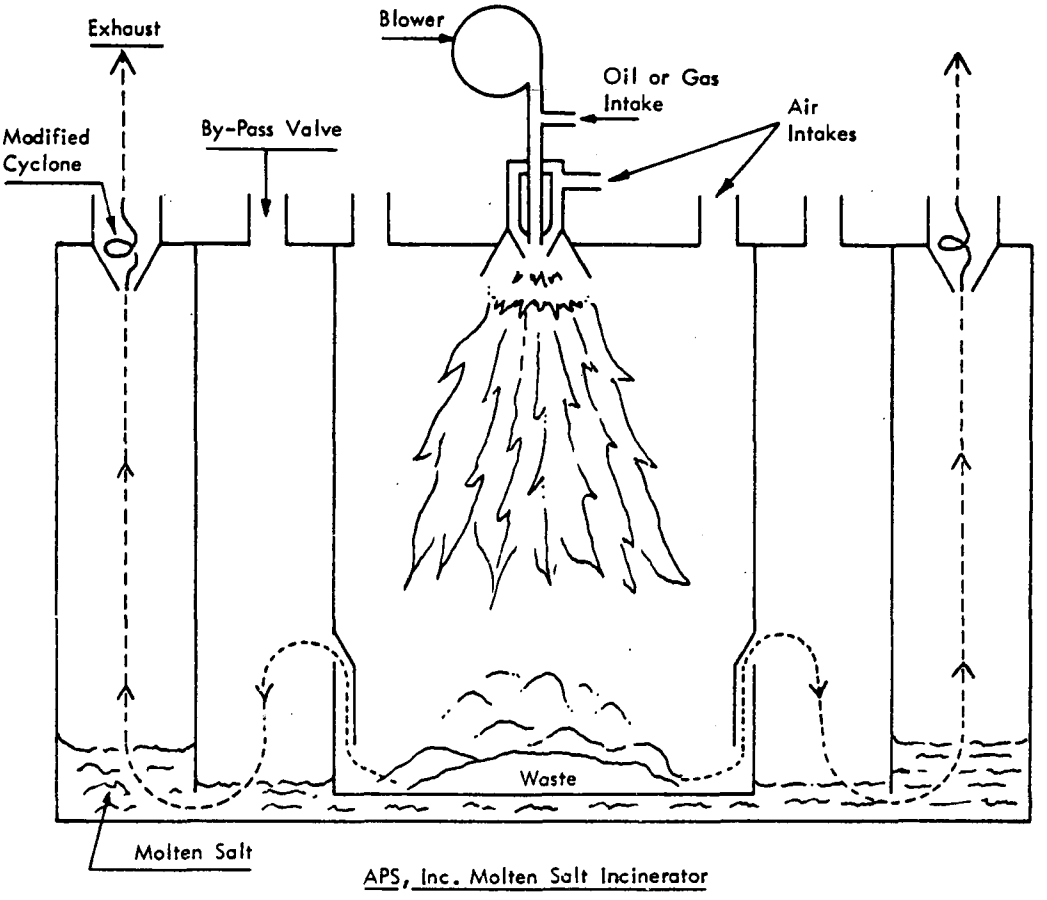

Source: Adapted from APS, Inc. (undated).

Figure 24. APS molten salt incinerator.

Once the combustion process is started, the exhaust gases which are produced enter the molten salt bath via a series of baffles. The temperature of the molten salt is approximately 560 to 600°C (1042 to 1112°F), lower than the 800 to 1000°C (1472 to 1832°F) used in the Atomics International unit. A modified dry cyclone collector prevents salt losses at air velocities above 400 ft/min. The estimated residence time for off-gases in the molten salt is ~ 0.1 sec at 560 to 600°C, which has been shown to be sufficient for odor removal and oxidation of organic vapors for sewage sludge and pathological wastes.

The molten salt bath performs three functions in treating or processing the off-gases:

1. Particulates are trapped with the salt bath.

2. The salt bath operates as an afterburner.

3. Toxic volatiles may react further with the molten salt.

Impurities trapped in the salt bath (carbon particles and inert materials) may be removed by use of a fine mesh stainless steel screen. Combustible carbon particles would eventually be oxidized to CO_2 by the use of steam.

No pesticides or pesticidal formulations have been incinerated in the APS, Inc. device at the time of writing, although chlorinated hydrocarbon wastes have been treated. No operating data, e.g., efficiency of destruction, description of the off-gases, material balance, flow rate, etc., are available, however.

Ozonation Methods

We shall describe three pesticide detoxification methods utilizing ozone gas. These are:

* Ozone/ultraviolet irradiation

* Sonocatalysis, and its simpler version

* Catalytic ozonation

Each is described below.

Ozone/Ultraviolet Irradiation--

Houston Research, Inc., has developed a method of destroying or detoxifying hazardous chemicals in solution, including heavy metal cyanides and pesticides, utilizing a combination of ozonation and UV irradiation. The technique involves rather simple apparatus: a reactor vessel, an ozone generator, a gas diffuser or sparger, a mixer, and a high pressure mercury vapor lamp. Pesticides

that have been reduced to levels of < 0.5 ppm from an initial solution concentration of ~50 ppm include: PCP, malathion, Vapam® and Baygon®. DDT has been reduced from 58 ppb in solution to < 0.5 ppb in 90 min (Mauk et al., 1976).

The principle of operation is as follows: the hazardous material in aqueous solution is placed in a plastic or steel reactor which is fitted with a gas diffuser or sparger at the bottom. Inside the reactor is a temperature sensing/controller device, an electrode for monitoring pH changes and a mixer or impeller. A high pressure mercury lamp contained in a quartz housing is placed in the solution. Ozone is generated by electrical discharge, and excess ozone may be vented to the atmosphere through a potassium iodide solution trap.

Two reactors, 10- and 21-liter volumes, have been tested to date (both considered to be bench-scale models). Houston Research, Inc., indicates, however, that scale-up to much larger sizes should be feasible. Figure 25 presents a schematic diagram of the bench-scale apparatus.

The overall chemical reactions that occur depend on the specific pesticide being detoxified; in general, the process involves activation of the organic molecule to a highly energetic state by UV illumination, followed by vigorous attack by ozone:

$$\text{Pesticide} + O_3 \xrightarrow[H_2O]{UV} CO_2 + H_2O + \text{Other simple species}$$

The actual mechanism is much more complicated than this simple reaction scheme indicates. Thus, pentachlorophenol may be initially dehalogenated followed by ring oxidation:

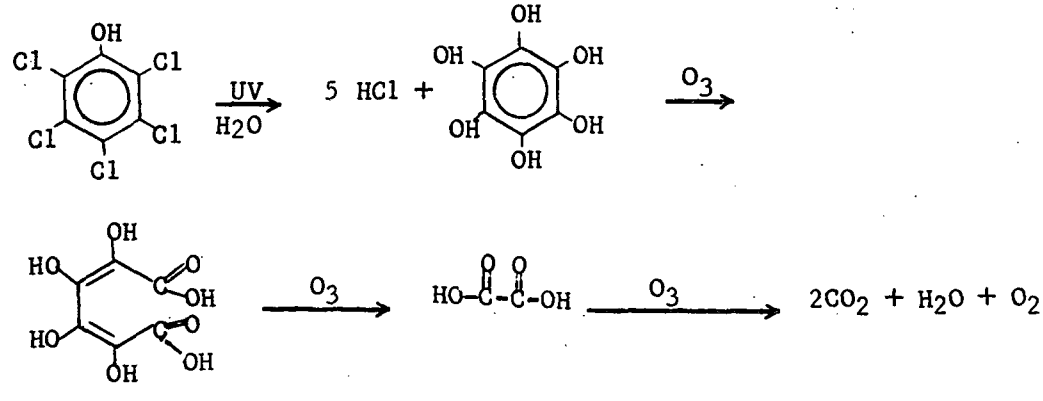

In the case of malathion at least four separate mechanisms are possible involving portions of the parent molecule. These are given in Figure 26. The overall reaction is:

$$C_{10}H_{19}S_2PO_6 + 64O_3 \longrightarrow 19H_2O + 20CO_2 + 45O_3 + P_2O_5 + 64O_2$$

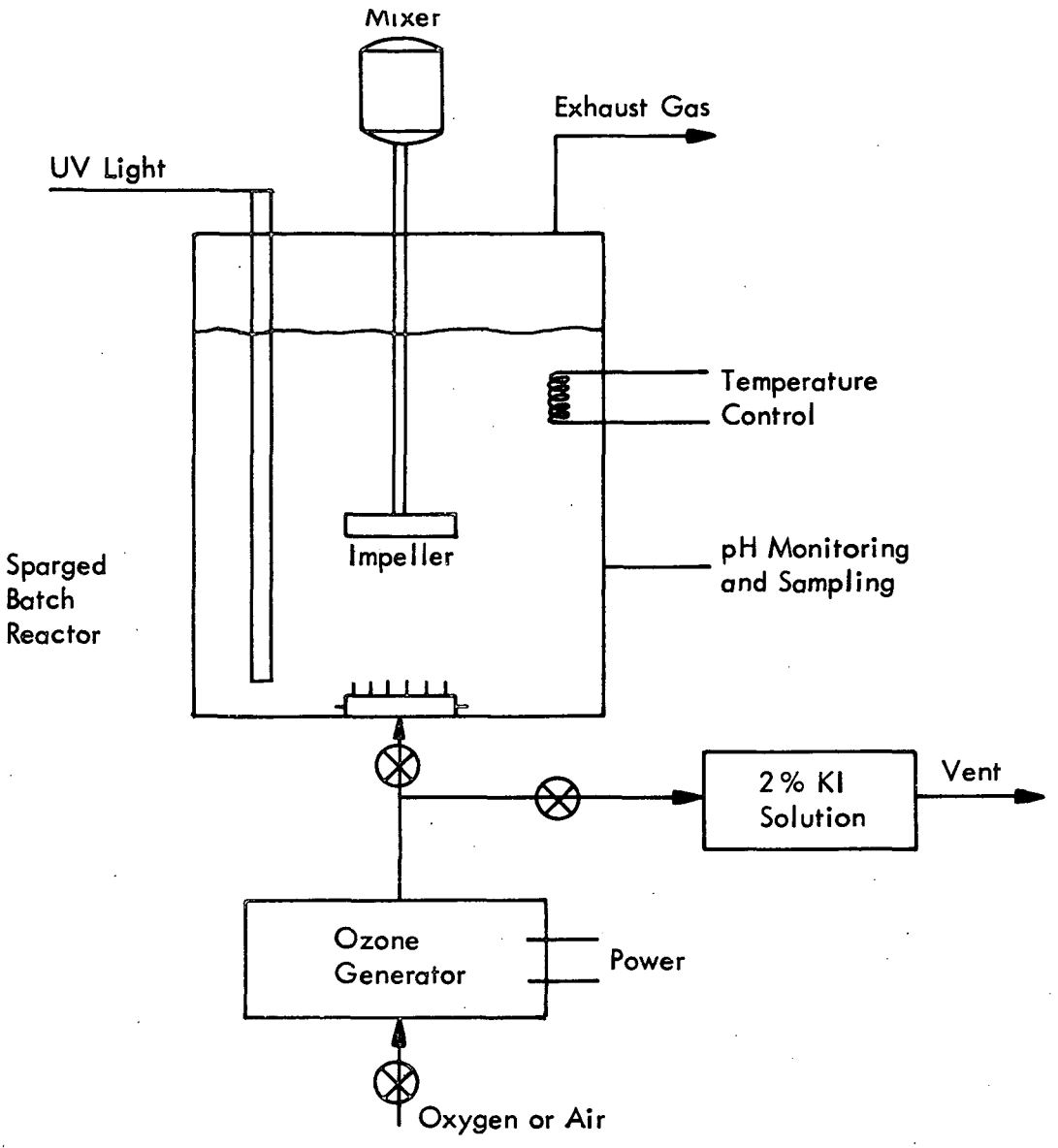

Source: Adapted from Mauk et al. (1976).

Figure 25. Schematic for ozonation/UV irradiation apparatus.

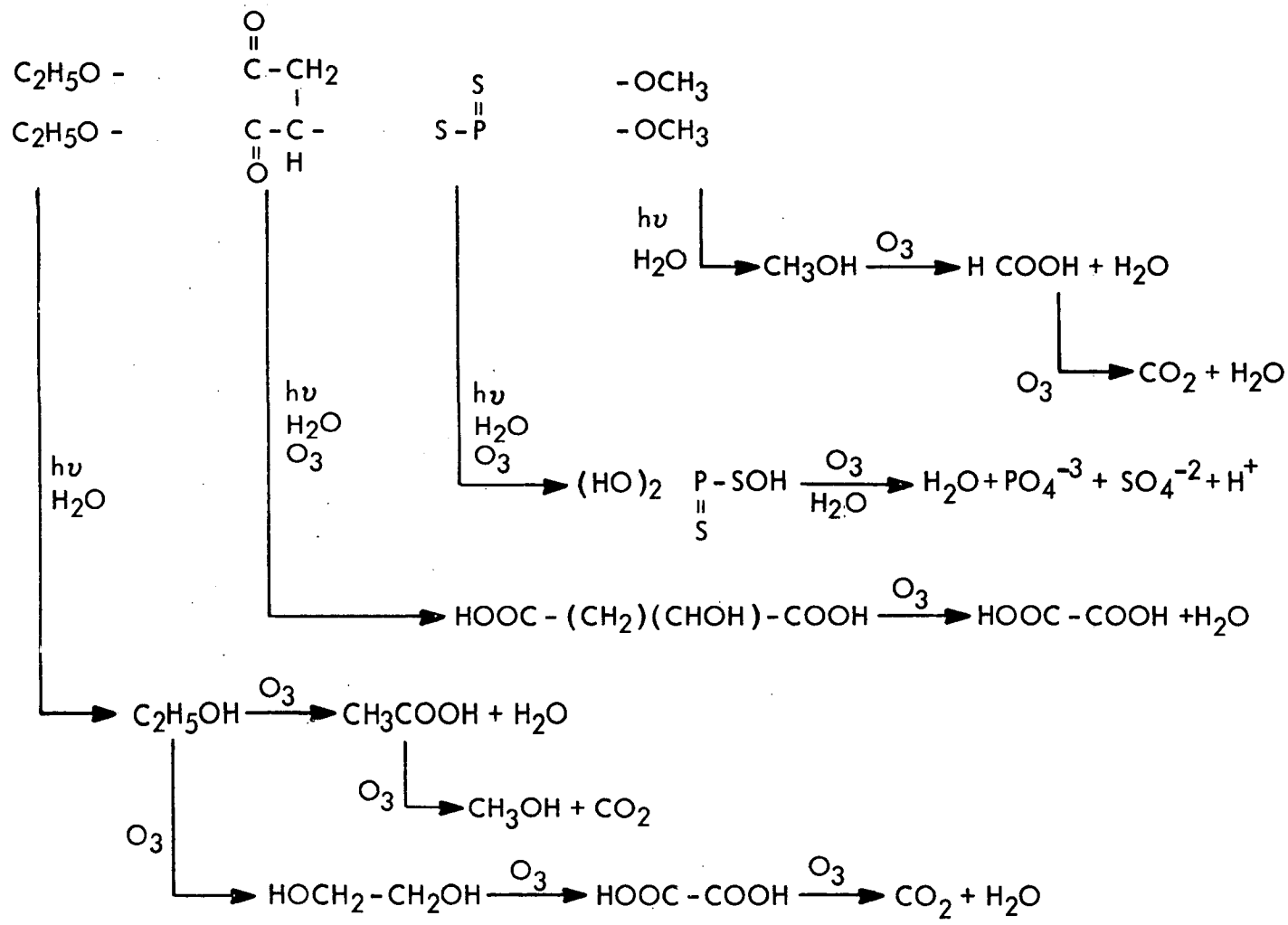

Source: Mauk et al. (1976).

Figure 26. Schematic diagram of potential reaction of malathion and ozone/UV irradiation.

Table 17 summarizes current results at the bench-scale level (20-liter volumes) for detoxification of pesticides by combined ozone/UV irradiation. The results are encouraging for individual pesticide AI as dilute solutions.

Only three classes of pesticides have been investigated to date. Successful detoxification of DDT, PCP, Baygon®, Vapam®, and malathion has been accomplished. All other pesticide classes are potential candidates for detoxification by this process. Organometallic pesticides may be converted to insoluble metal oxides or hydroxides by this process, e.g., As, Hg, Zn, Cu, etc., and collected by filtration.

To date, there have been no pilot-scale demonstrations of pesticide destruction by combined ozone/UV irradiation.

Similar work utilizing the combination of ozone/UV irradiation is being performed by Westgate Research Corporation (Zeff, 1977). Recently, Zeff and co-workers have studied the treatment of wastewater that contains residues of explosives manufacture (i.e., "pink water") and the treatment of pesticide intermediates in groundwater near Rocky Mountain Arsenal, Denver, Colorado. The results of these studies are best described as preliminary, and details have not been published. Cost estimates and other economic data are being developed for the treatment of explosives residues in process water (Roth, 1977). Zeff is currently developing pilot-scale systems for further ozone/UV irradiation studies. The systems will be able to process 4,000 to 40,000 liters/day (1,000 to 10,000 gal/day).

Sonocatalysis and Catalytic Ozonation--

Chen and Smith at Southern Illinois University performed some interesting studies on wastewater (Chen and Smith, 1971). These researchers studied the oxidation of phenol and o-chloronitrobenzoic acid (OCNB) in solution and wastewater by the joint combination of ultrasonic energy, air (or ozone), and by an activated Raney-Nickel catalyst at room temperature. By means of a rather simple apparatus involving a jacketed reaction vessel for controlling the temperature, an ozone generator and gas sparger, and an ultrasonic generator (800 kHz) and transducer, the investigators showed that large decreases in chemical oxygen demand (COD) and total organic content (TOC) were observed in 1- to 3-hr treatments.

Sonocatalytic ozonation of phenol produced a series of oxidized species including catechol, hydroquinone, pyrogallol, and ultimately small amounts of carbon dioxide and water. Thus, phenol in solution was reduced from 500 to 25 ppm by combined treatment with ultrasonic radiation, ozonation, and activated Raney-Nickel catalyst in 3 hr.

Other experiments with phenol at higher concentrations, e.g., 1 to 3 g phenol in 200 ml H_2O, were conducted for periods of up to 16 to 20 hr duration.

TABLE 17. TYPICAL RESULTS OF OZONE/UV IRRADIATION OF PESTICIDES

Pesticide	Solution temperature (°C)	Ozone concentration (ppm)	UV light concentration (w/ℓ)	Apparent percentage detoxification	Starting pesticide concentration (ppm)	Residual pesticide concentration (ppm)	Total time elapsed (min)
DDT	30	10	1.32	> 99.9	0.057	< 0.0005	30
PCP	30	10	1.32	> 99.3	71.0	< 0.5	15
Malathion	25	50	1.32	> 99.8	55.0	< 0.1	30
Baygon®	25	20	1.32	> 99.8	49.0	< 0.1	30
Vapam®	25	20	1.32	> 99.3	70.0	< 0.5	30

Source: Mauk et al. (1976).

Principal products again obtained were catechol, hydroquinone, quinone, and pyrogallol.

Sonocatalytic experiments with a saturated solution of OCNB ($\sim 2 \times 10^{-3}$ M) using air, oxygen, or ozone/oxygen mixtures indicated partial loss of OCNB in solution after 24 hr and production of three intermediate degradation compounds:

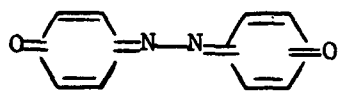

(postulated, unstable species)

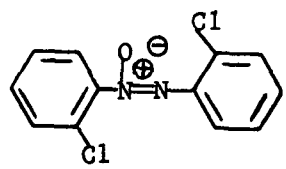

(postulated)

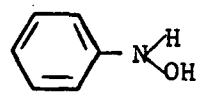

(identified)

An alternate system for treating wastewater containing phenol and ethyl acetoacetate has been investigated by Chen et al. (1975). These workers found that ozonation utilizing a special Fe_2O_3 catalyst was very effective in reducing COD and TOC in industrial wastewater in approximately 1 hr.

It is hypothesized that the catalyst promotes the use of two oxygen atoms in the ozone molecule for oxidation in contrast to other ozonation procedures which utilize only one oxygen atom per ozone molecule (Chen and Smith, 1976). It is further proposed that catalytic ozonation may eventually compete very successfully with other water purification processes through reduction of ozone demand and, hence, the total cost of ozone. Current ozonation production costs are \$0.20 to \$0.25/lb. The new catalytic ozonation process under development may lower the effective cost of ozonation significantly (Chen et al., 1975).

Recent experimental work by Chen and Smith has focused on chemically catalyzed ozonation rather than sonocatalysis. These workers are now of the opinion that essentially the same results for treatment of wastewater can be accomplished by catalytic ozonation without generation and expenditure of ultrasonic energy. Sonocatalysis and combination ozone/UV irradiation are feasible processes for wastewater treatment but are inherently more expensive than chemically catalyzed ozonation (Smith, 1977).

No work has been attempted on pesticides or other hazardous materials using sonocatalysis or catalytic ozonation, although there is sufficient preliminary evidence to expect success. If such work is to be done, the progress of treatment process should be monitored by measurement of the actual pesticide species rather than TOC and COD.

Wet Air Oxidation (Zimmerman Process)

The principle of operation is that a solution of any organic compound can be oxidized by air or oxygen if sufficient heat and pressure are applied. Thus, at temperatures of 150 to 340°C and 450 to 2,500 psig, sewage sludges will be oxidized to alcohols, aldehydes, acids, and finally at the higher temperatures and pressures, to CO_2 and H_2O in 30 to 60 min. Sulfur, nitrogen, and phosphorus may remain in solution as salts. Heavy metals may be precipitated as sulfates, phosphates, oxides or hydroxides, or may remain in solution (Astro, 1977). Figure 27 presents a schematic flow diagram of wet air oxidation.

Zimpro, Inc., Division of Sterling Drugs, Inc., promotes use of this process for sewage sludge stabilization. Lockheed Missiles and Space Company has applied the concept to reclamation of potable water on spacecraft. In 1976, the Lockheed Company sold its version of the wet air oxidation process to Astro Metallurgical Corporation of Wooster, Ohio, who presently market it as the Astrol™ Wet Oxidation Waste Treatment System.

The extent of actual pesticide destruction has rarely been determined; the percent reduction in TOC is given instead. For example, studies on DDT, 2,4-D, and pentachlorophenol (PCP) have been reported in this manner (Astro, 1977). Other studies of the wet air oxidation process applied to Amiben® herbicide process wastes indicate 88 to 99.5% destruction of the AI (Astro, 1977; Adams et al., 1976). Atrazine process wastes have reportedly been 100% destroyed (Astro, 1977).

Various waste sources have been treated by wet air oxidation. However, our discussion is restricted to published data related to pesticides and pesticide process waste. Table 18 indicates some specific applications and the degree of success in detoxification. Percentage TOC reduction measures residual total organic carbon as the present toxic material and all other organic breakdown products.

The previous table of pesticidal applications of the wet air oxidation process represents all the operating detoxification efficiency data readily available. No other qualitative or quantitative data for pesticides are available to the public, although Zimpro, Inc., has performed additional confidential and proprietary research and development of pesticidal applications for individual clients. According to one source at Zimpro, Inc.:

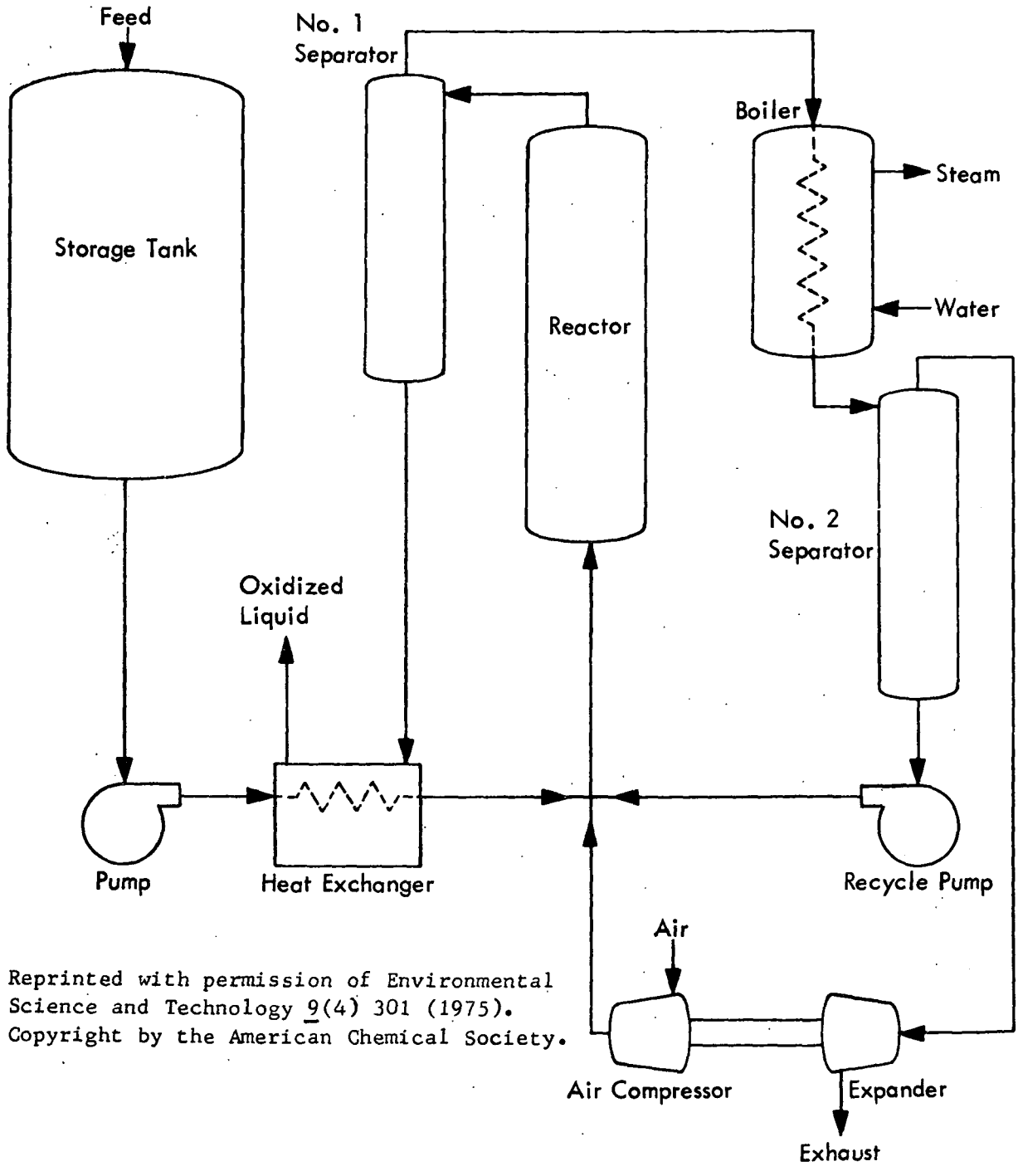

Reprinted with permission of Environmental Science and Technology 9(4) 301 (1975). Copyright by the American Chemical Society.

Figure 27. Schematic flow diagram of wet air oxidation.

TABLE 18. WET AIR OXIDATION PESTICIDAL WASTE APPLICATIONS

Waste source (specific constitutent)	Operating conditions Temperature °C	Pressure Pa (psig)	TOC reduction %	Specific constituent removed %
Amiben® herbicide process (dichloronitrobenzoic acid)	280	1.08×10^7 (1,560)	96	≥ 99.5
s-Triazine herbicide process (atrazine derivatives)	260	8.27×10^6 (1,200)	46	100
DDT	290	1.03×10^7 (1,500)	60	-
2-4-D	260	8.27×10^6 (1,200)	81	-
PCP	290	1.03×10^7 (1,500)	94	-

Source: Adams et al. (1976); and Astro (1977).

"Where dilute solutions of these materials are concerned, wet air oxidation represents an exceptionally economical solution to the problem as opposed to evaporation and incineration techniques. We base this contention on a very sizable backlog of both laboratory and pilot scale work. Unfortunately, confidentiality restricts us from even disclosing the names of the client firms or the scope of the work" (Flynn, 1977).

In the opinion of the authors of the present report, analytical results for the specific pesticide active ingredients before and after treatment and identification of the products of the treatment are needed to assess the applicability of wet air oxidation to pesticides. Merely monitoring the percent TOC reduction is inadequate. Much information is yet to be developed on the use of wet air oxidation disposal for all classes of pesticides.

LIQUID-SOLID PHASE DISPOSAL PROCESS: CHEMICAL FIXATION

There is only one candidate chemical disposal process, chemical fixation, that leads to disposal of toxic materials as a solid phase. The balance of this subsection is devoted to a presentation of the Chemfix process. We defer discussion of current land disposal operations until Section 7, since these are not based on physical-chemical treatment of pesticide wastes prior to disposal.

A chemical fixation process for the ultimate disposal of liquid wastes has been advanced at least since 1971 (Anon., 1971). Originally developed by Chemfix, Inc., of Pittsburgh, Pennsylvania, it is now marketed by Carborundum Environmental Systems, Inc., Carborundum-Chemfix Division. The initial conceptualization and experimental work was performed by J. R. Conner and has been described in a patent (Conner, 1974a). Chemical fixation has been discussed in at least two engineering conferences (Conner, 1971 and 1974).

The essential steps in the Chemfix process are as follows: commercial or domestic solid, liquid, or slurry wastes are mixed with an alkali metal silicate in the presence of a setting agent, which causes the entire mixture to gel and eventually to solidify and harden. Sodium silicate may be utilized as either a solid or a solution (water glass). Setting agents include Portland cement, lime, gypsum, and calcium carbonate. Figure 28 presents a schematic diagram of the process.

Predisposal options for the solid wastes include chopping, shredding, or crushing operations. The waste may then be combined with a silicate solution and a setting agent to form a mixture which can be poured or pumped into appropriately shaped molds; or the mixture can be pumped to land surfaces, e.g., abandoned strip-mining operations.

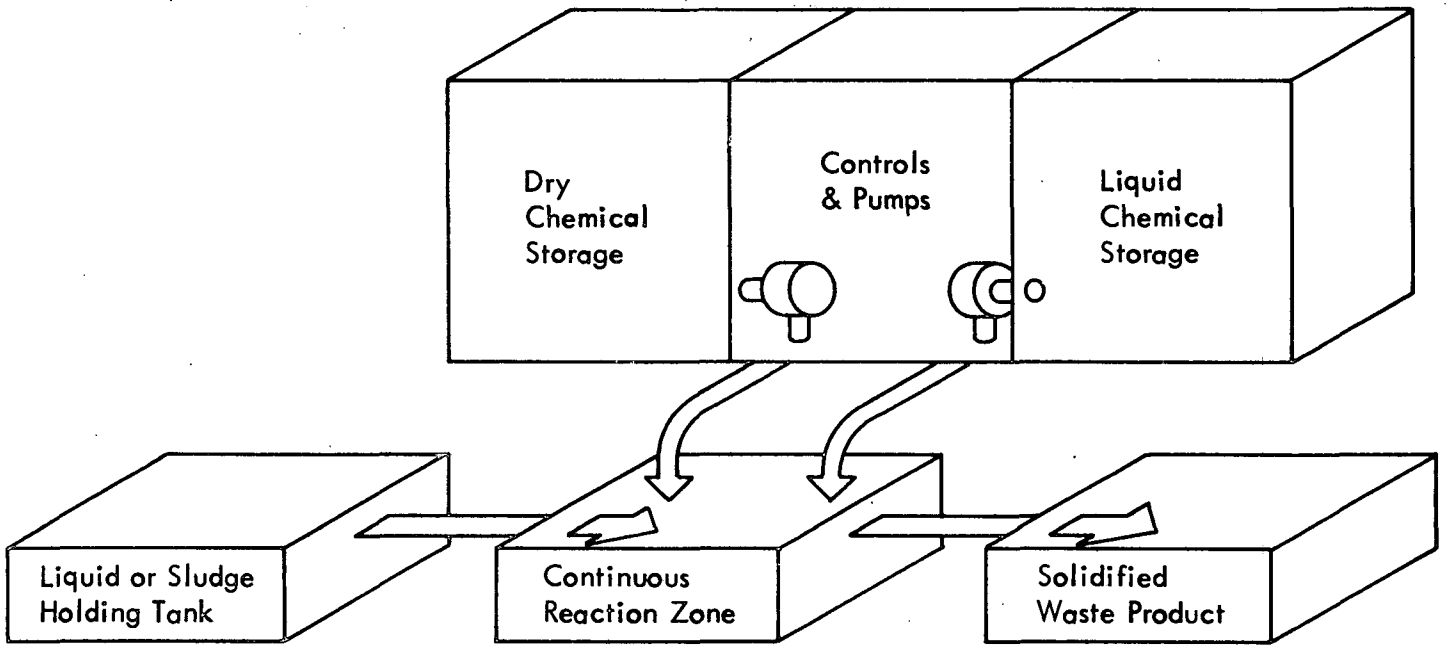

Source: Adapted from Anon. (1971).

Figure 28. Chemfix process schematic.

The final product, a chemically fixed waste material, is a solid matrix and has been termed a pseudomineral (Conner, 1974b). The cross-linked, three-dimensional array of covalent silicon-oxygen bonds and the polyvalent metal ions attracted to oxygen anionic groups form an inorganic polymer which displays desirable long-term storage properties, including high stability toward solubilization, and high melting point.

The metals which may form insoluble silicates, the gel structure which acts to retain water or moisture in the waste, the setting agents which cause the entire gel mass to form a solid, all aid in holding the waste firmly intact and separate from groundwaters. Organic wastes may be hydrolyzed by the alkaline medium or simply retained in the solid matrix with little decomposition. Bacterial growth does not normally occur in the physically immobilized waste. The latter points are of specific interest to the current assessment of the Chemfix process.

Favorable claims made for the Chemfix process include:

* High continuous throughput rate
* Ability to process low solids wastes without dewatering
* Small volume increase due to chemical additives
* Ability to react with complex waste mixtures; e.g., metal finishing wastes
* Controlled rate of solidification
* Controlled range of physical and mechanical properties for use as landfill
* Low toxicity and leachability of final solid material
* Relatively low cost
* Mobility of the process unit

Of crucial importance to the application of this technique is the question, How stable are chemically fixed wastes in actual environmental conditions under the influence of ambient weather, light, heat, and microorganisms? Claims are made that grasses and crops may be grown over chemically fixed electronics manufacturing wastes containing highly toxic metal ions and metal cyanides. No abnormal uptake of any of the metals by various grasses was observed (Conner, 1974b).

Acid leaching tests with sulfuric (pH 1.0), hydrochloric (pH 1.0), nitric (pH 3.0), and acetic (pH 3.0) acids of chemically fixed waste that contained large amounts of metallic compounds indicated that < 0.1 ppm of any metal ion was released after the waste material had been exposed to the equivalent of 250 cm (100 in.) of rainfall as dilute acid.

Long-term changes in the chemically fixed waste include: drying and shrinkage, loss of the gel structure, and possible microfracture; no increase in leachability is claimed.

In spite of the wealth of practical experience and knowledge based on the disposal of > 100 million gallons of a wide variety of industrial wastes, pesticide disposal by the Chemfix process has apparently not been attempted. Contact with representatives of Carborundum Environmental Systems, Inc., and J. R. Conner produced no laboratory or developmental engineering data for any pesticides.

Opinions were offered, however, on the potential applicability of the Chemfix process to various types of pesticide wastes. This process was not recommended for disposal of water-soluble pesticides. These materials would tend to leach from the silicate matrix in the presence of groundwater if the matrix should suffer microfracture. Oily or solvent-based pesticides are likewise not recommended for disposal. These materials are incompatible with the aqueous gel structure and, in time, may tend to bleed from the matrix. Further, there may be little or no decomposition of the pesticide wastes within the matrix. Conner (1977) suggested that many pesticides might be handled much in the same manner as low level radioactive wastes: treat the wastes by the Chemfix process, store in a drum, and dispose of the fixed water in a secure landfill (Class 1 site). This technique is a proven practical mode of operation.

A review of the limited data and these opinions suggests caution in considering routine disposal of pesticides by the Chemfix process at this time; answers are needed to several questions about the basic process itself and about the potential long-range environmental impacts of the use of this process.

CATALYTIC LIQUID PHASE DISPOSAL PROCESSES

This subsection of the report is concerned with two topics having a catalytic basis for influencing the rate of chemical change. Specific examples having a bearing on pesticide disposal or reprocessing include:

* Catalytic dechlorination utilizing nickel boride

* Reductive degradation utilizing metallic couples

Each detoxification process is described below.

Catalytic Dechlorination Utilizing Nickel Boride

One promising area that Dennis and Cooper (1975) have pursued is that of catalytic dechlorination by nickel boride which is obtained *in situ* from nickel chloride and sodium borohydride. Thus, a series of studies of the treatment of DDT, heptachlor, chlordane, and lindane by nickel boride have shown that chloride ion is rapidly generated over 30 min at room temperature in methanol-water mixtures. Maximum dechlorination is obtained in methanol with a molar ratio of pesticide:$NaBH_4$:Ni(II) is 1:15:0.5.

In the case of DDT, the primary products were:

1-Chloro-2,2-bis(*p*-chlorophenyl)ethane

1,1-Bis(*p*-chlorophenyl)ethane

1-*p*-Chlorophenyl-1-phenyl ethane

1,1-Diphenyl ethane

Lesser amounts of the following were formed:

1,1-Dichloro-2-*p*-chlorophenyl-2-phenyl ethane

1-Chloro-2-*p*-chlorophenyl-2-phenyl ethane

The presence of these materials was confirmed by combined gas chromatography/mass spectrometry (GC/MS) (Dennis and Cooper, 1975).

The major product isolated in the dechlorination of heptachlor and chlordane is given below:

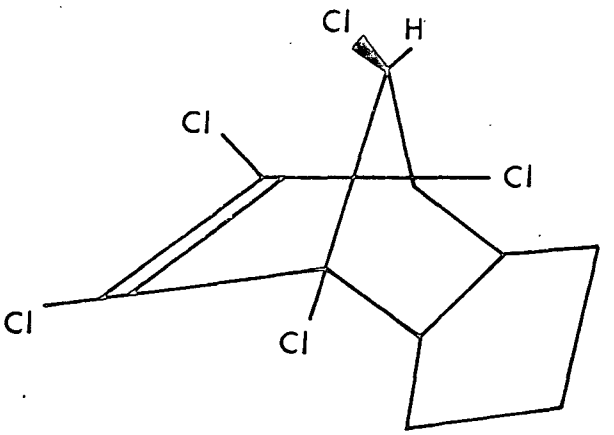

(anti-form)

No unreacted heptachlor remained in the reaction mixture after 30 min, but no totally dechlorinated heptachlor was found (Dennis and Cooper, 1976).

Other compounds present in lesser amounts were:

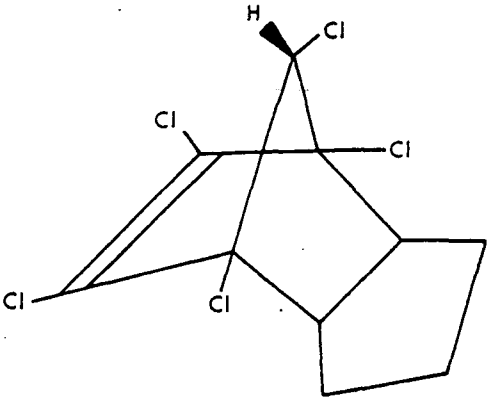

(syn-form)

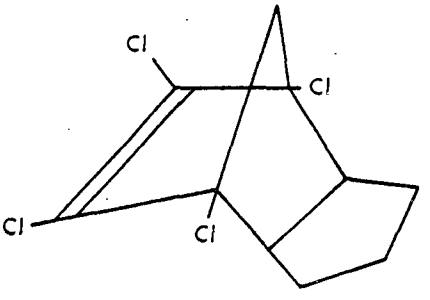

Traces of further decomposition products were found, including a dichloro-compound,

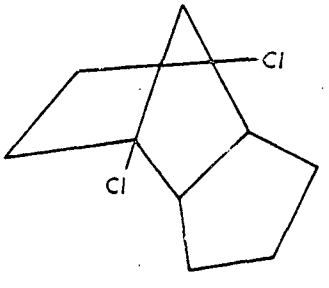

Recently, these investigators have catalytically dechlorinated lindane by use of alcoholic-nickel boride solutions. Thus, lindane (gamma-isomer of 1,2,3,4,5,6-hexachlorocyclohexane) is converted rapidly to benzene (61 to 79%), cyclohexene (16 to 35%), and cyclohexane (3 to 11%) depending on the solvent

mixture. No trichlorobenzene derivatives were observed, but traces of other compounds having four and five chlorine atoms per molecule were detected by combined GC/MS (Dennis and Cooper, 1977a).

The authors indicate that nickel chloride/sodium borohydride alcoholic-aqueous systems which form nickel boride appear feasible as a possible disposal method for highly chlorinated pesticides although they caution that the toxicity and biodegradability of reaction product mixtures should be determined (Dennis and Cooper, 1976). The process should only be considered useful for small-scale applications due to solvent and sodium borohydride costs (Dennis and Cooper, 1977b).

Reductive Degradation Utilizing Metallic Couples

A catalytic reductive degradation process utilizing metallic couples is described in a U.S. patent by Sweeny and Fischer (1973). The claim is made that various metallic couples (e.g., zinc/copper, iron/copper, aluminum/copper, etc.) in the presence of dilute acids (pH 1.5 to 4.0) caused the decomposition of DDT at or near room temperature. The data shown in the patent describe decomposition of dilute DDT emulsifiable concentrate in wash water. Typically, the concentration of an effluent containing 400 to 500 ppm DDT could be lowered to $\sim$ 1 ppm DDT in 1 hr at 75°C. Products of the reaction included 1,1-bis-(p-chlorophenyl) ethane (oral rat LD_{50} 1,000 mg/kg) (Christensen and Fairchild, 1976). Other reaction conditions and metallic couples yielded other products, e.g., dimerized DDT formed by the loss of two chlorine atoms.

This reductive degradation technique has evolved to the pilot plant demonstration stage, and wastes containing endrin, chlordane, and heptachlor are being tested. Figure 29 presents a schematic diagram of the process. The system consists of a filter to remove solids which might clog the catalytic degradation column, a mixing chamber for pH adjustment and a reduction column or bed (Sweeny, 1977). The process water to be treated for removal of halogen containing organic materials is filtered, the pH is adjusted ($6 < pH < 8$) and the influent flows to a catalytic reduction bed which contains evenly distributed sand and metallic particles of similar size. The column beds are 0.9 m ID by 2.4 m in length (3 ft x 8 ft). The current installation can carry up to 400 liters/min (100 gal/min).

Performance data are only available for a bench-scale operation which processes 1.7 liters/min, but these indicate a reduction in aqueous concentration of endrin, chlordane, and heptachlor from 50 ppb to $\sim$ 0.02 ppb. Current work on a pilot plant demonstration of reductive degradation is in progress (Des Rosiers, 1977).

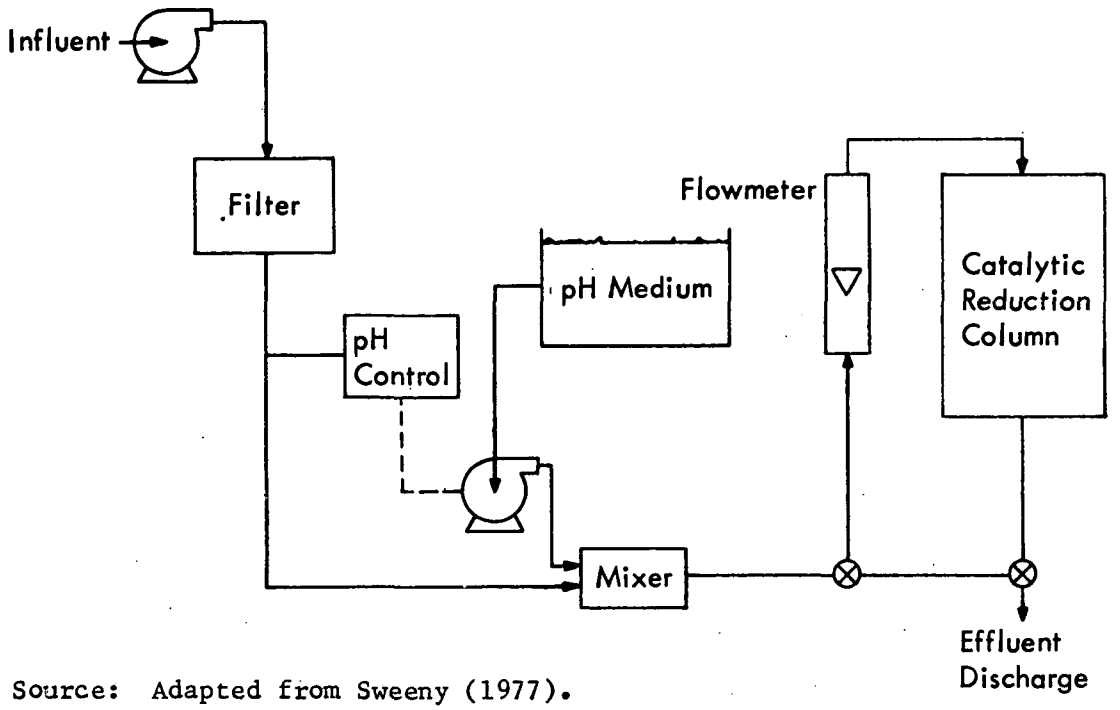

Source: Adapted from Sweeny (1977).

Figure 29. Schematic flow diagram for reduction degradation process.

POTENTIAL IMPACTS

This subsection discusses the potential environmental and economic impacts of pesticide disposal by various physical and chemical technologies.

Potential Environmental Impacts

We shall combine the various physical and chemical procedures within each phase category as previously defined (gas, liquid, liquid-solid, and catalytic liquid) to develop an overview of environmental impact.

Gas Phase Methods--

Microwave plasma degradation is a controllable method which yields innocuous products like CO_2 and H_2O, but also potentially hazardous products, SO_2, CO, Cl_2, HPO_3, etc., depending on the pesticide. The latter materials could be effectively retained in a cold trap and then allowed to enter an alkaline scrubber unit for neutralization. The process has the advantage of continuous monitoring by GC/MS and is interruptible if difficulties appear. Further, the contemplated scope of utility is limited, and thus, the potential for widespread adverse effects is minimized. In contrast to the photolysis process, microwave detoxification appears to have definite practical advantages and minimizes environmental impact and risk.

Attempts to destroy large quantities of unwanted pesticide by photolytic degradation by surface spreading and direct exposure to the sun should be made only after laboratory data and preliminary field trials have proved conclusively that the method is totally reliable, the volatility of unreacted pesticide is not significant, the mechanism of destruction is known, the rate of reaction is known, the final products, including principals and by-products are known, and the question of residual toxicity has been answered by aquatic bioassay.

Other special considerations may be required, e.g., if it rains prior to complete degradation, will the excess water cause runoff contamination and/or allow the material to penetrate the soil whereby exposure to UV light is minimized? In exposure to heat and sunlight, will significant evaporation losses of the pesticide occur prior to complete degradation? Will the final products, including by-products, be volatile and will they impact on the environment? If the pesticide reacts in the soil, will the final products or by-products have impacts?

If, and only if, all of the above required facts are known, may the unwanted pesticide be spread on a suitable surface (e.g., soil or inert membrane), sprayed with a suitable photosensitization chemical, and then allowed to degrade by sunlight, heat, exposure to the air and moisture, etc. The process and resulting effluents must be controllable at all times.

We conclude that large-scale application of photolysis may have potential adverse environmental implications that cannot be evaluated with the current data base. The very nature of the process does not readily lend itself to conventional air pollution control devices (e.g., air scrubbing units) if an adverse effect occurs. On the other hand, runoff control may be achieved by containment. Protection from rain could in theory be achieved by temporarily covering the surface area.

In the words of Plimmer (1977), "Without this basic data, there is little point in discussing the question of installation design and calculation of operating costs." The practical application of photolysis to degrade large or small quantities depends on many factors still not fully understood in the laboratory.

Liquid Phase Methods--

The procedures to be considered include:

* Activated carbon and resin adsorption

* Hydrolysis

* Molten salt bath methods

* Ozone/UV irradiation and other ozonation methods

* Wet air oxidation

Each procedure is controllable and interruptible through standard engineering practices. Special consideration needs to be given molten salt bath methods which may require scrubber units and/or traps to control vapors and will require safety devices to protect the work environment and the immediate surroundings.

The other processes in this category have a low environmental risk associated with their application. Activated carbon and resin adsorption concentrates pesticides from solution for further processing. The carbon or resin is generally recycled for economic reasons, and the released pesticide must be detoxified by an alternate process. Thus, the environmental impact of activated carbon and resin adsorption is nil up to the point of regeneration and final disposal of the concentrated pesticide.

The various other liquid phase procedures have a low potential for environmental impact. All resulting degradation products will be innocuous if the process has been operated properly. The question of residual solution toxicity is one which can be answered only by final testing of the resulting product mixture prior to release to the environment. Use of temporary holding tanks or lagooning may be required.

Liquid-Solid Phase Method--

The Chemfix process immobilizes wastes and hazardous materials in a silicate matrix. No experimental data exist for the disposal of actual pesticides by this method. A potential exists for environmental insult by residues if the pesticide does not degrade or detoxify in the alkaline silicate media. Further, the permanence of immobilization of the pesticides in the silicate matrix is uncertain. If the pesticide is water soluble and does not suffer chemical degradation, then its release from the matrix could affect soil and water quality in the vicinity of the disposal site. One suggestion that has been made to minimize environmental impacts in the disposal of pesticides by the Chemifix process is to handle them in a manner similar to that for low level radioactive wastes: bind the wastes in silicate slurry matrix, drum them, and bury them in a secure landfill (Class 1 site). Such a procedure should guarantee as nearly as possible the safe disposal of pesticides, using the Chemfix process.

Catalytic Liquid Phase Methods--

Both processes, catalytic dechlorination using nickel boride and reductive degradation using metallic couples, are potentially controllable and interruptible, if need be, to handle emergency situations. Catalysts consist of metallic couples, nickel boride, or Raney-Nickel which may result in a loss of traces of heavy metals in the liquid waste streams and thus may require further treatment of the effluent. The residual toxicity of the resulting pesticide waste streams must be tested prior to release.

Potential Economic Impacts

The potential economic impacts of various physical and chemical pesticide disposal methods will be analyzed categorizing each process by phase as was previously done for the environmental assessment. Large information gaps exist, however, and economic cost comparisons are difficult to make.

Gas Phase Methods--

Microwave plasma destruction has inherent advantages over alternative thermal techniques such as pyrolytic, incineration, and molten salt baths. For example, since the energy for promotion of chemical reaction comes primarily from free radicals rather than molecular motion (heat energy), the entire detoxification/destruction zone operates only slightly above room temperature, $\sim 50^{\circ}C$. The materials of construction, e.g., insulation, bulkheads, etc., generally associated with furnace or incineration devices are considerably simplified from a gross or physical standpoint. The apparatus has the potential advantage of being made into a mobile unit, with a relatively low initial cost and a leak-proof character.

LPARL has provided cost estimates for destruction of phenylmercuric acetate (PMA) in the current laboratory unit. Table 19 indicates that at a feed rate of 3.0 kg/hr (6.5 lb/hr) and 4.3 kw of microwave power and assuming current costs of oxygen gas and electrical energy, the operating cost (not including labor and overhead) may be as low as $0.15/kg ($0.07/ lb).

A second cost estimate for the destruction of large quantities of PMA utilizing a proposed 45 kg/hr (100 lb/hr) unit has been offered by LPARL, which includes recovery and sale of mercury metal. The following assumptions were made in estimating net profit per pound of PMA destroyed by the microwave plasma unit:

1. Electrical costs are $0.012 kw-hr, industrial usage.

2. Liquid oxygen costs are $0.005/SCF, large volume usage. Add $3,000/year storage fee.

3. Steam costs are $4.40/1,000 kg ($2.00/1,000 lb).

4. Labor costs are one-half man per automated unit, i.e., one man operates two units, $12/hr.

5. In the case of PMA, the credit for metallic mercury is $3.30/kg ($1.50/lb). This is based on a requirement for future purification. At present, the purity of the recovered metal has not been determined. A more pure product obviously has greater value, up to $8.80/kg ($4/lb).

6. The estimate for capital costs is $100,000.

LPARL assumes a three-shift, 330 day/year operation. PMA throughput is 23 kg/hr or 180,000 kg/year (50 lb/hr or 400,000 lb/year). Process requirements to destroy PMA on a per pound basis are: oxygen, 4.3 SCF; steam, 1.5 lb; electrical energy, 1.6 kw-hr. Table 20 summarizes total process costs and net profit per unit weight of PMA destroyed.

For detoxification of material such as malathion or PCB wastes where few or no useful by-products are recoverable, the costs may be higher. In oxygen and steam plasmas, for example, the costs are calculated as $0.48/kg and $0.44/kg, respectively.

All cost data contained in Tables 19 and 20 were estimated in 1976 and may be updated to 1977 price levels using an 8%/year inflation rate as a first approximation.

TABLE 19. ELECTRICAL AND CARRIER GAS COSTS FOR PLASMA REACTIONS IN LABORATORY REACTOR

Material	Carrier gas[a/]	Effective (absorbed) microwave power (kw)	Feed rate (g/hr) (lb/hr)	Carrier gas flow (std. ℓ/hr) (scfh)	Gas cost ($/lb)	Total power consumed (kw-hr/lb)	Power cost ($/lb)[b/]	Total cost ($/lb)	Total cost ($/kg)
PMA-30	O_2	4.6	1,020 (2.25)	960 (34)	0.18	4.7	0.06	0.24	0.53
PMA-30	O_2	4.0	2,380 (5.25)	792 (28)	0.064	1.9	0.023	0.087	0.19
PMA-30	O_2	4.3	2,950 (6.5)	792 (28)	0.054	1.6	0.019	0.07	0.15

Source: Bailin and Hertzler (1976).

a/ O_2, $0.012/ft^3.

b/ kw-hr, $0.012, industrial usage.

TABLE 20. TOTAL PROCESS COSTS AND NET PROFIT FOR MICROWAVE PLASMA DESTRUCTION OF PMA

	Oxygen	Steam
Variable costs		
Operating labor	$47,020	$47,020
Maintenance (4% of investment)	4,000	4,000
Oxygen or steam	11,600	1,200
Electricity	7,680	7,680
Total variable costs	70,300	59,900
Fixed costs		
Taxes and insurance (2%/year)	2,000	2,000
Capital recovery (10 years - 10%)	16,250	16,250
Total fixed costs	18,250	18,250
Total annual costs	88,550	78,150
Total income from recovered mercury	108,000	108,000
Total net profit	19,450	29,850
Net profit per pound treated	0.049	0.075
Net profit per kilogram treated	0.108	0.165

Source: Bailin and Hertzler (1976).

As microwave power technology advances, the electrical costs should decrease as the result of improvements in the coupling of microwave power to the plasma reactors. The potential for steam plasmas with their low cost, plus their capability to form their own vacuum, is readily apparent and can, therefore, be considered for further reductions in electrical power requirements.

The above data have been derived for a permanent-type disposal center, which may then be compared with other methods operating at similar levels of throughput. The costs associated with a projected mobile or truck-bed type detoxification unit will vary, depending on the initial capital and labor costs. The latter will depend in part, on the distance to the user's site and the toxicity of the materials to be treated.

The economic impacts of the large-scale application of photolytic degradation technologies are unknown. Significant factors may include: land availability and cost; amount and kind of chemicals required; application costs (including any aircraft over-spraying operations with photosensitizers); cost of liners, covers, and dikes; labor; monitoring; etc. As stated earlier in this report, the economic aspects of photolytic degradation have not been adequately addressed and must await successful practical laboratory and field demonstrations before the needs and limitations of this technology can be further defined.

Liquid Phase Methods--

Various liquid phase degradation procedures have been proposed, but few have been demonstrated on a large scale. Economic cost estimates are available for activated carbon or resin adsorption and wet air oxidation. Land availability and cost, as well as costs of reactors, chemicals, labor, energy, and emission control facilities need to be estimated.

Economic cost estimates have been developed for two examples of wastewater treatment by activated carbon and resin adsorption. Cost data for carbon adsorption of 2,4-D, MCPA, and 2,4-DB wastes cited earlier in Section 6 are presented in Table 21 (Rizzo, 1972). The estimated capital investment and direct operating costs have been updated to 1977 using an inflation rate of 8%/year.

The second economic cost estimate involves a facility which treated chlorinated pesticides in wastewater (Kennedy, 1973). Table 22 presents various economic costs to treat an effluent containing 200 ppm of chlorinated pesticides at 600,000 liters/day (150,000 gal/day). The resultant effluent contains 1 ppm pesticides. The table compares costs for conventional treatment by granular activated carbon and resin adsorbent. The lower costs associated with resin adsorbent are attributed to more rapid adsorption kinetics with a correspondingly low volume of adsorbent required and greater regeneration efficiency.

TABLE 21. OPERATING CHARACTERISTICS AND ECONOMIC COSTS ASSOCIATED WITH HERBICIDE REMOVAL FROM WASTEWATER BY CARBON ADSORPTION

Category	Quantity
Flow rate	600,000 liters/day (150,000 gal/day)
Influent contaminants	
phenols and cresols	10 ppm
chlorophenols and chlorocresols	100 ppm
chlorophenoxyacetic acids	100 ppm
octyl and other alcohols	1,000 ppm
total dissolved inorganic salts	62,000 ppm
Effluent contaminants (total phenolics)	1 ppm
Contact time	280 min
Total carbon adsorber beds	8,200 kg (18,000 lb)
Estimated capital investment (1972)	$300,000
(1977)	$420,000
Direct operating costs (1972)	$0.095/1,000 liters ($0.36/1,000 gal.)
(1977)	$1.33/1,000 liters ($0.50/1,000 gal.)

Source: Rizzo (1972).

TABLE 22. ECONOMIC COST COMPARISONS FOR TREATMENT OF CHLORINATED PESTICIDES WASTEWATER BY ACTIVATED CARBON AND RESIN ADSORBENT

Category	Granular activated carbon	Resin adsorbent
Capital investment (uninstalled)	$175,000	$99,500
Operating expenses[a]	$73,000/year	$45,150/year
Total operating costs[a]	$0.35/1,000 ℓ ($1.33/1,000 gal.)	$0.22/1,000 ℓ ($0.83/1,000 gal.)

Source: Kennedy (1973).

a/ Includes equipment depreciation over 10 years.

The estimates in Table 22 by Kennedy (1973) are for the year 1972. If these costs are adjusted to reflect 1977 price levels, the total operating costs are estimated to be $0.49/1,000 liters using activated carbon and $0.31/ 1,000 liters using resin adsorbent.

Hydrolytic and other simple chemical treatment methods have not received wide-scale application, and no economic cost estimates have been developed for them. In general, simple chemical treatment methods where feasible may be relatively less expensive compared to other capital and energy intensive alternatives, e.g., molten salt bath procedures.

In the absence of actual cost data for the capital investment, and operating and depreciation costs per pound of pesticide destroyed, we estimate the total cost of a mobile molten salt bath combustion unit with baghouse and reprocessing components for 5 years of operation as follows:

Capital investment:		$1.0 million
Operating costs (5 years):		
Labor ($60,000 to $100,000/year)		$0.3 to $0.5 million
Energy, Maintenance, Raw material	(5 years)	$1.0 million
Total cost		$2.3 to $2.5 million

We assume 180 days/year operation at 2.7 MT/day (3 tons/day) of pesticide processed. Thus, the total output over 5 years is 2,450 MT (2,700 tons) of AI. The cost per unit weight of pesticide processed is $1,000/ton, $0.50/lb, or $1.10/kg.

This estimated cost would appear to place molten salt bath procedures in an unfavorable economic position compared to other alternatives.

No cost estimates are available for the destruction of pesticide by ozone/UV irradiation. Principal capital equipment costs include the reactor, ozone generator and power supply, and the UV irradiation source and power supply. Principal operating costs include electrical energy and labor. In general, ozonation methods would be more costly than simple chemical treatment but less costly than more energy-intensive methods. Ozonation processes may be competitive if applied to dilute pesticide solutions on a large scale as in water purification.

Economic cost estimates for wet air oxidation have been reported by Adams et al. (1976) for a Zimpro, Inc., system to treat Amiben® herbicide waste process waters. The wastes treated were the isomers of dichloronitrobenzoic acid rather than the AI itself, dichloroaminobenzoic acid. Additional waste treatment after the wet air oxidation step includes extraction neutralization, and activated carbon treatment. Estimated costs are given in Table 23. The costs may be updated to 1977 by applying an 8% price level increase. Thus, estimated total operating costs may be near $980,000 per year, or $0.39/kg ($0.18/lb).

Liquid-Solid Phase Method--

Chemical fixation costs for disposal of pesticides have been estimated at $0.05/liter plus transportation costs and landfill fees if the wastes are chemically fixed in a silicate matrix and the wastes are drummed (Conner, 1977). This represents a relatively low cost method if it is environmentally acceptable.

Catalytic Liquid Phase Method--

These procedures are still under active research and development, and economic cost comparisons have yet to be developed. Catalytic dechlorination utilizing nickel boride is almost certain to be an expensive procedure since the cost of sodium borohydride is near $17.60/kg in carload lots ($8.00/lb) (Chemical Marketing Reporter, 1977).

Reductive degradation utilizing inexpensive metallic couples to detoxify pesticides holds promise of a cost-effective procedure. Cost estimates are under development (Des Rosiers, 1977).

TABLE 23. ESTIMATED COSTS OF WET AIR OXIDATION OF AMIBEN® WASTE

Category	Volume and cost	Cost per unit weight
Capacity	151 cu m/day (40,000 gal/day)	
Pesticide loading, 5% concentration	7,600 kg/day (16,700 lb/day)	
Estimated capital investment	$2.2 million	
Variable operating costs	$299,100/yr	$0.119/kg
Fixed operating costs	$594,000/yr	$0.239/kg
Additional operating cost for follow-on treatment	$15,000/yr	$0.006/kg
Total estimated operating costs (330 day/yr operation)	$908,100/yr	$0.364/kg $0.165/lb

Source: Adams et al. (1976).

FUTURE RESEARCH NEEDS

Many of the pesticide disposal methods discussed in Section 6 are underdeveloped and remain at the bench or pilot plant levels. Further, basic environmental impacts and economic cost estimates have yet to be determined. On the other hand, at least three methods (activated carbon or resin adsorption, wet air oxidation, and reductive degradation) are at or near the point of practical demonstration. This subsection will indicate future research needs for various pesticide disposal methods. The organization of topics remains unchanged.

Microwave Plasma Technology

This technology is being advanced from the bench scale, 0.5 to 3.0 kg/hr (1 to 7 lb/hr), to what has been described as an expanded scale, 4.5 to 14 kg/hr (10 to 30 lb/hr). It remains, however, largely an investigative tool. Destruction of representatives of several classes of pesticides, including an organometallic material, have been demonstrated.

Development of a practical device for destroying 25 to 50 kg/hr (50 to 100 lb/hr) seems highly probable. Such a device would be mainly of value to hospitals, clinics, research facilities, industrial firms, educational institutions, etc., which must dispose of relatively small quantities of toxic materials. It remains to be seen if large-scale units, 500 kg/hr (1,000 lb/hr), can be fabricated and successfully and economically operated. Such units could be valuable in solving pesticide field disposal problems. Continuing development of this detoxification technique is required, with the goal of developing larger units or banks of units which are mobile.

Photolysis

This method has been demonstrated at the practical level only for the environmental degradation of TCDD. Other photolysis demonstrations for several classes of pesticides have been made at the research level, and these remain merely laboratory, albeit important, studies. The entire photolytic process is underresearched, underdeveloped, and hence, underutilized. Further research and development in this field is required, with the goal of practical demonstrations of field disposal of pesticides.

The progress made in the area of pesticide photolysis over the last 15 years or so has been slow, but the area of investigation has been fraught with experimental difficulties. Early investigations focused on qualitative observations; these were followed by studies that focused on identification and determination of structures of substances formed. Investigations have proceeded from laboratory conditions, using pure materials, to field conditions in which such factors as light, air, water, pesticide AI, and the formulated synergists

are all considered in the photolytic process. The concept of photosensitization has not been capitalized upon.

Perhaps Crosby (1977) assessed the state of the art of photolysis as well as any one when he stated, "Although photoreduction is hardly a panacea, it obviously holds promise for the natural destruction of residual chemicals, the destruction of toxic wastes from manufacturing and even the intentional decontamination of polluted environments." It need hardly be emphasized that the data base for rates and efficiencies of photochemical reactions must be expanded.

Activated Carbon and Resin Adsorption

These methods are feasible for removing pesticides in water at low concentrations ($\leq$ 100 ppm). Demonstrations using an Amberlite™ resin are in progress at Velsicol Chemical Company in Memphis, Tennessee. But in its present state this technology is not useful for solving field disposal problems for pesticides. It is much better suited for handling process waters at the point of manufacture or formulation. Continued development of this and similar projects for removal of pesticides from process wastewater is advisable.

Hydrolysis

Simple alkaline hydrolysis appears viable as a potential method of field disposal for pesticides in certain pesticide classes. This method has been demonstrated at the research level by various investigators. To the best of our knowledge, no recorded case exists of the large-scale use of alkaline hydrolysis to solve a field disposal problem. But the technology is complete and simple and may be effective for many organophosphorus and carbamate compounds providing there is no residual toxicity problem, as observed by Meier et al. (1976). Large-scale application of alkaline hydrolysis or any chemical treatment method may result in severe heat of mixing or heat of reaction problems and resulting hazard to workers and the environment.

Kennedy (1969, 1970); Dennis (1972); Ottinger (1973); and Lawless et al. (1975) all recommend alkaline hydrolysis for certain pesticides. Wolverton's work (1973) using monoethanolamine in a glycol ether is potentially useful for hydrolyzing organophosphorus pesticide spills and rinse waters occurring from aircraft spraying operations.

The evidence in the literature is convincing regarding the potential utility of alkaline hydrolysis for handling certain pesticide field disposal problems. Questions regarding potential residual toxicity of the resulting products and solutions must be answered.

Molten Salt Baths

Demonstrated destruction of several classes of pesticides at the research scale has been achieved. Although no tests at the pilot plant scale have been made up to the present time, the technique may well work satisfactorily at considerably larger throughput rates than have been attempted thus far. Atomics International has designed a mobile molten salt bath unit for handling field disposal problems of toxic materials. However, the project is inactive at present for lack of funding. Environmental and economic cost impacts need to be determined.

Special attention must be given to organometallic or metal-based pesticides. The question of metal volatility during combustion must be investigated. Also, if the metal remains in the carbonate melt after pesticide destruction, the melt itself may be hazardous; e.g., combustion of an organic arsenic compound may yield sodium arsenate, a highly toxic material.

Ozone/UV Irradiation

Several pesticides have been subjected to combined ozone/UV irradiation at the research level, but no work at the pilot plant level has been attempted. Pesticide classes which have been proven susceptible to destruction and/or detoxification include: chlorinated hydrocarbons, organophosphorus compounds, and carbamates.

The process appears more applicable to the disposal of dilute pesticide solutions than to concentrated pesticide wastes or unwanted supplies. Environmental and economic cost impacts are lacking.

Sonocatalysis and Catalytic Ozonation

Initial work indicated detoxification of hazardous materials could be accomplished by a combination of ultrasonic energy, air (or ozone), and activated Raney-Nickel catalyst. No pesticides were tried although phenol and o-chloronitrobenzoic acid destruction was studied. The principle of sonocatalysis has been abandoned on purely economic grounds in favor of chemically catalyzed ozonation.

Sonocatalysis or catalytic ozonation appears to offer the same advantages (and disadvantages) as ozone/UV irradiation regarding potential disposal of pesticides. Ozonation technology remains underresearched and underutilized.

Wet Air Oxidation

This technique has wide potential application, but it remains underdeveloped and underutilized. The only published data refer to destruction of Amiben® and atrazine process wastes. More research and development work, including analytical evaluations, is advisable before a proper assessment can be made of the field disposal application of wet air oxidation for destroying and/or detoxifying pesticides. Economic cost estimates are available but not an environmental impact assessment.

Chemical Fixation

This process has proven valuable for disposing of many kinds of hazardous and/or toxic wastes, e.g., household refuse, acid mine sludge, pickling liquor, etc. However, no information exists pertaining to pesticides. Contact with Carborundum's Chemfix Division produced no additional information. This technology remains untried with pesticides.

Potential disposal applications include slightly soluble AI and finished formulations, e.g., clays, dusts, granules, etc. Water-soluble or solvent-based pesticides are probably not good candidates for disposal by chemical fixation. On the other hand, organometallic and inorganic pesticides which cannot be detoxified by any means may well be safely disposed in this manner although this has not been attempted.

Chemical fixation is at best an encapsulation process, and its application to pesticide disposal is incompletely evaluated.

Catalytic Dechlorination Utilizing Nickel Boride

This experimental batch process rapidly dechlorinates highly chlorinated pesticides at room temperature in the relatively short time of 30 min. The resulting product mixture contains many partially dechlorinated species; total dechlorination is generally not observed. The method has the advantage of not requiring complicated apparatus or hazardous reactants. Continued research and development is advisable. Sodium borohydride chemical costs are very high and may ultimately dominate all other considerations.

Reductive Degradation Utilizing Metallic Couples

This technique has advanced from the research scale to pilot plant demonstration scale (Sweeny, 1977 and Des Rosiers, 1977). Much experimental work needs to be verified on this scale, and operating parameters need to be more carefully defined. The process appears to be potentially most useful for very dilute wastewater containing halogenated pesticides.

Reductive degradation appears to be strongly dependent on the degree of halogenation of the individual pesticide. In our opinion, the technique has not been thoroughly investigated, nor has an adequate data base been generated for proper assessment. It is doubtful that the principle of operation would apply to pesticides other than highly chlorinated types since the driving force appears to be the formation of metallic chlorides. Nevertheless, the process deserves attention for possible application to select dilute pesticide solutions.

Synopsis

In the preceding reviews favorable comments were made on most of the candidate disposal methodologies, but one should recognize that the technical, environmental, and economic bases needed for a really definitive or critical assessment are quite inadequate. Almost without exception, each of these techniques for destruction/detoxification of pesticides and their formulations remains a research technique. Few are near the pilot plant scale, and the potential environmental impact of these techniques has not been adequately examined. Cost and other economic data have been tentatively given for only a few processes. As the processes advance beyond the research level to the pilot plant scale, we may expect engineering and economic cost estimates to be forthcoming. At the same time, much additional study must be given to the potential environmental impact if a given technology is utilized for the field disposal of pesticides and their finished formulations.

REFERENCES

Adams, J. W., N. J. Cunningham, J. C. Harris, P. L. Levins, J. L. Stauffer, and K. E. Thrun. Destroying Chemical Wastes in Commercial-Scale Incinerators, NTIS PB 267, 987, 1976.

Anon. 1971. Electrical World, 175, 157-158, 1971.

APS, Inc. Incineration of Wastes by Means of a Catalytic Salt Incinerator, undated.

Astrol™ Wet Oxidation Waste Treatment Systems, Astro Metallurgical Corporation, Wooster, Ohio. Bulletin Nos. WT-77-1 and WT-77-3, 1977.

Atomics International Division, Rockwell International. Molten Salt Process. Publication No. 523-K-18-1, 1975.

Bailin, L. J. Summary Report Detoxification of Navy Red Dye Composition by Microwave Plasma. Lockheed Palo Alto Research Laboratory. EPA Contract No. 68-03-2190, Environmental Protection Agency, SHWRD/MERL, Cincinnati, Ohio, Aug. 1977a.

Bailin, L. J. Microwave Plasma Detoxification Process for Hazardous Wastes, Phase II. Systems Application Evaluation. Lockheed Palo Alto Research Laboratory. Contract No. 68-03-2190. Environmental Protection Agency, SHWRD/MERL, Cincinnati, Ohio, Oct. 1977b.

Bailin, L. J. and B. L. Hertzler. Development of Microwave Plasma Detoxification Process for Hazardous Wastes. Phase I. Lockheed Missiles and Space Company, Inc., October 1976. EPA Contract No. 68-03-2190, Environmental Protection Agency, SHWRD/MERL, Cincinnati, Ohio, 1976.

Benson, W. R. Photolysis of Solid and Dissolved Dieldrin. J. Agr. Food Chem., 19:66-72, 1971.

Birk, J. R. U.S. Patent No. 3,710,737. Issued Jan. 16, 1973.

Calvert, J. G. and J. N. Pitts. Photochemistry. John Wiley and Sons, New York 1969.

Chemical Marketing Reporter. Nov. 7, 1977. p. 50.

Chen, J. W. and G. V. Smith. Feasibility Studies of Applications of Catalytic Oxidation in Wastewater. PB 208 348, 1971.

Chen, J. W. and G. V. Smith. Mechanisms of Catalytic and Sonocatalytic Oxidation in Wastewater Treatment. Presented at Symposium on Chemistry of Pollution Control. 172nd American Chemical Society National Meeting, San Francisco, California, 1976.

Chen, J. W., C. Hui, T. Keller, and G. Smith. Catalytic Ozonation in Aqueous Systems. Presented at the 68th Annual Meeting of the American Institute of Chemical Engineers, Los Angeles, California, 1975.

Christensen, H. E., and E. J. Fairchild. Registry of Toxic Effects of Chemical Substances, U.S. Department of Health, Education, and Welfare, 1976.

Conner, J. R. Ultimate Disposal of Liquid Wastes by Chemical Fixation. Program on Solid Waste Management for Industry. The University of Michigan, 1971.

Conner, J. R. Ultimate Disposal of Liquid Wastes by Chemical Fixation, Eng. Bull. Purdue University, Eng. Ext. Ser., 145(2), 906-922 (1974). Proceedings of the 29th Industrial Waste Conference, Purdue University, Lafayette, Indiana, 1974.

Conner, J. R. U.S. Patent No. 3,837,872. Sept. 24, 1974a. Chem. Abs., 82, 64104n, 1975.

Conner, J. R. Personal communication to R. Wilkinson, Nov. 10, 1977.

Crosby, D. G. Experimental Approaches to Pesticide Photodecomposition. Residue Rev., 25:1-12, 1969.

Crosby, D. G. Conquering the Monster--The Photochemical Destruction of Chlorodioxins. 174th National Meeting, American Chemical Society, Chicago, Illinois, 1977.

Crosby, D. G. and M. Y. Li. Herbicide Photodecomposition, in P. C. Kearney and D. D. Kaufman, ed. Degradation of Herbicides, Marcel Dekker, Inc., New York, 1969.

Crosby, D. G. and H. O. Tutass. Photodecomposition of 2,4-D. J. Agr. Food Chem., 14:596-599, 1966.

Crosby, D. G. and A. S. Wong. Environmental Degradation of 2,3,7,8-Tetrachlorodibenzo-p-dioxin (TCDD). Science, 195:1337-1338, 1977.

Dennis, W. H., Jr. Methods of Chemical Degradation of Pesticides and Herbicides - A Review. NTIS AD-752 123, 1972.

Dennis, W. H., Jr., and W. J. Cooper. Catalytic Dechlorination of Organochlorine Compounds. Part I. DDT. Bull. Environ. Contamin. and Toxicol, 14(6):738-744, 1975.

Dennis, W. H., Jr., and W. J. Cooper. Part II. Heptachlor and Chlordane, Bull. Environ. Contamin. and Toxicol. 16(4):425-430, 1976.

Dennis, W. H., Jr., and W. J. Cooper. Part III. Lindane. Bull. Environ. Contamin. and Toxicol., 18(1):57-59, 1977a.

Dennis, W. H., Jr., and W. J. Cooper. Nickel Boride Catalyzed Dechlorination of Several Organochlorine Pesticides. U.S. Army Medical Bioengineering Research and Development Laboratories Technical Report 7702 AD A04 118, 1977b.

Des Rosiers, P. Industrial Pollution Control Division Office of Research and Development, Environmental Protection Agency, Washington. Personal communication to R. Wilkinson, Nov. 7, 1977.

Flynn, B. L. Jr. Zimpro, Inc., Rothschild, Wisconsin. Personal communication to R. Wilkinson, Sept. 26, 1977.

Greenberg, J., APS, Inc., Pleasantville, New Jersey. Personal communication to R. Wilkinson, Sept. 14, 1977. '7.

Henderson, G. L. and D. G. Crosby. J. Agri. and Food Chem., 15:888, 1967.

Homberger, E., N. Neuner, F. Schenker, and H. K. Wipf. Workshop of 2,3,7,8-tetrachlorodibenzo-p-dioxin (TCDD), University of Milan, 1976.

Kennedy, D. C. Treatment of An Effluent From Manufacture of Chlorinated Pesticides With a Synthetic, Polymeric Adsorbent, Amberlite XAD-4, Environ. Sci. and Tech., 7(2):138-141, 1973.

Kennedy, M. V., B. J. Stojanovic, and F. L. Shuman, Jr. Chemical and Thermal Methods for Disposal of Pesticides, Residue Reviews, 29:89-104, 1969, F. A. Gunther, Ed., Springer-Verlag, New York, 1969.

Kennedy, M. V., B. J. Stojanovic, F. L. Shuman, Jr., Decontamination of Organophosphorus Insecticides, Air Force Armament Laboratory, Eglin AFB, Florida, Report No. AFATL-TR-70-92, 1970.

Lambden, A. E. and D. H. Sharp. Treatment of Effluents from the Manufacture of Weedkillers and Pesticides, Manufacturing Chemist, 31:198-201, 1970.

Lawless, E. W., T. L. Ferguson, and A. F. Meiners. Guidelines for the Disposal of Small Quantities of Unused Pesticides. EPA-670/2-75-057, 1975.

Marx, D. Velsicol Chemical Company, Memphis, Tennessee. Personal communication to R. Wilkinson, Sept. 21, 1977.

Mauk, C. E., H. W. Prengle, Jr., and J. E. Payne. Oxidation of Pesticides by Ozone and Ultraviolet Light, U.S. Army Mobility Equipment Research and Development Command, AD-A028 306/9ST, 1976.

Meier, E. P., M. C. Warner, W. H. Dennis, Jr., W. F. Randall, and T. A. Miller. Chemical Degradation of Military Standard Formulations of Organophosphate and Carbamate Pesticides. U.S. Army Medical Bioengineering Research and Development Laboratory, Fort Detrick, Frederick, Maryland, Technical Report 7611, AD A036051, 1976.

Mitchell, L. C. The effect of Ultraviolet Light on 141 Pesticide Chemicals. J. Assoc. Offic. Agr. Chem., 44:643-712, 1961.

Oberacker, D. A., and S. Lees. Microwave Plasma Detoxification of Hazardous and Toxic Materials. U.S. Environmental Protection Agency, Municipal Environmental Research Laboratory, Cincinnati, Ohio. USGPO 757-089/7029. Oct. 1977.

Ottinger, R. S., J. L. Blumenthal, D. F. Dal Porto, I. Gruber, M. J. Santy, and C. C. Shih. Recommended Methods of Reduction, Neutralization, Recovery, or Disposal of Hazardous Waste. Volume V. Pesticides and Cyanide Compounds. TRW Systems Group, Redondo Beach, California, PB-224 584, 1973.

Plimmer, J. R. The Photochemistry of Halogenated Herbicides. Residue Rev. 33: 47-74, 1970.

Plimmer, J. R. Principles of Photodecomposition of Pesticides. Degradation of Synthetic Organic Molecules in the Biosphere, San Francisco. Published by National Academy of Sciences, Washington, D.C., 1972.

Plimmer, J. R. Approaches to Decontamination or Disposal of Pesticides: Photodecomposition. 174th National Meeting American Chemical Society, Chicago, Illinois, 1977.

Plimmer, J. R., and B. E. Hummer, Photolysis of Amiben® and Its Methyl Ester. J. Agr. Food Chem., 17:83-85, 1969.

Plimmer, J. R. and P. C. Kearney. 3,4-Dichloroaniline Transformations in Soils and Light. 158th National Meeting American Chemical Society, New York, 1969.

Plimmer, J. R., P. C. Kearney, D. D. Kaufman, and F. S. Guardia. Amitrole Decomposition by Free Radical-Generating Systems and Soils. J. Agr. Food Chem., 15:996-999, 1967.

Rizzo, J. L. Removal of Toxic Chemicals by Filtration-Adsorption. Third Symposium on Hazardous Chemicals Handling and Disposal, Indianapolis, Indiana, 1972.

Rizzo, J. L. Calgon Corporation, Pittsburgh, Pennsylvania. Personal communication to R. Wilkinson, Sept. 20, 1977.

Rosen, J. D., M. Siewierski, and G. Winnett. FMN-Sensitized Photolysis of Chloroaniline, J. Agr. Food Chem., 18:494-496, 1970.

Rosen, J. D. Photodecomposition of Organic Pesticides. In S. J. Faust and J. V. Hunter, Ed. Organic Compounds in Aquatic Environments, Marcel Dekker, Inc., New York, 1971.

Roth, M. Project Officer, Picatinny Arsenl, Dover, New Jersey. Personal communication to R. Wilkinson, Nov. 9, 1977.

Sharp, D. H. The Disposal of Waste Materials in the Pesticide Industry. Disposal of Industrial Materials. Society of Chemical Industry, Sheffield University, London, England, 1956.

Shih, C. C. and D. F. Dal Porto. Handbook for Pesticide Disposal by Common Chemical Methods, TRW Systems, Inc., PB 252 864, 1975.

Smith, G. V. Chemistry Department, Southern Illinois University, Carbondale, Illinois. Personl communication to R. Wilkinson, Oct. 18, 1977.

Sweeny, K. H., and J. R. Fischer. Decomposition of Halogenated Organic Compounds Using Metallic Couples. U.S. Patent No. 3,737,384, June 5, 1973.

Sweeny, K. H. Reductive Degradation for the Treatment of Chlorinated Pesticide Containing Waters. Proceedings of the 1977 National Conference on Treatment and Disposal of Industrial Wastewaters and Residues, Houston, Texas, 1977. pp. 56-59.

Ugochukwu, E. N., and R. L. Wain. Photolysis of Ioxynil as a Factor in Its Herbicidal Action. Chemistry and Industry (London), 1:35, 1965.

Watkins, D. A. M. Implications of the Photochemical Decomposition of Pesticides. Chemistry and Industry (London), 5:185-190, 1974.

Wolverton, B. C., U.S. Patent No. 3,725,269, April 3, 1973.

Wolverton, B. C. Personal communication to M. Lance, Oct. 25, 1977.

Yosim, S. J., D. E. McKenzie, L. R. E. Grantham, J. R. Birk. U.S. Patent No. 3,845,190, Oct. 29, 1974.

Zeff, J. President, Westgate Research Corporation, West Los Angeles, California. Personal communication to R. Wilkinson, Nov. 9, 1977.

SECTION 7

LAND DISPOSAL METHODS

INTRODUCTION

Land disposal of pesticides is widely used. This method requires minimal waste handling and treatment, thereby reducing cost. However, current emphasis on potential environmental impact is stimulating more rigid guidelines for the handling and disposing of hazardous wastes. Requirements for more sophisticated landfill design, procedure, and monitoring are already being implemented in many areas.

For purposes of definition, land disposal shall include all methods by which waste is deposited in or on land. Since this analysis is centered on pesticides, the methods receiving the most attention will consist of procedures characteristic of hazardous waste elimination.

The discussion of land disposal methods is divided into five areas: (a) a description of methods; (b) current management of pesticide wastes in disposal sites; (c) an examination of related research; (d) environmental and economic cost impacts; and (e) future research needs.

METHODS OF LAND DISPOSAL

The five methods listed below outline the scope of land disposal:

* Burial
* Encapsulation
* Well Injection
* Infiltration/Evaporation Basins
* Soil Incorporation

Burial is the most widely used procedure for pesticide disposal in hazardous waste landfills (Ghassemi and Quinlivan, 1975). This manner of handling discarded pesticides involves covering the unwanted material with soil

(usually heavily laden with clay and/or organic matter) in low areas or in trenches used exclusively for such chemicals.

Encapsulation is the fixing of the pesticide in a sheath or container of concrete, asphalt, or a synthetic polymer prior to burial or storage. The encased chemical is isolated from its surrounding environment and preserved for possible future recovery.

There are two different types of well disposal: (a) deep-well injection entails pumping or draining wastes into underground cavities located beneath and completely apart from any usable groundwater; and (b) shallow dry wells and other man-made covered pits with perforated or permeable walls are employed as a dispersal system for dilute residues, especially mix and spray tank rinsings. Here, isolation from water supplies and cultivated land is essential since the avenue of disposal is dilution and biodegradation in the surface water and soil of the surrounding area.

Infiltration/evaporation basins are best suited for hot, dry climates. Solar evaporation concentrates toxic solids, which then must be periodically landfilled, while simultaneously making room for additional waste. In some cases, the system allows a portion of the liquid to "infiltrate" the subsoil.

Soil incorporation includes a variety of surface soil-disposal techniques: spraying, tilling, or flooding the soil with the discarded material.

With this variety of techniques, many types of pesticide wastes can be disposed. Solids may be buried and/or encapsulated. Liquids may be buried in sealed containers, deposited in disposal wells or infiltration/evaporation basins, or sprayed on isolated land.

CURRENT MANAGEMENT OF PESTICIDE WASTES IN DISPOSAL SITES

Hazardous waste management practices and procedures in the United States have improved in recent years through the creation of thoughtful and practical legislation. The laws, regulations, and guidelines for handling hazardous waste in California have been among the most comprehensive in the United States (California Department of Health, 1975).

The State of California has defined and set aside 13 acreages as Class 1 Hazardous Waste Disposal Sites. Class 1 sites are those which present no possibility of discharge of pollutant substances to usable waters. These sites are the major depositories for hazardous and liquid wastes and are certified by the Regional Water Quality Control Boards as suitable to receive Group 1 wastes. Group 1 wastes include agricultural wastes, pesticides, and pesticide containers as well as other hazardous materials. As such, Group 1 wastes must be considered potentially harmful to water quality and present occupational and health hazards.

At present only one site, Big Blue Hills, in Fresno County is specifically reserved for hazardous agricultural wastes and principally handles unrinsed pesticide containers. This site occupies 32 acres and is estimated to be operational from 1974 to 1995. Approximately 150 cu m/day (200 cu yards/day) of empty containers may be disposed daily although the site is open only 20 days/year (Ghassemi and Quinlivan, 1975; Storm and Margitan, 1975). Trench burial and compaction of empty pesticide containers to a depth of 6.1 m (20 ft) are the primary modes of disposal.

The Big Blue Hills site operation is guided by the following operational details:

* Hazardous wastes may be unloaded by transporting personnel under the supervision of site personnel.

* Security fences are maintained around the individual hazardous waste areas.

* Monitoring of the hazardous waste areas by visual inspection is performed.

* Preventive and safety procedures are observed for personnel.

* Formal emergency contingency plans exist.

* Operations manual and rules for personnel have been developed.

To date there has been only one incident involving the disposal of hazardous waste materials at this site. On April 24, 1975, an explosion occurred during the initial crushing and can compaction operation when a tractor dozer ran over six drums which contained acetone/methanol solvent mixture that was not identified on the manifest. The drums ruptured, and the liquid contents and vapors exploded and started a fire which caused extensive damage to the dozer. Fortunately, there were no serious injuries to the operator or other personnel.

California Assembly Bill No. 598 (1973) deals with hazardous waste control by:

* Defining various terms involving disposal or processing of hazardous waste and disposal sites.

* Establishing a hazardous waste technical advisory committee.

* Devising a list of hazardous and extremely hazardous wastes which have immediate or persistent toxic effects to man and wildlife and a resistance to natural degradation of detoxification processes.

* Setting standards and regulations for handling, processing, and disposal of hazardous and extremely hazardous wastes.

* Requiring that a manifest, or liquid-waste hauler record, be issued describing the nature of the waste to be transported from the place of origin to the disposal site.

* Establishing procedures for the evaluation and coordination of research and development regarding methods of hazardous waste handling and disposal.

* Setting disposal fees based on tonnage disposed at each site.

* Establishing enforcement by the State Department of Public Health or any local health officer or any local public officer as designated by the director.

Assembly Bill No. 598 has been in existence since July 1, 1973, and has been reasonably successful in managing the transportation and disposal of hazardous waste materials. The greatest problems in the application of the law center upon mislabeled and insufficiently identified hazardous waste.

Assembly Bill No. 598, Article 7, provides for the establishment of procedures for evaluation and coordination of research and development of methods of hazardous waste handling and disposal. Further, the Bill directs that appropriate studies relating to hazardous wastes may be conducted. According to the California Department of Health the following areas are currently under study:

* Air emissions from industrial disposal sites.

* Total input to California Class 1 disposal sites (a sampling and analytical study).

* Development of standardized waste sampling and analytical procedures.

* Development of waste compatibility guidelines.

* Compositions and environmental behavior of tannery wastes.

Several publications will be available in the near future (Stephens, 1977).

RESEARCH AND DEVELOPMENT

The following examination of current research and development is centered primarily on the question of whether or not the given waste is properly immobilized. Unlike incineration, biological, or physical-chemical treatment of

unwanted pesticides, land disposal does not directly address the question of detoxification. Natural processes are expected to destroy the pesticidal agent eventually, but the main intent of the method is isolation or controlled release into the environment with adequate dilution to prevent or lessen harmful effects.

Information representing two general areas will be presented: (a) research on the leaching of pesticides; and (b) soil incorporation studies.

Pesticide Leachate

Tracing pesticide leachate and monitoring the decline in groundwater and soil concentration yields useful data in assessing the fate of pesticides applied to land surfaces or buried. Four studies will be discussed and results will be summarized in cases where the work has been completed.

A study was undertaken by the Sanitary Engineering Research Laboratory (SERL) of the University of California, Berkeley, for the Army Medical Research and Development Command in 1974. The two-fold objectives of this project were to: (a) investigate the fate of pesticides in wastewater disposed of by irrigation on soil; and (b) determine the subsequent changes in mineral quality of the underlying groundwater. The pesticides used in the study were Diazinon®, malathion, carbaryl, and 2,4-D (Klein, 1974).

One series of experiments was carried out using large lysimeters containing 1.5 m (5 ft) depths of five soils--Yolo silty loam, Reiff very fine sandy loam, Oakley sand, gravelly river sand, and Delta peat. Other experiments were conducted on two field plots consisting of Yolo silty loam and Reiff very fine sandy loam, respectively, and of 37.2 m (400 ft) surface area. At both locations 0.1 mg/liter concentrations of the four biocides were added to sewage effluent irrigation water. The lysimeter studies included the following variables: distilled water slugs to simulate rainfall; addition of monovalent (Na) and divalent (Mg) cations; and elevated sewage loads. The field plots were subjected to normal outdoor precipitation and similar cation slugs. On both sites, movement of the test chemicals was carefully monitored.

After 43 weeks of experimentation, no significant accumulation or translocation problems were observed in the lysimeter studies. However, one unexplained inconsistency appeared in the form of 2,4-D movement through the Yolo soil. The nature of the soil and its moisture content seemed to have more influence on the subsoil water quality than did the applied wastewater.

The period of testing at the two field plots was 41 weeks, and results there agree with the lysimeter findings. The researchers did note, however, sizable pesticide movement under two extreme circumstances, one being high fluid levels combined with removal of plot vegetation, and the other being

extreme drying and cracking in the soil profile. The capacity of the different soils to accomplish biological degradation was given credit for much of the promise shown by this disposal technique.

A second study was performed by the Agronomy Department at Oklahoma State University for the Environmental Protection Agency, NERC-Corvallis, Oregon, in 1974. The goal was to assess the use of soil parameters in describing movement of pesticide leachate by a mathematical model (Davidson, 1975).

Experimental results from laboratory and field studies on the movement of the herbicide, fluometuron, through soil were used to test the validity of solutions of a differential equation for solute transport. Laboratory portions of this investigation utilized calcium-saturated Norge loam soil and Cobb fine sandy loam as the soil media. The field portion was conducted on Teller sandy loam near Perkins, Oklahoma. The data demonstrated the feasibility of predicting the movement of pesticide leachate by a mathematical model.

The adsorption and desorption isotherms studied were too complex mathematically to be represented by a single-valued function. Some of the factors responsible for complicating the pesticide mobility analysis were soil-pore geometry and size, variance in the soil-water ratio, overlap of several adsorption and desorption cycles in the same soil profile, and the influence of biological degradation. Experimental results yielded maximum herbicide concentrations in the migrating water solution lower than that predicted mathematically, suggesting that a portion of the fluometuron was irreversibly adsorbed to soil.

Kinetic adsorption-desorption models for herbicide mobility were found to be inadequate at high average pore-water velocities. These models were more useful at low average pore-water velocities, but kinetic rate coefficients were difficult to measure. Losses of fluometuron through the soil column were greatest when the chemical was applied to wet soils.

The third study is a more recent effort by Davidson et al. (1978) which examines the equilibrium adsorption isotherms of 2,4-D, atrazine, terbacil, and methyl parathion in four soils. (The scope of this research is not limited to pesticide leachate studies; but, for the sake of continuity, the remainder of the current work that has been done by Davidson and his co-workers will be described at this time.) The work is of particular interest because the level of applied pesticide ranges from 10 to 20,000 $\mu g/g$ of soil. The upper end of this range does simulate the high concentrations one would expect as a result of land disposal activities.

The research was carried out in laboratory apparatus in the Soil Science Department of the University of Florida, Gainesville. Column displacement experiments were done in 15-cm glass cylinders with a cross-sectional area of 45 cm^2. Adsorption experiments were performed in agitated, screw-cap test tubes

over 48-hr test periods. Both procedures employed a ^{14}C tracer which allowed the quantification of pesticide movement or adsorption. The soils utilized were Webster silty clay loam from Iowa, Cecil sandy loam from Georgia, Glendale sandy clay loam from New Mexico and Eustis fine sand from Florida.

Microbial metabolic activity and pesticide degradation were also noted in separate procedures. Microorganisms that were isolated from incubated (28°C) soil-pesticide cultures were identified and enumerated using a dilution plate count method. Metabolic activity of soil microbes was measured by quantifying CO_2 production from aerated samples (aeration gas contained no CO_2). Pesticide degradation rates were determined by measuring the evolution of ^{14}C to CO_2 from ^{14}C-labeled pesticides in soil-pesticide cultures during an 80-day period. Duplicate microbial activity and pesticide degradation experiments were run using both technical grade and formulated chemicals. A fifth soil, Terra Ceia muck from Florida, was also used in portions of these soil respiration experiments.

Results indicate that pesticide movement through water-saturated soil may be represented by the Freundlich equation ($S=KC^N$). K and N are constants obtained for a given soil-pesticide combination using a least-squares fit, S is the microgram weight of pesticide adsorbed per gram of soil and C is the microgram weight of pesticide per milliliter of influent solution. Adsorption sites were not saturated at any concentration tested, even when pesticide-saturated solutions were employed. As pesticide concentration in the various experimental solutions was increased, soil adsorption also increased, but not at as great a rate. Higher concentrations of pesticide allowed greater pesticide mobility in all cases.

The results of the microbial activity study did not present an entirely consistent pattern. Variations due to different pesticides, soils and pesticide-soil interactions were apparent. Webster and Terra Ceia soils both provided an adequate substrate for the degradation of high level pesticide applications, especially 2,4-D applications. Cecil soil, on the other hand, proved to be poorly suited to the task of pesticide degradation.

In some cases, microbial metabolic activity was stimulated by high level pesticide application. However, it was found that accelerated CO_2 production was <u>not</u> necessarily indicative of pesticide degradation. Radioisotope tracing showed that an initial increase in CO_2 evolution by Webster soil after 2,4-D application was the result of the degradation of formulation chemicals, impurities or soil organic matter, not AI. A second increase in respiration following a brief lag period was the result of 2,4-D degradation. This double peak pattern of CO_2 evolution was also characteristic of 2,4-D breakdown in Terra Ceia soil and trifluralin breakdown in Webster soil. A more detailed discussion of this phenomenon is presented in Ou et al. (1978).

The following two inferences for land disposal methodology are suggested by this research: (a) when pesticide application rates at a land disposal site exceed normal usage by a large margin, pesticide soil mobility beyond that normally seen should be expected; (b) for some combinations of soil and pesticide, soil incorporation may be a useful disposal technique--possibly allowing pesticide applications of 20,000 μg/g of soil.

The fourth study was conducted by Matrecon, Inc., Oakland, California, for the Environmental Protection Agency, IERL/Cincinnati, during 1976 and 1977. The objectives were to test and evaluate various types of liners over a 1.5- and 3-year period. Variables included longevity, effectiveness, and cost (Haxo, 1976).

The bulk of the testing was carried out at the Richmond Field Station of the University of California, Berkeley. Five soil or admix type materials and eight polymeric membrane materials were selected for the study on the basis of their potential impermeability to hazardous chemicals. Soil and admix materials included asphalt emulsion and nonwoven fabric, compacted native fine grain soil, hydraulic asphalt concrete, modified bentonite and sand, and sealed soil cement. Polymeric membranes included butyl rubber, chlorinated polyethylene, reinforced chlorosulfonated polyethylene, elasticized polyolefin, ethylene propylene rubber, reinforced polychloroprene, polyester, and polyvinyl chloride.

The six classes of waste to which the liners were exposed were acidic sludge, alkaline sludge, cyclic hydrocarbon sludge, lead wastes from gasoline tanks, oil refinery tank bottom waste, and pesticide sludge. An exact identification of the pesticide sludge was not available for public disclosure at this time. However, it was a commercial herbicide waste stream commonly handled by a local industrial disposal firm (Haxo, 1977).

Each test cell contained 28.4 liters (1 ft^3) of waste, and the respective liner materials were incorporated into the bases of the individual cells.

As demonstrated by these three research projects, the question of pesticide mobility via leachate migration commands much attention once the given chemical is deposited. For this reason, land burial is most suitable for solid or semisolid wastes. Water solubility of the disposed material is of primary importance. Fear of groundwater contamination and subsequent ingestion of toxic chemicals by humans and livestock appears warranted in light of mishaps where this has occurred (EPA, 1975a, 1975b).

The factors capable of preventing pesticide leaching may be grouped in three categories: soil adsorption; physical barriers; and biological degradation. Frequently, all three of these are included in the design and operation of land disposal facilities.

Soil adsorption of migrating substances is dependent on heavy soils, particularly those containing high percentages of clay and/or organic matter. Soils consisting primarily of sand will adsorb very little leachate. One notable example of sandy soil response to pesticide application can be seen in the study done by Young et al. (1975) on the Eglin Air Force Base Reservation, Florida, where large quantities of pesticide were applied to a small area in the process of testing spray equipment. This study will be examined later in the soil incorporation discussion.

Containment of substances by physical barriers may be accomplished by natural geology or by the addition of man-made systems. In some locales, especially upland desert areas, surface soil is underlain by rock basins that effectively seal off any groundwater escape. In addition, yearly precipitation is less than the capability for evaporation and transpiration. Such a site was utilized in a study by Goulding (1973) at Oregon State University and was found to be ideal for land disposal purposes.

Most of the agricultural and industrial sources of pesticide wastes are not located in sections of the United States where the previously stated desirable geological and climatic conditions occur (Lindsey et al., 1976). As a result, containment of pesticides may involve the introduction of artificial barriers to fluid movement. Because clay is an ideal natural liner for a landfill, this type of soil may be hauled in and graded to the desired depth, typically 46 cm (18 in.) (Fields and Lindsey, 1975). One commercial installation, a leader in the field of pesticide and other hazardous waste disposal, claims a clay soil depth approaching 24 m (80 ft) beneath its Illinois landfill (Roeser, 1977). As evidenced by the third abstract cited (Haxo, 1976), many other liners are available and under study.

A more extreme type of containment utilized in some areas involves the use of underground concrete receptacles which are closed after filling to a desired depth and sealed with the intent of indefinite storage (Ghassemi and Quinlivan, 1975). Similar use of mine openings, particularly old salt mines, has been discussed in the literature (Atkins, 1972; Fields and Lindsey, 1975; Wiles, 1976).

Encapsulation of waste pesticides in water-insoluble masses of concrete, molten asphalt, polyurethane, or polyethylene has also been explored as a possible means of preventing chemical migration (Fields and Lindsey, 1975; Lubowitz and Wiles, 1976).

Biological detoxification is capable of reducing the toxicity of many compounds in substrates if the proper microorganisms and nutrients are present. A thorough discussion of microbial degradation of pesticides and other hazardous materials is given in Section 5 of this report.

Soil Incorporation

The breakdown of pesticides in soil is partially the result of the physical and chemical interactions of the pesticides with the surrounding particles. The physical portion of this interaction involves adsorption-desorption, photolysis, and transport to sites where chemical degradation may occur. Oxidation, reduction, hydrolysis, and polymerization of pesticide compounds have all been proven or postulated in soil incorporation studies (Leonard et al., 1976). Microbial activity also plays an important role in pesticide breakdown when circumstances favoring the growth of the necessary organisms is present.

There are many instances of pesticide soil incorporation in the research literature. However, these studies generally address the problems associated with the normal use of pesticides. There are no examples of research on soil incorporation of pesticides as a full-scale disposal technique. Three studies, whose findings have implications for land disposal, will now be discussed.

The first study is the single most authoritative reference on biodegradation of pesticides in soil (Sanborn et al., 1977). This report examines the pertinent literature and assesses the potential for soil disposal of 45 prominent pesticides in "tonnage" quantities.

Based on persistence, toxicity, and mobility, 21 of the chemicals under study were found to be unsuitable for land disposal. These include:

Aldrin	Endosulfan	Monuron
Atrazine	Endrin	Paraquat
Chlordane	Heptachlor	PCP
DDT	Kepone®	Picloram
Dicofol	Linuron	Toxaphene
Dieldrin	Methyl bromide	
Diquat	Mirex	
Diuron	Monolinuron	

Conversely, 10 were found to be susceptible to natural detoxification and, hence, suitable for land disposal:

Bux®	EPTC
Carbaryl	Malathion
Captan	Methoxychlor
Chloramben	Nitralin
2,4-D	Trifluralin

Finally, Sanborn and co-workers concluded that 14 of the substances under scrutiny cannot be definitely categorized given the available data:

Bromacil	Maneb
CDAA	Methyl parathion
Diazinon®	Nabam
Disulfoton	Parathion
Dicamba	Phorate
Dodine	2,4,5-T
Guthion®	Zineb

Sanborn and co-workers also noted that most of the available data describe well dispersed, low level applications of pesticides to soil. In bulk disposal operations, long periods of persistence of the unwanted chemical or its degradation products would be expected. For this reason, programs to monitor pesticide decomposition and ensure environmental safety should accompany any large-scale soil disposal of all pesticides.

A second study examined one of the least documented areas in pesticide biodegradation literature, the effect of high volume pesticide application on a land surface. These data compiled at Eglin Air Force Base, Florida, provide some new and important information (Young, 1975).

The test site was a 2.6-sq km (1-sq mile) plot on which Air Force spray equipment was tested from 1962 to 1970. During that 8-year period, 157,000 kg (346,117 lb) of military herbicides were deposited on the grid. The AI included 2,4-D, 2,4,5-T (some associated TCDD), picloram, and cacodylic acid. The soil of the test site consisted of > 90% sand, < 6% clay, < 5% silt, and < 0.5% organic matter. The water table varied from 1.8 to 3.0 m (6 to 10 ft). Five creeks drain the spray grid and empty into Choctawhatchee Bay < 5 km (3 miles) away. Several small ponds are also present. The average yearly precipitation, measured from 1964 to 1969, was 1.54 m (60.4 in.).

The experimental approach involved observation of variations in the population density and species diversity of native wildlife, as well as analysis of chemical residues in animal tissues and soil cores. This procedure allowed the researchers to quantify ecological changes taking place in the test area after the cessation of spraying. Additional qualitative judgments in regard to the health of specimens collected and observed were also included.

Young recorded a return of plant cover and an increase in species diversity after the applications were concluded. No toxic or teratogenic effects were found among the organisms present on or near the grid. However, residues of TCDD (or a chemical appearing very similar to TCDD via combined gas chromatography/mass spectrometry) were found at levels up to 540 ppt in liver and fat tissue from mice. This contradiction remains unexplained.

Assays on oysters at the mouths of the creeks draining the spray area yielded levels of 1.45 ppm arsenic. Because this finding was not substantially different from levels found in oysters from other parts of Chactawatchee Bay (1.32 ppm), Young judged this measurement to be insignificant. The general conclusion reached was that no permanent harm was done to the spray area during the equipment testing.

The physical characteristics of the spray grid present a possibility of leachate migration and volatile losses. The lack of clay and organic matter in the soil profile--combined with the high yearly rainfall, high volume surface runoff, and shallow water table--suggests a clear pathway to the coastline for any water-soluble residues. In addition, the aerial applications with no effort to ensure penetration into the sandy soil leave open the possibility of volatile losses. For these reasons, it would be unwise to attempt comparisons between this study and soil incorporation of unwanted pesticides on a land disposal site selected for maximum containment of deposited material and managed to allow minimum losses of the waste.

A third study consisted of a series of laboratory-scale experiments (Cole and Metcalf, 1977). Seven pesticides were introduced to model ecosystems to enable researchers to follow the transfer of radioactively tagged residues to land, air, and water. The pesticides were aldrin, dieldrin, pentachloronitrobenzene, pentachlorophenol, parathion, methyl parathion, and captan. The ecosystems consisted of 19-liter, wide-mouth glass carboys. Each contained 400 g of vermiculite or 3,000 g of Drummer silty clay loam soil (9.5% sand, 60.2% silt, 30.3% clay, and 7.1% organic matter). Measured amounts of water were added and maintained to support the germination and growth of 50 corn seeds per system.

The pesticides were applied in a manner designed to simulate normal use. Five milligrams were injected beneath the soil beside each seed as a preemergent application, and the same amount was sprayed on the foliage on the 10th day as a postemergent application. These concentrations were calculated to represent field levels of 45.4 kg/ha (1 lb/acre).

Also on the 10th day, a community of invertebrate organisms was added. Five days later, a prairie vole (*Microtus ochrogaster*) was added to serve as the top trophic level in the terrestrial ecosystem.

On the 20th day, all remaining plant and animal debris was removed and the carboys were flooded with water. A microaquatic community was then added in much the same way that the terrestrial organisms had been added. Again, the experimental design encouraged any food chain accumulation to show itself in a top level consumer--three small fish (*Gambusia affinis*).

An examination of the radioactivity present in the ecosystems yielded the following conclusions:

* Aldrin and dieldrin were the most persistent chemicals in the soil.

* At the termination of the terrestrial phase of the experiment, the majority of the biocides were found in the soil and/or the air--not in the animals.

* The presence of vegetation and organic material in soil encouraged soil adsorption of pesticides.

* At the termination of the aquatic phase of the experiment, a much larger quantity of all of the applied chemicals was found in the air than was found in the water.

* The aquatic organisms accumulated the biocides from the water to a much greater degree than did the terrestrial creatures from the air.

* No bioaccumulation of chemicals at the top of either food chain was observed. (The short duration of the experiment combined with the simplicity of these ecosystems places limitations on this conclusion.)

Admittedly, this experiment is designed to demonstrate chemical mobility under normal use, not under the high loading common in land disposal. Another problem encountered in an analysis of these data is the unknown percentage of nontoxic breakdown products included in the radioactivity measurements. However, the results do raise several questions for those interested in land disposal methods:

* What percentages of pesticides are translocated from the land disposal site to air, soil, and water under normal burial procedures?

  The work by Cole and Metcalf (1977) suggests that for their test pesticides, soil and air would contain the highest levels. The individual chemical's characteristics, the nature of the receiving soil, and the depth of cover would determine the exact proportion that would be found in each. Surface water would be expected to contain only a fraction of the total.

* Is the possibility of air pollution from pesticides adequately met in landfill design?

  Even though most current land disposal evaluations are devoted to leachate containment rather than to volatile losses, the research under discussion here implies that the latter may account for the fate of a significant share of deposited pesticides. Again, this comment must be qualified with consideration of the individual pesticide's characteristics, the nature of the receiving soil, and the depth of cover employed.

POTENTIAL IMPACTS

On the basis of available information, land disposal will be discussed in terms of potential environmental and economic cost impacts.

Potential Environmental Impacts

Land disposal of pesticides requires safeguards to prevent injury to soil, water and air, as well as direct harm to various forms of life. The lack of treatment, which is characteristic of land disposal, presents the possibility of releasing the given AI into the environment. Because the environmental problems associated with the different types of land disposal are very similar, the discussion of hazards will refer to specific methods only where such a reference is appropriate.

Contamination of soil is to be expected in the immediate vicinity of pesticide land disposal activities. Consideration of the problems presented by accidental spills and leaky or broken containers requires the recognition of this fact. Site selection must involve a judgment on the present and future potential use of the land in question. It is essential that the property be isolated from populated areas, tillable land, livestock, and both surface water and groundwater.

Land adjacent to land disposal operations may also be subjected to an accumulation of pesticide residues. Care must be exercised in the use of land parallel to the roadways traveled by waste haulers due to the possibility of accidents. Problems can also occur if seepage of leachate appears at lower elevations from a disposal site. Discarded dry formulations may become windborne pollutants. Because of similar hazards, spraying unused pesticides or tank rinsing solutions on the soil surface should take place only after careful consideration of the wind speed and direction. These possible environmental problems may be minimized if adequate caution is exercised by the disposal site personnel and if there is a generous buffer zone surrounding the principal areas of disposal activity.

Both surface water and groundwater are vulnerable to contamination from nearby pesticide land disposal. Leaching of the deposited chemicals is the most significant hazard. In the design of landfills and infiltration/evaporation basins, impermeable liners offer the most promising solution to this problem (Fields and Lindsey, 1975). Tiling a burial site may provide another alternative. With such a system, regular sampling of the water percolating through the subsoil is possible. If necessary, the leachate may be retained for treatment prior to discharge. The possibility of water contamination is also very dependent on the location and surface drainage of the operation. The site should be located above the 100-year floodplain and situated so that natural precipitation and runoff will not wash wastes into nearby waterways.

Land disposal procedures may also contaminate the air. The evaporation of waste compounds and their potential photolytic and biochemical degradation products is an integral part of soil incorporation and infiltration/evaporation disposal. For this reason, the chemical nature of a waste must be considered before implementing these methods. Formulations known to be volatile or to form toxic gases should be handled in some other way.

Other land disposal methods should allow only minimal air contact with the waste to prevent volatile losses. Burial should proceed rapidly with adequate cover to ensure containment. Spills should be covered immediately. Toxic powders may be dispersed in the air during the unloading of dry formulations at a landfill site. Settling dust with applications of water, combined with caution on the part of drivers and employees while operating vehicles in the area designated for wettable powders, will control this problem.

If pesticide wastes are not properly contained during land disposal procedures, adverse consequences are likely for living organisms. The potential avenues for harm include direct bodily contact, ingestion, inhalation, or the destruction of normal habitat and food sources. The misplaced compounds may harm nontarget species, including man, or initiate a series of deleterious alterations in a local ecosystem. Many incidents of accidental pesticide poisoning of humans and livestock appear in the literature (Environmental Protection Agency, 1975a, 1975b). Reduction of nontarget earthworms and the host of other invertebrates which inhabit soil is another example of damage. These seemingly insignificant creatures populate normal soil in great numbers and serve to transform vegetation litter into humus. The ultimate effect of their decline is a loss in natural fertility and an increased demand for fertilizer in agricultural areas. Similarly, decreases in natural predator populations due to incidental poisoning will also increase the dependence of cultivated soils on chemicals, in this case additional pesticides (Edwards and Thompson, 1973).

Potential Economic Impacts

Of the various pesticide land disposal methods under discussion, reasonably complete economic data can be found in the literature only for burial in a hazardous waste landfill. User gate fees at the California Class 1 sites range from $3.85 to $9.35/MT ($3.50 to $8.50/ton). Charges per volume at the same locations ranged from $2.30 to $13.75/cu m ($1.75 to $10.50/cu yard) (Ghassemi and Quinlivan, 1975). Miscellaneous additional fees are also charged in the form of annual registration fees, specific permits, and special handling fees.

The Big Blue Hills disposal site located near Coalinga, California, in Fresno County required an initial investment of $12,711 in 1973 including:

Land	$3,176
Trench excavation	3,735
Fencing	2,100
Safety equipment	850
Access road, signs, incidentals	2,850
Total	$12,711

(Ghassemi and Quinlivan, 1975)

Operating cost for fiscal year 1974 to 1975 was approximately $16/MT ($14/ton) (Ghassemi and Quinlivan, 1975).

This site was judged to be well suited to serve as an example for this discussion. The waste handled is almost entirely composed of pesticides and their containers. The quantity of waste processed makes the Big Blue Hills operation the biggest pesticide disposal facility in California, handling 380 MT (425 tons)--57% of the total pesticide waste recorded via the California Waste Hauler manifest system during the first half of 1976 (California Department of Health, 1975).

FUTURE RESEARCH NEEDS

Land disposal procedures have been widely employed because they are economical and appear uncomplicated. However, they do not actively cause the detoxification of the unwanted chemical. This fact presents the possibility of adverse environmental impacts. The severity of these potential hazards remains difficult to assess because of sizable data gaps. The majority of

pesticides have not been examined to determine their fate via land disposal. Leaching and volatile losses from unlined disposal sites or evaporation/ infiltration ponds cannot be predicted with any certainty. The capacity of various soils to adsorb, retain, and degrade pesticides has not been adequately quantified.

The establishment of new disposal sites for hazardous chemicals is becoming increasingly difficult because of adverse public opinion and the general increase in land values. The selection of land that is geologically suitanle, the segregation of pesticide wastes from other refuse, and the need to monitor the disposal site, all require careful attention. The possibility of future legislation increasing the requirements for environmental safeguards or prohibiting land disposal of some compounds in favor of physical-chemical treatment remains open.

After reviewing the literature, there are four areas which call for additional comment.

* First, there is an inadequate data base available to predict what happens when a pesticide is land disposed. The rate of breakdown and the formation of water-soluble or volatile breakdown products are often uncertain. Further work is needed to provide a more scientific basis to land disposal of pesticides.

* Second, the use of sample wells in and around land disposal operations should be expanded. Available information suggests that movement of contaminants in groundwater may be very slow. In instances where the detection of potential problems is too slow, large amounts of underground water as well as the health of nearby persons and livestock may be needlessly endangered.

* Third, current research on impermeable liners for land disposal facilities should be continued, and the installation of appropriate liners at new sites should be encouraged.

* Fourth, volatile losses from land disposal operations remain largely undetermined. Tests should be undertaken to establish the hazards related to vapors and gases escaping from land disposal facilities.

REFERENCES

Atkins, P. R. The Pesticide Manufacturing Industry - Current Waste Treatment and Disposal Practices. PB 211 129, 1972.

California Department of Health, Berkeley. Hazardous Waste Management: Law, Regulations, and Guidelines for the Handling of Hazardous Waste, 1975.

California Assembly Bill No. 598. Hazardous Waste Control, State of California Statutes of 1973, 1:2387-2393.

Cole, L. K. and R. L. Metcalf. Distribution of Pesticides and Their Derivatives in the Soil, Air, Water, and Biota of Physical Model Ecosystems. Presented at the Annual Air Pollution Control Association Conference, 1977.

Davidson, J. M., G. H. Brusewitz, D. R. Baker, and A. L. Wood. Use of Soil Parameters for Describing Pesticide Movement Through Soils. Project No. R-800364. National Environmental Research Center, Office of Research and Development. EPA-660/2-75-009, 1975.

Davidson, J. M., L. T.Ou, and P. S. C. Rao. Adsorption, Movement, and Biological Degradation of High Concentrations of Selected Pesticides in Soils. Presented at the 4th Annual Research Symposium on Land Disposal of Hazardous Wastes, San Antonio, Texas, March 6 to 8, 1978. To be published in proceedings of same.

Edwards, C. A. and A. R. Thompson. Pesticides and the Soil Fauna. Residue Reviews, 45:1-79, 1973.

EPA. Hazardous Waste Disposal Damage Reports. Publication No. SW-151, 1975a.

EPA. Hazardous Waste Disposal Damage Reports. Publication No. SW-151.2, 1975b.

Fields, T., Jr. and A. W. Lindsey. Landfill Disposal of Hazardous Wastes - A Review of Literature and Known Approaches. EPA Publication No. SW-165, 1975.

Ghassemi, M. and S. Quinlivan. A Study of Selected Landfills Designed As Pesticide Disposal Sites. EPA Publication No. SW-114c, 1975.

Goulding, R. L. Waste Pesticide Management - Final Narrative Report. EPA Demonstration Grant 5-G06-EC-00222, 1973.

Haxo, H. E., Jr. Evaluation of Liners When Exposed to Hazardous Wastes. Residual Management by Land Disposal. In: Proceedings of the Hazardous Waste Research Symposium, EPA Report No. 600/9-76-015, 1976.

Haxo, H. E., Jr. Matrecon, Inc., Oakland, California. Personal communication to F. Hopkins, Aug. 25, 1977.

Klein, S. A., D. Jenkins, and J. W. Biggar. An Evaluation of the Accumulation, Translocation, and Degradation of Pesticides at Land Wastewater Disposal Sites. Prepared for the Army Medical Research and Development Command, AD/A-006-551, 1974.

Leonard, R. A., G. W. Bailey, R. R. Swank. Transport, Detoxification, Fate, and Effects of Pesticides in Soil and Water Environments. Land Application of Waste Materials. Soil Conservation Society of America, Ankeny, Iowa, 1976. pp. 48-78.

Lindsey, A. W., D. Farb, and W. Sanjour. OSWMP Chemical Waste Landfill and Related Projects. Residual Management by Land Disposal - Proceedings of the Hazardous Waste Research Symposium. EPA Report No. 600/9-76-015, 1976.

Lubowitz, H. R. and C. C. Wiles. A Polymeric Cementing and Encapsulating Process for Managing Hazardous Waste. Residual Management by Land Disposal - Proceedings of the Hazardous Waste Research Symposium. EPA Report No. 600/9-76-015, 1976.

Ou, L. T., D. F. Rothwell, W. B. Wheeler, and J. M. Davidson. The Effect of High 2,4-D Concentrations on Degradation and Carbon Dioxide Evolution in Soils. J. of Environ. Qual., 7(2):241-246, 1978.

Roeser, P. Earthline Division SCA Services, Wilsonville, Illinois. Personal communication to F. Hopkins, Aug. 1, 1977.

Sanborn, J. R., B. M. Francis, R. L. Metcalf. The Degradation of Selected Pesticides in Soil: A Review of the Published Literature. Prepared by the Illinois Natural History Survey for the Municipal Environmental Research Laboratory Office of Research and Development. EPA-600/9-77-022, 1977.

Stephens, R. D. California Department of Health, Vector and Waste Management Section. Personal communication to R. Wilkinson, Sept. 26, 1977.

Storm, D. L. and E. Margitan. Survey of Operational Procedures at Class 1 Hazardous Waste Disposal Sites in California. California Vector Views, 22(2):9-18, 1975.

Wiles, C. C. An Evaluation of Storing Nonradioactive Hazardous Waste in Mine Openings. Residual Management by Land Disposal - Proceedings of the Hazardous Waste Research Symposium. EPA Report No. 600/9-76-015, 1976.

Young, A. L., C. E. Thalken, and W. E. Ward. Studies of the Ecological Impact of Repetitive Aerial Applications of Herbicides on the Ecosystem of Test Area C-52A, Eglin AFB, Florida. Prepared for Air Force Armament Laboratory, Report No. AFATL-TR-75-142, 1975.

SECTION 8

ALTERNATIVES TO PESTICIDE DISPOSAL

INTRODUCTION

This section discusses various alternatives to pesticide disposal/detoxification with special emphasis on two chemical conversion methods: chlorolysis and hydrodechlorination. Technical details of each process with potential environmental and economic cost impacts are given. The section closes with a discussion of future research needs.

ALTERNATIVE METHODS

Alternatives to pesticide disposal/detoxification procedures include: normal use, return to manufacturer or supplier, export, reprocessing to recover original material, and conversion to other chemical forms having economic value. The first three alternatives lie outside the scope of work. The two remaining alternatives are potentially useful and consistent with resource recovery goals.

By reprocessing we mean physical treatment to recover the economic value of AI(s) or admix materials (e.g., solvents, diluents, emulsifiers, etc.). Such physical treatments may include: solvent or aqueous extraction, simple or fractional distillation at atmospheric pressure or under partial vacuum, drying or dewatering, etc. By conversion, we mean application of chemical treatment to recover economic value of the pesticide by producing other chemicals for sale or use.

Reprocessing methods are of potential utility in handling quantities of unwanted, cancelled, or otherwise restricted pesticide AI's and finished formulations. Reprocessing is occasionally done by the pesticide industry during normal manufacturing and formulating operations (e.g., reworking to meet specifications), but it has been seldom applied to finished formulations already released to the marketing and distribution systems. Economic and legal incentives are lacking. Further, reprocessing has no potential as an alternate to field disposal of pesticide products by the layperson. It is potentially more useful to the pesticide industry.

Conversion methods by chemical treatment may be applied at either level of the marketing distribution system but have not been utilized. Little use has been made of either reprocessing or conversion technology to date as alternatives to disposal/detoxification procedures.

SELECTED CHEMICAL CONVERSION METHODS

Two selected conversion methods for transforming unwanted pesticides into useful chemicals are chlorolysis and catalytic hydrodechlorination. These are discussed below.

Chlorolysis

Exhaustive chlorination as a method of disposing of pesticides and other chemical wastes has been suggested at least since 1974. (Anon. 1974). Two U.S. patents describing basic improvements in chlorination appeared in 1972 Krekeler et al., 1972a; 1972b). A recent study for the EPA--Industrial Environmental Research Laboratory, Research Triangle Park has assessed the potential usefulness and economics of chlorolysis to destroy pesticides and other chlorohydrocarbon wastes (Shiver, 1976). A follow-up report, including process details, engineering cost estimates, and marketing information is currently (May 1978) being printed and the Summary portion of the report will be available through National Technical Information Service (NTIS) (Des Rosiers, 1978).

Exhaustive chlorination can be performed over a range of pressures and temperatures, depending on the type of feed stock (aliphatic or aromatic). According to a new process developed by Farbwerke Hoechst Ag, Frankfurt/Main, Germany, hydrocarbons and their oxygenated or chlorinated derivatives are completely converted to carbon tetrachloride, phosgene, and hydrogen chloride at pressures up to 24 MPa (240 atm) and temperatures up to 620°C (1148°F) (Krekeler et al. 1975). Figure 30 presents a schematic flow diagram of the Hoechst AG chlorolysis process.

Three typical reactions are possible depending on the type of hydrocarbon involved:

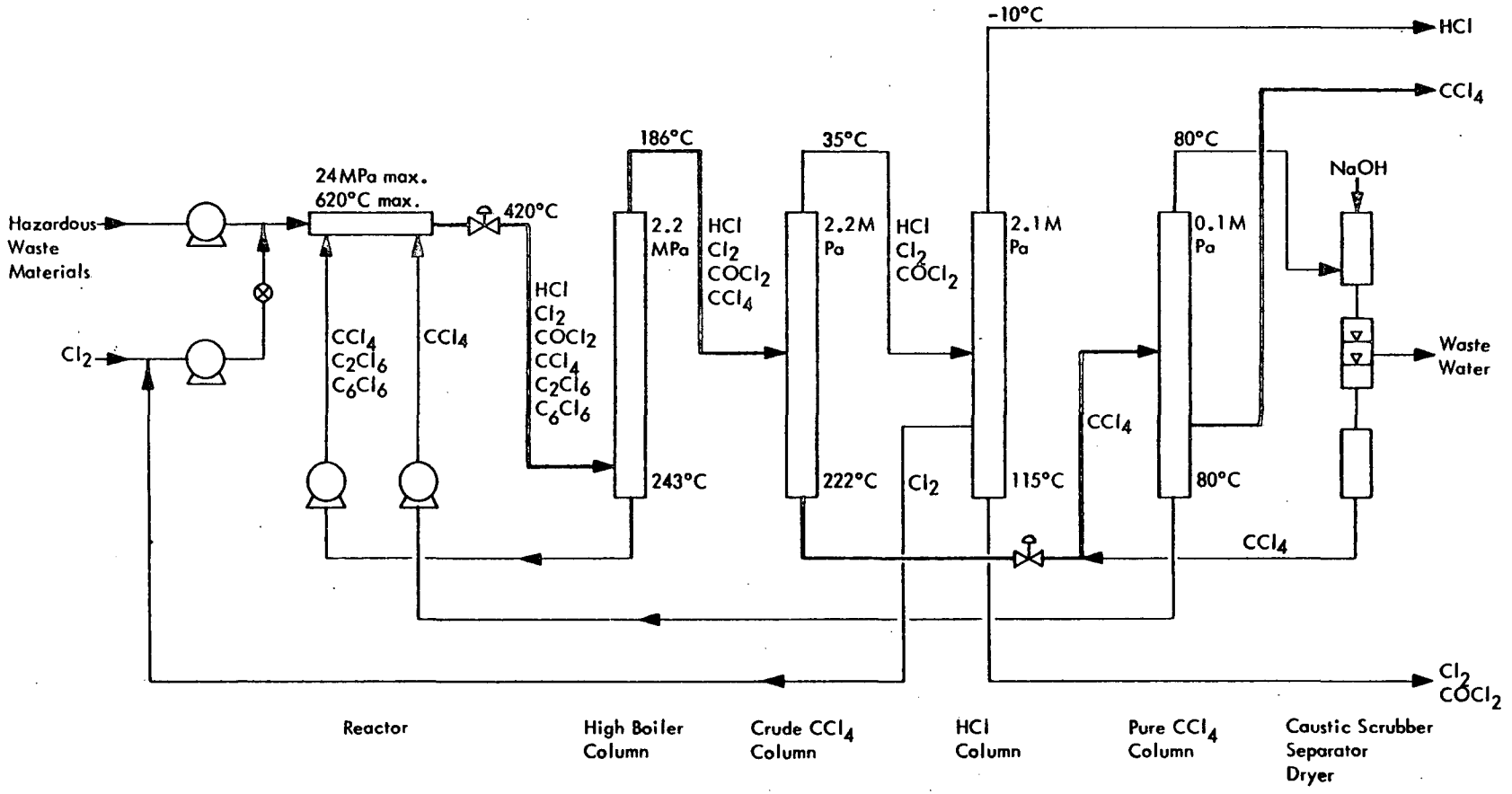

Source: Adapted from Krekeler et al. (1975).

Figure 30. Schematic diagram of the Hoechst AG chlorolysis process.

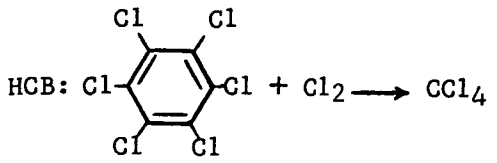

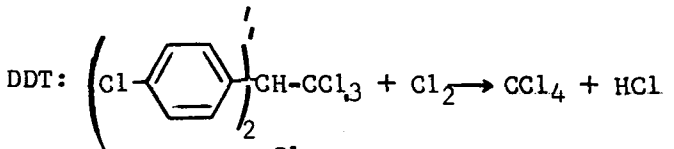

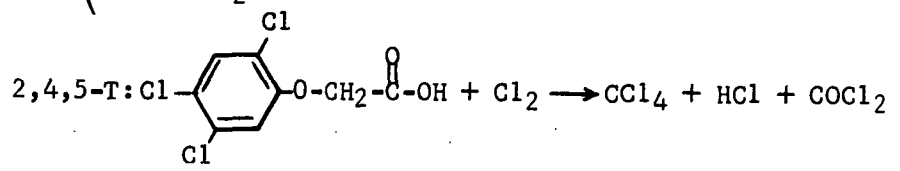

Pesticides and organic wastes that contain sulfur, nitrogen, or phosphorus may have adverse effects on the chlorolysis process. Thus, the presence of sulfur-bearing pesticides in excess of 25 ppm sulfur in the hydrocarbon feed stream may cause severe corrosion of the nickel tube catalytic reactor (Shiver, 1976). There is some question as to whether nitrogen trichloride and phosphorus trichloride or phosphorus pentachloride would be formed in applying the chlorolysis process to nitrogen- and phosphorus-containing pesticides and of the hazards if these products were formed.

More than 550 individual pesticide AI's have been sold commercially in the United States in recent years. Perhaps 200 of these have been produced in volumes of ≥ 500 MT (≥ 1 million pounds) annually. Of the 200 AI's, 30 contain combinations of the elements C, H, Cl, and O. The remaining pesticides contain additional elements such as N, S, and P in various combinations with the elements previously listed.

The 30 pesticides which are the most appropriate candidates for chlorolysis include highly chlorinated hydrocarbons, those based on diene-structures, and other agricultural chemicals, principally fumigants. The highly chlorinated hydrocarbons include:

Toxaphene	Silvex
DDT	Dicamba
2,4-D (acid and esters)	Dicofol
2,4,5-T	Methoxychlor
Pentachlorophenol	DCPA
Trichlorophenols	Endothall
Dichloropropene	Lindane
Dibromochloropropane (DBCP)	Benzene hexachloride
TCA, sodium salt	TIBA (2,3,5-Triiodobenzoic acid)
Dalapon	

Diene-based compounds:

Chlordane
Aldrin
Endrin
Heptachlor

Other agricultural chemicals:

Methyl bromide
Methyl chloride
Ethylene dichloride
o-Dichlorobenzene
p-Dichlorobenzene
Perthane®
TCBC - Trichlorobenzyl chloride

Other types of pesticides containing phosphorus, nitrogen, sulfur, or toxic metals may not be appropriate for chlorolysis. On the basis of limited demonstrations of chlorolysis, we can only indicate potential application to pesticides. Recently cancelled or greatly restricted pesticides are those which are highly chlorinated and those based on diene-structures. Fortunately, these may be the best candidates for chlorolysis.

Catalytic Hydrodechlorination

Workers at Worcester Polytechnic Institute have researched the potential for detoxification of polychlorinated chemicals, including pesticides (e.g., DDT, aldrin, dieldrin, and toxaphene) and polychlorinated biphenyl materials (PCB's), by reaction with high pressure hydrogen gas in the presence of a catalyst (LaPierre, et al., 1977). Thus,

$$RCl_n + xH_2 \xrightarrow[\Delta]{\text{catalyst}} RH_xCl_{n-x} + xHCl$$

where n and x are small integers.

The rationale behind this procedure is that partially dechlorinated or nonchlorinated molecular species may be less toxic and more readily biodegraded than highly chlorinated compounds. Chlorinated pesticides which are capable of being completely converted to hydrocarbons may be useful as fuels, chemical intermediates, or solvents.

Figure 31 presents a schematic flow diagram of the hydrodechlorination process adapted for batch operation. A large scale reactor has not been

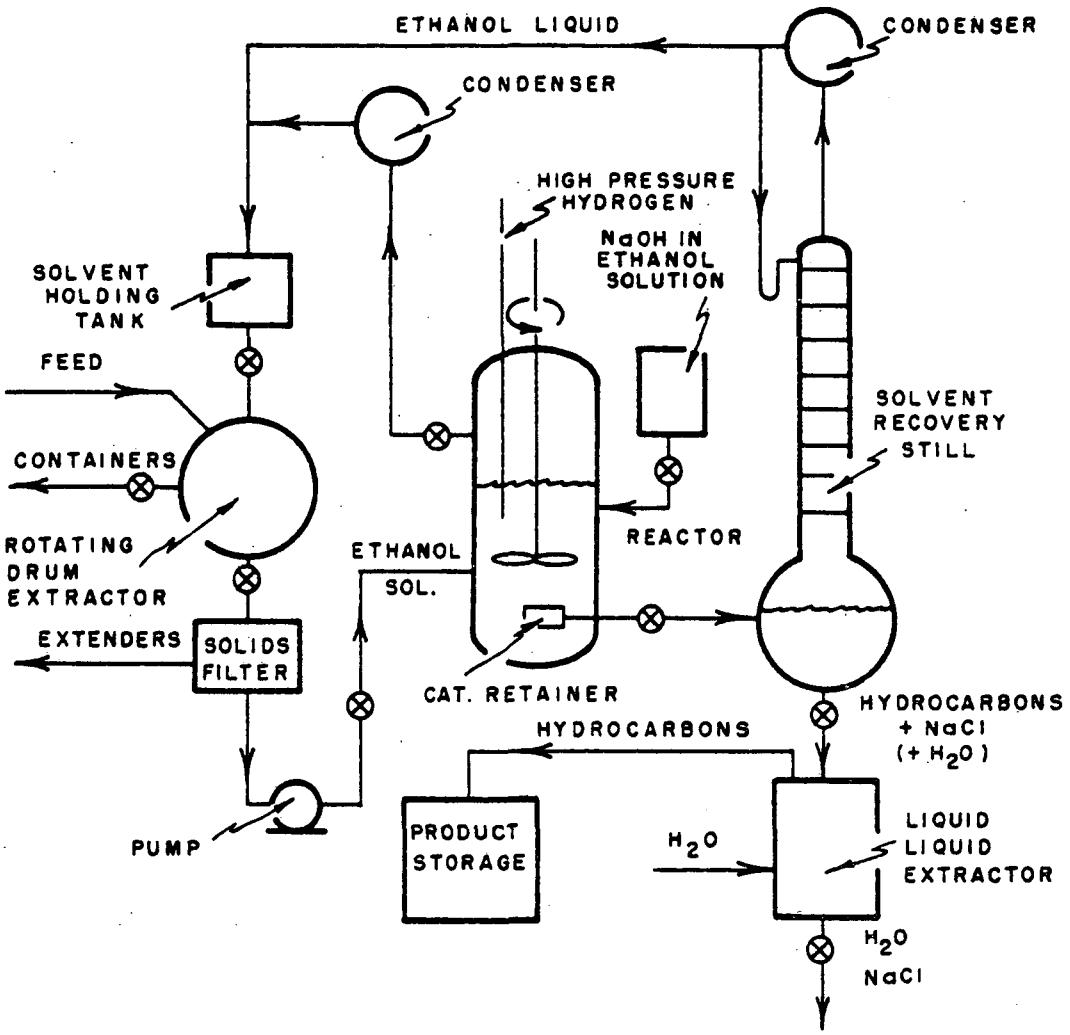

Source: Kranich et al. (1977).

Figure 31. Schematic flow diagram for hydrodechlorination process.

designed, and the figure represents current technology based on laboratory scale experiments (Kranich et al., 1977).

Polychlorinated compounds (including finished pesticide formulations) are charged as a batch to a rotary (tumbling) extractor. Extraction takes place in hot ethanol, and the extracted material is pumped to the reactor vessel. Alcoholic caustic (sodium hydroxide) is then added. The function of the caustic is to react with liberated hydrogen chloride gas which can deactivate the catalyst and also lead to corrosion problems. Next, the reaction vessel is pressured to 3 to 5 MPa (30 to 50 atm) with hydrogen gas.

The prefered catalyst is 61% nickel on kieselguhr, although 10% palladium on charcoal is equally effective. For best results, the catalyst is prereduced in hydrogen at 370°C (698°F). Catalyst particles of 0.15 to 0.30 cm diameter are readily retained on a (698°F) stainless steel screen during reactor vessel discharging. The quantity of catalyst required is 0.2% of the weight of the compound to be dechlorinated.

Reaction conditions for hydrodechlorination vary depending on the polychlorinated compound to be detoxified. However, experimentally determined conditions for pressure and temperature have been defined: 3 to 5 MPa (30 to 50 atm) and 100 to 120°C (212 to 248°F). Reaction times depend on the desired degree of dechlorination for a particular compound. Figure 32 indicates that 85 to 90% of the chlorine may be removed from DDE, toxaphene, and PCB's in about 5 hr (Kranich et al., 1977).

In order to remove chlorine completely from aldrin, dieldrin, and toxaphene, it is necessary to utilize pressures ≥ 5 MPa (≥ 50 atm) and temperatures exceeding 130°C (266°F). These sets of conditions may cause rapid loss of catalyst activity.

After reaction is complete, or the desired degree of dechlorination has been achieved as evidenced by a decreasing demand for caustic, the reaction mixture is pumped to a solvent recovery still. The catalyst particles are retained on a stainless steel screen in the reactor vessel. Ethanol is distilled through a fractionating head, e.g., bubble cap column, and subsequently returned to the solvent holding tank.

The resulting hydrocarbons and possibly some incompletely dechlorinated materials together with salt and small amounts of water introduced from the feed material are washed with water in a liquid-liquid extraction device. The salt water is discarded, and the hydrocarbon materials are stored for possible alternate uses.

Engineering specifications and exact design features have not been developed. The process has not been advanced beyond the laboratory scale, but

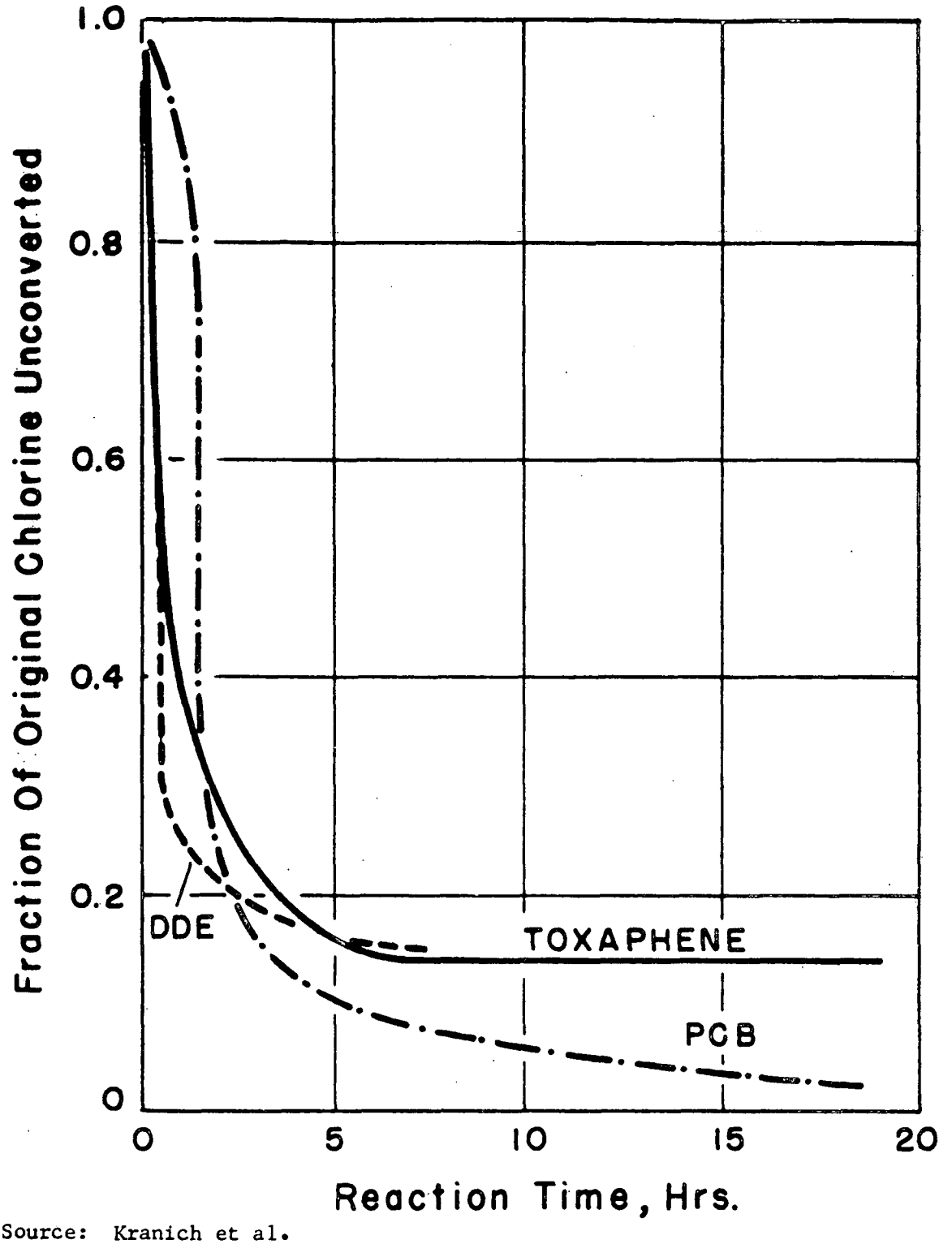

Source: Kranich et al. (1977).

Figure 32. Experimental reaction process for three chlorinated hazardous materials.

an executive summary of the hydrodechlorination process is available (Ebon, 1977).

POTENTIAL IMPACTS

The potential environmental and economic impacts of chlorolysis and catalytic hydrodechlorination as potential alternatives for the disposal of unwanted pesticides are surveyed here.

Potential Environmental Impacts

Chlorolysis of certain types of pesticides and other hazardous chemicals and wastes yields carbon tetrachloride, phosgene, and hydrogen chloride. Control of potential gas and liquid effluents from a large-scale chlorolysis unit is easily achievable through low temperature distillation units, condensers, traps, scrubbers, absorbers, etc. The experience gained by Farbwerke Hoechst AG of Germany will be utilized if a chlorolysis unit to treat organochlorine wastes and other hazardous materials is constructed and operated (Des Rosiers, 1977). Chlorolysis units operating successfully include one in Frankfurt/Main, Germany, and two in Soviet Russia.

An environmental impact statement for a chlorolysis plant has not been formally developed but would be part of the overall assessment necessary prior to construction. The principal environmental factors to be considered include shipment and handling of hazardous organochlorine wastes prior to chlorolysis, control of potential gas and liquid effluents after conversion, and handling and storage of the final products. Current technology ensures a minimum probability of harmful emissions occurring. There is every reason to believe a large-scale chlorolysis unit could effectively operate to convert unwanted pesticides in an environmentally acceptable manner.

We are aware of certain incidents regarding the sudden occurrence of carbon tetrachloride in rivers and municipal drinking water supplies. These events have been traceable to illegal and indiscriminate release of the chemical to the Kanawha and Ohio rivers in February 1977 and to the earlier discovery of small quantities of many organic chemicals, including carbon tetrachloride, in the drinking water of New Orleans in 1974 (Marx, 1977). The most recent example of carbon tetrachloride in drinking water is its unintentional release as a contaminant in chlorine gas used to disinfect water in Philadelphia (Toxic Materials News, 1977). Knowledge of these situations serves notice as potential environmental dangers when considering the construction and operation of a chlorolysis facility to treat hazardous waste materials.

Phosgene waste generally occurs as a contaminant in gaseous vent streams. Proper waste management options include: hydrolysis with steam followed by

sodium carbonate solution scrubbing; sodium hydroxide or ammonia solution scrubbing in a packed tower; or reaction with alcohols to form chloroformates and subsequently polycarbonates (Ottinger et al., 1973).

No environmental impact statement has been developed for the hydrodechlorination process. However, hydrodechlorination appears technologically feasible in large scale and probably can be performed without harm to the environment. It utilizes hydrogen gas at elevated pressures which requires care but is a standardized industrial procedure. The waste stream will contain hydrocarbons, perhaps partially dechlorinated species, and salt. The hydrocarbon and other organic species must be separated from the waste stream by liquid-liquid extraction and ultimately disposed, such as incineration, or utilized as chemicals or solvents elsewhere.

Finally, we note that hydrodechlorination and chlorolysis are related and one process can be thought of as the converse of the other:

$$\underset{\text{(pesticides)}}{\text{Chlorocarbons}} + Cl_2 \xrightarrow[\Delta]{\text{catalyst}} CCl_4 + HCl + COCl_2$$

Chlorolysis

$$\underset{\text{(pesticides)}}{\text{Chlorocarbons}} + H_2 \xrightarrow[\Delta]{\text{catalyst}} \underset{\text{(or partially dechlorinated species)}}{\text{Hydrocarbons}} + HCl$$

Hydrodechlorination

In one process, a useful solvent, an acid, and a chemical intermediate are formed. In the other process, an acid and hydrocarbons or other chemical species of potential use as chemical intermediates or as fuel are produced. The environmental impacts of both procedures need to be addressed.

Potential Economic Impacts

At least one cost estimate for a chlorolysis plant has been made (Samfield, 1978). A plant with a capacity to process 25,000 MT/year of waste hydrocarbons or chlorohydrocarbons could yield approximately 15% discounted cash flow rate of return on investment at a disposal cost of approximately $133/MT. Operating and financial data are estimated in Table 24.

The capital investment for primary and auxiliary facilities may be as high as approximately $27 million for a plant processing 25,000 MT/year of organochlorine waste. The cost to destroy chlorohydrocarbons may be $0.13/kg

TABLE 24. OPERATING AND FINANCIAL DATA FOR A CHLOROLYSIS FACILITY PROCESSING 25,000 MT/YR OF ORGANOCHLORINE WASTE

Category	Quantity
Process data	
Chlorine gas consumption	93,800 MT/yr
Carbon tetrachloride produced	88,500 MT/yr
Hydrogen chlorine produced	30,000 MT/yr
Reactor temperature	600°C
Reactor pressure	200 atm.
Cost data	
Depreciable investment	$27,210,000
Working capital	4,708,000
Annual operating cost, including royalty	19,881,000
Revenue from CCl_4 and HCl	28,050,000
Unit disposal cost at 15% discounted cash flow rate of return (DCFRR)	$133.59/MT

Source: Samfield (1978).

Assumptions:
- Location - Gulf Coast area.
- CCl_4 selling price - $300/MT.
- HCl selling price - $50/MT.
- Depreciation - 10 yr straightline.
- Income tax rate - 50%.
- Feedstock - vinyl chloride monomer wastes.

($0.061/lb) assuming the present market price of $300/MT for carbon tetrachloride is upheld (Samfield, 1978).

An EPA document detailing economic analysis for the chlorolysis process will soon be available. Utilizing the most current production data (1975) for carbon tetrachloride, a chlorolysis unit may be capable of adding an additional 12% or 83,000 MT (91,000 tons) of carbon tetrachloride to the current estimated capacity of 670,000 MT (740,000 tons) to give a total capacity of 750,000 MT (830,000 tons). However, production of carbon tetrachloride accounted for an estimated 70% of capacity in 1975 (Chemical Marketing Reporter, 1975). Thus, any additional capacity is probably unnecessary and new production would be hard-pressed to penetrate the carbon tetrachloride market unless it possessed a price advantage.

Furthermore, about 90 to 95% of all carbon tetrachloride produced is utilized in the manufacture of F-11 and F-12 for use as refrigerants and aerosols. The future markets of these two chlorofluorocarbons are uncertain because of the chlorofluorocarbon/ozone depletion controversy.

Thus, potential growth and even maintenance of the carbon tetrachloride market is questionable. Pricing strategies and operating costs may eventually be the dominant issues that determine which manufacturers and processes are economically viable in a declining future market.

Regarding the proposed hydrodechlorination conversion process, there are no economic data available to permit an economic assessment. It is clear, however, that hydrocarbons produced by this potential method would be far more expensive as fuel oil than commercial sources. The economic assessment and implications of commercialization of the hydrodechlorination must await development of engineering cost estimates.

Future Research Needs

Farbwerke Hoechst AG, Frankfurt/Main, Germany, operates a 50,000 MT/year reactor which exhaustively chlorinates still-bottom residues from some of its aliphatic chemical manufacturing operations. The resulting carbon tetrachloride is utilized internally. Two large chlorolysis reactors for conversion of still-bottom residues have been sent to the Soviet Union (Des Rosiers, 1977).

Chlorolysis for disposal of some classes of pesticides appears to be a feasible method. It is underdeveloped and underutilized at present. Environmental and economic impacts must be further developed.

The theoretical basis and laboratory feasibility for the hydrodechlorination process have been established. Developments beyond this stage, i.e., pilot plant scale, have not been accomplished.

Other classes of pesticides have not been examined for potential detoxification by hydrogenation. Specific candidates may be limited to chlorinated and/or olefinic materials. Organometallic pesticides probably should not be hydrogenated because highly dangerous hydrides may form, e.g., arsine gas.

On the basis of successful laboratory demonstrations, it is clear that a second phase of developmental work needs to be undertaken before final assessment of the hydrodechlorination process can be made. The data base needs to be expanded and extended to other kinds of pesticides. The environmental desirability or acceptability of discarding partially dechlorinated hydrocarbon species as well as economic impacts have not been assessed.

REFERENCES

Anon. Environmental Science and Technology, 8(1):19 (1974).

Chemical Marketing Reporter, June 2, 1975. p. 9.

Des Rosiers, P. Industrial Pollution Control Division, Office of Research and Development, Environmental Protection Agency, Washington. Personal communication to R. Wilkinson, Dec. 14, 1977 and May 8, 1978.

Ebon Research Systems. Catalytic Hydrodechlorination of Polychlorinated Pesticides and Related Substances--An Executive Summary. EPA-600/8-77-013, Sept. 1977.

Kranich, W. L., R. B. LaPierre, and A. H. Weiss. Process for Catalytic Hydrodechlorination of Polychlorinated Hydrocarbons. Presented at the American Chemical Society Division of Pesticide Chemistry. 194th National Meeting, Chicago, Illinois, Aug. 30, 1977.

Krekeler, H., H. Meident, W. Riemenschneider, and L. H. Hornig. U.S. Patents 3,651,157 (March 21, 1972) and 3,676,508 (July 11, 1972).

Krekeler, H., H. Schmitz, and D. Rebhan. The High-Pressure Chlorolysis of Hydrocarbons to Carbon Tetrachloride. Paper presented at the National Conference on the Management and Disposal of Residues for the Treatment of Industrial Wastewaters, Washington, D.C., Feb. 3-5, 1975.

LaPierre, R. B., E. Biron, D. Wu, L. Guczi, and W. L. Kranich. Catalytic Conversion of Hazardous and Toxic Chemicals: Catalytic Hydrodechlorination of Polychlorinated Pesticides and Related Substances. PB-262 804, 1977.

Marx, J. L. Drinking Water: Getting Rid of the Carbon Tetrachloride, Science, 196, 632-636 (1977).

Ottinger, R. S., J. L. Blumenthal, D. F. Dal Porto, G. I. Gruber, M. J. Santy, and C. C. Shih. PB-224590. Aug. 1973.

Samfield, M. Industrial Environmental Research Laboratory, Environmental Protection Agency, Research Triangle Park, North Carolina. Personal communication to R. Wilkinson, June 28, 1978.

Shiver, J. K. Converting Chlorohydrocarbon Wastes by Chlorolysis, Environmental Protection Agency, PB 259 935, Oct. 1976.

Toxic Materials News, Nov. 23, 1977. p. 267.

SECTION 9

DISCUSSION

INTRODUCTION

This section of the report presents an overview of recent research on various pesticide disposal or conversion methods from technical, environmental, and economic viewpoints. These methods are rank-ordered according to potential large-scale application. Significant technical information gaps and potential pesticide disposal problems are noted. Of particular importance is the identification and evaluation of those disposal procedures and safety precautions that are suitable for use by the layperson and those that are more suitable for handling relatively large quantities of unwanted pesticides by trained personnel in well-equipped facilities; e.g., by a government agency. The section closes with a discussion of new directions for disposal research and development appropriate to the objectives of the EPA.

OVERVIEW OF PESTICIDE DISPOSAL AND CONVERSION METHODS

Table 25 indicates those pesticides and disposal and conversion methods which have been investigated and discussed in the previous major sections of the report. The pesticide classification system contained in Table 25 is based on: (a) common dominant functional groups which determine decomposition chemistry, and (b) considerations of toxicity. Further details and the rationale for development of this particular pesticide classification system may be found by consulting Lawless et al. (1975).

Most R&D on pesticide disposal has focused on incineration of chlorinated hydrocarbons. There have been at least seven in-depth incineration studies of DDT, two of Herbicide Orange, and two studies of chlorinated hydrocarbon wastes. The latter two studies were not concerned with pesticides per se, but the information gained was directly applicable to the destruction of chlorinated hydrocarbon pesticides. Some incineration studies have concentrated on the chlorinated "dienes" (e.g., aldrin, chlordane, Kepone®) class of compounds because of concern over these environmentally persistent materials and the Kepone® tragedy in Hopewell, Virginia, in 1976.

TABLE 25. SYNOPSIS OF PESTICIDE DISPOSAL AND CONVERSION RESEARCH METHODS

Technique	Pesticide classification[a/]						
	Inorganic and metallo-organic pesticides	Phosphorus-containing pesticides	Nitrogen-containing pesticides	Halogen-containing pesticides	Sulfur-containing pesticides	Botanical and microbiological pesticides	Organic pesticides, not elsewhere classified
Disposal methods							
Incineration	Not recommended	Disulfoton, Malathion	Atrazine, Captan, Picloram, Zineb	Aldrin, Chlordane, 2,4-D, DDT, Dieldrin, Herbicide Orange, Kepone®, Lindane, Mirex, 2,4,5-T, Toxaphene	-	-	-
Biological treatment	-	Cyanophos, Diazinon®, Dursban®, EPN®, Fenitrothion, Methyl parathion, Paraoxon, Parathion, Triazophos	-	2,4-D, 2,4,5-T, HCB, PCP, p-Dichlorobenzene	-	-	-
Microwave plasma	Phenyl mercuric acetate	Malathion	-	Kepone®, Methyl bromide, PCB's	-	-	-
Photolysis	-	Fenitrothion, Guthion®	Ametryne, Amitrole, Atrazine, Bromacil, Carbaryl, Monuron, Picloram, Propham, Trifluralin	Aldrin, Amiben®, Bromoxynil, 4-CPA, 2,4-D, DDT, Dieldrin, Endrin, Heptachlor, Isodrin, PCP, TCDD	-	-	-
Activated carbon and resin adsorption	-	-	-	Endrin, Heptachlor	-	-	-
Hydrolysis	-	DDVP, Diazinon®, Guthion®, Malathion, Methyl parathion, Naled, Parathion, TEPP	Atrazine, Captan, Carbaryl, Propoxur	-	-	-	-
Molten salt baths	-	Malathion, Malathion/DDT mixture	Carbaryl	Chlordane, Chloroform, 2,4-D, DDT	-	-	-
Ozonation/ ultraviolet irradiation	-	Malathion	Propoxur, Vapam®	DDT, PCP	-	-	-
Wet air oxidation	-	-	Atrazine	Amiben®, 2,4-D, DDT, PCP	-	-	-
Catalysis	-	-	-	Chlordane, DDT, Endrin, Heptachlor, Lindane	-	-	-
Land disposal	-	Diazinon®, Malathion, Methyl parathion, Parathion	Captan, Carbaryl, EPTC, Fluometuron, Metalkamate, Nitralin, Trifluralin	Aldrin, Amiben®, 2,4-D, Dieldrin, Methoxychlor, PCNB, PCP, 2,4,5-T	-	-	-
Conversion methods							
Chlorolysis	-	-	-	Organochlorine still bottom residues	-	-	-
Hydrodechlorination	-	-	-	Aldrin, DDT, Dieldrin, PCB's, Toxaphene	-	-	-

a/ As classified in Lawless et al. (1975).

Incineration of most other pesticide classes has not been adequately studied although there have been studies of representative pesticides of several classes, such as malathion, disulfoton, zineb, atrazine, captan, and picloram. We call attention to the absence of incineration data within the nitrogen-containing classification for anilides, ureas, uracils, nitrated hydrocarbons, and other types of pesticides. It is important to note that EPA recommends recovery of economic values for heavy metal pesticides and recommends against high temperature incineration of organometallics which contain organic mercury, lead, cadmium, or arsenic (Federal Register, 1974).

Biological methods, including bacterial and enzymatic processes, are under rapid development, but many classes of pesticides have yet to be investigated with these methods. Biological disposal techniques are underresearched and underdeveloped at present.

Many photolytic studies of individual pesticides in several classes have been performed, but practical or large-scale demonstration of this method has not been reported except for the degradation of TCDD. Much basic laboratory and field data on the fundamentals of photolysis remain to be developed.

Other physical and chemical disposal procedures have been developed and applied to pesticides on what has been almost a random basis. The techniques of microwave plasma and molten salt baths have been utilized to develop useful data for several pesticide classes. However, both of these methods presently remain at the bench level and have yet to be demonstrated on a large scale.

Catalytic liquid disposal processes are presently only laboratory demonstrations although reductive degradation by metallic couples is under pilot-scale development and testing. Again, only a few classes of pesticides have been examined.

Land disposal of pesticides has been the focus of several R&D studies, and a fairly large body of information over several classes of pesticides has been developed on this method. Sanborn (1977) has suggested that land disposal may be limited to specific pesticides and may not be a generally applicable procedure.

The conversion methods, chlorolysis and hydrodechlorination, to recover economic values have been applied only to chlorinated pesticides; this class of pesticides may be most amenable to these methods.

Evaluation of Pesticide Disposal and Conversion Methods

As an aid in assessing the potential usefulness of these methods, these techniques have been rank-ordered in Table 26 according to the potential for large-scale application; i.e., practical field disposal or conversion techniques for large quantities of unwanted pesticides. The table also presents

TABLE 26. TECHNICAL, ENVIRONMENTAL, AND ECONOMIC COMPARISON OF DISPOSAL OR CONVERSION PROCEDURES FOR PESTICIDES

Disposal or conversion method	Potential for large scale application	Current status of technology[a]	Potential application[b]	Environmental impact[c]	Economic cost impact[d]
Incineration	High	1	4	7, 10	16
Activated carbon and resin adsorption	High	1	5	7, 10, 11	14, 17
Chlorolysis	High	1	5	7, 10, 12	16, 17, 18
Microwave plasma destruction	High	2	4	7, 10	14
Molten salt baths	Medium	2	4	7, 10	16
Hydrolysis	Medium	2	5	8, 10	13
Reductive degradation with metallic couples	Medium	2	5	8, 10	14
Wet air oxidation	Medium	2	5	8, 10	15
Hydrodechlorination	Low	2	5	8, 10	14, 17
Ozonation/UV irradiation	Low	2	5	8, 10	16
Catalytic dechlorination with nickel boride	Low	2	5	8, 10	14
Sonocatalysis and catalytic ozonation	Low	3	5	8, 10	16
Biological	Low	3	5	8	14
Photolysis	Low	3	5	8, 10	14
Land disposal	Low	3	5	9	13
Chemical fixation	Nil	3	6	9	13

a/ 1. Method is at or near demonstration phase. 2. Proven research method. 3. Limited or no data base.

b/ 4. Potential wide application for many classes of pesticides. 5. Limited application. 6. Unproven application.

c/ 7. Potential controllable method with a minimum environmental impact. 8. Potential residual toxicity of decomposition products. 9. Unknown fate of disposed pesticides. 10. Potential ash or wastewater disposal problem. 11. Requires recycling or disposal of adsorption medium and adsorbed pesticides. 12. Chlorine gas handling problems. Potential release of chlorocarbons to the environment.

d/ 13. Low capital investment and moderate operating costs. 14. Moderate capital investment and operating costs. 15. Large capital investment and moderate operating costs. 16. Large capital investment and operating costs. 17. Resource recovery option. 18. Potential return on investment.

qualitative statements concerning potential environmental and economic impacts. Each disposal or conversion method has advantages and disadvantages and these are briefly indicated in Table 26; details may be found in earlier sections of the report.

Those methods categorized as "High" and "Medium" appear to hold promise for large-scale application and are worthy of continued research and development. Those methods categorized as "Low" may not be viable as practical large-scale disposal or conversion methods. Or, a more complete data base may be required for proper assessment. Chemical fixation is probably a misapplication for the disposal of pesticides.

Tables 25 and 26 present the state-of-the-art information base for pesticide disposal by pesticide category for incineration, biological, physical-chemical treatment, land disposal, and conversion methods. The tables are useful as a capsule review of what research and development for the disposal or conversion of pesticides has been accomplished and where specific technical information gaps exist.

Technical Information Gaps

Obviously, much of the vital information required to develop and advance many of the alternate disposal or conversion procedures for pesticides remains to be generated at the laboratory level. Other procedures need to be advanced to the pilot plant level. Still others require more detailed environmental and/or economic impact assessment. Not one method described in the body of the report is ready for full-scale general application. This general statement is valid for individual methods when the various factors (technical information base, environmental impact, and economic impact) are all taken into consideration.

RECENTLY IDENTIFIED PROBLEM PESTICIDES

In spite of the large amounts and variety of pesticides produced and used annually in the United States, approximately 55 pesticide AI's and their associated formulated products are considered waste disposal "problems" because of general human health or ecological concern or specific, widely reported incidents. Table 27 lists the "offenders" and is a compilation based on references given at the bottom of the table. This list includes so-called "RPAR" chemicals, i.e., those pesticides whose re-registration is being questioned by the EPA, but does not include all pesticides that pose a potential disposal problem. Rather, it identifies current and past prominent cases involving some problematic pesticides which have been or are produced in relatively large quantities.

TABLE 27. RECENTLY IDENTFIED PROBLEM PESTICIDES

Pesticide classification	Problem pesticides
Inorganic and metallic-organic pesticides	Organoarsenicals and organomercury compounds, PMA,* thallium sulfate
Phosphorus-containing pesticides	DDVP,* DEF®, dimethoate, EPN,* merphos phosvel®, ronnel, trichlorfon
Nitrogen-containing pesticides	Amitraz, benomyl, captan,* carbaryl,* diallate, kaybam, maleic hydrazide, maneb, monuron,* nabam, paraquat, pronamide, triallate, zineb*
Halogen-containing pesticides	Aldrin,* BHC, chloranil, chlordane,* chlorobenzilate, chloroform,* DBCP, DDT,* dieldrin,* endrin,* ethylene dibromide, heptachlor,* Herbicide Orange,* Kepone®,* lindane,* mirex,* methoxychlor,* PCNB,* PCP,* Perthane®, Strobane®, 2,4,5-T,* toxaphene,* trichlorfon
Sulfur-containing pesticides	Aramite®
Botanicals and microbiological pesticides	Strychnine
Organic pesticides, not elsewhere classified	Compound 1080, creosote, ethylene oxide, piperonyl butoxide

Source: U.S. Environmental Protection Agency, Washington, D.C., February 1976.
Chemical and Engineering News, June 14, 1976, p. 18.
Pesticide and Toxic Chemical News, 5(32), July 6, 1977. Special Index Issue.

* Problematic pesticides that have been evaluated in pesticide disposal research studies.

Many in-depth studies to learn the most efficient and complete route for destruction of several of these formulated pesticides have been performed. Thus, as cited earlier, many studies have been concerned with DDT; and at least two incineration studies each of Herbicide Orange and Kepone® have been performed.

The pesticide of most recent concern in the fumigant, 1,2-dibromo-3-chloropropane (DBCP), manufactured in the past by Dow Chemical--USA, Occidental Chemical Company, and Shell Chemical Company. Recent production levels may have been near 9,000 MT (20 million pounds) annually. There has not been a single in-depth study performed to learn how to destroy this chemical economically and efficiently.

A review and evaluation of the published literature revealed that of the 55 chemicals previously listed as potential or actual pesticide disposal problems, 23 have been researched for potential disposal methods which could be made environmentally acceptable. In Table 27 these pesticides have been indicated by an asterisk. Incineration appears to be the only practical disposal route for many of these pesticides since they are largely refractory, highly chlorinated chemicals.

SELECTED DISPOSAL PROCEDURES

In this subsection selected disposal procedures are discussed for both small and large quantities of unwanted pesticides. The first category is relevant to the disposal of < 25 kg (< 50 lb) or < 20 liters (< 5 gal.) of pesticide as may be required by the layperson (farmer, householder, county extension agent, etc.), and the second category relates to the disposal of "tonnage" quantities of pesticide that may be required by the EPA, state and local agencies, manufacturers, and formulators.

These areas have been addressed by two previous documents by Lawless et al. (1975) and Shih and Dal Porto (1975). Each contains much useful information on the disposal of pesticides.

Disposal of Small Quantities of Pesticides

The recommendations addressed to the layperson in Lawless et al. (1975) are still largely valid although recent Federal, state, and local regulations may make some specific recommendations obsolete. Thus, for each pesticide or mixture, one or more disposal procedures may be selected from the recommended listing. These procedures have previously been categorized and presented in Table 12.

Any chemical detoxification procedure carried out by the layperson must be done with the utmost caution. Further, some degradation processes which

destroy the AI may leave unknown or unsuspected toxic residues; e.g., the acid hydrolysis of Diazinon®. This finding causes any chemical detoxification process to be "suspect" until the residual products are determined to be safe; e.g., by aquatic bioassay.

Burial in the ground or ground surface disposal of small quantities of pesticide would be permissable, provided that these procedures are not locally restricted and with cognizance of potential groundwater contamination and preventive action taken.

Prohibited methods, or those likely to be prohibited in the near future include: open dumping, open burning (except small amounts of empty combustible containers), water dumping, ocean dumping, and well injection without a permit. Release to the atmosphere of volatile compressed gases or aerosol formulations is suspect because of potential, unknown photolytic reactions occurring in the atmosphere, and/or the release of chlorofluorocarbons which may be part of the propellant system.

The report on pesticide disposal previously cited (Lawless et al. (1975) clearly emphasizes safety precautions appropriate for the layperson and urges the use of good personal judgment and caution in applying any disposal procedure recommended by responsible authorities. The layperson should make no attempt to conduct chemical detoxification procedures if any of the extremely toxic pesticides are involved ($LD_{50} \leq 10$ mg/kg) or if substantial amounts (≥ 25 kg or ≥ 20 liters) of surplus pesticides are to be disposed.

Further, chemical detoxification methods are inherently potentially dangerous. A recent report on chemical methods of pesticide disposal (Shih and Dal Porto, 1975) emphasizes that treatment by alkali is effective and environmentally sound method for only 7 of the 20 prominent pesticides investigated. The report cautions against acid or alkaline hydrolytic treatment that might yield degradation products that are either toxic or may be suspected carcinogens. A final conclusion of the report is that there is presently insufficient information to develop chemical detoxification procedures for most of the pesticides commonly in use.

Presented in Table 28 are the 14 general disposal procedures for possible application by the layperson to the seven classes of pesticides considered in this report. The table indicates the number of times a particular disposal procedure is the preferred procedure for each class of pesticide. Procedures 1, 2, and 3 are similar and have been considered as equivalent; however, some pesticides can be disposed of by several recommended procedures.

Procedures 1 through 3 are recommended most frequently for pesticide disposal. Incineration is an effective disposal procedure but generally unavailable to the layperson. Open burning, dilution, and release to the air

TABLE 28. RECOMMENDED DISPOSAL PROCEDURES FOR SMALL QUANTITIES OF UNUSED PESTICIDES

		Pesticide classification[a]							
		Inorganic and metallo-organic pesticides	Phosphorus-containing pesticides	Nitrogen-containing pesticides	Halogen-containing pesticides	Sulfur-containing pesticides	Bontanical and microbiological pesticides	Organic pesticides, not elsewhere classified	Total
	Number in Class	82	93	189	90	15	19	45	533
No.	Disposal procedures								
1.	Turn in to pesticide collection center	42	80	27	12	5	4	2	172
2.	Return to supplier	42	80	27	12	5	4	2	172
3.	Turn in to industrial waste service	42	80	27	12	5	4	2	172
4.	Place in trash for pick-up service	1	-	12	1	-	2	5	21
5.	Incineration	5	-	91	64	10	2	10	182
6.	Open burning	-	-	2	-	5	2	1	10
7.	Treatment with alkali	4	34	18	6	3	-	1	66
8.	Treatment with acid	-	1	12	1	-	-	-	14
9.	Treatment with oxidants	3	1	-	1	2	-	-	7
10.	Treatment with reducing agent	-	-	-	-	-	-	-	0
11.	Burial in the ground	38	3	33	6	12	2	16	110
12.	Ground surface dilution	1	-	-	5	2	1	2	11
13.	Dilution	2	-	1	-	3	2	4	12
14.	Release to the air	-	-	-	1	1	-	2	4

a/ As classified in Lawless et al. (1975).

would not be permissible under some conditions or are contrary to recommended procedure. Burial or ground surface disposal must not be performed unless appropriate precautions are taken to assure that ground and surface water contamination does not occur. The remaining procedures involve chemical detoxification which should be undertaken with the utmost caution and with consultation from the pesticide "handbook" (Shih and Dal Porto, 1975) and/or "disposal guidelines" (Lawless et al., 1975) and upon recommendation from a responsible authority.

Disposal of Large Quantities of Pesticides

The disposal of large quantities of unwanted pesticide is hindered by definite information gaps about the available methods as noted by a recent Office of Solid Waste Management Programs document (Münnecke et al. 1976). Specifically, for biological and land disposal techniques, the roles and utility of soil incorporation, activated sludge, and bacterial/enzymatic methods are poorly understood and have not been sufficiently researched at present. The fundamental research and development questions posed by Münnecke et al. (1976) have not been answered. These questions are concerned with: pesticide volatilization and the potential hazards to workers in the area; degradation rates; pesticide migration in soil; and economic considerations. The reader is referred to Münnecke et al. (1976) for further details of present technology gaps.

For incineration technology, the basic questions regarding operating parameters and limitations for commercial incinerators currently available have not been completely answered. These questions include: which pesticides and which formulations can safely be incinerated; what constitutes proper handling of pesticides and their containers prior to the actual incineration process; what are the necessary operating conditions for complete degradation; what constitutes proper control of off-gases; and what constitutes safe disposal of ash residues?

Many of the pesticide incineration studies have been made with specialized, research type incinerators rather than commercially available incinerators, thus creating a potential difficulty in extrapolation of research data to practical field disposal conditions.

As of the time of this writing (May 1978) no incinerators or classes of incinerators have been designated as the standard of comparison for efficiency of destruction nor have limits been defined for acceptable efficiencies. Tentative operational conditions of two second dwell time at 1000°C have been established, but the applicability of these or other sets of operational conditions to the various classes of pesticide has not been clearly established.

Thus, the EPA is not yet in a position to provide concise recommendations to manufacturers, distributors, state and local agencies as to the best technology for incineration of large quantities of pesticides.

Many studies of physical-chemical disposal methods have been carried out at the bench scale, but no chemical procedure has been recommended for disposal of large quantities of any specific class of pesticide. (Several technologies, however, may ultimately be successful.) Research has shown that present physical-chemical procedures generally fall short of 100% destruction. Often times, only a portion of the pesticide molecule is affected and the intermediate material may be as hazardous as the original AI.

Information gaps include uncertainties about: the ultimate role that hydrolysis reactions may play; the effect of concentrated chemical environments on general decomposition parameters derived from dilute solution data; and the environmental effects of the final reaction mixture after the degradation/detoxification reaction is complete.

The possible use of sequential combinations of chemical and biological treatment of pesticides has not been investigated extensively for pesticide disposal.

In summary, there has not been a single biological, incineration, or physical-chemical degradation method advanced for wide usage by the layperson in the field or for use in decomposing large quantities of pesticides by trained personnel.

The crucial problem of disposal of large quantities of unwanted pesticides remains unsolved. Critical information necessary for the large scale use of biological, landfill, incineration, and physical-chemical procedures is unavailable at the present time. Research in all these areas remains at the bench level and must be advanced to the pilot plant demonstration level with the further stipulation that whatever disposal procedures are selected they must be commercially adaptable.

NEW DIRECTIONS FOR DISPOSAL RESEARCH AND DEVELOPMENT

On the basis of the information developed in this report, new directions can be suggested for research and development appropriate to field disposal of: (a) small quantities of pesticides and (b) large quantities of pesticides.

Small Quantities of Pesticides

Disposal research and development is divided into two areas: (a) chemical detoxification procedures that are proven to be effective, safe to the layperson, and environmentally sound; and (b) procedures appropriate to mixtures of pesticide AI's as may be found in finished formulations.

Chemical Detoxification Methods--

Based on information contained in the report by Lawless et al., we cite a passage having a bearing on the appropriate direction that research and development for the disposal of small quantities of pesticides should take:

> "Over 25% of the pesticides are so hazardous to man or the environment or the state of knowledge on their degradation is so incomplete that the recommended disposal procedure is for the layperson to place his pesticide in the hands of a professional rather than to attempt to detoxify himself; i.e., turn it into a collection center, return it to a supplier, or transfer it to an industrial waste service. For all but the most toxic of these pesticides, however, alternative disposal procedures have been listed. Another group of approximately 30% of the pesticides are so environmentally persistent, thermally stable, or resistant to chemical degradation that the preferred disposal procedure is incineration in efficient equipment of a type not normally owned by a layperson. Alternate disposal procedures have also been suggested for many pesticides of this group. For the remaining 45% of the pesticides, disposal procedures are recommended which the layperson can use: chemical detoxification is suitable for 15% of the total and either burning, ground burial, ground surface disposal, dilution, or release to the air may be employed for 30% of the total." (Lawless et al., 1975, p. v).

Thus, of some 550 commercially important pesticide AI's, only approximately 80 may be detoxified safely by chemical treatment by laypersons. Further examination of the primary recommended methods indicates that 60 involve alkaline hydrolysis; 13 involve acidic hydrolysis, and 6 involve treatment with oxidants (e.g., bleach or hydrogen peroxide). No primary recommended methods to dispose of synthetic organic pesticides involve reductants (e.g., sodium thiosulfate or sodium bisulfite).

Examination of secondary recommended chemical treatment methods show that alkaline hydrolysis is an alternative for 107 pesticides, acidic hydrolysis for 6 pesticides, and chemical oxidation for 4 pesticides. Again, alkaline hydrolysis is the major choice (167 cases) for chemical detoxification.

As developed in Section 6, alkaline hydrolysis of pesticides has been the subject of several research studies. These studies indicate the potential usefulness of this general method for specific classes of pesticides (e.g., organophosphorus compounds and carbamates), but as yet there has not been widespread acceptance of the method.

Appropriate research and development is to focus on the prominent method, alkaline hydrolysis, and require that the final reaction product mixture of any disposal method be nontoxic to fish, wildlife, and the environment as a

whole as well as being safe for the layperson to perform. This may necessitate chemical analysis and/or aquatic bioassay after neutralization of the excess hydroxide.

Similar studies could be undertaken for acidic hydrolysis or chemical oxidation, but the total number of pesticides for these categories is only approximately 20 to 30, depending on whether the methods include primary or both primary and secondary recommendations.

The question of the advisability and utility of chemical treatment of pesticides by the layperson can be answered by a minimum of additional research and development studies of alkaline hydrolysis with analysis and aquatic bioassay of the final reaction mixture. Any chemical treatment which cannot be made environmentally safe or which does not possess a minimum risk should not be considered potentially useful even though it successfully detoxifies the AI.

It is not necessary to apply alkaline hydrolysis with aquatic bioassay tests to all 167 pesticides. It is more appropriate to consider only those utilized in relatively large quantities, ≥ 1,000 MT (≥ 2 million pounds) annually. Table 29 indicates 26 candidate pesticides as arranged by class and decreasing estimated production level.

Pesticide Mixtures--

Many common agricultural, home, and garden products contain mixtures of several pesticide AI's combined with adjuvants, diluents, solvents, and synergists. An example is an insecticide containing toxaphene 0.7 kg/liter (6 lb/gal.) and methyl parathion 0.2 kg/liter (2 lb/gal.) which is marketed as an emulsifiable concentrate. A second example is a rose and floral dust fungicide-insecticide combination containing carbaryl 3% (W/W), dicofol 1.5% (W/W), folpet 5% (W/W), and malathion 4% (W/W).

The exact number of pesticide products containing two or more AI's is unknown but may be in excess of 500 (Billings, 1975). Likewise, estimates of individual and total production of these pesticide mixtures is unknown. The popularity of these products is highly variable.

Practically all previous laboratory studies have determined disposal procedures for pure AI's but seldom have commercial pesticide products been examined. What is needed are disposal methods suitable for the layperson for finished formulations which may contain two or more AI's. It is insufficient to direct a small farmer to treat small quantities of the toxaphene and methyl parathion formulation cited earlier with caustic to destroy the methyl parathion because toxaphene will be largely unaffected. In this case, caustic treatment followed by burial is advisable or simply burial alone.

TABLE 29. ESTIMATED PESTICIDE PRODUCTION IN QUANTITIES LARGER THAN 1,000 METRIC TONS PER YEAR

Category	Estimated 1974 production (metric tons)
Phosphorus-containing pesticides	
Methyl parathion	23,000
Malathion	14,000
Parathion	7,800
Diazinon®	5,500
Disulfoton	4,500
Phorate	4,500
Fensulfothion	2,700
DEF®	2,300
Guthion®	2,300
Dimethoate	1,400
Ethion	1,400
Naled	1,400
Ronnell	1,400
Nitrogen-containing pesticides	
Atrazine	50,000
Carbaryl	26,000
Captan	9,100
Simazine	6,800
BUX®	4,500
Carbofuran	4,500
Methomyl	4,500
Propazine	4,500
Folpet	1,400
Halogen-containing pesticides	
2,4-D	25,000
Dalapon	2,300
Silvex	2,300
Dicofol	1,800
Total 26 pesticides	214,900

Source: Kelso et al. (1976).

One rule of thumb may be applicable: from the label on the package determine the nature of the pesticide AI mixture and apply that procedure which is appropriate to the most toxic and/or most refractory materials contained in the package. In many cases, incineration may be the preferred method. Often the best procedure for the layperson would be to turn the pesticide into a collection agency, a county extension agent, or return to the manufacturer or distributor. Disposal must be considered on almost a case-by-case basis as noted by Lawless et al. (1975) because of the large number and variability of pesticide mixtures.

An appropriate research approach may be to contact the largest pesticide manufacturers and formulators to determine which specific finished formulations containing two or more AI's are their most widely sold products, obtain from them suggestions as to how best to dispose of small quantities of these pesticides and their containers, and then investigate these procedures--following the suggested general procedures outlined by Lawless et al. (1975) and Shih and Dal Porto (1975)--in order to reduce them to standard methods.

Alternately, the EPA may require the manufacturers and formulators to research and develop disposal procedures as part of the re-registration process.

Disposal of Large Quantities of Pesticides

Research and development focuses on three areas: incineration at sea, mobile disposal units, and fixed disposal units, including commercial incinerators.

Incineration at Sea--

The potential environmental and economic cost-benefits derivable from incineration at sea have been discussed in Section 4. Appropriate research and development activities for the EPA may be to continue the incineration at sea studies by leasing the facilities of the Vulcanus and/or Matthias III incinerator ship. This approach has an additional advantage because it is, in many cases, easier, safer, and more economical to transport an ocean-going incinerator facility to a point near the hazardous waste than to transport the waste to a regional, fixed incinerator unit. Movement of hazardous wastes across state boundaries has been a politically sensitive issue in recent years and will likely continue to be so.

The use of two incinerator ships is proposed to serve the coastal portions of the United States where most of the petrochemical complexes are situated. The need for two ships rather than one is based partly on the assumption that incinerator overhaul and maintenance and dry dock time may be a significant factor in overall operations and that there are inherent advantages in permanently stationing one ship on the West Coast and having one ship serve the East and Gulf Coasts. The service of the incinerator ships could be

made available to Canada and Mexico, thus increasing their potential utility. The latter point is an important one since Mexico will probably be developing oil fields and building refinery complexes on the Gulf of Mexico in the near future.

Mobile Disposal Units--

For the portions of the continental United States not bordering on the oceans, mobile disposal units may be feasible. Thus, we envision two to five mobile disposal units mounted on truck beds or rail-truck bed combinations circulating through the United States to dispose of hazardous wastes on a demand basis. This concept minimizes movement of hazardous wastes by bringing the disposal facility as near as possible to the waste and obviates trans-shipment across state boundaries.

The actual type of disposal device selected is open to further research, development, and testing. Options include: rotary kilns, fluidized beds, modified jet engine units (SUE® burner), molten salt baths, etc., and could include banks of microwave plasma destructors. Figures 11, 12, and 23 (previously given) illustrate various options.

Fixed Disposal Units--

The next alternative is to design, construct, and test fixed incinerators located in heavily industrialized or agricultural areas. The placement of these units should be to the advantage of the central agricultural portions of the United States and with consideration of the vast petrochemical complexes along the Gulf Coast. We envision a total of four fixed incineration units placed in the far West, the Plains States, the Gulf Coast, and the Eastern Seaboard.

An alternative research and development approach to fixed disposal units is to rely on existing commercial incinerator facilities to handle immediate and near-term pesticide disposal problems. Examples of two facilities are Chem-Trol Pollution Services, Model City, New York; and, Rollins Environmental Services, Inc., Bridgeport, New Jersey. Preliminary incinerator tests, including analytical protocol development for sampling and measurement, could be necessary to insure minimum environmental risk.

Movement of pesticides and other hazardous chemical wastes across state boundaries may be a problem as indicated earlier. The political overtones of frequent or even occassional trans-shipment of hazardous materials within the continental United States is a separate problem that must eventually be addressed by the EPA, but it is beyond the scope of the present report. Nevertheless, the concept of utilizing commercially available incinerators with appropriate testing and monitoring could be a cost-effective procedure with minimum environmental risk and a viable alternative to other more costly incineration research and development options.

Choice of Incinerator Types--

The choice of incinerator type or types for ocean, mobile, and fixed facilities is rather limited. Two incineration ships have already been constructed and successfully tested and operated. The performance data for disposal of chlorinated hydrocarbons for these two alternate systems are quite comparable. Thus, the selection of the final design need not be a long drawn out process and may hinge on projected operating and maintenance costs rather than technical and performance questions.

The concept of mobile and fixed disposal facilities need not introduce additional complications. In principle any of the following types of incinerators or disposal units may be made either mobile or fixed: rotary kiln, fluidized bed, modified jet engine, multiple chamber, and microwave plasma destructors.

We note the EPA/IERL, Edison, New Jersey, is designing a mobile rotary kiln (c.f. Figure 12). A fluidized bed incinerator may be an equally viable choice. A multiple hearth furnace (with or without rabble arms) may not be a good choice since refractory linings may crack and/or shake loose. Similarly, a mobile molten salt bath may suffer from the same problem. A modified jet engine burner may be a good choice for a mobile unit since it is relatively small, light weight, and does not require massive bulkheads or refractory linings. Banks of microwave plasma destructors may be feasible, but they probably would not be able to handle large amounts (multiple tonnage quantities) of chemical wastes.

Synopsis of New Directions for Pesticide Disposal Research--

We recognize that heavy emphasis has just been given to incineration procedures with the near exclusion of physical-chemical, biological, and land disposal methods for the disposal of large quantities of unwanted pesticides and other hazardous chemicals. The rationale for this position is simple: no technology other than incineration is ready for demonstration, as previously indicated in Table 26.

When, and if, alternate physical-chemical and biological disposal procedures have been demonstrated at the pilot plant level to offer technical, environmental, and/or economic cost advantages over incineration, then we presume one or more such facilities will be constructed or leased and utilized. The EPA can reasonably expect benefits from several alternate methods as the result of continued research and development, but only in the mid-to-long-range time interval; i.e., > 5 years. Over the next 5 years the need to attend to the immediate disposal of large quantities of unwanted pesticides and/or chemical wastes must rely on incineration.

REFERENCES

Billings, S. C. ed. Pesticide Handbook-Entoma 1975-1976. The Entomological Society of America, College Park, Maryland, 1975.

Federal Register. 39(85):15236-15241, May 1, 1974.

Kelso, G. L., R. R. Wilkinson, T. L. Ferguson, and J. D. Maloney, Jr. Development of Information on Pesticides Manufacturing For Source Assessment. Contract No. 68-02-1324, Task 43, U.S. Environmental Protection Agency Industrial Environmental Research Laboratory, Research Triangle Park, North Carolina, July 1976.

Lawless, E. W., T. L. Ferguson, and A. F. Meiners. Guidelines for the Disposal of Small Quantities of Unused Pesticides. U.S. EPA-670/2-74-057, June 1975.

Meier, E. P., M. C. Warner, W. H. Dennis, Jr., W. F. Randall, and T. A. Miller. Chemical Degradation of Military Standard Formulations of Organophosphate and Carbamate Pesticides. Technical Report No. 7611. U.S. Army Medical Bioengineering Research and Development Laboratory, Fort Detrick, Frederick, Maryland, AD A036051, Nov. 1976.

Münnecke, D., H. R. Day, and H. W. Trask. Review of Pesticide Disposal Research. Environmental Protection Agency Office of Solid Waste Management Programs Report SW-527, 1976.

Sanborn, J. R., B. M. Francis, and R. L. Metcalf. The Degradation of Selected Pesticides in Soil: A Review of the Published Literature. EPA-600/9-77-022. Aug. 1977.

Shih, C. C. and D. F. Dal Porto. Handbook for Pesticide Disposal by Common Chemical Methods. PB-252 864. Dec. 1975.

APPENDIX A

RECENT CONTRACTS FOR HAZARDOUS WASTE MATERIALS DISPOSAL RESEARCH

Appendix A contains a compilation of recent contracts approved by the EPA and other agencies and organizations to investigate new options for disposing of hazardous toxic wastes, including pesticides. The compilation presents the following information.

* Sponsor
* Contract number
* Project officer
* Contractor
* Contract value
* Time interval
* Principal investigator
* Title
* Objectives
* Other related information

EPA/IERL, Contract No. 68-03-2491, Dr. John Brugger[a/]
ATLANTIC RESEARCH CORPORATION (ARC) $65K, 2 years
Principal Investigator, Dr. Ralph Valentine. Start: June 1977.
Biodegradation of Hazardous Wastes by Pure Bacterial Cultures

Activated sludge processes are probably the cheapest method of disposal, but some wastes are not normally degraded. These wastes pass through the

a/ EPA/IERL, Oil and Hazardous Materials Spills Branch, Edison, New Jersey 08817.

treatment facility essentially unchanged and contribute to the total chemical oxygen demand (COD). Aerobic organisms have inherently faster metabolic rates than anerobic organisms. Gram negative bacteria, fungi, and yeast have been successful in disposing of pesticide and agricultural wastes. The ARC approach will be to find/develop the proper organism(s) to degrade hazardous waste materials (HWM) by exploiting pure or mixed pure cultures of bacteria. "Solubilization" of the HWM is important in order to have intimate contact between the organisms and the HWM.

ARC has been successful in degrading pentachlorophenol (PCP) at 700 ppm to around 350 to 420 ppm. In practice, PCP and its metabolites are monitored.

ARC is now working on hexachlorocyclopentadiene wastes. The proper matrix may be aqueous or mudlike material.

In any use of pure cultures or mixed pure cultures, there is concern over the survivability of the pure culture in the field. The problem of overgrowth by indigenous organisms is ever-present. Biodegradation by pure cultures may be an optional stage after activated sludge treatment.

EPA/IERL, Contract No. 68-03-2493, Dr. John Brugger
ATOMICS INTERNATIONAL, $150K, 2 YEARS
Principal Investigator, Dr. A. J. Darnell. Start: June 1977.
Oxidation/Bromination of Hazardous Waste Material by an Electrolytic Process

HWM, bromine, and water are combined at 300°C in a closed system to form carbon dioxide and hydrobromic acid. The overall reaction is

$$C,H + 5/2\ Br_2 + 2H_2O \xrightarrow{300^\circ C} CO_2 + 5HBr$$

(Hazardous Waste Material)

Sulfur and phosphorus-bearing compounds yield sulfates and phosphates which are collected as residues. Bromine is recovered from hydrobromic acid by electrolysis at 250°C.

Apparatus includes a stainless steel-tantalum reaction chamber. The chamber has individual entry ports for introduction of HWM, water, and recirculating dilute hydrobromic acid-bromine solution and exit ports for escape of gases and inorganic residue removal.

Applications include petroleum products and some pesticides. Wood scrap may be completely consumed in 30 to 60 min at 250°C. Experimental work was reported to indicate that chlorine-containing compounds yield HCl as a product, but compounds similar to Kepone® have not been studied. The applicability of the material to chlorinated organics must be viewed with reserve until adequately demonstrated.

Bromine consumption is significant and appears in the "ash" or inorganic residue. These bromine values may be recovered by treatment with dilute sulfuric acid.

EPA/IERL, Contract No. 68-03-2494, Dr. John Brugger
BATTELLE-PACIFIC NORTHWEST LABORATORIES, $45K, 9 MONTHS
Principal Investigator, Mr. Basil Mercer. Start: June 1977.
Methods and Materials Annotated Matrix

A paper study of techniques dealing with HWM spills. The study attempts to answer the following types of questions:

1. What are the major areas of concern in the environment?

2. What are the assessments of conventional methods of destruction of HWM spills?

3. How can specific examples of HWM spills be best handled, e.g., Kepone® in James River sediments and PCB's in Hudson River sediments.

The objective is to develop a matrix of methods of handling HWM spills.

EPA/IERL, Contract No. 68-03-2492, Dr. John Brugger
MINE SAFETY APPLIANCE RESEARCH, $70K, 2 YEARS
Principal Investigator, Mr. Ralph Hiltz. Start: June 1977.
Glass Encapsulation

When potassium superoxide and calcium carbide are mixed and heated in the presence of oxygen, an exothermic reaction occurs:

$$2KO_2 + CaC_2 + O_2 \xrightarrow[\Delta]{} K_2O + CaO + 2CO_2 + \text{heat}$$

If hazardous waste materials, $MgCO_3$, Al_2O_3, SiO_2, and B_2O_3 are also added to the above reactants, the heat of the reaction forms glass in situ, and the wastes are incorporated into the glass as it is formed.

Mixing problems as well as crazing or cracking of the final product may be significant. This method would also have a high energy requirement overall.

EPA/IERL, Contract No. 68-03-2492, Dr. John Brugger
MINE SAFETY APPLIANCE RESEARCH, $80K, 2 YEARS
Principal Investigator, Mr. Ralph Hiltz. Start: June 1977.
Molten Alkali Metal Reduction

When waste materials are placed in sodium metal (200 to 400°C) in an argon atmosphere, total reduction occurs. Various substances may be formed, e.g., nitrogen, hydrogen, arsine, phosphine, etc. Metals are "amalgamated."

The molten sodium system may be limited in application. Cleanup of the sodium after disposal of hazardous waste materials is required to remove sodium oxide, sodium hydroxide, and silicates. Chlorides, sulfates, and phosphates stay in solution. The waste must be dried first, otherwise the water will react with the molten sodium.

Considerable engineering skill will be required to build, operate, and maintain the system. Liquid sodium at 200°C circulates (by means of an electromagnetic pump) and flows into an expansion chamber which also serves as the entry point of the HWM below the surface of the liquid sodium. From the expansion chamber, the liquid sodium and wastes flow to a 316 stainless steel reactor where the temperature is raised to 400°C and final decomposition takes place. The decomposed wastes and liquid sodium flow to a "cold" trap maintained at 200°C where various sodium reaction products precipitate. A section of the "cold" trap may be removed for cleaning if the system becomes plugged by the insoluble reaction products.

Overall, this disposal method would have a fairly high energy requirement.

EPA/IERL, Contract No. 68-03-2559, Dr. Richard Dobbs[a/]
ITT RESEARCH INSTITUTE $70K, 1 YEAR
Principal Investigator, Dr. E. Foctman. Start: July 1977.
Treatment of Carcinogenic and Other Hazardous Organic Materials by Biological and Physical/Chemical Processes

Selected carcinogens (e.g., benzidine, naphthylamine, nitrosamines, etc.) are to be treated by various disposal options including ozonation/UV irradiation, activated carbon treatment, biodegradation, and other physical-chemical methods. The study may include two or three as yet unnamed pesticides.

a/ EPA/MERL, Wastewater Research Division, Physical and Chemical Treatment Section, Cincinnati, Ohio 45268.

APPENDIX B

PESTICIDES AND PESTICIDE CONTAINERS: REGULATIONS FOR ACCEPTANCE AND RECOMMENDED PROCEDURES FOR DISPOSAL AND STORAGE

Title 40—Protection of Environment

CHAPTER I—ENVIRONMENTAL PROTECTION AGENCY

PART 165—REGULATIONS FOR THE ACCEPTANCE OF CERTAIN PESTICIDES AND RECOMMENDED PROCEDURES FOR THE DISPOSAL AND STORAGE OF PESTICIDES AND PESTICIDES CONTAINERS

The previous Federal pesticide legislation, the Federal Insecticide, Fungicide, and Rodenticide Act of 1947 (7 U.S.C. 135 et seq.), known as FIFRA, did not address the problems of disposal or storage. However, the Federal Environmental Pesticide Control Act of 1972 (PL 92-516, 86 Stat. 973) alters and broadens FIFRA to provide for the first definitive control of pesticide, and pesticide container, disposal and storage. Under section 19(a) of the amended Act, the Administrator of the Environmental Protection Agency is required to "establish procedures and regulations for the disposal or storage of packages and containers of pesticides and for disposal or storage of excess amounts of such pesticides, and accept at convenient locations for safe disposal a pesticide the registration of which is canceled under section 6(c) if requested by the owner of the pesticide." The regulations for acceptance, and recommended procedures for disposal and storage, contained herein represent the Agency's first issuance in accordance with the provisions of section 19(a) of the new Act.

The potential seriousness of health and environmental hazards due to improper disposal and storage of pesticides and containers became increasingly clear in the late 1960's, as documented case studies accumulated. Expanding usage of pesticides in the United States (an estimated 665 million pounds in 1968) and increasing numbers of spent containers requiring disposal (240 million in 1968, up 50 percent over the number in 1963) indicated that these problems could be expected to increase. Since little was known of the extent of the problem, or of proper methods of disposal and storage, the Working Group on Pesticides, composed of experts from several Federal departments, was asked to study the subject. Their initial recommendations were published under the title "Summary of Interim Guidelines for Disposal of Surplus Waste Pesticides and Pesticide Containers." More recently, in 1972 a Task Force on Excess Chemicals, with representation from all parts of the Environmental Protection Agency, was formed to study disposal problems relating to pesticides and other hazardous chemicals, and to recommend solutions.

In drafting these regulations and recommended procedures the Agency drew heavily on the knowledge and information developed by these two groups, other Federal and State agencies and departments, and the private sector. Thus, these documents represent a broadly-based judgment regarding the pesticide and container disposal and storage requirements necessary to protect the environment. Compliance is achievable using available technology; however, facilities utilizing this technology are not readily available to the general public in all geographic areas at the present time.

Among the new features of the Act is the requirement that the Administrator of the Environmental Protection Agency accept at convenient locations for safe disposal a pesticide the registration of which is canceled under section 6(c) if requested by the owner of the pesticide. Section 6(c) of the new Act refers only to those pesticides the registrations of which have been canceled after first having been suspended to prevent imminent hazards during the time required for cancellation proceedings. The owner of such a pesticide is required to make a formal request in writing to the appropriate Regional Administrator; upon approval of the request, mutually convenient arrangements will be made for acceptance. Since pesticides finally canceled under section 6(c) are not subject to a grandfather clause, pesticides canceled under the FIFRA prior to October 21, 1972, will not qualify. Other canceled pesticides which do not qualify under the conditions set forth in section 6(c) of the new Act will not be accepted pursuant to section 19(a) of the new Act, and their safe storage or disposal is the responsibility of the owner.

The recommended disposal procedures apply to all pesticides and pesticide-related wastes, including those which are or may in the future be registered for general use or restricted use, or used under an experimental use permit. Additionally, they also apply to full containers, spent or used containers, and container residues. For packages and containers of pesticides intended for use in the home and garden or on farms and ranches when single containers are to be disposed of, the Agency does not require that disposal procedures be followed. Such disposal will have only minimal environmental impact and is preferable to concentrating these products and containers.

The storage criteria and procedures apply to all pesticides, pesticide-related wastes and contaminated containers which are classed as "highly toxic" or "moderately toxic," according to EPA's classification system for pesticides. The storage of pesticides and their containers which are in the mildly toxic category is judged not to present any undue hazards to public health or the environment and, therefore, is excluded from these criteria and procedures. The temporary storage of limited quantities of pesticides in the other categories, if undertaken at environmentally safe sites, is also excluded.

In considering disposal techniques, first preference should be given to procedures designed to recover some useful value from excess pesticides and containers. Where large quantities are involved, one of the first recommendations is that the excess material should be used for the purpose originally intended, provided this use is legal. Another alternative is to return the material to the manufacturer for potential reuse or reprocessing. A third alternative, in some cases, may be the export of the material to countries where its use is desired and legal.

Should these alternatives be inapplicable, the ultimate disposal method should be determined by the type of material. Organic pesticides which do not contain mercury, lead, cadmium, or arsenic may be disposed of by incineration at temperatures which will ensure complete destruction. Maximum volume reduction is achieved by incineration, and the incinerator emissions can be treated so that only relatively innocuous products are emitted. Incineration is not, however, applicable to those organic pesticides which contain heavy metals such as mercury, lead, cadmium, or arsenic, nor is it applicable to most inorganic pesticides or metallo-organic pesticides which have not been treated for removal of heavy metals.

If incineration is not applicable or available, disposal in specially designated landfills is suggested as an alternative. However, encapsulation prior to landfilling is recommended for certain materials such as those containing mercury, lead, cadmium, and arsenic, and inorganic compounds which are highly mobile in the soil. Encapsulation of these will retard mobility and contain them within a small area which can be permanently marked and recorded for future reference. Properly rinsed pesticide containers, however, may be reused or recycled as scrap or safely disposed of in a sanitary landfill; rinse liquids which cannot be used should be disposed of as if they were an excess pesticide. Among the disposal procedures not recommended are water dumping, open dumping, and open burning, except that open burning of small quantities of certain containers, and open field burial of single containers on farms and ranches by the pesticide user may be acceptable in some areas.

Other disposal processes, such as soil injection, well injection, and chemical degradation, may be acceptable in specific cases. At present, such methods have been neither sufficiently described nor classified to suggest their general use, and further study is necessary.

Storage sites and facilities should be located and constructed to prevent escape of pesticides and contaminated materials into the environment. Where practicable, provision for separate storage of different classifications of pesticides according to their chemical type, and for routine container inspection, should be considered. Special procedures should be followed in case fires or explosions occur where pesticides are stored.

A notice of proposed rulemaking and issuance of procedures was published in the FEDERAL REGISTER (40 CFR Part 165) on May 23, 1973. The Agency invited the submittal of comments by July 23, 1973. Sixty-two letters of comment were received and their suggestions were carefully considered. The several major issues raised, and the results of the Agency's consideration of them, follow.

The largest number of commenters questioned the appropriateness of the proposed 500 lb. exclusion from the recommended storage procedures, on the basis that there are variations in the

hazards of different pesticides. They pointed out that a few pounds of one kind can, in certain cases, represent a greater hazard than several thousand pounds of another kind. The Agency concluded that the 500 lb. exclusion was unrealistic and that the storage recommendations should be keyed to a rating system that would consider the overall hazard of the pesticide and would be readily apparent to even untrained personnel. It was decided to adopt the current EPA toxicity rating system for pesticide labeling. Under that system the following signal words are required on labels:

Category	*Signal words/symbol required on labels*
Highly toxic	DANGER, POISON, Skull and Crossbones.
Moderately toxic	WARNING.
Slightly toxic	CAUTION.

Pesticides in the first two classes, highly toxic and moderately toxic, and which have the corresponding signal words or symbol on the container label, will be covered by the recommended storage criteria and procedures. Other pesticides, including most of those registered for use in the home and garden, represent a lower degree of hazard, and will not be covered.

Several requests for temporary storage exemptions from the recommended storage criteria and procedures were made, for example, by commercial pesticide applicators operating in remote areas where availability or construction of recommended facilities is impractical. These requests were resolved in two ways. First, the hazard rating system for recommended storage procedures will exclude many of the pesticides normally used. Second, temporary storage for a single application's amount has been provided for at isolated and secured sites where the less stringent criteria and procedures will not increase the potential for environmental pollution.

The statement that "* * * these disposal procedures are mandatory only for the Agency * * *" caused the Environmental Defense Fund to question the appropriateness of the promulgation of disposal and storage recommended procedures instead of regulations, in view of the FIFRA as amended wording on this subject. However, adequate disposal sites and the necessary facilities are not readily available nationwide, and significant information gaps exist which make it infeasible to write specific criteria for certain disposal methods and procedures. Further, information on the full extent of environmental damages and of the economic impact of such regulations is lacking. Therefore, the Agency has retained the recommended procedures approach. At such time as this information has been obtained and analyzed, consideration will be given to proposing comprehensive regulations relative to storage and disposal.

The merit in the comments above derives from the potential for considerable environmental damage caused by acts such as water dumping, open dumping, open burning, inadequately controlled well injection, and storage next to food and feed. Consideration of these comments has led the Agency to begin drafting a new proposed rulemaking to prohibit or further constrain certain disposal and storage practices, and possibly to change procedures based on updated information as it becomes available. It is expected that this proposed rulemaking will be published in 1974.

Although section 12 of the new Act makes unlawful distribution, shipment or receiving for delivery of an unregistered or canceled pesticide, the Agency interprets section 19 as authorizing the movement of such pesticides for the specific purposes of disposal or storage.

Several commenters were concerned that there were no provisions for reuse or recycle as scrap of noncombustible containers. The recommended triple rinsing procedure will clean Group II containers sufficiently well so that insignificant contamination occurs when such containers are legally refilled with another pesticide belonging to the same chemical class. Triple rinsing also prepares containers for crushing or shredding and recycle as scrap. Provisions for this resource conservation step have been included in § 165.9(b), and specifically require that adequate rinsing be undertaken before such reuse or recycle.

Besides these major revisions, several minor wording changes were made which did not significantly change the direction or scope of the recommended procedures.

It is hoped that these regulations and recommended procedures will alert all Federal, State and local government agencies and private manufacturers, handlers, and users of pesticides to the need for proper disposal and storage of excess pesticides, pesticide containers and pesticide-related wastes. The United States Environmental Protection Agency will follow these recommended procedures in its own operations. Each office, laboratory or other facility of the Agency will conform strictly to these procedures in the disposal or storage of pesticides and their containers. State and local agencies are cautioned against adoption of these recommended procedures as regulations without careful study of the environmental and economic factors applicable to their own situations, including the availability of disposal sites and facilities.

These regulations and recommended procedures for disposal and storage of pesticides and pesticide containers are issued under the authority of sections 19(a) and 25(a) of the Federal Insecticide, Fungicide, and Rodenticide Act as amended by the Federal Environmental Pesticide Control Act of 1972 (86 Stat. 955, 977), and section 204 of the Solid Waste Disposal Act (P.L. 89-272, as amended by P.L. 91-512).

RUSSELL E. TRAIN,
Administrator.

APRIL 24, 1974.

Subpart A—General

Sec.
165.1 Definitions.
165.2 Authorization and scope.

Subpart B—Acceptance Regulations

165.3 Acceptable pesticides.
165.4 Request for acceptance.
165.5 Delivery.
165.6 Disposal.

Subpart C—Pesticides and Containers Recommended Procedures

165.7 Procedures not recommended.
165.8 Recommended procedures for the disposal of excess pesticides.
165.9 Recommended procedures for the disposal of pesticide containers and residues.
165.10 Recommended procedures and criteria for the storage of pesticides and pesticide containers.

Subpart D—Pesticide-Related Waste Recommended Procedures

165.11 Procedures for disposal and storage of pesticide-related waste.

AUTHORITY: Secs. 19(a) and 25(a) of the Federal Insecticide, Fungicide, and Rodenticide Act as amended by the Federal Environmental Pesticide Control Act of 1972 (86 Stat. 955, 977), and sec. 204 of the Solid Waste Disposal Act (Pub. L. 89-272 as amended by Pub. L. 91-512).

Subpart A—General

§ 165.1 Definitions.

As used in this part, all terms not defined herein shall have the meaning given them by the Act.

(a) "The Act" means the Federal Insecticide, Fungicide, and Rodenticide Act as amended by the Federal Environmental Pesticide Control Act of 1972 (Pub. L. 92-516, 86 Stat. 973).

(b) "Agency" means the U.S. Environmental Protection Agency.

(c) (1) "Administrator" means the Administrator of the Agency, or any officer or employee thereof to whom authority has been heretofore delegated or to whom authority may hereafter be delegated, to act in his stead.

(2) "Regional Administrator" means the Administrator of a Regional Office of the Agency or his delegatee.

(d) "Adequate storage" means placing of pesticides in proper containers and in safe areas as per § 165.10 as to minimize the possibility of escape which could result in unreasonable adverse effects on the environment.

(e) "Complete destruction" of pesticides means alteration by physical or chemical processes to inorganic forms.

(f) "Container" means any package, can, bottle, bag, barrel, drum, tank, or other containing-device (excluding spray applicator tanks) used to enclose a pesticide or pesticide-related waste.

(g) "Decontamination/detoxification" means processes which will convert pesticides into nontoxic compounds.

(h) "Degradation products" means those chemicals resulting from partial decomposition or chemical breakdown of pesticides.

(i) "Diluent" means the material added to a pesticide by the user or manufacturer to reduce the concentration of active ingredient in the mixture.

(j) "Encapsulate" means to seal a pesticide, and its container if appropriate, in an impervious container made of plastic, glass, or other suitable material which will not be chemically degraded by the contents. This container then should be sealed within a durable container made from steel, plastic, concrete, or other suitable material of sufficient thickness and strength to resist physical damage during and subsequent to burial or storage.

(k) "Heavy metals" means metallic elements of higher atomic weights, including but not limited to arsenic, cadmium, copper, lead, mercury, manganese, zinc, chromium, tin, thallium, and selenium.

(l) "Imminent hazard" means a situation which exists when the continued use of a pesticide during the time required for cancellation proceedings would be likely to result in unreasonable adverse effects on the environment or will involve unreasonable hazard to the survival of a species declared endangered by the Secretary of the Interior under Public Law 91-135.

(m) "Ocean dumping" means the disposal of pesticides in or on the oceans and seas, as defined in P. L. 92-532.

(n) "Open burning" means the combustion of a pesticide or pesticide container in any fashion other than incineration.

(o) "Open dumping" means the placing of pesticides or containers in a land site in a manner which does not protect the environment and is exposed to the elements, vectors, and scavengers.

(p) "Pesticide" means (1) any substance or mixture of substances intended for preventing, destroying, repelling, or mitigating any pest, or (2) any substance or mixture of substances intended for use as a plant regulator, defoliant, or desiccant.

(1) "Excess pesticides" means all pesticides which cannot be legally sold pursuant to the Act or which are to be discarded.

(2) "Organic pesticides" means carbon-containing substances used as pesticides, excluding metallo-organic compounds.

(3) "Inorganic pesticides" means non-carbon-containing substances used as pesticides.

(4) "Metallo-organic pesticides" means a class of organic pesticides containing one or more metal or metalloid atoms in the structure.

(q) "Pesticide-related wastes" means all pesticide-containing wastes or by-products which are produced in the manufacturing or processing of a pesticide and which are to be discarded, but which, pursuant to acceptable pesticide manufacturing or processing operations, are not ordinarily a part of or contained within an industrial waste stream discharged into a sewer or the waters of a state.

(r) "Pesticide incinerator" means any installation capable of the controlled combustion of pesticides, at a temperature of 1000°C (1832°F) for two seconds dwell time in the combustion zone, or lower temperatures and related dwell times that will assure complete conversion of the specific pesticide to inorganic gases and solid ash residues. Such installation complies with the Agency Guidelines for the Thermal Processing of Solid Wastes as prescribed in 40 CFR Part 240.

(s) "Safe disposal" means discarding pesticides or containers in a permanent manner so as to comply with these proposed procedures and so as to avoid unreasonable adverse effects on the environment.

(t) "Sanitary landfill" means a disposal facility employing an engineered method of disposing of solid wastes on land in a manner which minimizes environmental hazards by spreading the solid wastes in thin layers, compacting the solid wastes to the smallest practical volume, and applying cover material at the end of each working day. Such facility complies with the Agency Guidelines for the Land Disposal of Solid Wastes as prescribed in 40 CFR Part 241.

(u) "Scrubbing" means the washing of impurities from any process gas stream.

(v) "Soil injection" means the emplacement of pesticides by ordinary tillage practices within the plow layer of a soil.

(w) "Specially designated landfill" means a landfill at which complete long term protection is provided for the quality of surface and subsurface waters from pesticides, pesticide containers, and pesticide-related wastes deposited therein, and against hazard to public health and the environment. Such sites should be located and engineered to avoid direct hydraulic continuity with surface and subsurface waters, and any leachate or subsurface flow into the disposal area should be contained within the site unless treatment is provided. Monitoring wells should be established and a sampling and analysis program conducted. The location of the disposal site should be permanently recorded in the appropriate local office of legal jurisdiction. Such facility complies with the Agency Guidelines for the Land Disposal of Solid Wastes as prescribed in 40 CFR Part 241.

(x) "Triple rinse" means the flushing of containers three times, each time using a volume of the normal diluent equal to approximately ten percent of the container's capacity, and adding the rinse liquid to the spray mixture or disposing of it by a method prescribed for disposing of the pesticide.

(y) "Unreclaimable residues" means residual materials of little or no value remaining after incineration.

(z) "Water dumping" means the disposal of pesticides in or on lakes, ponds, rivers, sewers, or other water systems as defined in P. L. 92-500.

(aa) "Well injection" means disposal of liquid wastes through a hole or shaft to a subsurface stratum.

§ 165.2 Authorization and scope.

(a) The regulations in this part and recommended procedures are published pursuant to sections 19(a) and 25(a) of the Act, which give the Administrator the authority to establish regulations and procedures for the disposal or storage of packages and containers of pesticides, and for disposal or storage of excess amounts of such pesticides, and require the Administrator to accept for safe disposal a pesticide the registration of which is canceled under section 6(c) of the Act if requested by the owner of the pesticide. Section 165.11 of these recommended procedures (Pesticide-Related Wastes) is published pursuant to Section 204 of the Solid Waste Disposal Act (P.L. 89-272 as amended by P.L. 91-512) which authorizes the Administrator to make information available and to make recommendations concerning the disposal and handling of wastes.

(b) Regulations for acceptance for safe disposal of pesticides canceled under section 6(c) and recommended proceprocedures for disposal or storage of pesticides, pesticide containers, and pesticide-related wastes are those which the Administrator judges as necessary, with an adequate margin of safety, to protect public health and the environment. Such procedures are subject to addition and revision as the Administrator deems necessary.

(c) The recommended procedures for the disposal of pesticides and pesticide containers apply to all pesticides, pesticide-related wastes (and their containers) including those which are or may in the future be registered for general use or restricted use, or covered under an experimental use permit, except those single containers discussed in paragraph (e), of this section. These disposal procedures are mandatory only for the Agency in carrying out its pesticide and container disposal operations.

(d) The recommended procedures and criteria for the storage of pesticides and pesticide containers apply to all pesticides and excess pesticides and to used empty containers and containers which contain pesticides. These procedures and criteria apply to sites and facilities where pesticides that are classed as highly toxic or moderately toxic, and bear the signal words DANGER, POISON, or WARNING, or the skull and crossbones symbol, on the label are stored. Pesticides covered by an experimental use permit should also be stored in accordance with these procedures. These storage procedures are mandatory only for the Agency in carrying out its pesticide and container storage operations. Temporary storage by the user of the quantity of pesticide needed for a single application may be undertaken in isolated areas in accordance with the procedures and criteria given in § 165.10(a).

(e) Recommended pesticide and pesticide container disposal procedures shall not apply to containers of pesticides registered for use in the home and garden if securely wrapped in several layers of paper and disposed of singly during routine municipal solid waste disposal, nor to containers of pesticides used on farms and ranches where disposal by open-field burial of single containers is undertaken

with due regard to the protection of surface and sub-surface waters.

(f) As a general guideline, the owner of excess pesticides should first exhaust the two following avenues before undertaking final disposal:

(1) Use for the purposes originally intended, at the prescribed dosage rates, providing these are currently legal under all Federal, State, and local laws and regulations.

(2) Return to the manufacturer or distributor for potential re-labelling, recovery of resources, or reprocessing into other materials. Transportation must be in accordance with all currently applicable U.S. Department of Transportation regulations, including those prescribed in 49 CFR Parts 170–179 and 397, 46 CFR Part 146, and 14 CFR Part 103. The "for hire" transportation of unregistered pesticides across state lines may be subject to the Interstate Commerce Commission's economic regulations (49 U.S.C. 1 et seq. for rail carriers; 306, 307, and 309 for motor carriers; and 909 for domestic water carriers), and the Commission should be contacted in case of doubt.

NOTE: Some excess pesticides may be suitable for export to a country where use of the pesticide is legal. All pesticides so exported should be in good condition and packed according to specifications of the foreign purchaser, and must be transported to the port of embarkation in accordance with all Department of Transportation regulations. All shipments should be in conformance with section 17(a) of the Act.

(g) To provide documentation of actual situations, all accidents or incidents involving the storage or disposal of pesticides, pesticide containers, or pesticide-related wastes should be reported to the appropriate Regional Administrator.

Subpart B—Acceptance Regulations

§ 165.3 Acceptable pesticides.

The Administrator will accept for safe disposal those pesticides the registrations of which have been canceled, after first having been suspended to prevent an imminent hazard during the time required for cancellation proceedings as specified in section 6(c) of the Act. However, no other pesticides will be accepted pursuant to section 19(a) of the Act, and nothing herein shall obligate the Federal Government to own or operate any disposal facility.

§ 165.4 Request for acceptance.

(a) Before the owner of such a pesticide requests acceptance by the Administrator for disposal, he shall make every reasonable effort to return the material to either its manufacturer, distributor, or to another agent capable of using the material.

(b) If such an effort is unsuccessful, the following procedure shall be used by the owner of a suspended pesticide to request acceptance by the Administrator:

(1) The owner of such a pesticide must make a formal request for acceptance, in writing, to the Regional Administrator for the area where such pesticides are located.

(2) Records and data pertaining to the amount, location, physical form, type and condition of containers, and date of manufacture or purchase of individual lots must be submitted. Certification that the owner of the suspended pesticide has made every reasonable effort to return the material to the manufacturer, distributor of the pesticide, or to other agents capable of re-labeling, recovering, recycling or reprocessing the material and has been refused on the basis of technological infeasibility, must also be submitted.

§ 165.5 Delivery.

If it is found that a canceled pesticide meets the requirements for acceptance, the Regional Administrator will confer with the owner for purposes of arranging a mutually convenient location for acceptance of individual lots of such canceled pesticides. Transportation to the acceptance location will be the responsibility of, and transportation costs will be borne by, the owner of the pesticide.

§ 165.6 Disposal.

Following such acceptance, the Regional Administrator will cause the disposal or storage of such pesticide as appropriate, in accordance with the procedures outlined in subparts A and C of this part.

Subpart C—Pesticides and Containers

§ 165.7 Procedures not recommended.

No person should dispose of or store (or receive for disposal or storage) any pesticide or dispose of or store any pesticide container or pesticide container residue:

(a) In a manner inconsistent with its label or labeling.

(b) So as to cause or allow open dumping of pesticides or pesticide containers.

(c) So as to cause or allow open burning of pesticides or pesticide containers; except, the open burning by the user of small quantities of combustible containers formerly containing organic or metallo-organic pesticides, except organic mercury, lead, cadmium, or arsenic compounds, is acceptable when allowed by State and local regulations.

(d) So as to cause or allow water dumping or ocean dumping, except in conformance with regulations developed pursuant to the National Marine Protection, Research and Sanctuaries Act of 1972 (Pub. L. 92–532), and to Sections 304, 307, and 311 of the Federal Water Pollution Control Act as Amended (Pub. L. 92–500).

(e) So as to violate any applicable Federal or State pollution control standard.

(f) So as to violate any applicable provisions of the Act.

§ 165.8 Recommended procedures for the disposal of pesticides.

Recommended procedures for the disposal of pesticides are given below:

(a) Organic pesticides, (except organic mercury, lead, cadmium, and arsenic compounds which are discussed in paragraph (c) of this section) should be disposed of according to the following procedures:

(1) Incinerate in a pesticide incinerator at the specified temperature/dwell time combination, or at such other lower temperature and related dwell time that will cause complete destruction of the pesticide. As a minimum it should be verified that all emissions meet the requirements of the Clean Air Act of 1970 (42 U.S.C. 1857 et seq.) relating to gaseous emissions: specifically any performance regulations and standards promulgated under sections 111 and 112 should be adhered to. Any liquids, sludges, or solid residues generated should be disposed of in accordance with all applicable Federal, State, and local pollution control requirements. Municipal solid waste incinerators may be used to incinerate excess pesticides or pesticide containers provided they meet the criteria of a pesticide incinerator and precautions are taken to ensure proper operation.

(2) If appropriate incineration facilities are not available, organic pesticides may be disposed of by burial in a specially designated landfill. Records to locate such buried pesticides within the landfill site should be maintained.

(3) The environmental impact of the soil injection method of pesticide disposal has not been clearly defined nationally, and therefore this disposal method should be undertaken only with specific guidance. It is recommended that advice be requested from the Regional Administrator in the region where the material will be disposed of prior to undertaking such disposal by this method.

(4) There are chemical methods and procedures which will degrade some pesticides to forms which are not hazardous to the environment. However, practical methods are not available for all groups of pesticides. Until a list of such methods is available, it is recommended that advice be requested from the Regional Administrator in the region where the material will be disposed of prior to undertaking disposal by such method.

(5) If adequate incineration facilities, specially designated landfill facilities, or other approved procedures are not available, temporary storage of pesticides for disposal should be undertaken. Storage facilities, management procedures, safety precautions and fire and explosion control procedures should conform to those set forth in § 165.10.

(6) The effects of subsurface emplacement of liquid by well injection and the fate of injection materials are uncertain with available knowledge, and could result in serious environmental damage requiring complex and costly solutions on a long-term basis. Well injection should not be considered for pesticide disposal unless all reasonable alternative measures have been explored and found less satisfactory in terms of environmental protection. As noted in the Administrator's Decision Statement No. 5, dated February 6, 1973, the Agency's policy is to oppose well injection of fluid pesticides

"without strict controls and a clear demonstration that such emplacement will not interfere with present or potential use of the subsurface environment, contaminate ground water resources or otherwise damage the environment." Adequate pre-injection tests, provisions for monitoring the operation and the environmental effects, contingency plans to cope with well failures, and provisions for plugging injection wells when abandoned should be made. The Regional Administrator should be advised of each operation.

(b) Metallo-organic pesticides (except organic mercury, lead, cadmium, or arsenic compounds which are discussed in paragraph (c) of this section), should be disposed of according to the following procedures:

(1) After first subjecting such compounds to an appropriate chemical or physical treatment to recover the heavy metals from the hydrocarbon structure, incinearate in a pesticide incinerator as described in paragraph (a)(1) of this section.

(2) If appropriate treatment and incineration are not available, bury in a specially designated landfill as noted in paragraph (a)(2) of this section.

(3) Disposal by soil injection of metallo-organic pesticides should be undertaken only in accordance with the procedure set forth in paragraph (a)(3) of this section.

(4) Chemical degradation methods and procedures that can be demonstrated to provide safety to public health and the environment should be undertaken only as noted in paragraph (a)(4) of this section.

(5) If adequate disposal methods as listed above in this section are not available, the pesticides should be stored according to the procedures in § 165.10 until disposal facilities become available.

(6) Well injection of metallo-organic pesticides should be undertaken only in accordance with the procedures set forth in paragraph 165.8(a)(6) of this section.

(c) Organic mercury, lead, cadmium, arsenic, and all inorganic pesticides should be disposed of according to the following procedures:

(1) Chemically deactivate the pesticides by conversion to non-hazardous compounds, and recover the heavy metal resources. Methods that are appropriate will be described and classified according to their applicability to the different groups of pesticides. Until a list of practical methods is available, however, each use of such procedures should be undertaken only as noted in paragraph 165.8 (a)(4) of this section.

(2) If chemical deactivation facilities are not available, such pesticides should be encapsulated and buried in a specially designated landfill. Records sufficient to permit location for retrieval should be maintained.

(3) If none of the above options is available, place in suitable containers (if necessary) and provide temporary storage until such time as adequate disposal facilities or procedures are available. The general criteria for acceptable storage are noted in § 165.10.

§ 165.9 Recommended procedures for the disposal of pesticide containers and residues.

(a) *Group I Containers.* Combustible containers which formerly contained organic or metallo-organic pesticides, except organic mercury, lead, cadmium, or arsenic compounds, should be disposed of in a pesticide incinerator, or buried in a specially designated landfill, as noted in § 165.8(a); except that small quantities of such containers may be burned in open fields by the user of the pesticide when such open burning is permitted by State and local regulations, or buried singly by the user in open fields with due regard for protection of surface and sub-surface water.

(b) *Group II Containers.* Non-combustible containers which formerly contained organic or metallo-organic pesticides, except organic mercury, lead, cadmium, or arsenic compounds, should first be triple-rinsed. Containers in good condition may then be returned to the pesticide manufacturer or formulator, or drum reconditioner for reuse with the same chemical class of pesticide previously contained providing such reuse is legal under currently applicable U.S. Department of Transportation regulations including those set forth in 49 CFR 173.28. Other rinsed metal containers should be punctured to facilitate drainage prior to transport to a facility for recycle as scrap metal or for disposal. All rinsed containers may be crushed and disposed of by burial in a sanitary landfill, in conformance with State and local standards or buried in the field by the user of the pesticide. Unrinsed containers should be disposed of in a specially designated landfill, or subjected to incineration in a pesticide incinerator.

(c) *Group III Containers.* Containers (both combustible and noncombustible) which formerly contained organic mercury, lead, cadmium, or arsenic or inorganic pesticides and which have been triple-rinsed and punctured to facilitate drainage, may be disposed of in a sanitary landfill. Such containers which are not rinsed should be encapsulated and buried in a specially designated landfill.

(d) *Residue disposal.* Residues and rinse liquids should be added to spray mixtures in the field. If not, they should be disposed of in the manner prescribed for each specific type of pesticide as set forth in § 165.8.

§ 165.10 Recommended procedures and criteria for storage of pesticides and pesticide containers.

(a) *General.* (1) Pesticides and excess pesticides and their containers whose uncontrolled release into the environment would cause unreasonable adverse effects on the environment should be stored only in facilities where due regard has been given to the hazardous nature of the pesticide, site selection, protective enclosures, and operating procedures, and where adequate measures are taken to assure personal safety, accident prevention, and detection of potential environmental damages. These storage procedures and criteria should be observed at sites and facilities where pesticides and excess pesticides (and their containers) that are classed as highly toxic or moderately toxic and are required to bear the signal words DANGER, POISON, or WARNING, or the skull and crossbones symbol on the label are stored. These procedures and criteria are not necessary at facilities where most pesticides registered for use in the home and garden, or pesticides classed as slightly toxic (word CAUTION on the label) are stored. All facilities where pesticides which are or may in the future be covered by an experimental use permit or other special permit are stored should be in conformance with these procedures and criteria.

(2) Temporary storage of highly toxic or moderately toxic pesticides for the period immediately prior to, and of the quantity required for a single application, may be undertaken by the user at isolated sites and facilities where flooding is unlikely, where provisions are made to prevent unauthorized entry, and where separation from water systems and buildings is sufficient to prevent contamination by runoff, percolation, or wind-blown particles or vapors.

(b) *Storage sites.* Storage sites should be selected with due regard to the amount, toxicity, and environmental hazard of pesticides, and the number and sizes of containers to be handled. When practicable, sites should be located where flooding is unlikely and where soil texture/structure and geologic/hydrologic characteristics will prevent the contamination of any water system by runoff or percolation. Where warranted, drainage from the site should be contained (by natural or artificial barriers or dikes), monitored, and if contaminated, disposed of as an excess pesticide as discussed in § 165.8. Consideration should also be given to containing wind-blown pesticide dusts or particles.

(c) *Storage facilities.* Pesticides should be stored in a dry, well ventilated, separate room, building or covered area where fire protection is provided. Where relevant and practicable, the following precautions should be taken:

(1) The entire storage facility should be secured by a climb-proof fence, and doors and gates should be kept locked to prevent unauthorized entry.

(2) Identification signs should be placed on rooms, buildings, and fences to advise of the contents and warn of their hazardous nature, in accordance with suggestions given in paragraph (g)(1)(i) of this section.

(3) All items of movable equipment used for handling pesticides at the storage site which might be used for other purposes should be labeled "contaminated with pesticides" and should not be removed from the site unless thoroughly decontaminated.

(4) Provision should be made for decontamination of personnel and equipment such as delivery trucks, tarpaulin covers, etc. Where feasible, a wash basin, and shower with a delayed-closing pull

chain valve should be provided. All contaminated water should be disposed of as an excess pesticide. Where required, decontamination area should be paved or lined with impervious materials, and should include gutters. Contaminated runoff should be collected, and treated as an excess pesticide.

(d) *Operational procedures.* Pesticide containers should be stored with the label plainly visible. If containers are not in good condition when received, the contents should be placed in a suitable container and properly relabeled. If dry excess pesticides are received in paper bags that are damaged, the bag and the contents should be placed in a sound container that can be sealed. Metal or rigid plastic containers should be checked carefully to insure that the lids and bungs are tight. Where relevant and practicable, the following provisions should be considered:

(1) *Classification and separation.* (i) Each pesticide formulation should be segregated and stored under a sign containing the name of the formulation. Rigid containers should be stored in an upright position and all containers should be stored off the ground, in an orderly way, so as to permit ready access and inspection. They should be accumulated in rows or units so that all labels are visible, and with lanes to provide effective access. A complete inventory should be maintained indicating the number and identity of containers in each storage unit.

(ii) Excess pesticides and containers should be further segregated according to the method of disposal to ensure that entire shipments of the same class of pesticides are disposed of properly, and that accidental mixing of containers of different categories does not occur during the removal operation.

(2) *Container inspection and maintenance.* Containers should be checked regularly for corrosion and leaks. If such is found, the container should be transferred to a sound, suitable, larger container and be properly labeled. Materials such as adsorptive clay, hydrated lime, and sodium hypochlorite should be kept on hand for use as appropriate for the emergency treatment or detoxification of spills or leaks. (Specific information relating to other spill treatment procedures and materials will be published as it is confirmed.)

(e) *Safety precautions.* In addition to precautions specified on the label and in the labeling, rules for personal safety and accident prevention similar to those listed below should be available in areas where personnel congregate:

(1) *Accident prevention measures.* (i) Inspect all containers of pesticides for leaks before handling them.

(ii) Do not mishandle containers and thereby create emergencies by carelessness.

(iii) Do not permit unauthorized persons in the storage area.

(iv) Do not store pesticides next to food or feed or other articles intended for consumption by humans or animals.

(v) Inspect all vehicles prior to departure, and treat those found to be contaminated.

(2) *Safety measures.* (i) Do not store food, beverages, tobacco, eating utensils, or smoking equipment in the storage or loading areas.

(ii) Do not drink, eat food, smoke, or use tobacco in areas where pesticides are present.

(iii) Wear rubber gloves while handling containers of pesticides.

(iv) Do not put fingers in mouth or rub eyes while working.

(v) Wash hands before eating, smoking, or using toilet and immediately after loading, or transferring pesticides.

(vi) Persons working regularly with organophosphate and N-alkyl carbamate pesticides should have periodic physical examinations, including cholinesterase tests.

(f) *Protective clothing and respirators.* (1) When handling pesticides which are in concentrated form, protective clothing should be worn. Contaminated garments should be removed immediately, and extra sets of clean clothing should be maintained nearby.

(2) Particular care should be taken when handling certain pesticides to protect against absorption through skin, and inhalation of fumes. Respirators or gas masks with proper canisters approved for the particular type of exposure noted in the label directions, should be used when such pesticides are handled.

(g) *Fire control.* (1) Where large quantities of pesticides are stored, or where conditions may otherwise warrant, the owner of stored pesticides should inform the local fire department, hospitals, public health officials, and police department in writing of the hazards that such pesticides may present in the event of a fire. A floor plan of the storage area indicating where different pesticide classifications are regularly stored should be provided to the fire department. The fire chief should be furnished with the home telephone numbers of (i) the person(s) responsible for the pesticide storage facility, (ii) the appropriate Regional Administrator, who can summon the appropriate Agency emergency response team, (iii) the U.S. Coast Guard, and (iv) the Pesticide Safety Team Network of the National Agricultural Chemicals Association.

(2) *Suggestions for Fire Hazard Abatement.* (i) Where applicable, plainly label the outside of each storage area with "DANGER," "POISON," "PESTICIDE STORAGE" signs. Consult with the local fire department regarding the use of the current hazard signal system of the National Fire Protection Association.

(ii) Post a list on the outside of the storage area of the types of chemicals stored therein. The list should be updated to reflect changes in types stored.

(3) *Suggested Fire Fighting Precautions.* (i) Wear air-supplied breathing apparatus and rubber clothing.

(ii) Avoid breathing or otherwise contacting toxic smoke and fumes.

(iii) Wash completely as soon as possible after encountering smoke and fumes.

(iv) Contain the water used in fire fighting within the storage site drainage system.

(v) Fireman should take cholinesterase tests after fighting a fire involving organophosphate or N-alkyl carbamate pesticides, if they have been heavily exposed to the smoke. Baseline cholinesterase tests should be part of the regular physical examination for such firemen.

(vi) Evacuate persons near such fires who may come in contact with smoke or fumes or contaminated surfaces.

(h) *Monitoring.* An environmental monitoring system should be considered in the vicinity of storage facilites. Samples from the surroundng ground and surface water, wildlife, and plant environment, as appropriate, should be tested in a regular program to assure minimal environmental insult. Analyses should be performed according to "Official Methods of the Association of Official Analytical Chemists (AOAC)," and such other methods and procedures as may be suitable.

Subpart D—Pesticide-Related Wastes

§ 165.11 Procedures for disposal and storage of pesticide-related wastes.

(a) In general all pesticide-related wastes should be disposed of as excess pesticides in accordance with the procedures set forth in §§ 165.7 and 165.8. Such wastes should not be disposed of by addition to an industrial effluent stream if not ordinarily a part of or contained within such industrial effluent stream, except as regulated by and in compliance with effluent standards established pursuant to sections 304 and 307 of the Federal Water Pollution Control Act as amended.

(b) Pesticide-related wastes which are to be stored should be managed in accordance with the provisions of § 165.10.

[FR Doc.74-9911 Filed 4-30-74;8:45 am]

APPENDIX C

SITE VISITS RELATED TO HAZARDOUS AND TOXIC MATERIAL DISPOSAL

Appendix C lists sites visited by R. R. Wilkinson and F. C. Hopkins to gather information on hazardous and toxic material disposal technology and research. The compilation presents the following information:

* Site visited (company, location)

* Date of visit

* Person(s) interviewed

* Technology discussed

* Application to pesticides or other hazardous waste material

1. Atomics International Division
   Rockwell International
   8900 DeSoto Road
   Canoga Park, California
   213-341-1000
   September 28, 1977
   Dr. Sam Yosim, Chemist
   Dr. Al J. Darnell, Chemist
   Mr. Russell B. Hunter, Marketing Representative
   Molten salt bath
   Pesticide incineration

2. Combustion Power Company, Inc.
   Subsidiary of Weyerhaeuser Company
   1346 Willow Road
   Menlo Park, California
   415-324-4744
   September 30, 1977
   Mr. Dale Moody, Senior Project Engineer
   Fluidized bed incinerators
   Herbicide Orange incineration

3. Envirotech Corporation
EIMCO BSP Division
One Davis Drive
Belmont, California
415-592-4060
September 29, 1977
Mr. Sid Howard, Marketing Manager
Mr. John Gibbs, Group Product Manager
Multiple hearth furnaces
Incineration of PCB's, DDT and 2,4,5-T

4. Iowa State University
Horticultural Research Station
Ames, Iowa
515-294-2751
July 5, 1977
Dr. Charles Hall, Project Leader
Mr. Loras Freiburger, Research Technician
Disposal pit technology
Pesticide biodegradation

5. Lockheed Palo Alto Research Laboratory
3251 Hanover Street
Palo Alto, California
415-493-4411
September 29, 1977
Dr. Lionel Bailin, Chemist
Dr. Barry Hertzler, Chemist
Dr. Ernest Littauer, Manager Chemistry Section
Microwave plasma destruction unit
Destruction of pesticides and other hazardous materials

6. The Marquardt Company
1655 Saticoy Street
Van Nuys, California
213-781-2121
September 27, 1977
Mr. Robert Babbitt, Manager Process Engineering
SUE® modified jet engine combustion unit
DDT and Herbicide Orange incineration

7. MB Associates, Inc.
Bollinger Canyon Road
San Ramon, California
415-837-7201
September 30, 1977
Mr. Ray Tenzer, Combustion Engineer

Mr. Ben Ford, Combustion Engineer
Rotary kilns
Incineration of oil and other hazardous waste materials

8. Oak Ridge National Laboratory
Oak Ridge, Tennessee
615-483-8611
October 11, 1977
Dr. Charles Scott, Associate Director Chemical Technology Division
Dr. W. W. Pitt, Jr., Manager Biotechnology and Environmental and Groups Leader, Environmental Monitoring
Dr. S. E. Shumate II, Group Leader Bioengineering R&D
Mr. Charles W. Hancher, Group Leader, Bioprocess Engineer
Fluidized bed bacteriological reactor
Bacterial degradation of hazardous wastes

9. SCS Engineers, Inc.
4014 Long Beach Boulevard
Long Beach, California
213-426-9544
September 28, 1977
Dr. Tan Phung, Chemical Engineer
Dr. Warren Hansen, Chemical Engineer
Dr. David Ross, Chemical Engineer
Soil cultivation techniques as applied to pesticides and other hazardous materials