PB97-963131
EPA/541/R-97/106
January 1998

EPA Superfund
Record of Decision Amendment:

Preferred Plating Corp.
Farmingdale, NY
9/30/1997

RECORD OF DECISION AMENDMENT

Preferred Plating Corporation

Farmingdale, Suffolk County, New York

UNITED STATES ENVIRONMENTAL PROTECTION AGENCY

REGION II

NEW YORK, NEW YORK

DECLARATION STATEMENT

RECORD OF DECISION AMENDMENT

SITE NAME AND LOCATION

Preferred Plating Corporation
Farmingdale, Suffolk County, New York

STATEMENT OF BASIS AND PURPOSE

This decision document presents the selected modification to the original remedial action for the first operable unit of the Preferred Plating Corporation site (Site), located in Farmingdale, New York. The original remedial action was selected in the Operable Unit 1 (OU1) Record of Decision (ROD) issued by the United States Environmental Protection Agency (EPA) on September 22, 1989.

The modification to the original OU1 remedy was chosen in accordance with the requirements of the Comprehensive Environmental Response, Compensation, and Liability Act (CERCLA) of 1980, as amended, 42 U.S.C. § 9601 et seq., and to the extent practicable, the National Oil and Hazardous Substances Pollution Contingency Plan (NCP), 40 C.F.R. Part 300. This decision document explains the fundamental changes to the OU1 remedy previously selected for the Site.

The New York State Department of Environmental Conservation (NYSDEC) concurs with the modification to the selected OU1 remedy. See attached letter (Appendix I). The information supporting this remedial action decision is contained in the administrative record for the Site. The index for the administrative record is attached to this document (Appendix II).

DESCRIPTION OF MODIFICATION TO THE SELECTED REMEDY

The modification to the OU1 remedy reassesses the need for a pump and treat system to address groundwater contaminated with cadmium, chromium, and chlorinated organics. This operable unit, one of three phases of remedial activity for the Site, addresses contaminated groundwater underlying the Site. The second operable unit addressed contaminated sediments and soils in underground leaching pits located on the former PPC property; the excavation and off-site disposal of these materials were completed in June 1994. The third operable unit

investigated a potential upgradient source of groundwater contamination which resulted in a September 1993 ROD to take no further action.

The major components of the modification to the selected remedy include:

- Elimination of the groundwater extraction and treatment system portion of the 1989 selected remedy, and

- Implementation of an annual groundwater monitoring program to ensure that the remedy remains protective of human health and the environment.

EXPLANATION OF FUNDAMENTAL CHANGES

This ROD Amendment describes fundamental changes to the September 1989 OU1 ROD issued by EPA for the Site and which was concurred on by NYSDEC.

The remedy specified in the 1989 OU1 ROD included the remediation of the underlying aquifer through extraction and treatment of groundwater contaminated with heavy metals and chlorinated organics, followed by reinjection of the treated water. The aquifer was to be remediated to federal and state drinking water standards.

The levels of contamination observed in the aquifer in 1989 have declined significantly. Presently, only cadmium still exists above its federal and state drinking water standard. Therefore, because of the change in Site conditions, the extraction and treatment system is no longer necessary to ensure the protection of public health and the environment.

The modified remedy will rely on natural attenuation to continue to reduce contaminant levels, particularly cadmium, in the groundwater. The aquifer will be monitored on an annual basis to evaluate the continued effectiveness of the natural attenuation processes.

DECLARATION STATEMENT

This modification to the selected OU1 remedy is protective of human health and the environment, complies with federal and state requirements that are legally applicable or relevant and appropriate to the remedial action, and is cost-effective. This modified remedy

utilizes permanent solutions and alternative treatment technologies to the maximum extent practicable for the Site.

Because the selected remedy will result in hazardous substances remaining on the Site above health-based levels, a review will be conducted within five years after issuance of this ROD Amendment to ensure that the selected amended remedy continues to provide adequate protection of human health and the environment.

EPA has determined that no further physical construction is necessary at this Site and, therefore, it now qualifies for inclusion on the Construction Completion List.

Jeanne M. Fox
Regional Administrator

9/30/97
Date

RECORD OF DECISION AMENDMENT SUMMARY
Preferred Plating Corporation Site
Farmingdale, Suffolk County, New York

TABLE OF CONTENTS

Section	Page
I. Introduction	1
II. Highlights of Community Participation	3
III. Reasons for Issuing the Record of Decision Amendment	4
IV. Summary of Site Risks	7
V. Description of Remedial Alternatives	10
VI. Summary of Comparative Analysis of Alternatives	12
VII. Selected Remedy	16
VIII. Statutory Determinations	16

Attachments

Appendix I	State Letter of Concurrence
Appendix II	Administrative Record Index
Appendix III	Responsiveness Summary
Appendix IV	Table of Groundwater Sampling Data
Appendix V	1989 Record of Decision

I. INTRODUCTION

The Preferred Plating Corporation (PPC) site (Site) includes the former PPC facility located at 32 Allen Boulevard in Farmingdale, Town of Babylon, Suffolk County, New York. The Site, approximately one acre in size, is situated in a light industrial area one mile east of the Nassau-Suffolk County line.

The Site is almost entirely covered by a building and pavement with two small grassy areas on the southern end and a gravel and grass strip located along the west side of the building. Most of the homes and businesses in the vicinity of the Site are served by a public water supply from the East Farmingdale Water District. The nearest public water supply well field is within one mile south, or hydraulically downgradient, of the Site.

Between September 1951 and June 1976, PPC conducted metal-plating operations to increase the corrosion resistance of metal parts and to provide a more cohesive base for painting. The primary activities at the PPC facility included degreasing, cleaning, and chemically treating the surface of metal parts. These processes involved the use of various chemicals which resulted in the generation, storage, and disposal of hazardous substances. Untreated wastewater was discharged into four below-grade concrete storage pits located directly behind the original building.

Groundwater contaminated with heavy metals was detected in the immediate vicinity of the Site as early as June 1953. During that period an inspection of the PPC facility by the Suffolk County Department of Health Services (SCDHS) discovered that the storage pits were cracked and leaking. Samples taken from the pits revealed the major contaminants to be heavy metals. From 1953 to 1976, SCDHS instituted numerous legal actions against PPC in an effort to stop discharges to the pits and to institute an on-site treatment system. PPC prepared an engineering report in May 1974 in order to apply for a State Pollutant Discharge Elimination System (SPDES) permit which was issued in June 1975. PPC claims to have chemically treated the wastewater in the pits and have had the waste material removed from the Site, but no documentation supporting these assertions exists. The facility was never in full compliance with the terms and conditions outlined in the SPDES permit.

In June 1976, PPC declared bankruptcy. Since then, several firms have occupied the Site, none of which conducted similar operations. In 1982, the original building was extended to the north by 200 feet, and the four waste storage pits were filled and covered by the newly constructed extension.

In September 1984, the New York State Department of Environmental Conservation (NYSDEC) issued a Phase I Investigation Report which summarized past investigations and included a Hazard Ranking System score for the Site. Based on that score, the Site was proposed for inclusion on the National Priorities List of hazardous waste sites in October 1984 and was placed on the List in June 1986, which brings the Site under the purview of the Federal Superfund Program.

From June 1987 to June 1989, Ebasco Services, Inc., EPA's contractor, conducted the initial remedial investigation and feasibility study (RI/FS) of the Site. The study detected heavy metals and chlorinated organics in the groundwater underlying the Site; however, it did not completely identify the source and the extent of contamination within the soils underlying the former storage pits. Therefore, the remedy which resulted from the first operable unit study (OU1) focused only on the treatment of the contaminated groundwater. The study resulted in the OU1 ROD which was signed on September 22, 1989. The major components of that remedy included extraction of the contaminated groundwater, treatment of heavy metals and chlorinated organics, and reinjection of the treated groundwater. The design for this treatment system was completed in March 1992. The construction of the groundwater treatment system was postponed while EPA completed its investigation of the contaminant source areas.[1]

EPA undertook a second RI/FS, which was conducted by Malcolm Pirnie, Inc., to study the contaminant source areas, i.e., the soils within and directly beneath the former leaching pits. A second operable unit (OU2) ROD for excavation and off-site treatment and disposal of the contaminated soils and sediments was signed on September 28, 1992. In June 1993, EPA issued an

---

[1]*In March 1992, EPA recognized that the contaminant source areas would need to be addressed prior to the construction of the groundwater treatment system and the likely approach to remediating the source areas would involve excavation beneath the existing building on the Site. The postponement of the construction of the groundwater treatment system was necessary because the limited space on the former PPC property would not permit source area excavation and groundwater treatment system construction to occur simultaneously.*

Administrative Order to the property owners requiring them to implement this remedy. The remediation, resulting in the removal and off-site disposal of approximately 1,500 tons of contaminated soils and sediments, was performed by the property owners through their consultant, Eder Associates, with EPA oversight. The excavated areas were backfilled with certified clean fill. All construction activities associated with OU2 were completed by June 1994 in accordance with OSWER Directive 9320.2-09, "Close Out Procedures for National Priorities List Sites," dated August 1995, and were done in accordance with the OU2 ROD and the approved remedial design.

The OU1 RI/FS also indicated contamination in monitoring wells located upgradient of the PPC facility source area. Therefore, a third RI/FS was conducted to address a potential source of groundwater contamination upgradient of the PPC facility. The upgradient property owner, Del Laboratories, Inc., initiated an RI/FS in September 1990, pursuant to an Administrative Order on Consent, to determine if its operations had impacted the groundwater quality beneath the PPC Site. The third operable unit (OU3) ROD, signed in September 1993, documented the determination that no remedial action was necessary at the Del Laboratories, Inc. property based in part on the fact that prior actions had been taken to address environmental conditions at the Del Laboratories, Inc. facility.

II. HIGHLIGHTS OF COMMUNITY PARTICIPATION

The Post-Decision Proposed Plan (PDPP) for the Site was released to the public on July 31, 1997. The PDPP, along with all other Site-related documents, is available to the public at both the administrative record and the information repository locations presented below. A notice was published in the *Farmingdale Observer* on August 1, 1997, and again on August 8, 1997, to announce the public comment period on the PDPP, the date of the public meeting to present the PDPP, and the availability of the technical documents at the repositories.

The public comment period began on July 31, 1997 and concluded on August 30, 1997. A public meeting was held on August 7, 1997 at the W.E. Howitt Jr. High School located in Farmingdale, New York. The purpose of the public meeting was to discuss the proposed amendment to the September 1989 ROD.

The responses to the comments expressed verbally at the public meeting are summarized in the Responsiveness Summary, which is attached to this Record of Decision Amendment as Appendix III. No objections to the proposed remedy were voiced at the public meeting and no written comments were received during the public comment period. Public interest in this Site has always been relatively low.

This Record of Decision Amendment presents the selected remedial action for the groundwater underlying the Site, chosen in accordance with the requirements of the Comprehensive Environmental Response, Compensation, and Liability Act (CERCLA) of 1980, as amended, and to the extent practicable, the National Contingency Plan (NCP). The amendment to the remedial decision for the Site is based upon the administrative record. An index for the administrative record is attached to this document as Appendix II. This Record of Decision Amendment will become a part of the administrative record file.

The administrative record file, containing the information upon which the modification to the original remedy is based, is available at the following locations:

Babylon Town Hall
Town Clerk's Office
200 East Sunrise Highway
Lindenhurst, New York 11757
516-957-3005

U.S. Environmental Protection Agency
290 Broadway - Records Center
New York, New York 10007-1866
212-637-4308

III. REASONS FOR ISSUING THE RECORD OF DECISION AMENDMENT

Site conditions have changed significantly since the issuance of the 1989 ROD. The on-site sources of contamination have been excavated and removed for off-site disposal, and the use of improved sampling techniques and resultant analytical data indicate that the contaminant levels in the underlying groundwater have decreased dramatically as have the risks associated with the Site contamination. The following summary explains the changed contaminant levels and Site risks.

Improvement in Groundwater Quality

Based on two rounds of sampling data, obtained in August and September of 1988, from nine wells on the former PPC property and two wells located downgradient from the former PPC property, the OU1 RI documented the presence of heavy metals and chlorinated organic compounds in the groundwater underlying the Site. The primary contaminants of concern were chromium and cadmium; chromium was detected at 5850 parts per billion (ppb) and cadmium at 399 ppb. Lead, nickel, and 1,1,1-trichloroethane (TCA) were also identified as contaminants of concern.

Subsequent sampling activities focused on metals contamination, particularly cadmium and chromium. The maximum concentrations of cadmium and chromium detected during these subsequent sampling events are provided in Table 1. The results clearly indicate a significant decrease in the concentration of the primary contaminants of concern. The first round of samples collected after issuance of the OU1 ROD was obtained from the wells on the former PPC property in February 1991 during performance of a treatability study for the groundwater treatment system remedial design. The levels of contamination had decreased significantly to 1850 ppb of chromium and 254 ppb of cadmium. In August 1993, prior to implementation of OU2 construction activities for the source removal, another round of samples was collected. The levels of contamination detected in this sampling event had decreased further to 560 ppb of chromium and 123 ppb of cadmium. In July 1994, after the OU2 remediation activities were implemented, all wells were sampled to monitor the effect of source removal. The levels of contamination detected had increased to 1630 ppb for chromium and 136 ppb for cadmium. However, the chromium concentration of 1630 ppb was measured in a sample collected from monitoring well MW1SP; the water from this well was extremely turbid. The same sample upon filtering yielded a much lower concentration of chromium at 35 ppb, indicating that the higher unfiltered reading was mostly a result of sample turbidity. This high concentration was not expected since MW1SP is located upgradient of the source area. Additionally, this result was not consistent with previous data collected from this well. In the next round of sampling in April 1995, a technique using a low-flow pump was utilized in an effort to collect representative samples of the aquifer while minimizing

sample turbidity.[2] The levels of contamination detected in these samples decreased to 83 ppb for chromium and 43 ppb for cadmium. The low-flow technique was also utilized in sampling conducted in August 1996; the detected concentrations, 57 ppb for chromium and 60 ppb for cadmium, were very similar to those found in the April 1995 sampling.

Throughout the sampling events, organics were detected infrequently and at low levels. The most frequently detected contaminant was TCA. Concentrations of TCA ranged from 1.9 to 17 ppb. The last round of samples, collected in August 1996, detected TCA ranging from 2 to 5 ppb, and one detection of trichloroethene at 19 ppb; the drinking water standard for both of these contaminants is 5 ppb.

The two monitoring wells, MW-7 and MW-8, are located 1200 and 2400 feet, respectively, downgradient of the former PPC property. Both are deep wells, screened at the bottom of the Upper Glacial aquifer. MW-7 was only sampled in August and September of 1988. Neither cadmium nor chromium was detected above standards. Lead was detected at 30.3 ppb. MW-8 was sampled in August and September 1988, July 1994, and May 1995. Tetrachloroethene and TCA were detected slightly above MCLs in this well, but no heavy metal contamination has ever been detected.

The only surface water body in the Site vicinity is an unnamed, intermittent tributary to Massapequa Creek. It is located about 6,000 feet west, or side-gradient, of the Site. During the first sampling period in 1988, this creek was dry. Since it is not in the direction of groundwater flow, no impact to the creek is believed to exist as a result of Site contaminants.

Over the past several years, the sampling results have indicated a significant decrease in concentrations of the primary contaminants of concern, cadmium and chromium. The decline is most directly attributable to the removal of the on-site source. Better sampling

---

[2]*Groundwater typically occurs naturally in the Upper Glacial Aquifer at low turbidity levels. Elevated sample turbidity may be an artifact of sample collection and well construction techniques. The high turbidity associated with samples collected in 1988 raises the question of whether the reported results were representative of the metals contamination in the aquifer. EPA believes that the detected contaminant levels, especially for chromium, were uncharacteristically high and a result of highly turbid samples rather than representative of actual metals contamination in the aquifer.*

techniques which have minimized the turbidity of the groundwater have also resulted in providing a more accurate measurement of contamination. At present, only cadmium exceeds both its federal and State drinking water standards. Chromium does not exceed either the federal or state drinking water standard of 100 ppb, but does slightly exceed the state groundwater quality standard of 50 ppb. TCA, the only organic contaminant consistently detected throughout the sampling activities, slightly exceeded its State drinking water standard in three of ten wells sampled during the April 1995 sampling round. However, TCA was not detected above federal or state standards in any of the samples collected in August 1996.

IV. SUMMARY OF SITE RISKS

During the performance of the OU1 RI/FS, a baseline risk assessment was conducted to estimate the risks associated with current and potential (future) Site conditions. The baseline risk assessment, which was based on data obtained only during the OU1 RI/FS, estimated the human health and ecological risk which could result from the contamination at the Site if no remedial action were taken. A summary of the baseline risk assessment and a recalculation of the risk using current data are presented below.

There were no risks associated with the current uses of the Site. Because the Site is covered by a building and pavement, the only potential pathway which represents a potential risk to the public was determined to be ingestion of contaminated groundwater. Although the 1988 OU1 groundwater sampling did indicate high levels of heavy metal contamination, there was no direct human exposure to contaminants because the surrounding population was presumed to be supplied by public water. However, the Upper Glacial Aquifer is classified as IIb, or a potential drinking water source, and therefore, a potential risk to human health would exist in the event that this aquifer was developed for use. The baseline risk assessment evaluated the health effects which could result from exposure to contamination as a result of ingestion for a future-use scenario.

An analysis, in 1989, of the concentrations of chemicals present in the groundwater with applicable or relevant and appropriate requirements (ARARs) indicated that numerous inorganic and organic compounds exceeded those ARARs. Based on this analysis, the inorganics cadmium, chromium, lead, nickel, and cyanide were evaluated in the risk assessment. Although not all of the organic

contaminants of concern exceeded ARARs, they were carried through the risk assessment in order to obtain a collective assessment of risk from concurrent exposure to multiple contaminants. At present, an analysis of the concentration of chemicals present in the 1995 and 1996 groundwater samples with ARARs indicates that only cadmium, chromium, TCA, and one detection of trichloroethene exceed their respective ARARs.

Human Health Risk Assessment

EPA's acceptable cancer risk range is 10^{-4} to 10^{-6}, which can be interpreted to mean that an individual may have one in ten thousand to one in a million increased chance of developing cancer as result of site-related exposure to a carcinogen over a 70-year lifetime under the specific exposure conditions at a site.

The results of the baseline risk assessment conducted as part of the 1989 RI/FS indicated that if, in the event that the groundwater was to be used as a source of drinking water, the Site posed unacceptable risks to human health and the environment. The risk assessment was based on a worst case total lifetime exposure to maximum organic concentrations at an assumed constant rate (drinking 2 liters of water daily for 30 years in an adult, living to the age of 70 years). Utilizing the data from the 1995 and 1996 sampling events, it was determined that the total cancer risk for the future-use scenario was 1×10^{-5} (i.e., an excess lifetime cancer risk of one-in-one-hundred thousand), which is within EPA's acceptable cancer risk range.

To assess the overall potential for noncarcinogenic effects posed by more than one contaminant, EPA has developed a hazard index (HI). This index evaluates the potential adverse health effects resulting from exposures to several chemicals simultaneously. The HI is the sum of the hazard quotients (HQ); the HQ being a representation of the chronic daily intake (CDI) divided by the reference dose (RfD) for a specific compound within a particular exposure pathway (i.e., HQ = CDI/RfD). The RfD is a measure of a chemical's threshold for causing effects to which many safety factors have been added (i.e. a safe exposure dose). When the HI exceeds one, there may be concern for potential noncarcinogenic effects. The 1989 OU1 RI/FS calculated the HI under a worst case scenario for cadmium and chromium as 22.8 and 170, respectively. However, the significant decrease in contaminant levels over the past several years has resulted in a significant decrease in associated potential risk levels. Under present conditions, using

the sampling data from 1995 and 1996, the recalculated HI for cadmium and chromium is 2.2 and 0.06, respectively.

While there was once a significant noncarcinogenic risk from potential future consumption of the Upper Glacial Aquifer because of the previous high incidence of cadmium and chromium contamination, such a risk no longer exists. The HI is currently only slightly above the acceptable HI of 1 because of the presence of cadmium. Furthermore, any risk is associated with an unlikely future-use scenario because the Upper Glacial Aquifer at the Site is not used as a drinking water supply and downgradient levels of cadmium are below the federal and state drinking water standards.

Ecological Assessment

The ecological risk assessment considered potential exposure routes of Site contamination to terrestrial wildlife. The only potential route of exposure to wildlife in the Site vicinity is if contaminants were transported through groundwater and discharged via groundwater into surface waters, particularly Great South Bay. The potential effects of contaminated groundwater on aquatic life were discussed in the 1989 ecological risk assessment performed for the first operable unit. It was determined that no significant effect on aquatic organisms in the Great South Bay or creeks in the vicinity of the Site would occur if contaminants were transported from the Site through groundwater and discharged into surface waters.

Uncertainties

The procedures and inputs used to assess potential human health risks in this evaluation are subject to wide uncertainties. In general, the main sources of uncertainty include:

- environmental chemistry sampling and analysis;
- environmental parameter measurement;
- fate and transport modeling;
- exposure parameter estimation; and
- toxicological data.

Uncertainty in environmental sampling arises in part from the potentially uneven distribution of chemicals in the media sampled. Consequently, there is significant uncertainty as to the actual levels present. Environmental chemistry-analysis error can stem

from several sources including the errors inherent in the analytical methods and characteristics of the matrix being sampled.

Uncertainties in the exposure assessment are related to estimates of how often an individual would actually come into contact with the chemicals of concern, the period of time over which such exposure would occur, and in the models used to estimate the concentrations of the chemical of concern at the point of exposure.

Uncertainties in toxicological data occur in extrapolating both from animals to humans and from high to low doses of exposure, as well as from the difficulties in assessing the toxicity of a mixture of chemicals. These uncertainties are addressed by making very conservative assumptions concerning risk and exposure parameters throughout the assessment. As a result, the risk assessment provides upper bound estimates of the risks to populations near the Site, and is highly unlikely to underestimate actual risks related to the Site.

Actual or threatened releases of hazardous substances from this Site, if not addressed by implementing the response action selected in the ROD Amendment, may present a potential threat to the environment through the groundwater pathway.

V. DESCRIPTION OF REMEDIAL ALTERNATIVES

CERCLA requires that each selected site remedy be protective of human health and the environment, be cost-effective, comply with other statutory laws, and utilize permanent solutions and alternative treatment technologies and resource recovery alternatives to the maximum extent practicable. In addition, CERCLA includes a preference for the use of treatment as a principal element for the reduction of toxicity, mobility, or volume of the hazardous substances.

This ROD Amendment evaluates two alternatives for addressing groundwater contamination, namely, Alternatives GW-1 and GW-2. Consistent with EPA's ROD amendment guidance, the original OU1 remedy, GW-2, is being compared to the new preferred Alternative GW-1, which was developed based upon existing Site conditions, including the groundwater monitoring data presented above. It should be noted that the time assumed to implement the remedy reflects only the time required to construct and the already designed remedy, and does not include the time required to design

the remedy, negotiate with any potentially responsible parties, or procure contracts for design and construction.

The remedial action objectives for addressing groundwater contamination are (1) to protect human health by ensuring future residents are not exposed to contaminated groundwater, and (2) to reduce groundwater contamination levels to drinking water standards.

The alternatives for addressing the Site groundwater contamination are:

Alternative GW-1: No Further Action/Natural Attenuation

Capital Cost:	$ 0
O & M Cost:	$ 5,000/year (for 5 years)
Present Worth Cost:	$19,588
Time to Implement:	immediate

This alternative does not include active treatment of the aquifer; it relies upon natural attenuation to reduce the contamination below federal and state drinking water standards and/or groundwater quality standards. A monitoring program would be implemented on an annual basis to demonstrate the effectiveness of the naturally occurring mechanisms. Since contaminants will remain on the Site above health-based risk levels, EPA would conduct a five-year review to ensure that the remedy is protective of human health and the environment. If the natural attenuation of contaminants in the groundwater at the Site has not improved groundwater quality to federal drinking water standards and State drinking water and groundwater standards, EPA and NYSDEC would reevaluate the need for an active treatment remedy for the Site.

Alternative GW-2: Extraction/Precipitation of Divalent Metals/ Ion Exchange/Activated Carbon/Reinjection

Capital Cost:	$ 1,923,900
O & M Cost:	$ 920,900/yr
Present Worth Cost:	$ 9,327,400
Time to Implement:	1 Year

This alternative consists of the extraction and on-site treatment of contaminated groundwater. Groundwater would be extracted from one on-site collection well. The extracted groundwater would first

go through a 2-stage precipitation and clarification/filtration unit for the removal of divalent metals, followed by an ion exchange process for the removal of the chromate ion, and if necessary, a carbon adsorption unit for removal of volatile organic compounds. The metals treatment would generate hazardous waste residuals requiring ultimate disposal in a Resource Conservation and Recovery Act Subtitle C facility. The treatment scheme is a proven technology capable of removing the contaminants of concern from the groundwater. The extracted groundwater would be treated through this process to satisfy all federal and state standards for Class IIb waters, i.e., potential drinking waters, prior to reinjection. The treated groundwater would be discharged to a reinjection well installed east of the former PPC property and upgradient of both the extraction well and former leaching pits. A groundwater monitoring program would be required to evaluate the effectiveness of this remedial action.

VI. SUMMARY OF COMPARATIVE ANALYSIS OF ALTERNATIVES

During the detailed evaluation of remedial alternatives, each alternative is assessed against nine evaluation criteria, namely, overall protection of human health and the environment, compliance with applicable or relevant and appropriate requirements, long-term effectiveness and permanence, reduction of toxicity, mobility, or volume through treatment, short-term effectiveness, implementability, cost, and state and community acceptance.

The evaluation criteria are described below.

- Overall protection of human health and the environment addresses whether a remedy provides adequate protection and describes how risks posed through each pathway are eliminated, reduced, or controlled through treatment, engineering controls, or institutional controls.

- Compliance with applicable or relevant and appropriate requirements (ARARs) addresses whether a remedy will meet all of the applicable or relevant and appropriate requirements of other Federal and State environmental statutes and requirements or provide grounds for invoking a waiver.

- Long-term effectiveness and permanence refers to the ability of a remedy to maintain reliable protection of human health and the environment over time, once cleanup goals have been met.

- Reduction of toxicity, mobility, or volume through treatment is the anticipated performance of the treatment technologies a remedy may employ.

- Short-term effectiveness addresses the period of time needed to achieve protection and any adverse impacts on human health and the environment that may be posed during the construction and implementation period until cleanup goals are achieved.

- Implementability is the technical and administrative feasibility of a remedy, including the availability of materials and services needed to implement a particular option.

- Cost includes estimated capital and operation and maintenance costs, and net present worth costs.

- State acceptance indicates whether, based on its review of the RI/FS reports and Post-Decision Proposed Plan, the State concurs, opposes, or has no comment on the preferred alternative at the present time.

- Community acceptance is assessed by reviewing the public comments received on all relevant reports and the Post-Decision Proposed Plan during the public comment period.

A comparative analysis of these alternatives based upon the evaluation criteria described above follows.

Overall Protection of Human Health and the Environment

Both alternatives are similar in their abilities to protect human health and the environment. As noted above in the risk assessment section, there are no current use risks associated with the contamination at the Site. The groundwater on the Site is not being used as a source of drinking water. In addition, no significant impacts to ecological receptors have been observed. The future use carcinogenic risks at the Site are within EPA's risk range, and the noncarcinogenic risks are just slightly above EPA's acceptable level; however, these risks assume that the Site groundwater will be utilized as a potable water supply, an event that is highly unlikely.

As there are no current or anticipated future users of the groundwater on the Site, and since the levels of contaminants in

the groundwater have decreased dramatically in the last few years and are expected to drop below drinking water and groundwater quality standards in the future, EPA believes that both GW-2 and GW-1 would provide full protection of human health and the environment.

Compliance with ARARs

Since the impacted groundwater underlying the Site is a potential future source of drinking water, federal and state drinking water standards, as well as State groundwater quality standards, are ARARs. For Alternative GW-1, EPA believes that ARARs would be achieved over time through natural attenuation; compliance with ARARs would be demonstrated through an annual monitoring program. For Alternative GW-2, compliance with ARARs for the aquifer would be achieved through extraction and active treatment for removal of metals. The treated groundwater would meet appropriate standards prior to being reinjected. Residual sludges from the treatment system would be treated and disposed of in accordance with RCRA regulations.

Long-Term Effectiveness and Permanence

Both Alternatives GW-1 and GW-2 are expected, over time, to provide the same degree of long-term effectiveness and permanence.

Reduction in Toxicity, Mobility or Volume Through Treatment

Alternative GW-2 would reduce the toxicity, mobility and volume of contaminated groundwater through extraction and subsequent treatment. Alternative GW-2 would potentially achieve this reduction in a shorter time frame than Alternative GW-1, which relies solely on natural attenuation and does not actively reduce the toxicity, mobility or volume of contaminants in the groundwater.

Short-term Effectiveness

Although Alternative GW-2 would potentially achieve cleanup goals in a shorter time frame than Alternative GW-1, this is not expected to be significant. This is supported by the fact that groundwater contaminant levels have decreased so significantly over the past several years.

Alternative GW-1 presents virtually no short-term impacts to human health and the environment since no construction is involved. The construction activities required to implement Alternative GW-2 would have potentially negative impacts on Site workers and nearby residents. While efforts would be made to minimize these impacts, some disturbances would result from disruption of traffic, excavation activities on public and private land, and noise. It is estimated that the construction activities for Alternative GW-2 would take approximately 12 months to complete.

Implementability

The technologies proposed for extraction and treatment of contaminated groundwater in Alternative GW-2 are proven and reliable in achieving the specified cleanup goals, however, Alternative GW-2 would be much more complex than Alternative GW-1 to implement. Alternative GW-1 does not involve any construction and is much easier to implement as it only requires a monitoring program utilizing existing monitoring wells.

Cost

Alternative GW-1 has no direct costs associated with its implementation. The present worth of this alternative of $19,588 is for implementation of an annual groundwater monitoring program. For cost-estimating purposes, a duration of 5 years was assumed. The capital and present worth costs of Alternative GW-2 are estimated to be approximately $1,923,900 and $9,327,400, respectively.

State Acceptance

The State of New York concurs on the proposed modified remedy. A letter of concurrence is attached as Appendix I.

Community Acceptance

No objections from the community were raised regarding the selected remedy. A responsiveness summary, which addresses all comments pertaining to the amended groundwater remedy received at the August 7, 1997 public meeting, is attached as Appendix III.

VII. SELECTED REMEDY

Based upon an evaluation of the various alternatives, EPA and NYSDEC have determined that Alternative GW-1, No Further Action/Natural Attenuation, is the appropriate modified remedy for the Site.

This alternative provides the best balance of trade-offs among alternatives with respect to the evaluating criteria in that it is protective of human health and the environment, complies with ARARs, is cost-effective, and utilizes permanent solutions and alternative treatment technologies or resource recovery technologies to the maximum extent practicable.

VIII. STATUTORY DETERMINATIONS

Under its legal authorities, the EPA's primary responsibility at Superfund sites is to undertake remedial actions that achieve adequate protection of human health and the environment. In addition, Section 121 of CERCLA establishes several other statutory requirements and preferences that the selected remedy must meet. Section 121 of CERCLA specifies that when complete, the selected remedial action for the Site must comply with ARARs established under federal and state environmental laws unless a statutory waiver is justified. The selected remedy also must be cost-effective and utilize permanent solutions and alternative treatment technologies or resource recovery technologies to the maximum extent practicable. Finally, the statute includes a preference for remedies that employ treatment that permanently and significantly reduce the volume, toxicity, or mobility of hazardous wastes as their principal element. The following sections discuss how the selected remedy meets these statutory requirements.

Protection of Human Health and the Environment:

Since the levels of contaminants in the groundwater have decreased dramatically in the last few years, it is anticipated that the natural attenuation component of the modified selected remedy will continue to reduce the concentration of cadmium and chromium in the groundwater at the Site. As contamination above federal and state standards is limited to the area of the Site and there are no current or future users of the groundwater at the Site, the remedy will provide full protection of human health and the environment.

It is EPA's belief that the groundwater natural attenuation remedy will eventually provide for unlimited use of the groundwater at this Site. EPA has determined, as a matter of policy, that policy reviews of the remedies should be conducted when ongoing remedial actions will not allow for unlimited use within five years of the initiation of the remedial action. The remedies previously selected for this Site have been reviewed as part of this ROD amendment and have been found to remain protective of human health and the environment. This review was conducted pursuant to the NCP Section 300.430(f)(4)(ii). The next five-year review will be conducted within five years of this Decision. At that time, the monitoring results will be reviewed to determine if drinking water standards have been met. In addition, a review of standards or ARARs will be performed.

Compliance with ARARs:

The selected remedy will achieve ARARs, specifically the Safe Drinking Water Act (SDWA) Maximum Contaminant Levels (40CFR 141.11-141.16), 6NYCRR Groundwater Quality Regulation (Parts 703.5, 703.6, 703.7) and NYS Sanitary Code 10NYCRR Part 5 for contaminants in drinking water, over time through natural attenuation. Compliance with ARARs would be demonstrated through an annual groundwater monitoring program.

Cost-Effectiveness:

The modified selected remedy is cost-effective and provides the greatest overall protectiveness proportionate to costs.

Utilization of Permanent Solutions and Alternative Treatment Technologies (or Resource Recovery Technologies) to the Maximum Extent Practicable:

The modified selected remedy represents the maximum extent to which permanent solutions and treatment technologies can be utilized in a cost-effective manner at the Site.

Preference for Treatment as a Principal Element:

Treatment of the aquifer-at-large is determined not to be cost-effective at this Site.

APPENDIX I

Concurrence Letter from the NYSDEC

FILE COPY

New York State Department of Environmental Conservation
50 Wolf Road, Albany, New York 12233-7010

John P. Cahill
Commissioner

SEP 23 1997

Mr. Richard Caspe
Director
Emergency & Remedial Response Division
U.S. Environmental Protection Agency
Region II
290 Broadway
New York, NY 10007-1866

Post-It® Fax Note 7671	Date 9/25	# of pages ▶ 1
To D. Garbarini	From M. Chen	
Co./Dept.	Co.	
Phone #	Phone #	
Fax #	Fax #	

Dear Mr. Caspe:

Re: Preferred Plating Corporation ID No. 152030

The New York State Department of Environmental Conservation approves of the record of decision amendment for the Preferred Plating Corporation. As stated in your proposed ROD amendment, the major modification to the original remedy will be:

1. elimination of the groundwater extraction and treatment system portion of the 1989 selected remedy;

2. implementation of an annual groundwater monitoring program to ensure that the remedy remains protective of human health and the environment.

Please contact Sal Ervolina at (518) 457-4349 if you have any questions.

Sincerely,

Michael J. O'Toole, Jr.
Director
Division of Environmental Remediation

c: D. Garbarini, USEPA-Region II

bc: J. Cahill
M. O'Toole (2)
T. Quinn
S. Ervolina
M. Chen/File

PREFER.919

APPENDIX II

Index for the Administrative Record

PREFERRED PLATING CORPORATION
OPERABLE UNIT ONE
ADMINISTRATIVE RECORD FILE UPDATE
INDEX OF DOCUMENTS

RECORD OF DECISION

Amendments to the Record of Decision

P. 903-961 Report: Superfund Support Sampling Inspection Report, Preferred Plating, Farmingdale, New York, August 17-18, 1993, prepared by Mr. David Dugan, Environmental Scientist, Source Monitoring Section, U.S. EPA, approved for the Director by Richard D. Spear, Ph.D., Chief, Surveillance and Monitoring Branch, U.S. EPA, December 16, 1993.

P. 962-1023 Report: Superfund Support Sampling Inspection Report, Preferred Plating, Farmingdale, New York, July 13-14, 1994, prepared by Mr. David Dugan, Environmental Scientist, Source Monitoring Section, U.S. EPA, approved for the Director by Richard D. Spear, Ph.D., Chief, Surveillance and Monitoring Branch, U.S. EPA, October 5, 1994.

P. 1024-1106 Report: Superfund Support Sampling Inspection Report, Preferred Plating, Farmingdale, New York, April 3-6, 1995, prepared by Mr. Michael A. Mercado, Environmental Scientist, U.S. EPA, approved for the Director by Richard D. Spear, Ph.D., Chief, Surveillance and Monitoring Branch, U.S. EPA, August 22, 1995.

P. 1107-1185 Report: Sampling Report and Data Presentation, Preferred Plating, Farmingdale, New York, Groundwater Sampling Event, August 27-29, 1996, prepared by Mr. Michael A. Mercado, Environmental Scientist, Hazardous Waste Support Branch (DESA/HWSB), U.S. EPA, approved by Mr. Robert Runyon, Chief, Hazardous Waste Support Branch(DESA/HWSB), U.S. EPA, undated.

P. 1186-1192 Plan: Superfund Proposed Plan, Preferred Plating Corporation Superfund Site, Farmingdale, New York, prepared by U.S. EPA, July 1997.

APPENDIX III

Responsiveness Summary

APPENDIX III

RESPONSIVENESS SUMMARY

PREFERRED PLATING CORPORATION SUPERFUND SITE

INTRODUCTION

A responsiveness summary is required by Superfund regulation. It provides a summary of citizens' comments and concerns, which in this instance were raised at the August 7, 1997 public meeting. It also includes the responses of the United States Environmental Protection Agency (EPA) and the New York State Department of Environmental Conservation (NYSDEC) to those comments and concerns. All comments summarized in this document have been considered in EPA and NYSDEC's final decision for the selected remedy for the Preferred Plating Corporation site (Site).

SUMMARY OF COMMUNITY RELATIONS ACTIVITIES

Community interest in the Site has been low throughout the remedial investigation and feasibility study (RI/FS) process during all three operable units.

The Post-Decision Proposed Plan (PDPP) for the Site was released to the public for comment on July 31, 1997. This document, together with the Sampling Inspection Reports and the original operable unit 1 (OU1) RI/FS, was made available to the public in the Administrative Record file at the EPA File Room in Region II, New York, and in the information repository located at the Babylon Town Hall, Town Clerk's Office, 200 East Sunrise Highway, Lindenhurst, New York. The notice of availability for the above-referenced documents was published in the *Farmingdale Observer* on August 1, 1997 and again on August 8, 1997. The public comment period on these documents was open from July 31, 1997 to August 30, 1997.

EPA conducted a public meeting on August 7, 1997 at the W.E. Howitt Jr. High School in Farmingdale, New York to discuss the PDPP for the Site and to provide an opportunity for the interested parties to present oral comments and questions to EPA. Three individuals attended the public meeting. Comments raised at the public meeting reflected public support of the proposed amended remedy. No written comments were received by EPA.

Attached to the Responsiveness Summary are the following Appendices:

Appendix A - Post-Decision Proposed Plan

Appendix B - Public Notice

Appendix C - August 7, 1997 Public Meeting Attendance Sheet

Appendix D - August 7, 1997 Public Meeting Transcript

SUMMARY OF COMMENTS AND RESPONSES

Comments expressed at the August 7, 1997 public meeting and EPA's responses to them are summarized below.

Comment #1: A representative from Suffolk County Department of Health Services (SCDHS) asked about the possibility of a plume of contamination leaving the former PPC property.

EPA's response #1: There has been no evidence indicating that a plume of contamination is migrating from the former PPC property. EPA installed two separate deep groundwater monitoring wells downgradient of the former PPC property in an attempt to identify a potential plume. Monitoring well MW7DP, installed approximately 1/4 mile southeast of the former PPC property, was screened at a depth of 60 to 70 feet below grade. Monitoring well MW8DP, installed approximately 1/2 mile south-southwest of the former PPC property, was also screened at a depth of 60 to 70 feet below grade. Both wells were sampled in 1988 and no heavy metal contaminants were detected above drinking water standards. Only two organic compounds were found to exceed standards slightly. Additionally, data provided to EPA by SCDHS regarding a shallow well sampled in 1994, located approximately 50 feet south of the former PPC property, showed the presence of only chromium at 63 ppb, well below its drinking water standard of 100 ppb. No cadmium was found in this well. Based on the preceding, EPA concluded that a contaminated plume is not migrating from the former PPC property.

Comment #2: A representative from SCDHS asked whether the annual groundwater monitoring and data evaluation would be performed utilizing only the wells on the former PPC property, or could additional data from other wells be included?

EPA's response #2: While the annual monitoring program would focus on the wells installed on the former PPC property, additional commercial or residential wells in the vicinity of the former PPC property could be included.

Comment #3: A local property owner inquired as to the identity of the Site's potentially responsible parties (PRP), whether the PRPs had funded any of the studies or remediation activities, and whether EPA had attempted to recover costs from the PRPs.

EPA's response #3: The names of the PRPs for the Site are Joseph Gazza and George Paro, who are the current owners of the property formerly occupied by the Preferred Plating Corporation. In June 1993, EPA issued an Administrative Order to the property owners to excavate the underground leaching pits and associated contaminated soils and sediments. This work was successfully completed in June 1994. To date, EPA has not recovered any costs from these property owners.

Comment #4: A representative from SCDHS asked whether the soil remediation involved the dismantlement of the existing on-site building.

EPA's response #4: A large section of the existing on-site building was dismantled during the implementation of the soils remedy to allow for complete excavation of the underlying leaching pits and soils/sediments beneath them.

Comment #5: A local property owner questioned how the contaminants could leach to underlying groundwater without infiltration of rain water since the original pits were beneath the on-site building.

EPA's response #5: Originally, the leaching pits were not covered by a building, but exposed to infiltration of rainwater and runoff. Even with the building extension covering the pits, the underlying watertable was found to fluctuate as much as eight feet depending on the season. The bottoms of the concrete pits were cracked, allowing groundwater associated with a high water table to enter, thereby contaminating the underlying groundwater.

Comment #6: A representative of the Town of Babylon asked whether it was unusual to see such a dramatic drop in contaminant concentration levels after the source removal given the fact that a plume does not seem to be migrating from the former PPC property.

EPA's response #6: It is EPA's belief that the original two rounds of sampling contained very turbid water and were not completely representative of the true concentrations in the underlying groundwater. As our sampling techniques improved, specifically the use of low-flow pump technology, the turbidity of the samples decreased and the contaminant concentrations for heavy metals decreased as well. That, together with the source removal, accounts for the significant decline in concentrations detected in the latest two rounds of sampling.

APPENDIX A

POST-DECISION PROPOSED PLAN

PREFERRED PLATING CORPORATION SUPERFUND SITE
Farmingdale, New York

EPA
Region 2 July 1997

PURPOSE OF POST-DECISION PROPOSED PLAN

This Post-Decision Proposed Plan describes proposed fundamental changes to the September 1989 Record of Decision (ROD) issued by the United States Environmental Protection Agency (EPA) with respect to the Preferred Plating Corporation (PPC) Superfund site (Site) and concurred on by the New York State Department of Environmental Conservation (NYSDEC).

The remedy specified in the 1989 ROD required the extraction and treatment of groundwater contaminated mainly with cadmium and chromium.

As described in this Post-Decision Proposed Plan, EPA is proposing that the extraction and treatment of groundwater is no longer necessary to ensure the protection of human health and the environment.

COMMUNITY ROLE IN SELECTION PROCESS

EPA and NYSDEC rely on public input to ensure that the concerns of the community are considered in selecting an effective remedy for each Superfund site. Similarly, EPA and NYSDEC also rely on public input when proposing fundamental changes to a remedy previously selected. To this end, this Post-Decision Proposed Plan and the Sampling Inspection Reports have been made available to the public for a public comment period which begins on July 31, 1997 and concludes on August 30, 1997.

A public meeting will be held during the public comment period at the *W.E. Howitt Jr. High School* on Thursday, August 7, 1997 at 7:00 p.m. to present the basis for the proposed amendment to the 1989 ROD and to receive public comments. Comments received at the public meeting, as well as written comments, will be documented in the Responsiveness Summary Section of this ROD amendment.

All written comments should be addressed to:

Janet Cappelli
U.S. Environmental Protection Agency
290 Broadway - 20th Floor
New York, NY 10007-1866

DATES TO REMEMBER

July 31, 1997 to August 30, 1997
Public comment period on
Post-Decision Proposed Plan

Thursday, August 7, 1997 - 7:00 p.m.
Public meeting at the W.E. Howitt Jr. High School
Vancott and Grant Avenues
Farmingdale, New York

Copies of the Sampling Reports, the Post-Decision Proposed Plan and supporting documentation are available at the following locations:

West Babylon Library
211 Route 109
West Babylon, New York 11704
Tel. (516) 669-5445
Hours: Mon-Thurs., 10:00 a.m. to 9:00 p.m.
Fri-Sat., 10:00 a.m. to 5:00 p.m.

Babylon Town Hall
Town Clerks Office
200 East Sunrise Highway
Lindenhurst, New York 11757
Tel. (516) 957-3005
Hours: Mon-Fri., 9:00 a.m. to 4:00 p.m.

SITE BACKGROUND

The PPC site includes the former PPC facility located at 32 Allen Boulevard in Farmingdale, Town of Babylon, Suffolk County, New York. The PPC site, approximately one acre in size, is situated in a light industrial area one mile east of the Nassau-Suffolk County line.

The Site is almost entirely covered by a building and pavement with two small grassy areas on the southern end and a gravel and grass strip located along the west side of the building. Most of the homes and businesses in the vicinity of the Site are served by a public water supply from the East Farmingdale Water District. The nearest public water supply well field is within one mile south of the Site, which is hydraulically downgradient.

Between September 1951 and June 1976, PPC conducted metal-plating operations to increase the corrosion resistance of metal parts and to provide a more cohesive base for painting. The primary activities at the PPC facility included degreasing, cleaning, and chemically treating the surface of metal parts. These processes involved the use of various chemicals which resulted in the generation, storage, and disposal of hazardous substances. Untreated wastewater was discharged into four below-grade concrete storage pits located directly behind the original building.

Groundwater contaminated with heavy metals was detected in the immediate vicinity of the Site as early as June 1953. During an inspection of the PPC facility by the Suffolk County Department of Health Services (SCDHS), it was discovered that the storage pits were cracked and leaking. Samples taken from the pits showed the major contaminants to be heavy metals. From 1953 to 1976, SCDHS instituted numerous legal actions against PPC in an effort to stop discharges to the pits and to upgrade the on-site treatment system. PPC prepared an engineering report in May 1974 in order to apply for a State Pollutant Discharge Elimination System (SPDES) permit which was issued in June 1975. PPC claims to have chemically treated the wastewater in the pits and had the waste material removed from the Site, but no documentation supporting this action exists. The facility was never in full compliance with the terms and conditions outlined in the SPDES permit.

In June 1976, PPC declared bankruptcy. Since then, several firms have occupied the Site, none of which conducted similar operations. In 1982, the original building was extended to the north by 200 feet, and the four waste storage pits were filled and covered by the newly constructed extension.

In September 1984, the NYSDEC issued a Phase I Investigation Report which summarized past investigations and included a Hazard Ranking System (HRS) score for the Site. Based on the HRS score, the Site was proposed for inclusion on the National Priorities List (NPL) of hazardous waste sites in October 1984 and was placed on the NPL in June 1986, which brings the Site under the purview of the Federal Superfund Program.

From June 1987 to June 1989, Ebasco Services, Inc., EPA's contractor, conducted the initial remedial investigation/feasibility study (RI/FS) of the Site. The study detected heavy metals and chlorinated organics in the groundwater underlying the Site, however, it did not completely identify the source and the extent of contamination within the soils underlying the former storage pits. Therefore, the first operable unit study (OU1) focused only on a remedy for the treatment of the contaminated groundwater. The study resulted in a ROD which was signed on September 22, 1989. The major components of that remedy included extraction of the contaminated groundwater, treatment of heavy metals and chlorinated organics, and reinjection of the treated groundwater. The design for this treatment system was completed in March 1992. The construction of the groundwater treatment system was postponed while EPA completed its investigation of the contaminant source areas.[1]

EPA undertook a second RI/FS, which was conducted by Malcolm Pirnie, Inc., to study the contaminant source areas, i.e., the soils within and directly beneath the former leaching pits. A second operable unit (OU2) ROD for excavation and off-site treatment and disposal of the contaminated soils and sediments was signed on September 28, 1992. The remediation, resulting in the removal and off-site disposal of approximately 1500 tons of contaminated soils and sediments, was performed by the site owners with EPA oversight and was completed in June 1994.

The OU1 RI/FS also indicated contamination in monitoring wells located upgradient of the PPC facility source area. Therefore, a third RI/FS was conducted to address a potential source of groundwater contamination upgradient of the PPC facility. The upgradient property owner, Del Laboratories, Inc., initiated an RI/FS in September 1990 to determine if its operations had impacted the groundwater quality beneath the PPC Site. The third operable unit (OU3) ROD, signed in September 1993, determined that no remedial action was necessary based on prior actions which had been taken to address environmental conditions at the Del Laboratories, Inc. facility.

---

[1] *In March 1992, EPA recognized that the contaminant source areas would need to be addressed prior to the construction of the groundwater treatment system and the likely approach to remediating the source areas would involve excavation beneath the existing building on the Site. The postponement of the construction of the groundwater treatment system was necessary because the limited space on the Site would not permit source area excavation and groundwater treatment system construction to occur simultaneously.*

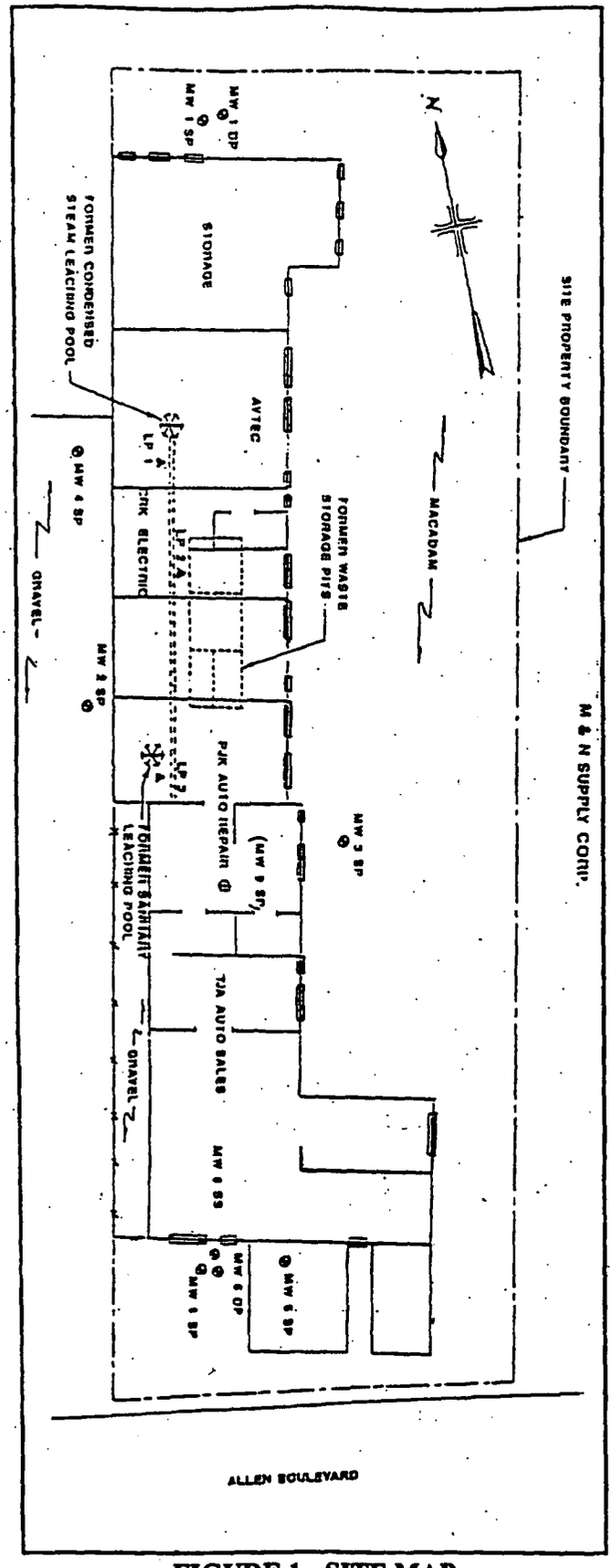

FIGURE 1 - SITE MAP

SUMMARY OF GROUNDWATER SAMPLING

Based on two rounds of sampling data, obtained in August and September of 1988, from 9 on-site and 2 off-site monitoring wells, the OU1 RI documented the presence of heavy metals and chlorinated organic compounds in the groundwater underlying the Site. The primary contaminants of concern were chromium and cadmium; chromium was detected at 5850 parts per billion (ppb) and cadmium at 399 ppb. Lead, nickel, and 1,1,1-trichloroethane (TCA) were also identified as contaminants of concern.

Subsequent sampling activities focussed on metals contamination, particularly cadmium and chromium. The maximum concentrations of cadmium and chromium detected during these subsequent sampling events are provided in Table 1. The results clearly indicate a significant decrease in the concentration of the primary contaminants of concern. The first round of samples collected after issuance of the OU1 ROD was obtained performance of a treatability study for the groundwater treatment system remedial design. The highest levels of contamination had decreased significantly to 1850 ppb of chromium and 254 ppb of cadmium. In August 1993, prior from the on-site wells in February 1991 during to implementation of OU2 construction activities for the source removal, another round of samples was collected. The highest levels of contamination detected in this event had decreased further to 560 ppb of chromium and 123 ppb of cadmium. In July 1994, after the OU2 remediation activities were implemented, all wells were sampled to monitor the effect of source removal. The highest levels of contamination detected had increased to 1630 ppb for chromium and 136 ppb for cadmium. However, the chromium concentration of 1630 ppb was measured in a sample collected from Well 1SP; the water from this well was extremely turbid. The same sample upon filtering yielded a much lower concentration of chromium at 35 ppb, indicating that the higher unfiltered reading was mostly a result of the sample turbidity. In the next round of sampling in April 1995, a technique using a low-flow pump was utilized in an effort to collect representative samples of the aquifer while minimizing sample turbidity.[2] The highest levels of contamination detected decreased to 83 ppb for chromium and 43 ppb for cadmium. The low-flow technique was also utilized in sampling conducted in August 1996; the highest detected concentrations, 57 ppb

---

[2]*Groundwater typically occurs naturally in the Upper Glacial Aquifer at low turbidity levels. Elevated sample turbidity may be an artifact of sample collection and well construction techniques. The high turbidity associated with samples collected in 1988 raises the issue of whether the reported results were representative of the aquifer. EPA believes that the detected contaminant levels, especially for chromium, were uncharacteristically high and indicative of highly turbid samples rather than representative of the aquifer.*

TABLE 1 - MAXIMUM CONTAMINANT CONCENTRATIONS (ppb)

DATE OF SAMPLING EVENT	CADMIUM	CHROMIUM
AUGUST 1988	399	5850
SEPTEMBER 1988	348	3390
FEBRUARY 1991	254	1850
AUGUST 1993	123	560
JULY 1994	136	1630 (35 filtered)
APRIL 1995	43	83
AUGUST 1996	48	57

for chromium and 60 ppb for cadmium, were very similar to those found in the April 1995 sampling.

Throughout the sampling events, organics were detected infrequently and at low levels. The most frequently detected contaminant was TCA. Concentrations of TCA ranged from 1.9 to 17 ppb. The last round of sampling, collected in August 1996, detected TCA ranging from 2 to 5 ppb and one detection of trichloroethene at 19 ppb; the drinking water standard for both of these contaminants is 5 ppb.

The two off-site monitoring wells, MW-7 and MW-8, are located 1200 and 2400 feet, respectively, downgradient of the Site. Both are deep wells, screened at the bottom of the Upper Glacial aquifer. MW-7 was only sampled in August and September of 1988. Neither cadmium nor chromium were detected above any standards. Lead was detected at 30.3 ppb. MW-8 was sampled in August and September 1988, July 1994, and May 1995. Tetra-chloroethene and 1,1,1-trichloroethane were detected slightly above MCLs in this well, but no heavy metal contamination was ever detected.

The only surface water body in the Site vicinity is an unnamed, intermittent tributary to Massapequa Creek. It is located about 6,000 feet west, or side-gradient, of the Site. During the first sampling period in 1988, this creek was dry. Since it is not in the direction of groundwater flow, no impact to the creek is believed to exist due to Site contaminants.

Over the past several years, the sampling results have indicated a significant decrease in concentrations of the primary contaminants of concern, cadmium and chromium. The decline is most directly attributable to the removal of the on-site source. Better sampling techniques to minimize the turbidity of the groundwater have also been helpful in providing a more accurate measurement of contamination. At present, only cadmium exceeds both its federal and state drinking water standards. Chromium does not exceed either the federal or state drinking water standard of 100 ppb, but does very slightly exceed the state groundwater quality standard of 50 ppb. TCA, the only organic consistently detected throughout the sampling activities, slightly exceeded its state drinking water standard in 3 out of 10 wells from the April 1995 sampling round. However, TCA was not detected above standards in any of the samples collected in August 1996.

SUMMARY OF SITE RISK

During the performance of the OU1 RI/FS, a baseline risk assessment was conducted to estimate the risks associated with current and potential (future) site conditions. The baseline risk assessment, which was based on data obtained only during the OU1 RI/FS, estimated the human health and ecological risk which could result from the contamination at the Site, if no remedial action were taken. A summary of the baseline risk assessment and a recalculation of the risk using current data are presented below.

There were no risks associated with the current uses of the Site, because the Site is covered by a building and pavement, the only potential pathway with a risk to the public was determined to be ingestion of contaminated groundwater. Although the 1988 OU1 groundwater sampling did indicate high levels of heavy metal contamination, there was no direct human exposure to contaminants since the surrounding population is supplied by public water. However, the Upper Glacial Aquifer is classified as IIb, or a potential drinking water source, and therefore, a potential risk to human health would exist in the event that this aquifer were developed for use. The baseline risk assessment evaluated the health effects which could result from exposure to contamination as a result of ingestion for a future-use scenario.

A comparison, in 1989, of the concentrations of chemicals in the groundwater with applicable or relevant and

appropriate requirements (ARARs) indicated that numerous inorganic and organic compounds exceeded those ARARs. Based on this comparison, the inorganics cadmium, chromium, lead, nickel and cyanide were evaluated and modeled in the risk assessment. Although not all of the organic contaminants of concern exceeded ARARs, they were carried through the risk assessment in order to obtain a collective assessment of risk from concurrent exposure to multiple contaminants. At present, a comparison of the concentration of chemicals in the 1995 and 1996 groundwater samples with ARARs indicates that only cadmium, chromium, TCA, and one detection of trichloroethylene exceed their respective ARARs, with TCA only slightly above its ARAR.

EPA's acceptable cancer risk range is 10^{-4} to 10^{-6}, which can be interpreted to mean that an individual may have one in ten thousand to one in a million increased chance of developing cancer as result of site-related exposure to a carcinogen over a 70-year lifetime under the specific exposure conditions at a site.

The results of the baseline risk assessment conducted as part of the 1989 RI/FS indicated that if, in the unlikely event that the groundwater were used as a source of drinking water, the Site posed unacceptable risks to human health and the environment. The risk assessment was based on a worst case total lifetime exposure to maximum organic concentrations at an assumed constant rate (drinking 2 liters of water daily for 30 years in an adult, living to the age of 70 years). Utilizing the data from the 1995 and 1996 sampling events, it was determined that the total cancer risk for the future-use scenario was 1×10^{-5} (i.e., one-in-one-hundred thousand), which is within EPA's acceptable cancer risk range.

To assess the overall potential for noncarcinogenic effects posed by more than one contaminant, EPA has developed a hazard index (HI). This index measures the assumed exposures to several chemicals simultaneously at low concentrations which could result in an adverse health effect. When the HI exceeds one, there may be concern for potential noncarcinogenic effects. The 1989 OU1 RI/FS calculated the HI under a worst case scenario for cadmium and chromium as 22.8 and 170, respectively. However, the significant decrease in contaminant levels over the past several years has resulted in a significant decrease in associated risk levels. Under present conditions, using the sampling data from 1995 and 1996, the recalculated HI for cadmium and chromium is 2.2 and 0.06, respectively.

The significant noncarcinogenic risk from potential future consumption of the Upper Glacial Aquifer because of the previous high incidence of cadmium and chromium contamination no longer exists. The HI is currently only slightly above the acceptable HI of 1 because of the presence of cadmium. Furthermore, any risk is associated with an unlikely future-use scenario, since the Upper Glacial Aquifer is not used as a drinking water supply.

REMEDIAL ACTION OBJECTIVES

Remedial action objectives are specific goals to protect human health and the environment. These objectives are based on available information and standards such as applicable or relevant and appropriate requirements (ARARs) and risk-based levels established in the risk assessment.

The objective of the OU1 feasibility study was to identify and evaluate a cost-effective remedial action alternative which would minimize the risk to public health and the environment resulting from groundwater contamination at the Site. The FS report had evaluated in detail 7 remedial alternatives for addressing the contamination associated with the Site. The remedy which EPA selected included extraction and treatment of contaminated groundwater.

Given the significant decrease in site-related groundwater contaminant levels over the past several years, EPA has reevaluated the groundwater extraction and treatment remedy specified in the 1989 OU1 ROD. The remedial action objectives for the groundwater remedy are to (1) protect human health by ensuring future residents are not exposed to contaminated groundwater, and (2) reduce groundwater contamination levels to drinking water standards.

SUMMARY OF REMEDIAL ALTERNATIVES

CERCLA requires that each selected site remedy be protective of human health and the environment, be cost-effective, comply with other statutory laws, and utilize permanent solutions and alternative treatment technologies and resource recovery alternatives to the maximum extent practicable. In addition, the statute includes a preference for the use of treatment as a principal element for the reduction of toxicity, mobility, or volume of the hazardous substances.

The alternatives for addressing groundwater contamination are provided below and are identified as GW-1 and GW-2. Consistent with ROD amendment guidance, the components of the original remedy (described below as Alternative GW-2) which has been proposed for amendment have been updated and are being compared to a newly designed Alternative, GW-1, which was developed based upon existing Site conditions, including the groundwater monitoring data presented above.

Alternative GW-1 - No Further Action/Natural Attenuation

Capital Cost:	$0
O & M Cost:	$5000/year (for 5 years)
Present Worth Cost:	$19,588
Time to Implement:	immediate

This alternative does not include active treatment of the aquifer; it relies upon natural attenuation to reduce the contamination below federal and state drinking water stan-

dards and/or groundwater quality standards. A monitoring program would be implemented on an annual basis to demonstrate the effectiveness of the naturally occurring mechanisms. Since contaminants will remain on the Site above health-based risk levels, EPA will conduct a five-year review to ensure that the remedy is protective of human health and the environment. If the natural attenuation of contaminants in the groundwater at the Site has not improved groundwater quality to federal drinking water standards and state drinking water and groundwater standards, EPA and NYSDEC will reevaluate the need for an active treatment at the Site.

Alternative GW-2: Extraction/Precipitation of Divalent Metals/Ion Exchange/Activated Carbon/Reinjection

Capital Cost:	$1,923,900
O & M Cost:	$ 920,900
Present Worth Cost:	$ 9,327,400
Time to Implement:	1 Year

This alternative consists of the extraction and on-site treatment of contaminated groundwater. Groundwater would be extracted from one on-site collection well. The extracted groundwater would first go through a 2-stage precipitation and clarification/filtration unit for the removal of divalent metals, followed by an ion exchange process for the removal of the chromate ion, and if necessary, a carbon adsorption unit for removal of volatile organic compounds. The metals treatment would generate hazardous waste residuals requiring ultimate disposal in a Resource, Conservation and Recovery Act Subtitle C facility. The treatment scheme is a proven technology capable of removing the contaminants of concern from the groundwater. The extracted groundwater would be treated to satisfy all federal and state standards for Class IIb waters, i.e., potential drinking waters, prior to reinjection. The treated groundwater would be discharged to a reinjection well installed east of the Site and upgradient of both the extraction well and former leaching pits. In order to evaluate the effectiveness of this remedial action, periodic sampling for metal and volatile organic concentrations in the groundwater would be required prior to reinjection.

EVALUATION OF ALTERNATIVES

During the detailed evaluation of remedial alternatives, each alternative is assessed against nine evaluation criteria set forth in Federal Regulation. The nine criteria are overall protection of human health and the environment, compliance with applicable or relevant and appropriate requirements, long-term effectiveness and permanence, reduction of toxicity, mobility, or volume, short-term effectiveness, implementability, cost, and state and community acceptance.

The evaluation criteria are described below.

- Overall protection of human health and the environment addresses whether or not a remedy provides adequate protection and describes how risks posed through each pathway are eliminated, reduced, or controlled through treatment, engineering controls, or institutional controls.

- Compliance with applicable or relevant and appropriate requirements addresses whether a remedy will meet the applicable or relevant and appropriate requirements of other federal and state environmental statutes and requirements or provide grounds for invoking a waiver.

- Long-term effectiveness and permanence refers to the ability of a remedy to maintain reliable protection of human health and the environment over time, once cleanup goals have been met.

- Reduction of toxicity, mobility, or volume through treatment is the anticipated performance of the treatment technologies that a remedy may employ.

- Short-term effectiveness addresses the period of time needed to achieve protection and any adverse impacts on human health and the environment that may be posed during the construction and implementation period until cleanup goals are achieved.

- Implementability is the technical and administrative feasibility of a remedy, including the availability of materials and services needed to implement a particular option.

- Cost includes estimated capital and operation and maintenance costs, and net present worth costs.

- State acceptance indicates whether, based on its review of the RI/FS reports and Post-Decision Proposed Plan, the state concurs, opposes, or has no comment on the preferred alternative at the present time.

- Community acceptance will be assessed in the Record of Decision (ROD) following a review of the public comments received on the RI/FS reports and the Post-Decision Proposed Plan.

A comparative analysis of these alternatives based upon the evaluation criteria noted above follows.

- Overall Protection of Human Health and the Environment

Both Alternatives are similar in their abilities to protect human health and the environment. As noted above in the risk assessment section, there are no current use risks associated with the contamination at the Site. The Site groundwater is not being used as a source of drinking water. In addition, no significant impacts to ecological

receptors have been observed. The future use carcinogenic risks at the Site are within EPA's risk range, and the noncarcinogenic risks are just slightly above EPA's acceptable level; however, these risks assume that the Site groundwater will be utilized as a potable water supply, an event that is highly unlikely.

As there are no current or anticipated future users of the Site groundwater and since the levels of contaminants in the groundwater have decreased dramatically in the last few years and are expected to drop below drinking water and groundwater quality standards in the future, EPA believes that both GW-2 and GW-1 would provide full protection of human health and the environment.

Compliance with ARARs

Since the impacted groundwater underlying the Site is a potential future source of drinking water, federal and state drinking water standards, as well as state groundwater quality standards, are ARARs. For Alternative GW-1, ARARs would be achieved over time through natural attenuation; compliance with ARARs would be demonstrated through an annual monitoring program. For Alternative GW-2, compliance with ARARs for the aquifer would be achieved through extraction and active treatment for removal of metals. The treated groundwater would meet appropriate standards prior to being reinjected. Residual sludges from the treatment system would be treated and disposed of in accordance with RCRA regulations.

Long-Term Effectiveness and Permanence

Alternative GW-1 is expected, over time, to provide the same level of long-term effectiveness and permanence as Alternative GW-2. Alternative GW-2 would potentially result in greater long-term exposure to contaminants by workers who would come into contact with the concentrated sludges from the treatment system. However, proper health and safety precautions would minimize any adverse impacts through treatment.

- Reduction in Toxicity, Mobility or Volume Through Treatment

Alternative GW-2 would reduce the toxicity, mobility and volume of contaminated groundwater through extraction and subsequent treatment. Alternative GW-2 would potentially achieve this reduction in a shorter timeframe than Alternative GW-1, which relies solely on natural attenuation, and does not actively reduce the toxicity, mobility or volume of contaminants in the groundwater.

- Short-term Effectiveness

Although GW-2 would potentially achieve cleanup goals in a shorter time-frame than GW-1, this is not expected to be significant. This is supported by the fact that groundwater contaminant levels have decreased so significantly over the past several years.

Alternative GW-1 presents virtually no short-term impacts to human health and the environment since no construction is involved. The construction activities required to implement Alternative GW-2 would have potentially negative impacts on site workers and nearby residents. While efforts would be made to minimize these impacts, some disturbances would result from disruption of traffic, excavation activities on public and private land, noise, and fugitive dust emissions. It is estimated that the construction activities for Alternative GW-2 would take approximately 12 months to complete.

- Implementability

The technologies proposed for extraction and treatment of contaminated groundwater in Alternative GW-2 are proven and reliable in achieving the specified cleanup goals, however, Alternative GW-2 would be much more complex than Alternative GW-1 to implement. Alternative GW-1 does not involve any construction and is much easier to implement as it only requires a monitoring program utilizing existing monitoring wells.

- Cost

Alternative GW-1 has no direct costs associated with its implementation. The present worth of this alternative of $19,588 is for implementation of an annual groundwater monitoring program for a duration of 5 years. The capital and present worth costs of Alternative GW-2 are estimated to be approximately $1,923,900 and $9,327,400, respectively.

- State Acceptance

The State of New York concurs on the proposed modified remedy.

- Community Acceptance

Community acceptance of the preferred alternative will be assessed in the ROD amendment following review of the public comments received on this Post-Decision Proposed Plan.

PREFERRED ALTERNATIVE

Based upon an evaluation of the various alternatives, EPA and NYSDEC recommend Alternative GW-1, No Further Action/Natural Attenuation.

The Post-Decision preferred alternative provides the best balance of trade-offs between alternatives with respect to the evaluating criteria. EPA and the NYSDEC believe that the preferred alternative will be protective of human health and the environment, will comply with ARARs, will be cost-effective, and will utilize permanent solutions and alternative treatment technologies or resource recovery technologies to the maximum extent practicable.

APPENDIX B

PUBLIC NOTICE

Public Meeting

The U.S. Environmental Protection Agency will hold a public meeting on the Post-Decision Proposed Plan for the **Preferred Plating Superfund Site** in Farmingdale, New York. Based on samples collected after the cleanup of site soil, EPA is proposing to modify the original groundwater remedy chosen for this site in 1989 to no further action/ natural attenuation. The new proposed cleanup plan will be protective of human health and the environment.

Public Meeting
Thursday, August 7, 1997
7:00 p.m. - 9:00 p.m.
W.E. Howitt Junior High School
Vancott & Grant Avenues
Farmingdale, New York

A 30-day public comment period begins July 31, 1997 and ends August 30, 1997. All written/oral comments may be submitted by August 29 to: Janet Cappelli, Project Manager, U.S. EPA, 290 Broadway, 20th Fl., New York, NY 10007 or call (212) 637-4270.

Copies of the Post-Decision Proposed Plan are available for review at the Babylon Town Hall and the West Babylon Library.

For more information, contact Cecilia Echols
U.S. EPA Community Involvement Coordinator
1-800-346-5009

Public Meeting

The U.S. Environmental Protection Agency will hold a public meeting on the Post-Decision Proposed Plan for the **Preferred Plating Superfund Site** in Farmingdale, New York. Based on samples collected after the cleanup of site soil, EPA is proposing to modify the original groundwater remedy chosen for this site in 1989 to no further action/ natural attenuation. The new proposed cleanup plan will be protective of human health and the environment.

Public Meeting
Thursday, August 7, 1997
7:00 p.m. - 9:00 p.m.
W.E. Howitt Junior High School
Vancott & Grant Avenues
Farmingdale, New York

A 30-day public comment period begins July 31, 1997 and ends August 30, 1997. All written/oral comments may be submitted by August 29 to: Janet Cappelli, Project Manager, U.S. EPA, 290 Broadway, 20th Fl., New York, NY 10007 or call (212) 637-4270.

Copies of the Post-Decision Proposed Plan are available for review at the Babylon Town Hall and the West Babylon Library.

For more information, contact Cecilia Echols
U.S. EPA Community Involvement Coordinator
1-800-346-5009

"Farmingdale Observer" August 1, 1997 and August 8, 1997

APPENDIX C

AUGUST 7, 1997 PUBLIC MEETING ATTENDANCE SHEET

UNITED STATES ENVIRONMENTAL PROTECTION AGENCY
REGION II
Public Meeting
Preferred Plating Superfund Site
Farmingdale, New York

Thursday, August 7, 1997
ATTENDEES

(Please Print Clearly)

	NAME	STREET	CITY	ZIP	PHONE	REPRESENTING
✓	Sy Robbins	40 Main St.	Setauket, NY	11733	853-3156	Suffolk Health Services
✓	BRIAN ZITANI	281 Phelps La.	N. BABYLON	11703	422-7640	TOWN OF BABYLON
	J. Rosmann	Box 30	Syosset	11791	364-3030	

APPENDIX D

AUGUST 7, 1997 PUBLIC MEETING TRANSCRIPT

UNITED STATES ENVIRONMENTAL PROTECTION AGENCY
REGION II

----------X

Public Meeting - Post-Decision Proposed Plan
for the Preferred Plating Corporation Superfund Site
Farmingdale, New York

----------X

August 7, 1997
7:00 p.m.

W. E. Howitt Jr. High School
Vancott and Grant Avenues
Farmingdale, New York

P R E S E N T:

Introduction — Cecilia Echols
Community Involvement Coordinator
U.S. EPA, Region 2

Superfund Overview — Doug Garbarini
Superfund Section Chief
Eastern NY Section
U.S. EPA, Region 2

Site Background — Janet Cappelli
Remedial Project Manager
U.S. EPA, Region 2

MS. ECHOLS: Good evening, I'm Cecilia Echols and I'm the Community Involvement Coordinator for the Preferred Plating Corporation Superfund Site. We are here to discuss the Post-Decision Proposed Plan for the site. This Proposed Plan is to modify the original groundwater remedy that was chosen back in 1989.

We have on our agenda today, Doug Garbarini, who will give an overview of the Superfund process; and Janet Cappelli, she will give an overview of the site background, a summary of groundwater sampling activities and the proposed amended remedy.

After everyone's presentation, we will open up for questions and answers and then we shall close. And here's Doug.

MR. GARBARINI: Since everybody who is in the audience really knows the Superfund process pretty well, I'm not going to spend the time giving an

overview of the Superfund process or outline any history of the process.

Unless there are any objections. I think Jefry will hear this again Monday night.

If there are no objections, I'll just turn it over to Janet.

MS. CAPPELLI: I'll show you my overheads.

I think everybody here knows a lot about the site, so I think I can skip most of the background. Let me put up the chronology of events and refresh everyone's memory.

Preferred is a pretty small site, it is just under an acre, on Allen Boulevard, just off of Route 110. It is in pretty much a light industrial commercial area. The residential section starts about a third of a mile southwest of the site.

Preferred began operating back in 1951, using mainly cadmium and chromium in their process. The wastewater was

discharged to four concrete underground pits, sort of constructed like a swimming pool, below ground swimming pool, behind the old building.

Allen Boulevard is down at the bottom. The old building ended pretty much right around here (indicating), and here is where the four pits were below the ground, that is where they discharged.

Back starting in 1953, the county health department started sampling the sludges in those pits and also some local wells, and started to find a problem with elevated levels of metals. Between 1953 up to 1976, until Preferred closed, they had numerous violations that the county tried to get them to clean up the sludges in those pits. They did some sort of remediation with the sludge that was left in the pits. However, the pits themselves were cracked and leaking into the underlying soils and groundwater.

In 1983, the state came in through the Department of Environmental Conservation, and started to investigate the site and recommended that it be added to the National Priorities List, which is our listing of Superfund sites. In 1984, it was added to the NPL and that sort of kicked off EPA's official involvement in the site.

The site itself has been, over the years, split up into three separate operable units:

The first operable unit dealt with off-site and downgradient groundwater investigation. A ROD that selected a pump and treat remedy based on data that showed pretty high levels of cadmium and mostly chromium, was selected back in 1989. The design for that pump and treat system was completed in 1992.

In the meantime, we had begun our second operable unit, which concentrated on the source for the groundwater

1
2 contamination, which by this time the
3 property owners, the property had been
4 sold. Preferred went out of business,
5 the new property owners had extended the
6 building.
7 So now those four underground
8 pits were covered by a building. So the
9 second operable unit focused on soils
10 that were inside of those pits, plus the
11 soils that were beneath the pits before
12 the water table. The ROD for that site,
13 for the second operable unit, was issued
14 in 1992. That selected excavation and
15 off-site disposal for the source area.
16 We decided, because the site is
17 pretty small, we decided that we
18 couldn't do both construction activities
19 at the same time, there really wasn't
20 enough space. Since it made more sense
21 to get the source out of there before we
22 started to do any kind of pump and
23 treat, we put in the remedial design, we
24 finished that, we put that on hold,
25 implementation of that, for the

1
2 groundwater system.
3 And we waited until the
4 remediation of the source area was
5 completed. And that happened about
6 1994. We ended up taking about 1,500
7 tons of materials out from that site.
8 While this was going on, we also
9 started another operable unit, which was
10 No. 3. That investigated what we
11 thought might have been a possible
12 source of upgradient groundwater
13 contamination, dealing with the Del Lab
14 that was north of the site. It was
15 found that there was no problem there
16 contributing to groundwater
17 contamination. Del Lab was taking care
18 of the well water that was on site, they
19 weren't adding to the groundwater
20 problem, there was no ROD that was
21 issued in 1993.
22 During this whole time that the
23 implementation was put on hold, we kept
24 sampling the groundwater. We have nine
25 monitoring wells that are on the site

itself. We also have two monitoring wells that are off the site.

I'll move this around so you can see it. We have a cluster at the southern end, a single small shallow well, and shallow wells in the middle of the property. And going up to the north, we have a cluster of shallow and deep.

We also have two off-site wells, one is about a quarter of a mile south to southeast of the site, where the old Army Nike base was. The other one is about a half mile south to southwest just off of the the Southern State Parkway. Those two are deep wells. They are 70 feet deep, they are at the bottom of the Upper Glacial.

We have seven rounds of data. The original RI/FS for OU1 had two rounds from August and September of 1988. The round in February of 1991, we collected as part of our treatability study, while we were doing the design

for the groundwater pump and treat system.

We then collected a round right before the remediation of the source area started, in 1993. We collected another round after that was finished, in 1994. As you can see, for the cadmium and the chromium, we started seeing a pretty dramatic decrease in the concentrations. At that point, we decided that instead of going forward with the groundwater pump and treat system, we wanted to collect a couple rounds of more samples to see if that decrease was going to continue. And at that point, then we would reevaluate the data.

Which brings us through April of 1995 and August of 1996, which is when we reevaluated the data and basically came up with this conclusion which we've documented in this Post-Decision Proposed Plan, that we no longer think the pump and treat is necessary because

of the significant decrease in the concentrations for cadmium and chromium. Lead and nickel pretty much in the last four and five rounds of sampling, have always been coming up as non-detect.

In the original OU RI/FS back in 1988, lead and nickel were in there also as contaminants of concern, but to a much lesser extent than cadmium and chromium. Those have been our two big players all along. Chromium as it stands now at 57, is below the drinking water standard of 100, although slightly above the New York State Groundwater Quality Standard, which is still at 50.

The cadmium, though, is above the drinking water standard, which is 10. But it has come down on an order of magnitude from a high of 399, along with the decrease in the concentrations, the risk number, the associated non-carcinogenic risk for metals, has also decreased significantly. Right now, we use a Hazard Index for

1

2 non-carcinogenic risk. When the Hazard
3 Index goes above 1.0, we consider there
4 to be a problem.
5 In the past, the numbers for
6 cadmium and chromium were 22, and I
7 think chromium at the time was 170.
8 Right now the Hazard Index for chromium
9 is below 1.0, it is 0.6. And for
10 cadmium, it is a little bit above one,
11 it is 2.2.
12 MR. ROBBINS: I presume these are
13 maximum values.
14 MS. CAPPELLI: These are the
15 maximum values. For the last round,
16 cadmium is Well No. 5. I'll have to
17 pull out the data for you, Five is at
18 the southern end of the property, down
19 here. You see that right there.
20 And the chromium, I'll check on,
21 I think it was from Well No. 3, which
22 was more to the side.
23 That Hazard Index value for
24 cadmium now is at 2.2. When we
25 originally calculated it back in 1988,

for the first two rounds in the first issuance of the ROD, it was 22. So it has come down an order of magnitude.

Basically, based on this data coupled with the risk assessment, which again you have to remember, that the risk assessment is only based on a future use scenario. For a current use, there is no risk. For a future use, that a resident would be drinking this over a 70 year lifetime, that is where you get the Hazard Index value of that 2.2, which is a pretty unlikely scenario, that we would have somebody drinking the Upper Glacial for that length of time.

MR. GARBARINI: I think it is probably 30 years of exposure over a 70 year lifetime.

MS. CAPPELLI: I'm sorry, it is. Drinking two liters of water a day. So the risk numbers coupled with this data is what prompted us to reevaluate the system, the groundwater pump and treat

system, and to issue this Post-Decision Proposed Plan. As part of the remedy that we are proposing, we would continue annual monitoring.

We have, under the Superfund Program, we need to reevaluate the site over a five year period. So we are proposing to do the annual monitoring for the five years, and then at that point do our five year review and compare it, in case the MCLs have changed, compare it to see whether the concentrations have increased, decreased, or whether natural attenuation will add to the scenario and bring the levels down lower.

Based on this, we really didn't feel that a full-blown pump and treat was necessary for this problem.

That is basically my presentation.

MS. ECHOLS: Do you have any questions? State your name, sir.

MR. ROBBINS: Sy Robbins, I'm

from the Suffolk County Department of Health Services. One question that might arise, is concentrations at the site have decreased. Is it possible that this contamination has moved?

MS. CAPPELLI: We have looked at our downgradient wells. One well in the Nike base in the last couple of years has been removed. So we have sampling, I believe for 1991 and 1993, that had non-detect for both cadmium and chromium in it. The other well, which is further, a half mile south to southwest, which was off of the Southern State Parkway, that one we've still been sampling that was part of the last sampling round, and that always has been nondetectable.

MR. ROBBINS: Do you have a graphic that shows the location of those two wells?

MS. CAPPELLI: I don't have anything that great. I can point out where they are?

Here is the old Army Nike base. Our first deep well off-site was here, that was the one that was a quarter of a mile away. And that is between 60 to 70 feet.

The next well is down right off the easement of the Southern State Parkway. So we are about a half mile at that point. And that also is screened 60 to 70. That was a little deeper. The wells that are on-site, the shallows, are screened between 10 and 25 feet.

The deep wells that are on-site, there are two deep wells, those are screened at 40 to 60.

MR. ROBBINS: From land surface or from the water table.

MS. CAPPELLI: From below grade.

MR. ROBBINS: Now, both those downgradient wells are aligned with the assumption that groundwater below is in a south southwesterly direction.

MS. CAPPELLI: The one that is

closer to the site that is on the old Army Nike base was put in a more south, southeast. The one that is off of the Southern State Parkway was put in more south southwest. Because at the time, we were using those wells also to try to determine which way the flow was going. So we put them off side-gradient a little bit.

MR. ROBBINS: And the periodic monitoring that you are going to do, and review of the data, is that strictly on the basis of the well that you've shown us the results from? Or if additional data came in, would that have to be considered also.

MS. CAPPELLI: I think we would consider additional data also if there were wells that we could also sample from, we could include that in our sampling data base, include those wells.

MR. GARBARINI: We would consider any data you might have.

MS. CAPPELLI: The one well that

is at the Faber's office building, we could include that.

MR. GARBARINI: We are required to do a five year review by the statute. If the level of contaminants are above health risk levels, until they drop below. We could even do the reviews before five years. But we have to do it in five. Whenever we take samples, we'll do some sort of evaluation at that part.

MS. CAPPELLI: The first round for annual monitoring would begin this fall.

MS. ECHOLS: Anymore questions? Sir, go ahead. State your name.

MR. ROSMARIN: Jefry Rosmarin. I was curious, what was the size of the plume?

MS. CAPPELLI: We haven't documented a plume leaving the site. The off-site wells have always turned out nothing above health base levels.

MR. GARBARINI: We actually

designed a groundwater remedy for the site. Maybe you can just touch on that.

MS. CAPPELLI: We did. When we selected the Record of Decision in 1989, when we chose the pump and treat, we actually went ahead and did the entire design. It is complete. The capture zone basically for that pump and treat, only went to the southern edge of the property boundary. It would probably extend a little bit more, but we designed it just to go where we were finding our contaminant levels. That design was approved by the state, as well as the EPA.

MR. ROSMARIN: The search for the source of the upgradient contamination is?

MS. CAPPELLI: We began that because our upgradient cluster on our site property, had some hits that we thought were too high to serve as background. So we looked north of us, and we found a manufacturing facility

who had some wastewater in pits on their facility. So we thought that we had enough reason to look there. They put in a host of monitoring wells. There is an empty wooded lot about an acre in size between our site and their manufacturing facility. They put in a host of wells, and they did not find anything.

At the same time, the county was working with them, I believe, on their own facility. And they were taking care of some problems that they had.

MR. ROBBINS: They were remediating the cesspools, this is Del Labs, on their property. I don't know if it was under consent order or whether it was voluntary.

MS. CAPPELLI: I believe there was a consent order.

MR. ROBBINS: You represented the data collected by Del Labs as indicating there wasn't contamination of groundwater.

I think it did indicate contamination of groundwater.

MS. CAPPELLI: It probably had organics, but we were looking in terms of heavy metals. We found heavy metals in our upgradient wells, which we assumed couldn't be from our source area.

MR. ROBBINS: There were metals above background in some of their wells, nothing to indicate remediation, nothing to indicate a continuing source on their site. But it certainly could have been indicative of prior discharges that might have moved on.

MS. CAPPELLI: Something that came off of their property, and that is what we picked up. We pretty much went ahead with that operable unit, because we knew that we would be designing a groundwater pump and treat. And if there was a problem coming onto our site, we needed to know about that and make sure that we could capture that and

bring it into our treatment system.

MR. ROSMARIN: Is this an orphan site?

MS. CAPPELLI: An orphan site?

MR. GARBARINI: No. The PRP's actually implemented the soil remedy.

MS. CAPPELLI: Second operable unit.

MR. ROSMARIN: Who are the PRPs?

MS. CAPPELLI: Joseph Gazza (ph)and George Paro (ph), current owners of the site, bought the property in 1976, so they were not part of Preferred Plating. They sort of walked into a problem, unfortunately. But they did step in and under -- is it in a unilateral order?

MR. GARBARINI: Downgradient there is some overlap. They are the owners, but there is some overlap.

MS. CAPPELLI: Yes, there was a short period of time after they bought the property and Preferred wasn't totally out yet, so they actually leased

back to Preferred for some time.

MR. GARBARINI: It was a unilateral order, but it was something sort of negotiated. They were very cooperative. It worked out that we were going to implement the remedy quicker if it were a unilateral order.

MR. ROSMARIN: But they paid for the remedy.

MS. CAPPELLI: They paid for the soil.

MR. ROSMARIN: The soil and the studies, the studies to do groundwater pump and treat.

MS. CAPPELLI: No, that was under EPA, funded by the EPA.

MR. ROSMARIN: By the Superfund.

MR. GARBARINI: Yes.

MR. ROSMARIN: And there was no attempt to recover from the property owners?

MR. GARBARINI: We haven't closed out the case yet.

MS. CAPPELLI: This is still with

our regional counsel. The decision hasn't been made whether or not we are going to pursue that.

MR. ROBBINS: The remediation of the waste pits, did that involve dismantling part of the building?

MS. CAPPELLI: Yes, actually the middle section of the building pretty much from here to here, this whole section of the building was torn down, because there was no way to get to those pits without taking the middle part of that building down. So that is what they did. And we went to visit it, actually it has since been put up exactly the way it was before.

MR. ROBBINS: Just for the record, the statements in the Proposed Action Plan, will be -- relative to the availability or the use of public water at all downgradient locations, will be modified reflecting there are some, and maybe some additional downgradient wells in use.

MS. CAPPELLI: It will be modified in terms of the Record of Decision. If you submit that as a comment, we'll respond to it in the Responsiveness Summary section, which is an appendix to the Record of Decision, and we'll make sure that it is reflected correctly within the text of the Record of Decision. Pretty much, this document is now a public document. So if there is something that is wrong in this, that is how we will correct it, through the Responsiveness Summary.

MR. ROSMARIN: I'm a little confused. The pits were underneath the buildings and then Preferred Plating at some point moved out.

So how did the contaminants leach into the soil without rainwater.

MS. CAPPELLI: The old building right here where you see the indentation going in? This is where Preferred Plating's building ends.

Pipes went out of the buildings,

1

2 and discharged into those pits that look
3 like a swimming pool, they are level
4 with the ground, and went down about 10
5 feet into the ground. They had baffles
6 built into them. They were actually
7 sectioned off into four quadrants.
8 After -- Preferred Plating did some kind
9 of remediation of the sludge material
10 that was left in those pits, but nobody
11 ever went underneath the pits.
12 The pits had been cracked and
13 leaking so nothing ever was done about
14 the soils that were underneath the pits
15 before you encountered the water.
16 When the new owners came in, not
17 knowing really, I guess, about the
18 problem, filled in those pits and
19 decided to extend the building. Now we
20 have the situation where we knew the
21 pits were there, but access to them was
22 pretty hard.
23 MR. GARBARINI: The other problem
24 too is similar to what we have been
25 talking about a couple of years ago at

1
2 Liberty, actually. The fluctuation in
3 the groundwater table would result in
4 some of those contaminants that were
5 below the pits, again contacting the
6 groundwater and then moving out.
7 MR. ROSMARIN: Assuming they were
8 in the saturated season and assuming
9 that what is happening in Nassau County
10 isn't happening in Suffolk County, which
11 is that the fluctuations in groundwater
12 are off by over 5 feet these days.
13 MR. GARBARINI: This is back in
14 1992.
15 MS. CAPPELLI: We measured that
16 too through historical data, and data we
17 found. The measurable water table was
18 anywhere from 10 to 18 feet. the pits
19 were about 10 feet down. During pretty
20 wet seasons, the water table was
21 actually encountering the bottom of
22 those pits. If they had been leaking,
23 they were going into the soils below the
24 bottom of the pits.
25 MR. GARBARINI: I think I know

this a little better than you do.

The situation wasn't the same necessarily. In the last few years, noticed a much larger difference in the groundwater fluctuation. So there was still some contact, we believe there to be some contact of the groundwater with the contaminants that were just below the leaching pits themselves. That is why we needed to go in and remove the soils.

MS. ECHOLS: Brian, do you have any questions?

MR. ZITANI: Brian Zitani, Town of Babylon. Out of curiosity, since the initial studies didn't seem to indicate that there was a plume migrating off-site, and after the remediation of the soils, with the removal, is it unusual that the numbers should drop so quickly since it doesn't appear to be that much material moving through the site?

MS. CAPPELLI: There is a part

that you asked me to include, and I forgot to mention.

Part of the reason for that, I don't really think that the source removal brought the levels down that dramatically on its own. In the last two rounds of our sampling, we started to use a technique which we pretty much commonly use now when we are sampling for metals, using a low-flow pump to get the turbidity down. Pretty much we are seeing a big decrease in metals concentration. I went back and checked the turbidity samples for the previous sample round. We usually try to get them below 50 NTUs. They were pretty high, in the hundreds, some of them.

I think that is really more of a reason.

MR. ZITANI: Methodology change that brought the number down.

MS. CAPPELLI: The first two rounds are not representative of what was there. If we had that low-flow

1

2 technique -- because this next round,
3 you see the decrease here, the source
4 was still there. Those pits weren't
5 remediated yet, and that is still quite
6 a drop from the original round of
7 sampling. It might have something to do
8 with the water table fluctuations, if it
9 was a wet season, carrying more down
10 with it. But I think the low-flow
11 technique really gave us a much truer
12 reading of what was in that water.
13 MS. ECHOLS: Any more questions?
14 MS. CAPPELLI: The comment period
15 goes until August 30th. If you want to
16 jot down my phone number, my address,
17 you can write with any comments, that's
18 fine. If you want to call with any
19 comments, it is 212, 637, 4270. And the
20 comments will all be responded to in the
21 appendix to the Record of Decision that
22 we call the Responsiveness Summary
23 Section.
24 MR. ROBBINS: I will send you
25 copies of the private well samples that

1
2 we took in the area of the survey.
3 MS. CAPPELLI: I appreciate that.
4 MS. ECHOLS: If you want to reach
5 me, there is an 800 number you can reach
6 me at.
7 MS. CAPPELLI: Thank you very
8 much.
9 MS. ECHOLS: Thank you for
10 coming.
11 (Whereupon, at 7:41 p.m., the
12 proceedings were adjourned)
13
14
15
16
17
18
19
20
21
22
23
24
25

1

2 C E R T I F I C A T E

3 STATE OF NEW YORK)
) ss.
4 COUNTY OF SUFFOLK)

5 I, JENNIFER MAUE, a Registered
6 Professional Reporter, do hereby certify
7 that the foregoing Matter, taken at the
8 time and place aforesaid, is a true and
9 correct transcription of my shorthand
10 notes.
11 I further certify that I am
12 neither counsel for nor related to any
13 party to said action, nor in any wise
14 interested in the result or outcome
15 thereof.
16 IN WITNESS WHEREOF, I have
17 hereunto set my hand this 11th day of
18 August, 1997.
19
20
21
22
23 JENNIFER MAUE
24
25

APPENDIX IV

Table of Groundwater Sampling Data

GROUNDWATER SAMPLING DATA

MAXIMUM CONTAMINANT LEVELS (ppb)

DATE OF SAMPLING	CADMIUM	CHROMIUM
AUGUST 1988	399	5850
SEPTEMBER 1988	348	3390
FEBRUARY 1991	254	1850
AUGUST 1993	123	560
JULY 1994	136	1630 *(35 FILT)*
APRIL 1995	43	83
AUGUST 1996	60	57

Appendix V

1989 Record of Decision

DECLARATION FOR THE RECORD OF DECISION

SITE NAME AND LOCATION

Preferred Plating Corporation, Farmingdale, Suffolk County, New York

STATEMENT OF BASIS AND PURPOSE

This decision document presents the selected remedial action for the Preferred Plating Corporation Site developed in accordance with the Comprehensive Environmental Response, Compensation, and Liability Act, 42 USC § 9601, et seq., and to the extent applicable, the National Oil and Hazardous Substances Pollution Contingency Plan , 40 CFR Part 300. This decision is based on the administrative record for the Site. The attached index identifies the items that comprise the administrative record upon which the selection of the remedial action is based.

The State of New York has concurred with the selected remedy.

ASSESSMENT OF THE SITE

Actual or threatened releases of hazardous substances from this Site, if not addressed by implementing the response action selected in this Record of Decision, may present an imminent and substantial endangerment to public health, welfare, or the environment.

DESCRIPTION OF SELECTED REMEDY

This operable unit represents the first of two planned for the Site. It addresses the treatment of ground water contaminated primarily with heavy metals and volatile organics. The second operable unit will involve the continued study and possible remediation of soils located beneath the building on the Site if the study so indicates. These soils could not be adequately characterized during the first operable unit. The second operable unit will also investigate potential sources of upgradient contamination.

The major components of the selected remedy include:

- Extraction and treatment, via metal precipitation, ion exchange, and activated carbon, of ground water in the Upper Glacial Aquifer to restore the ground water quality to cleanup levels identified in the decision summary; and

- Disposal of treatment residuals at a RCRA subtitle C facility.

Treatability studies will be undertaken to confirm the effectiveness of the selected remedy. If these studies indicate that the ion exchange process used in the selected remedy is ineffective in reducing the chromate ion to the required levels, a contingency remedy, which utilizes a separate precipitation unit for the removal of the chromate ion, will be implemented.

STATUTORY DETERMINATIONS

Both the selected remedy and the contingency remedy are protective of human health and the environment and are cost-effective. The total remedial action, consisting of both this first operable unit and a future second operable unit, when fully completed will comply with Federal and State requirements that are legally applicable or relevant and appropriate. Both the selected remedy and the contingency remedy utilize permanent solutions and alternative treatment technologies to the maximum extent practicable and satisfy the statutory preference for remedies that employ treatment that reduce toxicity, mobility, or volume as a principal element. Due to the existence of an upgradient source area, neither the selected nor the contingency remedy, by itself, will meet chemical-specific ARARs and be capable of restoring the area ground water to applicable ground water quality standards until that upgradient source area is removed. The upgradient source area will be addressed as part of the second operable unit. Although the remedial action selected, the first operable unit, will not meet chemical-specific ARARs, it is only part of a total remedial action that will attain clean-up levels when fully completed. In the event the second operable unit fails to identify or control the source area, a waiver for technical impracticability will be sought.

The need for conducting a five-year review will be evaluated upon completion of the second operable unit.

William J. Muszynski, P.E.
Acting Regional Administrator

9-22-89
Date

DECISION SUMMARY

PREFERRED PLATING CORPORATION

FARMINGDALE, NEW YORK

UNITED STATES ENVIRONMENTAL PROTECTION AGENCY

REGION II

NEW YORK

TABLE OF CONTENTS

SECTION	PAGE
I. Site Location and Description	1
II. Site History and Enforcement Activities	2
III. Community Relations History	3
IV. Scope and Role of Operable Unit Within Site Strategy	3
V. Summary of Site Characteristics	4
VI. Documentation of Significant Changes	5
VII. Summary of Site Risks	5
VIII. Description of Alternatives	6
IX. Summary of Comparative Analysis of Alternatives	10
X. Selected Remedy	13
XI. Statutory Determinations	14

ATTACHMENTS

Appendix I - Figures
Appendix II - Tables
Appendix III - Adminstrative Record Index
Appendix IV - NYSDEC Letter of Concurrence
Appendix V - Responsiveness Summary

SITE LOCATION AND DESCRIPTION

The Preferred Plating Corporation Site (the "Site") is located at 32 Allen Boulevard in Farmingdale, Town of Babylon, Suffolk County, New York. This 0.5-acre Site is situated in a light industrial area approximately 1 mile west of the Nassau-Suffolk County border. Route 110 passes just west of the Site (see Figure 1).

The land to the east and west of the Site is occupied by commercial or light industrial properties. Immediately north of the Site is a large wooded area followed by various industrial facilities further north of that. To the south are a residential community and a U.S. Army facility.

The 1980 census records a population of greater than 10,000 within a 3 mile radius of the Site. The population density in the area is estimated to be 3,000 to 6,000 persons per square mile. All homes and businesses, in the area surrounding the Site, are supplied by two public water companies. Ground water is the source of water supplies for the entire population of both Nassau and Suffolk Counties. All public water supply wells in the Site area draw water from the deeper aquifer, the Magothy Aquifer. The nearest public water supply well fields are located approximately 1 mile east and 1 mile south of the Site.

The nearest body of surface water is an unnamed intermittent tributary of Massapequa Creek which is approximately 6000 feet west of the Site. There is no designated New York State Significant Habitat, agricultural land, nor historic or landmark site directly or potentially affected. There are no endangered species or critical habitats within close proximity of the Site. The Site is located more than 2 miles from a 5-acre coastal wetland and more than 1 mile from a 5-acre fresh-water wetland.

The Site is situated in the south-central glacial outwash plain of Long Island, which constitutes the Upper Glacial Aquifer, estimated to be 90 feet in thickness under the Site. The naturally occurring surface soil is a sandy loam which promotes rapid infiltration to the ground water. On the Site proper and throughout much of the region, soils have been classified as urban. This is primarily due to the development and pavement which promote greater run-off of precipitation. The Upper Glacial Aquifer overlies the Magothy Aquifer and the two may act as distinct aquifers, or as one, depending upon the degree of hydraulic connection between the two. In the Site area, it is believed that the two are not hydraulically connected.

SITE HISTORY AND ENFORCEMENT ACTIVITIES

The Preferred Plating Corporation (PPC) conducted operations beginning in September 1951 through June 1976. The primary activities at the Site were to chemically treat metal parts to increase their corrosion resistance and provide a cohesive base for painting. The plating processes included degreasing, cleaning, and surface finishing of the metal parts. These processes involved the use of various chemicals which resulted in the generation, storage, and disposal of hazardous waste. Untreated waste water was discharged to four concrete leaching pits directly behind the original building.

Ground water contaminated with heavy metals was detected in the Site area by the Suffolk County Department of Health Services (SCDHS) as early as June 1953. SCDHS indicated that the leaching pits on the Site were severely cracked and leaking. Samples taken from the pits showed the major contaminants to be heavy metals. From 1953 to 1976, SCDHS instituted numerous legal actions against PPC in an effort to stop illegal dumping of wastes and to install or upgrade the on-site treatment facility. PPC prepared an engineering report in May 1974 in order to apply for a State Pollutant Discharge Elimination System (SPDES) permit which was issued in June 1975. PPC chemically treated the waste water in the pits and, allegedly, then had the treated waste water removed. Whether the treated ground water was ever removed has not been confirmed by EPA. The facility was never in full compliance with the terms and conditions outlined in the permit.

In 1976, PPC declared bankruptcy. Since then, several firms have occupied the Site, none conducting similar operations to PPC. In 1982, the original building was extended by 200 feet, thereby burying the concrete leaching pits. Nearly the entire Site is covered either by the one existing building or paved driveways and parking areas.

In September 1984, Woodward-Clyde Consultants, Inc. performed a Phase I-Preliminary Investigation of the Preferred Plating Site for NYSDEC for the purpose of computing a Hazard Ranking System (HRS) score needed to evaluate whether to place the Site on the National Priorities List (NPL). In the Phase I report, an HRS score of 33.76 was documented, thereby enabling the Site to be included on the NPL. On October 15, 1984, (49 FR 1984), the Site was proposed for the NPL and was added with a ranking of 500 on June 10, 1986, (51 FR 21054).

At EPA's direction, a remedial investigation (RI) was initiated in 1987. The RI consisted of a field sampling and analysis program followed by validation and evaluation of the data collected. The field work was initiated in June 1988 and completed in February 1989. The work was conducted by EPA's REM III contractor, Ebasco Services, Inc. The soil sampling program involved the determination of lateral and vertical extents of contamination by obtaining samples from six

on-site monitoring wells, two off-site monitoring well locations, six surface soil locations, and seven angle borings which extended underneath the on-site building overlying the former leaching pits. The groundwater sampling program involved the installation of nine on-site and two off-site monitoring wells. In addition, two storm water run-off samples and two sediment samples were collected from on-site storm sewers.

The potentially responsible parties (PRP's) were notified in writing on February 12, 1988 via a special notice letter and given the opportunity to conduct the RI/FS under EPA supervision. However, none elected to undertake these activities.

In July 1989, Ebasco's remedial investigation (RI) and feasibility study (FS) reports were released to the public along with the Proposed Remedial Action Plan (PRAP) developed by EPA. A 28-day public comment period was provided, ending on August 18, 1989.

COMMUNITY RELATIONS ACTIVITIES

A Community Relations Plan for the Preferred Plating Site was finalized in March 1988. This document lists contacts and interested parties throughout government and the local community. It also establishes communication pathways to ensure timely dissemination of pertinent information. Subsequently, a fact sheet outlining the RI sampling program was distributed in June 1988. The RI/FS and the Proposed Plan were released to the public in July 1989. All of these documents were made available in both the administrative record and two information repositories maintained at the Babylon Town Hall and the West Babylon Library. A public comment period was held from July 19, 1989 to August 18, 1989. In addition, a public meeting was held on August 3, 1989 to present the results of the RI/FS and the preferred alternative as presented in the Proposed Plan for the Site. All comments which were received by EPA prior to the end of the public comment period, including those expressed verbally at the public meeting, are addressed in the Responsiveness Summary which is attached, as Appendix V, to this Record of Decision.

SCOPE AND ROLE OF OPERABLE UNIT ONE WITHIN SITE STRATEGY

The objective of this operable unit is to address the overall groundwater contamination attributable to the Site. The selected remedy will treat ground water until the influent contaminant concentrations equal the upgradient concentrations. When this has been achieved, the saturated soils underlying the Site will have been essentially flushed of any contaminants, thereby resulting in no net contribution of contaminants from the Site to the aquifer below.

The results of the RI failed to detect evidence of soil contamination in any of the samples collected. However, since the downgradient groundwater contaminant concentrations were, on the average, an order of magnitude greater than the upgradient concentrations, a source of contamination is believed to exist in the saturated soils beneath the Site. Due to fluctuating water table levels, the zone of saturated soils beneath the building varies. Directly, the selected remedy will be cleaning the ground water. Indirectly, it will be flushing contaminants out of the saturated soils.

If the source of contamination in those saturated soils could be located and controlled, the restoration time frame for cleaning the ground water would be greatly reduced. Therefore, a second operable unit will be undertaken to more fully characterize and identify any contaminated soils, both saturated and unsaturated, located beneath the building and to investigate potential upgradient sources of contamination.

SUMMARY OF SITE CHARACTERISTICS

The purpose of the RI conducted at the Preferred Plating Site was to identify the nature and extent of contamination in environmental media on-site, including soil, sediment, ground water, and storm water run-off. To accomplish this, two rounds of ground water samples were collected from the nine on-site monitoring wells as well as the two off-site wells. In addition, various soil samples were collected, including samples from seven sub-surface angle borings drilled beneath the building. (See Figure 2 for on-site sample locations). All samples were subjected to complete Target Compound List analyses. The results of the investigation indicate the following:

- Ground water underlying the Site is contaminated with high levels of heavy metals. Low levels of chlorinated hydrocarbons and cyanide were also detected in a few samples. Upgradient ground water also showed high levels of heavy metals, though significantly lower than on-site levels.

- The soils sampled on-site, including those collected from beneath the building, failed to detect any sources of contamination.

Chemical analysis of the 24 groundwater samples collected from the Upper Glacial Aquifer detected concentrations of cadmium, chromium, lead, and nickel above the allowable maximum contaminant levels (MCLs) in numerous samples. The highest value for a contaminant was that of chromium at 5,850 ppb. On-site wells, installed downgradient of the former leaching pits, showed the highest levels of contamination. Upgradient wells also showed levels of contamination above allowable MCLs, however, at an order of magnitude lower than

the downgradient wells. Low levels of chlorinated organics, predominantly 1,1,1-trichloroethane; trichloroethylene; 1,2-dichloroethane; 1,1-dichloroethane; and tetrachloroethylene were detected in a few samples. In addition, three samples indicated the presence of cyanide above allowable MCLs. Concentrations for all inorganic and organic contaminants and their frequency of detection are shown in Table 1.

The sub-surface soil analyses collected from both the seven angle borings and the eleven monitoring well borings showed normal background levels for contaminants. Since the downgradient wells have much higher levels of contaminants than the upgradient wells, it is assumed that a source of contamination exists in the saturated soils located beneath the building that was not identified during this investigation. This will attempt to be identified as part of the second operable unit.

Surface soil samples collected from six separate locations indicated contamination to be generally below normal background levels.

Storm water run-off showed no significant contamination. Storm sewer sediments showed the presence of organics currently being used on-site.

DOCUMENTATION OF SIGNIFICANT CHANGES

The Proposed Plan for the Preferred Plating Site was released to the public in July 1989. The Proposed Plan identified Alternative 3 as the preferred remedy and Alternative 2 as the contingency remedy. EPA reviewed all comments submitted during the public comment period. Upon review of these comments, it was determined that no significant changes to the selected remedy, as it was originally identified in the Proposed Plan, were necessary.

SUMMARY OF SITE RISKS

The National Contingency Plan requires that a Risk Assessment (RA) be conducted to document and justify whether an imminent and substantial risk to public health or the environment may exist at a Superfund site. The risk assessment for the Preferred Plating Site is contained in the RI report dated July 1989.

The baseline RA defines the actual and potential risks to human health and the environment from the presence of the hazardous substances on and around the Site if no action is taken. The baseline RA determined that the contaminants in the ground water and the Site soils have no major negative impact on the environment. Since the Site is presently covered by a building and pavement, the only potential pathway with a risk to the public was determined to be ingestion of contaminated ground water. Although the groundwater sampling did indicate high levels of heavy metal contamination, there

is no present direct human exposure to contaminants since the surrounding population is supplied by public water. However, the Upper Glacial Aquifer is classified as IIb, or potential drinking water, and therefore, a potential risk to human health would exist in the event that this aquifer is developed for use. Also, the potential for off-site downward migration of contaminants exists due to a possible connection off-site between the Magothy and Upper Glacial Aquifers.

A comparison of the concentrations of chemicals in the ground water with applicable or relevant and approriate requirements (ARARs) indicated that numerous inorganic and organic compounds are in exceedance of those ARARs. Based on this comparison, the inorganics cadmium, chromium, lead, nickel and cyanide were evaluated and modeled in the RA. Although not all of the organic contaminants of concern exceeded ARARs, they were carried through the RA because they are potential carcinogens.

Based on the review of available data, the Site geology and the results of the public health evaluations, a significant non-carcinogenic risk from consumption of the Upper Glacial Aquifer ground water exists at the Preferred Plating Corporation Site. Given the potential risk posed by the contribution of metal contamination by the Site, the following Remedial Objective was developed for the first operable unit (OU I):

- Reduce the groundwater contaminant concentrations in the Upper Glacial Aquifer underlying the Site to upgradient concentrations.

The second operable unit (OU II) will attempt to identify and control the upgradient source area. The selected remedy for OU I is only a portion of a total remedial action, including OU II, and will attain all clean-up levels when fully completed.

The quantitative clean-up levels for remediating the ground water are presented in Table 2. In removing contaminated ground water, any contributing sources of contamination in the saturated soils beneath the building will be indirectly removed.

Actual or threatened releases of hazardous substances from this Site, if not addressed by implementing the response action selected in this ROD, may present an imminent and substantial endangerment to public health, welfare, or the environment.

DESCRIPTION OF ALTERNATIVES

This section describes the remedial alternatives which were developed, using suitable technologies, to meet the objectives of the National Oil and Hazardous Substances Pollution Contingency Plan (NCP), 40 CFR Part 300, and the Comprehensive Environmental Response,

Compensation, and Liality Act (CERCLA), 42 USC § 9601, et seq. These alternatives were developed by screening a wide range of technologies for their applicability to site-specific conditions and evaluating them for effectiveness, implementability, and cost.

A comprehensive list of remedial technologies was compiled for remediation of the ground water. These technologies were screened based on the characteristics of the Site. Those technologies which were retained after the preliminary screening process were assembled to form seven groundwater alternatives. The alternatives developed for the Preferred Plating Site are detailed below. The restoration time frames provided below assume that a source of contamination exists in the saturated soils located beneath the building and will continue to exist and contribute to ground water contamination. The findings of the second operable unit may affect the following time frames.

Alternative 1 - No Action

Construction Cost:	$ 12,700
Annual O&M Costs:	$ 11,600
Present Worth Cost:	$ 175,300
Construction Time:	1 month
Restoration Time:	19 years

The no-action alternative is required by the NCP to be considered through the detailed analysis. It provides a baseline for comparison of other alternatives. Under this alternative, a public awareness program will be developed describing the risks associated with the Site. In addition, existing monitoring wells will be used to conduct long-term monitoring of the contaminant concentrations in the Upper Glacial Aquifer underlying the Site until such time that the downgradient contaminant concentration levels reach upgradient levels due to natural attenuation.

Alternative 2 - Pumping/Precipitation of Metals/Activated Carbon/ Reinjection

Construction Cost:	$ 2,286,900
Annual O&M Costs:	$ 1,071,300
Present Worth Cost:	$ 10,899,600
Construction Time:	18 months
Restoration Time:	12 years

This alternative consists of one on-site collection well for the extraction of contaminated ground water to be sent for treatment. Groundwater modelling predicts that the extraction system will capture essentially all the ground water in the Upper Glacial Aquifer over a capture radius of 150 feet by providing a continual flow of 300 gallons per minute to the treatment plant. The influent ground water will enter the treatment plant where it will first go through a

2-stage precipitation and clarification/filtration unit for the removal of all heavy metals, followed by a carbon adsorption unit for removal of volatile organic compounds. The metals treatment will generate 4, 55-gallon drums of wet cake per day to be ultimately disposed of in a Resource, Conservation and Recovery Act (RCRA) subtitle C facility. The treatment scheme is a proven technology capable of removing the contaminants of concern from the ground water. The ground water pumped from the Site shall be treated to satisfy all federal and state standards for class IIb waters, potential drinking waters, prior to reinjection. The treated ground water will be discharged to a reinjection well installed east of the Site and upgradient of both the extraction well and former leaching pits. In order to evaluate the effectiveness of this remedial action, periodic sampling for metal and volatile organic concentrations in the ground water prior to reinjection will be required.

Alternative 3 - Pumping/Precipitation of Divalent Metals/Activated Carbon/Ion Exchange/Reinjection

Construction Cost:	$ 1,923,900
Annual O&M Costs:	$ 920,900
Present Worth Cost:	$ 9,327,400
Construction Time:	18 months
Restoration Time:	12 years

Under this alternative, the same extraction system is used to withdraw the contaminated ground water as that of Alternative 2. The treatment scheme differs in that only the divalent metals will be treated by a precipitation unit, whereas the chromate ion will be treated with an ion exchange unit. The ion exchange process is a proven technology, however, a treatability study must be performed to demonstrate if the concentrations of chromium can be reduced to the necessary levels. The equipment used in the treatment scheme occupies less space and, therefore, the treatment plant will be smaller than that needed for Alternative 2. The reinjection scheme will be identical to that of Alternative 2.

Alternative 4 - Pumping/Precipitation of Metals/Activated Carbon/ Discharge to Recharge Basin

Construction Costs:	$ 2,547,700
Annual O&M Costs:	$ 1,071,300
Present Worth Cost:	$ 11,160,500
Construction Time:	18 months
Restoration Time:	12 years

The collection and treatment systems in this alternative are both identical to Alternative 2. The discharge system differs in that the treated ground water will be pumped approximately 2,000 feet south of the Site, through an underground pipeline, to a recharge basin.

Alternative 5 - Pumping/Precipitation of Divalent Metals/Activated Carbon/Ion Exchange/Discharge to Recharge Basin

Construction Costs:	$ 2,184,800
Annual O&M Costs:	$ 920,900
Present Worth Cost:	$ 9,588,300
Construction Time:	18 months
Restoration Time:	12 years

The collection and treatment systems in this alternative are both identical to Alternative 3. The discharge system is identical to Alternative 4.

Alternative 6 - Pumping/Precipitation of Metals/Activated Carbon/ Discharge to Surface Water

Construction Costs:	$ 4,333,300
Annual O&M Costs:	$ 1,071,300
Present Worth Cost:	$ 12,946,100
Construction Time:	18 months
Restoration Time:	12 years

This alternative is essentially identical to Alternative 4 except that the treated ground water will be discharged at the headwater of the Amityville Creek, through a 9,000 foot underground pipeline. The concentration levels required for discharge to surface water are lower for certain chemicals than the levels for discharge to ground water. The more stringent surface water discharge limitations are technically impossible to achieve using available technologies.

Alternative 7 - Pumping/Precipitation of Divalent Metals/Activated Carbon/Ion Exchange/Discharge to Surface Water

Construction Costs:	$ 3,970,400
Annual O&M Costs:	$ 920,900
Present Worth Cost:	$ 11,373,900
Construction Time:	18 months
Restoration Time:	12 years

The collection and treatment systems of this alternative are both identical to Alternative 3 and the discharge system is identical to Alternative 6.

SUMMARY OF THE COMPARATIVE ANALYSIS OF ALTERNATIVES

All alternatives were evaluated in detail utilizing nine criteria. These criteria were developed to address the requirements of Section 121 of the Superfund Amendments and Reauthorization Act (SARA) of 1986. The nine criteria are as follows:

Threshold Criteria	▲ Overall protection of human health and the environment; and ▲ Compliance with applicable or relevant and appropriate requirements.
Primary Balancing Criteria	▲ Long-term effectiveness and permanence; ▲ Reduction in toxicity, mobility, or volume through treatment; ▲ Short-term effectiveness; ▲ Implementability; and ▲ Cost.
Modifying Criteria	▲ State/support agency acceptance; and ▲ Community acceptance.

The discussion which follows provides a summary of the relative performance of each alternative with respect to the nine criteria.

Overall Protection of Human Health and the Environment

This criterion addresses whether or not a remedy provides adequate protection and describes how risks are eliminated, reduced or controlled through treatment, engineering controls, or institutional controls.

Protection of human health and the environment is the central mandate of CERCLA. Protection is achieved primarily by taking appropriate action to ensure that there will be no unacceptable risks to human health or the environment through any exposure pathways. No direct risk to human health or the environment presently exists because the ground water in the immediate vicinity of the Site is not currently used as a potable water source.

Alternatives 2 - 7 will require 12 years, while Alternative 1 will require 19 years, to achieve downgradient contaminant concentration levels equal to upgradient levels. When this has been achieved, the saturated soils underlying the Site will have essentially been flushed of any contaminants, thereby resulting in no net contribution of contaminants to the aquifer below. All treatment alternatives, aside from the no-action alternative, will result in permanent protection of the environment and human health through the reduction in toxicity, mobility, and volume of the contaminants.

Compliance with ARARs

This criterion addresses whether or not a remedy will meet all applicable or relevant and appropriate requirements and/or provide grounds for invoking a waiver. ARARs can be chemical-specific, location-specific, or action-specific.

Alternatives 2- 5 achieve ARARs to a similar degree and more so than Alternatives 6 and 7. None of the alternatives will achieve chemical-specific ARARs for ground water rated IIb, potential drinking water, unless off-site upgradient sources are removed. Although the selected remedial action, the first operable unit, will not meet chemical-specific ARARs, it is only part of a total remedial action that will attain such clean-up levels when fully completed. A second operable unit will be conducted in an attempt to identify upgradient sources of contamination. In the event the second operable unit fails to identify or control upgradient sources, a waiver for technical impracticabilty will be sought.

Alternatives 2 - 7 will meet action-specific ARARs. Under alternatives 2 - 5, treated ground water will meet pertinent federal and state ARARs for either reinjection or discharge to the recharge basin. Under Alternatives 6 and 7, ground water will be treated as close as technically possible to the Class C surface water body ambient standards for parameters of concern since it is technically impracticable to meet all of these standards. A technical impracticability waiver would also be needed for discharge to surface waters if Alternatives 6 or 7 were selected.

Reduction of Toxicity, Mobility, or Volume

This evaluation criterion relates to the anticipated performance of a remedial technology, with respect to these parameters, that a remedy may employ.

Alternatives 2 - 7 will control the mobility of the contaminants, contributed by the Site, by extraction within the Upper Glacial Aquifer over a 150-foot radius capture zone. These alternatives will also significantly reduce or eliminate the toxicity and volume of the contaminated ground water by treating to remove metals and volatile organics. Alternative 1 will gradually reduce the toxicity and volume of the contaminated ground water by natural attenuation but will do nothing to prevent the migration of contaminants.

Short-term Effectiveness

This criterion involves the period of time each alternative needs to achieve protection and any adverse impacts on human health and the environment that may be posed during construction and implementation of the alternative.

Alternative 1 will take approximately 1 month to implement and presents no short-term risks to on-site workers or the community. Alternatives 2 - 7 present minimal short-term risks to workers through direct contact pathways and normal construction hazards during remedial action. Each of these alternatives will take approximately 12 years to achieve remediation goals, with their respective construction phases being completed in two years or less.

Long-term Effectiveness and Permanence

This criterion refers to the ability of a remedy to maintain reliable protection of human health and the environment over time, once clean-up levels have been met. It also addresses the magnitude and effectiveness of the measures that may be required to manage the risk posed by treatment residuals and/or untreated wastes.

Alternatives 2 - 7 present no long-term threat to public health because these alternatives are designed to reduce contaminant concentrations in the ground water to levels that are health protective prior to discharge. Alternative 1 may present a long-term risk because it relies on natural attenuation of ground water to reduce contaminant concentrations to action levels.

Implementability

This criterion involves the technical and administrative feasibility of a remedy, including the availability of materials and services needed to implement the chosen solution.

Alternative 1 will require a public awareness program and groundwater monitoring which can be easily implemented. Alternatives 2 - 7 may require off-site property procurement for construction of a treatment plant if the plant cannot be placed on-site. Equipment used in the treatment schemes are readily available. The differences in implementability between Alternatives 2 - 7 depend upon the degree of access needed for the discharge system involved in each and the need for treatability studies. Alternatives 2 and 3 will require the installation of one reinjection well which will require property rights for the well placement and a 500 foot underground pipeline. Pipelines, totaling 2,000 feet, needed for discharge to the recharge basin under Alternatives 4 and 5 will be installed beneath public roads. Pipelines, totaling 9,000 feet, needed for discharge to surface water under Alternatives 6 and 7 will be installed beneath both public and private properties.

Alternatives 3, 5, and 7 require a treatability study to ensure the effectiveness of the ion exchange process involved in each and, therefore, their respective implementation time frames are 6 months longer than Alternatives 2, 4, and 6.

Cost

This criterion includes both capital and operation and maintenance (O&M) costs. Cost comparisons are made on the basis of present worth values. Present worth values are equivalent to the amount of money which must be invested to complete a certain alternative at the start of construction to provide for both construction costs and O&M costs over time. Present cost estimates for all of the alternatives are as follows:

Alternative 1:	$ 175,300
Alternative 2:	10,899,600
Alternative 3:	9,327,400
Alternative 4:	11,160,500
Alternative 5:	9,588,300
Alternative 6:	12,946,100
Alternative 7:	11,373,900

Alternative 1, no-action, will be the least costly to implement followed by Alternatives 3, 5, 2, 4, 7, and 6.

State Acceptance

The State of New York, through the New York State Department of Environmental Conservation (NYSDEC), has concurred with EPA's selected remedy and contingency remedy. The NYSDEC letter of concurrence is attached as Appendix IV.

Community Acceptance

No objections from the community were raised regarding the selected remedy or the contingency remedy. Community comments can be reviewed in the August 3, 1989 public meeting transcript, which has been included in the Administrative Record. A responsiveness summary which addresses all comments received during the public comment period is attached as Appendix V.

THE SELECTED REMEDY

Based upon all available data and analyses conducted to date, EPA has selected **Alternative 3: Pumping/Precipitation of Divalent Metals/ Activated Carbon/Ion Exchange/Reinjection** as the most appropriate solution for meeting the goals of this remedial investigation. This alternative does involve a treatability study to ensure that the ion exchange unit can meet all necessary treatment level requirements for the chromate ion. In the event the treatability study indicates that the ion exchange process is ineffective in reducing the chromate ion to the necessary levels, Alternative 2: Pumping/Precipitation of Metals/Activated Carbon/Reinjection will be selected as the contingency remedy.

For both the selected remedy and the contingency remedy, ground water within a capture zone radius of approximately 150 feet will be extracted and treated to remove heavy metals and chlorinated hydrocarbons. The treated ground water will be reinjected to the underlying aquifer, the Upper Glacial Aquifer. The treatment residuals will be disposed of in a RCRA subtitle C facility. The major components of the selected remedy and the contingency remedy are depicted in Figures 3 and 4, respectively.

The purpose of this response action is to control risks posed by the ingestion of contaminated ground water by addressing the following issues:

- The divalent metal concentrations (cadmium, lead, and nickel) will be reduced through a metals precipitation process involving a clarification/filtration unit.

- The chlorinated organic concentrations (1,1,1-trichloroethane, trichloroethylene, 1,2-dichloroethane, 1,1-dichloroethane, and tetrachloroethylene) will be reduced using carbon adsorption.

- The chromate ion will be reduced using an ion exchange process as stated in the selected remedy, or a precipitation process as stated in the contingency remedy.

During the remedial design phase of the project, additional sampling will be conducted to check for any changes in contaminant levels. If this sampling indicates concentrations of cyanide above the allowable state and federal standards, a treatment process for cyanide removal will be added to the selected alternative. This treatment process is known as alkaline chlorination. The process is depicted in Figure 5.

All contaminant concentrations will be reduced until they are equal to or less than their respective federal or state standards prior to reinjection. The treated effluent will be tested to ensure that the treatment system is operating efficiently. Any waste residuals generated by the treatment processes will be disposed of in accordance with applicable disposal standards. Although the remedial action selected, the first operable unit, will not meet chemical-specific ARARs, it is only part of a total remedial action that will attain such cleanup levels when fully completed.

STATUTORY DETERMINATIONS

EPA believes that both the selected remedy as well as the contingency remedy will satisfy the statutory requirements of providing protection of human health and the environment, being cost-effective, utilizing permanent solutions and alternative treatment technologies or resource recovery technologies to the maximum extent practicable, and satisfying the preference for treatment as a principal element.

Protection of Human Health and the Environment

The selected remedy and the contingency remedy eliminate all outstanding threats posed by the site. Both remove any contribution of contaminants in the saturated zone to the underlying aquifer and reduce contaminant concentration levels in that aquifer to upgradient levels.

Compliance with ARARs

The following ARARs and considerations apply to both the selected remedy and the contingency remedy:

Action-specific ARARs:

- SDWA Maximum Contaminant Levels (40 CFR 141.11 - 141.16), 6 NYCRR Part 703, and 10 NYCRR Part 5 provide standards and goals for toxic compounds for public drinking water systems. The reinjection process for the treated ground water will meet underground injection well regulations by its status as a Superfund remedial action under 40 CFR 147. The extracted ground water will be treated to meet all standards prior to reinjection.

- Spent carbon from the groundwater treatment system for removal of organics will be disposed of off-site, as well as any treatment residuals, consistent with applicable RCRA land disposal restrictions under 40 CFR 268.

Chemical-specific ARARs:

- Since the ground water at the site is classified as IIb, drinking water standards are relevant and appropriate. Again, these include SDWA MCLs, 6 NYCRR Groundwater Quality Regulations and/or limitations of discharges to Class GA waters, and 10 NYCRR Part 5 standards.

Location-specific ARARs:

none

Other Criteria, Advisories, or Guidance To Be Considered:

- NY TOGS 2.1.2 and 1.1.1 provide standards for reinjection of treated ground water and are to be considered. SDWA MCL Goals (40 CFR 141.50 - 141.51) provide goals for toxic compounds for public drinking systems and are also to be considered.

Neither the selected remedy nor the contingency remedy, by itself, will meet all chemical-specific ARARs and be capable of restoring area ground water to groundwater quality standards until upgradient source areas are removed. The second operable unit will attempt to identify and control the upgradient sources. Although the selected remedial action, the first operable unit, will not meet chemical-specific ARARs, it is only part of a total remedial action that will attain such cleanup levels when fully completed. In the event the second operable unit fails to identify those sources, a waiver of ARARs for technical impracticability will be sought. In this case, treatment of the ground water will continue until the concentration of contaminants in ground water downgradient of the Site is less than or equal to concentrations in ground water upgradient of the Site. At that time, groundwater recovery and treatment will be discontinued even though area ground water may not meet applicable groundwater quality standards.

Cost Effectiveness

The preferred alternative, Alternative 3, provides overall effectiveness proportionate to its cost. It is $1.5 M less costly than the contingency remedy, Alternative 2, and offers comparable performance, requires construction of a smaller treatment plant, and has a lower possibility of initiating secondary pollution problems.

Utilization of Permanent Solutions and Alternative Treatment Technologies or Resource Recovery Technologies to the Maximum Extent Possible

EPA has determined that the selected remedy as well as the contingency remedy represents the maximum extent to which permanent solutions and treatment technologies can be utilized in a cost-effective manner for the Preferred Plating Site. The selected remedy represents the best balance of the nine evaluation criteria used to judge all alternatives.

The groundwater treatment used in both the selected and contingency remedies will reduce the contaminants of concern to health protective levels prior to reinjection. After treatment is complete, the Site will no longer be contributing contaminants to the underlying aquifer.

Preference for Treatment as a Principal Element

The statutory preference for treatment is satisfied by both the selected remedy and contingency remedy which employ on-site treatment of the ground water through different precipitation technologies and carbon adsorption. These treatment methods effectively reduce the toxicity, mobility, and volume of the contaminants.

APPENDIX I

FIGURES

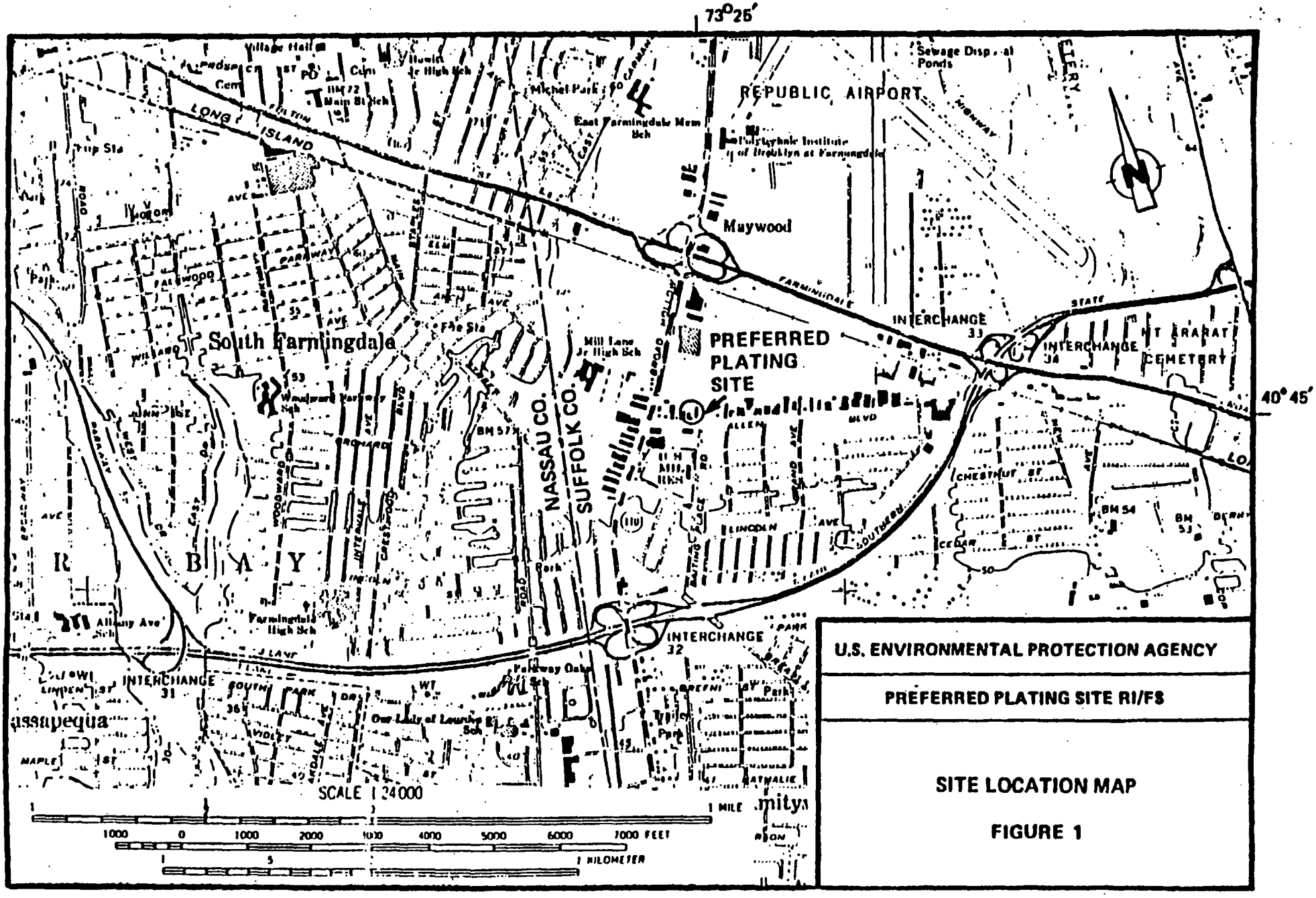

U.S. ENVIRONMENTAL PROTECTION AGENCY

PREFERRED PLATING SITE RI/FS

SITE LOCATION MAP

FIGURE 1

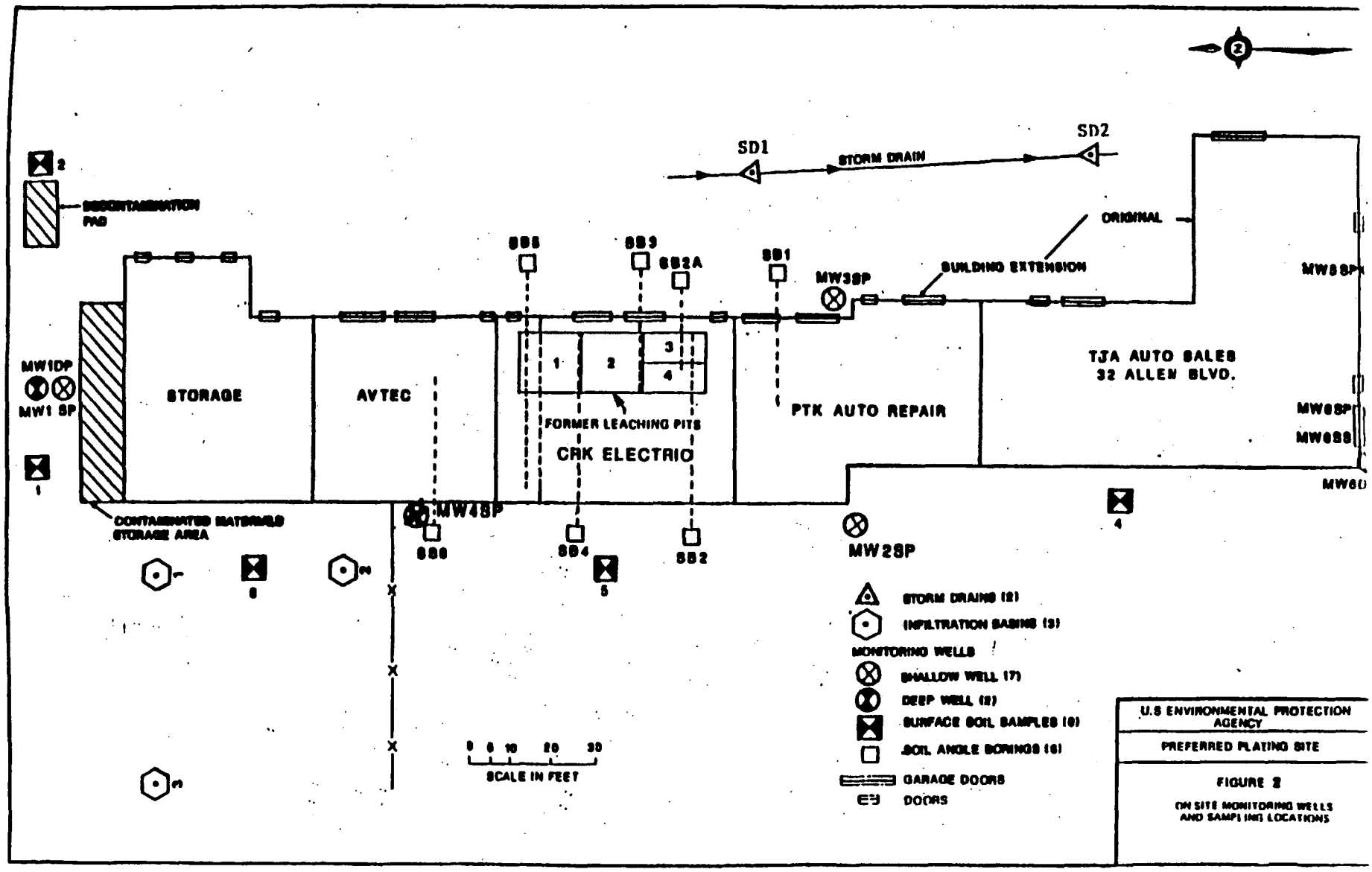
SD1
STORM DRAIN
SD2
ORIGINAL
BUILDING EXTENSION
MW3SP
SB1
SB2A
SB3
SB5
MW8SP
MW8SS
MW6D
TJA AUTO SALES
32 ALLEN BLVD.
PTK AUTO REPAIR
FORMER LEACHING PITS
CRK ELECTRIC
STORAGE
AVTEC
MW1DP
MW1 SP
CONTAMINATED MATERIALS
STORAGE AREA
MW4SP
SB6
SB4
SB2
MW2SP
STORM DRAINS (2)
INFILTRATION BASINS (3)
MONITORING WELLS
SHALLOW WELL (7)
DEEP WELL (2)
SURFACE SOIL SAMPLES (6)
SOIL AUGER BORINGS (6)
GARAGE DOORS
DOORS
SCALE IN FEET
U.S ENVIRONMENTAL PROTECTION AGENCY
PREFERRED PLATING SITE
FIGURE 2
ON SITE MONITORING WELLS AND SAMPLING LOCATIONS

FIGURE 3

PROCESS FLOW SCHEME FOR ALTERNATIVE 3

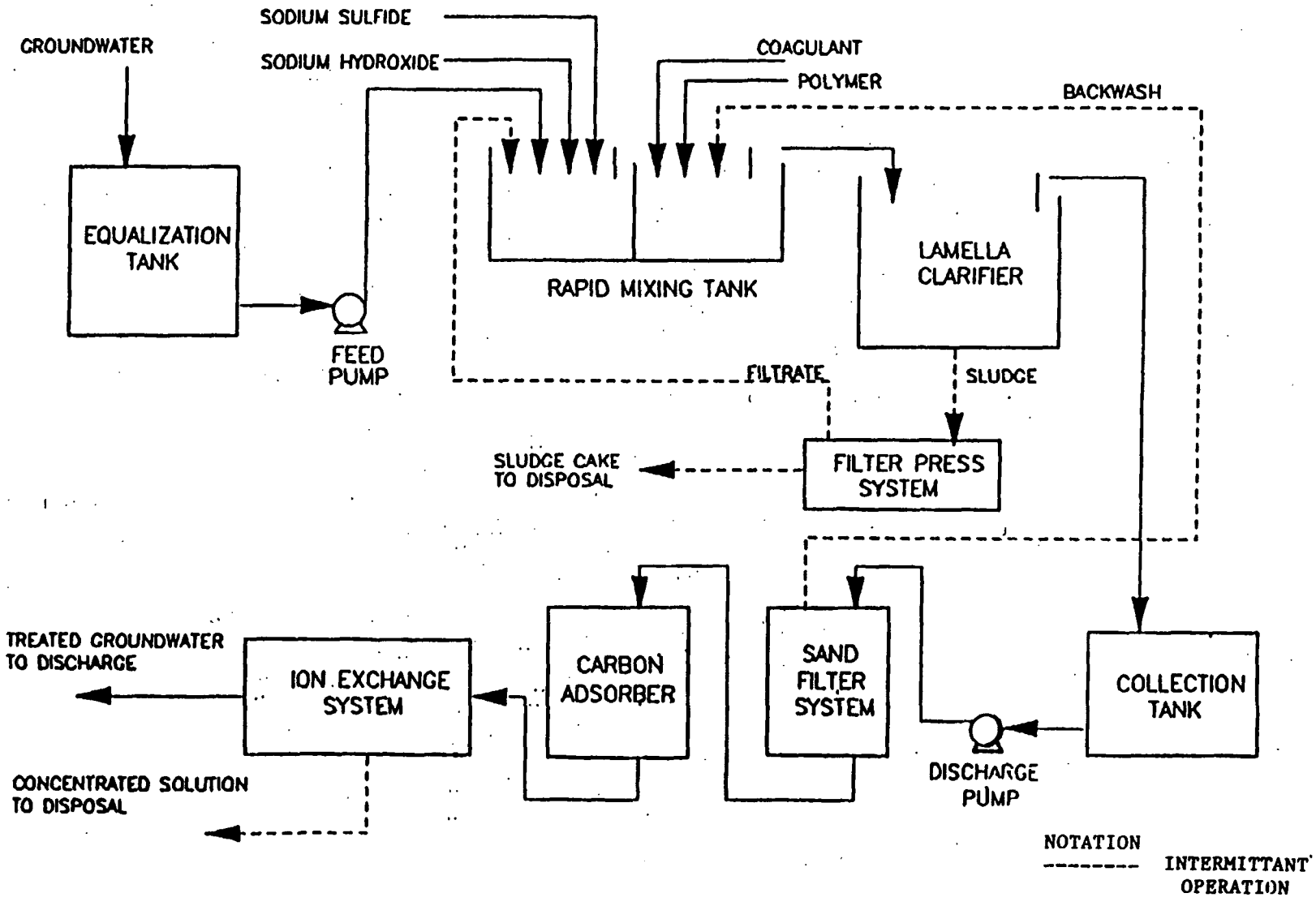

[redacted]

FIGURE 4
PROCESS FLOW SCHEME FOR ALTERNATIVE 2

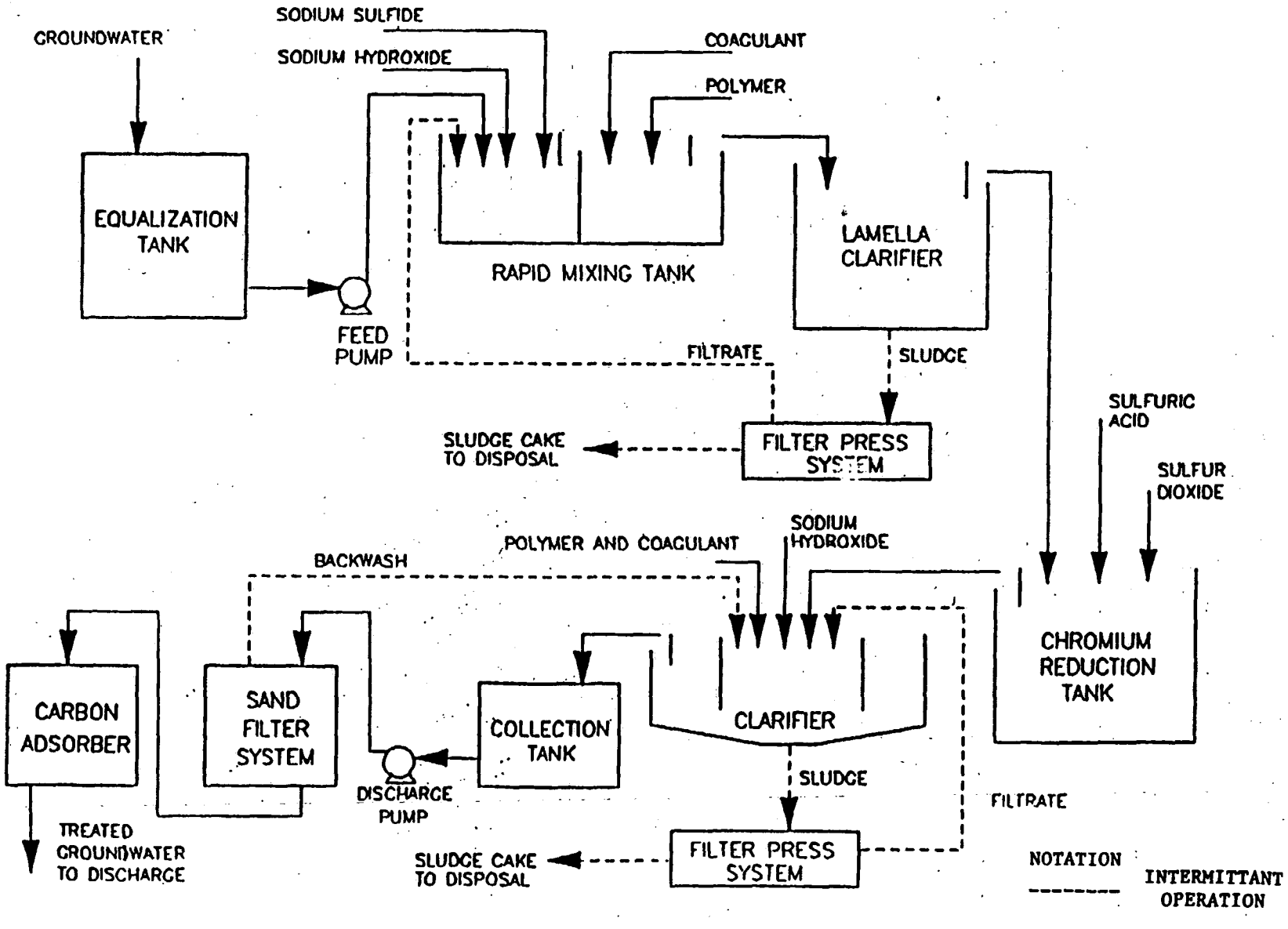

FIGURE 5

PROCESS FLOW SCHEME FOR CYANIDE REMOVAL BY AKLALINE CHLORINATION

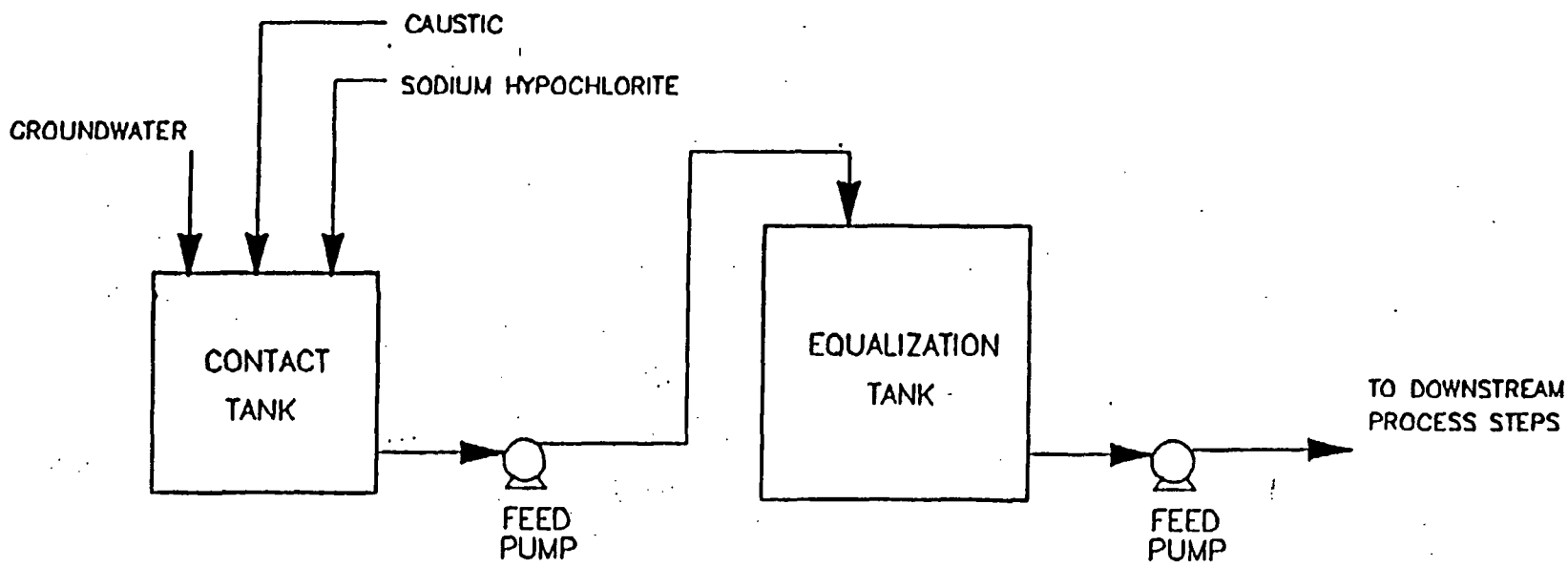

COMMENT:

THE CONTACT TANK IS USED FOR THE FIRST-STAGE CHLORINATION, AND THE EQUALIZATION TANK IS USED AS THE SECOND-STAGE CHLORINATION.

APPENDIX II

TABLES

TABLE 1

PRIMARY CONTAMINANTS IN GROUNDWATER
PREFERRED PLATING CORPORATION SITE

Component	Range (ug/l)	Median (ug/l)	Frequency of Detection
Cadmium	8.4-399	79	18/24
Chromium	56.3-5,850	479	23/24
Lead	4.6-437	143.5	22/24
Mercury	0.27-0.40	0.36	7/24
Nickel	39.9-358	212	15/24
Silver	1.1-18.5	12.8	10/24
Zinc	30.3-1,330	573	22/24
Cyanide	10.5-830	82.7	7/24
1,1,1-trichloro-ethane	2-13	3.3	9/24
Trichloroethylene	1-8	2.8	11/24
1,2-dichloroethane	2-5	2.0	6/24
Benzene	1-12	2.3	4/24
1,1-dichloroethane	1-3	1.2	4/24
Tetrachloroethylene	1-17	1.9	6/24
Toluene	3-11	2.4	3/24

TABLE 2

CLEAN-UP LEVELS

CONTAMINANT	MAXIMUM CONCENTRATION	FEDERAL ARARS: RCRA MAXIMUM CONCENTRATION LIMIT	FEDERAL ARARS: SDWA MCL'S	FEDERAL ARARS: CLEAN WATER ACT WQC	NY AMBIENT WATER QUALITY STANDARDS/GUIDANCE VALUES: DRINKING WATER	NY AMBIENT WATER QUALITY STANDARDS/GUIDANCE VALUES: G.W. FOR DRINKING WATER	NY AMBIENT WATER QUALITY STANDARDS/GUIDANCE VALUES: CLASS "C SURFACE WA
Cadmium	399	10	10	10	10	10	1.1
Chromium	5850	50	50	50	50	50	11
Iron	81,000	NC	NC	-	300	300	300
Lead	398	50	50	50	50	25	3.2
Mercury	4	2	2	10	2	-	-
Nickel	358	NC	NC	15.4	NC	NC	95.6
Silver	18.5	50	50	50	50	50	0.1
Zinc	1330	-	-	5,000	-	5,000	30
Cyanide	830	-	-	200	-	200	5.2 (as free cyanide)
Toluene	11	-	-	143	5	50	-
Benzene	12	-	5	40	5	ND	6
1,2-Dichloro-ethane	5	-	5	243	5	0.8	-
1,1-Dichloro-ethane	3	-	-	-	5	50	-
Tetrachloro-ethylne	17	-	-	0.8	5	0.7	1
Trichloro-ethylne	8	-	-	2.7	5	5	11
1,1,1-Trich-loroethane	13	-	-	18.4	5	50	-

APPENDIX IV

NYSDEC LETTER OF CONCURRENCE

New York State Department of Environmental Conservation
50 Wolf Road, Albany, New York 12233 - 7010

Thomas C. Jorling
Commissioner

Mr. Stephen D. Luftig, P.E.
Director
Emergency & Remedial Response Division
U.S. Environmental Protection Agency
Region II
26 Federal Plaza
New York, NY 10278

SEP 22 1989

Dear Mr. Luftig:

Re: Record of Decision (ROD)
Preferred Plating Corp. #152030

The New York State Department of Environmental Conservation (NYSDEC) has reviewed the draft Record of Decision and its modifications (September 5, 1989) for the referenced site. I am pleased to advise you that the NYSDEC concurs with the selected remedy.

Since the short schedule will not allow a review of the final ROD before the September 29, 1989 deadline, my acceptance of the remedy is based on our reading of the draft copy. In an effort to avoid a misunderstanding between our offices, the remedy that will appear in the final ROD should be as follows:

DESCRIPTION OF SELECTED REMEDY

This operable unit represents the first of two planned for the site. It addresses the treatment of groundwater contaminated primarily with heavy metals and volatile organics. The second operable unit will involve the continued study and possible remediation of soils located beneath the building on the site if the study so indicates. These soils could not be adequately characterized during the first operable unit. The second operable unit will also investigate potential sources of upgradient contamination.

The major components of the selected remedy include:

- Extraction and treatment, via metal precipitation, ion exchange, and activated carbon, of groundwater in the Upper Glacial Aquifer to restore the groundwater quality to cleanup levels identified in the decision summary under the section entitled Compliance with ARARs; and

- Disposal of treatment residuals at a RCRA subtitle C facility.

Treatability studies will be undertaken to confirm the effectiveness of the selected remedy. If these studies indicate that the ion exchange process used in the selected remedy is ineffective, a contingency remedy, which utilizes a separate precipitation unit for the removal of the chromate ion, will be implemented.

STATUTORY DETERMINATIONS

Both the selected remedy and the contingency remedy are protective of human health and the environment, are cost-effective, and comply with Federal and State requirements that are legally applicable or relevant and appropriate to the remedial action. Both the selected remedy and the contingency remedy utilize permanent solutions and alternative treatment technologies to the maximum extent practicable and satisfy the statutory preference for remedies that employ treatment that reduce toxicity, mobility, or volume as a principal element.

Existing groundwater quality data suggests that another source of groundwater contamination may exist upgradient of the Preferred Plating Site. If an upgradient source exists, this proposed remedy may not, by itself, be capable of restoring the area groundwater to applicable water quality standards. A second operable unit at this site will attempt to identify and control the apparent upgradient source. In the event the second operable unit fails to identify and control the upgradient source, a waiver for technical impracticability will be sought. In this event, treatment of the groundwater will continue until the concentration of contaminants in groundwater downgradient of the Preferred Plating Site is less than or equal to those contaminants found in groundwater upgradient of the site. At that time, groundwater recovery and treatment due to the Preferred Plating Site will be discontinued even though area groundwater may not meet applicable groundwater quality standards.

The need for conducting a five-year review will be evaluated upon completion of the second operable unit.

Additionally, a correction to the section Compliance with ARARs was agreed on between our staffs. The corrected version is to read:

COMPLIANCE WITH ARARs

At the completion of response actions, both the selected remedy and the contingency remedy will have complied with the following ARARs and considerations:

Action-specific ARARs:

- The reinjection process for the treated groundwater will meet underground injection well regulations by its status as a Superfund remedial action under 40 CFR 147. The extracted groundwater will be treated to meet all standards (SDWA Maximum Contaminant Levels [40 CFR Part 141], SDWA MCL goals [40 CFR Part 141]), 6 NYCRR Part 703 and 10 NYCRR Part 5, prior to reinjection.

- Spent carbon from the groundwater treatment system for removal of organics will be disposed of off-site, as well as any treatment residuals, consistent with applicable RCRA land disposal restrictions under 40 CFR 268.

Chemical-Specific ARARs:

- Since the groundwater at the site is classified as IIb, drinking water standards are applicable. Again, these include SDWA MCLs, SDWA MCL Goals, Water Quality Criteria under CWA, 6 NYCRR Groundwater Quality Regulations and/or limitations of discharges to Class GA waters, and 10 NYCRR Part 5 standards.

Sincerely,

Edward O. Sullivan

Edward O. Sullivan
Deputy Commissioner

cc: William McCabe, USEPA, Region II
Doug Garbarini, USEPA, Region II
Janet Cappelli, USEPA, Region II

ROD AMENDMENT FACT SHEET

SITE

Name:	Preferred Plating Corporation
Location/State:	Farmingdale, Suffolk County, New York
EPA Region:	II
HRS Score (date):	33.76 (Sept. 1984)
Site ID #:	NYD980768774

ROD

Date Signed:	September 30, 1997
Remedy:	No Further Action/Natural Attenuation
Operable Unit #:	01
Capital Cost:	$ -0-
Construction Completion:	N/A ***(ROD Amendment served as a construction completion for site).***
O & M/Year:	$ 5,000/yr (for monitoring)
Present Worth:	$ 19,588 (5 yrs O&M assumed)

LEAD

Agency/Type:	USEPA/Remedial
Primary Contact:	Janet Cappelli (212-637-4270)
Secondary Contact:	Doug Garbarini (212-637-4263)
Main PRP(s):	Joseph Gazza & George Paro (prop owners) (516) 694-1640

WASTE

Type:	Cadmium
Medium:	Groundwater
Origin:	Contamination resulted from improper storage of wastewater during plating operations.
Est. Quantity:	N/A *(very little cd remains above MCLs in groundwater - no plume detected)*