EPA/600/4-85/063
October 1985

A CRYOGENIC PRECONCENTRATION – DIRECT FID (PDFID) METHOD FOR MEASUREMENT OF NMOC IN AMBIENT AIR

by

Frank F. McElroy
Vinson L. Thompson
Methods Standardization Branch
Quality Assurance Division
Environmental Monitoring Systems Laboratory
Office of Research and Development

and

Harold G. Richter
Air Management Technology Branch
Monitoring and Data Analysis Division
Office of Air, Noise and Radiation
Office of Air Quality Planning and Standards

Environmental Monitoring Systems Laboratory
Office of Research and Development
U. S. Environmental Protection Agency
Research Triangle Park, North Carolina 27711

TECHNICAL REPORT DATA
(Please read Instructions on the reverse before completing)

1. REPORT NO. EPA/600/4-85/063	2.	3. RECIPIENT'S ACCESSION NO. PB86 120631/AS
4. TITLE AND SUBTITLE A Cryogenic Preconcentration - Direct FID (PDFID) Method for Measurement of NMOC in Ambient Air		5. REPORT DATE October 1985
		6. PERFORMING ORGANIZATION CODE
7. AUTHOR(S) Frank F. McElroy and Vinson L. Thompson (EMSL/RTP); Harold G. Richter (OAQPS/RTP)		8. PERFORMING ORGANIZATION REPORT NO.
9. PERFORMING ORGANIZATION NAME AND ADDRESS Quality Assurance Division/EMSL Office of Research and Development U. S. Environmental Protection Agency Research Triangle Park, NC 27711		10. PROGRAM ELEMENT NO.
		11. CONTRACT/GRANT NO.
12. SPONSORING AGENCY NAME AND ADDRESS Environmental Monitoring Systems Laboratory Office of Research and Development U.S. Environmental Protection Agency Research Triangle Park, NC 27711		13. TYPE OF REPORT AND PERIOD COVERED Final
		14. SPONSORING AGENCY CODE EPA/600/08

15. SUPPLEMENTARY NOTES

16. ABSTRACT

Accurate measurements of atmospheric concentrations of non-methane organic compounds (NMOC) are necessary in the application of photochemical models that are used by states in developing the control strategies needed to achieve compliance with ambient air quality standards for ozone. NMOC measurements obtained with available continuous NMOC analyzers have often been of inadequate quality. Speciated gas chromotographic measurements, though adequate, are excessively difficult and expensive where speciated data are not needed. A simplified cryogenic preconcentration, direct flame ionization detection (PDFID) method that is sensitive and provides accurate measurements of ambient NMOC concentrations has been developed and standardized sufficiently to be recommended for use by state and local air polluton control agencies in the development of their ozone control plans. Recent refinements to the method are discussed, an automatic remote sampling system is described, and the performance (precision and accuracy) of the method is characterized, based on results from utilization of the method for NMOC analysis of 1375 air samples collected from 22 sites during the summer of 1984. A complete description of the method is also provided in an appendix.

17. KEY WORDS AND DOCUMENT ANALYSIS

a. DESCRIPTORS	b. IDENTIFIERS/OPEN ENDED TERMS	c. COSATI Field/Group
Air pollution measurement analysis of organic compounds	Non-methane organic compounds, NMOC, EKMA, Ozone Control	

18. DISTRIBUTION STATEMENT RELEASE UNLIMITED	19. SECURITY CLASS (This Report) UNCLASSIFIED	21. NO. OF PAGES 84
	20. SECURITY CLASS (This page) UNCLASSIFIED	22. PRICE

EPA Form 2220-1 (Rev. 4-77) PREVIOUS EDITION IS OBSOLETE

DISCLAIMER

The information in this document has been funded wholly or in part by the United States Environmental Protection Agency under contract 68-02-3431 to Research Triangle Institute and contract 68-02-3513 to Radian Corporation. It has been subject to the Agency's peer and administrative review, and it has been approved for publication as an EPA document.

Mention of trade names or commercial products does not constitute endorsement or recommendation for use.

FOREWORD

Measurement and monitoring research efforts are designed to anticipate potential environmental problems, to support regulatory actions by developing an in-depth understanding of the nature and processes that impact health and the ecology, to provide innovative means of monitoring compliance with regulations, and to evaluate the effectiveness of health and environmental protection efforts through the monitoring of long-term trends. The Environmental Monitoring Systems Laboratory, Research Triangle Park, North Carolina, has responsibility for: assessment of environmental monitoring technology and systems; implementation of agencywide quality assurance programs for air pollution measurement systems; and supplying technical support to other groups in the agency, including the Office of Air, Noise and Radiation, the Office of Toxic Substances, and the Office of Enforcement.

Development of a better and more easily utilized method for measuring ambient levels of nonmethane organic compounds will help states to determine more precisely the extent of control of such compounds that is necessary to achieve and maintain compliance with applicable air quality standards for ozone. This document is intended to substantially standardize such a method, characterize its performance, and improve its availability and applicability by assisting potential users in its implementation.

Thomas R. Hauser, Ph.D.
Director
Environmental Monitoring Systems Laboratory
Research Triangle Park, North Carolina

ABSTRACT

Accurate measurements of atmospheric concentrations of non-methane organic compounds (NMOC) are necessary in the application of photochemical models that are used by states in developing the control strategies needed to achieve compliance with ambient air quality standards for ozone. NMOC measurements obtained with available continuous NMOC analyzers have often been of inadequate quality. Speciated gas chromotographic measurements, though adequate, are excessively difficult and expensive where speciated data are not needed. A simplified cryogenic preconcentration, direct flame ionization detection (PDFID) method that is sensitive and provides accurate measurements of ambient NMOC concentrations has been developed and standardized sufficiently to be recommended for use by state and local air pollution control agencies in the development of their ozone control plans. Recent refinements to the method are discussed, an automatic remote sampling system is described, and the performance (precision and accuracy) of the method is characterized, based on results from utilization of the method for NMOC analysis of 1375 air samples collected from 22 sites during the summer of 1984. A complete description of the method is also provided in an appendix.

CONTENTS

Disclaimer ii
Foreword iii
Abstract iv
Figures vi
Tables vii
Acknowledgments viii

1. Introduction 1
2. Basic PDFID Method 4
3. Refinements
   Analytical instrument 6
   Trap 7
   Water interference 7
   Sample canisters 11
   Sample collection system 15
4. Field Test and Method Performance
   Description 19
   Results 20
   Calibration drift 22
   System reproducibility 22
   Analytical precision 22
   Overall precision 23
   Accuracy 25

References 30
Appendix
   Cryogenic Preconcentration, Direct FID Method Description

FIGURES

Number		Page
1.	Schematic diagram of the PDFID analytical system.	5
2a.	Ratio of the responses of various compounds to propane response, using an open trap.	8
2b.	Ratio of the responses of various compounds to propane response, using a beaded trap.	8
3.	FID baseline shift at various moisture levels.	10
4.	Technique used to minimize water interference.	12
5.	Sample flow rate into a canister as the canister pressure rises for two simple flow control devices.	16
6.	Sampling system for integrated samples.	17
7a.	Plot of the differences between repeat analyses for 28 ambient samples versus concentration.	24
7b.	Plot of the percent differences between repeat analyses for 28 ambient samples versus concentration.	24
8a.	Plot of the differences between duplicate samples for 58 duplicate sample pairs versus concentration.	26
8b.	Plot of the percent differences between duplicate samples for 58 duplicate sample pairs versus concentration.	26
9.	Comparison of PDFID Measurements to GC speciation measurements for 336 ambient samples.	28
10.	Comparison of NMOC measurements of 120 ambient samples by 2 independent PDFID analytical systems.	29

TABLES

Number		Page
1.	Stability of Ambient Samples in Stainless Steel Canisters.	14
2.	Summary information for 1984 NMOC Monitoring Project.	21
3.	Analytical precision.	23
4.	Overall precision.	25
5.	Accuracy relative to propane standards.	27

ACKNOWLEDGMENTS

The authors acknowledge the contributions of Dr. William A. McClenny and Mr. J. Marvin McBride of the Environmental Protection Agency, Dr. R. K. M. Jayanty of the Research Triangle Institute, and Andrew Blackard, formerly with the Research Triangle Institute, in the original development of the PDFID method. We also acknowledge the work of Andrew Blackard, David Dayton, Dr. Denny Wagoner and many others associated with the Radian Corporation in carrying out the 1984 summer NMOC monitoring project, and particularly the invaluable assistance of Dr. Robert McAllister of Radian in providing statistical analysis of the project data. Finally, we acknowledge the contributions of Dr. Edwin L. Meyer and Mr. Stanley F. Sleva of the Office of Air Quality Planning and Standards, Dr. R. K. M. Jayanty and Mr. Maurice Jackson of the Research Triangle Institute, and Dr. William A. McClenny and Mr. Joseph E. Knoll of the Environmental Monitoring Systems Laboratory who technically reviewed this manuscript and provided many constructive comments.

Section 1
INTRODUCTION

Accurate measurements of ambient concentrations of nonmethane organic compounds (NMOC) are important to the control of photochemical smog because these organic compounds are primary precursors of atmospheric ozone and other oxidants. Achieving and maintaining compliance with the National Ambient Air Quality Standards for ozone thus depends largely on control of ambient levels of NMOC.

A number of photochemical dispersion models have been developed to describe the quantitative relationships between ambient concentrations of NMOC and other compounds (e.g. NO_x) and subsequent downwind concentrations of ozone.[1] An important application of such models is to determine the degree of control of NMOC that is necessary, in a particular area, to achieve compliance with applicable ambient air quality standards for ozone.[1,2] To achieve this purpose, the models require input of accurate data on ambient concentrations of NMOC.

The more elaborate theoretical models generally require detailed organic species data.[2] Such data must be obtained by analysis of air samples with a sophisticated, multicomponent gas chromatographic (GC) species analysis system.[2,3] Simpler empirical models such as the Empirical Kinetic Modeling Approach (EKMA)[1] require only total NMOC concentration data--specifically the average total NMOC concentrations from 6:00 AM to 9:00 AM.[2]

Until recently, ambient NMOC measurements for EKMA were often obtained with commercial, continuous NMOC analyzers.[2] However, measurements from these instruments have been shown to be unreliable, particularly at concentrations below about 0.5 ppmC*, due to a variety of instrument-related problems. These problems included the indirect, subtractive nature of the measurement process employed (total organic compounds minus methane),[4,5,6,7,8,9] non-uniform per-carbon response for different compounds due to oxygen interference,[8,9] inadequate sensitivity,[5,6] and interference from water vapor.[5] A technical

*By convention, concentrations of NMOC are reported in units of parts per million carbon (ppmC), which for a specific compound is the concentration by volume (ppmV) multiplied by the number of carbon atoms in the compound.

assistance document was prepared to assist users in minimizing these problems,[10] but the usefulness of NMOC measurements obtained with these instruments is nevertheless limited.

The GC speciation method[3] provides much more accurate and reliable ambient measurements. Utilizing cryogenic preconcentration followed by GC separation and flame ionization detection (FID), the technique provides quantitative, identified, species concentrations of the C_2 to C_{10} compounds typically observed in ambient air.[9] NMOC measurements may be obtained by summing the individual species concentrations. The cryogenic sample preconcentration greatly enhances the sensitivity of the method while effectively minimizing interference from methane and oxygen, allowing direct measurement of various organic species with little variation in the per-carbon response for most compounds of interest.

Although capable of providing adequate ambient NMOC measurements, the GC speciation method requires sophisticated analytical equipment, a high level of operator skill and experience, and considerable time per analysis, rendering such measurements expensive and labor-intensive. This expense is often not justified in EKMA applications where speciated data are not required.

The obvious solution that suggests itself is to develop a simplified method derived from the speciation method that eliminates the GC separation and much of the operator skill required but retains the cryogenic preconcentration for good sensitivity, the FID for selectivity, and the inert carrier gas for uniform per-carbon response. Such a simplified method employing a GC instrument without a column was used by Cox et al, to measure NMOC near Louisville, Kentucky and Nashville, Tennessee in 1980.[11] A similar system, described by Jayanty et al. utilized a simple, commercial continuous total hydrocarbon analyzer rather than a GC instrument.[12,13] These methods are indeed much simpler, faster, less expensive, and considerably easier to use than the GC speciation technique.

In its efforts to standardize this simplified preconcentration direct FID (PDFID) method, the Methods Standardization Branch (MSB) of the Quality Assurance Division, Environmental Monitoring Systems Laboratory (EMSL) conducted extensive testing of the method. Refinements to reduce interference from water vapor and improve measurement precision were developed and incorporated into the method. Also, sampling apparatus for automatic collection

of remote samples was developed and tested. Tests of both the analytical and sampling systems included laboratory performance tests and comparison of measurement performance to that of the highly regarded GC speciation method. Finally, an extensive 22-city NMOC monitoring project in the summer of 1984 provided an excellent opportunity to assess method performance and monitor operational problems during an actual field measurement application of the methodology. The results of this work are contained in the remainder of this report.

Section 2
BASIC PDFID METHOD DESCRIPTION

A detailed description of the PDFID method and operating procedure, incorporating changes and refinements developed to date, is provided in the Appendix. A brief description of the method follows.

Figure 1 shows a schematic diagram of the basic analytical apparatus. Major components include a sample volume metering system, a six-port gas valve (Seiscor Model VIII, Seismograph Service Corporation, Tulsa, OK), a cryogenic preconcentration trap, and an FID-integrator-recorder system.

The vacuum pump is used first to reduce the pressure in the vacuum reservoir to a known selected absolute pressure setting, usually about 10 kPa (75 mm Hg). With the gas valve in the sample (trapping) position, sampling is initiated by opening the sample valve. Air is drawn through the trap, which is immersed in liquid argon (-186° C). The volume of air passing through the trap is measured by the increasing pressure (diminishing vacuum) in the reservoir, and the sample flow is stopped (by closing the sample valve) when a second selected pressure is reached. The trap condenses NMOC while permitting air and methane to pass through. During the trapping mode, helium carrier gas passes through the gas valve directly to the FID.

Following the trapping mode, the gas valve is switched to the inject position, directing the helium carrier gas through the trap, in the direction opposite to the previous sample flow, before passing to the FID. The cryogen is then removed, and the trap is heated to approximately 90° C. Organic compounds collected in the trap revolatilize and are swept into the FID by the carrier gas. The resulting peaks are integrated and converted to ppmC by an NMOC calibration curve, prepared previously with propane-in-air concentration standards. Use of the same precise reservoir pressure readings for each trapping cycle results in a constant sample volume and allows calibration of the system with known concentration standards without knowledge of the actual sample volume.

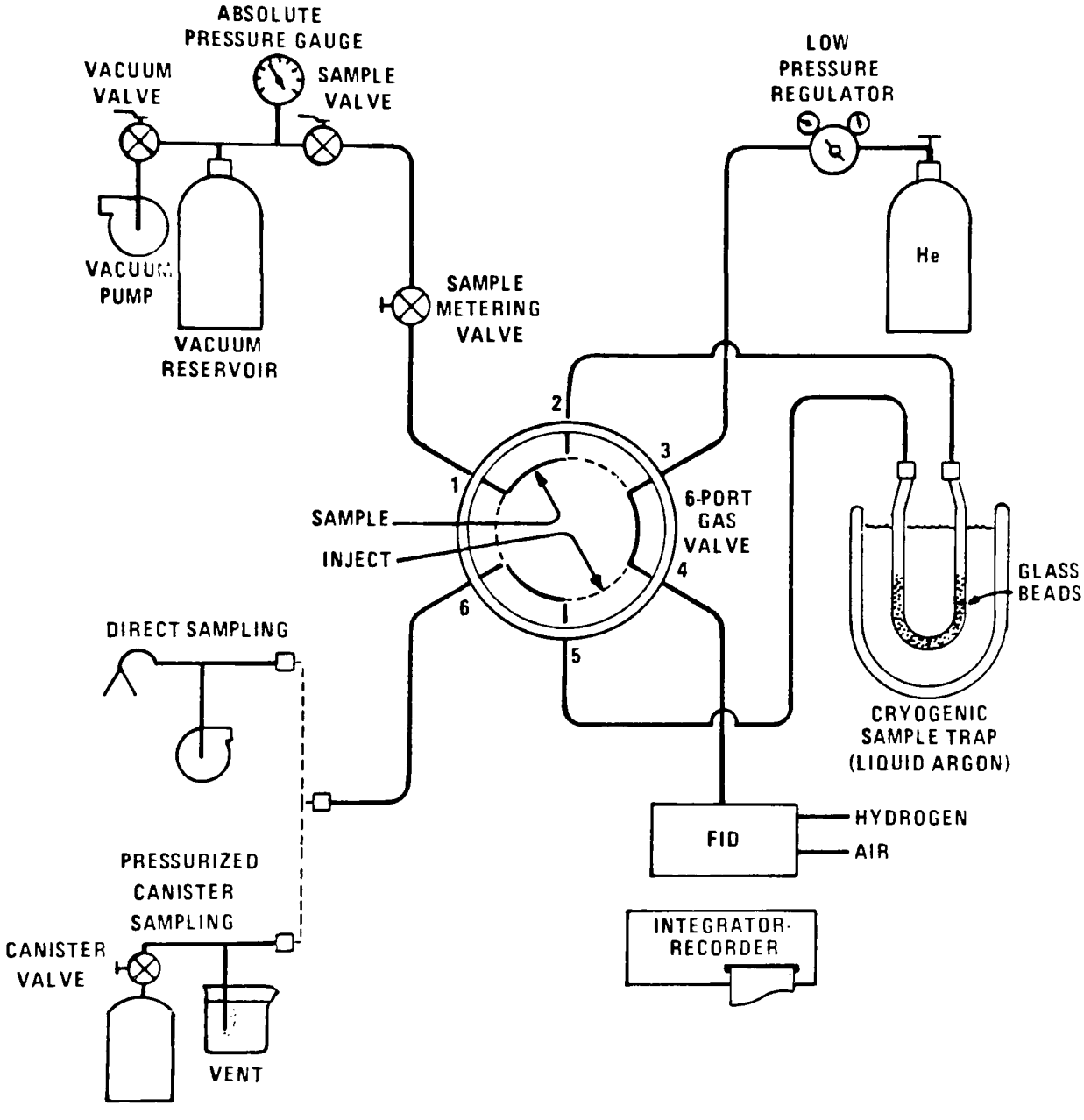

Figure 1. Schematic diagram of the PDFID analytical system.

Section 3
REFINEMENTS

ANALYTICAL INSTRUMENT

The method described by Jayanty, et al.[13] utilized a modified commercial total hydrocarbon analyzer, rather than a chromatograph, in the analytical system to minimize equipment cost. However, this instrument lacked a signal integrator, temperature control for the FID, and precision flow control for carrier and FID support gases. Most recent model gas chromatographic instruments contain a very sophisticated signal integrator-recorder, a high-quality temperature-controlled FID, and precision gas flow controls, as well as a temperature-programmable oven, provision for controlling the valve temperature, and a sequence timer. These features make such an instrument very advantageous for the method to improve analytical precision even though no chromatographic column is required. Gas chromatographs are commonly available in many laboratories, and a chromatograph could be used on an intermittent or time-share basis, if necessary.

Several other potential advantages of a gas chromatograph may also be realized, depending on the degree of integration or modification of the instrument to the method requirements. If the chromatograph has a multiport valve, it may be suitable for use with the method. In this case, or if any pneumatically operated valve is used, the chromatograph may be used to control the valve as well as the entire analytical cycle. The chromatograph oven may also be conveniently used to heat the trap during analysis of the trapped NMOC.

In the system used by MSB, a Seiscor Model VIII pneumatic 6-port valve and the trap were mounted inside the oven of a Hewlett-Packard Model HP-5840A gas chromatograph. Rather than using a beaker of warm water to heat the trap, as described by Jayanty, et al.,[13] the oven was programmed to heat to a maximum temperature of 90° C. However, as long as the oven door was open, the oven did not heat. As soon as the dewar of liquid cryogen was removed from the trap and the oven door closed, the trap was heated to about 90° C in approximately one minute in a manner that was repeatable from cycle to cycle.

Mounting the valve inside the oven allowed it to operate at an average temperature somewhat above ambient to avoid possible loss of organic compounds in the valve. In a subsequent, more sophisticated system used in the field monitoring project (described later), the valve was mounted outside the oven on an insulated block thermostatically controlled by the chromatograph (Hewlett-Packard Model 5880) such that the valve was maintained at a constant temperature of 95° C. In both systems, the valve and trap were located close to each other and close to the FID to minimize the lengths of interconnecting lines.

TRAP

Although most cryogenic hydrocarbon traps described in the literature are packed with glass beads or other packing,[14] the system described by Jayanty, et al.[13] specified an open (unpacked) tubular trap 120 cm long and coiled into 8 loops. Using the same open trap used by Jayanty, we were unable to duplicate the equal response to known concentrations of various paraffinic and olefinic hydrocarbons reported by Jayanty. Our system's response to similar compounds, presented in Figure 2a, showed considerable and unpredictable variability from compound to compound. However, when the open trap was replaced with a short (30 cm), single-loop, stainless steel trap packed with 60/80 mesh glass beads, the response was much more uniform, as shown in Figure 2b. The packed trap was also more convenient to use and appeared to warm more uniformly, resulting in symmetrical peaks that were repeatable. Peaks with the open trap often had an unsymmetrical shape and the peak shapes were not repeatable, as was also reported by Jayanty.

WATER INTERFERENCE

In testing the method, a marked decrease in precision was noted when ambient samples were analyzed compared with analysis of laboratory standards. Similarly, preliminary comparisons with the GC speciation technique showed greater variation for ambient samples than expected. The obvious difference between laboratory standards and ambient samples is in moisture content, the former being very dry while the latter usually contain considerable moisture. Jayanty reported negligible water vapor interference,[6] and in routine opera-

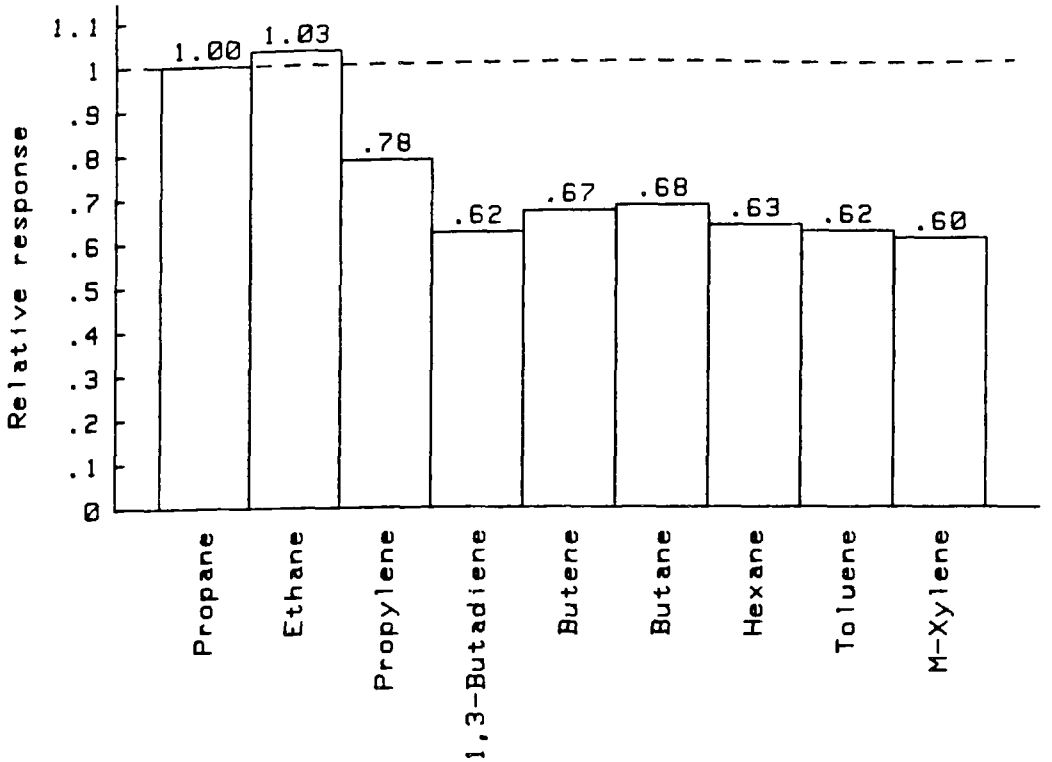

Figure 2a. Ratio of the responses of various compounds to propane response, using an open trap.

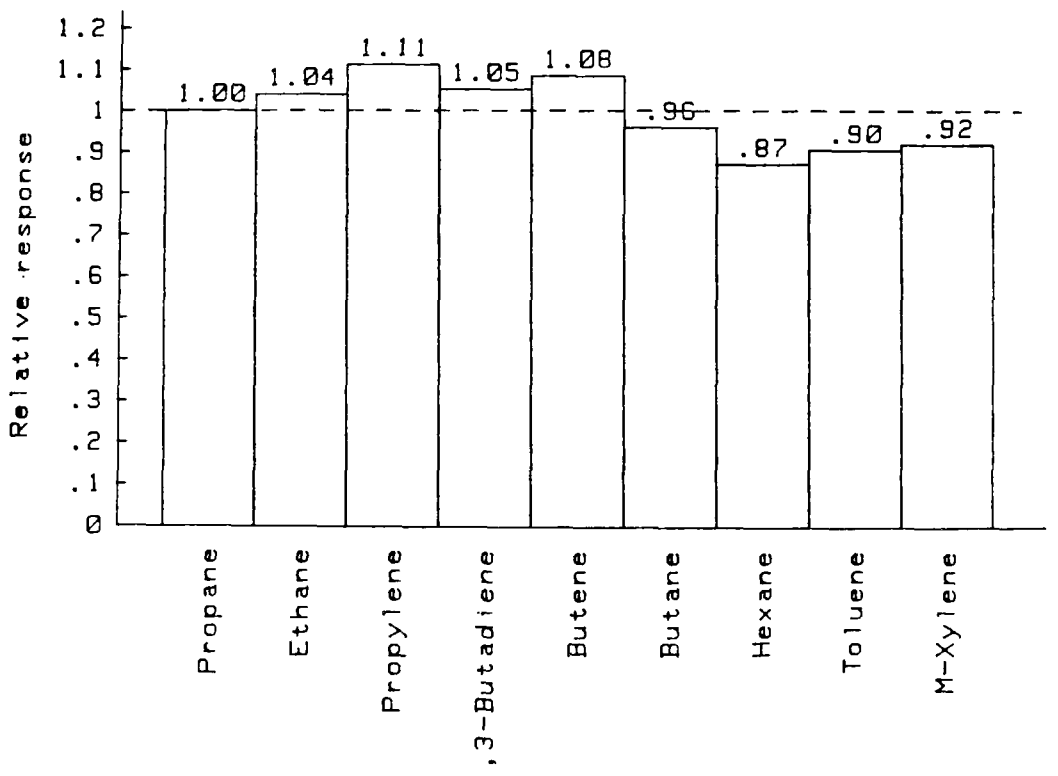

Figure 2b. Ratio of the responses of various compounds to propane response, using a beaded trap.

tion of the analytical system, no obvious effects due to moisture were indicated. However, when the recorder scale was greatly expanded and traces recorded for humidified zero air were compared to traces recorded for dry zero air, it was clear that moisture caused a definite positive shift in the FID baseline. This shift started as soon as the trap was warmed, and is illustrated in Figure 3. The amount of the baseline shift seemed to be constant for different levels of humidity, but the duration of the shift varied, being roughly proportional to the total moisture content. The base line returned to normal after the moisture had apparently been completely flushed out of the trap by the flow of carrier gas.

In our system, the chromatograph was used to control the valve and analytical cycle. A manifestation of this configuration was that the instrument automatically returned the valve to the trapping mode at the end of each analytical cycle. This required that the duration of the analytical cycle be long enough (~ 3 minutes) to allow complete flushing of the moisture from the trap by the carrier gas before the valve returned to the trapping position. The integrator continued to operate during this time, which would present no problem with a stable baseline. However, with the positively shifted baseline, the integrator continued to accumulate area, and even though the shift was small, the area accumulated over the extended duration of the analytical cycle caused a significant positive bias proportional to moisture level.

Further investigation indicated that for very humid samples, the duration of the baseline shift could extend past the end of the analytical cycle. This situation resulted in two detrimental effects: (1) the trap was not completely dry at the beginning of the next cycle, and (2) the integrator is designed to interpret the reading at the beginning and end of the cycle as baseline references, and it constructs a baseline based on those points. When the baseline was still shifted due to moisture at the end of the analytical cycle, the integrator constructed an upward sloping baseline, which caused a substantial difference in the peak area calculated by the integrator. This difference in the baseline for different moisture levels obviously caused considerable variability in the analytical results--even among replicate analyses of the same sample canister--because the moisture content of successive samples from a canister could increase as the canister pressure decreased if the canister contained condensed water. Since the canisters were pressurized

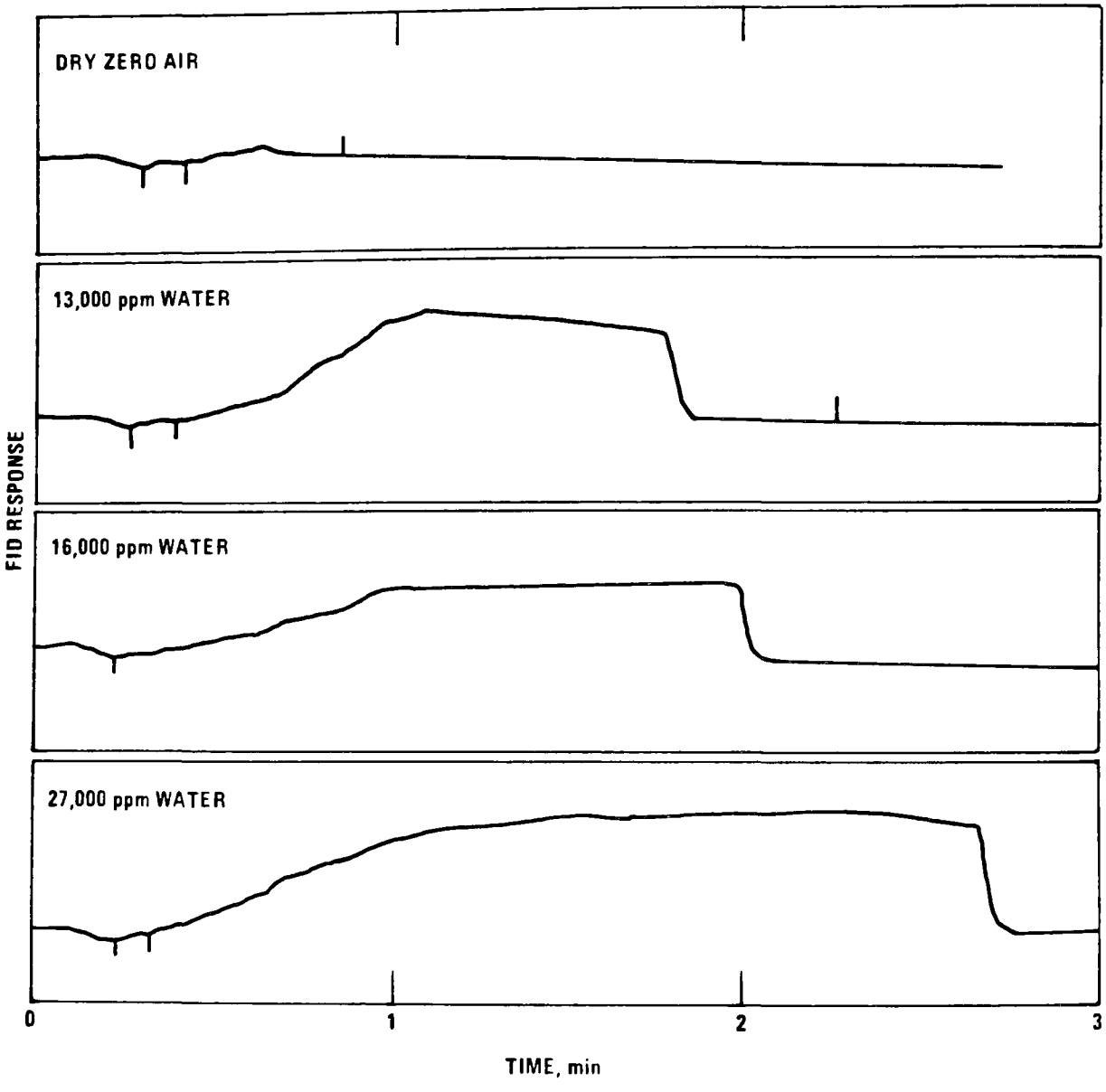

Figure 3. FID baseline shift at various moisture levels (expanded vertical scale).

to about three atmospheres (absolute), condensation in the canister would be expected for any sample where the ambient relative humidity was over about 30 per cent.

Attempts were made to remove the moisture content of the sample air by passing it through a Nafion tube (Purma-Pure) dryer, but without success. A number of small Purma-Pure dryers were tested and did reduce the moisture sufficiently to avoid a significant zero shift. However, all the dryers outgassed organic compounds. After long purging with dry zero air, the outgassing could be reduced to near zero with dry air; but passing wet air through the dryer would cause the outgassing to start again. It may be possible to clean such a dryer to the point where it could be used for reducing moisture. However, we made no further attempts to use the Nafion dryers.

Instead, the moisture problem was minimized by reducing the duration of the integration period to a value just sufficient to include the NMOC peaks. This value, determined empirically, allowed integration of the NMOC peak area of the ambient samples tested but eliminated most of the area caused by the water offset. More of the water-related area was eliminated by the integrator, which constructed a positively sloped baseline as illustrated in Figure 4. There was enough moisture even in fairly dry ambient air samples to insure that the shift always extended beyond the end of the integration period. Thus, the area was always calculated the same way. This technique reduced the effect of the moisture to such a degree that the system showed little bias even though calibrated with dry gases. The short analytical cycle did not allow the trap to dry out before the valve switched back to the trapping mode, so to adequately purge the trap, the valve was manually changed to the inject mode for two minutes (determined empirically) at the end of each analytical cycle. This technique was adopted and resulted in good precision and good agreement with the speciation technique, as described later.

SAMPLE CANISTERS

Although the method can be used for direct, in situ ambient NMOC measurements, greater utility is achieved by collecting ambient air samples remotely for analysis at a central site. The most reliable type of sample container appears to be the passivated stainless steel canister.[3] The relative stability of hydrocarbon compounds in such canisters has been demonstrated.[3]

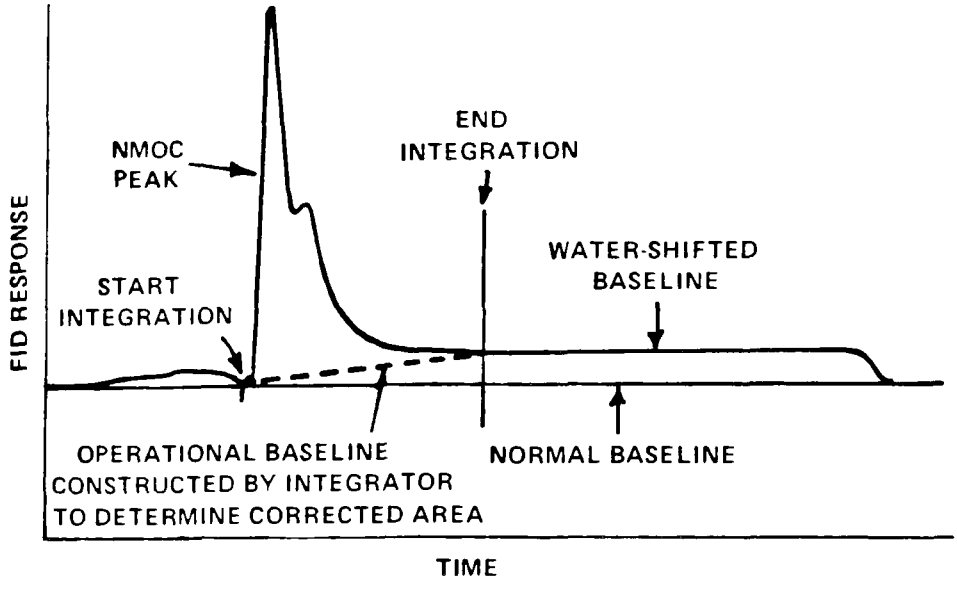

Figure 4. Technique used to minimize water interference. The amount of baseline shift shown is exaggerated with respect to the area of typical ambient NMOC peaks to more clearly illustrate the construction of the operational baseline.

Nevertheless, we wanted to (a) verify that our canisters were not contaminated, (b) verify that they could be easily and reliably cleaned after each sample, (c) establish a reliable cleaning procedure, and (d) confirm short- and long-term stability of ambient samples in the canisters.

The canisters used were an all stainless steel, 6-liter, spherical type manufactured by Demaray Scientific Instruments, Ltd., Pullman, Washington. The inside surfaces of these canisters had been passivated by the manufacturer using the SUMMA process (Molectrics, Carson, CA).

Analyses of canisters filled with zero air compared well with direct analysis of the zero air, confirming that the canisters were not contaminated at the start of testing.

A basic cleaning procedure consisted of alternately evacuating the canister to a vacuum of < 5 mm Hg, then pressurizing it to about 200 kPa (30 psig) with zero air, repeating this cycle three times. The last fill with zero air was analyzed to verify that the cylinder was clean before the final evacuation. To test this procedure, the canisters were used to collect several ambient air samples near a high-traffic roadway and then subjected

to the cleanup procedure after each sample. Some of the canisters were heated in an oven to 150° C during the cleaning, while others were cleaned at room temperature. In all tests, the analysis of the final zero air fill showed little difference from the direct analysis of the zero air, indicating that the cleaning procedure was effective and reliable. Since no advantage was apparent from heating the canisters during cleaning, the room temperature procedure was adopted.

The stability of various hydrocarbon compounds in stainless steel canisters has been tested by many researchers. There is substantial evidence to indicate that the stability of such compounds is excellent for periods of several days to two to three weeks.[3] The stability of 11 ambient NMOC samples stored in canisters for periods of 7 to 21 days is shown in Table 1. The samples were obtained during June, July and August of 1985 from a variety of eastern and southern areas of the country and ranged in concentration from about 0.15 ppmC to about 2.5 ppmC. Each sample was analyzed at seven-day intervals with the analyses compared to the original (day 0) analysis. Both the actual differences and the percent differences from the original value are shown.

Each time sample air is withdrawn from a canister for an analysis, the pressure in the canister decreases. Thus, the test results in Table 1 include any effect that may be caused by the change of sample pressure in the canister (which would also be expected to affect the amount of moisture in the sample). As a control experiment, each of seven canisters were analyzed repeatedly on the same day as the canister pressure decreased. All of these analyses results were within 6% of the original analysis except one very low level sample for which a difference of 18% was observed, but this difference was only 0.032 ppmC. From this data and from Table 1, it can be concluded that relatively little degradation of the sample occurs, either with pressure change or with storage of the NMOC sample in the canister for periods of up to three weeks. In spite of this evidence indicating general stability, however, it seems prudent to analyze canister samples as soon as possible after collection.

Table 1. STABILITY OF AMBIENT SAMPLES IN STAINLESS STEEL CANISTERS

		Analysis, ppmC				Difference, ppmC			Difference, percent		
CAN	SAMPLED	DAY 0	DAY 7	DAY 14	DAY 21	DAY 7	DAY 14	DAY 21	DAY 7	DAY 14	DAY 21
21	6/19/85	.413	.399	.447		-.014	.034		- 3.4	8.2	
41	6/26/85	.154	.178	.202		.024	.048		15.6	31.2	
146	6/19/85	.475	.425	.426		-.050	-.049		-10.5	-10.3	
167	5/22/85	1.076	1.089	1.168	1.041	.013	.092	-.035	1.2	8.6	-3.3
174	5/22/85	1.170	1.151	1.180	1.100	-.019	.010	-.070	- 1.6	0.9	-6.0
196	6/06/85	2.115	2.055	1.780		-.060	-.335		- 2.8	-15.8	
179	7/09/85	1.050	1.014			-.036			- 3.4		
77	7/17/85	.440	.420	.362		-.020	-.078		- 4.5	-17.7	
154	7/24/85	.695	.676	.678		-.019	-.017		- 2.7	- 2.4	
107	8/01/85	2.284	2.257	2.070		-.027	-.214		- 1.2	- 9.4	
43	7/26/85	2.500	2.472	2.590		-.028	.090		- 1.1	3.6	
					N =	11	10	2	11	10	2
					Mean =	-.021	-.042	-.053	- 1.3	-.3	-4.6
					Standard Deviation =	.024	.137	.025	6.3	14.5	1.9

SAMPLE COLLECTION SYSTEM

EKMA models generally require 3-hour integrated NMOC measurements over the 6 AM to 9 AM period. A technique used previously for collection of such integrated samples is to first collect the sample in a Mylar or Tedlar bag over the required time period. At the end of the sample period, the sample is transfered into a stainless steel canister[3] because the integrity of the sample can degrade rapidly in the bag. Disadvantages of this technique include added risk of contamination from the bags, permeation of compounds into or out of the bags, difficulty in cleaning the bags, possible bag leaks, and the inconvenience of the additional steps necessary to transfer the sample to a second container.

It would be much better and far more convenient if the sample could be collected directly into the canister. The chief problem is the difficulty of maintaining a constant, low flow rate of sample air into the canister as the canister pressure rises during the collection period. Since the sample must pass through any flow control device used, it must be of a simple, non-contaminating design. Electronic flow controllers are expensive and may be subject to calibration drift. Pressure regulators pose significant potential for sample contamination, and capillaries do not control the flow rate adequately without pressure regulation. Critical orifices control flow rates better, but all of these control devices require a large pressure drop to maintain criticality. This large pressure difference requires a large pump (which must be of a non-lubricated, non-contaminating design), and the high pressure causes the pump to operate at considerably elevated temperatures, causing possible changes or contamination of the sample as it passes through the pump.

Figure 5 compares the flow control characteristics of a capillary configured between an air pump and a 6-liter canister with a short capillary (hypodermic needle) located in the inlet of the pump. In both cases, the pump was a stainless steel, metal bellows type (model MB-151, Metal Bellows Company, Sharon, MA) with a maximum outlet pressure of about 275 kPa (40 psig). With the capillary (or orifice) located between the pump outlet and the canister, the flow drops considerably (-37% for the capillary) as the canister pressure rises to 100 kPa (15 psig). However, when a short capillary is

located on the vacuum side of the pump, the flow rate remains quite constant, dropping only -9.8% for the same condition. If a lower final pressure can be accepted in the canister (i.e., lower total sample volume), then the flow decrease is less (-5.3% to 76 kPa (11 psig)). Also, temperature rise in the pump is minimal when the orifice is located on the vacuum side of the pump.

The flow rate can be adjusted by selecting a capillary or orifice of appropriate size. Glass or sapphire orifices are available, and hypodermic needles, although not really orifices, work acceptably and are inexpensive and readily available. A 30 gauge needle, 2.54 cm long provided about the

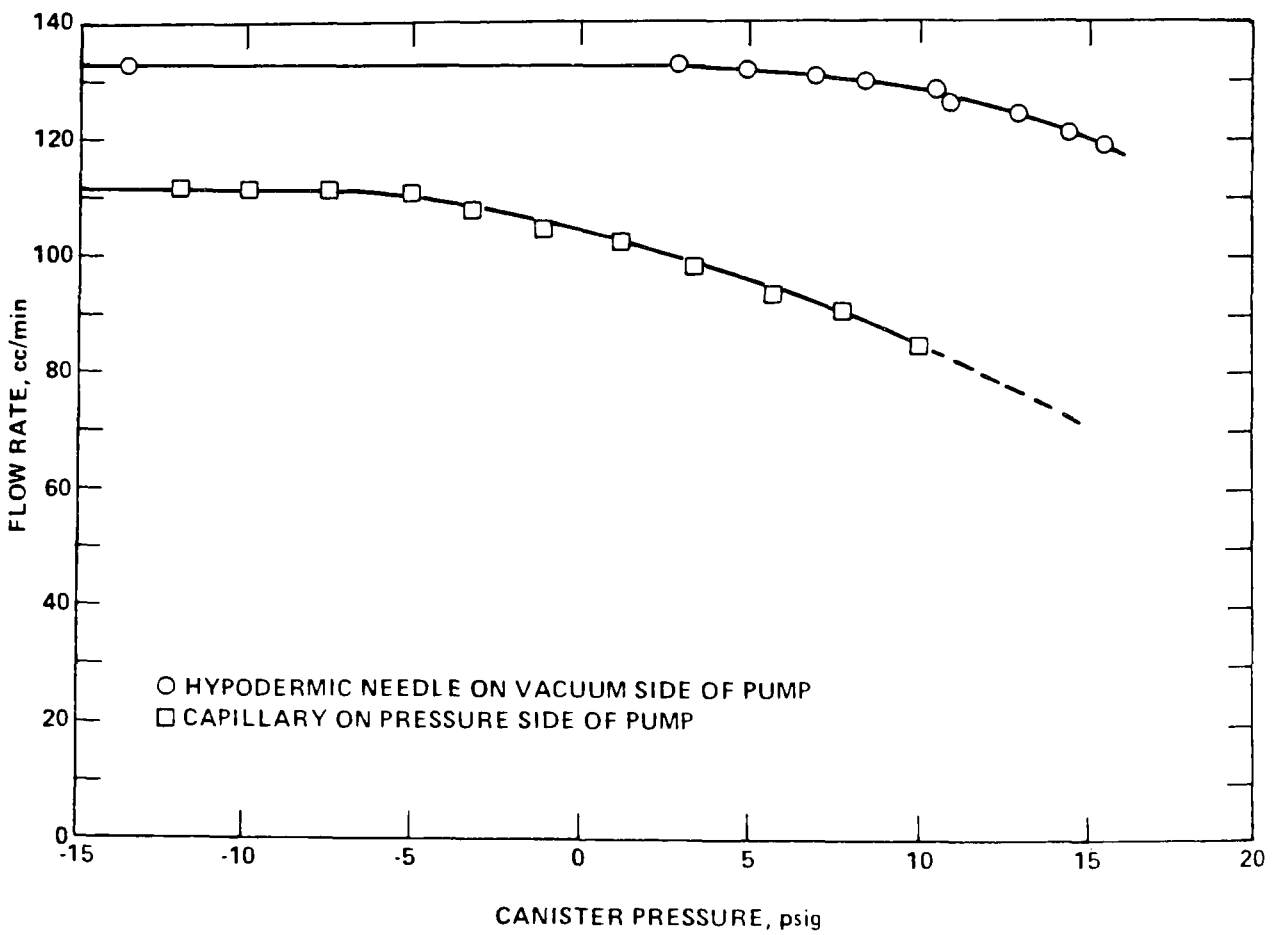

Figure 5. Sample flow rate into a canister as the canister pressure rises, for two simple flow control devices.

right flow rate to fill a 6-liter canister to 100 kPa (15 psig) over a three-hour period (~ 67 cm^3/min). Figure 6 illustrates the sampling configuration.

A final minor problem with direct sampling into canisters concerns unattended operation. A timer is easily configured to start and stop the pump at the desired times. But since the canister is evacuated prior to the sampling period and pressurized following the sampling period, it must be tightly valved off during non-sampling periods to prevent leakage and valved on during the sampling period. A conventional solenoid valve would serve this purpose, but its temperature rises substantially when energized during sampling, jeopardizing the integrity of the air sample. A special type of bistable solenoid valve (Skinner model V52d2A1100 valve with Viton seal and Magnelatch coil) that requires energization only briefly to open or close overcomes this problem. This valve may be operated with a special (e.g. electronic) timer that can be programmed to energize the valve for brief

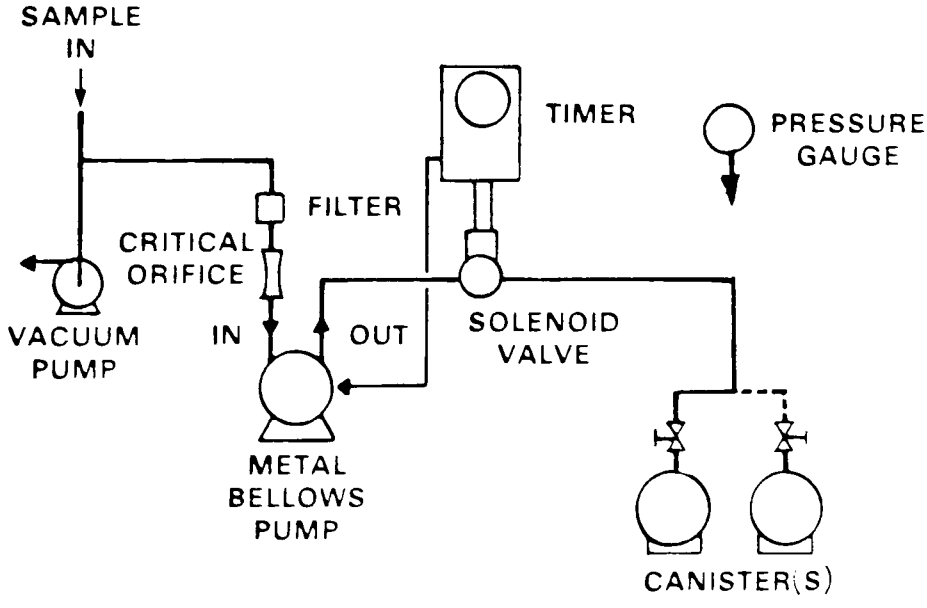

Figure 6. Sampling system for integrated samples.

periods at the appropriate turn-on and turn-off time. Alternatively, the valve may be controlled with the same conventional-type mechanical timer that operates the pump, by using a simple capacitive circuit to provide the brief power pulses needed for the valve. More details on the sampling system are provided in the method description in the Appendix. Twenty-two sampling systems based on the configuration described above were used very successfully in the 1984 summer NMOC monitoring project.

Section 4
FIELD TEST AND METHOD PERFORMANCE

DESCRIPTION

During the summer of 1984, the PDFID method was used to obtain 6 AM to 9 AM NMOC concentration measurements in 22 urban sites in the eastern and central areas of the United States.[15,16] These data were needed by participating states or local agencies to prepare State Implementation Plans (SIP) for ozone control, using EKMA to calculate the reduction in NMOC levels necessary to achieve compliance with the National Ambient Air Ozone Standards. MSB participation in this project provided an excellent opportunity to assess the performance of the method in an actual, typical field application and with a large data base.

Early in the planning of the project, it was decided that all NMOC samples from all 22 cities would be collected in canisters and shipped to a common laboratory located at Research Triangle Park (RTP) rather than equip each city with a separate analytical system for local analysis. The rationale for this decision was based on several considerations: (1) the method was new and unproven, and any operational problems could be resolved more expeditiously at a common RTP laboratory; (2) considerable experience and expertise was needed to assemble, set up, and test two new dual analytical systems and train the analysts, and these functions could best be handled at a common RTP laboratory; (3) the analytical system had not been cost-optimized, and the cost of fabricating 22 analytical systems greatly exceeded the costs associated with shipping and analysis at an RTP laboratory; (4) shipping all samples to RTP allowed better control of the analytical variability and assessment of method performance; and (5) central analysis at RTP allowed for re-analysis of some samples by GC for comparison, for quality assurance, and for use of the speciated data by EPA and the participating state agencies.

The sampling systems were configured as shown in Figure 6 and used a Metal Bellows Model MB-151 pump, Skinner Magnelatch solenoid valve, mechanical timer with capacitive pulse circuit, and 30 gauge hypodermic needle with a stainless steel filter on the pump inlet to control the sample flow rate at

about 65 cm^3/min for a 3-hour integrated sample. Occasionally, a larger hypodermic needle was substituted so that two canisters could be filled simultaneously over the 3-hour period for assessment of overall measurement precision. Canisters containing the collected air sample were shipped daily to the RTP laboratory in special, all-metal shipping containers. Additional details of the project are available in Reference 16.

To accommodate the 22 daily samples plus calibration and quality control samples, four identical PDFID analytical systems were fabricated and implemented on two Hewlett-Packard Model 5880 dual chromatographs. Samples were randomly assigned to one of the four analytical systems for analysis, and analysts were regularly alternated between the two dual systems to avoid systematic bias.

Each 6-liter canister was pressurized to approximately one atmosphere gauge pressure and thus contained about six liters of available sample above atmospheric pressure. Since less than 0.5 liter of sample was needed for analysis, multiple analyses of each sample were possible. To reduce variability, two replicate sequential analyses were made routinely on each sample and averaged, with a third analysis made if the first two were not in reasonable agreement (standard deviation $\leq$ 0.2 ppmC). Some randomly selected samples were re-analyzed later the same day--again in duplicate--on either the same or a different system, for assessment of analytical precision. Further, some samples were analyzed on a fifth, independent system operated by MSB. Selected samples were also subjected to a complete species analysis by GC. After all analyses had been performed, the canisters were flushed, re-evacuated, and sent to the sampling sites for additional samples.

RESULTS

In all, 1375 valid samples, ranging in concentration from 0.06 ppmC to 4.75 ppmC, were analyzed from the 22 sites.[16] Fifty-eight of these were duplicate samples collected simultaneously in two paired canisters. Table 2 lists the 22 cities and the maximum and mean of the NMOC concentrations measured at each site. Also listed in Table 1 are the sampling dates and the per cent completeness (number of valid samples obtained divided by the number expected) for each site. Overall completeness for the project was 90.6 per cent.

Table 2. SUMMARY INFORMATION FOR 1984 NMOC MONITORING PROJECT

Site Location	First Scheduled Sampling Date	Final Scheduled Sampling Date	Total No. Scheduled Sampling Days	Total No. Duplicates	No. Valid Samples	Percent Completeness	NMOC, ppmC Mean	NMOC, ppmC Max
Akron, OH	6/27/84	9/28/84	68	3	68	96	0.79	2.95
Atlanta, GA	7/11/84	9/28/84	58	3	55	90	0.79	4.27
Beaumont, TX	6/18/84	9/28/84	75	2	66	86	0.89	3.84
Birmingham, AL	7/11/84	9/28/84	58	1	56	95	0.99	2.91
Charlotte, NC	7/11/84	9/28/84	58	4	60	97	0.54	2.52
Chattanooga, TN	7/11/84	9/28/84	58	2	46	77	1.34	4.08
Cincinnati, OH	6/27/84	9/28/84	68	1	65	94	0.93	3.93
Clute, TX	6/18/84	9/28/84	75	5	72	90	0.82	4.31
Dallas, TX	6/18/84	9/28/84	75	4	74	94	0.97	2.57
El Paso, TX	6/18/84	9/28/84	75	4	69	87	0.93	2.45
Fort Worth, TX	6/18/84	9/28/84	75	3	69	88	0.97	3.81
Indianapolis, In	7/11/84	9/28/84	58	3	59	97	0.80	2.50
Kansas City, MO	6/27/84	9/28/84	68	2	68	97	0.79	2.76
Memphis, TN	7/11/84	9/28/84	58	1	52	88	1.43	4.75
Miami, FL	8/13/84	9/28/84	35	3	31	82	1.32	3.70
Philadelphia, PA	6/27/84	9/28/84	68	2	63	90	1.02	3.10
Richmond, VA	6/27/84	9/28/84	68	1	64	93	0.53	1.22
Texas City, TX	6/18/84	9/28/84	75	4	69	87	0.92	4.74
Washington, DC	6/27/84	9/28/84	68	3	63	89	0.81	2.93
West Orange, TX	6/18/84	9/28/84	75	3	71	91	0.69	3.35
West Palm Beach, FL	6/18/84	9/28/84	75	2	72	94	0.54	2.63
Wilkes-Barre/Scranton, PA	6/27/84	9/28/84	68	2	63	90	0.45	0.96
TOTAL			1459	58	1375			
OVERALL AVERAGE					62.5	90.6	0.853	

CALIBRATION DRIFT

Each analytical system was calibrated at the beginning and at the end of each day's analyses, using clean, dry, zero air and propane standards traceable to an NBS propane Standard Reference Material (SRM), No. 1665b. Zero drift during the day, defined as the final zero reading minus the initial zero reading, ranged from -0.016 ppmC to +0.013 ppmC using data from all four analytical systems. The mean of the zero drift was 0.00016 ppmC, with a standard deviation of 0.00219 ppmC. Daily span drift, defined as the difference between each day's end calibration value and the initial calibration value divided by the initial value, ranged from -10.1% to +14.1%. Mean span drift was +1.47%, with a standard deviation of 4.06%.

SYSTEM REPRODUCIBILITY

To learn if there were any differences between the four analytical systems, four samples of local ambient air were collected on each of four days (June 14, 15, 18, and 19, 1984) before the monitoring program began. Each sample was analyzed by each of the four systems for a total of 60 analyses (4 analyses were missing).* The NMOC concentrations ranged from about 0.14 ppmC to 1.25 ppmC. An analysis of variance (ANOVA) of these measurement data showed that there was no significant difference among the four instruments at the 0.05 level. In addition, the ANOVA indicated that the canisters did not contribute significantly to the differences in analytical results, confirming that the canisters could be used, cleaned, and reused successfully.

ANALYTICAL PRECISION

Known concentration standards of specific compounds are not adequately representative of ambient mixes of NMOC. Therefore, analytical precision for the four analytical systems combined was assessed from the differences observed between the original analyses and repeat analyses later in the same day (or the next day) for 28 of the samples. As shown in Table 3, the 28 differences ranged from -0.14 to +0.270 ppmC with a mean of 0.0250 ppmC and a standard deviation of 0.1067 ppmC. Since the mean is substantially smaller

*As noted previously, each such analysis was actually the average of two or possibly three sequential, replicate analyses.

than the standard deviation, we can conclude that the mean is not significantly different than zero. This suggests that the time delay between the first and second analyses had no significant effect on the concentration measurement.

Table 3. ANALYTICAL PRECISION

Number of repeat analyses	28
Range of differences	-0.14 to +0.27 ppmC
Mean difference	+0.0250 ppmC
Standard deviation of differences	0.1067 ppmC
Range of per cent differences	-38.3 to +30.7%
Mean per cent differences	0.2%
Standard deviation of per cent differences	12.7%

When the absolute values of the differences in ppmC are plotted against concentration (Figure 7a), there is indication of a proportional relationship--i.e., the differences tend to be proportional to the concentration. However, when the absolute value of the per cent differences (concentration difference divided by the average of the two analyses) are plotted (Figure 7b), little or no concentration dependence is indicated. Accordingly, the analytical precision may be described as the standard deviation of the per cent differences, which is 12.7%. The average of the per cent differences is 0.2, which, as expected, is not significantly different from zero.

OVERALL PRECISION

Overall precision was assessed from the differences between the analyses of 59 pairs of duplicate samples collected simultaneously in duplicate, paired canisters. Accordingly, this overall precision assessment includes both analytical variability and variability contributed by collection and storage of the air samples in the canisters. The absolute value of one of

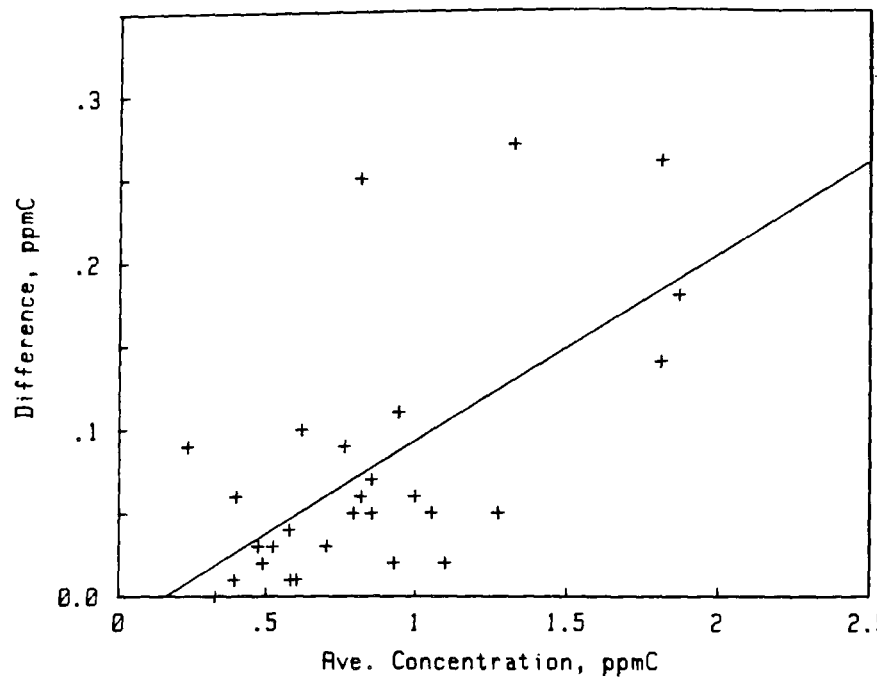

Figure 7a. Plot of the differences between repeat analyses for 28 ambient samples versus concentration.

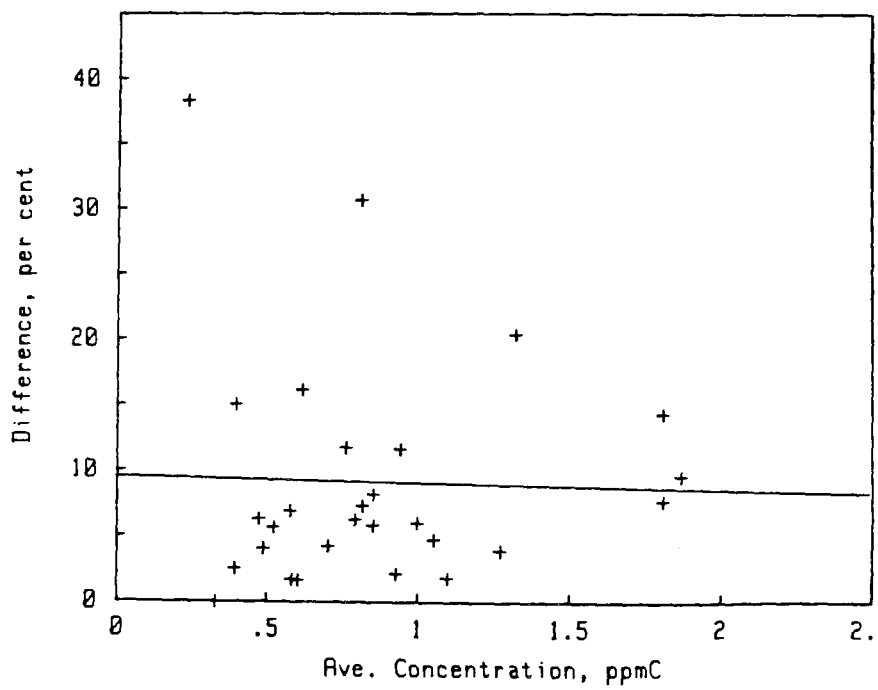

Figure 7b. Plot of the per cent differences between analyses for 28 ambient samples versus concentration.

the 59 differences was much larger (0.94) than the absolute value of the other differences (see Table 4) and was clearly an outlier. Table 4 gives overall precision statistics for the remaining 58 sample pairs, after removing the outlier pair. The differences ranged from -0.41 to +0.22 ppmC, with a mean difference of -0.026 ppmC and standard deviation of 0.119 ppmC.

Table 4. OVERALL PRECISION

Number of duplicate sample pairs	58
Range of differences	-0.41 to +0.22 ppmC
Mean difference	-0.026 ppmC
Standard deviation of differences	0.119 ppmC
Range of per cent differences	-67.8% to 47.8%
Mean per cent difference	-3.1%
Standard deviation of per cent differences	17.4%

A plot of the absolute value of the differences (Figure 8a) shows very little concentration dependence, and a plot of the absolute values of the per cent differences (Figure 8b) shows some negative correlation. Thus, the standard deviation of the differences (not per cent differences) is probably the best way to describe overall precision. However, Table 4 lists both the difference and per cent difference statistics for comparison with Table 3. Note that the overall precision (Table 4) is only slightly worse than the analytical precision (Table 3), indicating that collecting and storing the air samples in the canisters added relatively little to the overall variability.

ACCURACY

Because the NMOC measurements encompass an unspecified mixture of various organic compounds, absolute accuracy is undefined. Accuracy relative to internal propane standards was assessed with audit samples. These audit

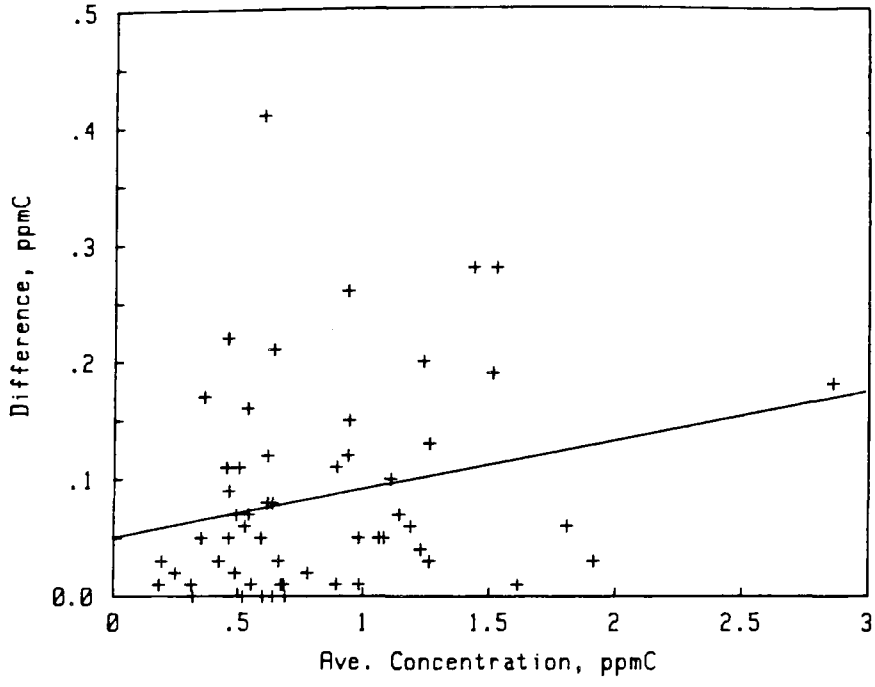

Figure 8a. Plot of the differences between duplicate samples for 58 duplicate sample pairs versus concentration.

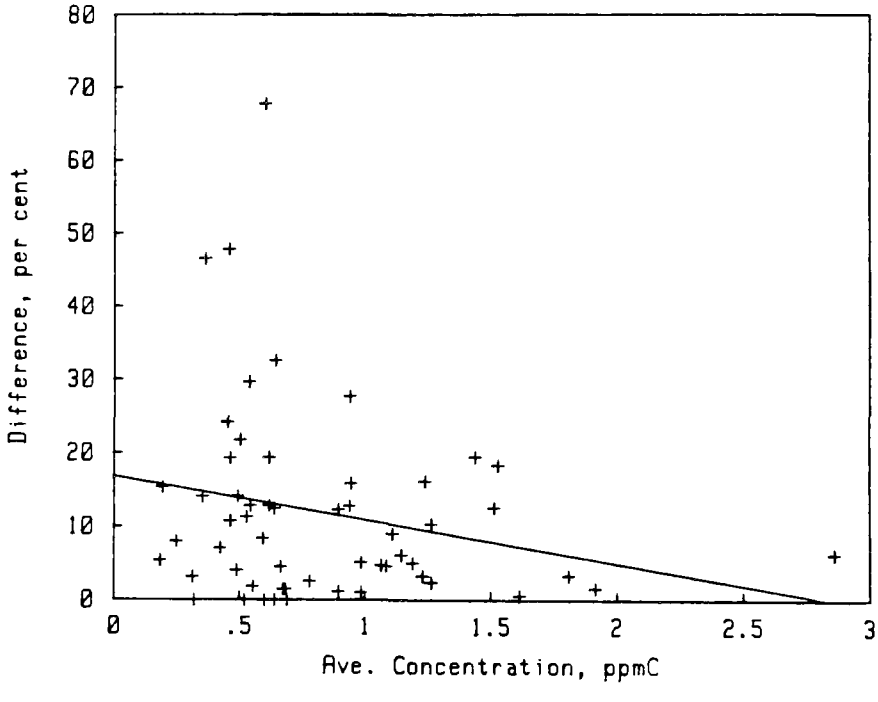

Figure 8b. Plot of the per cent differences between duplicate samples for 58 duplicatee sample pairs versus concentration.

samples were prepared by diluting NBS-traceable propane standards with zero air into clean canisters at a pressure similar to the pressure of the ambient samples. Table 5 lists the regression slopes and intercepts for the measured concentrations versus the calculated propane audit concentrations for the four analytical systems and for all systems combined. The combined data suggest that the slope was slightly greater than 1.0000, indicating a slight overall positive bias in the measurement system.

Table 5. ACCURACY RELATIVE TO PROPANE STANDARDS

Channel	N*	Slope (95% Cont. Interval)	Intercept (95% Cont. Interval)	Correlation Coefficient
A	21	1.02329 (±0.02474)	0.01461 (±0.02585)	0.9987
B	21	1.01689 (±0.01540)	0.02045 (±0.01610)	0.9995
C	15	1.02905 (±0.04208)	0.04442 (±0.07158)	0.9977
D	16	1.02331 (±0.05264)	0.03655 (±0.08711)	0.9960
All Channels Combined	73	1.02962 (±0.01539)	0.02096 (±0.0277)	0.9980

*Number of audit concentrations.

Accuracy relative to GC speciation analysis was assessed by comparing the results from 336 samples that were independently reanalyzed by GC speciation (sum of species) analysis by EPA's Atmospheric Sciences Research Laboratory. A linear, orthogonal regression of these data is illustrated in Figure 9. The resulting slope of 1.081 and intercept of 0.015 indicated a modest bias of approximately +8% for the PDFID method compared to GC speciation analysis.

Accuracy relative to the fifth independent PDFID analysis system, operated by the MSB, was assessed by comparing the results from 120 samples that were reanalyzed by the independent MSB system. An orthogonal linear regression resulted in a slope of 1.032 and an intercept of -0.1891. This comparison is illustrated in Figure 10, and shows the generally good agreement between the two independently operated PDFID analytical systems.

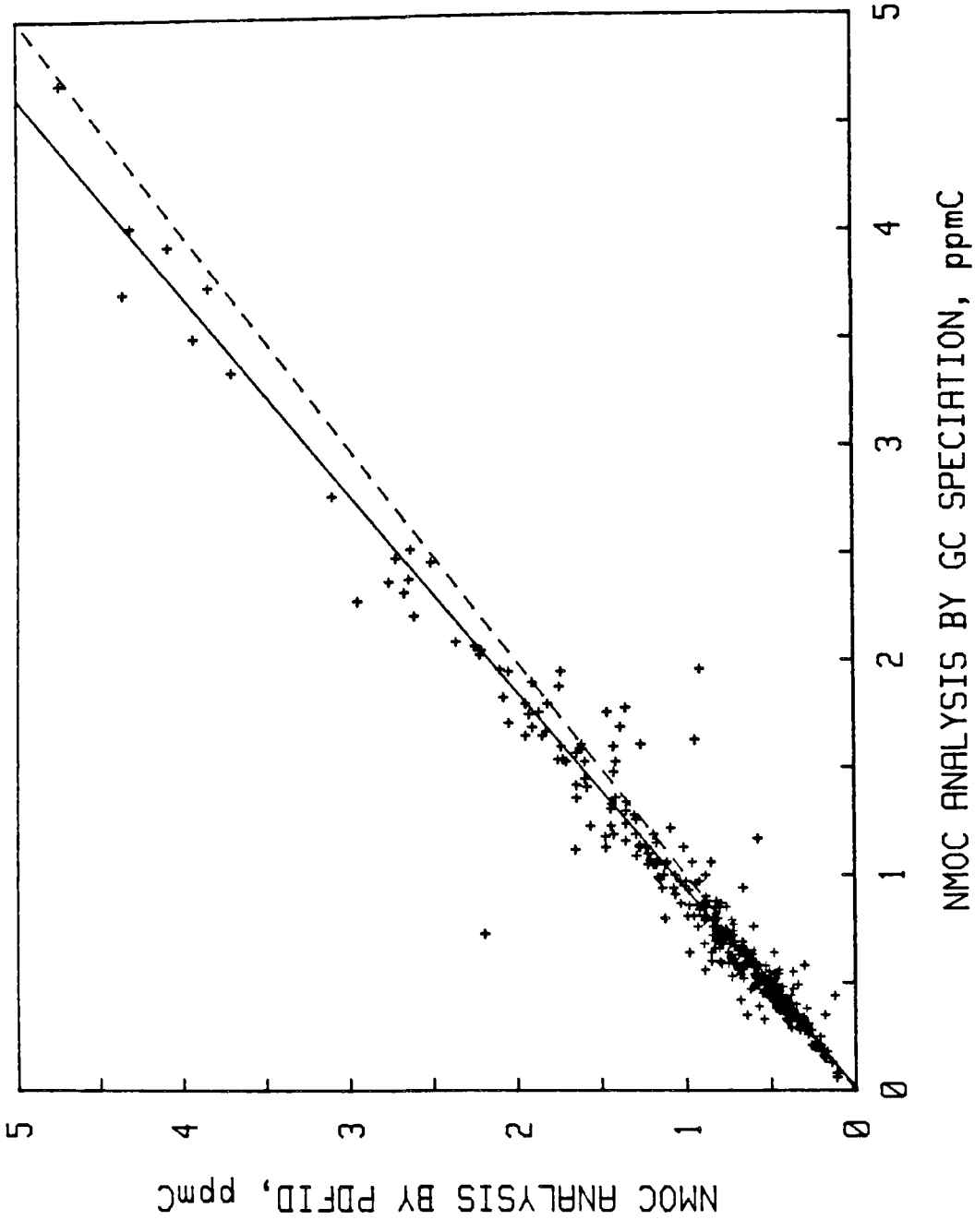

Figure 9. Comparison of PDFID Measurements to GC speciation measurements for 336 ambient samples.

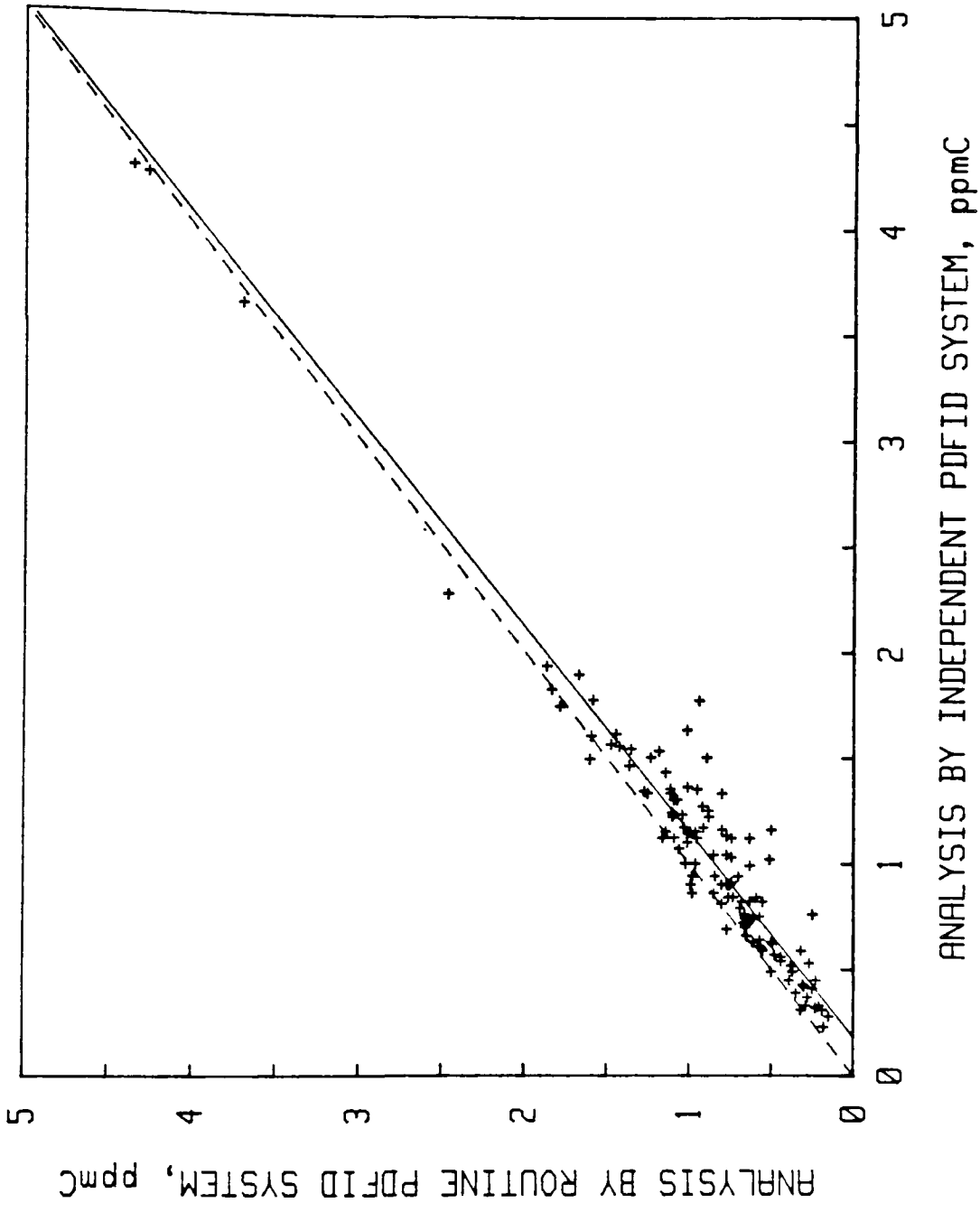

Figure 10. Comparison of NMOC measurements of 120 ambient samples by 2 independent PDFID analytical systems.

REFERENCES

1. U. S. Environmental Protection Agency, "Uses, Limitations, and Technical Basis of Procedures for Quantifying Relationships Between Photochemical Oxidants and Precursors." EPA-450/2-77-021a (Nov. 1977).

2. U. S. Environmental Protection Agency, "Guidance for Collection of Ambient Non-methane Organic Compound (NMOC) Data for Use in 1982 Ozone SIP Development." EPA-450/4-80-011 (June 1980).

3. H. B. Singh, "Guidance for the collection and use of ambient hydrocarbons species data in development of ozone control strategies." U. S. Environmental Protection Agency, EPA-450/480-008 (April 1980).

4. F. F. McElroy, V. L. Thompson, "Hydrocarbon Measurement Discrepancies Among Various Analyzers Using Flame-Ionization Detectors." EPA-600/4-75-010 (Sept. 1975).

5. J. W. Harrison, M. L. Timmons, R. B. Denyszyn, C. F. Decker, "Evaluation of the EPA Reference Method for the Measurement of Non-methane Hydrocarbons." U. S. Environmental Protection Agency, EPA-600/4-77-033 (June 1977).

6. F. W. Sexton, R. M. Michie, F. F. McElroy, V. L. Thompson, "A Comparative Evaluation of Seven Automated Ambient Non-methane Organic Compound Analyzers." U. S. Environmental Protection Agency, EPA-600/54-82-046 (August 1982).

7. H. G. Richter, "Analysis of Organic Compound Data Gathered during 1980 in Northeast Corridor Cities." U. S. Environmental Protection Agency, EPA-450/4-83-017 (August 1983).

8. Coordinating Research Council, CY65 Report Project No. CM-4-58, New York, NY (1966).

9. M. W. Jackson, "Analysis for Exhaust Gas Hydrocarbons--Nondispersive Infrared Versus Flame Ionization." JAPCA 11:697 (1966).

10. F. W. Secton, F. F. McElroy, "Technical Assistance Document for the Calibration and Operation of Automated Ambient Non-methane Organic Compound Analyzers." U. S. Environmental Protection Agency, EPA-600/4-81-015 (March 1981).

11. R. D. Cox, M. A. McDevitt, K. W. Lee, G. K. Tannahill, "Determination of Low Levels of Total Non-methane Hydrocarbon Content in Ambient Air." Environ. Sci. Technol. 16(1):57 (1982).

12. R. K. M. Jayanty, A. Blackard, F. F. McElroy, J. A. McBride, W. A. McClenny, "Determination of Non-methane Organic Carbon (NMOC) in Ambient Air by Cryogenic Preconcentration and Flame Ionization Detection," presented at the 75th Annual Meeting of APCA, New Orleans, LA (June 1982).

13. R. K. M. Jayanty, A. Blackard, F. F. McElroy, W. A. McClenny, "Laboratory Evaluation of Non-methane Organic Carbon Determination in Ambient Air by Cryogenic Preconcentration and Flame Ionization Detection." U. S. Environmental Protection Agency, EPA-600/54-82-019 (July 1982).

14. Battelle Columbus Laboratories. "Literature Survey of Cryogenic Sampling Techniques," Contract No. 68-02-3487.

15. H. G. Richter, F. F. McElroy, V. L. Thompson, "Measurement of Ambient NMOC Concentrations in 22 Cities During 1984," presented at 78th Annual Meeting of APCA, Detroit, MI (June 1985).

16. Radian Corporation, Final Project Report, "Nonmethane Organic Compounds Monitoring Assistance for Certain States in EPA Regions III, IV, V, VI, and VII. Phase II." EPA Contract No. 68-02-3513, DCN No. 85-203-024-12-01. February, 1985.

APPENDIX

CRYOGENIC PRECONCENTRATION AND DIRECT FLAME IONIZATION DETECTION (PDFID) METHOD

FOR MEASUREMENT OF ATMOSPHERIC CONCENTRATIONS OF NON-METHANE ORGANIC COMPOUNDS (NMOC)

August 1985

Quality Assurance Division
Environmental Monitoring Systems Laboratory
Office of Research and Development
U. S. ENVIRONMENTAL PROTECTION AGENCY
Research Triangle Park, North Carolina 27711

Preceding page blank

CONTENTS

	Page
INTRODUCTION	37
1. APPLICABILITY	40
2. PRINCIPLE	40
3. PRECISION AND ACCURACY	41
4. APPARATUS	42
4.1 Air Sampling	42
4.2 Sample Collection in Pressurized Canisters	42
4.3 Sample Canister Cleaning	43
4.4 Analytical System	44
4.5 Other Materials	46
5. SUPPLIES	46
5.1 Helium	46
5.2 Combustion Air	46
5.3 Hydrogen	46
5.4 Propane Calibration Standard	47
5.5 Zero Air	47
5.6 Cryogen	47
6. SYSTEM DESCRIPTION	47
6.1 Direct Sampling	47
6.2 Sample Collection in Pressurized Canisters	47
6.3 Analytical System	51

CONTENTS (continued)

Page

7. PROCEDURE 58

7.1 Recommended Procedure for Canister Cleaning 58

7.2 Procedure for Collection of Samples in Canisters . . . 59

7.3 Analysis Procedure 60

8. CALIBRATION 64

8.1 Calibration Frequency 64

8.2 Calibration Standards 64

8.3 Calibration Procedure 64

9. METHOD MODIFICATIONS 65

9.1 Sample Metering System 65

9.2 FID Detector System 65

9.3 Range 66

10. REFERENCES 67

FIGURES 68

APPENDIX 75

FIGURES

Figure		Page
1	Schematic of Analysis System Showing Three Sampling Modes	68
2	Sample System for Collection of Integrated Field Samples	69
3	Canister Cleaning System	70
4	Cryogenic Sample Trap Dimensions	71
5	Construction of Operational Baseline and Corresponding Correction of Peak Area	72
6	Suggested filter-hypodermic needle assembly for canister sampling system	73
7	Electrical pulse circuit for driving Skinner Magnelatch solenoid valves with a conventional mechanical timer	74

Mention of trade names or commercial products does not constitute endorsement or recommendation for use.

INTRODUCTION

A variety of photochemical dispersion models have been developed to describe the quantitative relationships between ambient concentrations of precursor organic compounds and subsequent downwind concentrations of ozone.[1] An important application of such models is to determine the degree of control of such organic compounds that is necessary in a particular area to achieve compliance with applicable ambient air quality standards for ozone.[1,2] For this purpose, the models require measurements of atmospheric concentrations of non-methane organic compounds (NMOC).

The more elaborate theoretical models generally require detailed organic species data.[2,3] Such species data must be obtained by multi-component gas chromatographic (GC) analysis of air samples.[2,3] Simpler empirical models such as the Empirical Kinetic Modeling Approach (EKMA) require only total NMOC concentration data, specifically the average total NMOC concentrations from 6 AM to 9 AM daily.[2]

For many EKMA applications, NMOC measurements are required at urban, center-city-type sites.[2] The NMOC concentrations typically found at such urban sites may range up to 5-7 ppmC* or higher. If transport of precursors into an area is to be considered, then NMOC measurements upwind of the area are necessary.[1] Upwind NMOC concentrations are likely to be very low, (less than a few tenths of 1 ppm). Continuous commercially available NMOC analyzers have been used to measure NMOC for EKMA applications, but the

*By convention, concentrations of NMOC are reported in units of parts per million carbon (ppmC), which for a specific compound is the concentration by volume (ppmV) multiplied by the number of carbon atoms in the compound.

measurements have generally been only marginally adequate for urban sites and unacceptable for upwind sites.[4,5] NMOC GC species measurements can be used by summing the various components to obtain a total NMOC concentration.[2] But for EKMA, the species data are not needed, and the cost and complexity of species analysis is very high.

The method described herein can be used to obtain both the requisite urban, as well as upwind, NMOC measurements.[6,7,8] This method is a simplification of the GC speciation method mentioned above. It combines the cryogenic concentration technique used in the GC method for high sensitivity with the simple flame ionization detector (FID) for total NMOC measurements, without the GC columns and complex procedures necessary for species separation. And because of the use of helium carrier gas, the FID has less response variation to various organic compounds than a conventional NMOC analyzer with air carrier or direct sample injection into the FID.[4,8]

This method can be used either for direct, in situ ambient measurements or for analysis of integrated samples contained in metal canisters. Making direct measurements at the monitoring site avoids the need for collection of air samples in canisters. However, the analyst must be present during the 6 AM to 9 AM period, and repeated measurements (approximately six per hour) must be taken to obtain the 6 AM to 9 AM average NMOC concentration. A separate analytical system and analyst is needed for each monitoring site. (Further development of the method may eventually allow for automatic operation, for on-line semi-continuous analysis in the future.)

The use of sample canisters allows the collection of integrated air samples over the 6 AM to 9 AM period by automated samplers at unattended

monitoring sites. One analytical system can then be used to analyze the samples from several monitoring sites. Degradation or contamination of the air samples by the canister or sample collection system could be a potential problem. However, tests indicate that the use of properly cleaned stainless steel canisters, as described in the procedure, is practical and adds relatively little additional variability to the method.[8] Although storage of the air samples for several weeks in the stainless steel canisters appears to result in no appreciable degradation of the sample,[8] good practice would suggest that the samples be analyzed as soon after collection as practical.

CRYOGENIC PRECONCENTRATION AND DIRECT FLAME IONIZATION DETECTION (PDFID) METHOD FOR MEASUREMENT OF ATMOSPHERIC CONCENTRATIONS OF NON-METHANE ORGANIC COMPOUNDS (NMOC)

1. APPLICABILITY

This method is applicable to measurement of concentrations of total gaseous non-methane organic compounds (NMOC) in the atmosphere for use with atmospheric photochemical models such as EKMA[1] or for other appropriate applications. Measurements may be obtained either in situ, or by subsequent analysis of integrated air samples collected over a fixed time period, such as the 3-hour (6 AM to 9 AM) measurements specified for EKMA. Collection of integrated samples also allows for central analysis of samples from multiple sites. The high sensitivity and low detection limit of the method make it suitable for upwind measurements, while the wide dynamic range allows analysis of urban air samples as well.

2. PRINCIPLE

An air sample is taken either directly from the ambient air at the monitoring site, where the analytical system is located, or from a special sample canister filled previously at a remote sampling site. A fixed-volume portion of the sample is drawn at a low flow rate through a glass beaded trap that is cryogenically cooled to approximately -186° C (liquid argon temperature). At this temperature, all organic compounds in the sample other than methane are collected (either via condensation or adsorption) in the trap, while methane, nitrogen, oxygen, etc., pass through. The system is dynamically calibrated so that the volume of sample passing through the trap does not have to be quantitatively measured, but must be precisely repeatable between the calibration and analytical phases.

After the fixed volume air sample has been drawn through the trap, a helium carrier gas flow is diverted to pass through the trap, in the opposite direction to the previous sample flow, and into a flame ionization detector (FID). When the residual air and methane have been cleared from the trap and the FID baseline becomes steady, the cryogen is removed and the temperature of the trap is raised to approximately 90° C. The organic compounds previously collected in the trap revolatilize and are carried into the FID, resulting in a response peak or peaks from the FID. The area of the peak or peaks is integrated, and the integrated value is translated to concentration units via a previously obtained calibration curve relating integrated peak areas with known concentrations of propane.

The cryogenically cooled trap simultaneously concentrates the non-methane organic compounds while separating and removing the methane from air samples. Thus the technique is direct reading for NMOC and, because of the concentration step, is more sentitive than conventional NMOC analyzers. Also, operation of the FID detector with a helium carrier results in less response variation to different organic compounds[6,8] than is observed with conventional NMOC analyzers having air carriers or direct air injection.[4] Quantitative trapping has been shown for most compounds tested.[6,8]

3. PRECISION AND ACCURACY

The analytical precision, assessed in an actual field monitoring project, was estimated to be 12.7%.[8] The overall precision estimate for the method, including the effect of collecting and storing the ambient samples in stainless steel canisters, was found to be about 0.12 ppmC (approximately 17.4%).[8] Because of the number and variety of organic compounds included in

the NMOC measurement, determination of absolute accuracy is not practical. Based on comparison with manual GC speciation analysis--a technique regarded as the best available for the measurement of atmospheric organic compounds--the proportional (per cent) bias was determined to be +8.1%, with a negligible fixed bias (intercept).[8] Although the 8.1% bias was statistically significant, no correction factor is proposed for the method because this bias is modest, and the speciation technique is not an absolute standard.

Experimental tests indicate some degree of FID baseline shift from water vapor in ambient samples, which could result in positive bias, variability, or both. These problems can be adequately minimized by careful selection of the integration termination point and appropriate baseline corrections, as described in Section 7.3.

4. APPARATUS

The following components and materials are required or recommended. Sources for the more specialized components are given in the Appendix. An overall schematic diagram of the analytical system is shown in Figure 1, and a suggested system for collecting ambient samples in canisters is shown in Figure 2. A canister cleaning system is shown in Figure 3.

4.1 Air Sampling

4.1.1 Sample manifold or sample inlet line, to bring sample air into the sampling or analytical system.

4.1.2 Vacuum pump or blower, if needed, to draw sample air through a sample manifold or long inlet line to reduce inlet residence time.

4.2 Sample Collection in Pressurized Canisters (See Figure 2)

4.2.1 Sample canisters. Stainless steel pressure vessels of 4 to 6 L

volume, with one or two leak-free shut-off valves (see Appendix). Interior surfaces of the canisters should be passivated using the SUMMA process (Molectrics, Carson, CA). Each canister should have a unique identification number.

4.2.2 Sample pump. Stainless steel, metal bellows type (Metal Bellows model MB-151 or equivalent) capable of 2 atmospheres (200 kPa, 30 psig) minimum output pressure. Pump must be free of leaks, clean, and uncontaminated by oil or organic compounds.

4.2.3 Pressure gauge. 0-200 kPa (0 - 30 psig).

4.2.4 Shut-off valve, for gauge.

4.2.5 Stainless steel orifice or short capillary, capable of maintaining a substantially constant flow over the sampling period (see Section 6.2).

4.2.6 Particulate matter filter. (2 micron stainless steel sintered in-line type)

4.2.7 Timer (for unattended sample collection). Capable of controlling pump(s) and solenoid valve (see Section 6.2).

4.2.8 Solenoid valve. Normally closed, bubbletight, electrically-operated valve. A special bi-stable solenoid valve that requires energizing only briefly for turn-on and turn-off (Skinner Magnalatch or equivalent) is recommended to minimize temperature rise in the valve (see Section 6.2).

4.2.9 Needle valve. Optional fine metering valve may be needed to adjust flow rate of sample from canister during analysis.

4.3 Sample Canister Cleaning (See Figure 3)

4.3.1 Vacuum pump. Capable of evacuating the sample canisters to an absolute pressure of <5 mm Hg.

4.3.2 Vacuum manifold. A metal manifold with connections for several canisters to be simultaneously cleaned.

4.3.3 Shut-off valves (3), as shown.

4.3.4 Vacuum gauge. Capable of measuring the vacuum in the vacuum manifold to an absolute pressure of 5 mm Hg or less.

4.3.5 Cryogenically cooled trap. U-shaped open tubular trap cooled with liquid nitrogen or argon, to prevent contamination from back diffusion of oil from the vacuum pump.

4.3.6 Pressure gauge. 0 - 50 psig (0-345 kPa), to monitor canister pressure.

4.3.7 Flow control valve, to regulate flow of zero air into canisters.

4.4 Analytical System (See Figure 1)

4.4.1 FID detector system, including flow controls for the FID fuel and air, temperature control for the FID, and signal processing electronics.

4.4.2 Chart recorder, compatible with the FID output signal, to record FID response signals for visual interpretation.

4.4.3 Integrator, electronic, compatible with the FID output signal and capable of integrating the area of one or more FID response peaks and calculating peak area corrected for baseline drift (see Section 6.3.10).

NOTE: Items 4.4.1, 4.4.2, and 4.4.3 are conveniently provided by a current model laboratory chromatograph (such as the Hewlett-Packard model 5880 or similar). See also Sec-

tions 6.3.7 and 6.3.10. A chromatograph may also provide other convenient features such as an oven for warming the trap and valve, automatic control of the valve and integrator, pressure or flow regulators, etc. (see below).

4.4.4 Six-port chromatographic valve. Seiscor model VIII (pneumatic), Valco 9110 (manual), or equivalent.

4.4.5 Trap (See Figure 4). Fabricated from 0.3175 cm (1/8") o.d., 0.21 cm i.d. chromatographic grade stainless steel tubing to the approximate dimensions shown. A 7 to 10 cm section in the center of the trap is packed with 60/80 mesh glass beads, held in place with dimethyldichlorosilane-treated glass wool at both ends.

4.4.6 Cylinder pressure regulators. Standard, two-stage cylinder pressure regulator, with pressure gauges, for helium, air and hydrogen cylinders.

4.4.7 Low pressure regulators. Single stage, with pressure gauge, if needed, to maintain constant helium carrier gas and hydrogen flow rates (see Section 6.3.5).

4.4.8 Needle valve. Fine metering valve to adjust sample flow rate through trap.

4.4.9 Cryogenic Dewar, to hold liquid cryogen sized to contain submerged portion of trap.

4.4.10 Absolute pressure gauge. 0 - 400 mm Hg, Wallace & Tiernan model 61C-ID-0410, or equivalent (see Section 6.3.1).

4.4.11 Vacuum reservoir. Vacuum tank of about 1 to 2 L capacity (see Section 6.3.1).

4.4.12 Gas purifiers. Gas scrubbers containing Drierite or silica

gel and 5A molecular sieve to remove moisture and organic impurities in the helium carrier gas, air, and hydrogen.

4.4.13 Shut-off valves (2). Leak free, for vacuum valve and sample valve.

4.4.14 Vacuum pump. General purpose laboratory pump capable of evacuating the vacuum reservoir to an appropriate vacuum that allows the desired sample volume to be drawn through the trap.

4.4.15 Trap heating system. Chromatograph oven, hot water, or other means to heat the trap to 80° to 90° C.

4.4.16 Vent, to keep the trap at atmospheric pressure during trapping when using pressurized canisters, with means to detect and verify positive vent flow, such as a rotameter or bubbler (see Section 6.2).

4.5 Other Materials

4.5.1 Various connecting tubing and plumbing fittings. All such items in contact with the sample, analyte, or support gases prior to analysis should be stainless steel or other inert metal. Do not use plastic or Teflon tubing or fittings.

4.5.2 Various mechanical mounting fixtures, as necessary.

5. SUPPLIES

5.1 Helium. Cylinder of high purity grade helium.

5.2 Combustion air. Cylinder of air containing less than 0.5 ppm hydrocarbons, or equivalent air source.

5.3 Hydrogen. Cylinder of ultra high purity grade hydrogen, or equivalent hydrogen source.

5.4 Propane calibration standard. Cylinder containing 1 to 100 ppm (3 to 300 ppmC) propane in air. The cylinder assay should be traceable to a National Bureau of Standards (NBS) propane in air Standard Reference Material (SRM) or to a commercially available Certified Reference Material (CRM).

5.5 Zero air, containing less than 0.01 ppmC hydrocarbons. Zero air may be obtained from a cylinder of zero-grade compressed air scrubbed with Drierite or silica gel and 5A molecular sieve or activated charcoal, or by catalytic cleanup of ambient air. All zero air should be passed through a cryogenic cold trap for final cleanup.

5.6 Cryogen. Liquid argon or liquid oxygen. (Observe appropriate safety precautions with liquid oxygen.)

6. SYSTEM DESCRIPTION

6.1 Direct Sampling

For direct ambient sampling, the cryogenic trapping system draws the air sample directly from a pump-ventilated distribution manifold or sample line. The connecting line should be of small diameter (1/8" o.d.) stainless steel and as short as possible to minimize its dead volume. With direct sampling, multiple analyses will have to be taken over the sampling period to establish hourly or 3-hour NMOC concentration averages.

6.2 Sample Collection in Pressurized Canisters

Collection of ambient air samples in pressurized canisters provides a number of advantages, including (1) convenient integration of ambient

samples over a specific time period, e.g., 1 or 3 hours; (2) remote sampling and central analysis; (3) storage and shipping of samples, if necessary; (4) unattended sample collection; (5) analysis of samples from multiple sites with one analytical system; and (6) collection of replicate samples for assessment of measurement precision. However, great care must be exercised in selecting, cleaning, and handling the sample canisters and sampling apparatus to avoid losses or contamination of the samples.

Figure 2 shows a schematic diagram of a recommended sample collection system. The small auxiliary vacuum pump purges the inlet manifold or lines with a flow of several liters/minute to minimize the sample residence time. The larger, metal bellows pump takes a small portion of this sample to fill and pressurize the sample canister. Both pumps should be shock-mounted to minimize vibration.

A critical orifice or hypodermic needle connected to the inlet of the metal bellows pump is used to maintain a substantially constant flow into the canister(s) over the sample period and must be selected to provide the desired flow rate. This flow rate is chosen so that the canisters are pressurized to at least one atmosphere above ambient pressure (2 atmospheres absolute pressure) over the desired sample period. The flow rate can be calculated by

$$F = \frac{P\ V\ N}{T \times 60} \qquad (1)$$

where

F = Flow rate, cm^3/min,

P = Final canister pressure, atmospheres absolute*,

V = Volume of the canister, cm^3,

N = Number of canisters connected together for simultaneous sample collection,

T = Sample period, hours.

For example, if one 6 L canister is to be filled to 2 atmospheres absolute pressure (15 psig) in 3 hours,

$$F = \frac{2 \times 6000 \times 1}{3 \times 60} = 67 \ cm^3/min$$

A 30 gauge hypodermic needle 2.5 cm long provides a flow of approximately 65 cm^3/min with the Metal Bellows Model MB-151 pump. Such a needle will maintain approximately constant flow up to a canister pressure of about 10 psig, after which the flow drops with increasing pressure. At 15 psig (2 atmospheres absolute pressure), the flow is about 10% below the original flow.

The hypodermic needle is protected with a 2.0 μm stainless steel in-line particulate filter, which also keeps particulate matter from depositing in the pump, lines, and canister. A suggested filter-hypodermic needle assembly can be fabricated as shown in Figure 6.

For automatic operation, the timer is wired to start and stop the pump or pumps at the appropriate times for the intended sample period.

*Absolute pressure in atmospheres = $P_g/P_a + 1$, where Pg = gauge pressure in the canister, psig, and Pa = standard atmospheric pressure (14.7 psi).

The timer must also control the solenoid valve. The Skinner Magnelatch solenoid valve specified avoids the substantial temperature rise that would occur with a conventional normally closed solenoid valve, which would have to be energized during the entire sample period. This temperature rise in the valve could cause outgasing of organics from the Viton valve seat material. The Magnelatch valve, however, requires only brief electrical pulses to open and close at the appropriate start and stop times and therefore experiences no temperature increase. The pulses may be obtained with an electronic timer that can be programmed for short (5 to 60 seconds) ON periods or with a conventional mechanical timer and a pulse circuit such as the one shown in Figure 7.

The canisters are originally evacuated. The connecting lines between the sample pump and the canister(s) should be as short as possible to minimize their volume. Check to see that the flow rate into the canister remains relatively constant over the entire sampling period. (As previously noted, some drop in the flow rate may occur near the end of the sample period as the canister pressure approaches two atmospheres absolute pressure.)

Simultaneous collection of duplicate samples decreases the possibility of lost measurement data from samples lost due to leakage or contamination in either of the canisters. Two (or more) canisters can be filled simultaneously by connecting them in parallel (see Figure 2) and selecting an appropriate flow rate to accommodate the number of canisters (Equation 1). Duplicate (or replicate) samples also allow assessment of measurement precision based on the differences between

duplicate samples (or the standard deviation among replicate samples).

Prior to field use, each sampling system should be tested for pump contamination (see Section 7.2), leaks, and proper flow rate. The plumbing on the outlet side of the metal bellows pump can be checked for leaks by shutting off the canister valves, pressurizing the system, and checking fittings, etc. with a nonhydrocarbon-based leak detector fluid. The metal bellows pump should also be leak-checked by plugging its outlet and ensuring that there is no flow into its inlet side. The canisters must be cleaned and checked for contamination before use (see Section 7.1).

During analysis, a pressurized canister containing an air sample is connected to the six-port valve with a vent, as shown in Figure 1. The canister valve or an optional flow control valve installed between the canister and the vent is used to reduce the canister pressure and adjust the canister flow rate to a value slightly higher than the trap flow rate set by sample metering valve. The excess flow exhausts through the vent, which assures that the sample air flowing through the trap is at atmospheric pressure. The vent is connected to a flow indicator such as a rotameter or is submerged in water so that the escaping bubbles provide a visual indication of vent flow to assist in adjusting flow control valve.

6.3 Analytical System

6.3.1 Sample volume metering system. The vacuum reservoir and pressure gauge (see Figure 1) are used to meter precisely repeatable volmes of sample air through the cryogenically

cooled trap. With the sample valve closed and the vacuum valve open, the reservoir is first evacuated with the vacuum pump to a predetermined pressure (e.g. 80 mm Hg). Then the vacuum valve is closed and the sample valve is opened to allow sample air to be drawn through the cryogenic trap and into the evacuated reservoir until a second predetermined reservoir pressure is reached (e.g. 180 mm Hg). The (fixed) volume of air thus sampled is determined by the pressure rise in the vacuum reservoir (difference between the predetermined pressures) as measured by the absolute pressure gauge. This volume can be calculated by

$$V_s = \frac{\Delta P \; V_r}{P_s} \qquad (2)$$

where

V_s = Volume of air sampled, standard cm^3,

ΔP = Pressure difference measured by gauge, mm Hg,

V_r = Volume of vacuum reservoir,

P_s = Standard pressure (760 mm Hg).

For example, with a vacuum reservoir of 1700 cm^3 and a pressure change of 100 mm Hg (80 to 180 mm Hg), the volume sampled would be 225 cm^3.

The sensitivity of the method is proportional to the sample volume. However, sample volumes over about 500 cm^3 may lead to loss of sample flow during trapping due to clogging of the trap from ice. Sample volumes below about 100 - 150 cm^3 may cause increased measurement variability due to dead volume in lines and valves. For most typical ambient NMOC concentrations, sample volumes in the range of 200 - 500 cm^3 appear to be

appropriate. If a response peak obtained with a 500 cm^3 sample turns out to be off-scale or to exceed the calibration range, a second analysis can be carried out with a smaller volume. The actual sample volume used need not be accurately known if it is precisely repeatable during both calibration and analysis.

Similarly, the actual volume of the vacuum reservoir need not be accurately known. But the reservoir volume should be matched to the pressure range and resolution of the absolute pressure gauge so that the measurement of the pressure change in the reservoir--and hence the sample volume--is repeatable within 1%. A 1700 cm^3 vacuum reservoir and pressure change of 20 to 200 mm Hg, measured with the specified pressure gauge, has proven adequate. A smaller volume reservoir may be used with a greater pressure change to accommodate absolute pressure gauges with lower resolution, and vice versa.

6.3.2 Trap. The trap should be carefully constructed from a single piece of tubing in the shape shown in Figure 4. The central portion of the trap (7 to 10 cm) is packed with 60/80 mesh glass beads with small glass wool plugs to retain the beads. The trap must fit conveniently into the Dewar flask (Section 4.4.9), and the arms must be of an appropriate length to allow the beaded portion of the trap to be submerged below the level of liquid cryogen in the Dewar. The trap should connect directly to the six-port valve, if possible, to minimize line length between the trap and the FID. It must be mounted to allow the Dewar to be conveniently slipped on and off the trap and also to facilitate heating of the trap (see Section 6.3.4).

6.3.3 Liquid cryogen. Either liquid oxygen (bp -183.0° C) or liquid argon (bp -185.7° C) may be used as the cryogen; experiments have shown no difference in trapping efficiency between the two cryogenic liquids.[6] However, appropriate safety precautions must be taken if liquid oxygen is used. Liquid nitrogen (bp -195° C) should not be used as it causes condensation of oxygen and methane in the trap. It may be possible to use liquid nitrogen in an automated system if an automatic temperature controller is used to obtain an operational temperature in the range of -180° to -185° C. The level of the cryogenic liquid should be maintained constant with respect to the trap (see Section 7.3.11) and should completely cover the beaded portion of the trap.

6.3.4 Heat source. To facilitate integration of the NMOC response peak, a hot bath or other heating source is used to heat the trap and volatilize the concentrated NMOC such that the FID produces one (or only a few) sharp and easily integrated peak (or peaks). The trap should be heated to a temperature in the range of 80° to 90° C. A simple heating source for the trap is a beaker or Dewar filled with water maintained at 80° to 90° C. Other types of heat sources include a temperature-programmed chromatograph oven, electrical heating of the trap itself, or any type heater that brings the temperature of the trap up to 80° to 90° C in 1 to 2 minutes. A uniform trap temperature rise rate (above 0° C) may help to reduce variability and facilitate more accurate correction for the moisture-shifted baseline (see Section 6.3.10). If a programmable chromatograph oven is used to heat the trap, the following parameters have been found

to be acceptable: initial temperature, 30° C; initial time, 0.20 minutes (following start of the integrator); heat rate, 30°/min.; final temperature, 90° C.

6.3.5 Carrier gas. Helium is used to purge residual air and methane from the trap at the conclusion of the sampling phase and to carry the revolatilized NMOC from the trap into the FID. A single-stage auxiliary regulator between the cylinder and the analyzer may not be necessary but is recommended to regulate helium pressure better than the two-stage cylinder regulator. When an auxiliary regulator is used, the secondary stage of the two-stage regulator must be set at a pressure higher than the pressure setting of the single-stage regulator.

6.3.6 Construction. The six-port valve and as much of the interconnecting tubing as practical should be located inside an oven or otherwise heated to 80° to 90° C to minimize wall losses or adsorption/desorption in the connecting lines. All lines should be kept as short as practical.

All tubing used for the system should be chromatographic grade stainless steel connected with stainless steel fittings. Pneumatic damping may be needed between the six-port valve and the FID to dampen the effect of valve actuations, which may otherwise cause upsets in the FID signal or extinguish the flame. A stainless steel capillary may be used for damping, but its length should be as short as possible to prevent broadening of the peak.

After assembly, the system should be pressurized to about 80 psig (550 kPa) and checked for leaks. During this procedure,

disconnect the absolute pressure gauge and cap the line to prevent damage to the gauge. If the system is leak free, depressurize the system and reconnect the gauge.

6.3.7 FID Detector. The FID burner air, hydrogen, and carrier helium flow rates should be set according to the manufacturer's instructions to obtain an adequate FID response while maintaining as stable a flame as possible throughout all phases of the analytical cycle. Typical flow rates are as follows: hydrogen, 30 cm^3/min; carrier (He), 30 cm^3/min; burner air, 400 cm^3/min.

6.3.8 Linearity. Response has been shown to be linear over a wide range (0 to 10,000 ppb C).[6]

6.3.9 Range. Some FID detector systems such as those associated with laboratory chromatographs may have autoranging. Others may provide a "range" (attenuator) control and internal full-scale output voltage selectors. An appropriate combination should be chosen so that an adequate output level for accurate integration is obtained down to the detection limit, yet the electrometer or integrator must not be driven into saturation at the upper end of the calibration. Saturation of the electrometer may be indicated by flattening of the calibration curve at high concentrations. Additional adjustment of range and sensitivity can be provided by adjusting the sample volume used, as discussed in Section 6.3.1.

6.3.10 Integrator. The integrator must be electrically compatible with the output signal of the FID detector so that sufficient resolution is available at low concentrations without over-ranging on high concentrations. If both an integrator and a separate chart recorder are used, care must be exercised to be sure that these components do not interfere with each other electrically. Range selector controls on both the integrator and the FID analyzer may not provide accurate range ratios, so individual calibration curves should be prepared for each range to be used.

The integrator should be capable of marking the beginning and ending of peaks, constructing the appropriate baseline between the start and end of the integration period, and calculating the peak area accordingly (see Figure 5). This capability is necessary because the moisture in the sample, which is also concentrated in the trap, will cause a slight positive baseline shift. This baseline shift starts as the trap warms and continues until all of the moisture is swept from the trap, at which time the baseline returns to its normal level. The shift generally continues longer than the ambient organic peaks. If possible, the integrator should be programmed to correct for this shifted baseline. Alternatively, analyses of humidified zero air should be used as blanks to correct the ambient air concentration measurements accordingly.

7. PROCEDURE

7.1 Recommended Procedure for Canister Cleaning

7.1.1 Leak-test all canisters by pressurizing them to about 40 psig (275 kPa) with zero air and immersing them in water. Defective canisters should be returned to the manufacturer for repair.

7.1.2 Connect canisters to the vacuum manifold as shown in Figure 3.

7.1.3 Open the vacuum shut-off valve and evacuate the canisters to 5.0 mm Hg or less for one hour or more, using a cryogenically-cooled trap in the vacuum line to eliminate back diffusion of hydrocarbons and oil from the vacuum pump.

7.1.4 Close the vacuum and vacuum gauge shut-off valves. Open the zero air valve to pressurize the canisters with zero air to about 35 psig (240 kPa). If a zero gas generation system is used, the rate of flow may need to be limited to maintain the zero air quality.

7.1.5 Close the zero air valve and allow the canisters to vent down to atmospheric pressure through the vent valve. Then close the vent valve.

7.1.6 Repeat steps 7.1.3 to 7.1.5 two additional times.

7.1.7 Fill the canisters with zero air and analyze the contents as a blank check of the canisters and of the cleanup system and procedure. This step should be performed on 100% of the canisters until the cleanup system and procedure are proven to be reliable. The check can then be reduced to a lower percentage unless problems arise. Any canister that does not test clean (compared to direct analysis of zero air) after repeated cleaning should not be used.

7.1.8 Re-evacuate the canister after the analysis and leave it evacuated until used.

7.1.9 Attach a paper tag to each canister for field notes. The canister is now ready for collection of an air sample.

7.2 Procedure for Collection of Samples in Canisters

7.2.1 Clean and test the canisters according to the procedure in Section 7.1.

7.2.2 Assemble a sample collection system such as the one shown in Figure 2.

7.2.3 Check the pump for contamination by filling two evacuated, cleaned canisters with zero air through the sampling system and analyzing them.

7.2.4 Check the flow control orifice on each sampling system to make sure the sample flow remains relatively constant up to about 15 psig (2 atmospheres absolute pressure).

7.2.5 Install the pump at the site. If the inlet line is long (over about 3 meters), use an auxiliary pump as shown in Figure 2 to ventilate the line.

7.2.6 Verify that the timer, pump(s), and solenoid valve are connected and operate properly.

7.2.7 Verify that the timer is correctly set for the desired sample period, and that the solenoid valve is closed. Connect the evacuated canister(s) to the solenoid valve.

7.2.8 Open the canister valve. A small rotameter temporarily connected to the sample inlet can be used to verify that there is no flow. (Flow detection would indicate a leaking solenoid valve.)

7.2.9 After the sample period, close the canister valve, disconnect the canister from the sampling system and connect a pressure gauge to the canister. Briefly open and close the canister valve, and note the canister pressure. If the canister pressure is not approximately 2 atmospheres absolute (15 psig), determine and correct the cause of the low or high sample pressure before the next sample.

7.2.10 Fill out the identification tag on the sample canisters as necessary. Take the canisters to the analytical system for analysis.

7.2.11 Complete records of the sampling should be entered in a laboratory notebook. The sampling operator should be alerted to take note of any activities or special conditions in the area (rain, smoke, etc.) that may affect the sample contents.

7.3 Analysis Procedure

7.3.1 Assemble the analytical system as shown in Figure 1 and as discussed in Section 6. Allow the FID detector to warm up and stabilize for several hours before analysis.

7.3.2 Check and adjust the helium carrier pressure to provide the correct carrier flow rate for the system (see Section 6.3.7). Also check FID hydrogen and burner air flow rates.

7.3.3 Close the sample valve and open the vacuum valve to evacuate the vacuum reservoir.

7.3.4 With the trap at room temperature, place the six-port valve in the inject position.

7.3.5 Open the sample valve and adjust the sample metering valve for an approximate sample flow of 50 - 100 cm^3/min. (The flow will be lower later, when the trap is cold.)

7.3.6 Connect a sample canister or direct sample inlet to the six-port valve as shown in Figure 1. For a canister, open the canister valve and adjust the canister valve and/or the sample metering valve to obtain a moderate vent flow as indicated by the flow indicator or by constant bubbles. Then close the sample valve.

CAUTION: Do not allow water to be drawn into the six-port valve. The sample flow will be lower (and hence the vent flow will be higher) when the trap is cold.

7.3.7 Open the vacuum valve (if not already open) to evacuate the vacuum reservoir. With the six-port valve in the inject position and the vacuum valve open, open the sample valve for a few minutes to flush and condition the inlet lines.

7.3.8 Close the vacuum valve and allow the reservoir pressure to rise to the predetermined sample starting pressure on the absolute pressure gauge (see Section 6.3.1). Then quickly close the sample valve at the starting pressure reading.

7.3.9 Switch the six-port valve to the sample position.

7.3.10 Submerge the trap in the cryogen and allow a few minutes for the trap to cool completely (indicated when the cryogen stops boiling). Check and adjust the initial cryogen level to the same level used during calibration (Section 8).

7.3.11 Open the sample valve and observe the increasing pressure on the pressure gauge. When it reaches the pressure representative of the desired sample volume (see Section 6.3.1), close the sample valve.

7.3.12 Add a little cryogen or elevate the Dewar to raise the liquid level to a point slightly (1 to 5 mm) higher than the initial level at the beginning of the trapping (see Section 7.3.8). Then switch the 6-port valve to the inject position, keeping the cryogenic liquid on the trap. Also close the canister valve to conserve the remaining sample in the canister.

7.3.13 Start the chart recorder and wait until the FID response baseline has stabilized (about 20 to 60 seconds). Do not wait longer than one minute.

7.3.14 Start the integrator. Remove the liquid cryogenic bath from the trap and smoothly but not too quickly replace it with a Dewar of hot water (approximately 80° to 90° C) or, if the trap is in an oven, start heating the oven. Use the same temperature and level of hot water or a consistent heating sequence for both calibration and sample analyses. Heating the trap too quickly may cause an initial negative-going response which could hamper accurate integration. Some initial experimentation may be necessary to determine the optional heating procedure for each system, but once established, the procedure should be consistent for each analysis.

7.3.15 Continue the integration only long enough to include all of the organic compound peaks and to establish the end point FID baseline, as shown in Figure 5 (probably 1 to 2 minutes, depending on rate of trap heating). The end point baseline will be shifted somewhat higher than the initial baseline due to moisture in the sample. Construct an operational baseline from the initial baseline at the beginning of the first peak to the end point baseline as shown in Figure 5, and correct the peak area reading according to this operational baseline. Electronic integrators either do this automatically or they should be programmed to do this correction.

NOTE: Be sure that the 6-port valve remains in the inject position until all moisture has purged from the trap (3 minutes or longer).

7.3.16 Use the calibration curve (Section 8.3) to convert the integrated peak area reading into concentration units (ppmC). Note that the NMOC peak shape may not be precisely reproducible due to variations in heating the trap, but the total NMOC peak area should be reproducible.

7.3.17 Duplicate Analysis - Analyze each canister sample at least two times and report the average NMOC concentration. Problems occasionally occur during an analysis that will cause improper or inconsistent results. If the first two analyses do not agree closely, additional analyses should be made to identify inaccurate measurements and produce a more accurate average.

8. CALIBRATION

8.1 Calibration Frequency

Initially, a complete dynamic calibration at five or more concentrations should be carried out on each range to define the calibration curve. Subsequently, the calibration should be verified with two- or three-point calibration checks (including zero) each time the analytical system is used to analyze samples.

8.2 Calibration Standards

Propane calibration standards may be obtained directly from low concentration cylinder standards or by dilution of high concentration cylinder standards with zero air. Dilution flow rates must be measured accurately, and the combined gas stream must be mixed thoroughly. Calibration standards should be sampled directly from a vented manifold or tee. Remember that a propane NMOC concentration in ppmC is three times the volumetric concentration in ppm.

8.3 Calibration Procedure

8.3.1 Select one or more combinations of FID attenuator setting, output voltage setting, integrator resolution (if applicable), and sample volume to provide the desired range or ranges (e.g., 0 to 1.0 ppmC or 0 to 5.0 ppmC). Each such range should be calibrated individually and have a separate calibration curve. (Modern GC integrators may provide automatic ranging such that several decades of concentration may be covered in a single range.)

8.3.2 Analyze each calibration standard three times according to the procedure in Section 7.3. Be sure that flow rates, pressure gauge start and stop readings, initial cryogen liquid level in

the Dewar, timing, heating and other variables are the same as will be used during analysis of ambient samples.

8.3.3 Average the three analyses for each concentration standard and plot the calibration curve(s) as integrated peak area reading versus concentration in ppmC. The relative standard deviation for the three analyses should be less than 3% (except for zero concentration). Linearity should be expected; points that appear to deviate abnormally should be repeated. If non-linearity is observed, an effort should be made to identify and correct the problem. If the problem cannot be corrected, additional points in the non-linear region may be needed to adequately define the calibration curve.

9. METHOD MODIFICATIONS

9.1 Sample Metering System

Although the vacuum reservoir and absolute pressure gauge technique for metering the sample volume during analysis is efficient and convenient, other techniques should work also. For example, a constant sample flow could be established with a vacuum pump and a critical orifice, with the six-port valve being switched to the sample position for a measured time period. Or a gas volume meter such as a wet test meter could be used to measure the total volume of sample air drawn through the trap. However, these alternate techniques have not been tested or evaluated.

9.2 FID Detector System

FID detector systems other than the Hewlett-Packard Model 5840A may

also be adaptable to the method. The specific flow rates and necessary modifications for the helium carrier for any alternate FID instrument would have to be worked out by the user.

9.3 Range

It may be possible to increase the sensitivity of the method by increasing the sample volume. However, limitations are likely to arise, such as plugging of the trap by ice; hence, any attempt to increase the sensitivity should be tested carefully.

10. REFERENCES

1. U. S. Environmental Protection Agency, "Uses, Limitations, and Technical Basis of Procedures for Quantifying Relationships Between Photochemical Oxidants and Precursors." EPA-450/2-77-021a (Nov. 1977).

2. U. S. Environmental Protection Agency, "Guidance for Collection of Ambient Non-methane organic Compound (NMOC) Data for Use in 1982 Ozone SIP Development." EPA-450-/4-80-011 (June 1980).

3. H. B. Singh, "Guidance for the collection and use of ambient hydrocarbons species data in development of ozone control strategies." U. S. Environmental Protection Agency, EPA-450/480-008 (April 1980).

4. F. W. Sexton, R. M. Michie, F. F. McElroy, V. L. Thompson, "A Comparative Evaluation of Seven Automated Ambient Non-methane Organic Compound Analyzers." U. S. Environmental Protection Agency, EPA-600/54-82-046 (August 1982).

5. H. G. Richter, "Analysis of Organic Compound Data Gathered During 1980 in Northeast Corridor Cities." U. S. Environmental Protection Agency, EPA-450/4-83-017 (August 1983).

6. R. K. M. Jayanty, A. Blackard, F. F. McElroy, W. A. McClenny, "Laboratory Evaluation of Non-methane Organic Carbon Determination in Ambient Air by Cryogenic Preconcentration and Flame Ionization Detection." U. S. Environmental Protection Agency, EPA-600/54-82-019 (July 1982).

7. R. D. Cox, M. A. McDevitt, K. W. Lee, G. K. Tannahill, "Determination of Low Levels of Total Non-methane Hydrocarbon Content in Ambient Air." Eniron. Sci. Technol. 16(1):57 (1982).

8. F. F. McElroy, V. L. Thompson, H. G. Richter, "A Cryogenic Preconcentration - Direct FID (PDFID) Method for Measurement of NMOC in the Ambient Air." U. S. Environmental Protection Agency, EPA-600/ (August 1985).

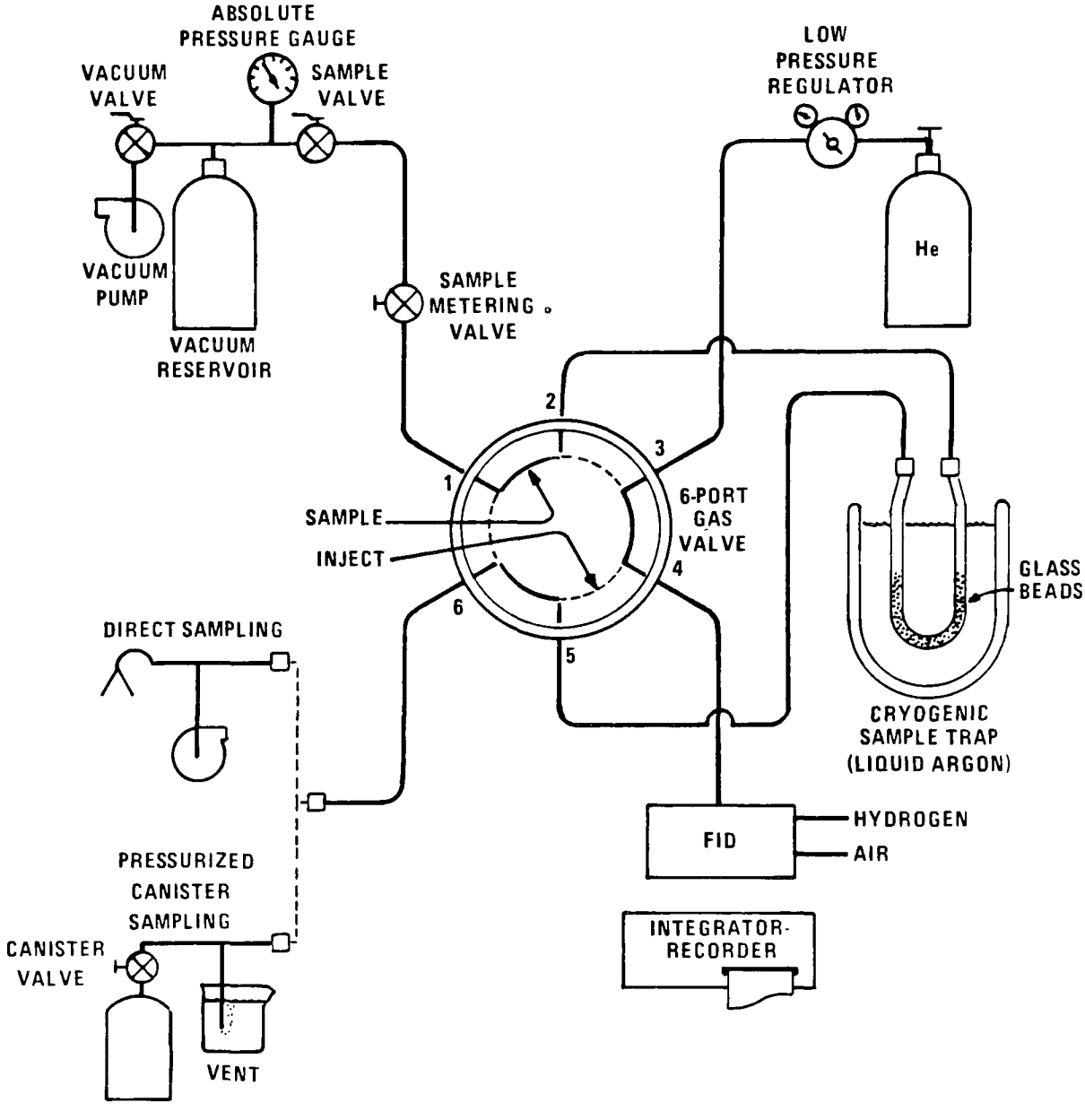

Figure 1. Schematic diagram of analysis system showing two sampling modes.

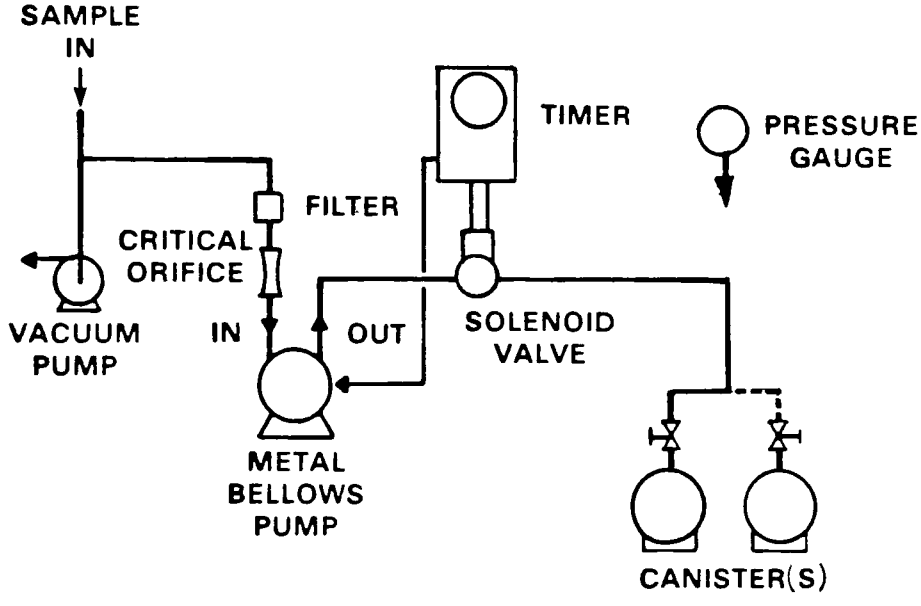

Figure 2. Sample system for automatic collection of 3-hour integrated field air samples.

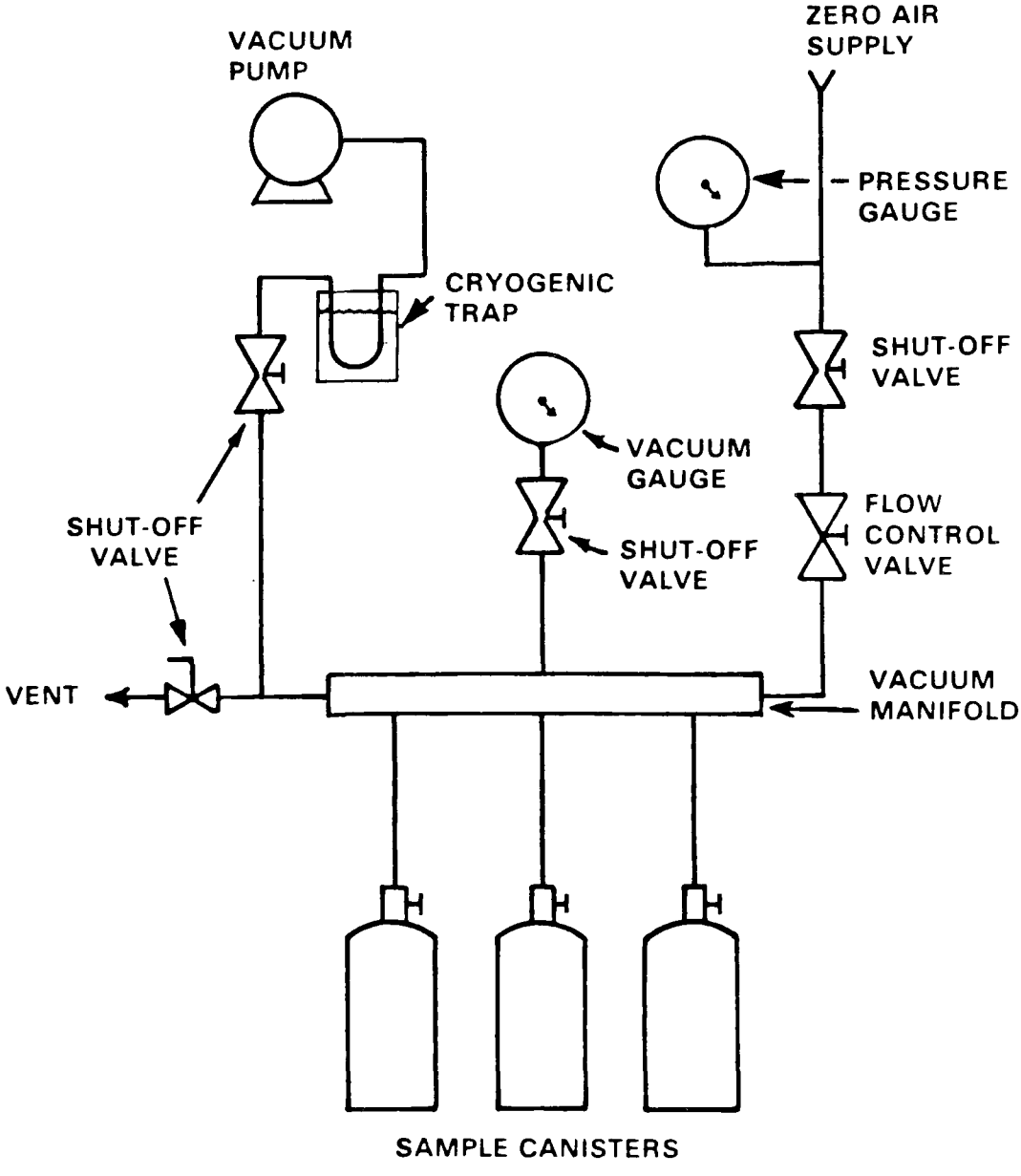

Figure 3. Canister cleaning system.

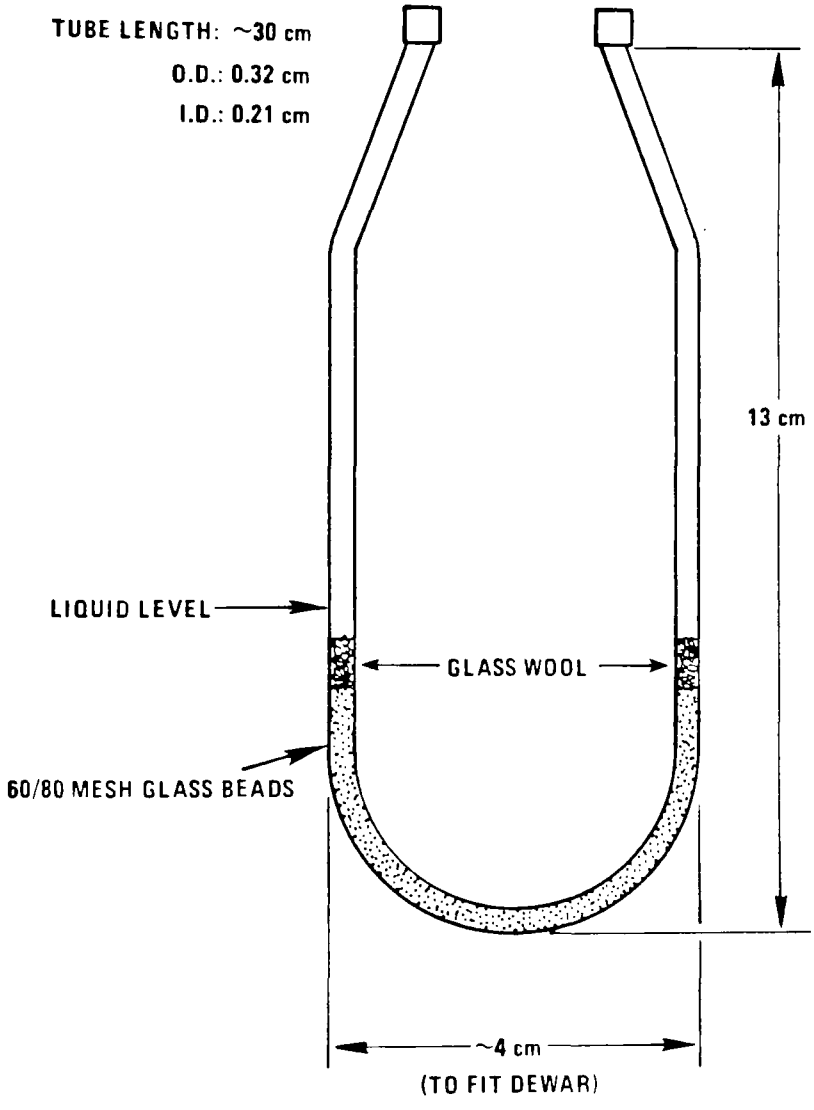

Figure 4. Cryogenic sample trap dimensions

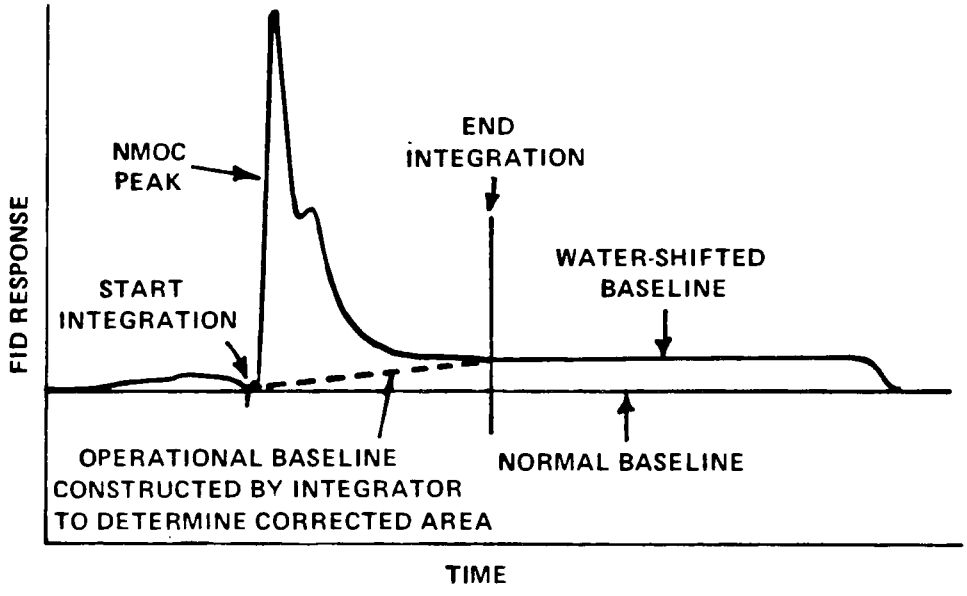

Figure 5. Construction of operational baseline and corresponding correction of peak area.

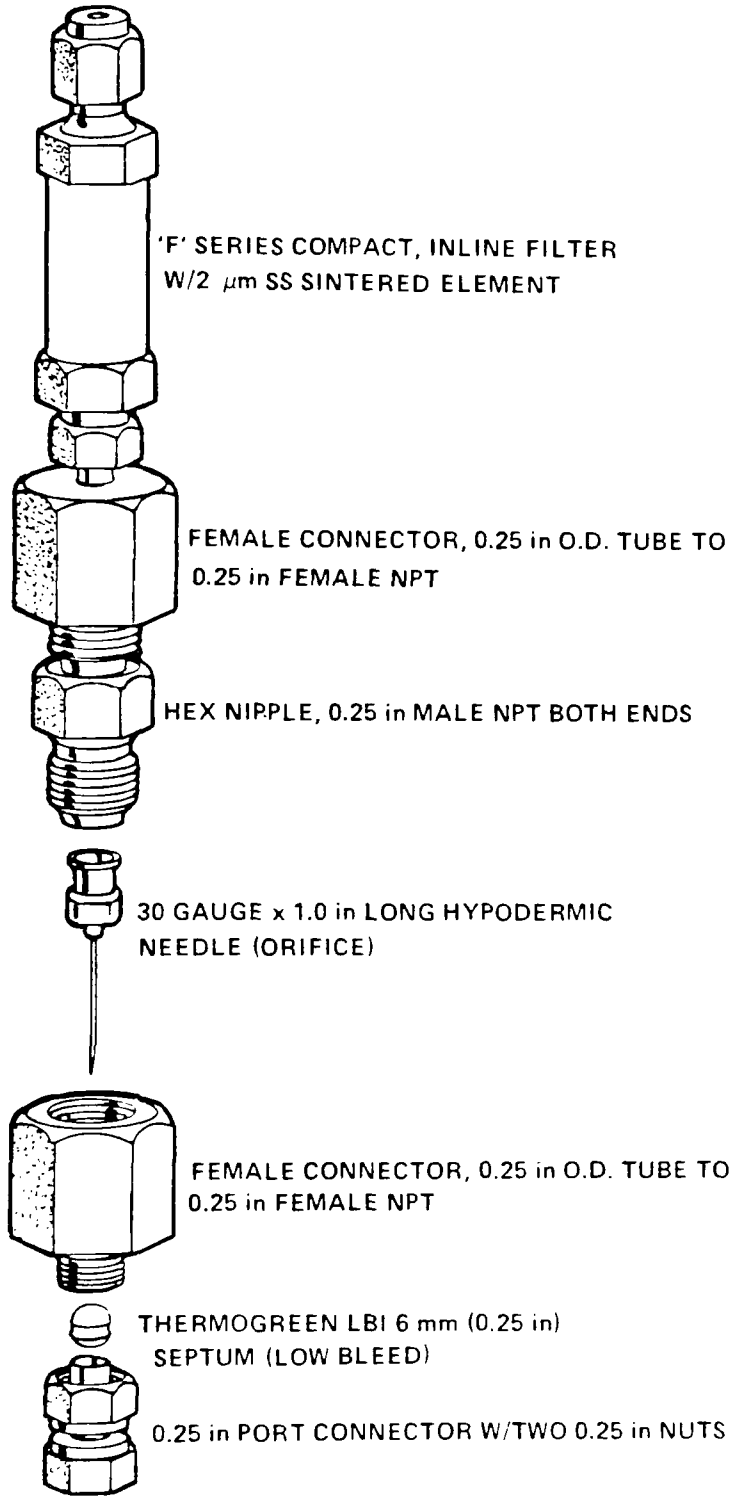

Figure 6. Suggested filter and hyopdermic needle assembly for sample inlet flow control.

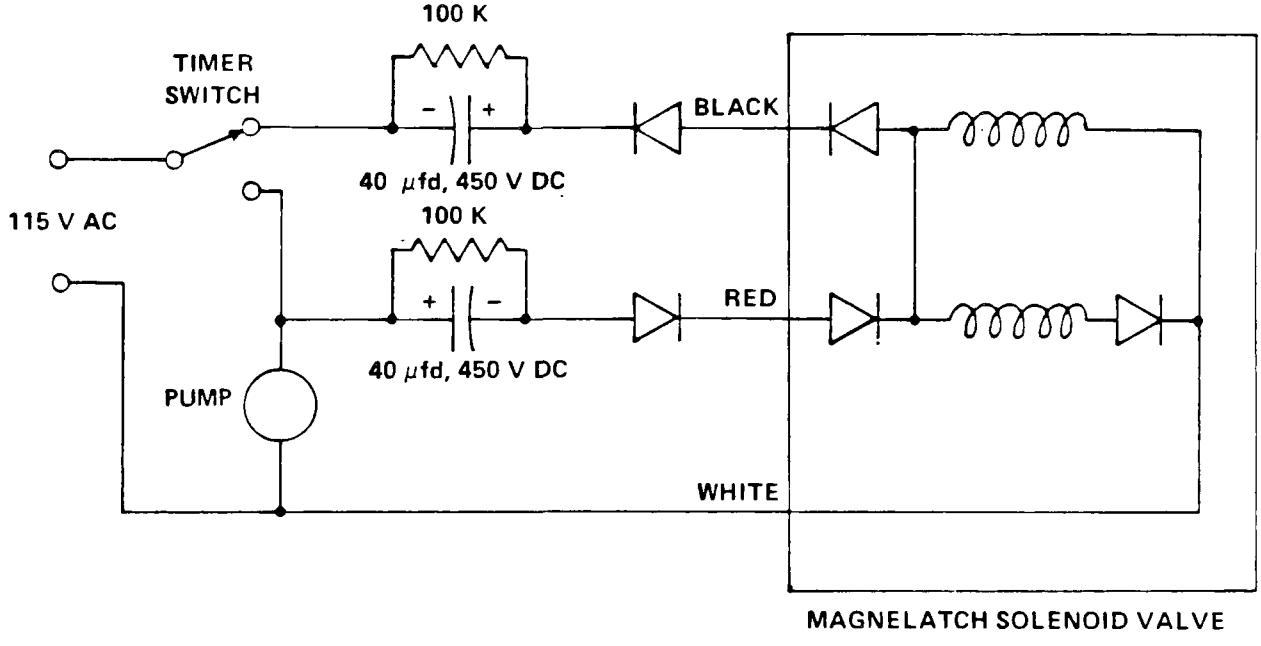

Figure 7. Electrical pulse circuit for driving Skinner Magnelatch solenoid valve with a conventional mechanical timer.

APPENDIX

ADDITIONAL INFORMATION CONCERNING SPECIAL PDFID METHOD COMPONENTS

	COMPONENT	IDENTIFICATION	SUPPLIER
1.	Sample canister	4-6 Liter	Demaray Scientific Instruments, Ltd. N. 1218C Grand Ave. Pullman, WA 99163 (509) 332-3684
2.	Absolute pressure gauge	Model 61C-ID-0410 (0-410 mm Hg), 6" Face	Wallace & Tiernam Div. of Pennwalt Corp. 25 Main Street Belleville, NJ 07109
3.	Six-port valve	Seiscor Model VIII	Seismograph Service Corp. Seiscor Division P. O. Box 1590 Tulsa, OK 74102
4.	Gas purifiers	Cat. #8125	Alltech Associates Deerfield, IL
5.	Chromatographic grade stainless steel tubing	Cat. #30101 (1/8" x 0.085")	Alltech Associates Deerfield, IL
6.	Laboratory gas chromatograph, with FID, flow controls, and integrator/ recorder	HP Model 5840A or equivalent	Hewlett-Packard Corp. Avondale, PA 19311
7.	Metal bellows pump	Model MB-151	Metal Bellows Corp. 1075 Providence Highway Sharon, MA 02067
8.	Cryogenic Dewar	8600 (285 mL)	Pope Scientific Inc. Menomonee Falls, WI 53051
9.	Magnelatch solenoid valve	V52dA1100/ CV5-LAJVF24	Skinner Valve New Britain, CT

NTIS does not permit return of items for credit or refund. A replacement will be provided if an error is made in filling your order, if the item was received in damaged condition, or if the item is defective.

Reproduced by NTIS
National Technical Information Service
U.S. Department of Commerce
Springfield, VA 22161

This report was printed specifically for your order from our collection of more than 2 million technical reports.

For economy and efficiency, NTIS does not maintain stock of its vast collection of technical reports. Rather, most documents are printed for each order. Your copy is the best possible reproduction available from our master archive. If you have any questions concerning this document or any order you placed with NTIS, please call our Customer Services Department at (703)487-4660.

Always think of NTIS when you want:
• Access to the technical, scientific, and engineering results generated by the ongoing multibillion dollar R&D program of the U.S. Government.
• R&D results from Japan, West Germany, Great Britain, and some 20 other countries, most of it reported in English.

NTIS also operates two centers that can provide you with valuable information:
• The Federal Computer Products Center - offers software and datafiles produced by Federal agencies.
• The Center for the Utilization of Federal Technology - gives you access to the best of Federal technologies and laboratory resources.

For more information about NTIS, send for our FREE *NTIS Products and Services Catalog* which describes how you can access this U.S. and foreign Government technology. Call (703)487-4650 or send this sheet to NTIS, U.S. Department of Commerce, Springfield, VA 22161. Ask for catalog, PR-827.

Name _____
Address _____
_____
_____
Telephone _____

- Your Source to U.S. and Foreign Government Research and Technology.