United States
Environmental Protection
Agency

Industrial Environmental Research
Laboratory
Research Triangle Park NC 27711

EPA-600/7-79-190
August 1979

EPA

Environmental Assessment: Source Test and Evaluation Report - Lurgi (Kosovo) Medium-Btu Gasification, Phase 1

Interagency Energy/Environment R&D Program Report

RESEARCH REPORTING SERIES

Research reports of the Office of Research and Development, U.S. Environmental Protection Agency, have been grouped into nine series. These nine broad categories were established to facilitate further development and application of environmental technology. Elimination of traditional grouping was consciously planned to foster technology transfer and a maximum interface in related fields. The nine series are:

1. Environmental Health Effects Research
2. Environmental Protection Technology
3. Ecological Research
4. Environmental Monitoring
5. Socioeconomic Environmental Studies
6. Scientific and Technical Assessment Reports (STAR)
7. Interagency Energy-Environment Research and Development
8. "Special" Reports
9. Miscellaneous Reports

This report has been assigned to the INTERAGENCY ENERGY-ENVIRONMENT RESEARCH AND DEVELOPMENT series. Reports in this series result from the effort funded under the 17-agency Federal Energy/Environment Research and Development Program. These studies relate to EPA's mission to protect the public health and welfare from adverse effects of pollutants associated with energy systems. The goal of the Program is to assure the rapid development of domestic energy supplies in an environmentally-compatible manner by providing the necessary environmental data and control technology. Investigations include analyses of the transport of energy-related pollutants and their health and ecological effects; assessments of, and development of, control technologies for energy systems; and integrated assessments of a wide range of energy-related environmental issues.

EPA REVIEW NOTICE

This report has been reviewed by the participating Federal Agencies, and approved for publication. Approval does not signify that the contents necessarily reflect the views and policies of the Government, nor does mention of trade names or commercial products constitute endorsement or recommendation for use.

This document is available to the public through the National Technical Information Service, Springfield, Virginia 22161.

EPA-600/7-79-190
August 1979

Environmental Assessment: Source Test and Evaluation Report - Lurgi (Kosovo) Medium-Btu Gasification, Phase 1

by

K. J. Bombaugh, W. E. Corbett, and M. D. Matson

Radian Corporation
P.O. Box 9948
Austin, Texas 78766

Contract No. 68-02-2608
Task No. 57
Program Element No. EHE623A

EPA Project Officer: William J. Rhodes

Industrial Environmental Research Laboratory
Office of Energy, Minerals, and Industry
Research Triangle Park, NC 27711

Prepared for

U.S. ENVIRONMENTAL PROTECTION AGENCY
Office of Research and Development
Washington, DC 20460

ABSTRACT

This report summarizes the current status of an ongoing, cooperative, environmental data acquisition program which is being jointly sponsored by the U.S. Environmental Protection Agency and the government of Yugoslavia. The subject of this test program is a commercial-scale, medium-Btu, Lurgi gasification facility which is currently operating in the Kosovo region of Yugoslavia.

The overall objective of the Kosovo test program is to characterize potential environmental problems and control technology needs associated with the gasification of lignite coal in a state-of-the-art Lurgi gasification plant. This program is especially timely because it is providing the EPA with an opportunity to study firsthand, the environmental problems which are likely to be encountered by future operators of U.S. gasification facilities.

To date, the Phase I of a multiphase test program has been completed. Phase I concentrated primarily on the characterization of major pollutants in the plant's gaseous emissions. Some characterization of the plant's liquid and solid waste streams and its by-products were also performed. A SAM/1A analysis of the gaseous emissions indicated that the major pollutants of concern are CO, benzene, H_2S, mercaptans, and NH_3. Analysis of the Phenosolvan effluent indicated a high concentration of organics with a relatively low phenol concentration (170-270 mg/ℓ). The gasifier section effluent was relatively low in organics and had a high pH of 11-12. Analysis of the by-product streams indicated that the sulfur concentration of "lights" (i.e., gasoline) was significantly higher than the "heavies" (i.e., tar).

The next phase of this test program will emphasize detailed characterization of trace organics and trace elements in the plant's multimedia waste streams and evaluation of control options of streams containing potentially harmful pollutants.

TABLE OF CONTENTS

Section		Page
Abstract		ii
Figures		v
Tables		vi
Acknowledgements		viii
1.0	INTRODUCTION	1
	1.1 SCOPE OF WORK	1
	1.2 PROGRAM ORGANIZATION	2
	1.3 TEST SCHEDULE	4
	1.4 REPORT ORGANIZATION	4
2.0	PLANT DESCRIPTION	6
	2.1 PROCESS OVERVIEW	6
	2.2 FLEISSNER DRYING SECTION	11
	2.3 GASIFICATION SECTION	16
	2.4 RECTISOL SECTION	19
	2.5 TAR/OIL SEPARATION SECTION	22
	2.6 PHENOSOLVAN SECTION	23
	2.7 BY-PRODUCT STORAGE SECTION	26
	2.8 AUXILIARIES	31
3.0	SAMPLING PROCEDURES	32
	3.1 FLOW MEASUREMENT PROCEDURES	34
	3.2 PARTICULATES	36

TABLE OF CONTENTS (Continued)

Section		Page
	3.3 GAS SAMPLING FOR WET CHEMICAL ANALYSIS	37
	3.4 GRAB GAS SAMPLES FOR GAS CHROMATOGRAPHY	38
4.0	ANALYTICAL METHODOLOGY	40
	4.1 ANALYTICAL METHODS FOR GASES	40
	4.2 ANALYTICAL METHODS FOR WASTE WATERS	44
	4.3 ANALYTICAL METHODS FOR SOLIDS	44
5.0	RESULTS AND RECOMMENDATIONS	45
	5.1 GASEOUS EMISSIONS	48
	5.2 LIQUID EFFLUENTS, LIQUID BY-PRODUCTS AND SOLID WASTES	57
	5.3 MASS BALANCES	62
	5.4 DISCUSSION OF RESULTS AND RECOMMENDATIONS FOR FUTURE TESTING	64
	REFERENCES	68
	APPENDIX A: PHASE I DATA SUMMARY TABLES FOR GASES	A-1
	APPENDIX B: PHASE I DATA SUMMARY TABLES - LIQUIDS AND SOLIDS	B-1
	APPENDIX C: MASS BALANCE CALCULATIONS	C-1

FIGURES

Number		Page
1-1	KOSOVO TEST PROGRAM PARTICIPATING ORGANIZATIONS AND AREAS OF RESPONSIBILITY.....	3
2-1	KOSOVO GASIFICATION PLANT AND ITS RELATIONSHIP TO SURROUNDING INDUSTRIES.....	7
2-2	OVERALL PLANT FLOW SCHEME - KOSOVO GASIFICATION PLANT.....	8
2-3	SIMPLIFIED FLOW SCHEMATIC-KOSOVO GASIFICATION PLANT.....	12
2-4	PROCESS FLOW DIAGRAM SHOWING SAMPLING POINTS IN KOSOVO PLANT FLEISSNER DRYING SECTION.....	14
2-5	PROCESS FLOW DIAGRAM SHOWING SAMPLING POINTS IN KOSOVO PLANT GASIFICATION SECTION.....	17
2-6	PROCESS FLOW DIAGRAM SHOWING SAMPLING POINTS IN KOSOVO PLANT RECTISOL SECTION.....	20
2-7	PROCESS FLOW DIAGRAM SHOWING SAMPLING POINTS IN KOSOVO PLANT TAR/OIL SEPARATION SECTION....	24
2-8	PROCESS FLOW DIAGRAM SHOWING SAMPLING POINTS IN KOSOVO PLANT PHENOSOLVAN SECTION.....	27
2-9	PROCESS FLOW DIAGRAM SHOWING SAMPLING POINTS IN KOSOVO BY-PRODUCTS STORAGE AREA.....	29
3-1	TYPICAL SURGE TANK VENT PIPE ARRANGEMENT.....	35
3-2	FLOW MEASUREMENT APPROACH FOR HIGH VELOCITY TANK VENTS.....	35
3-3	FLOW MEASUREMENT APPROACH FOR LOW VELOCITY TANK VENT FLOWS.....	36
5-1	KOSOVO LIGNITE DATA GATHERED DURING CAMPAIGN I.....	46

TABLES

Number		Page
1-1	KOSOVO TEST PROGRAM OBJECTIVES AND SCHEDULE	5
2-1	KOSOVO PLANT DESIGN DATA (ASSUMES 5 OF 6 GASIFIERS IN SERVICE)	10
2-2	SIGNIFICANT KOSOVO PLANT FLEISSNER DRYING SECTION PROCESS AND EMISSION STREAMS	15
2-3	SIGNIFICANT KOSOVO PLANT GASIFICATION PROCESS AND EMISSION STREAMS	18
2-4	SIGNIFICANT KOSOVO PLANT RECTISOL SECTION PROCESS AND EMISSION STREAMS	21
2-5	SIGNIFICANT KOSOVO PLANT TAR SEPARATION SECTION PROCESS AND EMISSION STREAMS	25
2-6	SIGNIFICANT KOSOVO PLANT PHENOSOLVAN SECTION PROCESS AND EMISSION STREAMS	28
2-7	SIGNIFICANT KOSOVO PLANT BY-PRODUCT STORAGE SECTION PROCESS AND EMISSION STREAMS	30
3-1	SAMPLING PROCEDURES	33
4-1	ANALYTICAL PROCEDURES FOR GASES	41
4-2	ANALYTICAL PROCEDURES FOR WASTE WATERS	42
4-3	ANALYTICAL PROCEDURES FOR SOLIDS	43
5-1	DMEG VALUES FOR GASEOUS SPECIES MEASURED IN KOSOVO STREAMS	52
5-2	HEALTH-BASED DS, TDS, AND TWDS VALUES FOR KOSOVO "HIGH PRIORITY" ATMOSPHERIC EMISSIONS STREAMS	53
5-3	ECOLOGY-BASED DS VALUES FOR KOSOVO "HIGH PRIORITY" ATMOSPHERIC EMISSION STREAMS	54
5-4	ANALYTICAL DATA FOR KOSOVO "HIGH PRIORITY" GASEOUS EMISSION STREAMS SAMPLED DURING PHASE I	55

TABLES (Continued)

Number		Page
5-5	MAJOR SOURCES OF LIQUID EFFLUENTS, LIQUID BY-PRODUCTS AND SOLID WASTES AT THE KOSOVO PLANT	58
5-6	KOSOVO WASTEWATER PROPERTIES (PHASE I DATA)	59
5-7	KOSOVO LIQUID BY-PRODUCT DATA	61
5-8	MASS BALANCE ACROSS THE LURGI GASIFIER AT KOSOVO	63
5-9	SULFUR BALANCE ACROSS LURGI GASIFICATION FACILITY AT KOSOVO	63
5-10	KOSOVO WASTE STREAMS - GENERAL SUMMARY OF ADDITIONAL DATA NEEDS	65

ACKNOWLEDGEMENTS

The authors wish to express their appreciation to the following individuals for their timely and very beneficial contributions to the work which is described in this report:

Mira Mitrović and Dragan Petković (Rudarski Institute - Belgrade, Yugoslavia)

Bećir Salja, Shani Dulje, Emili Boti (Kosovo Plant Operations)

Slobodan Kapor (Institute for the use of Nuclear Energy in Forestry and Agriculture - INEP)

Radamir Vićić, Branislav Tomasević, Mile Miloslavljević (Kosovo Institute)

Klaus Schwitzgebel, Gordon Page, Bob Collins, Chuck Hudak, Bob Magee and Ken Lee (Radian Corporation)

1.0 INTRODUCTION

The Kosovo test program was conceived by the EPA in response to a need for representative data on the potential environmental impacts of Lurgi gasification technology. Because a number of U.S. companies have announced plans to construct medium- and/or high-Btu gasification plants based upon Lurgi technology and a number of other groups are seriously considering this possibility, the EPA is interested in taking appropriate and timely steps to guarantee the environmental acceptability of those future facilities.

1.1 Scope of Work

The test program at Kosovo involves four phases of effort. This report summarizes the results of Phase I.

In Phase I, a group of approximately 50 feed, product, by-product and gaseous, liquid and solid waste streams were studied. The test work consisted primarily of measuring the flow rates of the major emission streams from the plant and characterizing these streams with respect to their major components. This phase of effort also served as a source screening since essentially all of the streams were found to be sources of harmful pollutants. They will be studied further in subsequent phases.

In general, the Phase I test program focused on the plant process and waste streams that were expected to be major sources of environmentally significant emissions. The selection of streams for examination in Phase I was based upon:

- visual inspection of the plant and its process and waste streams,
- design flowrates and process schematics,
- the results of previous test work,
- a series of source screening measurements (Orsat measurements), and
- engineering judgement.

During Phase II, a detailed characterization will be made of approximately 30 key process and emission streams. The work will involve gathering data on stream flow characteristics and concentrations of selected minor and trace components, including trace metals and trace organics.

In Phase III, ambient concentrations of selected pollutants will be monitored at several locations inside and outside (upwind and downwind) of the plant's boundaries. It is expected that data gathered during Phase III will define the potential impact of a Lurgi plant on ambient air and will also validate emissions data gathered in the other program phases.

Phase IV will concentrate on fugitive emission sources within the Kosovo facilities and will define the relative significance of fugitive emissions on the overall emission character of the facilities.

1.2 Program Organization

As shown in Figure 1-1, the prime contractor for the Phase I test work was Rudarski Institute of Belgrade, Yugoslavia

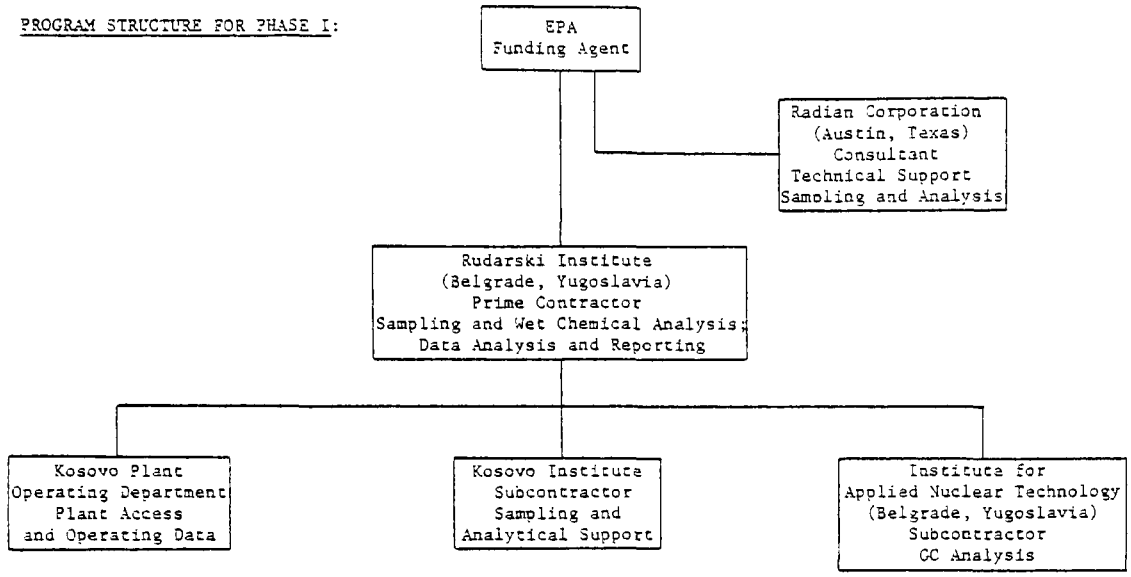

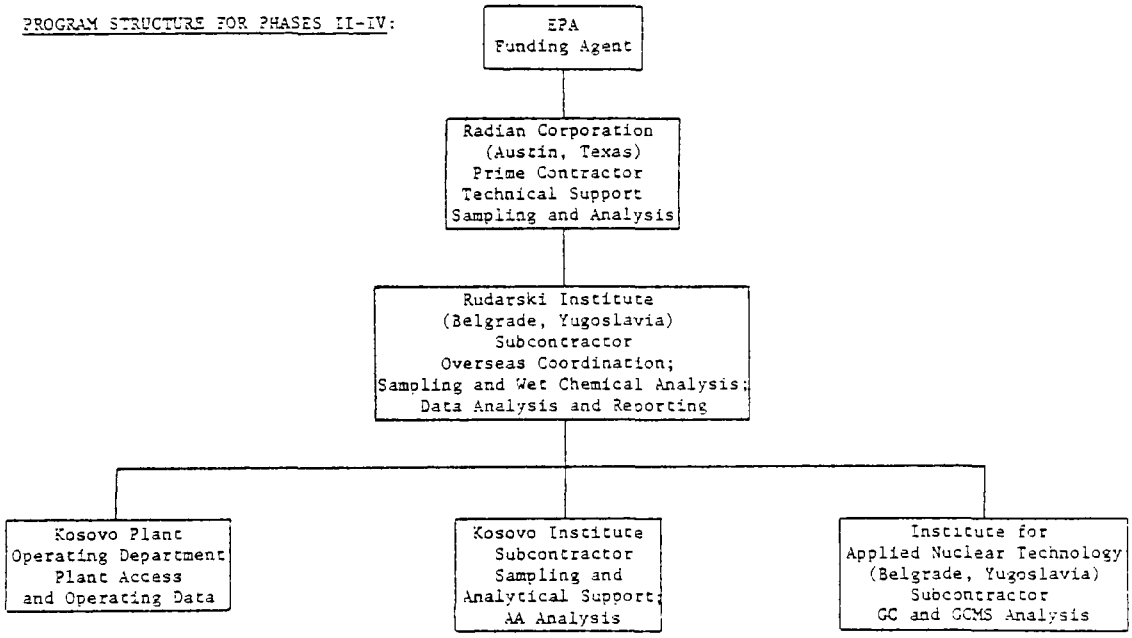

Figure 1-1. Kosovo Test Program Participating Organizations and Areas of Responsibility

Radian Corporation, of Austin, Texas, is prime contractor for the work being performed in test Phases II-IV. The areas of responsibility for the major program participants are also shown in the figure.

1.3 Test Schedule

The test schedule followed in Phase I along with a proposed schedule for subsequent phases of effort is shown in Table 1-1. As indicated in the table, the first test phase was divided into several test campaigns. Based on the results of initial sampling, additional campaigns may be scheduled for Phases II-IV.

1.4 Report Organization

Section 2.0 of this report contains a general description of the Kosovo Lurgi gasification facility and an overview of the process. Selected parts of the plant are described in detail, as they relate to the testing carried out in Phase I. A description of the sampling procedures followed in Phase I is given in Section 3.0 while Section 4.0 outlines the analytical methodology. Section 5.0 contains a summary of the results of Phase I testing and recommendations for future testing at Kosovo.

TABLE 1-1. KOSOVO TEST PROGRAM OBJECTIVES AND SCHEDULE

	Test Objectives	Date
Phase 1:	Emission Source Screening (Major Components)	
Campaign 1	Perfect Methodology	November 1977
Campaign 2	Data Acquisition	June 1978
Campaign 3	Fill in Gaps	November 1978
Phase II:	Additional Source Characterization (Minor/Trace Components)	
Campaign 1	Data Acquisition	Summer 1979
Campaign 2	As Needed	TBD
Phase III:	Ambient Pollutant Concentrations	
Campaign 1	Data Acquisition	Summer 1979
Campaign 2	As Needed	TBD
Phase IV:	Characterize Fugitive Emission Sources	
Campaign 1	Data Acquisition	Summer 1980
Campaign 2	As Needed	TBD

TBD - To be determined

2.0 PLANT DESCRIPTION

The major objectives of this section are to:

- describe briefly the Kosovo gasification plant and its operating characteristics, and
- identify the sources of the plant's most environmentally significant waste streams.

2.1 Process Overview

The Kosovo Lurgi gasification facility is an integral part of a large mine-mouth industrial complex. This complex is located near the city of Pristina, in southern Yugoslavia.

As shown in Figure 2-1, the Kosovo gasification plant consumes a dried lignite feedstock and produces two primary products: a medium-BTU fuel gas and hydrogen, which is subsequently used for ammonia synthesis.

A detailed process flowsheet for the Kosovo gasification plant is shown in Figure 2-2. This figure also shows the sources of the plant's most significant air, water and solid waste streams.

Many of the process units which have been proposed for use in conceptual U.S. gasification plants are currently being used at Kosovo. This includes tar/oil separation facilities, a Rectisol acid gas removal unit, a Phenosolvan unit and by-product recovery facilities. The Kosovo plant is therefore felt to be representative of Lurgi gasification facilities which are under consideration for future commercialization in the U.S.

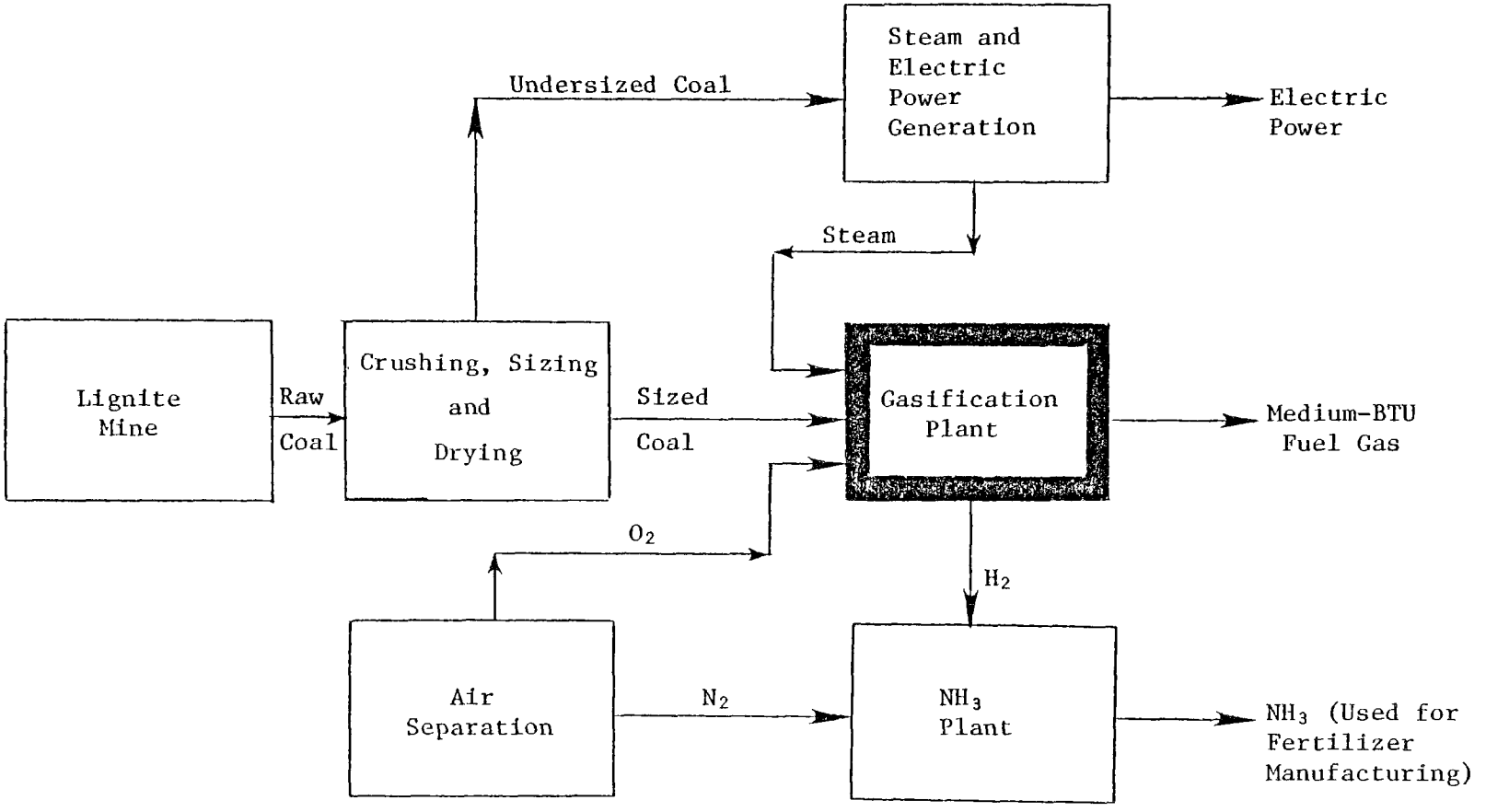

Figure 2-1. Kosovo Gasification Plant and its Relationship to Surrounding Industries.

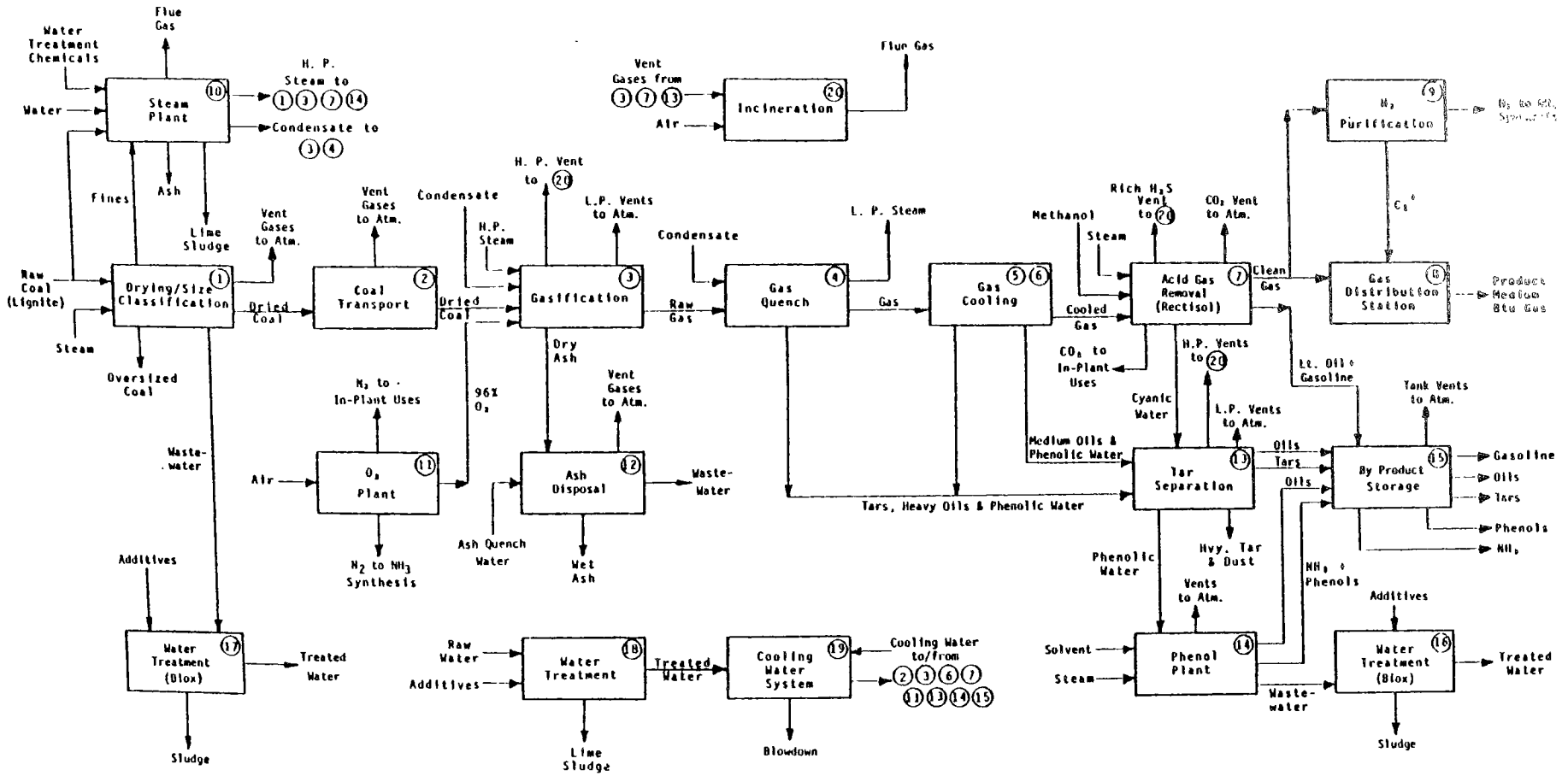

Notes: H.P. = High Pressure
L.P. = Low Pressure

○ - The numbers shown in circles are the codes used by plant personnel to identify specific plant units. These codes are used in this report to identify the sources of specific plant process and waste streams.

While the process flow scheme at Kosovo is representative of future U.S. Lurgi plants, the environmental control practices followed at that plant are not. Although many of the plant's waste streams are controlled, most of these controls would not be characterized as "best available" by U.S. standards For this reason, total emissions from the Kosovo plant greatly exceed the emissions which are expected from a U.S. facility of comparable size. Nevertheless, the types of emission problems seen at Kosovo are representative of the problems which will have to be considered by operators of future U.S. gasification facilities.

The lignite which is fed to the Kosovo Lurgi gasifiers is dried by the Fleissner method (high temperature steam soak) and sized to reject particles less than 6 mm or greater than 60 mm in diameter. After the coal is gasified by reaction with oxygen and steam at about 2.5 MPa (25 atm) pressure, the raw gas is sent to a series of gas cooling and purification operations. First, in the cooling section, tars, oils, and process condensate (phenolic water) are condensed and removed from the raw gas. Then, in the acid gas removal section, roughly 90% of the carbon dioxide and more than 99% of the hydrogen sulfide are removed.

Each of the six Kosovo Lurgi gasifiers is designed to convert 16 metric tons of dried lignite into 12,500 Nm^3 of clean (after Rectisol) fuel gas per hour. Useful by-products recovered in the tar/oil separation, Rectisol and Phenosolvan sections include tars, oils, gasoline, NH_4OH and crude phenols. Design capacity data for the Kosovo gasification plant are summarized in Table 2-1.

The plant sections examined in the Phase I test program include:

TABLE 2-1. KOSOVO PLANT DESIGN DATA (ASSUMES 5 OF 6 GASIFIERS IN SERVICE)

INPUTS:	
Lignite	80 MT/hr*
Steam	65 MT/hr
Oxygen (96 Vol. %)	9,900 Nm^3/hr
OUTPUTS:	
Products:	
Clean Gas	60,000 Nm^3/hr
By-Products:	
Tars	2.2 MT/hr
Oils	1.3 MT/hr
Gasoline	0.65 MT/hr
NH_4OH	0.96 MT/hr
Crude Phenols	0.36 MT/hr

*MT = Metric Ton = 1000 kg

- Gasification Section (gasifiers and ash handling equipment)
- Rectisol Plant
- Tar/Oil Separation Section
- Phenosolvan Unit
- By-Product Storage
- Auxiliaries (flare)

These sections were selected for testing because they are all sources of environmentally significant waste streams. Plant sections not selected for testing in Phase I are indicated in Figure 2-3. This figure also indicates the reasons why specific plant sections were not selected for testing in the Phase I program.

2.2 Fleissner Drying Section

The moisture content of raw Kosovo lignite is normally very high (in the range of 40-50% by weight). A substantial portion of this moisture (~50%) must be removed in order to permit the efficient operation of a Lurgi gasifier. For this reason, run-of-mine Kosovo lignite is dried and sized prior to its introduction into the gasification section.

The drying process used at Kosovo was developed by H. Fleissner in Germany in the 1920's. This process uses pressurized, saturated steam to heat the coal (in several steps) to a temperature sufficient to drive moisture from the coal without

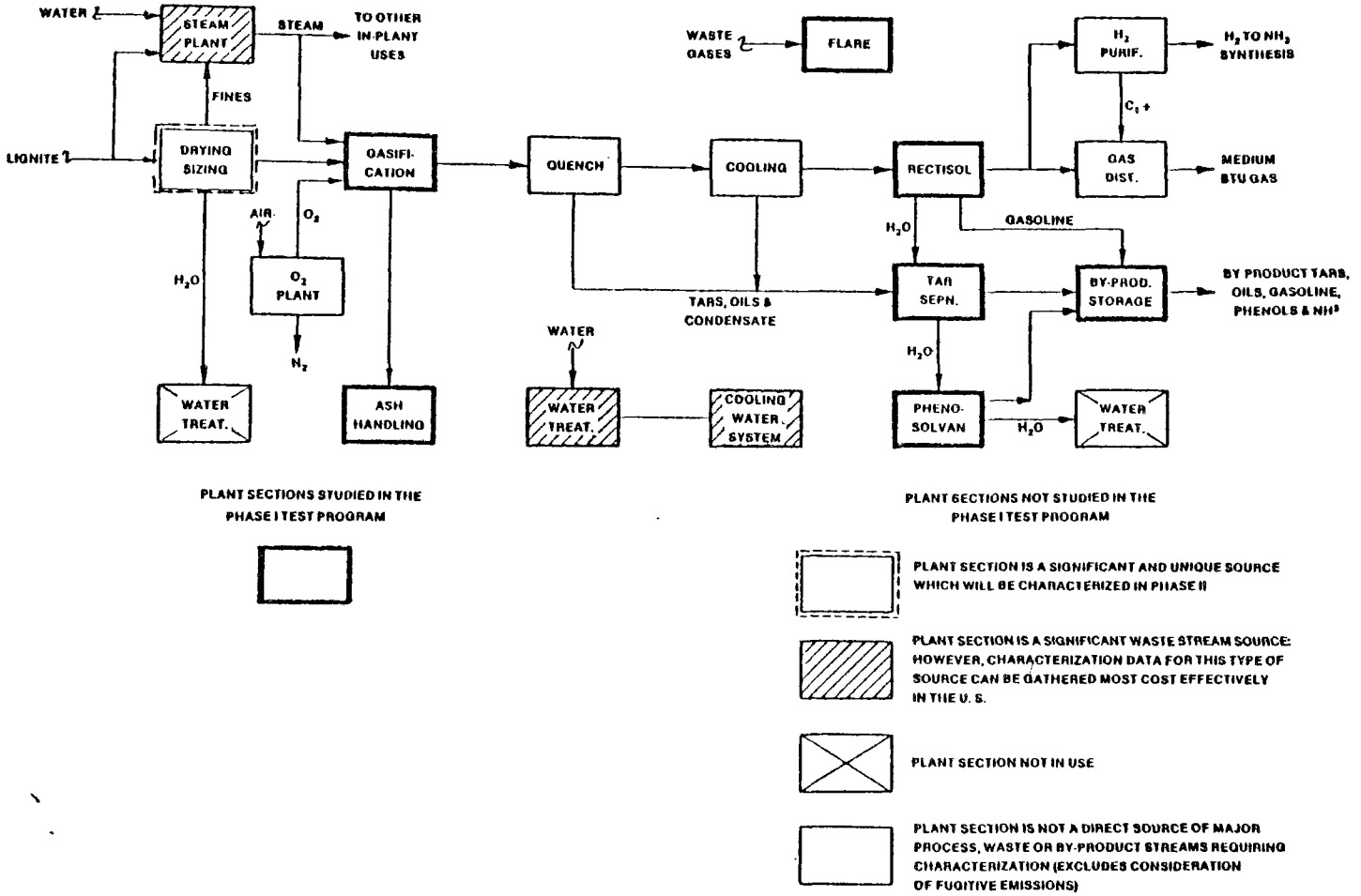

FIGURE 2-3 SIMPLIFIED FLOW SCHEMATIC-KOSOVO GASIFICATION PLANT

destroying the structural integrity of the coal matrix. Maintenance of structural integrity is important because any alteration of the internal pore structure of the lignite could adversely affect its reactivity and weaken the coal particle to the point that fracturing and generation of fines could become a significant problem. According to published data on the Fleissner drying process, the amount of moisture that remains in the coal after treatment is a function mainly of the steam pressure applied in the process. At Kosovo, the maximum steam pressure used is about 3 MPa (30 atm) and the moisture content of the dried lignite is normally about 25 wt%. A simplified flow diagram of the Fleissner drying section indicating the sources of the major emission and effluent streams generated in this section is shown in Figure 2-4. The emission streams are listed in Table 2-2.

The autoclaves used to dry Kosovo lignite are operated in a batchwise manner. A complete drying cycle, which lasts from 160-200 minutes, involves the following steps:

Step	Approximate Duration
Coal Charging	10 min.
First Preheating (low pressure steam)	20 min.
Second Preheating (int. pressure steam)	20 min.
Treatment with Fresh (high pressure steam)	60 min.
First Discharge (int. pressure steam)	20 min.
Second Discharge (low pressure steam)	20 min.
Emptying Autoclave	10 min.
TOTAL	160 min.

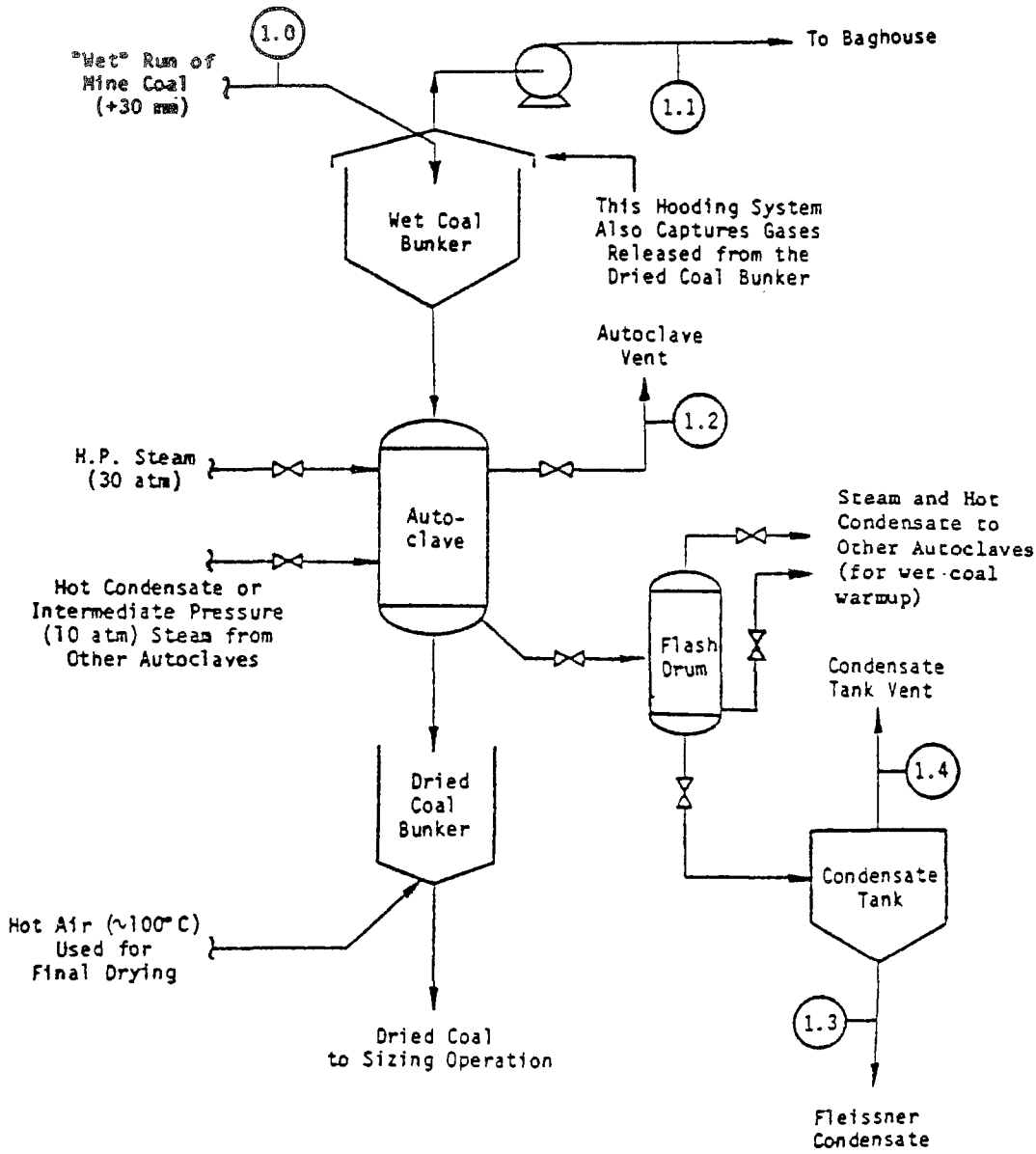

Figure 2-4. Process Flow Diagram Showing Sampling Points In Kosovo Plant Fleissner Drying Section

TABLE 2-2. SIGNIFICANT KOSOVO PLANT FLEISSNER DRYING SECTION PROCESS AND EMISSION STREAMS

Stream[1] Number	Stream Description	Stream[2] Type	Estimated Flow Rate	Measured[3] Flow Rate (Phase I)	Comments
1.0	"Wet" coal from mine	S	24 MT/hr	NM	These four streams will be sampled in Phase II
1.1	Coal bunker vent	G	Unknown	NM	
1.2	Autoclave vent	G	Unknown	NM	
1.3	Fleissner condensate	L	Unknown	NM	
1.4	Condensate tank vent	G	Unknown	NM	

[1]Stream locations are shown in Figure 2-4.

[2]G - gaseous; L - liquid; S - solid.

[3]NM - not measured.

The autoclaves are arranged in groups of four, with the blowdown steam and condensate from one autoclave preheating the coal entering other autoclaves.

2.3 Gasification Section

A process flow diagram of the Kosovo plant gasification and ash handling sections is presented in Figure 2-5. This figure also shows the locations of major emission streams originating in these sections. Table 2-3 lists the process and emission streams identified in Figure 2-5 and gives values for their design, estimated or measured flow rates.

The Kosovo plant gasification section contains six pressurized, fixed-bed, oxygen-blown Lurgi gasifiers. In this section, dried lignite is fed by conveyor belts to a coal bunker located above each gasifier. Nitrogen is used to purge each bunker to guard against the danger of spontaneous ignition of the lignite. Emissions from the coal conveying and storage area, consisting mostly of particulate matter, are water scrubbed and vented to the atmosphere.

Steam and oxygen injected at the bottom of each gasifier react with the moving coal bed to produce a hot raw product gas. Hot ash from the bottom of each gasifier is collected in a lock hopper and water-quenched prior to disposal.

The hot raw gas exiting the top of each gasifier is directly quenched with water and then further cooled in a series of indirect heat exchangers. Condensed organic liquids and process condensate from this section are sent to the tar/oil separation section where the aqueous and organic fractions in the stream are separated.

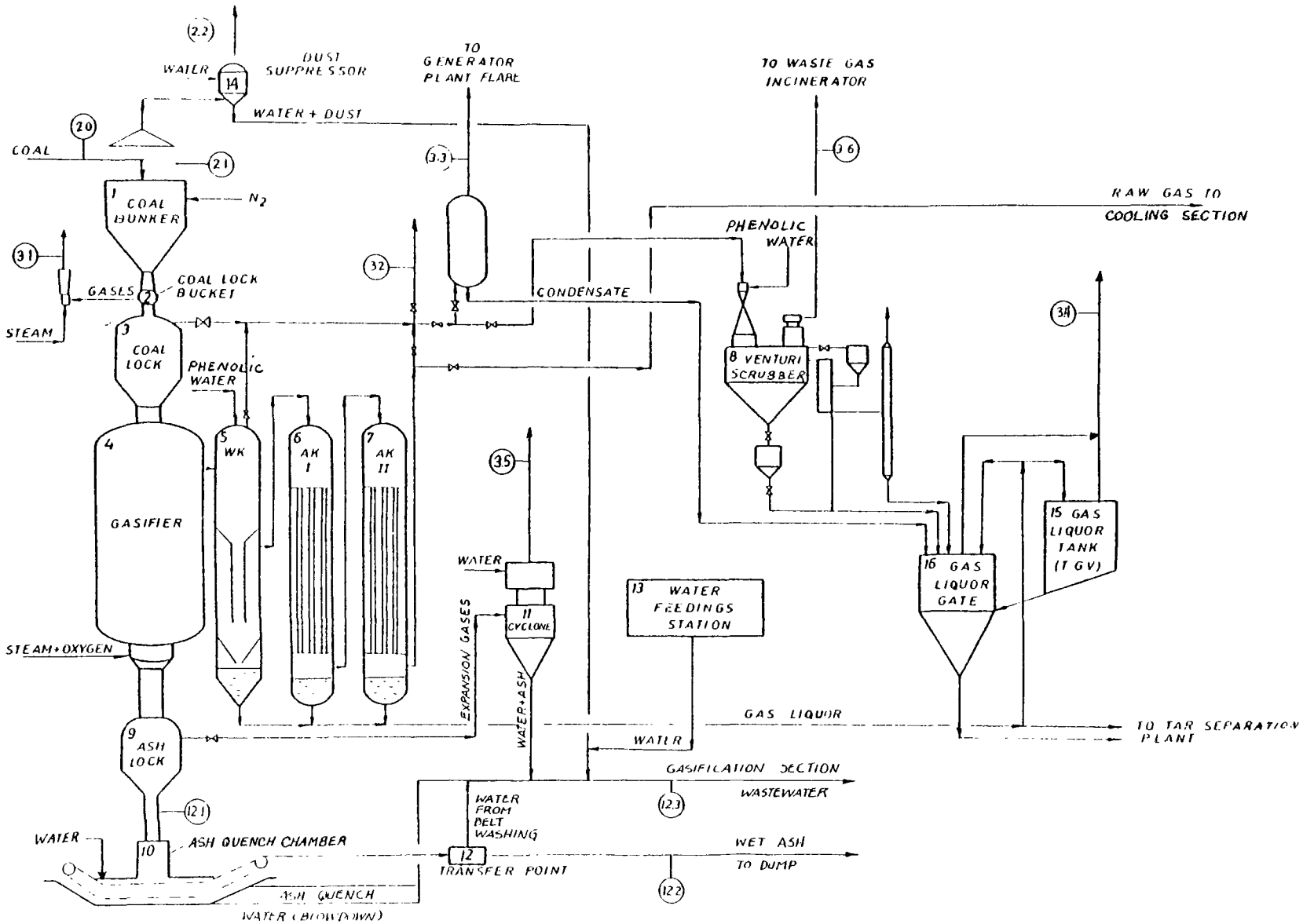

Figure 2-5. Process Flow Diagram Showing Sampling Points In Kosovo Plant Gasification Section

TABLE 2-3. SIGNIFICANT KOSOVO PLANT GASIFICATION PROCESS AND EMISSION STREAMS

Stream[1] Number	Stream Description	Stream[2] Type	Design or[3,4] Estimated Flow Rate	Measured[3,5] Flow Rate (Phase I)	Comments
2.0	Dried sized coal	S	16.0 MT/hr (d)	NM	
2.1	Coal bunker area - ambient sample	G	NA	NA	
2.2	Coal bunker vent	G	4,000 Nm^3/hr (d)	14,000 Nm^3/hr (C2); 4,200 Nm^3/hr (C3)	Reason for apparent high value during Campaign 2 cannot be explained
3.1	Coal bucket vent	G	<26 Nm^3/hr[6] (e)	Negligible	This vent line is generally plugged with coal dust and tars
3.2	Low pressure coal lock vent	G	36 Nm^3/hr (d)	NM	Flow measurement attempted but not successfully obtained
3.3	Start-up vent (to flare)	G	Variable	NM	This stream will be characterized in Phase II
3.4	Liquor tank vent	G	40 Nm^3/hr (e)	NM	
3.5	Ash lock vent	G	28 Nm^3/hr[6] (d)	~65 Nm^3/hr (C3)	
3.6	High pressure coal lock vent (to main flare)	G	350 Nm^3/hr (d)	~400 Nm^3/hr (C3)	
12.1	Gasifier ash (dry)	S	2.7 MT/hr (d)	NM	
12.2	Gasifier ash (wet)	S	>2.7 MT/hr (e)	NM	
12.3	Gasification section wastewater	L	3 m^3/hr (d)	NM	

[1]Stream locations are shown in Figure 2-5.

[2]G - gaseous; L - liquid; S - solid.

[3]All flow rates normalized to a one-gasifier-in-service basis.

[4](d) - design; (e) - estimated; NA - not applicable.

[5]NA - not applicable; NM - not measured; (C2) - measured during Campaign 2; (C3) - measured during Campaign 3.

[6]Process gas flow only - does not include steam injected into vent system.

The high pressure purge gases from the coal lock hopper are scrubbed in a venturi and routed to the flare. Low pressure vent gases are released directly to the atmosphere. Coal lock gas scrubbing liquor is stored in a vented holding tank. Recycled phenolic water from the tar/oil separation section is used as makeup scrubbing liquor to this system. Blowdown liquor is routed to the tar separator. Ash lock hopper decompression gases are scrubbed in a wet cyclone and vented to the atmosphere.

During the initial stages of gasifier start-up, raw product gas is vented directly to the atmosphere. Later in the start-up sequence, this gas is flared until desired conditions are established and a consistent quality gas is being produced. Start-up gas was not sampled during the Phase I test program.

2.4 Rectisol Section

The Rectisol unit at Kosovo is a major gas purification step as well as a significant source of gaseous wastes. A process flow diagram showing the locations of the key process and emission streams in this unit is presented in Figure 2-6; available flow data on these streams are presented in Table 2-4.

Acid gases (e.g., CO_2, H_2S and HCN) are removed from the cooled raw gas at Kosovo by sorption in a cold methanol-water solution. First, the cooled raw product gas passes through a separator and an initial cooling stage where it receives a cold water wash. Then, the gas is cooled further in a heat exchanger and a second cooling stage where it receives a wash with cold, CO_2-rich methanol before it is scrubbed with more cold methanol in the primary H_2S absorber. The "H_2S-free" gas is then sent to a series of CO_2 absorbers. In these columns, CO_2 is absorbed by a wash of "lean" methanol. Most of

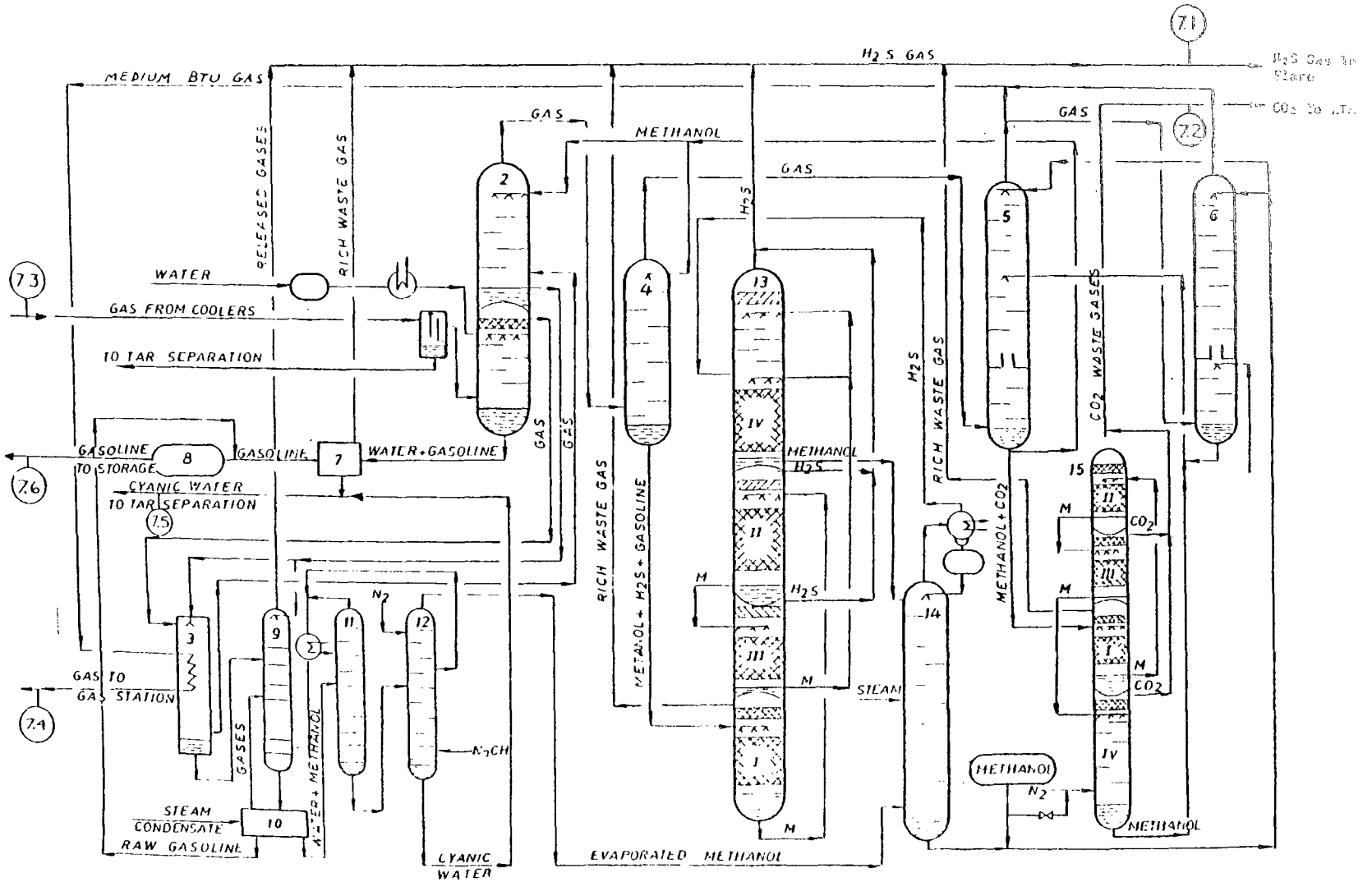

1) Separator
2) Cooler (1st stage, H_2O; 2nd stage, MeOH)
3) Heat exchanger (cools gases from 1st stage of column 2, heats purified medium-Btu gas)
4) H_2S absorber
5) CO_2 absorber (1st)
6) CO_2 absorber (2nd)
7) Gasoline-H_2O separator
8) Gasoline surge tank
9) Expander
10) Gasoline-methanol, H_2O extractor
11) Methanol-water stripper
12) Methanol-recovery column
13) Methanol stripper (H_2S)
14) Hot regenerator
15) Methanol stripper (CO_2)

Figure 2-6. Process Flow Diagram Showing Sampling Points in Kosovo Plant Rectisol Section

TABLE 2-4. SIGNIFICANT KOSOVO PLANT RECTISOL SECTION PROCESS AND EMISSION STREAMS

Stream[1] Number	Stream Description	Stream[2] Type	Design or[3] Estimated Flow Rate	Measured[3,4] Flow Rate (Phase 1)	Comments
7.1	H_2S rich gas (to main flare)	G	2,500 Nm^3/hr	NM	Flow measurement attempted in Campaign 3, but not successfully completed
7.2	CO_2 vent gas	G	2,200 Nm^3/hr	1,100 Nm^3/hr (C2) 4,700 Nm^3/hr (C3)	
7.3	Rectisol inlet gas	G	17,200 Nm^3/hr	NM	
7.4	Rectisol outlet gas	G	12,000 Nm^3/hr	NM	
7.5	Cyanic water	L	.8 m^3/hr	NM	
7.6	Product gasoline to storage	L	.13 MT/hr	NM	

[1]Stream locations are shown in Figure 2-6.

[2]G - gaseous; L - liquid.

[3]All flow rates normalized to a one-gasifier-in-service basis.

[4]NM - not measured; (C2) - measured during Campaign 2; (C3) - measured during Campaign 3.

the overhead gas from the first CO_2 absorber is fed directly into the fuel gas distribution system. A second CO_2 absorber is used for final CO_2 removal whenever "clean" product gas is needed for feed to a cryogenic H_2 separation unit.

The H_2S-rich waste gas which is generated in this unit (stream 7.1) is sent to the main plant flare while the CO_2-rich waste gas (stream 7.2) is vented directly to the atmosphere. Gasoline and cyanic water condensed from the raw gas in this unit are sent to the by-product storage and tar/oil separation sections, respectively. The clean fuel gas leaving the Rectisol unit is fed into the product gas distribution system.

2.5 Tar/Oil Separation Section

The first step in the plant's wastewater treatment sequence takes place in the tar/oil separation section. Liquid streams fed to the tar/oil separation section come from several locations within the plant including the gasification, quench/cooling, and Rectisol sections. Therefore, this section is the source of several significant by-product streams.

In the tar/oil separation section a series of phase separators are used to isolate heavy tar, light tar, and medium oil from the incoming condensate streams. These organic fractions are all sent to storage. Process condensate (phenolic water) is sent to the Phenosolvan section for further treatment.

Major waste streams produced in the tar/oil separation section include:

- a sludge consisting of a combination of a heavy tar and dust (which is landfilled),

- gases that are released from a series of depressurization vessels and then collected and incinerated, and

- vent gases from a series of atmospheric-pressure surge tanks that are vented directly to the atmosphere.

Figure 2-7 shows a process flow diagram for the tar/oil separation section and indicates the sources of these waste streams. A detailed listing of the major by-product and waste streams leaving this section is contained in Table 2-5.

2.6 Phenosolvan Section

The Phenosolvan section accomplishes three distinct functions:

- residual tar and oil removal,

- ammonia (NH_3) stripping, and

- phenol extraction.

Residual tars and oils entering the Phenosolvan unit with the inlet wastewater are removed in a storage tank/gravity separator and a series of sand filters. The phenolic water is then heated and fed to two degasing columns where dissolved gases such as NH_3, CO_2 and H_2S are steam stripped from the water. According to the plant design, by-product NH_4OH was to be recovered at this point. However, during the Phase I test program, all stripper vent gases were being released directly to the atmosphere.

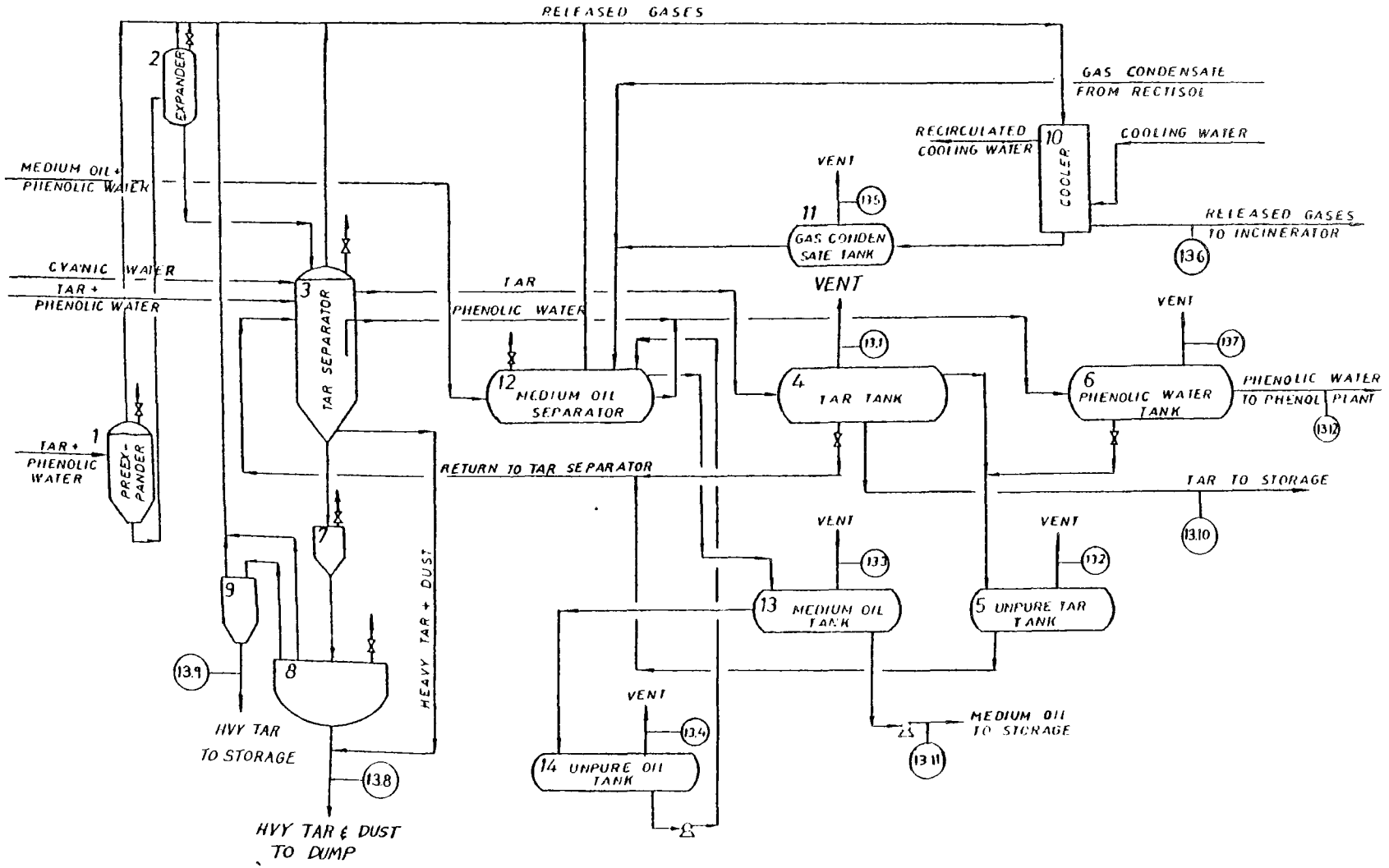

Figure 2-7. Process Flow Diagram Showing Sampling Points in Kosovo Plant Tar/Oil Separation Section

TABLE 2-5. SIGNIFICANT KOSOVO PLANT TAR SEPARATION SECTION PROCESS AND EMISSION STREAMS

Stream[1] Number	Stream Description	Stream[2] Type	Design or[3,4] Estimated Flow Rate	Measured[3,5] Flow Rate (Phase I)	Comments
13.1	Tar tank vent	G	>.4 Nm^3/hr (e)	.5 Nm^3/hr (C3)	Intermittent flow. This tank is filled and emptied on a batch basis.
13.2	Slop tank (tar) vent	G	Negligible	NM	This tank is not normally in service.
13.3	Medium oil tank vent	G	>.25 Nm^3/hr (e)	17 Nm^3/hr (C3)	** Significant emission stream **
13.4	Slop tank (medium oil) vent	G	Negligible	NM	This tank is not normally in service
13.5	Condensate tank vent	G	Unknown	1 Nm^3/hr (C3)	
13.6	Expansion gases (to main flare)	G	26 Nm^3/hr (d)	NM	
13.7	Phenolic water tank vent	G	>13 Nm^3/hr (e)	13 Nm^3/hr (C3)	** Significant emission stream **
13.8	Heavy tar and dust	L/S	.1 MT/hr (d)	NM	
13.9	Heavy tar	L	.4 MT/hr (d)	NM	
13.10	Light tar	L			
13.11	Medium oil	L	.25 MT/hr (d)	NM	
13.12	Phenolic water to phenosolvan	L	13 m^3/hr (d)	NM	

[1]Stream locations are shown in Figure 2-7.

[2]G - gaseous; L - liquid; S - solid.

[3]All flow rates normalized to a one-gasifier-in-service basis.

[4](d) - design; (e) - estimated.

[5]NM - not measured; (C3) - measured during Campaign 3.

The phenolic water from the bottom of the first degasing column is run through a series of heat exchangers and columns where it comes in contact with diisopropylether (DIPE). Plant design dictates that treated wastewater from the Phenosolvan unit be sent to a biological wastewater treatment plant for further processing. However, this unit was not in service during the Phase I test period. Phenol-rich DIPE is thermally regenerated. The "lean" DIPE is recycled to the extraction section while the raw phenol is routed to by-product storage.

Figure 2-8 shows a process flow diagram for the Phenosolvan section. Major process and emission streams found in this section are listed in Table 2-6.

2.7 By-Product Storage Section

As shown in Figure 2-9, the by-product storage section consists of a series of liquid product storage tanks and a pumping station. Each tank is equipped with a vent line which exhausts directly to the atmosphere. The vents having the greatest potential for emissions are the gasoline, medium oil, and raw phenol tank vents. Sample point designations for gaseous, liquid and solid waste streams generated in the by-product storage section are summarized in Table 2-7.

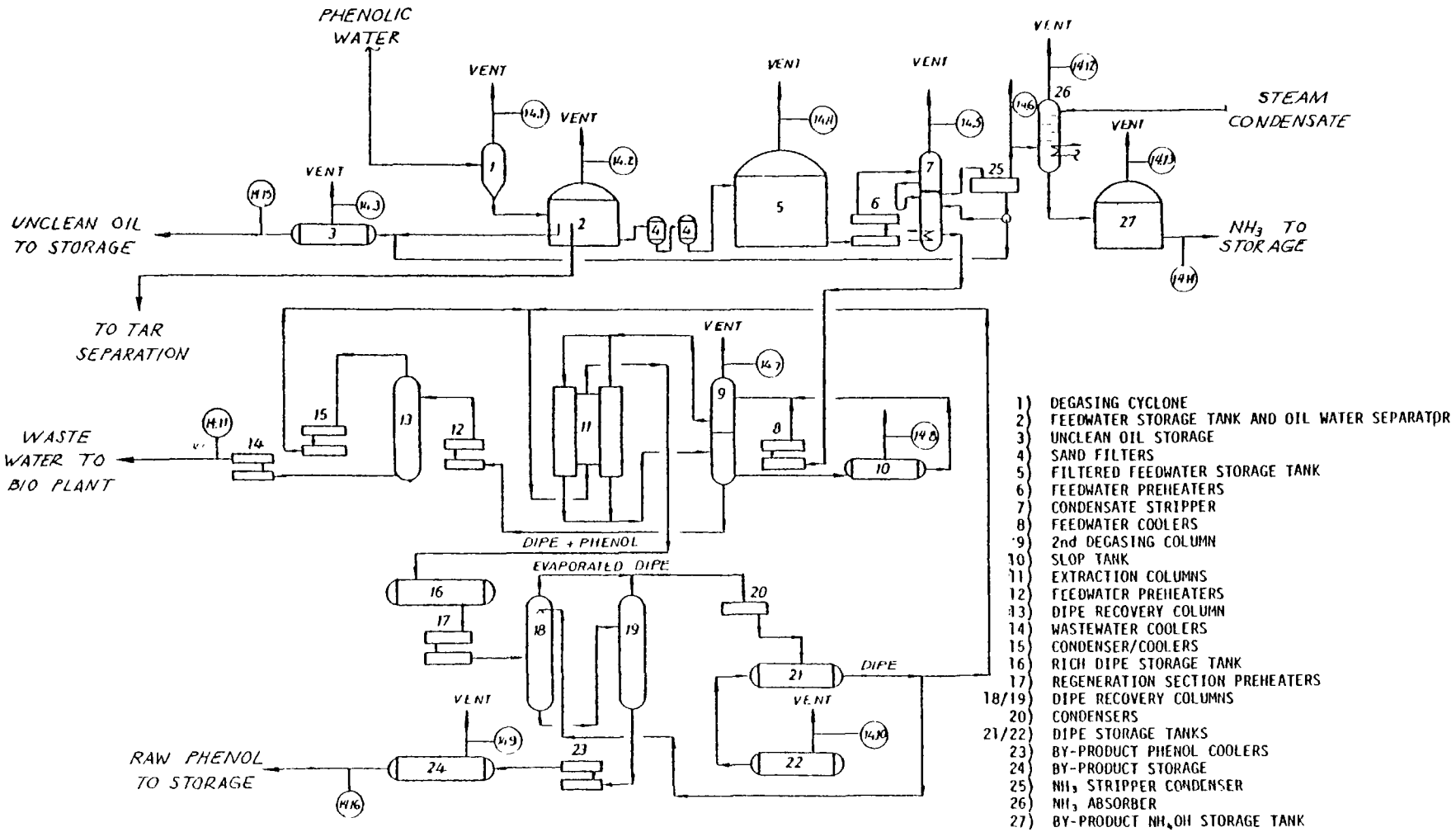

Figure 2-8. Process Flow Diagram Showing Sampling Points in Kosovo Plant Phenosolvan Section

TABLE 2-6. SIGNIFICANT KOSOVO PLANT PHENOSOLVAN SECTION PROCESS AND EMISSIONS STREAMS

Stream[1] Number	Stream Description	Stream[2] Type	Design or[3,4] Estimated Flow Rate	Measured[3,5] Flow Rate (Phase I)	Comments
14.0	Phenosolvan inlet water	L	13 m^3/hr (d)	NM	
14.1	Cyclone (C1) vent	G	2 Nm^3/hr (d)	NM	
14.2	Phenolic water tank (T2) vent	G	Unknown	NM	
14.3	Unclean oil tank (T3) vent	G	Unknown	NM	
14.4	Filtered water tank (T5) vent	G	Unknown	NM	
14.5	Degasing column (C7) vent	G	9 Nm^3/hr (e)	60-150 Nm^3/hr (C3)	
14.6	NH_3 stripper cooler (E25) vent	G	4 Nm^3/hr (e)	NM	
14.7	2nd degasing column (C9) vent	G	.4 Nm^3/hr (e)	NM	
14.8	Slop tank (T10) vent	G	Unknown	NM	
14.9	Phenol storage tank (T24) vent	G	.08 Nm^3/hr	.08-.24 Nm^3/hr (C3)	
14.10	DIPE tank (T22) vent	G	.5 Nm^3/hr (e)	NM	
14.11	Treated wastewater	L	13 m^3/hr (d)	NM	
14.12	NH_3 absorber (C26) vent	G	Unknown	NM	NH_3 recovery system not in operation during Phase I testing
14.13	NH_3 storage tank (T27) vent	G	Unknown	NM	
14.14	NH_4OH product to storage	L	.2 MT/hr (d)	NM	
14.15	Unclean oil to storage	L	.03 MT/hr (d)	NM	
14.16	Raw phenols to storage	L	.09 MT/hr (d)	NM	

[1]Stream locations are shown in Figure 2-8.

[2]G - gaseous; L - liquid.

[3]All flow rates normalized to a one-gasifier-in-service basis.

[4](d) - design; (e) - estimated.

[5]All flow rates are expressed on a dry gas (moisture free) basis; (C3) - measured during Campaign 3.

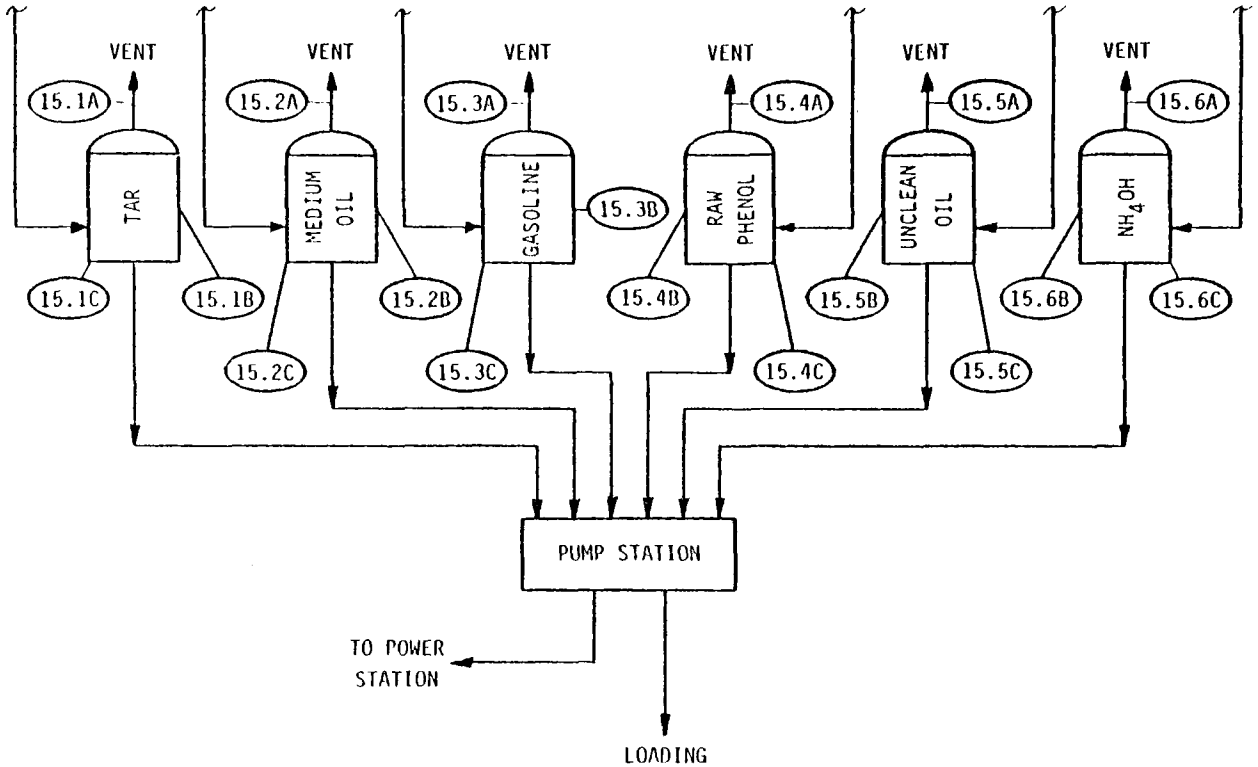

LEGEND

A - VENT GAS

B - LIQUID IN TANK

C - SLUDGE

FIGURE 2-9. PROCESS FLOW DIAGRAM SHOWING SAMPLING POINTS IN KOSOVO BY-PRODUCTS STORAGE AREA

TABLE 2-7. SIGNIFICANT KOSOVO PLANT BY-PRODUCT STORAGE SECTION PROCESS AND EMISSION STREAMS

Stream[1] Number	Stream Description	Stream[3] Type	Design or[4,5] Estimated Flow Rate	Measured[4,6] Flow Rate (Phase I)	Comments
15.1 A/B/C[2]	Tar tank	G/L/S	.5 Nm^3/hr	NM	Based upon visual observation the gasoline tank is clearly the most significant emission source among this group of tanks
15.2 A/B/C[2]	Medium oil tank	G/L/S	.25 Nm^3/hr	NM	
15.3 A/B/C[2]	Gasoline tank	G/L/S	.13 Nm^3/hr	.03 Nm^3/hr (C3)	
15.4 A/B/C[2]	Raw phenol tank	G/L/S	.08 Nm^3/hr	NM	
15.5 A/B/C[2]	Unclean oil tank	G/L/S	.03 Nm^3/hr	NM	
15.6 A/B/C[2]	NH_4OH tank	G/L/S	.2 Nm^3/hr	NM	Tank not in service

[1]Stream locations are shown in Figure 2-9.

[2]A - vent gas; B - liquid in tank; C - sludge in bottom of tank.

[3]G - gaseous; L - liquid; S - solid.

[4]All flow rates normalized to a one-gasifier-in-service basis.

[5]Tank vent flows assumed equal to the volume displaced by normal process stream flow.

[6]NM - not measured; (C3) - measured during Campaign 3.

2.8 Auxiliaries

The only other Kosovo plant waste stream characterized in the Phase I test program was the combined waste gas to the main plant flare (sample point 20.1). This stream was sampled as part of Phase I primarily because this sample point was easily accessible and its location permitted making reasonably accurate flow measurements. This combination of factors was not found at any of the other sampling points used to sample the individual streams that are sent to the flare (gasifier high pressure vent, Rectisol H_2S rich vent, and tar/oil separator high pressure vent).

3.0 SAMPLING PROCEDURES

The sampling procedures for Phase I are outlined in this section. Standard EPA-approved sampling practices were followed in most instances. Some sampling modifications occurred due to a better understanding of sampling problems gained after each of the three Campaigns in Phase I. Several of the improved sampling procedures were incorporated during Phase I (Phase I testing lasted over a year). All deviations from standard practices are discussed in this section.

Table 3-1 contains a list of components sampled and the sampling procedures used during Phase I. The sampling methods can be separated into the following categories:

- flow rates,
- gases analyzed by wet chemical methods (bubbler method or ORSAT),
- gases analyzed by gas chromatographic techniques,
- particulates,
- waste water samples, and
- solid samples.

A discussion of the details of the gas sampling procedures, flow rate determinations, particulate sampling procedures, and their deviations from standard procedures follows.

TABLE 3-1. SAMPLING PROCEDURES

Component	Sampling Method
Gas Streams	
Flow Rate	See discussion in text
Fixed Gases (H_2, O_2, N_2, CH_4, CO, CO_2)	A. ORSAT (Campaign 1 and 2) B. Perma pure drier; collection in silanized glass bulb (See text)
Hydrocarbons (C_1 - C_6)	Perma pure drier; collection in silanized glass bulb
Sulfur Species (H_2S, COS, SO_2, MeSH[a], EtSH[b])	Perma pure drier; collection in silanized glass bulb
Particulate	EPA Method 5 train with filter or impingers (See text)
Phenols	Bubblers with NaOH solution
Ammonia	Bubblers with H_2SO_4 solution
HCN	Bubblers with NaOH solution
H_2S	Bubblers or glass bomb - cadmium acetate solution
Moisture	EPA Method 5 train
Wastewaters	
All Species	All determinations were made on samples collected in glass bottles with teflon-lined caps
Solid Samples	
Moisture	Grab sample (Composite)
Ash Content	Grab sample (Composite)
Phenols [(1) total and (2) volatile]	Water filtrate
Elemental Analysis (C, H, O, N, S)	Grab sample (Composite) (1) Dried material at 105°C (2) Ash at 850°C
COD	Grab sample (Composite)

[a] methyl mercaptans
[b] ethyl mercaptans

3.1 Flow Measurement Procedures

Traverses across at least one axis of the flowing stream using an S-type pitot tube were used to determine flow rate according to the EPA Method 2 procedure for the following four streams:

- 2.2 Coal Bunker Vent Gases,
- 7.1 H_2S-Rich Gases,
- 7.2 CO_2-Rich Gases, and
- 14.5 Phenosolvan Stripper Vent.

For gas streams with flows showing high variability with time, centerline velocity measurements were made using an S-type pitot tube. The resultant flow signal was monitored over an extended period of time and an estimated "average" flow rate value was calculated by integration over the period of measurement. Streams monitored in this manner were:

- 3.2 Low Pressure Coal Lock Vent,
- 3.5 Ash Lock Vent,
- 3.6 High Pressure Coal Lock Vent, and
- 20.1 Waste Gases to Flare.

Surge tanks were equipped with vent pipes mounted as shown in Figure 3-1.

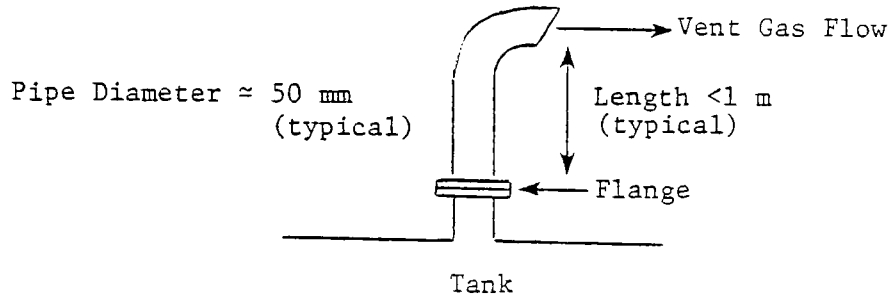

Figure 3-1. Typical Surge Tank Vent Pipe Arrangement

High velocity gas flows were estimated from velocity pressure head readings using a standard pitot inserted into the throat of the vent pipe (see Figure 3-2). Vent streams measured using this approach included:

- 13.1 Tar Tank Vent,
- 13.3 Medium Oil Tank Vent, and
- 13.6 Phenolic Water Tank Vent.

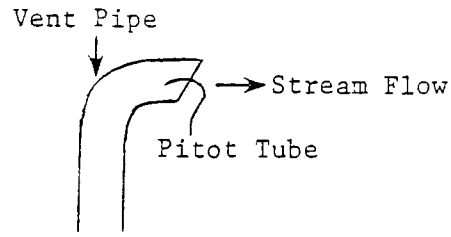

Figure 3-2. Flow Measurement Approach For High Velocity Tank Vents

Low velocity vent gas flows were measured using an anemometer and flow tube, as shown in Figure 3-3.

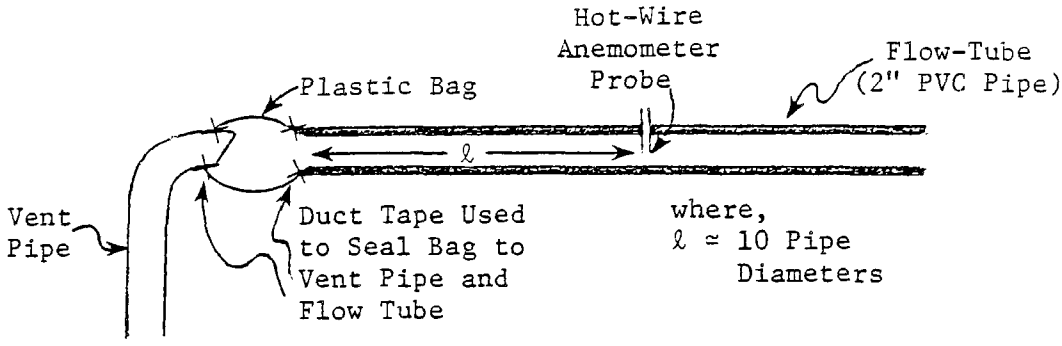

Figure 3-3. Flow Measurement Approach for Low Velocity Tank Vent Flows

Vent streams measured using this approach included:

- 14.9 Phenol Tank Vent
- 15.3A Gasoline Tank Vent

3.2 Particulates

The particulate concentration in the gas streams was determined by one of two methods, depending on moisture content of the stream. The standard EPA Method 5 technique, utilizing a glass fiber filter heated to at least 110 °C, was usable only with relatively dry streams (e.g., stream 2.2). For sampling of gas streams with high moisture content, an impinger technique was developed. Two Smith-Greenberg impingers, each containing 200ml of deionized water, were followed by two modified Smith-Greenbergs, one dry and one containing indicating silica gel. During sampling, all impingers were kept in an ice bath. This technique was used at points 3.2, 3.5 and 3.6. Following sampling, the impinger solutions were filtered through glass fiber filters and the suspended solids were determined gravimetrically. An aliquot of the solution

was evaporated to dryness to determine dissolved solids and a second aliquot was extracted with methylene chloride. The methylene chloride extract was then evaporated to dryness and the residue weighed to determine extractable organics. The reported particulate loading is based on the sum of suspended and dissolved solids.

Moisture content of the gas streams was determined from the weight gain of the impingers, for both the Method 5 and impinger techniques. Sample gas volumes were measured with a dry gas meter and corrected to standard conditions.

3.3 Gas Sampling For Wet Chemical Analysis

Phenols, ammonia, hydrogen cyanide and hydrogen sulfide were collected from the gas streams by sorption using two fritted glass bubblers connected in series. Sample gas volumes were measured with a wet test meter. Separate sampling was conducted for each species using the following sorption solutions:

- Phenols - 5% NaOH
- Ammonia - 5% H_2SO_4
- Hydrogen Cyanide - 10% NaOH
- Hydrogen Sulfide - 4% $Cd(OAc)_2$

In addition, an alternative method for hydrogen sulfide was used during Campaigns 1 and 2 and part of Campaign 3. An ∿1200ml sample bomb was purged with a minimum of ten bomb volumes of sample and then sealed at atmospheric pressure by

closing ground glass stopcocks on each end. Hydrogen sulfide in the captured gas sample was recovered by injecting successive 50ml aliquots of cadmium acetate solution into the bomb, shaking the bomb, and draining the solution. Sorption solution injections were repeated until no yellow cadmium sulfide precipitate was evident. The bomb was then rinsed with distilled water and the rinse and all sorption solution aliquots were combined for analysis. This technique was found to give results comparable to gas chromatography except for those instances when moisture condensed in the bomb during sampling.

3.4 Grab Gas Samples for Gas Chromatography

Gas samples for gas chromatographic determination of fixed gases, C_1-C_6 hydrocarbons and sulfur species were collected in 125ml and 250ml glass bombs with teflon stopcocks on each end. Teflon tubing was used to transport the gas to a sample conditioning assembly. For samples with high moisture content, the teflon tubing was heated to avoid condensation. The sample conditioning assembly consisted of a heated teflon filter for particulate removal, a Perma-Pure® drier, and a teflon-lined pump. The Perma-Pure® drier consists of an extruded permeation tube which removes water vapor by selective permeation across the tubing wall. A dry air stream flows countercurrent to the sample stream on the opposite side of the tubing wall. Driving force for the permeation is provided by the moisture differential between the sample stream and the dry air stream. Dry air was provided by passing ambient air through a column of Drierite® and activated charcoal. Dry air and sample gas flow were monitored with rotometers. A 0 - 1 x 10^5Pa gauge at the pump outlet measured sample bomb pressure.

A gas sample was collected by first purging the system with sample gas and then attaching a clean sample bomb to the

pump outlet. Between each use, sample bombs were cleaned by filling with distilled water to force out all residual gas and then purging with dry nitrogen until dry. During sample collection, the bombs were purged with a minimum of ten volumes of sample and the exit stopcock was closed. When the pressure inside the bomb reached $\sim 6.9 \times 10^4$ Pa, the inlet was closed and the bomb was detached from the pump outlet. Immediately following collection, the samples were transported to the laboratory for analysis. Sample collection was performed at least in duplicate. Sampling was repeated if leakage was apparent, either from a loss of bomb pressure or the presence of oxygen (from the fixed gas analysis) in gas streams where oxygen would not be expected.

4.0 ANALYTICAL METHODOLOGY

The analytical methodology for Phase I is outlined in this section. The methodology includes standard EPA methods, ASTM methods, DIN (German Institute for Standardization e. v.) methods and Russian Unified Methods of water analysis.

The analytical procedures are classified according to sample type:

- gases,
- waste waters, and
- solids.

The procedures for the various sample types are listed in Tables 4-1 through 4-3. The discussion deals primarily with deviations from the standard methods.

4.1 Analytical Methods for Gases

Both wet chemical and gas chromatographic methods were used for the analysis of gases. Table 4-1 contains a list of all gaseous species determined in Phase I, along with the applicable analytical methods used and a brief description of the standard methods and references.

All methods followed the standard procedures except the gas chromatographic method for analyzing sulfur species. The major changes for this analysis were the column and supply system for the standards. The column used was a 3m (10 ft by 2mm (0.8 in.) ID teflon tubing packed with 1% TCEP and 0.5%

TABLE 4-1. ANALYTICAL PROCEDURES FOR GASES

Component	Method	Description	References
Gas Streams			
Flow Rate	EPA Method 2 (Most Instances)	Type S Pitot Tube Method	Environmental Reporter, (Ref. 1) October 21, 1977, P. 65-75
Fixed Gases (H_2, O_2, N_2, CH_4, CO, CO_2)	A. "ORSAT" (Campaign 1 and 2) B. EPA Screening Methods	A. "ORSAT" Wet Chemical Methods B. Gas Chromatographic Method Using a Thermal Conductivity Detector	A. "ORSAT" B. "Level 1" Manual (Ref. 2)
Hydrocarbons (C_1- C_4)	EPA Screening Methods	Gas Chromatographic Method Using a Flame Ionization Detector	Ref. 2
Sulfur Species (H_2S, COS, SO_2, Mesh, ETSH)	Modified EPA Screening Methods	Gas Chromatographic Method Using A Flame Photometric Detector	Ref. 2 (See Text for Modification).
Particulates	EPA Method 5 or Gravimetry for TSS and TDS	Weigh particulates caught on a glass fiber filter or filter and weigh from impinger catch	Ref. 1, P. 83-89 (See Text in Sampling Section)
Phenols	ASTM 510A, 510B and 510C	Spectrophotometric with 4-amino-antipyrine Dye	Standard Methods for the Examination of Water and Waste water, 14th Edition (Ref. 3)
Ammonia	ASTM 418A, 418D	Distillation of ammonia into boric acid solution with back titration	Ref. 3 (418A, 418D)
HCN	ASTM 413A, 413C	Distillation followed by silver nitrate titration	Ref. 3 (413A, 413C)
H_2S	DIN Waste Water Method G-3 (Same as EPA Method 11)	Iodometric titration of CdS precipitate	Deutsche Einheitsuerfahren zur Wasser Untersuchung (3rd Edition, 1975) (G-3) (Ref. 4)
Moisture	EPA Method 4	Cold plus silica gel impingers weight gain	Ref. 1 (pp 80-84)

TABLE 4-2. ANALYTICAL PROCEDURES FOR WASTE WATERS

Component	Method	Description	References
Waste Waters			
NH_3 (free)	ASTM 418A, 418D	Distillation into boric acid followed by back titration	Ref. 3 (418A, 418D)
NH_3 (bound)	DIN Waste Water Method E-5 (Same as ASTM 421 and 418D)	Kjeldahl reaction plus as above for free NH_3	Ref. 4 (E-5)
H_2S	DIN Waste Water Method G-3 (Same as EPA Method 11)	Iodometric titration of CdS precipitate	Ref. 4 (G-3)
F^-	ASTM 414A, 414C	Distillation followed by colorimetric determination using SPADNS reagent	Ref. 3 (414A, 414C)
Cl^-	DIN Waste Water Method D-1 (Same as ASTM 408A or 408B)	Titration with mercuric or silver nitrate	Ref. 4 (D-1)
NO_3^-	DIN Waste Water Method D-9 (Same as ASTM 419E)	Colorimetric method using chromotropic acid	Ref. 4 (D-9)
NO_2^-	DIN Waste Water Method D-10 (Same as ASTM 420)	Colorimetric method using sulfanilic acid and naphthylamine hydrochloride	Ref. 4 (D-10)
COD	ASTM 508	Reflux with $K_2Cr_2O_7$ and H_2SO_4 and back titrate with $Fe(NH_4)_2(SO_4)_2$	Ref. 3 (508)
Permanganate	DIN Waste Water Method H-4	Acidic and basic reflux with $KMnO_4$, add excess oxalic acid and titrate with $KMnO_4$	Ref. 4 (H-4)
Phenols (volatile)	ASTM, 510A, 510B and 510C	Spectrophotometric with 4-amino antipyrine	Ref. 3 (510A, B and C)
Phenols (non-volatile)	DIN Waste Water Method H-16	Extraction, convert to phenolates and titration using iodine	Ref. 4 (H-16)
Tars and Oils	Russian Unified Methods - Tar	Ether extraction between pH 3 and 4 followed by evaporation and weighing (See text)	Unified Method of Water Analysis (LU-096), Edited by Yu. Luve, "Khimiya", Moscow (Ref. 5)
Dry Solids	ASTM 208		Ref. 3 (208)
TS (Total Solids)		Dry to constant weight at 105°C	
TDS (Total Dissolved Solids)		Filter before drying filtrate	
TSS (Total Suspended Solids)		Filter before drying precipitate	
pH Value	ASTM 424	Electrometrically using a glass-reference electrode pair	Ref. 3 (424)
Sulfates	ASTM 427C	Turbidimetric (Not Used)	Ref. 3 (427C)
Thiosulfates	Russian Unified Methods - Thiosulfates	Iodometric titration	Ref. 5 (Thiosulfates)
Rhodanate (CNS^-)	Russian Unified Methods - Rhodanate	Colorimetric determination using pyridine and barbituric acid	Ref. 5 (Rhodanate)

TABLE 4-3. ANALYTICAL PROCEDURES FOR SOLIDS

Component	Method	Description	References
Solid Samples			
Moisture	ASTM D3173	Dry to constant weight at 105°C	Annual Book of ASTM Standards; Part 26 Gaseous Fuels: Coal and Coke; Atmospheric Analysis; D3173
Ash Content	ASTM 208	Heat at 550°C to constant weight	Ref. 3 (208)
Phenols Total Volatile	See Waste Waters DIN Method H-16 ASTM 510A, 510B and 510C	Extraction of solid with acidified water then treat as waste water sample	Ref. 3 (510A, B, C) Ref. 4 (H-16)
Elemental Analysis (C, H, O, N, S)	Standard Ultimate Analysis	Determination of combustion products	
COD	See Waste Waters	Slurry small amount of sample	Ref. 3 (508)

H_3PO_4 on 60/80 mesh Carbopak B. The gas chromatographic oven program was comprised of an initial hold for 4 minutes at 40°C, heating at a rate of 16°C/minute to 110°C, and a hold for 5 minutes. Gas calibration standards were produced using certified permeation tubes in a thermostated oven (Metronics Dynacalibrator Model 230).

4.2 Analytical Methods for Waste Waters

Table 4-2 contains a list of all water quality measurements made in Phase I along with the applicable standard methods, and a brief description of the methods and references.

In cases where particulates, tars, oils and water were mixed, the method for tars and oils varied from the Russian Unified Method. In these instances, the water was extracted with methylene chloride and the two layers were separated. The aqueous layer and then the methylene chloride layer were filtered through medium filter paper. The particulates stayed on the filter paper and any tars and oils passed through with the methylene chloride. The weight of the residue left after evaporation of the methylene chloride at room temperature represented the weight of tars and oils in the sample.

4.3 Analytical Methods for Solids

The analytical procedures for the solids followed standard methods in Phase I. The methods along with a brief description and references are listed in Table 4-3. No deviations from standard methods were necessary.

5.0 RESULTS AND RECOMMENDATIONS

One of the major objectives of Phase I testing at the Kosovo facility was the identification of potentially harmful waste streams associated with a Lurgi gasification plant and the prioritization of control needs for those streams. The identification was made in accordance with the EPA's Source Analysis Model/1A (SAM/1A) which enabled prioritization of the control needs according to the discharge severity associated with the streams. These data provide reasonable bases for identifying and prioritizing potential sources of environmental problems associated with a Lurgi plant. However, the data are not intended to exactly define the environmental impacts of plants designed for construction and operation in the U.S.

The data that were collected during Phase I testing reveal a high degree of variability. Two factors contribute heavily to that variability:

- variation in plant operation as experienced during the test periods, and

- variation in the characteristics of the lignite that was used as the gasification feedstock.

The Kosovo gasification facility is operated as a peaking rather than a base load unit. As a result, gas production is varied to meet the demand and likewise, conditions in the gasifier can vary significantly with time.

Analysis performed on the lignite feedstock during the test period revealed variation in several critical parameters (Figure 5-1). The differences seen in heat value (HV),

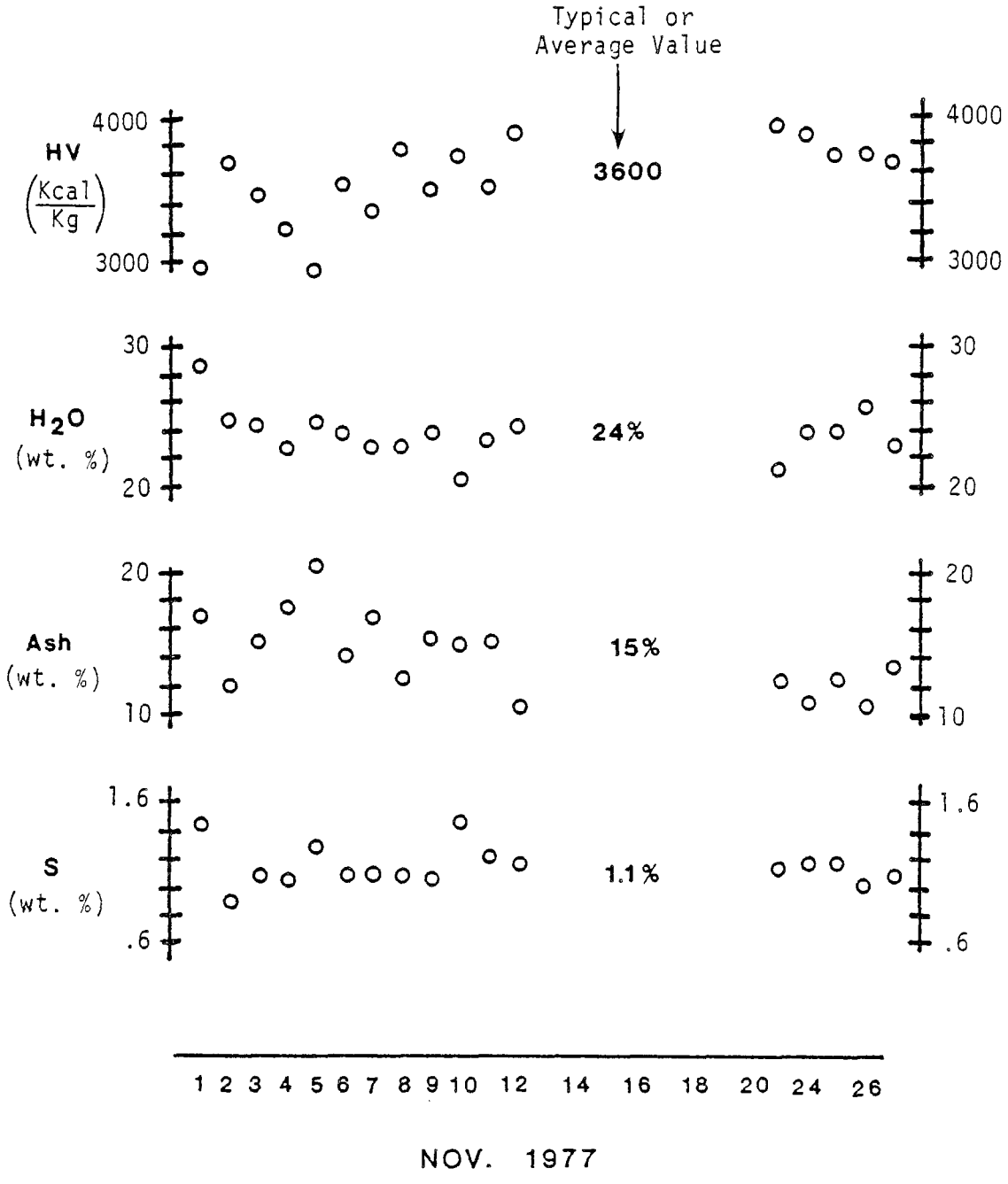

Figure 5-1. Kosovo Lignite Data Gathered During Campaign I

moisture content, ash and sulfur can be significant contributors to the variations found in the test data. Problems similar to those experienced during Phase I testing often necessitate acceptance of single point samples from streams having flow, temperature, pressure and composition characteristics that changed with time. In spite of the variation problems, the point values measured are reasonably valid indicators of the stream's characteristics. In addition, as testing progressed sampling and analytical procedures were refined such that the impact of process variability on sample validity was less severe in the latter stages of Phase I.

Based on the EPA SAM/1A method for prioritizing pollutants, the data from Phase I testing indicates the following:

- Of the components measured, benzene presents the most significant potential for adverse health effects.

- Mercaptans present a potential for adverse health effects comparable to benzene and greater than H_2S.

- Of the fixed gases measured, CO is the most significant pollutant.

- Of the two nitrogen species measured, NH_3 appears to present a greater potential for adverse health effects than does HCN.

- Organic loading (COD) in the major aqueous waste stream from the Kosovo plant (Phenosolvan effluent) is substantial, despite

the effective removal of phenols by the process.

- Sulphur species in the liquid by-products is more concentrated in the "lighter" fractions. Therefore, the heavier hydrocarbons might be used to satisfy on-site fuel needs with little resultant impact on SO_2 emission levels.

5.1 Gaseous Emissions

A SAM/1A analysis (Ref. 2) was used as a basis for prioritizing both the atmospheric emission streams and the individual components present in those streams. SAM/1A is the simplest member of the Source Analysis Models (SAM's) which are being developed under the direction of the Energy Assessment and Control Division of EPA's Industrial Environmental Research Laboratory at Research Triangle Park, NC. Basically, the SAM/1A analysis involves comparing measured emission stream pollutant concentrations with concentration values for those pollutants which may cause adverse health and/or ecological effects. The "target" values which are used for this analysis are referred to as Multimedia Environmental Goals (MEG). A discussion of the procedures used to establish specific MEG values for the compounds addressed in this program is contained in Reference 3.

The SAM/1A methodology was developed to provide a rapid screening technique for identifying potentially harmful waste streams and prioritizing waste streams for more detailed analysis. Major assumptions implicit in the use of the SAM/1A methodology are as follows:

- The components currently included in the MEG's are the only species that must be addressed at this time.

- Transport of waste stream components to the external environment occurs without chemical or physical transformation of those components.

- Actual dispersion of a pollutant from a source to a receptor will be equal to, or greater than, the safety factors normally applied to acute toxicity data to convert those data to estimated safe chronic exposure levels.

- The MEG values (Ref. 3) developed for each substance are adequate for estimating acute toxicity.

- No synergistic effects occur among the waste stream components.

These assumptions, along with the accuracy of the test data and the basic assumptions used in developing specific MEG values, must be considered when interpreting test results using a SAM/1A analysis scheme.

The following procedure was used in performing a SAM/1A analysis of the Kosovo test data:

1) Concentrations of major and minor components of each stream sampled were determined.

2) Health and ecological MEG values were obtained from Reference 3 for each compound identified. Discharge MEG (DMEG) and Ambient MEG (AMEG) values were considered.

3) Health and ecological discharge severity (DS) values were calculated for the compounds found in each waste stream. The following equation defines DS for component "i":

$$(DS)_i \equiv (dc)_i/(DMEG)_i$$

where dc_i = measured concentration of component "i" in stream.

$DMEG_i$ = Discharge MEG value for component "i" obtained from the MEG's data base (Ref. 3). Separate health and ecological values are listed.

4) Total stream DS's (TDS's) were calculated by summing the DS values for individual compounds.

5) Total stream weighted discharge severities (TWDS's) were calculated for each stream by multiplying the TDS by the appropriate stream flow rate.

The resulting TWDS's for each stream were used to prioritize the emission streams of major concern. DS values were used to prioritize individual stream components or component classes to determine needs for more detailed analysis.

DMEG values for the specific gaseous species measured in the Phase I test program are listed in Table 5-1. From this table, it can be seen that the most toxic ambient pollutants addressed in the Phase I test program, from a health-effect point of view, were benzene and methyl and ethyl mercaptans. C_2 hydrocarbons (as ethylene) and NH_3 represented the compounds that may have the most harmful ecological effects at low concentration levels.

Potential health-related (based upon health DMEG's) discharge severity values for the high priority emission streams identified in Section 2.0 are shown in Table 5-2. Ecology-based DS calculations are presented in Table 5-3. The analytical data used to support these calculations are given in Table 5-4. The data presented in Tables 5-2 through 5-4 support the conclusions stated in Section 5.0.

While the data presented in Tables 5-2 through 5-4 show some interesting trends, several factors limit the extent to which these data can be used to draw firm conclusions about the environmental impacts of the process. Some of these factors are:

- Most of the data presented in Table 5-4 are based on single point measurements and therefore are not representative of mean operating conditions encountered during normal plant operation.

- Other components not analyzed as part of Phase I (e.g., polynuclear aromatics) may have a significant effect on final DS and TWDS values, thereby changing the indicated priorities.

TABLE 5-1. DMEG VALUES FOR GASEOUS SPECIES MEASURED IN KOSOVO STREAMS

	Component	Health DMEG Value ($\mu g/m^3$)	Basis	Ecology DMEG Value ($\mu g/m^3$)	Basis
Fixed Gases	H_2	NA	-	NA	-
	O_2	NA	-	NA	-
	CH_4	3.3×10^5	Asphyxiant	NA	-
	CO	4.0×10^4	Asphyxiant	1.2×10^5	Plants (Tomato)
	CO_2	9.0×10^6	Asphyxiant	NA	-
Hydrocarbons	C_2's	6.1×10^6	Asphyxiant	1.0	Plants (All)
	C_3's	9.0×10^6	Asphyxiant	NA	-
	C_4's	1.4×10^6	Asphyxiant	NA	-
	C_5's	1.8×10^6	Asphyxiant	NA	-
	C_6's	3.6×10^5	Asphyxiant	NA	-
	Benzene	3.0×10^3	Toxic	NA	-
	Toluene	3.8×10^5	Toxic	NA	-
Sulfur Species and Other	H_2S	1.5×10^4	Toxic	NA	-
	COS	4.4×10^5	Toxic	NA	-
	CH_3SH	1.0×10^3	Toxic	NA	-
	C_2H_5SH	1.0×10^3	Toxic	NA	-
	NH_3	1.8×10^4	Irritant	3.5×10^2	Plants (Mustard)
	HCN	1.1×10^4	Toxic	3.4×10^4	Plants (Orange Trees)
	Phenol	1.9×10^4	Toxic	NA	-

NA - Not available

TABLE 5-2. HEALTH-BASED DS, TDS, AND TWDS VALUES FOR KOSOVO "HIGH PRIORITY" ATMOSPHERIC EMISSIONS STREAMS[a]

	3.2 Lock Hopper Vent Gases Low Pressure	3.6 Lock Hopper Vent Gases High Pressure	13.1 Tar Tank Vent	13.3 Medium Oil Tank Vent	13.6 Tar Separation Expn. Gases	13.7 Phen. H_2O Tank Vent	14.5 Stripper Vent	7.1 H_2S Vent	7.2 CO_2 Vent	7.3 Rectisol Inlet Gas
Fixed Gases (DS)										
H_2	-	-	-	-	-	-	-	-	-	-
O_2	-	-	-	-	-	-	-	-	-	-
N_2	-	-	-	-	-	-	-	-	-	-
CH_4	200	240	2.2	170	130	4.3	TR	91	20	280
CO	2900	4100	NF	NF	2300	NF	NF	810	NF	4100
CO_2	91	80	7.0	190	160	63	72	190	200	72
Hydrocarbons (DS)										
C_2	1.6	1.6	TR	1.3	0.9	TR	TR	0.7	0.7	1.5
C_3	0.7	0.4	TR	0.4	0.7	TR	TR	0.4	0.7	0.9
C_4	1.9	0.4	TR	3.7	5.6	TR	TR	1.9	TR	3.7
C_5	0.9	0.4	TR	1.8	3.6	TR	TR	1.8	TR	0.7
C_6	3.2	1.1	TR	11.0	11.0	TR	NF	1.1	NF	2.1
Benzene	2300	-	4700	5800	12,000	19,000	NF	-	-	700
Toluene	-	-	1.1	22	43	65	NF	-	-	-
Sulfur Species (DS)										
H_2S	71	110	190	1300	1200	190	760	2300	0.5	470
COS	1.1	1.9	NF	<2.5	-	NF	NF	3.5	NF	0.5
CH_3SH	590	910	1400	2200	2100	1500	330	9300	18	1200
C_2H_5SH	250	750	690	1300	810	1200	83	2100	9.7	280
Other										
NH_3	290	NF	110	-	830	510	2900	94	0.2	0.2
HCN	5.3	19	14	-	7.5	4.2	130	9.1	1.4	6.6
TDS[b]	6700	6200	7100	11,000	20,000	23,000	4300	15,000	250	7100
Stream Flow Rate (Nm^3/hr)	40	400	2	50	26	40	400	2500	5000	-
TWDS (Nm^3/hr)[c]	2.7E5	2.5E6	1.4E4	5.5E5	5.1E5	9.0E5	1.7E6	3.7E7	1.3E6	

[a]Calculations are based upon composition data presented in Table 5-4 and DMEG values listed in Table 5-1.

[b]TDS = $\sum_{i=1}^{\text{All Components}} (DS)_i$

[c]TWDS = TDS · Flow Rate (AEB = A x 10^B)

NF = Not Found

TR = Trace

TABLE 5-3. ECOLOGY-BASED DS VALUES FOR KOSOVO "HIGH PRIORITY" ATMOSPHERIC EMISSION STREAMS[a]

Compound	3.2 Lock Hopper Vent Gases Low Pressure	3.6 Lock Hopper Vent Gases High Pressure	13.1 Tar Tank Vent	13.3 Medium Oil Tank Vent	13.6 Tar Separation Expn. Gases	13.7 Phen. H_2O Tank Vent	14.5 Stripper Vent	7.1 H_2S Vent	7.2 CO_2 Vent	7.3 Rectisol Inlet Gas
CO	970	1400	NF	NF	750	NF	NF	270	NF	1400
C_2	7,500,000	7,500,000	TR	6,400,000	4,300,000	TR	TR	3,200,000	3,200,000	7,500,000
NH_3	15,000	NF	5700	-	43,000	26,000	150,000	4900	11	8.6
HCN	1.7	6.2	4.5	-	2.4	1.4	41	2.9	0.44	2.1

[a]Calculations are based upon composition data presented in Table 5-4 and DMEG values listed in Table 5-1.

NF: Not found

TR: Trace

TABLE 5-4. ANALYTICAL DATA FOR KOSOVO "HIGH PRIORITY" GASEOUS EMISSION STREAMS SAMPLED DURING PHASE I

Compound	3.2 Lock Hopper Vent Gases Low Pressure	3.6 Lock Hopper Vent Gases High Pressure	13.1 Tar Tank Vent	13.3 Medium Oil Tank Vent	13.6 Tar Separation Expn. Gases	13.7 Phen. H_2O Tank Vent	14.5 Stripper Vent	7.1 H_2S Vent	7.2 CO_2 Vent	7.3 Rectisol Inlet Gas
Fixed Gases (Vol. %)										
H_2	34.0	32.0	TR	NF	11.0	TR	NF	-	0.8	36.1
O_2	0.7	0.2	21.0	0.9	0.5	13.0	9.0	0.5	0.1	0.6
N_2	2.5	6.1	76.0	3.4	0.6	53.0	58.0	1.4	0.3	1.6
CH_4	9.4	11.0	0.1	7.6	6.1	0.2	TR	4.2	0.9	13.0
CO	9.3	13.0	NF	NF	7.2	NF	NF	2.6	NF	13.0
CO_2	42.0	37.0	3.2	86.0	72.0	29.0	32.0	86.0	94.0	33.0
Hydrocarbons (Vol. %)										
C_2	0.7	0.7	TR	0.6	0.4	TR	TR	0.3	0.3	0.7
C_3	0.3	0.2	TR	0.2	0.3	TR	TR	0.2	0.3	0.4
C_4	0.1	0.02	TR	0.2	0.3	TR	TR	0.1	TR	0.2
C_5	0.05	0.02	TR	0.1	0.2	TR	TR	0.1	TR	0.04
C_6	0.03	0.01	TR	0.1	0.1	TR	NF	0.01	NF	0.02
Benzene	0.2	-	0.4	0.5	1.0	1.6	NF	-	-	0.06
Toluene	-	-	0.01	0.2	0.4	0.6	NF	-	-	-
Sulfur Species (ppm)										
H_2S	700	1100	1900	13,000	12,000	1900	7500	23,000	4.6	4700
COS	170	300	NF	<400	-	NF	NF	<560	0.5	80
CH_3SH	270	420	630	1000	950	680	150	4300	8.5	570
C_2H_5SH	90	270	250	480	290	420	30	740	3.5	100
Others (g/100 Nm^3)										
NH_3	530	NF	198	-	1500	920	5300	170	0.4	0.3
HCN	5.8	21	15.3	-	8.2	4.6	140	10	1.5	7.3

Data from Campaign Three Test; November 1978

- No information could be gathered on the effects of normal variability or variability due to abnormal, upset, or startup and shutdown conditions.

In spite of these limitations, the Kosovo Phase I test data provide a reasonable definition of the scope and magnitude of the atmospheric emission problems which will need to be addressed in a U.S. Lurgi plant. The results also provide strong justification for continued testing at Kosovo.

5.2 Liquid Effluents, Liquid By-Products and Solid Wastes

During Phase I, the liquid and solid wastes from the Kosovo facility were not generally examined to the same degree of detail as were the air emissions. Nevertheless, some useful data on these streams were gathered.

A summary of the major Kosovo plant liquid effluent, liquid by-product and solid waste streams is presented in Table 5-5. Also indicated in the table are the liquid and solid streams that were studied in Phase I and those that will be studied in Phase II.

The major aqueous waste stream at Kosovo is the Phenosolvan effluent water stream. According to the plant design, this stream is to be treated in a biological oxidation process, but this system was not in operation at the time of testing.

Preliminary data obtained from a series of source screening samples indicate that the Phenosolvan unit at Kosovo is effective in recovering the phenols present in the raw process gas liquor. However, as the data in Table 5-6 indicate the organic loading in the effluent water from the Phenosolvan unit is still substantial. The indicated phenol concentration is not sufficient to account for the COD value obtained for that stream. It is expected that the organic characterization work scheduled for Phase II will identify more specifically the potential environmental problems and control needs associated with the Phenosolvan effluent water stream.

TABLE 5-5. MAJOR SOURCES OF LIQUID EFFLUENTS, LIQUID BY-PRODUCTS AND SOLID WASTES AT THE KOSOVO PLANT

	Approximate Flow*	Studied In Phase I	To Be Studied in Phase II
Aqueous Wastes			
Phenosolvan Effluent	13 MT/hr	x	x
Fleissner Condensate	Unknown		x
Generator Section Wastewater	3 MT/hr	x	x
Liquid By-Products			
Tars, Oils, Gasoline	0.8 MT/hr	x	x
Phenols	0.1 MT/hr		
NH_4OH	0.2 MT/hr		
Solid Wastes			
Gasifier Ash	2.7 MT/hr	x	x
Heavy Tar & Dust	0.1 MT/hr	x	x
Other Process Residues	Unknown		x (By-Product Storage Residues)

*Design values; normalized to a one-gasifier-in-service basis.

TABLE 5-6. KOSOVO WASTEWATER PROPERTIES (PHASE I DATA)

	Phenosolvan Effluent Water	Gasifier Section Wastewater	Units
pH	9.2-9.4	11.4-12.1	mg/ℓ
Susp. Solids	150-190	180-590	mg/ℓ
Diss. Solids	880-1300	1100-2100	mg/ℓ
COD ($K_2Cr_2O_7$)	3100-3300	.8-150	mg O_2/ℓ
Phenols	170-270	-	mg/ℓ
CN^-	.02	.01 Max.	mg/ℓ
Cl^-	16-120	20-70	mg/ℓ
$SO_4^=$	100-110	320-670	mg/ℓ
CNS^-	3	.01-.03	mg/ℓ
F^-	Trace	.6-1.2	mg/ℓ
NO_3^-	11-12	4-6	mg/ℓ

As shown previously (See Figure 2-5), the gasification section wastewater stream is a composite stream. It consists primarily of ash quench water. However, small quantities of coal bunker and ash lock vent gas scrubber blowdown liquid are also discharged in this stream. This stream has a relatively high pH because of the highly alkaline nature of the Kosovo ash (See Table 5-6).

A limited amount of data on the liquid by-product streams was gathered during the Phase I test period. These data are presented in Table 5-7.

One of the major points to be noted is that the sulfur contents of the liquid by-products become progressively higher in the "lighter" fractions. These data indicate that heavy hydrocarbon by-products similar to those generated at Kosovo might be used to satisfy on-site fuel needs of Lurgi plants operated in the U.S.

The bulk of the work necessary to characterize the liquid and solid wastes associated with the Kosovo plant will be performed as part of the Phase II program. The program will include the quantification of trace and minor components present in all significant liquid and solid waste streams. Particular attention will be directed to the leachable species in the solid waste streams and soluble components in liquid effluents.

TABLE 5-7. KOSOVO LIQUID BY-PRODUCT DATA

	Feed Coal (Dry)	Heavy Tar + Dust	Tar	Medium Oil	Gasoline
C		56.0	81.9	81.2	85.7
H		7.6	8.4	8.9	9.8
N		0.87	1.3	1.0	0.2
S	1.1	0.33	0.49	0.71	2.2
Ash		6.6	0.22	0.03	-
O		28.6	7.8	8.2	2.1
HV*	21.6	26.5	37.3	38.3	41.6
SO_2**	510	120	130	190	530

*HV = Heat value expressed as KJ/g.

**Expressed as ng/J assuming 100% conversion of S to SO_2.

SO_2 Emission Limitations for Utility Steam Generators (Ref. 4)

Solid Fuels 86-520 ng/J (0.2-1.2 lb/10^6 Btu)

Liquid Fuels 340 Ng/J (0.8 lb/10^6 Btu)

5.3 Mass Balances

To determine the correlation between design and experimental data, a series of mass balance calculations were performed on the Kosovo gasification system. The first effort involved a component balance around a single gasifier. The second effort involved a sulfur balance which encompassed the gasification, quench/cooling, tar/oil separation, Rectisol and Phenosolvan sections. The primary bases used for these calculations were the operational data obtained during the three sampling campaigns. In cases where critical data gaps existed, design data were used.

A number of assumptions were made in the execution of mass balance calculations. The assumptions made and a summary of the calculated results are presented in Appendix C.

Table 5-8 contains a summary of the results of mass balance calculations normalized to a single Kosovo gasifier in operation. A summary of the results of sulfur mass balance calculations is given in Table 5-9.

An examination of the tables shows that reasonable accountability was observed for all of the major components considered. The number of assumptions necessary to these calculations limits the usefulness of the results. Nevertheless, the results imply that no serious errors exist in any of the data used in the calculations.

TABLE 5-8. MASS BALANCE ACROSS THE LURGI GASIFIER AT KOSOVO *

Component	Input (kg/hr)	Output (kg/hr)	Percent Accountability
S	179	140.5	78.5
C	6500	7091	109
H	2354	2635.9	112
N	442.5	367	86.8
O	19,189	22,446.8	117

*Mass balances are normalized to one gasifier in operation.

TABLE 5-9. SULFUR BALANCE ACROSS LURGI GASIFICATION FACILITY AT KOSOVO

Section(s)	Input (kg/hr)	Output (kg/hr)	Percent Accountability
Gasification, Quench, Cooling And Tar Separation	142	128.9	91
Rectisol	114	92	81
Phenosolvan	*	3.3	*

* - Flow rate and composition unknown. This stream will be sampled during Phase II.

5.4 Discussion of Results and Recommendations for Future Testing

Based upon the results of the Phase I test program, it is recommended that future testing at the Kosovo facility focus on the following areas:

- more comprehensive characterization of solid and liquid waste streams,
- detailed analyses for trace organic and trace elements in high priority waste streams, and
- evaluations of control options for high priority waste streams.

The specific nature of the data needed in each of these areas is summarized in Table 5-10.

During Phase I, the solid and liquid waste streams from the Kosovo plant generally were not examined to the same degree of detail as were the gaseous streams. In Phase II, the solid and liquid streams which have the potential for causing significant environmental problems will be evaluated.

Gasifier ash should be carefully evaluated with respect to recently published RCRA guidelines (Ref. 5). This attention is justified primarily by the size of this stream (2.7 MT/hr of dry ash from each Kosovo gasifier.)

TABLE 5-10. KOSOVO WASTE STREAMS GENERAL SUMMARY OF ADDITIONAL DATA NEEDS

Stream Type	Stream Description	Flow Rate[1]	Data Needs
1. Solid Wastes	Gasifier Ash	2.7 MT/hr	Additional physical and chemical characterization data[2] Leachability data (RCRA screening) to establish the potential toxicity and status of ash (will it be classified as a hazardous waste?)
	Heavy Tar & Dust	0.1 MT/hr	Same as for ash except also evaluate the environmental impacts of disposal options other than landfill (e.g., incineration)
	By-Product Storage Residues	Unknown	
2. Liquid Wastes	Process Condensate:		
	Fleissner	Unknown	Additional physical and chemical characterization data[2] Evaluate treatment, reuse, disposal options
	Phenosolvan	13 MT/hr	
	Ash Quench Water	3 MT/hr	
3. Liquid By-Products	Tars/Oils/Gasoline	0.8 MT/hr	Additional physical and chemical characterization data[2] Evaluate utilization options
	Phenols	0.1 MT/hr	
	NH_4OH	0.2 MT/hr	
4. Rectisol Process Vent Gases	H_2S-Rich Flash Gases	2500 Nm^3/hr	Additional physical and chemical characterization data[2] Assess needs/options for further treatment
	CO_2-Rich Vent	2200 Nm^3/hr	
5. Raw Generator Vent Gases	Coal Lock System Vents	400 Nm^3/hr	Additional physical and chemical characterization data[2] Assess collection and treatment options
	Generator Start-Up Vent	Unknown	
6. Rich Expansion Gases	Drying:		
	Fleissner Autoclave Vent	Unknown	Need comprehensive physical and chemical data for screening purposes
	Gasification:		
	Liquor Tank Vent	40 Nm^3/hr	
	Tar Separation:		
	Separator Flash Gases	26 Nm^3/hr	Additional physical and chemical characterization data[2] Assess collection and treatment options
	Tank Vents	~20 Nm^3/hr	
	Phenosolvan:		
	Stripper Vents	~100 Nm^3/hr	
7. Storage Tank Vents	All Liquid By-Products	Small compared to streams listed under item 6	Additional physical and chemical characterization data[2] Assess collection and treatment options
8. Air and O_2-Rich Vents with Particulates	Coal Handling System Vents:		Additional physical and chemical characterization data with emphasis on particulates. Other components of potential interest include: Coal Devolatilization Products
	Fleissner	Unknown	
	Coal Handling, Crushing, Sizing	Unknown	
	Gasification	3600 Nm^3/hr	Raw gas components?
	Ash Lock System Vent	28 Nm^3/hr	Additional physical and chemical characterization data with emphasis on particulates

[1]Per gasifier.

[2]With emphasis on components not adequately addressed in the Phase I program (e.g., trace organics and trace elements). Attention should also be focused on the variability of key stream flow rates and pollutant concentrations during periods of normal operation as well as during startup/shutdown and upset periods.

Heavy tar and dust as well as a variety of other solid process residues are currently landfilled at Kosovo. Because these streams probably contain significant quantities of harmful organic components, landfill would not be environmentally acceptable in the U.S. Combustion of these residues in an incinerator or process heater to recover the energy available in the combustible residues is one control option. The acceptability of this approach must be confirmed with respect to the fates of hazardous trace species during combustion.

Additional data needed to properly characterize the Kosovo liquid by-products closely parallels that outlined for combustible solid residues. One of the more promising disposal options for some of these materials is combustion in on-site steam generators, but the fate of hazardous trace species during combustion of the liquid by-products is of concern. Therefore, emphasis in Phase II should be placed upon characterizing liquid by-products.

The Kosovo Rectisol unit should receive considerable attention in the Phase II program. Since this unit is the source of two of the plant's most significant gaseous waste streams its operation is critical to the overall air quality impact of the plant. The presence of residual sulfur species and light hydrocarbons in the CO_2-rich vent stream is of particular concern. This stream may be the source of significant hazardous pollutant emissions from the plant, particularly during upset conditions.

The H_2S-rich gas stream from the Kosovo Rectisol unit should be examined in detail during Phase II. Emphasis should be directed toward components such as COS, mercaptans, and light hydrocarbons which might cause problems in a downstream sulfur recovery process.

Several significant gaseous emission sources identified in the Phase I program should be studied further during Phase II. The most significant sources are the Phenosolvan condensate stripper vents, the surge tank vents in the tar separation section, and the lock hopper vent gases.

REFERENCES

1. Lentzen, D. E., D. E. Wagoner, E. D. Estes, and W. F. Gutknecht, IERL-RTP Procedures Manual: Level I Environmental Assessment (Second Edition). EPA-600-7-78-201. Research Triangle Institute, Research Triangle Park, NC, October 1978.

2. Schalit, L. M. and K. J. Wolfe, SAM/1A: A Rapid Screening Method for Environmental Assessment of Fossil Energy Process Effluents. EPA-600-7-78-015. Acurex Corporation/Energy and Environmental Division, Mountain View, CA, February 1978.

3. Cleland, J. G. and G. L. Kingsbury, Multimedia Environmental Goals for Environmental Assessment, Volumes I and II. EPA-600-7-77-136a & b. RTI, Research Triangle Park, NC, November 1977.

4. Environmental Protection Agency, Standards of Performance for Electric Utility Steam Generating Units for Which Construction is Commenced After September 18, 1978. (40 CFR 60.432) Revised as of July 1, 1979.

5. Environmental Protection Agency, Hazardous Waste: Proposed Guidelines and Regulations and Proposal on Identification and Listing. (40 CFR 250) Federal Register, Volume 43, No. 243, Monday, December 18, 1978.

6. Šalja, Bećir, Mira Mitrović, and Dragon Petković, Environmental and Engineering Evaluation of Kosovo Coal Gasification Plant, Yugoslavia (Phase I), Symposium on Environmental Aspects of Fuel Conversion Technology, IV, Hollywood, Florida, April 17-20, 1979.

APPENDICES

APPENDIX A
PHASE I DATA SUMMARY TABLES FOR GASES

The following tables contain summaries of the raw Phase I test data as reported by Rudarski Institute. Comments related to data quality which are based upon Radian's observations of the plant's operation are also included.

GENERAL NOTES ON ESTIMATED DETECTION LIMITS OF SAMPLING/ANALYTICAL METHODS

Fixed Gases

NF - not found; <0.1 vol. % (Orsat)
<0.01 vol. % (GC)

T - trace; ∿0.1 vol. % (Orsat)
∿0.01 vol. % (GC)

Hydrocarbons

NF - not found; <1 ppm (.0001 vol. %)

T - trace; ∿1 ppm

Sulfur Species

NF - not found; <0.1 ppm

T - trace; ∿0.1 ppm

Impinger Measurements

H_2S	NF - not found; <1 ppm T - trace; ∿1 ppm
NH_3	NF - not found; <1 ppm T - trace; ∿1 ppm
HCN	NF - not found; <1 ppm T - trace; ∿1 ppm
Phenol	NF - not found; <1 ppm T - trace; ∿1 ppm

PHASE I TEST DATA FOR SAMPLE POINT 2.2

		Campaign I			Campaign II					Campaign III	COMMENTS/NOTES
		RI	RI	Kosovo		RI	Kosovo	RI	Kosovo		
Date		Sept 1977	Nov 3 1977	Nov 10 1977	June 29 1978	July 1978		Sept 1978		Nov 22 1978	
Flow Rate, Nm^3/hr					71,000					21,000	Apparent difference in measured flow in Campaign II vs. Campaign III cannot be explained.
Particulate, g/Nm^3					0.046					0.039	
Moisture, % Volume										2.4	
Temperature, °C					14					10	
	Method	Orsat	Orsat	Orsat						GC	
FIXED GASES - % VOLUME	H_2	NF	0.8							NF	This sample should consist primarily of air with minor amounts of raw gas components possibly being present.
	O_2	20.4	20.4							20.8	
	N_2	79.4	78.7							78.2	
	CH_4									NF	
	CO	NF	NF							NF	
	CO_2									NF	
	Acid Gases	T	0.1	NF							
	Sat. HC	0.3	NF								
	Unsat. HC	NF	NF	NF							
HYDROCARBONS - % VOLUME (GC)	C_2									NF	
	C_3									NF	
	C_4									NF	
	C_5									NF	
	C_6										
	C_{6+}									NF	
	Benzene										
	Toluene										
SULFUR SPECIES ppmv (GC)	H_2S									NF	These measurements will be repeated in Phase II since H_2S detection here is probably the most sensitive indicator of raw gas leakage.
	COS									NF	
	CH_3SH									NF	
	C_2H_5SH									NF	
	SO_x										
IMPINGERS - ppmv	H_2S		NF			NF	NF	NF	NF	NF	
	NH_3					10.5	9.2	30	29	NF	
	HCN									NF	
	Phenol					T	T				

PHASE I TEST DATA FOR SAMPLE POINT 3.1

		Campaign I	COMMENTS/NOTES
		RI	
Date		Sept 1977	
Flow Rate, Nm^3/hr Particulate, g/Nm^3 Moisture, % Volume Temperature, °C			Sampling impossible in Campaigns II and III due to blocked vent. This vent normally plugs very quickly with tars and coal dust after it is cleaned. Accordingly, it does not represent a very significant emission source.
	Method	Orsat	
FIXED GASES - % VOLUME	H_2	1.8	
	O_2	17.6	
	N_2	76.8	
	CH_4		
	CO	0.6	
	CO_2		
	Acid Gases	2.6	
	Sat. HC	0.6	
	Unsat. HC	NF	
HYDROCARBONS - % VOLUME (GC)	C_2		
	C_3		
	C_4		
	C_5		
	C_6		
	C_{6+}		
	Benzene		
	Toluene		
SULFUR SPECIES ppmv (GC)	H_2S		
	COS		
	CH_3SH		
	C_2H_5SH		
	SO_x		
IMPINGERS - ppmv	H_2S		
	NH_3		
	HCN		
	Phenol		

PHASE I TEST DATA FOR SAMPLE POINT 3.2

		Campaign I							Campaign II					Campaign III			COMMENTS/ NOTES
		RI	RI	RI	RI	Kosovo	RI	Kosovo	INEP	RI	Kosovo	RI	Kosovo				
Date		Sept 1977	Nov 1 1977	Nov 3 1977	Nov 10 1977		Nov 11 1977			July 1978		Sept 1978		Nov 19 1978	Nov 20 1978	Nov 24 1978	
Flow Rate, Nm^3/hr																	
Particulate, g/Nm^3																12.6	
Moisture, % Volume																8.1	
Temperature, °C																	
	Method	Orsat	Orsat	Orsat												GC	
FIXED GASES - % VOLUME	H_2	14.2	16.8	28.4												34.1	Campaign III Sample appears to be the most representative
	O_2	12.9	11.4	5.8	← Air Leakage ?											0.70	
	N_2	50.8	44.2	25.4	←											2.54	
	CH_4															9.38	
	CO	4.0	3.8	5.6												9.26	
	CO_2															42.0	
	Acid Gases	13.5	17.8	26.2		29.8											
	Sat. HC	4.6	5.6	8.2													
	Unsat. HC	NF	0.4	0.4		0.4											
HYDROCARBONS - % VOLUME (GC)	C_2								0.79							0.72	
	C_3								0.32							0.29	
	C_4								0.16							0.09	
	C_5								0.03							0.05	
	C_6								0.02								
	C_{6+}															0.03	
	Benzene																
	Toluene																
SULFUR SPECIES ppmv (GC)	H_2S															704	
	COS															173	
	CH_3SH															266	
	C_2H_5SH															88	Unknown #1 (as C_2H_5SH) ~13 ppmv
	SO_x															-	
IMPINGERS - ppmv	H_2S	440		6600				1800		2100	2000	3400 6200	3300 2900			3800	
	NH_3						1700	920		190	180	290	290			7000	
	HCN															48	
	Phenol				57	77	5.4	3.4		1.4	T	-	-				

PHASE I TEST DATA FOR SAMPLE POINT 3.4

		Campaign I					COMMENTS/NOTES
		RI	RI	RI	Kosovo	Kosovo	
Date		Nov 1 1977	Nov 3 1977	Nov 10 1977		Dec 1977	
Flow Rate, Nm^3/hr							
Particulate, g/Nm^3							
Moisture, % Volume							
Temperature, °C							
	Method		Orsat		Orsat		
FIXED GASES - % VOLUME	H_2		11.8				
	O_2		13.8				← sample contaminated
	N_2		55.6				← by air ?
	CH_4						
	CO		2.6				
	CO_2						
	Acid Gases		12.6		10.2		
	Sat. HC		3.0				
	Unsat. HC		0.6		0.4		
HYDROCARBONS - % VOLUME (GC)	C_2						
	C_3						
	C_4						
	C_5						
	C_6						
	C_{6+}						
	Benzene						
	Toluene						
SULFUR SPECIES ppmv (GC)	H_2S						
	COS						
	CH_3SH						
	C_2H_5SH						
	SO_x						
IMPINGERS - ppmv	H_2S	1600	1300			320	
	NH_3			690		99	
	HCN						
	Phenol			T		9.5	

PHASE I TEST DATA FOR SAMPLE POINT 3.5

		Campaign I						Campaign II						Campaign III			COMMENTS/NOTES
		RI	RI	RI	RI	Kosovo	Kosovo		INEP	RI	Kosovo	RI	Kosovo				
Date		Sept 1977	Nov 1 1977	Nov 3 1977	Nov 11 1977		Dec 1977	Jun 27 1978		July 1978		Sept 1978		Nov 16 1978	Nov 19 1978	Nov 19 1978	
Flow Rate, Nm^3/hr															7.1[1]		[1] Dry Gas Flow per gasifier
Particulate, g/Nm^3								1.11							10.6[2]	5.2[3]	[2] Method 5
Moisture, % Volume								81.4							91.3	96.8	[3] Wet impinger
Temperature, °C								90								98	
	Method	Orsat	Orsat	Orsat		Orsat			GC						GC		
FIXED GASES - % VOLUME	H_2	NF	NF	1.0											NF		This sample should be very O_2-rich. Campaign III Analysis looks more reasonable.
	O_2	20.6	20.5	22.8	←	looks like		→	18.9						48.0		
	N_2	79.0	79.3	75.8	←	mostly air		→	79.4						35.3		
	CH_4														T		
	CO	NF	NF	NF											NF		
	CO_2								1.2						14.0		
	Acid Gases	0.4	0.2	NF		NF											
	Sat. HC	NF	NF	0.4													
	Unsat. HC	NF	NF	NF		0.5											
HYDROCARBONS - % VOLUME (GC)	C_2								0.004						T		
	C_3														T		
	C_4														T		
	C_5														T		
	C_6																
	C_{6+}														NF		
	Benzene																
	Toluene																
SULFUR SPECIES ppmv (GC)	H_2S														NF		
	COS														NF		
	CH_3SH														NF		
	C_2H_5SH														NF		
	SO_x																
IMPINGERS - ppmv	H_2S	NF	NF	NF			NF			66	63	NF	NF	82			
	NH_3				7.5		46			300	300	130	130	340			
	HCN													54			
	Phenol				NF		16			T	11						

PHASE I TEST DATA FOR SAMPLE POINT 3.6

		Campaign I							Campaign II						Campaign III	COMMENTS / NOTES
		RI	RI	RI	RI	RI	Kosovo	Kosovo		INEP	RI	Kosovo	RI	Kosovo		
Date		Sept 1977	Nov 1 1977	Nov 3 1977	Nov 11 1977	Nov 25 1977		Dec 1977			July 1978		Sept 1978		Nov 20 1978	
Flow Rate, Nm^3/hr															400[1]	[1] Dry gas flow per gasifier
Particulate, g/Nm^3									0.19						1.15[2] / 0.62[2]	[2] Wet impinger collection
Moisture, % Volume															11.1	
Temperature, °C									60						54	
	Method	Orsat	Orsat	Orsat			Orsat			GC					GC	
FIXED GASES - % VOLUME	H_2	2.4	4.4	37.0-37.2						16.7					31.6	
	O_2	0.2	0.4	0.2-0.3						7.8 ←	air contamination				0.23	
	N_2	3.2	3.6	4.8-11.7						30.8 ←					6.07	
	CH_4									4.8					11.0	
	CO	1.0	3.4	8.0-12.0						4.0					12.7	
	CO_2									26.6					37.3	
	Acid Gases	84.8	85.6	34.8-39.4			32.4									
	Sat. HC	8.2	2.6	2.9-9.6												
	Unsat. HC	0.2	NF	0.9-1.2			0.6			4.8						
HYDROCARBONS - % VOLUME (GC)	C_2									2.7					0.71	
	C_3									6.2					0.21	
	C_4									0.08					0.02	
	C_5									0.20					0.02	
	C_6									0.09					0.01	
	C_{6+}														0.05	
	Benzene															
	Toluene															
SULFUR SPECIES ppmv (GC)	H_2S														1060	Unknown #1 (as C_2H_5SH) -13 ppmv
	COS														300	
	CH_3SH														420	
	C_2H_5SH														270	Unknown #2 (as C_2H_5SH) -21 ppm
	SO_x															
IMPINGERS - ppmv	H_2S	12000	12000	2800 2400				360			1500	1500	3200	3200	2400	
	NH_3				340			650			76	72	130	130	NF	
	HCN														170	
	Phenol					NF		50				1.1	2.5			

PHASE I TEST DATA FOR SAMPLE POINT 7.1

		Campaign I				Campaign II			Campaign II	Comments/Notes
		RI	RI	Kosovo	Kosovo	INEP	RI	Kosovo	II	
Date		Sept 1977	Nov 24 1977		Dec 24 1977	June 30 1978			Nov 24 1978	
Flow Rate, Nm^3/hr									3729	Pitot may have been plugged; 3 generators in service.
Particulate, g/Nm^3										
Moisture, % Volume									(<1.3)	(Estimated)
Temperature, °C									12	
	Method	ORSAT		ORSAT		GC			GC	
FIXED GASES - % VOLUME	H_2	1.6				0.07			-	
	O_2	NF				0.23			0.51	
	N_2	0.2				0.59			1.39	
	CH_4					<.2			4.15	
	CO	1.8				1.6			2.63	
	CO_2					91.5			86.3	
	Acid Gases	87.0		72.2						
	Sat. HC	8.6								
	Unsat. HC	0.2		1.3						
HYDROCARBONS - % VOLUME (GC)	C_2					1.53			0.34	
	C_3					1.06			0.22	
	C_4					0.58			0.14	
	C_5					0.07			0.06	
	C_6					0.03			0.01	
	C_{6+}									
	Benzene									
	Toluene									
SULFUR SPECIES ppmv (GC)	H_2S								6300 to 10100	
	COS								4562	
	CH_3SH								3640 to 4970	
	C_2H_5SH								739	
	SO_x									
IMPINGERS - ppmv	H_2S	10 000		3600			27 000	27 000	23 000	
	NH_3		11	NF			NF	NF	2200	
	HCN								73	
	Phenol		NF		NF		NF	NF		

PHASE I TEST DATA FOR SAMPLE POINT 7.2

		CAMPAIGN I						CAMPAIGN II			CAMPAIGN III	COMMENTS/ NOTES
		RI										
		1	2	3	RI	KOSOVO	KOSOVO	NEP	RI	KOSOVO		
Date		Sept 1977			Nov 24 1977		Dec 24 1977	July 1 1978			Nov 25 1978	
Flow Rate, Nm^3/hr									3165'		14086'	3 generators in service
Particulate, g/Nm^3												
Moisture, % Volume											(<0.4)	(estimated)
Temperature, °C									19			
	Method	Orsat	Orsat	Orsat		Orsat		GC			GC	
FIXED GASES - % VOLUME	H_2		NF					NF			0.8	
	O_2		0.3	NF				0.58			T	
	N_2		1.4					1.7			0.32	
	CH_4							1.8			0.94	
	CO		NF					NF			—	
	CO_2							94.6			94.1	
	Acid Gases	95.8	87.7	97.0		92.5						
	Sat. HC		9.4	3.4								
	Unsat. HC		NF	NF		0.7						
HYDROCARBONS - % VOLUME (GC)	C_2							2.19			0.29	
	C_3							0.55			0.26	
	C_4							NF			T	
	C_5							NF			T	
	C_6							NF			NF	
	C_{6+}										NF	
	Benzene											
	Toluene											
SULFUR SPECIES ppmv (GC)	H_2S							139 / 170			46	
	COS										T	
	CH_3SH										8.5	
	C_2H_5SH										3.5	Unknown #1 (as H_2S) - 4.2 ppmv
	SO_x											
IMPINGERS - ppmv	H_2S			140		NF			90.1 / NF	NF	39	
	NH_3				NF	NF			NF	NF	46	
	HCN										13	
	Phenol				NF		NF		NF	NF		

PHASE I TEST DATA FOR SAMPLE POINT 7.3

		Campaign I	Campaign II			Campaign III	COMMENTS/NOTES
			INEP	RI	Kosovo		
Date						Nov 24 1978	
Flow Rate, Nm^3/hr		No measurements or determinations completed on this point					
Particulate, g/Nm^3							
Moisture, % Volume						(< 2.0)	(estimated)
Temperature, °C						20	
	Method			Orsat		GC	
FIXED GASES - % VOLUME	H_2			39.8		36.1	
	O_2			0.2		0.55	
	N_2			0.9		1.55	
	CH_4					12.8	
	CO			11.6		13.5	
	CO_2					33.4	
	Acid Gases			37.2			
	Sat. HC			9.9			
	Unsat. HC			0.4			
HYDROCARBONS - % VOLUME (GC)	C_2		1.04			0.65	
	C_3		0.35			0.35	
	C_4		0.20			0.15	
	C_5		0.02			0.04	
	C_6					0.02	
	C_{6+}					-	
	Benzene						
	Toluene						
SULFUR SPECIES ppmv (GC)	H_2S					4670	
	COS						
	CH_3SH					566	
	C_2H_5SH						
	SO_x						
IMPINGERS - ppmv	H_2S			7800	6900	4400	
	NH_3			2.7	NF	3.3	
	HCN					60	
	Phenol			T	T		

PHASE I TEST DATA FOR SAMPLE POINT 7.4

		Campaign I						Campaign II			Campaign III				COMMENTS / NOTES
		Kosovo	Kosovo	Kosovo	Kosovo	Kosovo	Kosovo	INEP	RI	Kosovo					
Date		Nov 1 1977	Nov 3 1977		Nov 9 1977	Nov 10 1977	Nov 11 1977				Nov 16 1978	Nov 19 1978		Nov 24 1978	
Flow Rate, Nm^3/hr															
Particulate, g/Nm^3															
Moisture, % Volume															
Temperature, °C															
	Method	Orsat	Orsat	Orsat	Orsat	Orsat	Orsat	GC	Orsat		GC	GC	GC	GC	
FIXED GASES - % VOLUME	H_2	66.3	66.5	66.1	66.5	65.0	65.9	63.4	62.4		60.1	63.2	63.9	62.2	
	O_2	0.1	0.1	0.1	0.1	0.2	0.2	1.6	0.1		0.60	1.4	1.73	0.1	
	N_2	1.2	1.0	1.5	0.5	1.5	0.9	2.6	0.9		4.64	6.77	5.87	2.0	
	CH_4							15.7			12.9	12.3	11.9	17.6	
	CO	15.5	16.5	16.5	16.9	16.5	16.9	13.2	17.3		18.8	15.9	14.33	17.1	
	CO_2							2.4				NF	NF	0.7	
	Acid Gases	3.0	1.6	2.0	2.1	2.8	2.4		2.8						
	Sat. HC	13.6	14.0	13.5	13.6	13.7	13.7		16.1						
	Unsat. HC	0.3	0.3	0.3	0.3	0.3	0.3		0.4						
HYDROCARBONS - % VOLUME (GC)	C_2							0.45			T	0.42	0.75	0.79	
	C_3							0.09			T	0.005	0.004	0.02	
	C_4							NF			NF	NF	NF	T	
	C_5							NF			NF	NF	NF	T	
	C_6							NF			NF	NF	0.02		
	C_{6+}										NF	0.02	0.03		
	Benzene														
	Toluene														
SULFUR SPECIES ppmv (GC)	H_2S							110			T	1.2	2.0	1.4	
	COS										NF	NF	NF	NF	
	CH_3SH										T	T	T	1.0	
	C_2H_5SH										T	T	T	T	
	SO_x								NF	NF					
IMPINGERS - ppmv	H_2S								NF	NF					
	NH_3								NF	NF					
	HCN														
	Phenol								NF	NF					

PHASE I TEST DATA FOR SAMPLE POINT 13 1

		CAMPAIGN I				CAMPAIGN I		CAMPAIGN III	COMMENTS/NOTES
		RI	RI	Kosovo	Kosovo	RI	Kosovo		
Date		SEPT 1977	NOV 22 1977		DEC 1977	JUNE 1978		NOV 23, 1978	
Flow Rate, Nm^3/hr								1.4[1]	[1] 0.74 Nm^3/min DURING FILLING, FILLING FOR 1 MIN EACH HOUR
Particulate, g/Nm^3									
Moisture, % Volume								(<21)	(ESTIMATED)
Temperature, °C								61	
	Method	ORSAT		ORSAT				GC	
FIXED GASES - % VOLUME	H_2	1.1						T	
	O_2	15.6						19.6	
	N_2	80.4						72.1	
	CH_4							0.1	
	CO	0.3						NF	
	CO_2							3.1	
	Acid Gases	2.0		0.8					
	Sat. HC	0.6							
	Unsat. HC	NF		0.6					
HYDROCARBONS - % VOLUME (GC)	C_2							T	
	C_3							0.004	
	C_4							0.005	
	C_5							T	
	C_6							0.001	
	C_{6+}								
	Benzene							0.43	
	Toluene							0.01	
SULFUR SPECIES ppmv (GC)	H_2S							121	1870
	COS							NF	NF
	CH_3SH							57	631
	C_2H_5SH							137	251
	SO_x								
IMPINGERS - ppmv	H_2S	2 000			1600	340 / 6300	7500	13 000	
	NH_3		37	34		2 000		2 600	
	HCN							130	
	Phenol		NF		NF		4.8		

PHASE I TEST DATA FOR SAMPLE POINT 13.2

		CAMPAIGN I				COMMENTS / NOTES
		RI	2I	KOSOVO	KOSOVO	
Date		SEPT 1977	NOV 22 1977		DEC 28 1977	This Tank is normally not in service; therefore, this stream dropped from subsequent sampling campaigns due to its relatively low flow.
Flow Rate, Nm^3/hr						
Particulate, g/Nm^3						
Moisture, % Volume						
Temperature, °C						
	Method	OLSAT		ORSAT		
FIXED GASES - % VOLUME	H_2	NF				
	O_2	20.3				
	N_2	78.2				
	CH_4					
	CO	0.2				
	CO_2					
	Acid Gases	0.7		0.2		
	Sat. HC	0.6				
	Unsat. HC	NF		0.2		
HYDROCARBONS - % VOLUME (GC)	C_2					
	C_3					
	C_4					
	C_5					
	C_6					
	C_{6+}					
	Benzene					
	Toluene					
SULFUR SPECIES ppmv (GC)	H_2S					
	COS					
	CH_3SH					
	C_2H_5SH					
	SO_x					
IMPINGERS - ppmv	H_2S	NF		430		
	NH_3		NF		230	
	HCN					
	Phenol		NF		T	

PHASE I TEST DATA FOR SAMPLE POINT 13 3

		CAMPAIGN I				CAMPAIGN II			CAMPAIGN III	COMMENTS, NOTES
		RI	RI	KOSOVOI	KOSOVOI	RI	INEP	KOSOVOI		
Date		SEPT 1977	NOV 22 1977		NOV 17 1977	JUNE 1978			NOV 23 1978	
Flow Rate, Nm^3/hr									52.1	three generators in service.
Particulate, g/Nm^3										
Moisture, % Volume									(11.4)	(estimated)
Temperature, °C									48	
	Method	Orsat			Orsat		GC		GC	
FIXED GASES - % VOLUME	H_2	20.4					22 5		NF	
	O_2	0.6					0.8		0.89	
	N_2	1.1					3.0		3.36	
	CH_4						2 7		7 64	
	CO	5.3					3.1		NF	
	CO_2						50.7		86.4	
	Acid Gases	62.0			9.2					
	Sat. HC	9.7								
	Unsat. HC	0.9			0.6					
HYDROCARBONS - % VOLUME (GC)	C_2						0.42 0.37		0.62	
	C_3						0.32 0.25		0.16	
	C_4						1.60 0.42		0.21	
	C_5						0.20 1 56		0.08	
	C_6						0.16 0.53		0.09	
	C_{6+}									
	Benzene								0 49	
	Toluene								0 17	
SULFUR SPECIES ppmv (GC)	H_2S								12 900	
	COS								< 400	
	CH_3SH								1040	
	C_2H_5SH								475	
	SO_x									
IMPINGERS - ppmv	H_2S	37000 24000			8400	30 34000 41000		32000 34000		
	NH_3		46		12	5.3		17		
	HCN									
	Phenol		NF	NF		T		T		

PHASE I TEST DATA FOR SAMPLE POINT 13.4

		CAMPAIGN I						COMMENTS / NOTES
		RI		KOSOVO	KOSOVO	RI	KOSOVO	
Date		Sept 1977		Nov 11 1977	Nov 17 1977	Nov 22 1977	Dec 28 1977	THIS TANK NORMALLY NOT IN SERVICE.
Flow Rate, Nm^3/hr								THIS POINT DROPPED IN SUBSEQUENT CAMPAIGNS DUE TO ITS RELATIVELY LOW FLOW RATE
Particulate, g/Nm^3								
Moisture, % Volume								
Temperature, °C								
	Method	Orsat	Orsat	Orsat				
FIXED GASES - % VOLUME	H_2		NF					
	O_2	19.2	15.2					
	N_2		75.0					
	CH_4							
	CO	NF	NF					
	CO_2							
	Acid Gases	5.0	5.0	1.4				
	Sat. HC	0.6	NF					
	Unsat. HC	NF	0.5	1.0				
HYDROCARBONS - % VOLUME (GC)	C_2							
	C_3							
	C_4							
	C_5							
	C_6							
	C_{6+}							
	Benzene							
	Toluene							
SULFUR SPECIES ppmv (GC)	H_2S							
	COS							
	CH_3SH							
	C_2H_5SH							
	SO_x							
IMPINGERS - ppmv	H_2S		1500		180			
	NH_3				840	NF		
	HCN							
	Phenol					NF	NF	

PHASE I TEST DATA FOR SAMPLE POINT 13.5

		CAMPAIGN I					CAMPAIGN II			CAMPAIGN III	COMMENTS/ NOTES
		RI	KOSOVO	KOSOVO	RI	KOSOVO	RI	INEP	KOSOVO		
Date		Sept 1977	Nov 11 1977	Nov 17 1977	Nov 22 1977	Jan 19 1978	June 1978			Nov 23 1978	
Flow Rate, Nm^3/hr										9.3	3 GENERATORS IN SERVICE
Particulate, g/Nm^3											
Moisture, % Volume										(1.0)	(estimated)
Temperature, °C										7	
	Method	Orsat	Orsat							GC	
FIXED GASES - % VOLUME	H_2	16.2								14.6	
	O_2	12.8								16.6	
	N_2	49.8								61.0	
	CH_4									1.19	
	CO	3.6								NF	
	CO_2									6.15	
	Acid Gases	12.2	11.0								
	Sat. HC	4.6									
	Unsat. HC	0.8	1.2								
HYDROCARBONS - % VOLUME (GC)	C_2							0.40		0.07	
	C_3							0.21		0.05	
	C_4							0.27		0.03	
	C_5							0.13		0.04	
	C_6							0.06		0.03	
	C_{6+}										
	Benzene									0.52	
	Toluene									0.30	
SULFUR SPECIES ppmv (GC)	H_2S									862	
	COS									NQ	NQ Not quantified
	CH_3SH									219	Unknown #1 (as C_2H_5SH) 10 ppmv
	C_2H_5SH									74	
	SO_x										
IMPINGERS - ppmv	H_2S	5200		2400			6900 / 450		23000	6200	
	NH_3			330	49		15.8 / 820		790	NF	
	HCN									170	
	Phenol				NF	NF	11.3		7.2		

PHASE I TEST DATA FOR SAMPLE POINT 13.6

		CAMPAIGN I				CAMPAIGN II			CAMPAIGN III	COMMENTS / NOTES
		RI	KOSOVO	KOSOVO	KOSOVO	RI	INEP	KOSOVO		
Date		Sept 1977	Nov 11 1977	Nov 17 1977	Jan 19 1978	June 1978			Nov 23 1978	
Flow Rate, Nm^3/hr										
Particulate, g/Nm^3										
Moisture, % Volume										
Temperature, °C										
	Method	Orsat	Orsat						GC	
FIXED GASES - % VOLUME	H_2	25.4							11.1	
	O_2	0.6							0.47	
	N_2	3.5							0.56	
	CH_4								6.07	
	CO	7.8							7.17	
	CO_2								72.1	
	Acid Gases	52.6	72.8							
	Sat. HC	9.3								
	Unsat. HC	0.8	0.5							
HYDROCARBONS - % VOLUME (GC)	C_2						1.05		0.4	
	C_3						0.62		0.33	
	C_4						0.72		0.27	
	C_5						0.15		0.15	
	C_6						0.15		0.08	
	C_{6+}									
	Benzene								0.95	
	Toluene								0.40	
SULFUR SPECIES ppmv (GC)	H_2S								12 000	
	COS								NQ	NQ - Not quantifiable
	CH_3SH								947	
	C_2H_5SH								288	
	SO_x									
IMPINGERS - ppmv	H_2S	10 000		3900		2800 11 000 19 000		8500 13 000 16 000	14 000	
	NH_3			53		430		300	20 000	
	HCN								68	
	Phenol				T	17.6 3380		10 10		

PHASE I TEST DATA FOR SAMPLE POINT 13.7

		CAMPAIGN I				CAMPAIGN II			CAMPAIGN III	COMMENTS / NOTES
		RI	Kosovo	Kosovo	Kosovo	RI	INEP	Kosovo		
Date		Sept 1977	Nov 11 1977	Nov 17 1977	Jan 19 1978	June 1978			Nov 23 1978	
Flow Rate, Nm^3/hr									38.2	3 GENERATORS IN SERVICE
Particulate, g/Nm^3										
Moisture, % Volume									(67.3)	(estimated)
Temperature, °C									76	
	Method	Orsat	Orsat						GC	
FIXED GASES - % VOLUME	H_2	NF							T	
	O_2	13.0							12.6	
	N_2	53.4							52.7	
	CH_4								0.2	
	CO	NF							NF	
	CO_2								29.9	
	Acid Gases	33.0	34.2							
	Sat. HC	0.4								
	Unsat. HC	NF	2.2							
HYDROCARBONS - % VOLUME (GC)	C_2						0.01		0.02	
	C_3						0.08		0.01	
	C_4						0.05		0.05	
	C_5						NF		0.09	
	C_6						NF		0.08	
	C_{6+}									
	Benzene								1.61	
	Toluene								0.60	
SULFUR SPECIES ppmv (GC)	H_2S								1880	
	COS								NF	
	CH_3SH								679	
	C_2H_5SH								415	
	SO_x									
IMPINGERS - ppmv	H_2S	6900		700		6800 17000		15000	3400	
	NH_3			49		2700 8100		7700	12 000	
	HCN								38	
	Phenol				NF	34		21		

PHASE I TEST DATA FOR SAMPLE POINT 14.1

		CAMPAIGN I		COMMENTS / NOTES
		RI	KOSOVO	
Date		Nov 23	1977	THIS POINT DROPPED IN SUBSEQUENT CAMPAIGNS DUE TO ITS RELATIVELY LOW FLOW
Flow Rate, Nm^3/hr				
Particulate, g/Nm^3				
Moisture, % Volume				
Temperature, °C				
	Method		Orsat	
FIXED GASES - % VOLUME	H_2			
	O_2			
	N_2			
	CH_4			
	CO			
	CO_2			
	Acid Gases		12 %	
	Sat. HC			
	Unsat. HC		0.4	
HYDROCARBONS - % VOLUME (GC)	C_2			
	C_3			
	C_4			
	C_5			
	C_6			
	C_{6+}			
	Benzene			
	Toluene			
SULFUR SPECIES ppmv (GC)	H_2S			
	COS			
	CH_3SH			
	C_2H_5SH			
	SO_x			
IMPINGERS - ppmv	H_2S		2100	
	NH_3	17	790	
	HCN			
	Phenol	NF		

PHASE I TEST DATA FOR SAMPLE POINT 14.2

		CAMPAIGN I		COMMENTS / NOTES
		RI	KOSOVO	
Date		Sept 1977	Nov 22 1977	THIS POINT DROPPED IN SUBSEQUENT CAMPAIGNS DUE TO ITS RELATIVELY LOW FLOW
Flow Rate, Nm^3/hr				
Particulate, g/Nm^3				
Moisture, % Volume				
Temperature, °C				
	Method	Orsat	Orsat	
FIXED GASES - % VOLUME	H_2	1.2		
	O_2	19.8		
	N_2	74.4		
	CH_4			
	CO	NF		
	CO_2			
	Acid Gases	3.6	6.6	
	Sat. HC	1.0		
	Unsat. HC	NF	0.2	
HYDROCARBONS - % VOLUME (GC)	C_2			
	C_3			
	C_4			
	C_5			
	C_6			
	C_{6+}			
	Benzene			
	Toluene			
SULFUR SPECIES ppmv (GC)	H_2S			
	COS			
	CH_3SH			
	C_2H_5SH			
	SO_x			
IMPINGERS - ppmv	H_2S	430	540	
	NH_3			
	HCN			
	Phenol			

PHASE I TEST DATA FOR SAMPLE POINT 14.3

		CAMPAIGN I		COMMENTS, NOTES
		RI	RI	
Date		Sept 1977	Nov 24 1977	THIS POINT DROPPED IN SUBSEQUENT CAMPAIGNS DUE TO ITS RELATIVELY LOW FLOW
Flow Rate, Nm^3/hr				
Particulate, g/Nm^3				
Moisture, % Volume				
Temperature, °C				
	Method	Orsat		
FIXED GASES - % VOLUME	H_2	NF		
	O_2	20.8		
	N_2	78.6		
	CH_4			
	CO	NF		
	CO_2			
	Acid Gases	0.6		
	Sat. HC	NF		
	Unsat. HC	NF		
HYDROCARBONS - % VOLUME (GC)	C_2			
	C_3			
	C_4			
	C_5			
	C_6			
	C_{6+}			
	Benzene			
	Toluene			
SULFUR SPECIES ppmv (GC)	H_2S			
	COS			
	CH_3SH			
	C_2H_5SH			
	SO_x			
IMPINGERS - ppmv	H_2S	NF		
	NH_3		490	
	HCN			
	Phenol		NF	

PHASE I TEST DATA FOR SAMPLE POINT 14 4

		CAMPAIGN I		COMMENTS/NOTES
		21	KOSOVO	
Date		SEPT 1977	NOV 22 1977	THIS POINT DROPPED IN SUBSEQUENT CAMPAIGNS DUE TO ITS RELATIVELY LOW FLOW
Flow Rate, Nm^3/hr				
Particulate, g/Nm^3				
Moisture, % Volume				
Temperature, °C				
	Method	ORSAT	ORSAT	
FIXED GASES - % VOLUME	H_2	0.2		
	O_2	20.0		
	N_2	79.4		
	CH_4			
	CO	NF		
	CO_2			
	Acid Gases	1.4	0.7	
	Sat. HC	1.0		
	Unsat. HC	NF	0.2	
HYDROCARBONS - % VOLUME (GC)	C_2			
	C_3			
	C_4			
	C_5			
	C_6			
	C_{6+}			
	Benzene			
	Toluene			
SULFUR SPECIES ppmv (GC)	H_2S			
	COS			
	CH_3SH			
	C_2H_5SH			
	SO_x			
IMPINGERS - ppmv	H_2S	NF	NF	
	NH_3			
	HCN			
	Phenol			

PHASE I TEST DATA FOR SAMPLE POINT 14 S

		CAMPAIGN I			CAMPAIGN I			CAMPAIGN II		COMMENTS / NOTES
		RZ	Kosovo	RZ	RZ	INEP	Kosovo			
Date		SEPT [illegible]	NOV. 12 [illegible]	NOV. 1 [illegible]	JUNE 1998			NOV 17 1998	NOV 19 1998	
Flow Rate, Nm^3/hr								139 [illegible]	365 [illegible]	Three generators in Service
Particulate, g/Nm^3										
Moisture, % Volume								72.1	79.3	
Temperature, °C								53	43	
	Method	DESHT	DESHT			GC		GC		
FIXED GASES - % VOLUME	H_2					NF		NF		
	O_2					2.3		9.5		
	N_2					2.0		61.3		
	CH_4					NF		—		
	CO					NF		NF		
	CO_2					21.4		34.5		
	Acid Gases	99.0	17.6							
	Sat. HC									
	Unsat. HC									
HYDROCARBONS - % VOLUME (GC)	C_2					NF		T		
	C_3					NF		T		
	C_4					NF		T		
	C_5					NF		T		
	C_6					NF		NF		
	C_{6+}							NF		
	Benzene									
	Toluene									
SULFUR SPECIES ppmv (GC)	H_2S							24.0		
	COS							NF		
	CH_3SH							150		
	C_2H_5SH							33		
	SO_x									
IMPINGERS - ppmv	H_2S		NF		2100		3000	22000	46000	
	NH_3		34000	NF	220		260	11500 / 2450 / 4900	70000	
	HCN								100	
	Phenol			T	340 / 590		1500			

PHASE I TEST DATA FOR SAMPLE POINT 14 G

		CAMPAIGN I		COMMENTS/NOTES
		KOSOVO	RI	
Date		NOV 22 1977	NOV 23 1977	
Flow Rate, Nm^3/hr				
Particulate, g/Nm^3				
Moisture, % Volume				
Temperature, °C				
	Method	ORSAT		
FIXED GASES - % VOLUME	H_2			
	O_2			
	N_2			
	CH_4			
	CO			
	CO_2			
	Acid Gases	24.4		
	Sat. HC			
	Unsat. HC	0.8		
HYDROCARBONS - % VOLUME (GC)	C_2			
	C_3			
	C_4			
	C_5			
	C_6			
	C_{6+}			
	Benzene			
	Toluene			
SULFUR SPECIES ppmv (GC)	H_2S			
	COS			
	CH_3SH			
	C_2H_5SH			
	SO_x			
IMPINGERS - ppmv	H_2S	NF		
	NH_3	90 000	74 000	
	HCN			
	Phenol		T	

PHASE I TEST DATA FOR SAMPLE POINT 14 7

		CAMPAIGN I				COMMENTS/NOTES
		RI	KOSOVO	RI	KOSOVO	
Date		SEPT 1999	NOV 22 1999	NOV 23 1999	JAN 18 1998	THIS POINT DROPPED IN SUBSEQUENT CAMPAIGNS DUE TO ITS LOW FLOW RATE
Flow Rate, Nm^3/hr						
Particulate, g/Nm^3						
Moisture, % Volume						
Temperature, °C						
	Method	ORSAT	ORSAT			
FIXED GASES - % VOLUME	H_2	NF				
	O_2	20.5				
	N_2	78.1				
	CH_4					
	CO	NF				
	CO_2					
	Acid Gases	0.5	NF			
	Sat. HC	0.9				
	Unsat. HC	NF	NF			
HYDROCARBONS - % VOLUME (GC)	C_2					
	C_3					
	C_4					
	C_5					
	C_6					
	C_{6+}					
	Benzene					
	Toluene					
SULFUR SPECIES ppmv (GC)	H_2S					
	COS					
	CH_3SH					
	C_2H_5SH					
	SO_x					
IMPINGERS - ppmv	H_2S	NF	NF			
	NH_3		200	NF		
	HCN					
	Phenol			NF	NF	

PHASE I TEST DATA FOR SAMPLE POINT 14 P

		CAMPAIGN I				COMMENTS/NOTES
		RI	KOSOVO	RI	KOSOVO	
Date		SEPT 1977	NOV 23 1977	NOV 24 1977	DEC 23 1977	THIS POINT DROPPED IN SUBSEQUENT CAMPAIGNS DUE TO ITS RELATIVELY LOW FLOW
Flow Rate, Nm^3/hr						
Particulate, g/Nm^3						
Moisture, % Volume						
Temperature, °C						
	Method	ORSAT	ORSAT			
FIXED GASES - % VOLUME	H_2	NF				
	O_2	20.7				
	N_2	77.2				
	CH_4					
	CO	NF				
	CO_2					
	Acid Gases	NF	NF			
	Sat. HC	0.9				
	Unsat. HC	1.2	NF			
HYDROCARBONS - % VOLUME (GC)	C_2					
	C_3					
	C_4					
	C_5					
	C_6					
	C_{6+}					
	Benzene					
	Toluene					
SULFUR SPECIES ppmv (GC)	H_2S					
	COS					
	CH_3SH					
	C_2H_5SH					
	SO_x					
IMPINGERS - ppmv	H_2S	NF	NF			
	NH_3		77	17		
	HCN					
	Phenol			NF	NF	

PHASE I TEST DATA FOR SAMPLE POINT 14 9

		CAMPAIGN I				CAMPAIGN II		CAMPAIGN III			COMMENTS / NOTES
		RI	Kosovo	RI	Kosovo	RI	Kosovo				
Date		SEPT 1977	NOV 22 1977	NOV 28 1977	DEC 23 1977	JUNE 1978		NOV 17 1978		NOV 17 1978	
Flow Rate, Nm^3/hr								0.36 - 0.72			3 GENERATORS IN SERVICE
Particulate, g/Nm^3											
Moisture, % Volume								(1.3)			(ESTIMATED)
Temperature, °C								11			
	Method	ORSAT	ORSAT					GC		GC	
FIXED GASES - % VOLUME	H_2	NF						-	-	-	
	O_2	18.6						20.4	18.2	20.5	
	N_2	80.8						76.2	79.1	76.3	
	CH_4							T	T	T	
	CO	NF						NF	NF	NF	
	CO_2							NF	NF	NF	
	Acid Gases	NF	NF								
	Sat. HC	0.6									
	Unsat. HC	NF	0.8								
HYDROCARBONS - % VOLUME (GC)	C_2							T	T	T	
	C_3							T	T	T	
	C_4							T	T	T	
	C_5							T	T	T	
	C_6							NF	NF	NF	
	C_{6+}							NF	NF	NF	
	Benzene										
	Toluene										
SULFUR SPECIES ppmv (GC)	H_2S							NF	NF		
	COS							NF	NF		
	CH_3SH							NF	NF		
	C_2H_5SH							NF	NF		
	SO_x										
IMPINGERS - ppmv	H_2S	NF	NF			7000	7000	180			
	NH_3		940	NF		260	240	12			
	HCN							33.7			
	Phenol			NF	NF	67					

PHASE I TEST DATA FOR SAMPLE POINT 14.10

		CAMPAIGN I			COMMENTS/NOTES
		RI	KOSOVO	KOSOVO1	
Date		SEPT 1977	NOV 23 1977	DEC 23 1977	THIS POINT DROPPED IN SUBSEQUENT CAMPAIGNS DUE TO ITS RELATIVELY LOW FLOW
Flow Rate, Nm^3/hr					
Particulate, g/Nm^3					
Moisture, % Volume					
Temperature, °C					
	Method	ORSAT	ORSAT		
FIXED GASES - % VOLUME	H_2	NF			
	O_2	20.8			
	N_2	78.5			
	CH_4				
	CO	NF			
	CO_2				
	Acid Gases	NF	NF		
	Sat. HC	0.7			
	Unsat. HC	NF	NF		
HYDROCARBONS - % VOLUME (GC)	C_2				
	C_3				
	C_4				
	C_5				
	C_6				
	C_{6+}				
	Benzene				
	Toluene				
SULFUR SPECIES ppmv (GC)	H_2S				
	COS				
	CH_3SH				
	C_2H_5SH				
	SO_x				
IMPINGERS - ppmv	H_2S		NF		
	NH_3		51		
	HCN				
	Phenol			NF	

PHASE I TEST DATA FOR SAMPLE POINT 15.1

		CAMPAIGN I			COMMENTS/NOTES
		RI	KOSOVO	KOSOVO1	
Date		SEPT 1999	NOV 22 1999	JAN 19 1998	THIS POINT DROPPED IN SUBSEQUENT CAMPAIGNS DUE TO ITS RELATIVELY LOW FLOW
Flow Rate, Nm^3/hr					
Particulate, g/Nm^3					
Moisture, % Volume					
Temperature, °C					
	Method	ORSAT	ORSAT		
FIXED GASES - % VOLUME	H_2	NF			
	O_2	18.3			
	N_2	81.0			
	CH_4				
	CO	NF			
	CO_2				
	Acid Gases	NF	0.4		
	Sat. HC	NF			
	Unsat. HC	0.2	1.4		
HYDROCARBONS - % VOLUME (GC)	C_2				
	C_3				
	C_4				
	C_5				
	C_6				
	C_{6+}				
	Benzene				
	Toluene				
SULFUR SPECIES ppmv (GC)	H_2S				
	COS				
	CH_3SH				
	C_2H_5SH				
	SO_x				
IMPINGERS - ppmv	H_2S	890	230		
	NH_3		100		
	HCN				
	Phenol			T	

PHASE I TEST DATA FOR SAMPLE POINT 15.2

		CAMPAIGN I				COMMENTS / NOTES
		RI	RI	KOSOVO	KOSOVO	
Date		SEPT 1977	NOV 21 1977	NOV 22 1977	JAN 19 1978	THIS POINT DROPPED IN SUBSEQUENT CAMPAIGNS DUE TO ITS RELATIVELY LOW FLOW
Flow Rate, Nm^3/hr						
Particulate, g/Nm^3						
Moisture, % Volume						
Temperature, °C						
	Method	ORSAT		ORSAT		
FIXED GASES - % VOLUME	H_2	NF				
	O_2	6.2				
	N_2	88.4				
	CH_4					
	CO	NF				
	CO_2					
	Acid Gases	5.0		0.6		
	Sat. HC	0.4				
	Unsat. HC	NF		1.2		
HYDROCARBONS - % VOLUME (GC)	C_2					
	C_3					
	C_4					
	C_5					
	C_6					
	C_{6+}					
	Benzene					
	Toluene					
SULFUR SPECIES ppmv (GC)	H_2S					
	COS					
	CH_3SH					
	C_2H_5SH					
	SO_x					
IMPINGERS - ppmv	H_2S	1600	1500	310		
	NH_3			75		
	HCN					
	Phenol				T	

PHASE I TEST DATA FOR SAMPLE POINT 15.3

		CAMPAIGN I				CAMPAIGN I		CAMPAIGN II	COMMENTS/NOTES
		RI	RI	KOSOVO	KOSOVO	RI	KOSOVO		
Date		SEPT 1977	NOV 21 1977	NOV 22 1977	JAN 19 1978	JUNE 1978		NOV 25 1978	
Flow Rate, Nm^3/hr								0.093	
Particulate, g/Nm^3									
Moisture, % Volume									
Temperature, °C								1	
	Method	ORSAT		ORSAT				GC	
FIXED GASES - % VOLUME	H_2	NF						NF	
	O_2	9.0						3.89	
	N_2	90.6						95.3	
	CH_4							NF	
	CO	NF						NF	
	CO_2							NF	
	Acid Gases	0.4		0.2					
	Sat. HC	NF							
	Unsat. HC	0.2		0.8					
HYDROCARBONS - % VOLUME (GC)	C_2							0.009	
	C_3							0.007	
	C_4							0.10	
	C_5							0.39	
	C_6							0.18	
	C_{6+}								
	Benzene							0.4	
	Toluene							0.13	
SULFUR SPECIES ppmv (GC)	H_2S							~72	
	COS							NF	
	CH_3SH							4230	
	C_2H_5SH							6980	UNKNOWN #1 (AS C_2H_5SH) - ~19 ppmv UNKNOWN #2 (AS C_2H_5SH) - ~40 ppmv
	SO_x								
IMPINGERS - ppmv	H_2S	NF	NF	190		83		NF	
	NH_3			23		12	NF	NF	
	HCN							1070	
	Phenol				NF	T	NF		

PHASE I TEST DATA FOR SAMPLE POINT 15 4

		CAMPAIGN I				COMMENTS / NOTES
		RI	RI	KOSOVO	KOSOVO	
Date		SEPT 1977	NOV 21 1977	NOV 22 1977	JAN 19 1978	THIS POINT DROPPED IN SUBSEQUENT CAMPAIGNS DUE TO ITS RELATIVELY LOW FLOW
Flow Rate, Nm^3/hr						
Particulate, g/Nm^3						
Moisture, % Volume						
Temperature, °C						
	Method	ORSAT		ORSAT		
FIXED GASES - % VOLUME	H_2	NF				
	O_2	16.0				
	N_2	83.6				
	CH_4					
	CO	NF				
	CO_2					
	Acid Gases	NF		NF		
	Sat. HC	0.4				
	Unsat. HC	NF		NF		
HYDROCARBONS - % VOLUME (GC)	C_2					
	C_3					
	C_4					
	C_5					
	C_6					
	C_{6+}					
	Benzene					
	Toluene					
SULFUR SPECIES ppmv (GC)	H_2S					
	COS					
	CH_3SH					
	C_2H_5SH					
	SO_x					
IMPINGERS - ppmv	H_2S	NF	NF	NF		
	NH_3			3.7		
	HCN					
	Phenol				NF	

PHASE I TEST DATA FOR SAMPLE POINT #C 1

		Campaign I	Campaign II			Campaign III	Comments/Notes
			RI	Reserve	INED		
Date		Nov 1977	June 1978			Nov 25 1978	
Flow Rate, Nm^3/hr						9577	3 Generators in service
Particulate, g/Nm^3							
Moisture, % Volume							
Temperature, °C						15	
	Method					GC	
FIXED GASES - % VOLUME	H_2					NF	
	O_2					T	
	N_2					0.50	
	CH_4					10.1	
	CO					NF	
	CO_2					89.2	
	Acid Gases						
	Sat. HC						
	Unsat. HC						
HYDROCARBONS - % VOLUME (GC)	C_2				1.95	0.01	
	C_3				1.45	0.03	
	C_4				1.06	0.59	
	C_5				0.17	0.14	
	C_6				0.08	0.07	
	C_{6+}						
	Benzene						
	Toluene						
SULFUR SPECIES ppmv (GC)	H_2S					13300	
	COS					~240	
	CH_3SH					1540	
	C_2H_5SH					~620	
	SO_x						
IMPINGERS - ppmv	H_2S	4000	19000	18000		NF	
	NH_3					NF	
	HCN					103	
	Phenol						

APPENDIX B
PHASE I DATA SUMMARY TABLES - LIQUIDS AND SOLIDS

The following tables contain summaries of the raw Phase I test data for liquids and solids. Most of the data has been reported in a previous document (Reference 6) and the remaining data resulted from samples analyzed by Radian Corporation in the United States.

Flow rate data are presented in Appendix C and are not repeated in this section.

TABLE B-1. WASTEWATER DATA

Components	Cyanic Waste Water Sampling Point: 12.3								Phenosolvan Waste Water[a] Sampling Point: 14.11			
	RI	Kosovo	RI	Kosovo	RI	Kosovo	RI	Kosovo	RI	Kosovo	RI	Kosovo
	11/1/77		11/3/77		11/10/77		11/21/77		11/22/77		11/23/77	
pH value	11.75	11.75	11.73	11.5	11.4	11.45	12.1	12.1	9.25	9.25	9.4	9.4
Suspended solids (105°C), mg/l	559	585	241	172	179	179	204	204	190	154	150	n.d.
Total Residue on Evaporation (105°C), mg/l	1991	1935	1338	1307	2091	2091	2314	2314	1450	1032	1190	965
Total Residue of sample (600°C), mg/l	1780	1650	1170	n.d.	x	1650	x	1778	62	64	103	50
Dissolved Matter (105°C) (Filtrable Residue), mg/l	1432	1352	1097	1135	1912	1912	2110	2110	1260	878	1038	952
Fixed Residue of Dissolved matter (600°C), mg/l	1275	1125	934	n.d.	x	1484	x	1588	56	83	103	40
COD ($K_2Cr_2O_7$), mg O_2/l	n.d.	4	n.d.	0.8	23.8	23.8	154	154	3136	3136	3332	3332
Permanganate Value ($KMnO_4$), mg/l	n.d.	74	n.d.	74	16.4	69	139	110	6800	5395	7300	7648
Total Phenols, mg/l	n.d.	n.d.	n.d.	n.d.	n.d.	n.d.	n.d.	n.d.	270	270	170	170
Volatile Phenols, mg/l	0.3	0.2	0.04	0.04	0.1	0.1	0.25	0.15	153	153	160	162
Ammonia free, mg/l	Trace	n.d.	Trace	n.d.	Trace	n.d.	Trace	n.d.	Trace	n.d.	Trace	n.d.
Ammonia fixed, mg/l	1.5	n.d.	1.64	n.d.	2.5	n.d.	2.2	n.d.	201	n.d.	209	n.d.
Cyanide (CN^-), mg/l	0.01	n.d.	0	n.d.	0	n.d.	0.01	n.d.	0.02	n.d.	0.017	n.d.
Tar, Oil (Other extracts), mg/l	0	n.d.	0	n.d.	0	n.d.	0	n.d.	0	n.d.	0	n.d.
Chloride (Cl^-), mg/l	25.5	21.3	20	21.3	37	53.2	36.5	71	95.1	16.1	121.5	16.6
Sulfates, mg/l	515	490	323	480	553	553	668	n.d.	112	n.d.	105	n.d.
Rhodanate (CNS^-), mg/l	0.025	n.d.	0.01	n.d.	0.04	n.d.	0.03	n.d.	2.8	n.d.	3.3	n.d.
Thiosulfates ($S_2O_3^{2-}$), mg/l	Trace	n.d.	Trace	n.d.	Trace	n.d.	Trace	n.d.	Trace	n.d.	Trace	n.d.
Fluorides (F^-), mg/l	0.65	n.d.	0.80	n.d.	0.92	n.d.	1.19	n.d.	Trace	n.d.	Trace	n.d.
Nitrites (NO_2), mg/l	0.29	n.d.	0.05	n.d.	0.06	n.d.	0.82	n.d.	Trace	n.d.	0.03	n.d.
Nitrates (NO_3), mg/l	4.00	n.d.	4.25	n.d.	5.34	n.d.	5.61	n.d.	11.84	n.d.	10.91	n.d.

Note: n.d = not determined

x = failure of porcelain vessels

a = During sampling, Phenosolvan section was not operating within normal production conditions.

Source: Reference 6

RI = Rudarski Institute (Yugoslavia)

Kosovo = Kosovo Combine (Yugoslavia)

TABLE B-2. PROXIMATE AND ULTIMATE ANALYSES OF SOLIDS AND LIQUIDS

	Lignite (2.0) Wet	Lignite (2.0) Dry	Dry Slag (12.1) Wet	Dry Slag (12.1) Dry	Tar and Dust (13.8)* Dry	Tar (15.1) Dry	Medium Oil (15.2) Dry	Gasoline (15.3) As Received
Moisture %	20.23	-	2.05	-	-	-	-	-
Ash %	14.28	17.90	93.46	95.42	6.61	0.22	0.03	-
Sulfur %	0.89	1.11	0.15	0.15	0.33	0.49	0.71	2.15
Carbon %	44.52	55.81	1.74	1.78	55.98	81.92	81.16	85.67
Hydrogen %	3.51	4.40	0.25	0.26	7.63	8.35	8.91	9.85
Nitrogen %	1.08	1.36	0.03	0.03	0.87	1.26	1.01	0.18
Chlorine %	0.01	0.01	0.04	0.04	-	-	-	-
Oxygen (Difference) %	15.48	19.41	2.28	2.32	28.58*	7.76	8.18	2.15
Gross Heating (kcal/kg)	4100	5150	28	28	6340	8910	9150	9940
Methylene Chloride Insoluble Particulates %	-	-	-	-	26.0	-	-	-

* Sample wet when analyzed

Note: Samples brought back to USA for analysis

TABLE B-3. LIQUID BY-PRODUCT DATA

By-Products	Gaso-line	Medium oil	Tar
Measurement Point	15.3	15.2	15.1
Amounts, calculated from design (tons/hr)	0.65	1.55	2.2
Water	-	0.80	1.08
Ash	0.0	-	0.92
Total Sulphur	1.45	0.95	0.75
Gross Heating Value (kcal/kg)	9395	9880	8710
Carbon	78.07	82.43	72.51
Hydrogen	8.72	8.96	8.06
Total phenols	-	2.1	0.7
Spec. gravity, g/cm^3	0.845	0.972	1.059
Residue after extraction with toluene and benzene	-	-	6.9

Source: Reference 6

TABLE B-4. PROXIMATE AND ULTIMATE ANALYSES OF LIGNITE FROM 2.0 (COMPOSITED EACH DAY)

	RUDARSKI INSTITUTE					
	7/25/77		11/1/77		11/2/77	
	WET	DRY	WET	DRY	WET	DRY
Moisture %	22.00	--	28.66	--	24.59	--
Ash %	15.71	20.14	17.03	23.87	12.00	15.91
Total Sulfur %	1.03	1.32	1.43	2.01	0.91	1.21
Free Sulfur %	0.85	1.09	0.96	1.35	0.69	0.92
Fixed Sulfur %	0.18	0.23	0.47	0.66	0.22	0.29
Coke %	42.91	55.01	39.49	55.35	39.71	52.66
Fixed Carbon %	27.20	34.87	22.46	31.48	27.71	36.75
Volatiles %	35.09	44.99	31.85	44.65	35.70	47.34
Combustibles %	62.29	79.86	54.31	76.13	63.41	84.09
Gross Heating Values (kcal/kg)	3875	4970	3220	4510	4010	5320
Carbon dioxide (CO_2) %			3.70	5.19	--	--
Carbon %	42.70	54.74	35.61	49.92	43.64	57.87
Hydrogen %	3.10	3.97	3.19	4.47	3.59	4.76
Nitrogen + Oxygen %	16.31	20.92	15.04	21.08	15.96	21.17

TABLE B-4. CONTINUED

	RUDARSKI INSTITUTE					
	11/3/77		11/4/77		11/5/77	
	WET	DRY	WET	DRY	WET	DRY
Moisture %	24.34	--	22.86	--	24.65	--
Ash %	15.20	20.2	17.73	22.99	20.65	27.41
Total Sulfur %	1.07	1.41	1.03	1.34	1.27	1.68
Free Sulfur %	0.78	1.03	0.71	0.92	0.81	1.08
Fixed Sulfur %	0.29	0.38	0.32	0.42	0.46	0.60
Coke %	41.49	54.84	43.37	56.22	43.29	57.44
Fixed Carbon %	26.21	34.64	25.64	33.23	22.64	30.03
Volatiles %	34.17	45.16	33.77	43.78	32.06	42.56
Combustibles %	60.38	79.80	59.41	77.01	54.07	72.59
Gross Heating Values (kcal/kg)	3760	4970	3520	4560	3210	4255
Carbon dioxide (CO_2) %					--	--
Carbon %					33.35	44.27
Hydrogen %					2.85	3.78
Nitrogen + Oxygen %					18.04	23.94

TABLE B-4. CONTINUED

	RUDARSKI INSTITUTE					
	11/6/77		11/7/77		11/8/77	
	WET	DRY	WET	DRY	WET	DRY
Moisture %	23.82	--	22.63	--	22.64	--
Ash %	14.06	18.46	16.66	21.53	12.61	16.30
Total Sulfur %	1.07	1.41	1.08	1.40	1.05	1.36
Free Sulfur %	0.76	1.00	0.64	0.83	0.75	0.97
Fixed Sulfur %	0.31	0.41	0.44	0.57	0.30	0.39
Coke %	41.22	54.11	43.06	55.66	41.70	53.93
Fixed Carbon %	27.16	35.65	26.41	34.13	29.09	37.61
Volatiles %	34.96	45.89	34.31	44.34	35.66	46.09
Combustibles %	62.12	81.54	60.72	78.47	64.75	83.70
Gross Heating Values (kcal/kg)	3865	5075	3665	4740	4100	5300
Carbon dioxide (CO_2) %						
Carbon %						
Hydrogen %						
Nitrogen + Oxygen %						

TABLE B-4. CONTINUED

	RUDARSKI INSTITUTE					
	11/9/77		11/10/77		11/11/77	
	WET	DRY	WET	DRY	WET	DRY
Moisture %	23.77	--	20.28	--	23.55	--
Ash %	15.32	20.23	14.93	18.73	15.20	19.88
Total Sulfur %	1.06	1.39	1.43	1.80	1.18	1.54
Free Sulfur %	0.69	0.91	0.95	1.19	0.80	1.05
Fixed Sulfur %	0.37	0.48	0.48	0.61	0.38	0.49
Coke %	42.00	55.10	41.62	52.21	42.62	55.75
Fixed Carbon %	26.58	34.87	26.69	33.48	27.42	35.87
Volatiles %	34.23	44.90	38.10	47.79	33.83	44.25
Combustibles %	60.81	79.77	64.79	81.27	61.25	80.12
Gross Heating Values (kcal/kg)	3785	4965	4035	5060	3810	4990
Carbon dioxide (CO_2) %					2.70	3.53
Carbon %					41.83	54.72
Hydrogen %					3.36	4.40
Nitrogen + Oxygen %					15.68	20.51

TABLE B-4. CONTINUED

	RUDARSKI INSTITUTE					
	11/12/77		11/21/77		11/22/77	
	WET	DRY	WET	DRY	WET	DRY
Moisture %	24.06	--	21.28	--	23.86	--
Ash %	10.43	13.73	12.19	15.49	10.85	14.25
Total Sulfur %	1.16	1.53	1.11	1.41	1.13	1.48
Free Sulfur %	0.80	1.05	0.84	1.07	0.84	1.10
Fixed Sulfur %	0.36	0.48	0.27	0.34	0.29	0.38
Coke %	39.95	52.61	41.84	53.5	40.45	53.12
Fixed Carbon %	29.52	38.88	29.65	37.66	29.60	38.88
Volatiles %	35.99	47.39	36.88	46.85	35.69	46.87
Combustibles %	65.51	86.27	66.53	84.51	65.29	85.75
Gross Heating Values (kcal/kg)	4185	5515	4210	5350	4170	5480
Carbon dioxide (CO_2) %						
Carbon %						
Hydrogen %						
Nitrogen + Oxygen %						

TABLE B-4. CONTINUED

	RUDARSKI INSTITUTE					
	11/23/77		11/24/77		11/25/77	
	WET	DRY	WET	DRY	WET	DRY
Moisture %	23.85	--	25.66	--	22.77	--
Ash %	12.12	15.92	10.57	14.22	13.34	17.27
Total Sulfur %	1.15	1.51	0.99	1.33	1.05	1.36
Free Sulfur %	0.84	1.10	0.71	0.95	0.89	1.15
Fixed Sulfur %	0.31	0.41	0.28	0.38	0.16	0.21
Coke %	40.89	53.69	39.12	52.62	42.41	54.92
Fixed Carbon %	28.77	37.77	28.55	38.40	29.07	37.65
Volatiles %	35.26	46.31	35.22	47.38	34.82	40.08
Combustibles %	64.03	84.08	63.77	85.78	63.89	82.73
Gross Heating Values (kcal/kg)	4050	5320	4075	5480	3980	5150
Carbon dioxide (CO_2) %	1.29	1.70				
Carbon %	44.07	57.87				
Hydrogen %	3.62	4.76				
Nitrogen + Oxygen %	16.03	21.04				

Source: Reference 6

TABLE B-5. - PROXIMATE ANALYSES OF DRIED LIGNITE FROM 2.0 (COMPOSITED EACH DAY)

	KOSOVO INSTITUTE					
	11/2/77		11/3/77		11/4/77	
	WET	DRY	WET	DRY	WET	DRY
Moisture %	25.23	--	25.14	--	23.30	--
Ash %	12.16	16.27	15.28	20.41	17.26	22.50
Total Sulfur %	1.00	1.35	1.21	1.62	1.09	1.42
Free Sulfur %	0.69	0.93	0.79	1.06	0.77	1.01
Fixed Sulfur %	0.31	0.42	0.42	0.56	0.32	0.41
Coke %	38.54	51.55	39.54	52.83	41.69	54.36
Fixed Carbon %	26.38	35.28	24.26	32.42	24.43	31.86
Volatiles %	36.23	48.45	35.32	47.17	35.01	45.64
Combustibles %	62.61	83.73	59.58	79.59	59.44	77.50

	KOSOVO INSTITUTE					
	11/5/77		11/6/77		11/7/77	
	WET	DRY	WET	DRY	WET	DRY
Moisture %	25.13	--	24.50	--	23.42	--
Ash %	18.49	24.69	13.23	17.52	15.68	20.48
Total Sulfur %	1.46	1.95	1.24	1.64	1.00	1.30
Free Sulfur %	0.87	1.16	0.81	1.07	0.72	0.94
Fixed Sulfur %	0.59	0.79	0.43	0.57	0.28	0.36
Coke %	42.82	57.19	38.72	51.29	42.09	54.96
Fixed Carbon %	24.33	32.50	25.49	33.77	26.41	34.48
Volatiles %	32.05	42.81	36.78	48.71	34.49	45.04
Combustibles %	56.38	75.31	62.27	82.48	60.90	79.52

TABLE B-5. CONTINUED

	KOSOVO INSTITUTE					
	11/8/77		11/9/77		11/10/77	
	WET	DRY	WET	DRY	WET	DRY
Moisture %	22.49	--	24.33	--	21.17	--
Ash %	13.48	17.39	15.09	19.94	10.17	13.58
Total Sulfur %	1.16	1.50	0.98	1.30	1.84	2.34
Free Sulfur %	0.81	1.04	0.79	1.04	0.84	1.07
Fixed Sulfur %	0.35	0.46	0.19	0.26	1.00	1.27
Coke %	41.12	53.05	40.78	53.89	39.40	50.03
Fixed Carbon %	27.64	35.66	86.69	33.95	28.73	36.45
Volatiles %	36.39	46.95	34.89	46.11	39.39	49.97
Combustibles %	64.03	82.61	60.58	80.06	68.12	86.42

	KOSOVO INSTITUTE					
	11/11/77		11/12/77		11/13/77	
	WET	DRY	WET	DRY	WET	DRY
Moisture %	24.17	--	23.81	--	22.65	—
Ash %	14.64	19.31	14.35	18.83	17.91	21.16
Total Sulfur %	1.57	2.07	1.14	1.49	0.90	1.17
Free Sulfur %	0.83	1.09	0.76	0.99	0.73	0.94
Fixed Sulfur %	0.74	0.98	0.38	0.50	0.17	0.23
Coke %	41.73	55.03	41.33	54.25	43.22	55.88
Fixed Carbon %	27.09	35.72	26.98	35.42	25.31	32.72
Volatiles %	34.10	44.97	34.86	45.75	34.13	44.12
Combustibles %	61.19	80.69	61.84	81.17	59.44	76.84

TABLE B-5. CONTINUED

	KOSOVO INSTITUTE					
	11/21/77		11/22/77		11/23/77	
	WET	DRY	WET	DRY	WET	DRY
Moisture %	22.16	--	24.77	--	24.84	--
Ash %	11.78	15.13	10.49	13.95	13.87	18.46
Total Sulfur %	1.28	1.65	1.44	1.92	1.34	1.78
Free Sulfur %	0.89	1.14	0.86	1.15	0.94	1.25
Fixed Sulfur %	0.39	0.51	0.58	0.77	0.40	0.53
Coke %	39.53	50.79	38.40	51.04	40.85	54.35
Fixed Carbon %	27.75	35.66	27.91	37.09	26.98	35.98
Volatiles %	38.31	49.21	36.83	48.96	34.31	45.65
Combustibles %	66.06	84.87	64.74	86.05	61.29	81.54

	KOSOVO INSTITUTE			
	11/24/77		11/25/77	
	WET	DRY	WET	DRY
Moisture %	30.16	--	26.14	--
Ash %	11.45	16.39	12.07	16.34
Total Sulfur %	0.93	1.33	1.03	1.40
Free Sulfur %	0.73	1.04	0.83	1.12
Fixed Sulfur %	0.20	0.29	0.20	0.28
Coke %	36.46	52.21	39.37	53.31
Fixed Carbon %	25.01	35.82	27.30	36.97
Volatiles %	33.38	47.79	34.49	46.69
Combustibles %	58.39	83.61	61.79	83.66

Source: Reference 6

TABLE B-6. PROPERTIES OF SLAG FROM 12.2

Properties		7/26/77		11/1/77		11/3/77		11/10/77		11/21/77		11/23/77	
		Wet	Dry	Wet	Dry	Wet	Dry	Wet	Dry	Wet	Dry	Wet	Dry
Rudarski Institute													
Moisture	%	36.30	-	28.75	-	37.15	-	32.68	-	29.34	-	35.88	-
Ash	%	58.16	91.31	61.78	86.71	54.89	87.33	60.20	89.42	63.16	89.38	57.69	89.97
C fix	%	0.90	1.40	2.46	3.45	0.96	1.53	1.16	1.73	1.56	2.21	0.13	0.20
Coke	%	59.06	92.71	64.24	90.16	55.85	88.86	61.36	91.15	64.72	91.59	57.82	90.17
Volatiles	%	4.64	7.29	7.01	9.84	7.00	11.14	5.96	8.85	5.94	8.41	6.30	9.83
Combustibles	%	5.54	8.69	9.47	13.29	7.96	12.67	7.12	10.58	7.50	10.62	6.43	10.03
Carbon dioxide (CO_2)	%			-	-	5.94	9.46						
Upper size limit (mm)		~10		~10		~10		~10		~10		~10	
Kosovo Institute													
Moisture	%			0.46	-	0.37	-	0.28	-	0.50	-	0.43	-
Ash	%			89.89	90.31	80.24	88.57	89.47	89.72	92.22	92.68	92.12	92.52
C fix	%			3.10	3.11	6.03	6.05	6.20	6.22	2.33	2.35	3.13	3.14
Coke	%			92.99	93.42	94.27	94.62	95.67	95.94	94.55	95.03	95.25	95.66
Volatiles	%			6.55	6.58	5.36	5.38	4.05	4.06	4.95	4.97	4.32	4.34
Combustibles	%			9.65	9.69	11.39	11.43	10.25	10.28	7.28	7.32	7.45	7.48
Sulphur total	%			0.40	0.40	0.63	0.63	0.45	0.45	0.41	0.41	0.41	0.41
S combust.	%			0.22	0.22	0.48	0.48	0.22	0.22	0.20	0.20	0.17	0.17
S bound	%			0.18	0.18	0.15	0.15	0.23	0.23	0.21	0.21	0.24	0.24

Source: Reference 6

APPENDIX C

MASS BALANCE CALCULATIONS

To determine the correlation between design and experimental data, a series of mass balance calculations were performed on the Kosovo gasification system. The first effort involved a component balance around a single Lurgi gasifier. The second effort involved a sulfur balance which encompassed the gasification, quench/cooling, tar/oil separation, Rectisol, and Phenosolvan sections. The primary bases used for these calculations were the operational data obtained during Campaigns I-III of Phase I. In cases where critical data gaps existed, design data were used.

Component Mass Balance Around the Lurgi Gasifier

The goal of this mass balance was to determine the extent of recovery for selected components from the feedstock in the product gas. The input streams used in this set of calculations are:

- coal,
- steam, and
- oxygen,

while the output streams are:

- ash, and
- hot raw gas.

Since the hot raw gas stream could not be sampled directly, other output streams from downstream units were chosen to form a "calculated" composite output stream. The streams believed to be most representative for purposes of generating this information were:

- Rectisol inlet gas,
- by-product tars, oil, gasoline, phenol, and
- Phenosolvan wastewater.

Several assumptions were made in the execution of this mass balance. Figure C-1 presents a compilation of these assumptions.

The basis chosen for these calculations was the design flow of coal to each gasifier (16,000 kg per hour). In order to perform the necessary calculations, the compositions and flow rates of all other input streams were determined using data from the Campaign I sampling program. The composition of the output ash was also obtained from Campaign I data. Table C-1 shows all of the values used to initiate the mass balance calculations.

By using the assumptions given in Figure C-1, component flow rates for the three input streams and the ash stream were calculated and are given in Table C-2.

The next step in the calculation sequence was the determination of similar quantities for the hot raw gas stream using sampling data obtained primarily from Campaign III. Tables C-3 and C-4 give the appropriate compositions and flow rate data

FIGURE C-1. ASSUMPTIONS USED IN GASIFIER MASS BALANCE

- Coal feed to gasifier contains 2 wt% N and 14.5 wt% O. Ultimate analysis data (see Appendix B) did not discriminate between these elements in most cases.
- Oxygen input to gasifier is 95 percent O_2 and 5 percent N_2.
- The amount of inert ash entering with the coal equals the amount of inert ash leaving with the gasifier ash.
- Volatiles in the gasifier bottom ash are H_2O and O_2 and are in the same proportions as in the input steam/oxygen mixture.
- Gasifier bottom ash contains no H_2 or N_2.
- Rectisol inlet gas flowrate can be closely approximated by the summation of the measured flow rates of the following streams:

    1) Rectisol outlet gas flowrate
    2) H_2S-rich gas flowrate
    3) CO_2 vent gas flowrate

- C_nH_m (ORSAT data) is equivalent to propane (C_3H_8).
- By-product phenol to storage can be represented by C_6H_6O (molecular weight = 110).
- Coal and ash lock expansion gas volumes are negligible compared to those of the hot raw gas and bottom ash output streams from the gasifier.

TABLE C-1. COMPOSITION OF FIXED STREAMS FOR MATERIAL BALANCE

	Coal* (wt %)	Steam (wt %)	Oxygen (vol %)	Ash* (wt %)
Component				
H_2O	23.9	100		
Inert ash	14.4			90.4
S	1.1			0.5
C	40.8			
H	3.3			
N	2.0			
O	14.5			
O_2			95	
N_2			5	
Fixed carbon				4.1
Volatiles				5.0
	100.0	100	100	100.0
Flowrate	16,000 (kg/h)	12,700* (kg/h)	1640* (Nm^3/h)	-

*Selected from Campaign I data.

TABLE C-2. MASS FLOWRATES OF ELEMENTS IN THE MAJOR INPUT STREAMS AND ASH OUTPUT STREAM OF THE LURGI GASIFIER AT KOSOVO

	Input (kg/hr)		Output (kg/hr)
	Coal	Steam/Oxygen	Ash
Component			
S	179	-	11.5
C	6500	-	105
H	943	1411.0	11.9
N	320	102.5	-
O	5680	13,509	114.8

TABLE C-3. COMPOSITION AND FLOWRATE INFORMATION FOR RECTISOL INLET GAS AS EXTRACTED FROM CAMPAIGN III SAMPLING DATA

Composition[a]		Flowrate[b]	
Component	Vol %	Rectisol outlet gas flowrate[c]	12,840 Nm^3/h
H_2	36.2	H_2S-rich gas flowrate[d]	1,243 Nm^3/h
CO	13.6	CO_2 vent gas flowrate[e]	4,694 Nm^3/h
N_2	1.56		
CH_4	12.9	Total	18,417 Nm^3/h
CO_2	33.5		
C_nH_m	1.21		
H_2S	0.47		
O_2	0.55		
NH_3	0.00033		
HCN	0.00605		
	100.0		

[a]From Sample Point 7.3, Campaign III

[b]One gasifier-in-service basis

[c]Design flowrate

[d]From Sample Point 7.1, Campaign III

[e]From Sample Point 7.2, Campaign III

TABLE C-4. COMPOSITION AND FLOWRATE[a] INFORMATION FOR ADDITIONAL STREAMS NEEDED TO FORM COMPOSITE HOT RAW GAS STREAM

Tar & Dust, 100 kg/h	wt %, dry	Tar, 400 kg/h	wt %, dry	Medium Oil, 250 kg/h	wt %, dry
S	0.33	S	0.49	S	0.71
C	55.98	C	81.92	C	81.16
H	7.63	H	8.35	H	8.91
N	0.87	N	1.26	N	1.01
O[b]	28.58	O[b]	7.76	O[b]	8.18
Inert ash	6.61	Inert ash	0.22	Inert ash	0.03

Gasoline, 130 kg/h	wt %, dry	Phenosolvan Wastewater[c], 13,000 kg/h	mg/ℓ	Phenol, 90 kg/h	100% C_6H_6O
S	2.15	Phenol	220		
C	85.67	Fixed NH_3	205		
H	9.85	HCN	0.018		
N	0.18				
O[b]	2.15				
Inert ash	0.00				

[a]Design data

[b]By difference

[c]As averaged from Campaign I data

for the streams chosen to comprise the composite hot raw gas stream. The component flow rates for the streams which were used to generate a composite hot raw gas stream are tabulated in Table C-5. Table C-6 provides a summary of the component mass balance calculations.

An examination of the data presented in Table C-6 shows that reasonable accountability was observed for all of the major components considered. Although the number of assumptions necessary for the calculations limits the usefulness of the results, it can be concluded generally that there are no serious errors in any of the data used in performing these calculations.

Sulfur Mass Balance

The goal of the sulfur mass balance was the determination of whether the sulfur entering the Kosovo gasification system could be accounted for in the effluent streams. The result of this balance is discussed below.

The sole source of sulfur entering the system is the dried lignite fed to the gasifier. Sulfur leaves the system in solid, liquid, and gaseous streams. For the purpose of this mass balance, it appeared more useful to perform these calculations around key plant sections rather than around the entire gasification plant. For this reason, a decision was made to study these key areas of the plant independently. These areas consist of the:

- Gasification, quench/cooling, and tar separation sections,

TABLE C-5. MASS FLOWRATES FOR ELEMENTS AND ASH IN THE STREAMS FORMING COMPOSITE HOT RAW GAS STREAM

	Component Flowrate, kg/h							
	Rectisol Inlet Gas	Tar	Tar & Dust	Medium Oil	Gasoline	Phenosolvan Wastewater	Phenol	Total
Component								
S	122	2	0.3	1.8	2.8	-	-	129
C	6,227	328	56	203	111.4	1.9	58.9	6,986
H	1,098	33.4	7.6	22.3	12.8	1,445	4.9	2,624
N	356	5	0.9	2.5	0.2	2.2	-	367
O	10,667	31	28.6	20.5	2.8	11,556	26.2	22,332
Inert ash	-	0.9	6.6	-	-	-	-	7.5

TABLE C-6. SUMMARY OF MASS BALANCE RESULTS FOR THE LURGI GASIFIER AT KOSOVO

	Input (kg/hr)			Output (kg/hr)			Percent
	Coal	Steam/Oxygen	Total	Ash	Hot Raw Gas	Total	Accountability*
Component							
S	179	-	179	11.5	129	140.5	78.5
C	6500	-	6500	105.0	6986	7091	109
H	943	1411	2354	11.9	2624	2635.9	112
N	320	102.5	422.5	-	367	367	86.8
O	5680	13,509	19,189	114.8	22,332	22,446.8	117
Inert Ash	2287.5	-	2287.5	2280	7.5	2287.5	100

* (Total output/total input) x 100%

- Rectisol section, and
- Phenosolvan section.

Figures C-2, C-3, and C-4 are schematic representations of these areas with the principal sulfur containing streams entering and leaving each section indicated.

The information used to calculate the amounts of sulfur in the appropriate input and output streams were taken from several sources. Most of the information came from sampling data obtained during Campaign III. Flow rate information was taken predominantly from design data. The combination of these data was felt to provide a sufficiently reliable base for an initial attempt at a sulfur mass balance.

A summary of the sulfur mass balance calculations performed for the gasification, quench/cooling, and tar separation sections is presented in Table C-7. Table C-8 contains a summary of the sulfur mass balance calculations for the Rectisol section.

A complete analysis of Phenosolvan inlet wastewater was not made in Phase I. Therefore, it was not possible to make a sulfur balance around this unit. A simulated sulfur inlet flow rate was computed, however, since this datum point was needed to complete a mass balance around the gasification, quench/cooling and tar separation sections. An independent check of this balance should be made in Phase II, when Phenosolvan inlet and outlet water should be sampled and analyzed. A summary of the sulfur mass balance calculations for the Phenosolvan section is presented in Table C-9.

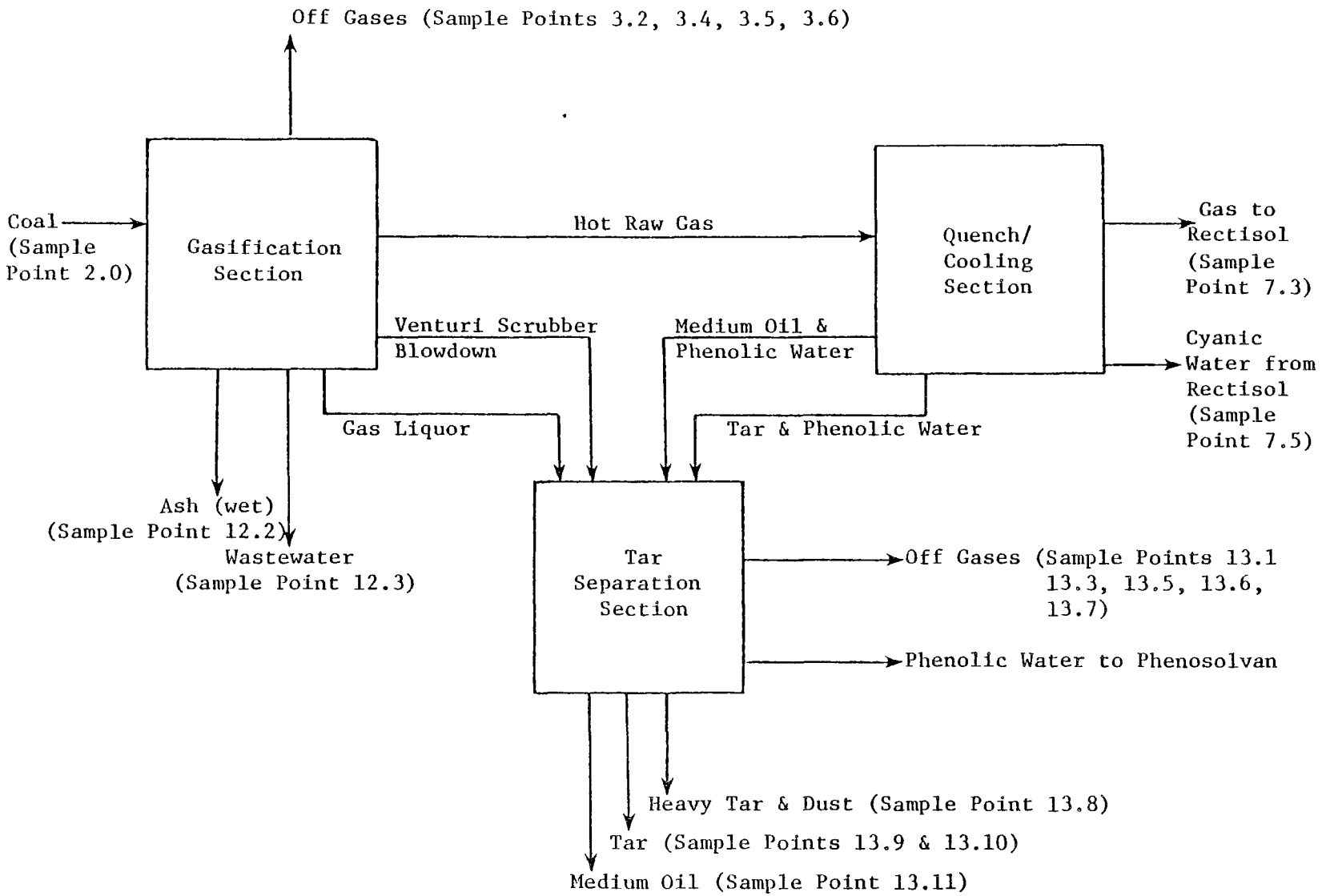

Figure C-2. Principal Sulfur-Containing Streams in Kosovo Gasification, Quench/Cooling, and Tar Separation Sections

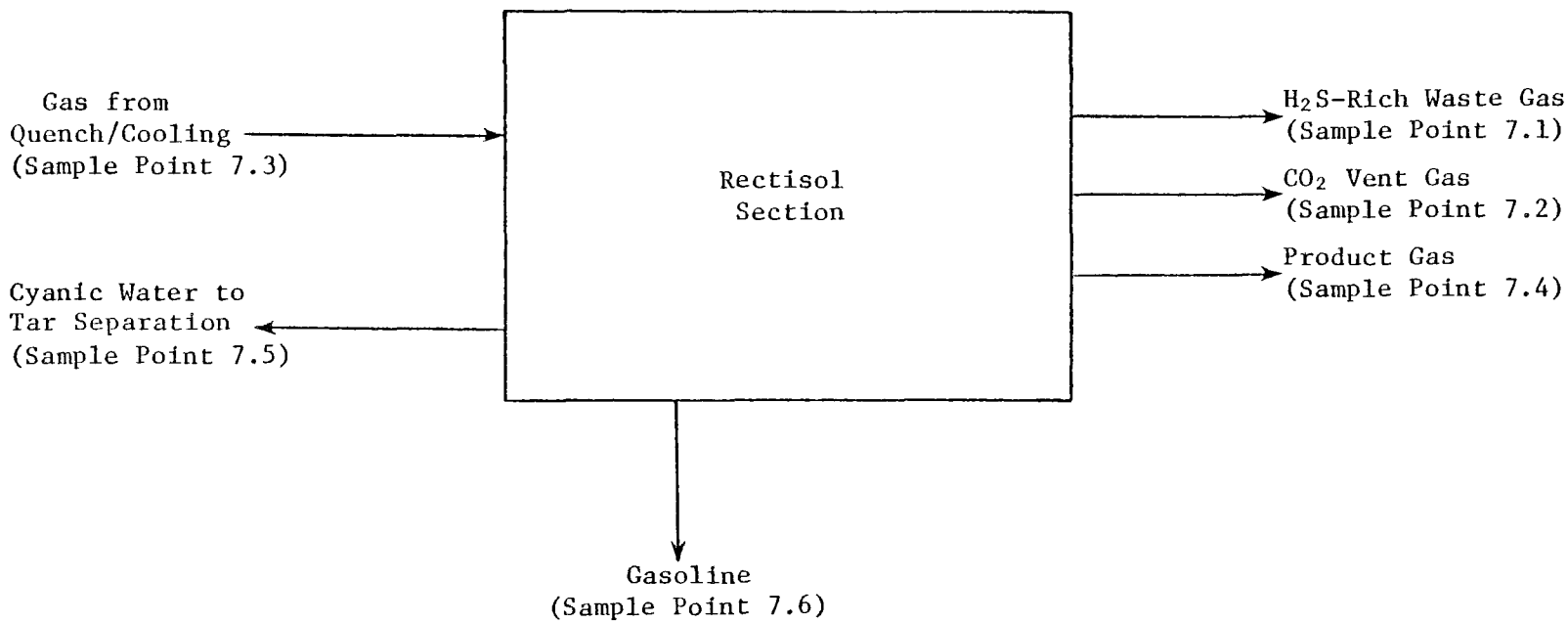

Figure C-3. Principal Sulfur-Containing Streams in Kosovo Rectisol Section

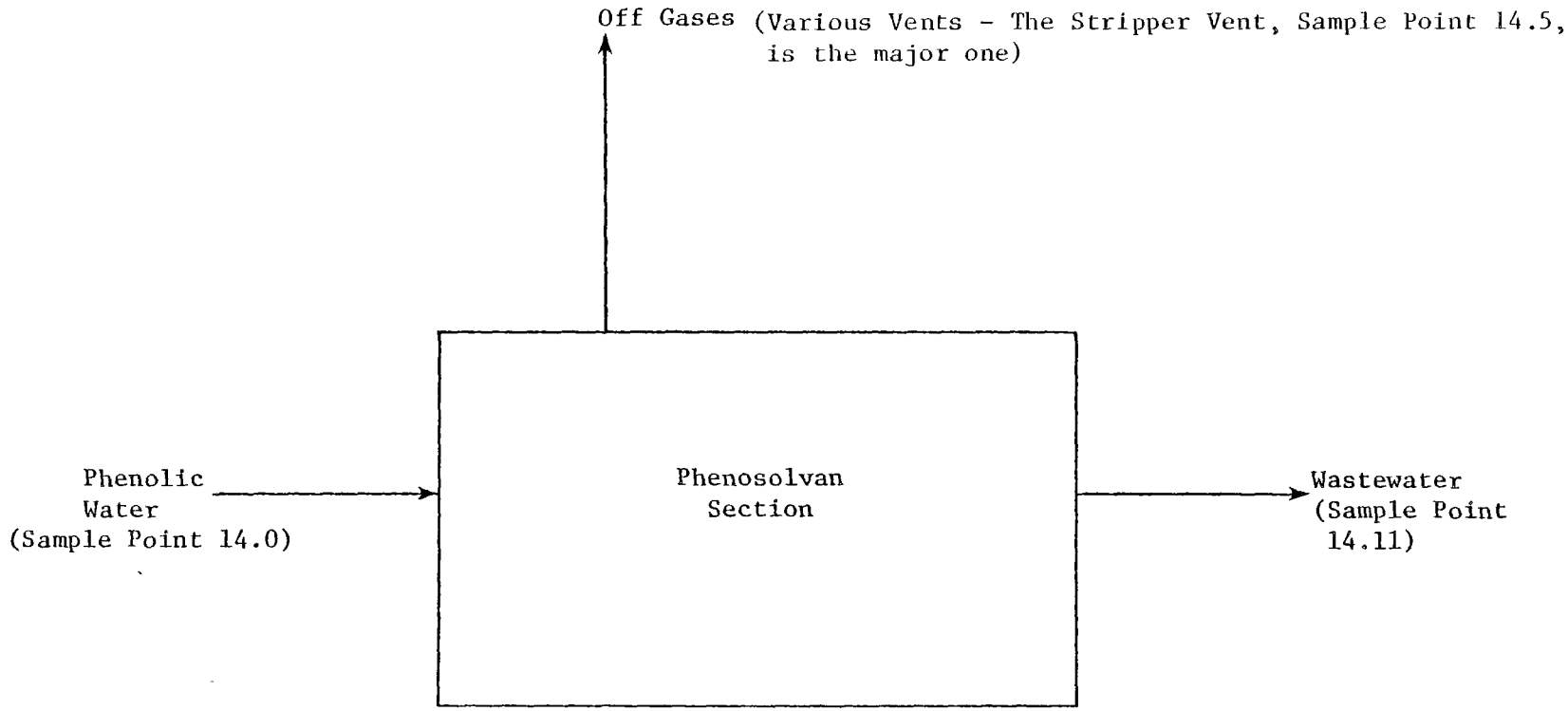

Figure C-4. Principal Sulfur-Containing Streams in Kosovo Phenosolvan Section

TABLE C-7. SUMMARY OF SULFUR MASS BALANCE CALCULATIONS FOR THE KOSOVO GASIFICATION, QUENCH/COOLING AND TAR SEPARATION SECTIONS

	Stream	Flow/hr	S Content	Stream S Flow (kg/hr)	Total S Flow (kg/hr)
Input	Coal	1600 kg	0.89 wt%	142	142
Output	Bottom Ash, wet (12.2)	2700 kg	0.15 wt%	4	
	Wastewater (12.3)	3000 kg	0.017 wt%	0.5	
	Heavy tar and dust (13.8)	100 kg	0.33 wt%	0.33	
	Tar (13.9 + 13.10)	400 kg	0.49 wt%	1.96	
	Medium oil (13.11)	250 kg	0.71 wt%	1.8	
	Gas to Rectisol (7.3)	16,000 Nm^3	5000 ppmv*	114	
	Phenolic water to Phenosolvan	a	a	3.3[a]	
	Off gases				
	3.2	36 Nm^3	∿3000 ppmv*	0.07	
	3.4	40 Nm^3	∿15,000 ppmv*	0.76	
	3.5	28 Nm^3	∿700 ppmv*	0.0025	
	3.6	402 Nm^3	∿2500 ppmv*	1.43	
	13.1	0.45 Nm^3	∿1800 ppmv*	0.001	
	13.3	0.4 Nm^3	∿35,000 ppmv*	0.02	
	13.5	9.3 Nm^3	∿5000 ppmv*	0.066	
	13.6	26 Nm^3	∿15,000 ppmv*	0.56	
	13.7	13 Nm^3	∿6000 ppmv*	0.11	
					128.9 (91% accountability)

* As H_2S

[a] Estimated value calculated from Phenosolvan unit output streams.

TABLE C-8. SUMMARY OF SULFUR MASS BALANCE FOR THE KOSOVO RECTISOL SECTION

	Stream	Flow/hr	S Content	Stream S Flow (kg/hr)	Total S Flow (kg/hr)
Input	Gas from Quench/ Cooling	16,000 Nm^3	5000 ppmv*	114	114
Output	Cyanic Water	a	a		
	Gasoline	130 kg	2.1 wt%	2.7	
	Product gas	12,480 Nm^3	∿1.5 ppmv*	0.027	
	H_2S-rich gas	2500 Nm^3	∿25,000 ppmv*	89.3	
	CO_2 vent gas	4700 Nm^3	∿50 ppmv*	0.33	
					92 (81% accountability)

* As H_2S

a Flow rate and composition are unknown. This stream will be sampled during Phase II.

TABLE C-9. SUMMARY OF SULFUR MASS BALANCE FOR THE KOSOVO PHENOSOLVAN SECTION

	Stream	Flow/hr	S Content	Stream S Flow (kg/hr)	Total S Flow (kg/hr)
Input	Phenolic water	a	a	a	
					a
Output	Wastewater	13,000 kg	0.0033 wt%	0.43	
	Off gases				
	14.1	2 Nm^3	∿2000 ppmv*	0.006	
	14.5	100 Nm^3	∿20,000 ppmv*	2.86	
					3.3

* As H_2S

a Flow rate and composition are unknown. This stream will be sampled during Phase II.

TECHNICAL REPORT DATA
(Please read Instructions on the reverse before completing)

1. REPORT NO. EPA-600/7-79-190	2.	3. RECIPIENT'S ACCESSION NO.
4. TITLE AND SUBTITLE Environmental Assessment: Source Test and Evaluation Report--Lurgi (Kosovo) Medium-Btu Gasification, Phase 1		5. REPORT DATE August 1979
		6. PERFORMING ORGANIZATION CODE
7. AUTHOR(S) K. J. Bombaugh, W. E. Corbett, and M. D. Matson		8. PERFORMING ORGANIZATION REPORT NO.
9. PERFORMING ORGANIZATION NAME AND ADDRESS Radian Corporation P.O. Box 9948 Austin, Texas 78766		10. PROGRAM ELEMENT NO. EHE623A
		11. CONTRACT/GRANT NO. 68-02-2608, Task 57
12. SPONSORING AGENCY NAME AND ADDRESS EPA, Office of Research and Development Industrial Environmental Research Laboratory Research Triangle Park, NC 27711		13. TYPE OF REPORT AND PERIOD COVERED Task Phase I; 9/78 - 6/79
		14. SPONSORING AGENCY CODE EPA/600/13

15. SUPPLEMENTARY NOTES IERL-RTP project officer is William J. Rhodes, Mail Drop 61, 919/541-2851.

16. ABSTRACT The report summarizes an ongoing test program involving a commercial medium-Btu Lurgi coal gasification plant in the Kosovo region of Yugoslavia. The environmental data acquisition program is sponsored by the U.S. EPA and the government of Yugoslavia. The objective of the program is to characterize potential environmental problems and control technology needs associated with the gasification of lignite coal in a state-of-the-art Lurgi gasification plant. This timely program is enabling the EPA to study firsthand the environmental problems which may be encountered by future operators of U.S. gasification plants. Phase I of the tests, now complete, concentrated on the characterization of major pollutants in the plant's gaseous emissions. Some characterization of the plant's liquid and solid waste streams and its by-products were also performed. A SAM/IA analysis of the gaseous emissions indicated that the major pollutants of concern are CO, benzene, H2S, mercaptans, and NH3. The Phenosolvan effluent contained a high concentration of organics and had a high (11-12) pH. The sulfur concentration of lights (i.e., gasoline) in the by-product streams was significantly higher than that of the heavies (i.e., tar). Phase II will emphasize detailed characterization of trace organics and trace elements in the plant's multimedia waste streams and control options.

17. KEY WORDS AND DOCUMENT ANALYSIS

a. DESCRIPTORS		b. IDENTIFIERS/OPEN ENDED TERMS	c. COSATI Field/Group
Pollution	Hydrogen Sulfide	Pollution Control	13B
Assessments	Thiols	Stationary Sources	14B
Coal Gasification	Ammonia	Lurgi Process	13H
Lignite		Phenosolvan	21D
Carbon Monoxide			07B
Benzene			07C

18. DISTRIBUTION STATEMENT Release to Public	19. SECURITY CLASS *(This Report)* Unclassified	21. NO. OF PAGES 141
	20. SECURITY CLASS *(This page)* Unclassified	22. PRICE

EPA Form 2220-1 (9-73)