United States
Environmental Protection
Agency

Industrial Environmental Research
Laboratory
Cincinnati OH 45268

EPA-600/7-79-254
December 1979

Research and Development

EPA

Oil Pollution Abstracts

Volume 6, No. 2 (April 1979-June 1979)

Interagency Energy/Environment R&D Program Report

RESEARCH REPORTING SERIES

Research reports of the Office of Research and Development, U.S. Environmental Protection Agency, have been grouped into nine series. These nine broad categories were established to facilitate further development and application of environmental technology. Elimination of traditional grouping was consciously planned to foster technology transfer and a maximum interface in related fields. The nine series are:

1. Environmental Health Effects Research
2. Environmental Protection Technology
3. Ecological Research
4. Environmental Monitoring
5. Socioeconomic Environmental Studies
6. Scientific and Technical Assessment Reports (STAR)
7. Interagency Energy-Environment Research and Development
8. "Special" Reports
9. Miscellaneous Reports

This report has been assigned to the INTERAGENCY ENERGY-ENVIRONMENT RESEARCH AND DEVELOPMENT series. Reports in this series result from the effort funded under the 17-agency Federal Energy/Environment Research and Development Program. These studies relate to EPA's mission to protect the public health and welfare from adverse effects of pollutants associated with energy systems. The goal of the Program is to assure the rapid development of domestic energy supplies in an environmentally-compatible manner by providing the necessary environmental data and control technology. Investigations include analyses of the transport of energy-related pollutants and their health and ecological effects; assessments of, and development of, control technologies for energy systems; and integrated assessments of a wide range of energy-related environmental issues.

This document is available to the public through the National Technical Information Service, Springfield, Virginia 22161.

EPA-600/7-79-254
December 1979

OIL POLLUTION ABSTRACTS

Volume 6, Number 2
(April 1979 - June 1979)

by

Helmut Ehrenspeck, Barbara Searles, Katherine Osteryoung
and David Bonvouloir
Marine Science Institute
University of California
Santa Barbara, California 93106

Principal Investigator

Dr. Henry W. Offen, Director
Marine Science Institute

Grant No. R-805803

Project Officer

L. T. McCarthy, Jr.
Oil & Hazardous Materials Spills Branch
Industrial Environmental Research Laboratory
Edison, New Jersey 08817

INDUSTRIAL ENVIRONMENTAL RESEARCH LABORATORY
OFFICE OF RESEARCH AND DEVELOPMENT
U.S. ENVIRONMENTAL PROTECTION AGENCY
CINCINNATI, OHIO 45268

DISCLAIMER

This report has been reviewed by the Industrial Environmental Research Laboratory-Cincinnati, U.S. Environmental Protection Agency, and approved for publication. Approval does not signify that the contents necessarily reflect the views and policies of the U.S. Environmental Protection Agency, nor does mention of trade names or commercial products constitute endorsement or recommendation for use.

FOREWORD

When energy and material resources are extracted, processed, converted, and used, the related pollutional impacts on our environment and even on our health often require that new and increasingly more efficient pollution control methods be used. The Industrial Environmental Research Laboratory - Cincinnati (IERL-Ci) assists in developing and demonstrating new and improved methodologies that will meet these needs both efficiently and economically.

This report is a product of the above efforts. It cites current literature, research, patents, and other materials relevant to the oil pollution abatement program and is published in an abstract format on a quarterly basis. As such, it serves as a basic reference document for all those interested in oil spill and oil pollution control. This project is part of the continuing program of the Oil and Hazardous Materials Spills Branch, IERL-Ci, to assess and mitigate the environmental impact of oil pollution.

David G. Stephan
Director
Industrial Environmental Research Laboratory
Cincinnati

ABSTRACT

OIL POLLUTION ABSTRACTS (formerly entitled OIL POLLUTION REPORTS) is a quarterly compilation of current literature and research project summaries. Comprehensive coverage of oil pollution and its prevention and control is provided, with emphasis on the aquatic environment. This issue contains bibliographic citations with abstracts of scientific and technical publications and patents covering the years 1976 to 1979. The literature and research entries are arranged in eight major categories comprised of thirty-seven specific sub-categories. A permuted Subject Keyword Index provides access to every entry, and author and patent indexes are included. This report is submitted in partial fulfillment of EPA Grant No. R-805803-01 by the Marine Science Institute, University of California, Santa Barbara, under the sponsorship of the US Environmental Protection Agency.

OIL POLLUTION ABSTRACTS - TOPICAL OUTLINE

A. OIL POLLUTION DETECTION AND EVALUATION
   1. Detection and Monitoring
   2. Remote Sensing
   3. Sampling and Analysis
   4. Source Identification

B. OIL POLLUTION PREVENTION AND CONTROL
   1. Containment
   2. Cleanup and Removal
   3. Environmental Restoration
   4. Personnel Training
   5. Contingency Planning
   6. Legal and Regulatory Aspects
   7. General Prevention and Control Measures

C. ENVIRONMENTAL IMPACTS OF OIL POLLUTION
   1. Biological Aspects
   2. Physical and Chemical Aspects
   3. Social and Economic Aspects
   4. Environmental Response and Recovery
   5. Baseline and Environmental Impact Studies
   6. Legal and Regulatory Aspects
   7. General Aspects

D. FATE OF OIL IN THE ENVIRONMENT
   1. Biodegradation
   2. Physical and Chemical Processes
   3. Models, Simulations, and Predictions
   4. General Fate of Oil

E. POLLUTION ASPECTS OF OIL EXPLORATION, DEVELOPMENT & PRODUCTION
   1. Biological Aspects
   2. Physical and Chemical Aspects
   3. Social and Economic Aspects
   4. Legal and Regulatory Aspects
   5. General Aspects

F. POLLUTION ASPECTS OF OIL TRANSPORT, TRANSFER AND STORAGE
   1. Tankers and Ships
   2. Pipelines
   3. Loading and Offloading Facilities
   4. Storage Facilities
   5. Legal and Regulatory Aspects
   6. General Aspects

G. PETROLEUM & PETROCHEMICAL INDUSTRY WASTE TREATMENT & DISPOSAL
   1. Waste Treatment and Disposal Methods
   2. Oil-Water Separation
   3. Waste Oil Reclamation and Reuse
   4. Legal and Regulatory Aspects

H. MISCELLANEOUS

CONTENTS

	Page
Abstract	iv
Topical Outline	v
Acknowledgements	x
Introduction	xi
Serials Listings	xii
Abbreviations - Acronyms	xiii

I. Reports, Publications, and Patents

A. OIL POLLUTION DETECTION AND EVALUATION
1. Detection and Monitoring 1
2. Remote Sensing 3
3. Sampling and Analysis 6
4. Source Identification 13

B. OIL POLLUTION PREVENTION AND CONTROL
1. Containment 16
2. Cleanup and Removal 24
3. Environmental Restoration 35
4. Personnel Training 36
5. Contingency Planning 37
6. Legal and Regulatory Aspects 48
7. General Prevention and Control Measures 52

C. ENVIRONMENTAL IMPACTS OF OIL POLLUTION
1. Biological Aspects 58
2. Physical and Chemical Aspects 76
3. Social and Economic Aspects 77
4. Environmental Response and Recovery 79
5. Baseline and Environmental Impact Studies 82
6. Legal and Regulatory Aspects 85
7. General Aspects 89

D. FATE OF OIL IN THE ENVIRONMENT
1. Biodegradation 97
2. Physical and Chemical Processes 99
3. Models, Simulations, and Predictions 103
4. General Fate of Oil 111

Page

E. POLLUTION ASPECTS OF OIL EXPLORATION, DEVELOPMENT, AND PRODUCTION
1. Biological Aspects 117
2. Physical and Chemical Aspects 117
3. Social and Economic Aspects 117
4. Legal and Regulatory Aspects 118
5. General Aspects 120

F. POLLUTION ASPECTS OF OIL TRANSPORT, TRANSFER, AND STORAGE
1. Tankers and Ships 128
2. Pipelines 129
3. Loading and Offloading Facilities 130
4. Storage Facilities 131
5. Legal and Regulatory Aspects 131
6. General Aspects 134

G. PETROLEUM AND PETROCHEMICAL INDUSTRY WASTE TREATMENT AND DISPOSAL
1. Waste Treatment and Disposal Methods 135
2. Oil-Water Separation 137
3. Waste Oil Reclamation and Reuse 137
4. Legal and Regulatory Aspects 138

H. MISCELLANEOUS 139

II. Current Research Projects 142

A. OIL POLLUTION DETECTION AND EVALUATION
1. Detection and Monitoring 143
2. Remote Sensing 145
3. Sampling and Analysis 147
4. Source Identification 148

B. OIL POLLUTION PREVENTION AND CONTROL
1. Containment 150
2. Cleanup and Removal 151
3. Personnel Training 153
4. Contingency Planning 154
5. General Prevention and Control Measures 154

C. ENVIRONMENTAL IMPACTS OF OIL POLLUTION
1. Biological Aspects 155
2. Baseline and Environmental Impact Studies 163
3. General Aspects 167

Page

D. FATE OF OIL IN THE ENVIRONMENT
1. Biodegradation 171
2. Physical and Chemical Processes 174
3. Models, Simulations, and Predictions 175
4. General Fate of Oil 177

E. POLLUTION ASPECTS OF OIL EXPLORATION, DEVELOPMENT, AND PRODUCTION
1. Biological Aspects 179
2. Physical and Chemical Aspects 180

F. POLLUTION ASPECTS OF OIL TRANSPORT, TRANSFER, AND STORAGE
1. Loading and Offloading Facilities 181

G. PETROLEUM AND PETROCHEMICAL INDUSTRY WASTE TREATMENT AND DISPOSAL
1. Waste Treatment and Disposal Methods 182
2. Oil-Water Separation 184

H. MISCELLANEOUS 186

Guide to the Master List of Keywords and the Subject Keyword Index 187

Master List of Keywords 188

Subject Keyword Index 197

Author Index 257

Patent Index 262

Appendix A: Periodicals Reviewed 263

Appendix B: OIL POLLUTION ABSTRACTS Availability and Ordering Information 266

Technical Report Data Page 267

ACKNOWLEDGEMENTS

The authors wish to thank the staff of the Marine Science Institute, the Sciences-Engineering Library, and the Interlibrary Loans office at the University of California, Santa Barbara, for their assistance during the research stages of this project.

INTRODUCTION

OIL POLLUTION ABSTRACTS (formerly OIL POLLUTION REPORTS) is a quarterly abstracting series which reviews scientific and technical publications and research projects to inform readers about current developments in the field of oil pollution. This issue contains summaries of articles, reports, books, conference papers, patents, and other literature relating to oil pollution published after 1975 (Section I), and summaries of current research projects (Section II). Subject keyword, author, and patent indexes are included.

Subject coverage encompasses terrestrial and aquatic oil pollution, with emphasis on the marine environment. The citations in Section I are divided into nine major categories which are further divided into thirty-seven specific sub-categories (see p. v). A list of periodicals reviewed in preparing this series appears in Appendix A.

Section II presents titles of active or recently completed oil pollution research projects, summaries of project objectives, and information on the current status and publications resulting from the projects.

Each entry is provided with several descriptive terms selected from a controlled master list of approximately 400 keywords (see p. 188), and, if necessary, one or more specific free-language terms prefaced by an asterisk (*). The groups of keywords for each entry are alphabetically permuted by computer to form the Subject Keyword Index, permitting rapid access to every entry. OIL POLLUTION ABSTRACTS ordering information is included as Appendix B.

OIL POLLUTION ABSTRACTS*

Issues currently available, in press, or in preparation

*This series was formerly entitled:
OIL POLLUTION REPORTS (1978: Vol. 5, No. 2 to Vol. 5, No. 4)
OIL SPILL AND OIL POLLUTION REPORTS (1974 to 1978: Vol. 5, No. 1)

	DATES COVERED	REPORT NUMBER
1974	July 74 - Oct. 74	EPA-670/2-75-003
1975	Nov. 74 - Feb. 75	EPA-670/2-75-044
1975	Feb. 75 - Apr. 75	EPA-670/2-75-059
1975	May 75 - July 75	EPA-600/2-76-129
1975	Aug. 75 - Oct. 75	EPA-600/2-76-113
1976	Nov. 75 - Jan. 76	EPA-600/2-76-185
1976	Feb. 76 - Apr. 76	EPA-600/2-76-215
1976	May 76 - July 76	EPA-600/2-76-266
1976	Aug. 76 - Oct. 76	EPA-600/2-77-037
1977	Nov. 76 - Jan. 77	EPA-600/2-77-075
1977	Feb. 77 - Apr. 77	EPA-600/2-77-111
1977	May 77 - July 77	EPA-600/2-77-243
1977	Aug. 77 - Oct. 77	EPA-660/2-78-005
Vol. 5, No. 1	Nov. 77 - Jan. 78	EPA-600/2-78-071
Vol. 5, No. 2	Feb. 78 - May 78	EPA-600/7-78-160
Vol. 5, No. 3	June 78 - Sep. 78	EPA-600/7-78-218
Vol. 5, No. 4	Oct. 78 - Dec. 78	EPA-600/7-79-040
Vol. 6, No. 1	Jan. 79 - Mar. 79	Submitted 4/79
Vol. 6, No. 2	Apr. 79 - June 79	Submitted 7/79
Vol. 6, No. 3	July 79 - Sept 79	To be submitted 10/79

For complete ordering information, please see Appendix B.

ABBREVIATIONS/ACRONYMS

atm	atmosphere
bbl	barrel
C	carbon
°C	degrees Centigrade
cm	centimeter
COW	crude oil washing
DWP	deepwater port
dwt	dead weight ton
EIS	environmental impact statement
F	degrees Fahrenheit
ft	foot
g	gram
gal	gallon
GC	gas chromatography
GLC	gas-liquid chromatography
gpd	gallons per day
gph	gallons per hour
gpm	gallons per minute
ha	hectare
hr	hour
in	inch
IR	infrared
kg	kilogram
km	kilometer
kn	knot
L	liter
lb	pound
LC	liquid chromatography
LD	lethal dose
LNG	liquefied natural gas
LOT	load on top
LPG	liquefied petroleum gas
m	meter
mg	milligram
mi	mile
min	minute
ml	milliliter
mm	millimeter
MS	mass spectrometry
N	nitrogen
N.A.	not available
O	oxygen
OCS	outer continental shelf
OPA	OIL POLLUTION ABSTRACTS, formerly OIL POLLUTION REPORTS
oz	ounce
PAH	polycyclic aromatic hydrocarbon
pH	the negative log of the H ion concentration
ppb	parts per billion
ppm	parts per million
SBT	segregated ballast tank
sp.	species
TLC	thin-layer chromatography
UK	United Kingdom
US	United States
USSR	Union of Soviet Socialist Republics
UV	ultraviolet
VLCC	very large crude carrier
vs	versus
WSF	water soluble fraction
wt	weight
yr	year
μ	micron
g	microgram
%	percent
/	per
~	approximately
>	greater than
<	less than

ABBREVIATIONS/ACRONYMS (continued)

API	American Petroleum Institute
ASTM	American Society for Testing and Materials
BLM	Bureau of Land Management
CEQ	Council on Environmental Quality
DOE	Department of Energy
EPA	Environmental Protection Agency
ERDA	Energy Research and Development Administration
FAO	Food and Agricultural Organization
FEA	Federal Energy Administration
IMCO	International Maritime Consultative Organization
NASA	National Aeronautics and Space Administration
NBS	National Bureau of Standards
NOAA	National Oceanic and Atmospheric Administration
NTIS	National Technical Information Service
OHMSETT	Oil and Hazardous Materials Simulated Environmental Test Tank
SSIE	Smithsonian Science Information Exchange
UN	United Nations
UNEP	United Nations Environment Program
UNESCO	United Nations Educational, Scientific and Cultural Organization
USCG	United States Coast Guard
USDA	United States Department of Agriculture
USDI	United States Department of the Interior
USFWS	US Fish and Wildlife Service
USGS	United States Geological Survey
USN	United States Navy

SECTION I

REPORTS, PUBLICATIONS, AND PATENTS

A. OIL POLLUTION DETECTION AND EVALUATION

1. Detection and Monitoring

79B-0343
BIOLOGICAL MONITORING OF SEDIMENTS IN EKOFISK OILFIELD
Addy, J.M., D. Levell, and J.P. Hartley. 1978.
Conference on Assessment of Ecological Impacts of Oil Spills, Keystone, Colorado, 14-17 June 1978. American Institute of Biological Sciences, 1978. p. 514-539.

Monitoring, Benthos, Invertebrates, Offshore development, Oil fields, North Sea

A biological monitoring scheme for the title area was initiated in 1973, based on intensive quantitative sampling of the benthic macrofaunal community close to the installations. The observed changes in community structure are believed to be due to industrial activity in the area; oil pollution and other factors such as mechanical disturbance and domestic waste are considered. The authors conclude that the methods used are adequate to detect and measure the spatial extent of changes which have occurred in the benthic macrofauna.

79B-0344
PROBLEMS IN ECOLOGICAL MONITORING IN PORT VALDEZ, ALASKA
Cowell, E.B., and D.C. Monk. 1979.
1979 Oil Spill Conference (Prevention, Behavior, Control, Cleanup), Los Angeles, 19-22 March 1979. Washington, DC, American Petroleum Institute, 1979. p. 713-717. (API Publication No. 4308)

Monitoring, Baseline studies, Marine organisms, Ecosystems, Environmental effects, Algae, Development, Alaska

A major problem in understanding impacts of oil exploration and development in Alaska is the lack of specific baseline data about the rocky shore ecosystem and natural stresses controlling temporal and spatial variations in populations. Eleven transect sites were evaluated for selected species abundance which were either an important community component or particularly sensitive to oil pollution. Findings confirmed taxonomic deficiencies and lack of ecosystem understanding, but provided sufficient data for future development sites.

A. OIL POLLUTION DETECTION AND EVALUATION

79B-0345
CILIATES AS BIOINDICATORS OF OIL POLLUTION
Lanier, J.J., and M. Light. 1978.
Conference on the Assessment of Ecological Impacts of Oil Spills, Keystone, Colorado, 14-17 June 1978. American Institute of Biological Sciences, 1978. p. 651-676.

Bioindicators, Detection, Microorganisms, Source identification, Uptake, Toxicity, Contamination, Concentrations, *Protozoans

Oil uptake, toxicity, and community diversity experiments were conducted with members of the marine macrofaunal community, primarily ciliate protozoa, in an investigation of their potential use as biological indicators of oil pollution. The results to date support the use of protozoa as bioindicators; the pollutant can be detected and, to some extent, fingerprinted, within the organism. The amount of oil in the protozoa can probably be related to concentration and time of exposure.

79B-0346
INQUIRY INTO THE SUITABILITY OF PROTOZOA AS BIOLOGICAL INDICATORS OF OIL POLLUTION
Lanier, J.J., and M. Light. 1978.
Report CG-D-83-78. 45 p. Final Report.

Bioindicators, Detection, Microorganisms, Contamination, Toxicity, Concentrations, Uptake, *Protozoans, *Euplotes diadaleos

The title study was conducted by measuring oil uptake rates and oil toxicity for the marine ciliate protozoan Euplotes diadaleos. The study concludes that protozoans as suitable bioindicators of oil pollution is worthy of further investigation because (1) they ingest oil at quantifiable rates, (2) they are resistant to relatively high concentrations of oil for short periods of time, and (3) their population numbers are responsive to the presence of oil. Recommendations are made on further research necessary to confirm the suitability of protozoans as bioindicators.

79B-0347
COMPARISON OF HYDROCARBONS IN BENTHIC FISH FROM COAL OIL POINT AND TANNER BANK, CALIFORNIA
Rossi, S.S., G.W. Rommel, and A.A. Benson. 1979.
1979 Oil Spill Conference (Prevention, Behavior, Control, Cleanup), Los Angeles, 19-22 March 1979. Washington, DC, American Petroleum Institute, 1979. p. 573-577. (API Publication No. 4308)

Bioindicators, Fish, Hydrocarbons, Chemical analysis, Chromatography, Distribution, Sediments, Benthos, Natural seepage, OCS, California, Santa Barbara Channel

A. OIL POLLUTION DETECTION AND EVALUATION

Glass capillary gas chromatography was used for analysis of hydrocarbons extracted from rockfish and sanddabs (Citharichthys sp.) taken from the title areas. Fish from the Coal Oil Point natural seepage area contained higher levels of hydrocarbons than those from Tanner Bank, an area located 140 km offshore. Two features characteristic of petroleum, unresolved complex mixtures and branched alkanes, were more prevalent in Coal Oil Point animals. Petrogenic characteristics were absent from the resolvable hydrocarbons, indicating that contamination was probably by low levels of weathered petroleum. "Use of benthic fishes as indicators of petroleum mobility within continental shelf water (sediments) is encouraged by the present results."

79B-0348
OIL POLLUTION IN THE BALTIC SEA. A CHEMICAL ANALYTICAL SEARCH FOR MONITORING METHODS
Rudling, L. 1976.
Stockholm, Swedish Nature Conservancy, 1976. 80 p. (Report PM 783)

Monitoring, Chemical analysis, Baltic Sea

Summary not available.

[from Marine Pollution Research Titles 5(4):#621. 1978]

2. Remote Sensing

79B-0349
AIRBORNE OIL SPILL SURVEILLANCE SYSTEMS IN SWEDEN
Backlund, L. 1979.
1979 Oil Spill Conference (Prevention, Behavior, Control, Cleanup), Los Angeles, 19-22 March 1979. Washington, DC, American Petroleum Institute, 1979. p. 305-311. (API Publication No. 4308)

Remote sensing, Surveillance, Pollution control, Coastal waters, Tankers, Ships, Equipment, Sweden

Two oil spill surveillance systems, developed for the Swedish Coast Guard and installed on a Cessna 337 aircraft, are described. One of the systems employs a side looking airborne radar, and the other, a Daedalus infrared/utraviolet line scanner. Both systems include a Decca tactical air navigational system and a camera system. Field tests on the two systems have been conducted, and both will be gradually put into use for coastal surveillance.

A. OIL POLLUTION DETECTION AND EVALUATION

79B-0350
AN ONGOING ASSESSMENT OF THE USE OF SPACE TECHNOLOGY IN MONITORING OIL SPILLS
Croswell, W.F. 1979.
1979 Oil Spill Conference (Prevention, Behavior, Control, Cleanup), Los Angeles, 19-22 March 1979. Washington, DC, American Petroleum Institute, 1979. p. 313-316. (API Publication No. 4308)

Remote sensing, Surveillance, Monitoring, Pollution control, Models, Government agencies, *NASA, *Satellites

A variety of research efforts, including laboratory studies, aircraft missions, and spacecraft studies, conducted by NASA with the cooperation of several US federal agencies and the Canadian government, are described. These studies will assess the potential use of space technology for the detection of oil spills and ocean pollution. Initial results of the required assessment are expected by the end of 1979.

79B-0351
CANADA'S GUARDIAN ANGEL
Dotto, L. 1979.
Remote Sensing in Canada 7(1):19-20.

Remote sensing, Monitoring, Tankers, Offshore development, Coastal waters, Surveillance, Arctic, Oil slicks, Sources, *SURSAT satellite system

Tracking of oil slicks, surveillance of tankers carrying oil, and monitoring of drilling activity in the Arctic and coastal waters would be among the numerous functions of the proposes SURSAT satellite remote sensing system. SURSAT would provide Canada with the capability of enforcing its policies in the 200 mile coastal zone to which it lays claim.

79B-0352
REMOTE SENSING OF ESTUARINE FRONTS AND THEIR EFFECTS ON POLLUTANTS
Klemas, V., and D.F. Polis. 1977.
Photogrammetric Engineering and Remote Sensing 43(5):599-612.

Remote sensing, Spreading, Drift, Movement, Models, Oil slicks, Estuaries, Surveillance, Delaware Bay, *Estuarine fronts

Aircraft, satellites, and boats were used to study the behavior of different types of fronts in Delaware Bay and their effect on pollutants in order to provide a basis for improving an oil drift and spreading model. LANDSAT imagery provided the most effective means of determining the location and extent of frontal systems over all parts of the tidal cycle.

A. OIL POLLUTION DETECTION AND EVALUATION

79B-0353
RADAR DETECTION OF SURFACE OIL SLICKS
Kraus, S.P., J.E. Estes, S.G. Atwater, J.R. Jensen, and R.R. Vollmers. 1977.
Photogrammetric Engineering and Remote Sensing 43(12):1523-1532.

Remote sensing, Detection, Natural seepage, Oil slicks, Platforms, Surveillance, Equipment, USCG, California, Santa Barbara Channel, *Radar systems

As part of a program to develop an all-weather, day/night airborne surveillance system for the US Coast Guard, a number of controlled tests were conducted off Southern California in May 1976, to evaluate the oil slick and surface target detection capabilities of two Motorola side-looking radar systems. Targets imaged included natural seeps, simulated oil spills, oil production platforms, and other man-made or natural features. An analysis of imagery from the coincident radar runs indicates that the synthetic-aperture coherent-on-receive (COR) system provided better detection of natural and man-made oil slicks, whereas the real-aperture AN/APS-940 system consistently exhibited higher target resolution results.

79B-0354
PHOTOGRAPHIC ANALYSIS OF WATER QUALITY CHANGES
Lo, C.P. 1976.
Photogrammetric Engineering and Remote Sensing 42(3):309-315.

Remote sensing, Environmental deterioration, Sources, Detection, Oil discharges, Water quality, *Hong Kong

Aerial photographs taken of Rambler Channel, Hong Kong in 1956 and 1975 were compared to assess the impact of the changing environment on the water quality. Among sources of pollution contributing to the changes are oil residues left by boats and junks. The study attests to the effectiveness of aerial photography in detecting and mapping sources and patterns of water pollution.

79B-0355
REMOTE SENSING APPLIED TO THE PREVENTION AND THE STRUGGLE AGAINST POLLUTION BY HYDROCARBONS
Massin, J.M. 1978.
Revue Internationale d'Oceanographie Medicale, Vol. 50:21-30.

Remote sensing, Analytical technicques, Movement, Monitoring, Surveillance, Hydrocarbons, Spill trajectories, Sea surface

Sea movement caused by currents, tides, local winds, sea winds, swell, and Coriolis movement makes weekly analysis at some remote sensing stations inaccurate. Statistical evaluation assumes a great number of analyses are taken at a single station over an extended period of time.

A. OIL POLLUTION DETECTION AND EVALUATION

79B-0356
REPORT ON THE REMOTE SENSING OF OIL SPILLS IN THE BEAUFORT SEA
Norcor Engineering and Research. 197_?
Yellowknife, Northwest Territories, Norcor Engineering and Research, 197_? 26 p.

Remote sensing, Oil spills, Surveillance, Equipment, Beaufort Sea

Summary not available.

[from Marine Pollution Research Titles 5(4):#620. 1978]

79B-0357
THE AIREYE REMOTE SENSING SYSTEM FOR OIL SPILL SURVEILLANCE
White, J.R., R.E. Schmidt, and W.E. Plage. 1979.
1979 Oil Spill Conference (Prevention, Behavior, Control, Cleanup), Los Angeles, 19-22 March 1979. Washington, DC, American Petroleum Institute, 1979. p. 301-304. (API Publication No. 4308)

Remote sensing, Monitoring, Surveillance, USCG, Law enforcement, Pollution control, Tankers, Ships, Equipment, *Aireye system

An airborne, real-time, all-weather, day/night remote sensing system designated "Aireye," is being developed by the US Coast Guard. The system will be installed on 6 Falcon 20G jet aircraft and will include a side-looking airborne radar, a two-channel infrared/ultraviolet line scanner, an aerial reconnaissance camera, an airborne data annotation system, and a control, display and record console. The sensor will be capable of detecting and identifying polluting ships at night and "will produce annotated, hard copy imagery suitable for prosecution of polluting vessels."

3. Sampling and Analysis

79B-0358
CHEMICAL ANALYSIS OF WATER SAMPLES FROM MESO SCALE TANKS
Ahmadjian, M., M. Brady, C. Brown, D. Goldfarb, and P. Lynch. 1978. Assessment of Treated vs. Untreated Spills (Interim Report). M.P. Wilson, University of Rhode Island Report HCP/W4047-02, Contract No. E(11-1) 4047. 38 p.

Sampling, Chemical analysis, Hydrocarbons, Dispersants, Dispersions

Two large (4000 L) tanks are currently being used to measure the dispersion of oil and dispersant-treated oil into the water column. This paper describes the tank facilities and details four experiments

to analyze water samples from surface, middle and bottom waters in the tank, after the tanks were supplied with oil or oil/dispersant mixtures. The four experiments were considered too preliminary to draw any definitive conclusions.

79B-0359
METHODS OF SAMPLE PREPARATION FOR ENVIRONMENTAL TRACE ANALYSIS BY GAS CHROMATOGRAPHY
Averill, W. 1978.
Chromatography Newsletter 6(1):4-7.

Chemical analysis, Chromatography, *Trace analysis

"A review with 49 references." [possibly oil pollution related]

[from Chemical Abstracts 88(26):#196508f. 1978]

79B-0360
A CHEMICAL ASSESSMENT OF THE PRESENT LEVELS AND SOURCES OF HYDROCARBON POLLUTANTS IN THE GEORGES BANK REGION
Boehm, P.D., W.G. Steinhauer, D.L. Fiest, N. Mosesman, et al. 1979.
1979 Oil Spill Conference (Prevention, Behavior, Control, Cleanup), Los Angeles, 19-22 March 1979. Washington, DC, American Petroleum Institute, 1979. p. 333-341. (API Publication No. 4308)

Chemical analysis, Hydrocarbons, Biogenic hydrocarbons, PAH, GC/MS, WSF, Sea surface, Sediments, Benthos, Marine organisms, Zooplankton, Sources, Tankers, Argo Merchant spill, Georges Bank

The title study was conducted over 5 seasons and included hydrocarbon analyses of the dissolved, particulate, and surface microlayer fractions of the water column, zooplankton, surface sediments, and benthic organisms in the Georges Bank area. Seasonal variations in the hydrocarbon distribution were found. Anthropogenic compounds were evident in all sample types except zooplankton. The presence of petroleum hydrocarbons in the edible sea scallop, Placopecten magellanicus, and ocean quahog, Arctica islandica, commonly harvested in the region, was significant. Sources of input of petrogenic compounds include operational discharges from tankers and the Argo Merchant spill.

A. OIL POLLUTION DETECTION AND EVALUATION

79B-0361
OIL TAINTING OF FISH, A LABORATORY TEST ON SALMON AND SAITHE
Brandal, P.O., O. Grahl-Nielsen, O. Neppelberg, T. Palmork, et al. 1976.
ICES C. M. Pap. Rep., No. E:33. 6 p.

Chemical analysis, Sampling, Contamination, Fish, *Salmon, *Saithe, *Oil tainting

Summary not available.

[from Marine Pollution Research Titles 4(6):#1041. 1977]

79B-0362
PROCEDURES FOR QUALITATIVE AND QUANTITATIVE ANALYSIS OF HYDROCARBONS EXTRACTED FROM TREATED AND UNTREATED SPILLS
Brown, C., P. Lynch, and M. Ahmadjian. 1978.
Assessment of Treated vs. Untreated Spills (Interim Report). M.P. Wilson, University of Rhode Island Report HCP/W4047-02, Contract No. E(11-1) 4047. 38 p.

Analytical techniques, Spectroscopy, Hydrocarbons, Dispersants, Oil spills, Chemical analysis

The title laboratory procedures utilize infrared analysis, with carbon disulfide as an extracting solvent, to quantitatively and qualitatively analyze petroleum hydrocarbons from spills. For spills treated with chemical dispersants, laboratory methods had to be designed and tested. This paper describes the development of such methods and the applications of computer software to analyses of the obtained infrared spectra.

79B-0363
MEASUREMENT AND INTERPRETATION OF HYDROCARBONS IN THE PACIFIC OCEAN
Brown, R.A., T.D. Searl, and C.B. Koons. 1976.
Boulder, Colorado, National Oceanic and Atmospheric Administration, 1976. 246 p. (NOAA Data Report ERL MESA-19)

Hydrocarbons, Concentrations, Detection, Chemical analysis, Pacific Ocean

Summary not available.

[from Marine Pollution Research Titles 4(7):#1195. 1977]

79B-0364
SAMPLING HYDROCARBONS IN POLLUTED WATER. BIBLIOGRAPHICAL REVIEW, SAMPLER, ANNOTATIONS [English summary]
Carsin, J.L. 1977.
Revue Internationale d'Oceanographie Medicale, Vol. 48:77-86.

Sampling, Analytical techniques, Monitoring, Surveillance, Equipment, Chemical analysis, Spectrometry, Bibliographies

A. OIL POLLUTION DETECTION AND EVALUATION

Following a brief summary of oil pollution sampling probes, this article describes a new device where a floating sampler draws polluted water which is strained through polyurethane foam. IR spectrometry is used to analyze the samples. Efficiency of the new probe was demonstrated in sea tests under various weather conditions.

79B-0365
DETECTORS FOR LIQUID CHROMATOGRAPHIC ANALYSIS FOR POLYNUCLEAR AROMATIC HYDROCARBONS
Christensen, R.G., and W.E. May. 1978.
Journal of Liquid Chromatography 1(3):385-399.

Detection, PAH, Analytical techniques, Chromatography, Chemical analysis, *UV photometry

"A number of liquid chromatographic detectors of various types were evaluated for both selectivity and sensitivity for the detection of PAH. Detection limits for fixed and variable wavelength UV photometers, filter fluorometers, and spectrofluorometers were determined. The utility of each of these types of detectors for use in the reversed-phase high-performance liquid chromatographic analysis of environmental extracts containing trace levels of PAH is discussed." [possibly oil pollution related]

[from Chemical Abstracts 89(8):#7074u. 1978]

79B-0366
COLLECTION AND ANALYSIS OF TREATED AND UNTREATED OIL SPILL VAPORS
Goldfarb, D., and C. Brown. 1978.
Assessment of Treated vs. Untreated Spills (Interim Report). M.P. Wilson, University of Rhode Island Report HCP/W4047-02, Contract No. E(11-1) 4047. 84 p.

Chemical analysis, Sampling, Dispersants, Oil spills, Evaporation, Hydrocarbons, *Oil spill vapors

Collection and analysis of air samples can be successfully used as a method for measuring evaporation rates of oil components. In laboratory experiments, the application of the dispersant Corexit 9527 to spilled oil, followed by agitation of the water under the spill resulted in significantly slower evaporation rates for the light n-alkanes (n-C_7 to n-C_{10}). Comparisons of evaporation rates of treated and untreated oil spills are presented.

A. OIL POLLUTION DETECTION AND EVALUATION

79B-0367
PETROLEUM HYDROCARBONS IN THE NORTH SEA
Grahl-Nielsen, O., K. Westrheim, and S. Wilhelmsen. 1979.
1979 Oil Spill Conference (Prevention, Behavior, Control, Cleanup), Los Angeles, 19-22 March 1979. Washington, DC, American Petroleum Institute, 1979. p. 629-632. (API Publication No. 4308)

Hydrocarbons, Concentrations, Detection, Sampling, Distribution, Chromatography, Chemical analysis, North Sea

Using water samples taken since 1976 at depths from 1 m to 100 m by a special water sampler, test results from capillary gas chromatography indicate very low levels of non-volatile petroleum hydrocarbons in the North Sea.

79B-0368
C_{15+} HYDROCARBONS IN THE SEDIMENTS OF THE NEW YORK BIGHT
Koons, C.B., and J.P. Thomas. 1979.
1979 Oil Spill Conference (Prevention, Behavior, Control, Cleanup), Los Angeles, 19-22 March 1979. Washington, DC, American Petroleum Institute, 1979. p. 629-632. (API Publication No. 4308)

Hydrocarbons, Distribution, Sampling, Concentrations, Sediments, Harbors, OCS, New York

The abundance of C_{15+} hydrocarbons from New York Harbor, the Hudson River, and across the continental shelf to the rise was documented in this study using a multiple corer, a bottom grab, and the submersible vessel Alvin as collectors. Concentrations were highest in areas most impacted by man; harbor sediments, dredge spoil, and sewer sediments showed 3000-6000 ppm, while continental shelf areas and continental rise areas showed 80 ppm and 40 ppm, respectively.

79B-0369
SUPPLY OF POLLUTANTS TO KAGOSHIMA BAY AND PRESENT CONDITION OF THE WATER QUALITY OF SEA WATER IN THE BAY
Onishi, T., M, Kamada, and H. Sakamoto. 1976.
Kagoshima Daigaku Rika Hokaku, Vol. 25:69-132.

Water quality, Contaminants, Sources, Chemical analysis, Bays, Japan

Summary not available. [possibly oil pollution related]

[from Chemical Abstracts 87(8):#58222m. 1977]

A. OIL POLLUTION DETECTION AND EVALUATION

79B-0370
CHEMICAL CHARACTERIZATION OF MOUSSE AND SELECTED ENVIRONMENTAL SAMPLES FROM THE AMOCO CADIZ OIL SPILL
Overton, E.B., J.R. Patel, and J.L. Laseter. 1979.
1979 Oil Spill Conference (Prevention, Behavior, Control, Cleanup), Los Angeles, 19-22 March 1979. Washington, DC, American Petroleum Institute, 1979. p. 169-174. (API Publication No. 4308)

Chemical analysis, Sampling, PAH, Aromatic hydrocarbons, Oxidation, Uptake, Marine Organisms, Sediments, Amoco Cadiz spill, GC/MS, *Mousse

Mousse, biota, soil, sediment and reference mousse (collected immediately adjacent to the Amoco Cadiz wreck) samples were collected during and shortly after the spill and analyzed by high resolution gas chromatography and GC/MS techniques. Abundant quantities of alkylated polynuclear aromatic hydrocarbons (PAHs) were noted. For the most part, the oil comprising the mousse was not heavily weathered. Organisms had accumulated large quantities of PAHs in their tissues. The spilled oil showed some evidence of oxidation.

79B-0371
DETERMINATION OF THE OIL CONTENT IN THE BALTIC WATER BY MEANS OF INFRARED SPECTROSCOPY [in German]
Rohde, K.H. 1976.
Seewirtschaft, Vol. 8:115-116.

Chemical analysis, Concentrations, Spectroscopy, Baltic Sea, *IR

Summary not available.

[Marine Pollution Research Titles 4(5):=875. 1977]

79B-0372
APPLICATION OF MASS SPECTROSCOPY TO THE IDENTIFICATION OF EFFLUENTS FROM ENERGY-RELATED INDUSTRIES
Sharkey, A.J. 1976.
Annual Symposium on Recent Advances in the Analytical Chemistry of Pollutants, 6th, Vienna, Austria, 1976. p. -.

Spectroscopy, Chemical analysis, Wastewaters, Industries

Summary not available. [possibly oil pollution related]

A. OIL POLLUTION DETECTION AND EVALUATION

79B-0373
COMPARISON OF TWO METHODS FOR OIL AND GREASE DETERMINATION
Short, J.W., S.D. Rice, and D.L. Cheatham. 1976.
Assessment of the Arctic Marine Environment, Selected Topics. D.W. Hood and D.C. Burrell (eds.). Fairbanks, University of Alaska, Institute of Marine Science, 1976. p. 451-462. (Occasional Publication No. 4)

Analytical techniques, Detection, Toxicity, Concentrations, *Spectrophotometry, *Gravimetric analysis

A comparison is made of two methods for determination of oil pollution levels in discharge waters, a gravimetric method used by government regulatory agencies and infrared spectrophotometry. The gravimetric method is adequate for grease but not for oils. While the gravimetric method is sensitive to the heavier compounds, these have only a casual relationship to acute toxicity. Where it is necessary that oil concentration be correlated with chemical toxicity, the infrared method should be used.

79B-0374
HYDROCARBONS IN SEDIMENTS FROM THE EDGE OF THE BERMUDA PLATFORM
Sleeter, T.D., J.N. Butler, and J.E. Barbash, 1979.
1979 Oil Spill Conference (Prevention, Behavior, Control, Cleanup), Los Angeles, 19-22 March 1979. Washington, DC, American Petroleum Institute, 1979. p. 615-620. (API Publication No. 4308)

Sediments, Hydrocarbons, Concentrations, Tropical regions, Sampling, Coastal waters, Models, Bermuda

Surficial and subsurface (10-13 cm) sediment samples were taken at 17 stations (17 cores) on the northern margin of the Bermuda seamount. Aliphatic hydrocarbon content was low compared to the North Atlantic abyssal plain and 2x lower than typical coastal samples. Concentrations of petroleum hydrocarbons were lower in subsurface than surface samples, and lower outside the reef than inside. Results were quantitatively consistent with a diffusion model.

79B-0375
MANUAL OF METHODS FOR CHEMICAL ANALYSIS OF WATER AND WASTES
US Environmental Protection Agency. 1976.
Report EPA-625-6-74-003a, NTIS Report PB 259 973. xvii + 300 p. (2nd ed.)

Chemical analysis, Analytical techniques, Wastewaters, Detection, Oil-water separation, *IR

The analytical procedures used by EPA laboratories for the examination of ground and surface waters, domestic and industrial waste effluents, and teatment process samples are described. Methods for oil and grease extraction and analysis are included.

A. OIL POLLUTION DETECTION AND EVALUATION

79B-0376
DETERMINATION OF PETROLEUM COMPONENTS IN SAMPLES FROM THE METULA OIL SPILL
Warner, J.S. 1976.
The Metula Oil Spill. C.G. Gunnerson, and G. Peter. 1976. Boulder, Colorado, National Oceanic and Atmospheric Administration, Environmental Research Laboratories, 1976. 60 p. NOAA Special Report. (Appendix B, attached microfiche)

Oil spills, Sampling, Sediments, GC/MS, Weathering, Concentrations, Onshore impacts, Chemical analysis, Biological effects, Metula spill, Strait of Magellan, Chile

Forty-one sediment samples and seven tissue samples were analyzed for petroleum components. CG/MS analysis revealed high concentrations of Metula oil in the samples; the oil differed from the whole oil only by the loss of lower-boiling components, including the toxic benzenes and naphthalenes. "There was no evidence of any significant amount of selective microbiological weathering of normal paraffins."

4. Source Identification

79B-0377
THE LEGAL ASPECTS OF OIL SPILL FINGERPRINTING
Bentz, A.P., and S.L. Smith, Jr. 1979.
1979 Oil Spill Conference (Prevention, Behavior, Control, Cleanup), Los Angeles, 19-22 March 1979. Washington, DC, American Petroleum Institute, 1979. p. 3-6. (API Publication No. 4308)

Source identification, USCG, Chemical analysis, Oil spills, Compensation, Liability

The USCG oil spill identification system can match the chemical characterisitcs of a spill sample with those of a suspected source sample. The system has aided in the successful collection of cleanup costs and civil penalties. The use of the resulting evidence in court supports the conclusion that the system is scientifically and legally sound.

79B-0378
FIELD INFRARED METHOD TO DISCRIMINATE NATURAL SEEPS FROM NONSEEPS
Eastwood, D., and D.F. Grant. 1976.
US Coast Guard Report CG-D-32-77. 25 p.

Source identification, Natural seepage, Weathering, Sampling, Chemical analysis, Analytical techniques, Spectroscropy

A. OIL POLLUTION DETECTION AND EVALUATION

The title study has developed a simple procedure with infrared instrumentation and a minimum of training and sample preparation to discriminate between seep and non-seep oils. It is based on the comparison between the 13.8 μ and 13.5 μ peaks (for both weathered and unweathered oils) and in the carbonyl region at 5.85 μ (for unweathered oils only).

79B-0379
METHODS FOR THE SOURCE IDENTIFICATION AND QUANTIFICATION OF OIL POLLUTION
Frank, U., D. Stainken, and M. Gruenfeld. 1979.
1979 Oil Spill Conference (Prevention, Behavior, Control, Cleanup), Los Angeles, 19-22 March 1979. Washington, DC, American Petroleum Institute, 1979. p. 323-331. (API Publication No. 4308)

Source identification, Analytical techniques, Sampling, Chemical analysis, Hydrocarbons, Chromatography, Spectroscopy, *IR, *UV, *Fluorescence

"This paper presents a concise review of oil analysis methods used by several U.S. agencies, industrial organizations, and standard setting societies. Oil analysis methods published by these organizations are evaluated with regard to their convenience and safety for general laboratory use, ability to yield correct quantification data, and correctness in identifying the presence and source of discharge of petroleum oil pollution. Several procedures also are addressed for isolating individual petroleum fractions and hydrocarbons from environmental samples for the purpose of monitoring for the presence of oil pollution in sediments and tissues."

79B-0380
EVIDENCE OF ARGO MERCHANT CARGO OIL IN MARINE BIOTA BY GLASS CAPILLARY GC ANALYSIS
MacLeod, W.D., Jr., L.C. Thomas, M.Y. Uyeda, and R.G. Jenkins. 1978.
Conference on Assessment of Ecological Impacts of Oil Spills, Keystone, Colorado, 14-17 June 1978. American Institute of Biological Sciences, 1978. p. 137-151.

Source identification, Chromatography, Chemical analysis, Analytical techniques, Hydrocarbons, Fish, Fate, Argo Merchant spill, Massachusetts

Thirty-seven samples of marine biota collected in response to the Argo Merchant oil spill were analyzed for hydrocarbons by the title method. The use of short glass capillaries (2 m) reduced GC analysis times compared to packed columns of comparable resolution (7 min vs 40+ min), and GC analysis on longer columns (20 m) provided extensive detail on hydrocarbon distribution patterns from samples of marine biota and the Argo Merchant cargo. Saturated hydrocarbons from the stomach contents of two cod samples and one windowpane flounder sample compared well with the cargo chromatogram.

A. OIL POLLUTION DETECTION AND EVALUATION

79B-0381
CLASSIFICATION OF OILS BY THE APPLICATION OF PATTERN RECOGNITION TECHNIQUES TO INFRARED SPECTRA
Mattson, J. 1976.
US Coast Guard Report CG-D-6-77. 47 p. (NTIS Report AD-A039 387.)

Source identification, Chemical analysis, Monitoring, Petroleum products, Oil spills

Parametric and nonparametric methods of pattern recognition have been used to group petroleum oils into six classes based solely upon infrared spectral data. A set consisting of 204 crude, lubricating, and fuel oils was correctly classified 82% of the time, and 89% of the oils were correctly assigned using linear discriminant function analysis. A simplified χ^2 test is developed for the "infinite class" problem, i.e., the fingerprinting of an oil spill.

B. OIL POLLUTION PREVENTION AND CONTROL

1. Containment

79B-9382
HYDRO-CARPET OIL SPILLAGE CONTAINMENT AND RECOVERY DEVICE
Amerada Hess Corp. 1978.
US Patent 4,102,789

Spill containment, Spill removal, Oil transfer, Ships, Equipment, Design-engineering, Patent, *Hydro-carpet

A hydro-carpet apparatus for spill containment and recovery of contaminants from spills occurring during oil transfer from a vessel to shore is described. "The apparatus uses a compactly storable and manually pullable and incrementally dispersable elongate floatable hydrocarpet for the downstream containment and recovery of contaminants of oil spills and permitting emergency deployment when required."

[from Underwater Information Bulletin 11(1):#79/02/28. 1979.]

4,102,789
HYDRO-CARPET OIL SPILLAGE CONTAINMENT AND RECOVERY DEVICE
Richard W. Young, Edison, N.J., assignor to Amerada Hess Corporation, Woodbridge, N.J.
Continuation of Ser. No. 747,679, Dec. 6, 1976, abandoned, which is a continuation of Ser. No. 572,538, Apr. 28, 1975, abandoned. This application Jul. 18, 1977, Ser. No. 816,570
Int. Cl.[2] C02B *9/02*
U.S. Cl. 210—252 AS 3 Claims

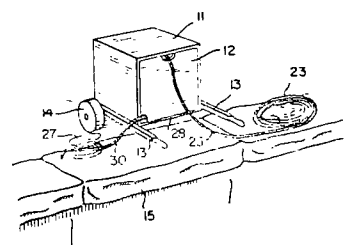

79B-0383
OIL BOOM
British Petroleum Co., Ltd. 1978.
US Patent 4,112,689

Spill containment, Spill removal, Booms, Design-engineering, Equipment, Patent

Each section of this containment boom comprises a flexible buoyant chamber, a ballast water chamber, and a further water containing chamber that is more buoyant than the first. The further water chamber and the buoyant chamber are connected side by side with the ballast chamber. The three chambers are positioned relative to one another "so that when in use on water the buoyant chamber and ballast water chamber together form a barrier for oil spilt in water and the further water chamber defines a weir between itself and the other chambers, this weir being provided with means to remove oil and water therefrom."

[from Underwater Information Bulletin 11(2):#79/04/56. 1979]

B. OIL POLLUTION PREVENTION AND CONTROL

4,112,689
OIL BOOM
Michael Guthrie Webb, Wootton Bridge, England, assignor to The British Petroleum Company Limited, London, England
Filed Aug. 2, 1977, Ser. No. 821,159
Claims priority, application United Kingdom, Aug. 6, 1976, 32804/76
Int. Cl.[2] E02B 15/04
U.S. Cl. 405—63 11 Claims

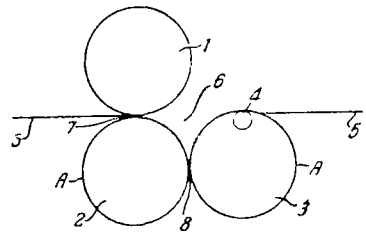

79B-0384
OIL CONTROL SYSTEM
British Petroleum Co., Ltd. 1978.
US Patent 4,123,911

Spill containment, Booms, Ships, Equipment, Design-engineering, Patent

A method is described for deploying an inflatable, flexible, floating oil containment barrier from a support vessel. The barrier is progessively discharged from the support vessel while being inflated. The barrier takes up a closed curved shape away from the vessel, the far end of the barrier is attached to a second support vessel or anchoring point, and the deployed barrier is maintained in an inflated state.

[from Underwater Information Bulletin 11(2):#79/04/62. 1979]

4,123,911
OIL CONTROL SYSTEM
Arthur Finigan, Guildford, and Michael G. Webb, Wootton Bridge, Isle of Wight, both of England, assignors to The British Petroleum Company Limited, London, England
Filed Oct. 14, 1977, Ser. No. 842,164
Claims priority, application United Kingdom, Oct. 20, 1976, 43513/76
Int. Cl.[2] E02B 15/04
U.S. Cl. 405—68 8 Claims

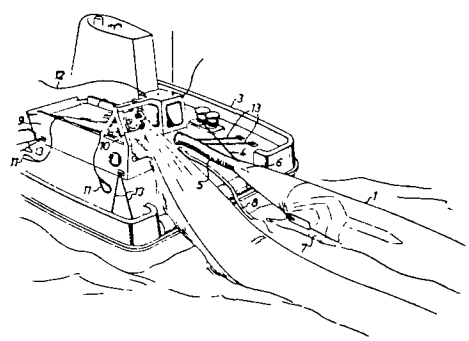

79B-0385
A STUDY ON THE FEASIBILITY OF UNDERWATER CONTAINMENT OF SUBSEA OIL SPILLS IN ARCTIC WATERS
Chen, K.W. 1979.
Spill Technology Newsletter 4(1):37-45.

Spill containment, Blowouts, Spill removal, Arctic, Equipment, OCS, Design-engineering, *Underwater containment

B. OIL POLLUTION PREVENTION AND CONTROL

The title study is based on an investigation of possible responses to three hypothetical blowout scenarios in Canadian Arctic offshore waters, involving water depths to 770 m, and oil and gas flow rates ranging up to 2,400 m^3 and 360,000 m^3, respectively. This paper discusses the currently available or possible technology for: 1) Containing the oil from a deep-water or shallow subsea well blowout, at or near the point of escape, and 2) collecting the oil underwater to prevent it from reaching the sea surface. Described are plastic, metal, and weighted fabric domes.

79B-0386
DEVELOPMENT AND TESTS OF AN AIR-JET OIL BOOM
Cohen, S.H., and W.T. Lindenmuth. 1979.
1979 Oil Spill Conference (Prevention, Behavior, Control, Cleanup), Los Angeles, 19-22 March 1979. Washington, DC, American Petroleum Institute, 1979. p. 483-487. (API Publication No. 4308)

Spill containment, Booms, Oil slicks, Design-engineering, Equipment, EPA, *Performance testing, *OHMSETT facility

"This paper describes the development of the Air-Jet Boom, a novel boom which has the capability to divert oil slicks under wave and current conditions that normally preclude the deployment of conventional booms." Performance tests at EPA's OHMSETT test facility show that the Air-Jet Boom is capable of diverting thin oil slicks (2 mm) in 3-knot currents with a 15% loss when deployed at 30 degrees to the flow. At a 20 degree deployment angle (3 knots) a 3 mm oil slick can be diverted with a 10% loss. Moreover, in the presence of steep four-foot waves, the boom's performance is virtually unchanged.

79B-0387
THE USE OF DEFLECTORS FOR DEPLOYMENT OF OIL BOOMS IN RIVERS
Greene, G.D., A.Z. Brodsky, M.E. Charles, and D. Mackay. 1979.
1979 Oil Spill Conference (Prevention, Behavior, Control, Cleanup), Los Angeles, 19-22 March 1979. Washington, DC, American Petroleum Institute, 1979. p. 411-417. (API Publication No. 4308)

Spill containment, Booms, Rivers, Design-engineering, *Deflectors

Deflectors for aligning booms at an angle to the current in flowing waters were designed and field tested. Agreement was found between the field results and the hydrodynamic theory used to predict the proper angle of deflection. A graphical method has been devised to enable on-scene commanders to calculate the requirements for deflecting a given boom. Practical applications of the deflector-boom systems are discussed.

B. OIL POLLUTION PREVENTION AND CONTROL

79B-0388
GUIDELINES FOR DESIGN OF AIR BUBBLE SYSTEMS
Ismail, N. 1977.
Coastal Engineering Conference, 15th, Honolulu, 1976. Vol. IV:2994-3013.

Spill containment, Equipment, Design-engineering, Dispersion

A comprehensive study of gas-liquid dispersions was carried out to determine the effect of physical properties, distributor arrangement, and air flow rate on the rate of the jet. The zone of flow establishment was found to extend greater distances of the water depth than in the case of one-phase turbulent plumes. Results showed that efficiency of air bubble plumes can be increased by proper distributor design for which recommendations are provided.

79B-0389
OIL SLICK INSTABILITY AND THE ENTRAINMENT FAILURE OF OIL CONTAINMENT BOOMS
Leibovich, S. 1976.
Journal of Fluids Engineering 98(1):98-105.

Spill containment, Booms, Oil slicks, Models, Equipment, Physical effects, Behavior

Failure of oil entrainment by booms occurs when the relative velocity of the oil layer and water current exceed a critical value. The onset of droplet formation from contained slicks is due to the breaking of finite amplitude interfacial waves. The waves result from the equilibration of amplifying Kevin-Helmholtz waves. Conditions for droplet shedding from the headwave alone and the entire slick are derived.

79B-0390
CONTAINMENT BARRIER SECTION ARRANGEMENT
Meyers, F. 1978.
US Patent 4,068,478

Spill containment, Booms, Equipment, Flotation, Design-engineering, Patent

An improved oil containment boom section comprises flotation means having "a predetermined buoyancy to provide upper portions thereof above the surface level of a liquid body for the conditions of the boom section in the liquid body, and a lower portion below the surface level."

[from Underwater Information Bulletin 10(3):#78/06/46. 1978]

B. OIL POLLUTION PREVENTION AND CONTROL

4,068,478
CONTAINMENT BARRIER SECTION ARRANGEMENT
Frank Meyers; Henry J. Folson, and Gwenn B. Meyers, all of Los Angeles, Calif., assignors to Frank Meyers, Torrance, Calif.
Filed Nov. 3, 1975, Ser. No. 628,231
Int. Cl.[2] E02B *15/04*
U.S. Cl. 61—1 F 78 Claims

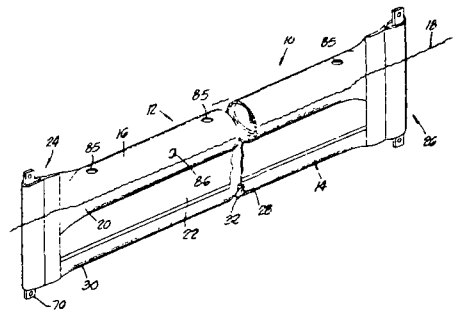

79B-0391
BARRIER CONSTRUCTION FOR WATER CARRIED POLLUTANTS
Preus, P. 1978.
US Patent 4,065,923

Spill containment, Booms, Design-engineering, Patent, Equipment,

A new design for segmented oil containment barrier is detailed. The barrier is comprised of a series of end to end-connected boom sections, each of which has a hollow tubular sleeve containing a floatable material.

[from Underwater Information Bulletin 10(3):#78/06/17. 1978]

4,065,923
BARRIER CONSTRUCTION FOR WATER CARRIED POLLUTANTS
Paul Preus, 21 Smith Road, Toms River, N.J. 08753
Continuation-in-part of Ser. No. 676,794, April 14, 1976. This application Oct. 5, 1976, Ser. No. 729,713
Int. Cl.[2] E02B *15/04*
U.S. Cl. 61—1 F 4 Claims
1. A barrier for water carried pollutants comprising a series of end to end connected boom sections, each of said boom sections comprising a hollow tubular sleeve containing a floatable material therein, said barrier characterized by a cable

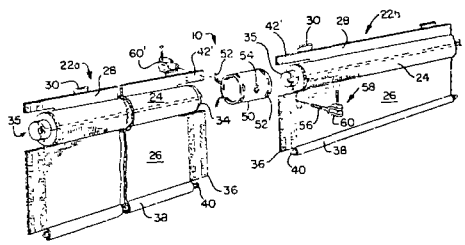

79B-0392
INFLATABLE BARRIER
Preus, P. 1978.
US Patent 4,104,884

Spill containment, Booms, Equipment, Design-engineering, Patent

A spill containment boom is described which consists of end to end connectable boom sections, each of which comprises a tubular sleeve containing seven inflatable tubular chambers.

[from Underwater Information Bulletin 11(1):#79/02/49. 1979]

B. OIL POLLUTION PREVENTION AND CONTROL

4,104,884
INFLATABLE BARRIER
Paul Preus, Smith Rd., Toms River, N.J. 08753
Continuation of Ser. No. 676,795, Apr. 14, 1976, abandoned.
This application Apr. 13, 1977, Ser. No. 786,993
Int. Cl.[2] E02B *15/04*
U.S. Cl. 61—1 F 3 Claims

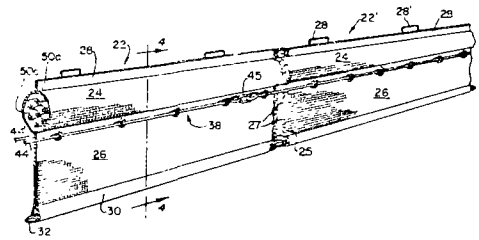

79B-0393
CRYOTHERMAL MANIPULATION OF PETROLEUM
Ross, S.L., O. Shuffman, and R. Shuffman. 1978.
US Patent 4,114,552

Spill containment, Leakage, Ships, Patent, Pollution control, *Cryothermal method

A method for stopping the leakage of a body of petroleum through a crack above the water line in a vessel hull is described. A mass of cryothermal material is positioned adjacent to the crack "so as to increase the surface tension of petroleum seeping though the crack and ultimately solidify the petroleum seeping through the crack thereby forming a plug to prevent leakage."

[from Underwater Information Bulletin 11(2):#79/04/34. 1979]

4,114,552
CRYOTHERMAL MANIPULATION OF PETROLEUM
Sigmund Lance Ross, 1280 E. 53rd St., Brooklyn, N.Y. 11234;
Oscar Shuffman, deceased, late of Scarsdale, N.Y., and by
Rose Shuffman, executrix, 1 Cornell, Scarsdale, N.Y. 10583
Division of Ser. No. 246,960, Apr. 24, 1972, Pat. No. 4,031,707.
This application Jan. 26, 1977, Ser. No. 762,659
Int. Cl.[2] B63B *43/16;* F25D *3/00*
U.S. Cl. 114—227 4 Claims

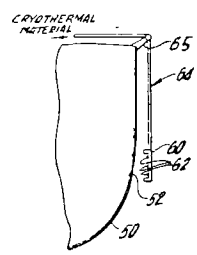

79B-0394
OIL FENCE
AB Sjuntorp. 1978.
US Patent 4,084,380.

Spill containment, Booms, Equipment, Design-engineering, Patent

An oil containment barrier made from three layers of impregnated woven textile material, interwoven to form an integrated single layer, is described.

[from Underwater Information Bulletin 10(6):#78/12/28. 1978]

4,084,380
OIL FENCE
Rudolf G. Hallhagen, Goteborg, Sweden, assignor to AB Sjuntorp, Sjuntorp, Sweden
Filed Jun. 3, 1976, Ser. No. 692,282
Int. Cl.[2] E02B *15/04*
U.S. Cl. 61—1 F 5 Claims

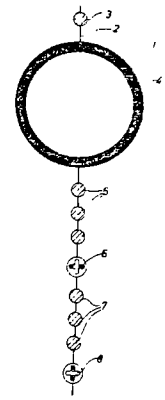

79B-0395
OIL RECOVERY FROM UNDER RIVER ICE
Telford, A. S., and H. A. Quam. 1979.
1979 Oil Spill Conference (Prevention, Behavior, Control, Cleanup), Los Angeles, 19-22 March 1979. Washington, DC, American Petroleum Institute 1979. p. 397-402. (API Publication No. 4308)

Spill containment, Spill removal, Rivers, Ice, Equipment, Skimmers

A field exercise designed to test the effectiveness of an angled slot in recovering oil spilled in an ice-covered river is described. The slot was placed downstream from the experimental spill site at a 30° angle to the current. The dimensions and capacity of the slot are given and the equipment used for cutting the slot and collecting the oil is discussed. The method was determined effective for capturing and diverting oil in under-ice conditions.

79B-0396
DEVELOPMENT OF A NOVEL ICE BOOM FOR FLOWING WATERS
Tsang, G., and N. Vanderkooy. 1979.
1979 Oil Spill Conference (Prevention, Behavior, Control, Cleanup), Los Angeles, 19-22 March 1979. Washington, DC, American Petroleum Institute, 1979. p. 377-385. (API Publication No. 4308)

Spill containment, Booms, Ice, Design-engineering, Rivers, USCG, *Canadian Coast Guard

A barrier which would allow spilled oil to pass through while barring passage of ice floes from the recovery area in an ice-infested river has been jointly developed and tested by the US and Canadian Coast Guards. The theory and design of the ice boom are explained and diagrammed in detail.

B. OIL POLLUTION PREVENTION AND CONTROL

79B-0397
RECOVERY OF OIL SPILLED UNDER RIVER ICE COVER
Tsang, G. 1979.
1979 Oil Spill Conference (Prevention, Behavior, Control, Cleanup), Los Angeles, 19-22 March 1979. Washington, DC, American Petroleum Institute, 1979. p. 387-396. (API Publication No. 4308)

Spill containment, Rivers, Ice, Design-engineering, Spill removal

A method for the recovery of oil spilled under river ice was studied in the laboratory and successfully field tested in March 1978. The method involves cutting an angled slot in the ice at a point downstream from the spill. Ice-imbedded containment barriers and slot-barrier combinations were also investigated. Theoretical considerations of the parameters affecting the design and effectiveness of the slot are addressed. A comparison of laboratory predictions and field results is also presented.

79B-0398
TOW PLATE FOR FLOATING BOOM
Uniroyal Inc. 1978.
US Patent 4,078,513

Spill containment, Booms, Design-engineering, Equipment, Patent, *Tow plate

Details of a tow plate designed for use with a floating oil containment boom are presented.

[from Underwater Information Bulletin 10(5):#78/10/78. 1978]

4,078,513
TOW PLATE FOR FLOATING BOOM
Robert Eugene Dorsch, South Bend, Ind., assignor to Uniroyal, Inc., New York, N.Y.
Filed Dec. 9, 1976, Ser. No. 748,573
Int. Cl.² B63B *21/56*
U.S. Cl. 114—244 9 Claims

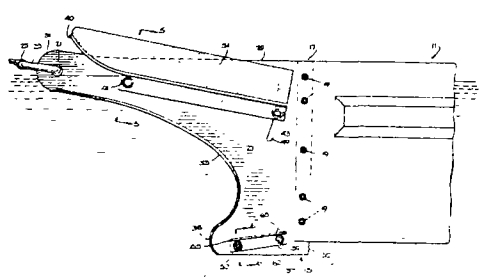

B. OIL POLLUTION PREVENTION AND CONTROL

2. Cleanup and Removal

79B-0399
CONTAINMENT AND RECOVERY TECHNIQUES FOR COLD WEATHER, INLAND OIL SPILLS
Allen, A.A. 1979.
1979 Oil Spill Conference (Prevention, Behavior, Control, Cleanup), Los Angeles, 19-22 March 1979. Washington, DC, American Petroleum Institute, 1979. p. 345-353. (API Publication No. 4308)

Spill cleanup, Spill containment, Inland, Rivers, Ice, Equipment, Sorbents, *Land spills

Various techniques for the containment and cleanup of inland oil spills during cold weather are described. Surface blocking, trenching, and floating, snow absorption, and conventional pumping and sorption procedures may be used for onshore spills. Cleanup approaches for spills on stationary or moving water and ice are also discussed.

79B-0400
METHOD FOR COLLECTING LIGHT-WEIGHT SUBSTANCE FLOATING ON A LIQUID SURFACE
Ballast-Nedam Groep. 1977.
US Patent 4,046,691

Spill cleanup, Spill containment, Design-engineering, Equipment, Patent

Floating oil is collected by means of an enclosure with an open bottom and sidewalls, extending from beneath the oil-water interface to above the surface of the water. A nozzle is located above the water surface outside of and spaced from the sidewalls; the nozzle points downward to direct a stream of oil/water to a location below and within the area of enclosure, from where the oil can be removed.

[from Underwater Information Bulletin 10(2):#78/04/10. 1978]

4,046,691
METHOD FOR COLLECTING LIGHT-WEIGHT SUBSTANCE FLOATING ON A LIQUID SURFACE
Eric Irons, East Hadden, England, assignor to Ballast-Nedam Groep, N.V., Amstelveen, Netherlands
Continuation of Ser. No. 545,552, Jan. 30, 1975, abandoned. This application Apr. 26, 1976, Ser. No. 680,449
Claims priority, application United Kingdom, Feb. 25, 1974, 9211/74; Netherlands, Aug. 23, 1974, 7411232
Int. Cl.² E02B 15/04
U.S. Cl. 210—83 3 Claims

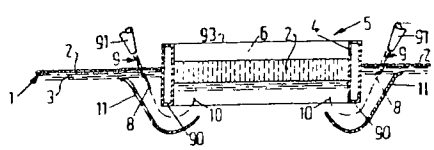

B. OIL POLLUTION PREVENTION AND CONTROL

79B-0401
THE GROUNDING OF THE IMPERIAL ST. CLAIR--A CASE HISTORY OF CONTENDING WITH OIL IN ICE
Beckett, C.J. 1979.
1979 Oil Spill Conference (Prevention, Behavior, Control, Cleanup), Los Angeles, 19-22 March 1979. Washington, DC, American Petroleum Institute, 1979. p. 371-375. (API Publication No. 4308)

Oil spills, Spill cleanup, Ice, Incineration, Fuel oil, Great Lakes, *Imperial St. Clair spill

A chronology of events following the 23 December 1976 grounding of the Imperial St. Clair in Lake Huron, which resulted in the spillage of an estimated 1600 bbls of diesel fuel and gasoline, is given. Under the winter ice conditions that prevailed at the time, burning was found to be the most effective method for dealing with the spill.

79B-0402
THE AMOCO CADIZ OIL SPILL CLEANUP OPERATIONS - AN OVERVIEW OF THE ORGANIZATION, CONTROL AND EVALUATION OF THE CLEANUP TECHNIQUES EMPLOYED
Bellier, P., and G. Massart. 1979.
1979 Oil Spill Conference (Prevention, Behavior, Control, Cleanup), Los Angeles, 19-22 March 1979. Washington, DC, American Petroleum Institute, 1979. p. 141 146. (API Publication No. 4308)

Spill response, Spill cleanup, Spill disposal, Amoco Cadiz spill, Coasts, Shorelines, Beaches, Harbors, Estuaries, France

In the cleanup operations, the French Navy handled offshore operations, and several government agencies and Army corps had responsibility for onshore cleanup. This paper describes attempts to minimize spill impacts and to protect the shoreline, pumping of the stranded oil where accessible, cleanup of sandy and shingle beaches, rocky coasts, harbors and estuaries, and disposal and treatment of oil and oils debris. In all, some 223,000 tons of light crude oil were spilled, and less than 20,000 tons of oil were finally recovered after separation from the total mass of material obtained from the coastal zone. Almost 10,000 persons worked on the cleanup project at its busiest period.

B. OIL POLLUTION PREVENTION AND CONTROL

79B-0403
NEW PROCEDURES FOR THE TOXICITY TESTING OF OIL SLICK DISPERSANTS
Blackman, R.A.A., F.L. Franklin, M.G. Norton, and K.M. Wilson. 1977.
Technical Reports of the Fisherires Laboratory, Lowestoft, UK, Vol. 39. 7 p

Dispersants, Toxicity, Oil slicks, Analytical techniques, Beaches, Environmental effects, Spill cleanup, Beach cleanup, UK, *Licensing

Technical descriptions of the different methods used to test dispersants used on the open sea and on oiled beaches are provided. Results of sea tests show that conventional dispersants tend to neutralize or inhibit the toxicity of dispersed oil, whereas concentrates may increase the toxicity. In the beach test mortalities of limpets exposed to crude oil alone range from 67 to 93%; the addition of dispersants leads to a wider range, 22 to 96%. Licensing standards and procedures for dispersant use in the UK under the Dumping at Sea Act of 1974 are given. [Also published in Marine Pollution Bulletin 9(9):234-238. 1978]

[from Marine Pollution Research Titles 5(2):#230. 1979]

79B-0404
CLEANING PRODUCTS USED IN OPERATIONS AFTER THE AMOCO CADIZ DISASTER
Bocard, C., P. Renault, and J. Croquette. 1979.
1979 Oil Spill Conference (Prevention, Behavior, Control, Cleanup), Los Angeles, 19-22 March 1979. Washington, DC, American Petroleum Institute, 1979. p. 163-169. (API Publication No. 4308)

Spill cleanup, Spill removal, Amoco Cadiz spill, Equipment, Sorbents, Dispersants, Biodegradation, Emulsions, *Chemical agents

In addition to the extremely unfavorable weather and the location of the Amoco Cadiz grounding, the rapid formation of "chocolate mousse" severely limited the efficiency of different cleanup materials and techniques used. At sea, restrictions on dispersant usage led to the use of sinking agents and sorbents, including an experimental rubber powder product and onshore and inland emulsion breakers, sorbents, dispersants and biodegradation aids. These chemicals proved to be the only usable cleanup technique in some situations; in other situations, they improved the efficiency of mechanical cleanup techniques.

79B-0405
THE USE OF AIRCRAFT FOR THE CLEARANCE OF OIL SPILLS AT SEA
Cormack, D., and H. Parker. 1979.
1979 Oil Spill Conference (Prevention, Behavior, Control, Cleanup), Los Angeles, 19-22 March 1979. Washington, DC, American Petroleum Institute, 1979. p. 469-473. (API Publication No. 4308)

Spill cleanup, Spill removal, Oil slicks, Dispersants, Cost analysis, *Aircraft

B. OIL POLLUTION PREVENTION AND CONTROL

Experiments conducted in the laboratory and at sea indicated that oil can be chemically dispersed without the need for artificial agitation. Field trials to determine the optimal dispersant droplet size for correct aerial dispersant distribution were followed by experimental oil slicks at sea, which were aerially treated with dispersants. Results of these experiments are presented for various crude oils and for different aircraft used. Logistics, costs, and the overall feasility of aircraft application of dispersants on offshore spills are discussed and compared with conventional dispersant operations.

79B-0406
IMPACT OF DISPERSANT USE DURING THE BRAZILIAN MARINA INCIDENT
Dewling, R.T., and C.C. Silva. 1979.
1979 Oil Spill Conference (Prevention, Behavior, Control, Cleanup), Los Angeles, 19-22 March 1979. Washington, DC, American Petroleum Institute, 1979. p. 269-276. (API Publication No. 4308)

Dispersants, Environmental effects, Spill cleanup, Fate, Beaches, Sediments, Crude oil, Brazil, *Brazilian Marina spill

Results of a study on the impact of dispersants used to remove Kuwait crude oil accumulated on the beaches following the 9 January 1978 spill from the tanker Brazilian Marina are reported. Use of the dispersants caused oil to penetrate more deeply into the sand, compounding the pollution problem and possibly contributing to the persistence of the oil. Penetration of detergent-treated oil on beaches appears to be a function of the nature of the oil and the particle size distribution of the sand.

79B-0407
ASSESSMENT OF THE ACW-400 OIL SKIMMER BY THE CANADIAN COAST GUARD FOR OIL SPILL COUNTERMEASURE OPERATIONS
Gill, S.D., and W. Ryan. 1979.
1979 Oil Spill Conference (Prevention, Behavior, Control, Cleanup), Los Angeles, 19-22 March 1979. Washington, DC, American Petroleum Institute, 1979. p. 497-499. (API Publication No. 4308)

Spill cleanup, Skimmers, Design-engineering, Equipment, *Canadian Coast Guard, *Performance testing

In the title performance assessment, a series of static and field acceptance trials were performed at St. John's, Newfoundland. These tests are described and an evaluation of the skimmer with respect to specific requirements of the Canadian Coast Guard is given. The device appears well designed and meets the safety, transportability, flexibility, seakeeping, and oil recovery criteria required to fulfill the specific countermeasures obligations of the Canadian Coast Guard.

B. OIL POLLUTION PREVENTION AND CONTROL

79B-0408
OIL SPILL DEBRIS DISPOSAL HARDWARE SYSTEMS: METHODS FOR CONCEPTUALIZATION AND DEVELOPMENT
Hansen, W.G., D.E. Ross, and J.R. Sinclair. 1979.
1979 Oil Spill Conference (Prevention, Behavior, Control, Cleanup), Los Angeles, 19-22 March 1979. Washington, DC, American Petroleum Institute, 1979. p. 507-513. (API Publication No. 4308)

Spill removal, Spill disposal, Equipment, Design-engineering, USCG, *Debris disposal systems

US Coast Guard-sponsored research has determined that additional equipment systems are necessary for the effective disposal of wastes collected during cleanup of oil spills. It was found that, in most cases, existing systems are designed for specific environmental and debris conditions and may not provide sufficient flexibility for the variety of situations that can be encountered during Coast Guard operations. However, there is equipment presently available that can be included in disposal systems, and which would be responsive to a wide range of oil spill scenarios.

79B-0409
SKIMMING APPARATUS
Hartwick, N.J.R., and D.C.C. Lathe. 1978.
US Patent 4,085,049

Spill cleanup, Skimmers, Flotation, Equipment, Design-engineering, Patent

An oil skimmer is described, which consists of a pair of float members spaced around an elongate open-sided oil containment reservoir containing a weir edge that is parallel with the reservoir longitudinal axis. The reservoir is rotatably mounted to the float members so that the rate of skimming can be adjusted.

[from Underwater Information Bulletin 10(6):#78/12/41. 1978]

4,085,049
SKIMMING APPARATUS
Norman John Reid Hartwick, and Donald Charles Clayton Lathe, both of Box 1994, Drayton Valley, Ontario, Canada
Filed May 4, 1976, Ser. No. 683,145
Claims priority, application Canada, Apr. 2, 1976, 245038
Int. Cl.[2] B01D *17/00*
U.S. Cl. 210—242 S 7 Claims

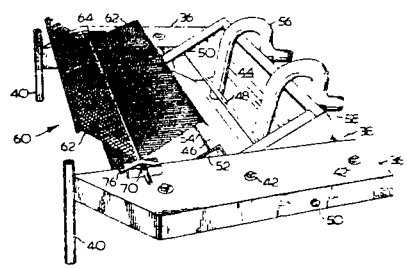

B. OIL POLLUTION PREVENTION AND CONTROL

79B-0410
CLEANUP OPERATIONS AFTER THE 1976 SS SANSINENA EXPLOSION--AN INDUSTRIAL PERSPECTIVE
Hutchinson, J.H. 1979.
1979 Oil Spill Conference (Prevention, Behavior, Control, Cleanup), Los Angeles, 19-22 March 1979. Washington, DC, American Petroleum Institute, 1979. p. 429-433. (API Publication No. 4308)

Spill cleanup, Spill response, Tankers, Harbors, Equipment, Sansinena spill, California

Cleanup and salvage operations conducted after the 17 December 1976 explosion of the tanker Sansinena in Los Angeles Harbor are described. A major problem encountered was the fact that the spilled oil was heavier than the water and sank. Relative advantages and disadvantages of some of the cleanup methods used are discussed.

79B-0411
COMPUTER SEARCHING FOR POLLUTION CLEANUP EQUIPMENT
Imbrie, R.J., and K.R. Karwan. 1979.
1979 Oil Spill Conference (Prevention, Behavior, Control, Cleanup), Los Angeles, 19-22 March 1979. Washington, DC, American Petroleum Institute, 1979. p. 257-260. (API Publication No. 4308)

Information systems, Equipment, Spill cleanup, Spill response, USCG

The Spill Cleanup Inventory System (SKIM), a computer information retrieval system implemented by the US Coast Guard in 1978, is described. The system is designed to provide those involved in emergency spill response efforts with comprehensive lists of available cleanup equipment. Operating instructions and information about SKIM can be obtained from the Coast Guard Office of Marine Environment and Systems, Pollution Reponse Branch (G-WEP-4/73), Washington, DC 20590.

79B-0412
OIL SPILL RETRIEVAL SYSTEM
Janson, J.J. 1978.
US Patent 4,105,554

Spill removal, Oil-water separation, Monitoring, Pollution control, Equipment, Design-engineering, Patent

A system for oil spill recovery is described which is operable from a boat on which a receiving tank receives an oil/water mixture which is then separated in a tank, the oil being stored and the water discharged. Monitors analyze the discharge waters and provide a first signal when oil in water reaches a preselected low level and a second signal when above this level. Activation of the second signal causes the water to be retained for an additional separation cycle.

[from Underwater Information Bulletin 11(1):#79/02/57. 1979]

B. OIL POLLUTION PREVENTION AND CONTROL

4,105,554
OIL SPILL RETRIEVAL SYSTEM
John J. Janson, 14103 Blackburn, Livonia, Mich. 48154
Filed May 31, 1977, Ser. No. 802,026
Int. Cl.[2] E02B *15/04*
U.S. Cl. 210—96 R 13 Claims

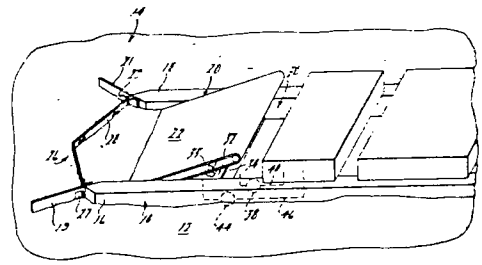

79B-0413
SKIMMING BARRIER PERFORMANCE EVALUATION: OFFSHORE VERSION AND HARBOR VERSION
Lichte, H.W. 1979.
1979 Oil Spill Conference (Prevention, Behavior, Control, Cleanup), Los Angeles, 19-22 March 1979. Washington, DC, American Petroleum Institute, 1979. p. 489-492. (API Publication No. 4308)

Spill cleanup, Booms, Skimmers, Design-engineering, Equipment, EPA, USCG, *Performance testing, *OHMSETT facility

Performance tests were carried out at EPA's OHMSETT test facility for two oil skimming devices, one for the full-scale high seas USCG Skimming Barrier, the second for Scoop, a scaled-down skimming barrier for near-shore use, incorporating a dedicated vessel. Both systems performed well considering the advancing speed and water conditions, with the best performances recorded in calm water conditions. The Scoop system appears to outperform the larger system at certain speeds; it also has a greater adjustment capability. The larger system may be used with a 200-m barrier and be deployed to skim a spill at a rate of 2,700 m^3 per day.

79B-0414
OIL SPILLS: WEATHERING, POSSIBLE EFFECTS AND THEIR ALLEVIATION
McAuliffe, C.D. 1977.
Oil and Aquatic Ecosystems, Tanker Safety, and Oil Pollution Liability. Proceedings of the Cordova Fisheries Institute held in Cordova, Alaska on April 1-3, 1977. B. Melteff (ed.). University of Alaska and Alaska Sea Grant Program, Report 77-8. p. 33-51. (NTIS PB-277 060)

Dispersants, Oil slicks, Weathering, Fate, Spill cleanup, Toxicity

The title topic is reviewed. The listed advantages to chemically dispersing an oil slick are: The oil does not travel as far as in a slick; shorelines are less threatened; weathering processes of the dispersed oil are accelerated; oil toxicity is more quickly reduced; and most of the known adverse effects are minimized or reduced.

B. OIL POLLUTION PREVENTION AND CONTROL

79B-0415
AIR CUSHION VEHICLES (ACV'S) AND OILSPILL CLEANUP OPERATIONS
Meikle, K.M. 1978.
Spill Technology Newsletter 3(6):14-18.

Spill cleanup, Equipment, Design-engineering, Booms, Skimmers, Ships, *Field tests, *Air cushion vehicles

A study was conducted of the feasibility of using ACV's in oil spill clean-up operations at sea. Field tests using a modified Bell Voyageur 002ACV indicated that the hovercraft performed very well as a carrier of equipment, as a work platform, and as a self-sufficient resource craft for performing the following functions: Laying, anchoring and towing booms and maneuvering over the top of booms; coming alongside other vessels to transfer equipment; recovering booms and anchors, and deflecting oil. The vessel also demonstrated its unique capabilities of operating in extremely shallow waters.

79B-0416
THE NEPCO 140 SPILL
Nadeau, R.J. 1978.
Conference on Assessment of Ecological Impacts of Oil Spills, Keystone, Colorado, 14-17 June 1978. American Institute of Biological Sciences, 1978. p. 241-250.

Spill cleanup, Fuel oil, Shorelines, Ships, St. Lawrence River, *Nepco 140 spill

On 23 June 1976 the Nepco 140 grounded in the American Narrows of the St. Lawrence River which is in the Thousand Island region, a world renowned tourist attraction. Due to the inaccessible and irregular shoreline, the 1,166,000 L (308,000 gal) spill of No. 6 oil was difficult to clean up and required considerable hand labor to accomplish. The cleanup costs, the greatest incurred for any spill to date, were $8.5 million.

79B-0417
OIL RECOVERY APPARATUS
National Research Development Corporation. 1977.
US Patent 4,056,472

Spill cleanup, Skimmers, Design-engineering, Equipment, Patent

The described apparatus comprises an inclined-plane, catamaran-type skimmer. Specially designed oil collection arrangements and means for pumping the collected oil from the collection are are detailed.

[from Underwater Information Bulletin 10(2):#78/04/65. 1978]

B. OIL POLLUTION PREVENTION AND CONTROL

4,056,472
OIL RECOVERY APPARATUS
Raymond Geoffrey Teasdale, Waterlooville, England, assignor to National Research Development Corporation, London, England
Filed Mar. 12, 1976, Ser. No. 666,321
Claims priority, application United Kingdom, Mar. 13, 1975, 10602/75; June 18, 1975, 26022/75
Int. Cl.[2] E02B *15/04*
U.S. Cl. 210—242 S 12 Claims

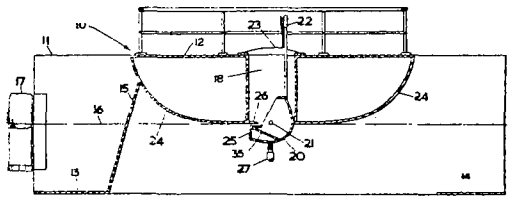

79B-0418
OIL SKIMMING APPARATUS
Propp, C.F. 1977.
US Patent 4,054,525

Spill cleanup, Skimmers, Design-engineering, Equipment, Patent

An apparatus for skimming oil comprising a specially designed vessel is described. The vessel has an opening in the front end leading rearward to an inlet connecting with an oil collection area.

[from Underwater Information Bulletin 10(2):#78/04/46. 1978]

4,054,525
OIL SKIMMING APPARATUS
Carl F. Propp, Rte. 2, Box 97, Estacada, Oreg. 97023
Continuation-in-part of Ser. No. 286,606, Sept. 5, 1972, abandoned. This application Feb. 7, 1974, Ser. No. 440,320
Int. Cl.[2] E02B *15/04*
U.S. Cl. 210—242 S 9 Claims

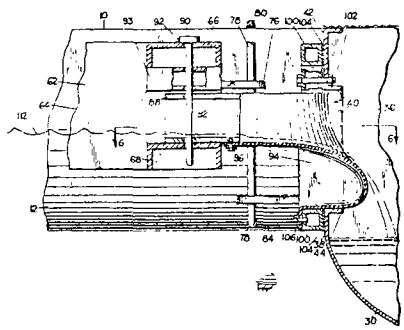

79B-0419
CLEANUP EFFICIENCY OF A FUEL OIL SPILL IN COLD WEATHER
Schrier, E., and C. Eidam. 1979.
1979 Oil Spill Conference (Prevention, Behavior, Control, Cleanup), Los Angeles, 19-22 March 1979. Washington, DC, American Petroleum Institute, 1979. p. 419-427. (API Publication No. 4308)

Spill cleanup, Ice, Equipment, Fuel oil, Skimmers, Incineration, Booms, Bouchard 65 spill, Buzzards Bay

B. OIL POLLUTION PREVENTION AND CONTROL

The cleanup techniques employed by the teams responding to the 28 January 1977 No. 2 fuel oil spill from the Bouchard No. 65 in Buzzards Bay are described and evaluated. In the ice-infested waters which prevailed at the time of the spill, vacuum skimming was the most effective recovery method while removal of contaminated ice was the least effective. Included among the recommendations for future spills under similar conditions are modifications to the vacuum skimming technique and expanded use of burning and endless rope skimming methods.

79B-0420
PERFORMANCE TESTS OF FOUR SELECTED OIL SPILL SKIMMERS
Schwartz, S.H. 1979.
1979 Oil Spill Conference (Prevention, Behavior, Control, Cleanup), Los Angeles, 19-22 March 1979. Washington, DC, American Petroleum Institute, 1979. p. 493-496. (API Publication No. 4308)

Spill cleanup, Skimmers, Design-engineering, Equipment, EPA, *Performance testing, *OHMSETT facility

EPA's OHMSETT test facility was used for a performance test series of four commercially available skimming devices: Oil Mop, Inc. Dynamic Skimmer, the Cyclonet 050 mounted on a Zodiac Inflatable boat, the Anti Pollution, Inc. Clowsor Skimmer, and the Bennett Pollution Controls, Ltd. Mark 6E Skimmer. Test results for each device are presented and discussed. The general trend for all devices showed diminishing performance with increased tow speeds and wave conditions.

79B-0421
"WHY CLEAN UP OIL SPILLS?" - ANOTHER VIEWPOINT
Skinner, R.G. 1978.
Spill Technology Newsletter 3(6):13.

Spill cleanup, Oil slicks, Spill response

This article comments on two recent articles in the Spill Technology Newsletter [E. Levy, Vol. 3, No. 5, and D. Mackay, Vol. 3, No. 4]. The author notes that "we clean up oil slicks because we are told we cannot afford not to. There is a sufficiently vocal public constituency that demands it, which is in symbiosis with a sufficiently energetic bureau cracy and an imaginative academe which depends on its being kept a concern."

B. OIL POLLUTION PREVENTION AND CONTROL

79B-0422
API/SC-PCO SOUTHERN CALIFORNIA 1978 OIL SPILL TEST PROGRAM
Smith, D.D., and G.H. Holliday. 1979.
1979 Oil Spill Conference (Prevention, Behavior, Control, Cleanup), Los Angeles, 19-22 March 1979. Washington, DC, American Petroleum Institute, 1979. p. 475-482. (API Publication No. 4308)

Spill cleanup, Skimmers, Dispersants, API, Oil slicks, California, *Petroleum Contingency Organization, *Field tests

Seven experimental slicks ranging in volume from 5 to 20 bbl were sprayed with low toxicity dispersants using a helicopter, a cropdusting monoplane, and two types of boat-mounted spray systems. A skimmer was also tested on an eighth spill. The dispersants tested effectively dispersed the crude oil used, the four application techniques were all viable methods, and the skimmers recovered oil successfully. These tests were conducted by API and the Southern California - Petroleum Contingency Organization.

79B-0423
CLEANUP OF AN OIL SPILL INTO GROUND WATER AT WILLIAMSPORT, PENNSYLVANIA - A CASE HISTORY
Villaume, J.F., B.H. Herre, and D.P. Voykin. 1979.
1979 Oil Spill Conference (Prevention, Behavior, Control, Cleanup), Los Angeles, 19-22 March 1979. Washington, DC, American Petroleum Institute, 1979. p. 501-505. (API Publication No. 4308)

Spill containment, Spill cleanup, Spill removal, Groundwater, Leakage, Oil storage, Oil discharges, Fuel oil, Pennsylvania

During 1977, more than 283,000 L (75,000 gal) of No. 2 fuel oil leaked from a corroded oil storage tank near Williamsport, Pennsylvania. Wells were drilled to pump out and recover the oil and to lower the water table so that the spreading oil plume could be contained. This paper describes and discusses the cleanup operation which resulted in the recovery of about 170,000 L (45,000 gal) of oil after nine months, at a cost of about $0.66/L ($2.50/gal).

79B-0424
OIL SPILL CONTROL AND ABATEMENT TECHNIQUES USED AT THE S.S. SANSINENA EXPLOSION SITE -- A COAST GUARD PERSPECTIVE
White, W.W., and J.T. Kopeck. 1979.
1979 Oil Spill Conference (Prevention, Behavior, Control, Cleanup), Los Angeles, 19-22 March 1979. Washington, DC, American Petroleum Institute, 1979. p. 434-435. (API Publication No. 4308)

Spill cleanup, Spill response, Tankers, Harbors, Equipment, USCG, Sansinena spill, California

B. OIL POLLUTION PREVENTION AND CONTROL

The 17 December 1976 explosion of the Sansinena in Los Angeles harbor resulted in the spillage of 30,000 bbl of oil, millions of dollars in property damage, and the loss of nine lives. Efforts to remove the oil from the bottom of the channel during the subsequent 16 months, which included diving, pumping, and skimming, are described. Restrictions on shipping operations in Berth 46 where the explosion occurred were still in effect two years after the incident.

3. Environmental Restoration

79B-0425
THE RESTORATION OF OILED SHORELINES BY THE PROPER USE OF CHEMICAL DISPERSANTS
Canevari, G.P. 1979.
1979 Oil Spill Conference (Prevention, Behavior, Control, Cleanup), Los Angeles, 19-22 March 1979. Washington, DC, American Petroleum Institute, 1979. p. 443-446. (API Publication No. 4308)

Spill cleanup, Equipment, Dispersants, Intertidal zone, Environmental effects, Economics, Shorelines, Beaches

"This paper reviews the shortcomings of the expensive mechanical cleanup methods and presents the overall mechanism and technique for restoration using chemical agents. Although the use of chemicals in intertidal zones has not been well accepted by some environmental and regulatory groups, there is limited documentation that use of these agents results in less environmental damage and more rapid and economical shoreline restoration than mechanical alternatives." The implications and feasibility of attempting no cleanup in certain areas are discussed.

79B-0426
ECOLOGICAL IMPACTS OF OIL SPILL CLEANUP: ARE THEY SIGNIFICANT?
Lindstedt-Siva, J. 1979.
1979 Oil Spill Conference (Prevention, Behavior, Control, Cleanup), Los Angeles, 19-22 March 1979. Washington, DC, American Petroleum Institute, 1979. p. 521-524. (API Publication No. 4308)

Spill cleanup, Environmental effects, Spill response, Restoration, Marine mammals, Marshes, Beaches

The author stresses the need for oil spill response efforts to be aimed at minimizing the ecological impact of the oil rather than at removing visible oil solely for aesthetic reasons. Recommendatios for low-impact cleanup methods are made for five specific types of environments: Marine mammal rookeries or haul-out areas, salt marshes, rocky beaches, sandy beaches, and sand and mud flats.

B. OIL POLLUTION PREVENTION AND CONTROL

4. Personnel Training

79B-0427
FIREMEN AND EMERGENCY PERSONNEL OIL SPILL TRAINING PROGRAM
Duerden, F.C., W.L. Pierce, and R.G. Simmons. 1979.
1979 Oil Spill Conference (Prevention, Behavior, Control, Cleanup), Los Angeles, 19-22 March 1979. Washington, DC, American Petroleum Institute, 1979. p. 209-211. (API Publication No. 4308)

Personnel training, Contingency planning, Spill cleanup, Canada, Spill response

The title training program, developed by the Canadian Environmental Protection Service, is aimed specifically at firemen, police, and other emergency response personnel who may be the first persons of authority to arrive at the scene of an oil spill, but who may lack the ecological awareness necessary for making knowledgeable decisions in response to the situation. The program utilizes slide and film presentations and a literature kit handout.

79B-0428
TARGETING SPILL PREVENTION AND CONTROL TRAINING TO THE RESPONSIBLE INDIVIDUAL
Oberholtzer, G.R., and J.T. Acuff. 1979.
1979 Oil Spill Conference (Prevention, Behavior, Control, Cleanup), Los Angeles, 19-22 March 1979. Washington, DC, American Petroleum Institute, 1979. p. 201-203. (API Publication No. 4308)

Personnel training, Contingency planning, Spill prevention, Spill cleanup, Spill response

The development and content of a one-week oil spill control course taught about 20 times per year at Corpus Christi, Texas, is described. The course, which was first taught in October 1977, emphasizes the need for training programs to be geared towards 3 specific organizational levels: Top management, middle management, and task-oriented workers. An additional team training program is also thought to be beneficial.

79B-0429
TRAINING TECHNIQUES: TEXAS A&M UNIVERSITY'S OIL SPILL CONTROL COURSE
Payne, J.L., and R.E. Lewis. 1979.
1979 Oil Spill Conference (Prevention, Behavior, Control, Cleanup), Los Angeles, 19-22 March 1979. Washington, DC, American Petroleum Institute, 1979. p. 205-207. (API Publication No. 4308)

Personnel training, Contingency planning, Spill cleanup, Spill response

B. OIL POLLUTION PREVENTION AND CONTROL

The rationale behind and educational objectives of the title course, offered through Texas A&M's Engineering Extension Service, are outlined. A "situational query" approach, in which the class participants are given a set of conditions pertaining to a hypothetical spill, and a simulated spill are employed to afford an understanding of the factors involved in developing and evaluating contingency plans. An example of a situational query is appended. Course evaluation techniques, available facilities, and proposed changes in the curriculum are discussed.

5. Contingency Planning

79B-0430
CLEAN CARIBBEAN COOPERATIVE
Alberts, D.A. 1979.
1979 Oil Spill Conference (Prevention, Behavior, Control, Cleanup), Los Angeles, 19-22 March 1979. Washington, DC, American Petroleum Institute, 1979. p. 225-227. (API Publication No. 4308)

Spill cooperatives, Contingency planning, Spill cleanup, Equipment, Spill response, Caribbean Sea

The Clean Caribbean Cooperative (CCC) is an oil spill cooperative established by a number of oil companies operating in the Caribbean. The objective of the CCC is an enhanced capability for prompt and efficient response to oil spills in the Caribbean. The basic operation of the CCC is explained and the equipment stockpile described. Non-member use of CCC resources is also discussed.

79B-0431
DIFFICULTIES IN UNLOADING HEAVY OIL FROM DAMAGED BARGES DURING EXTREMELY COLD WEATHER AND ICE CONDITIONS
Bailey, J.R. 1979.
1979 Oil Spill Conference (Prevention, Behavior, Control, Cleanup), Los Angeles, 19-22 March 1979. Washington, DC, American Petroleum Institute, 1979. p. 403-405. (API Publication No. 4308)

Spill response, Pollution control, Ships, USCG, Rivers, Ice, Oil removal, Equipment, Mississippi River

Response actions taken after the 10 January 1977 grounding of a tank barge in the Missippi River, which resulted in the spillage of an estimated 1000 bbl of No. 6 fuel oil, are detailed. Response efforts

included the US Army Corps of Engineers, the US Coast Guard, and several commercial companies. Extremely low temperatures and the presence of heavy ice resulted in the closure of the river to navigation and severely restricted the delivery and operation of equipment necessary for offloading the remaining cargo from the damaged barge. Offloading operations had to await the arrival of a steam generator following the reopening of the river a month after the grounding. The incident demonstrated the need for development of a portable steam generator to heat the cargo for offloading in extreme conditions.

79B-0432
MEDITERRANEAN OIL POLLUTION MONITORING AND CONTROL: TECHNICAL AND POLICY ISSUES
Boxer, B. 1979.
1979 Oil Spill Conference (Prevention, Behavior, Control, Cleanup), Los Angeles, 19-22 March 1979. Washington, DC, American Petroleum Institute, 1979. p. 283-285. (API Publication No. 4308)

Contingency planning, International agreements, Foreign governments, Pollution control, Law enforcement,*UNEP, IMCO, Mediterranean Sea, *ROCC

In support of the objectives set forth by the 1976 Barcelona Convention, the Regional Oil Combatting Center for the Mediterranean Sea (ROCC) was established under the auspices of UNEP and IMCO to provide information to Mediterranean coastal states on available cleanup supplies, help states in developing national contingency plans, and facilitate cooperation among states in spill response planning. Problems encountered by the ROCC presently include: A lack of clarity as to the ROCC's coordinating role; difficulties in applying results of hydrocarbons monitoring and research to spill prevention and contingency planning; jurisdictional questions relating to the regulation and enforcement rights of coastal states; and lack of consensus on technical aspects of planning and response due to diverse national pollution control standards and objectives.

79B-0433
CLEANUP OF A COLD WEATHER TERRESTRIAL PIPELINE SPILL
Buhite, T.R. 1979.
1979 Oil Spill Conference (Prevention, Behavior, Control, Cleanup), Los Angeles, 19-22 March 1979. Washington, DC, American Petroleum Institute, 1979. p. 367-369. (API Publication No. 4308)

Contingency planning, Spill responses, Pipelines, Inland, Trans-Alaska pipeline, Ice, Spill containment, Spill cleanup, Restoration, Alaska

The spill response and restoration measures implemented following a 15 February 1978 pipeline spill near Fairbanks, Alaska are described. The incident demonstrated the effectiveness of the pipeline oil spill contingency plan and revealed the problems and advantages associated with oil recovery under northern latitude winter conditions.

B. OIL POLLUTION PREVENTION AND CONTROL

79B-0434
DECISION CRITERIA FOR THE CHEMICAL DISPERSION OF OIL SPILLS
Castle, R.W., and E. Schrier. 1979.
1979 Oil Spill Conference (Prevention, Behavior, Control, Cleanup), Los Angeles, 19-22 March 1979. Washington, DC, American Petroleum Institute, 1979. p. 459-463. (API Publication No. 4308)

Contingency planning, Dispersants, Spill cleanup, Environmental protection, Guidelines

The controversy of when and how dispersants should be used to protect the environment is generated in part by the lack of guidelines by which all relevant factors can be considered together. This paper discusses the criteria necessary for providing a basis for sound and acceptable decisionmaking. These include human risk, feasibility and adequacy of physical control and recovery, dispersibility of the oil, logistics considerations, and whether dispersion will achieve a reduction in environmental impacts and interference with water usage.

79B-0435
THE NATIONAL RESPONSE CENTER OF THE U.S. COAST GUARD
Clow, J.R. 1979.
1979 Oil Spill Conference (Prevention, Behavior, Control, Cleanup), Los Angeles, 19-22 March 1979. Washington, DC, American Petroleum Institute, 1979. p. 121-122. (API Publication No. 4308)

Spill response, USCG, Contingency planning, Government agencies, Spill cleanup, Pollution control, *National Response Center

The National Response Center (NRC), established at the US Coast Guard headquarters under the National Oil and Hazardous Substances Pollution Contingency Plan, is a 24-hour center to which discharges or spills of polluting substances may be reported. The NRC relays the reports to the appropriate official responsible under a regional contingency plan for coordinating pollution control efforts at the scene of the incident. The NRC may be contacted from any point in the continental US via the following toll-free number: 800-424-8802 (426-2675 in the Washington, DC area).

79B-0436
OIL POLLUTION CONTINGENCY PLAN, LIVERPOOL DISTRICT
Department of Trade, UK. 1976.
Liverpool, UK, Department of Trade, Marine Survey Office, 1976. 67 p.

Contingency planning, Spill response, Pollution control, UK

Summary not available.

[from Applied Ecology Abstracts 3(7):#308500. 1977]

B. OIL POLLUTION PREVENTION AND CONTROL

79B-0437
REPORTING OF ENVIRONMENTAL ACCIDENTS IN MANITOBA
Ediger, D. 1979.
Spill Technology Newsletter 4(1):11-14.

Spill response, Information systems, Canada, *Manitoba, *Environmental Accident Program, *Spill reporting

The purpose of the Environmental Accident Program in Manitoba is to provide a rapid, coordinated response to spills and leaks of hazardous materials into the environment. A primary means of achieving this purpose is the availability of a twenty-four hour telephone number at the Manitoba Emergency Measures Organizations for reporting all types of environmental accidents.

79B-0438
DEVELOPING A DISPERSANT SPRAYING CAPABILITY
Gill, S.D. 1979.
1979 Oil Spill Conference (Prevention, Behavior, Control, Cleanup), Los Angeles, 19-22 March 1979. Washington, DC, American Petroleum Institute, 1979. p. 465-467. (API Publication No. 4308)

Spill response, Dispersants, Equipment, Ships, Design-engineering, Canada, *Canadian Coast Guard

In the interest of effective oil spill response, the Canadian Coast Guard (CCG) has pursued an equipment acquisition program that includes dispersant spraying equipment. To develop a national spraying capability, the CCG is modifying conventional offshore spraying gear so it can be mounted on almost any vessel of convenience. Specialized small spraying vessels and pumps have been designed and built, mobile dispersant storage tanks have been acquired, and the use of aircraft for shipment and spraying of dispersants is currently under development.

79B-0439
UNIT OPERATIONS, UNIT PROCESSES AND LEVEL OF RESOURCE REQUIREMENTS FOR THE CLEANUP OF THE OIL SPILL FROM THE SUPERTANKER AMOCO CADIZ
Hann, R.W., Jr. 1979.
1979 Oil Spill Conference (Prevention, Behavior, Control, Cleanup), Los Angeles, 19-22 March 1979. Washington, DC, American Petroleum Institute, 1979. p. 147-162. (API Publication No. 4308)

Spill response, Oil spills, Amoco Cadiz spill, Equipment, Spill cleanup, Contingency planning, France

Spill response strategies and the timing of resources used for cleanup of the Amoco Cadiz spill of March 1978 are examined, with emphasis on the level of financial resources, manpower, and supply and equipment used in

various phases of the cleanup operation. "The paper concludes with an extensive discussion of the lessons which have become apparent or are being reinforced by this particular spill with regard to the technology and administrative structure needed to effectively deal with very large spills."

79B-0440
OIL SPILL CLEANUP
Hart, J.W. 1977.
Oil and Aquatic Ecosystems, Tanker Safety, and Oil Pollution Liability. Proceedings of the Cordova Fisheries Institute, held in Cordova, Alaska on April 1-3, 1977. B. Melteff (ed.). University of Alaska and Alaska Sea Grant Program, Report 77-8. p. 179-181. (NTIS Report PB-277 060)

Spill cooperatives, Spill response, Spill cleanup, Equipment, Offshore production, Harbors

The Gulf of Alaska Cleanup Organization provides cleanup capability for drilling and production operations. Described are the equipment purchased by the Organization (including booms, skimmers, boats, lights, dispersants,and sorbents) and the capability of dealing with spills in harbors and in the open ocean.

79B-0441
THE TEST BEAUFORT RESPONSE EXERCISE - BREX III
Hoffman, J.M., and B. Mansfield. 1978.
Spill Technology Newsletter 3(6):24-30.

Spill response, Contingency planning, Government agencies, Canada, Beaufort Sea, *BREX III field exercise

Using a hypothetical spill scenario of an offshore well blowout in the Beaufort Sea, the title field exercise was conducted from 31 May to 2 June 1978 in the Yukon Territory Government offices at Whitehorse. The purpose of the exercise was to evaluate the organization and procedures to be used in a joint government-industry spill response plan - the "Government Contingency Plan for Major Oil Spills in the Beaufort Sea." This article details the lessons learned and observations made, and the preparation and conduct of exercises.

B. OIL POLLUTION PREVENTION AND CONTROL

79B-0442
CLEAN ATLANTIC ASSOCIATES: AN OIL SPILL CLEANUP COOPERATIVE FOR THE ATLANTIC OFFSHORE AREA
Hubbard, J.F., and T.E. Allen. 1979.
1979 Oil Spill Conference (Prevention, Behavior, Control, Cleanup), Los Angeles, 19-22 March 1979. Washington, DC, American Petroleum Institute, 1979. p. 229-236. (API Publication No. 4308)

Spill cooperatives, Contingency planning, Spill cleanup, Spill response, Equipment, Personnel training, Atlantic Ocean, OCS

Clean Atlantic Associates was established by petroleum companies with oil and gas leases in the Mid- and South Atlantic OCS to maintain an equipment stockpile and provide trained manpower in the event of an oil spill. The management and funding of the cooperative is discussed, as well as the types of equipment kept ready in the stockpile. An Oil Spill Contingency Manual for use by the member companies and the training programs in the deployment and operation of the equipment are also described.

79B-0443
MAJOR SPILL RESPONSE PLANNING FOR TANKER OPERATIONS
Kazmierczak, L.J. 1979.
1979 Oil Spill Conference (Prevention, Behavior, Control, Cleanup), Los Angeles, 19-22 March 1979. Washington, DC, American Petroleum Institute, 1979. p. 123-125. (API Publication No. 4308)

Contingency planning, Spill response, Personnel training, Tankers, Oil spills, Spill cleanup

An oil spill contingency plan developed by Sun Transport, Inc. is described The focus of the plan is four-fold: 1) An alerting procedure for identifying the problem and initiating the plan; 2) identification of individuals responsible for various tasks involved in the response action; 3) identification of those tasks; and 4) identification of available resources including contractors, equipment, and government agencies. The author stresses the orientation of the plan towards the people responsible for its implementation rather than towards the action required for a specific location.

79B-0444
LOGISTIC PLANNING FOR OIL SPILL CHEMICAL USE
Lindblom, G.P. 1979.
1979 Oil Spill Conference (Prevention, Behavior, Control, Cleanup), Los Angeles, 19-22 March 1979. Washington, DC, American Petroleum Institute, 1979. p. 453-458. (API Publication No. 4308)

Spill response, Spill cleanup, Dispersants, Equipment, Environmental effects, Contingency planning, *Logistics, *Chemical agents

B. OIL POLLUTION PREVENTION AND CONTROL

For effective use of chemical agents in oil spill cleanup operations, a number of factors must be considered in contingency planning. These are: Chemical types and their modes of action; design, operation, and availability of the equipment required; regulation of dose per unit area and the limitations of a distant operations base. Used early in a spill incident, and not as a last resort, chemicals can often materially benefit overall spill response efforts and mitigate or prevent adverse environmental effects.

79B-0445
WHY CLEAN UP OIL SPILLS - ANOTHER LOOK
Lindstedt-Siva, J. 1979.
Spill Technology Newsletter 4(1):15-16.

Contingency planning, Spill cleanup, Spill response, Environmental effects, Government agencies, Spill cooperatives

The author proposes that the first priority in spill response should be to minimize the ecological impacts of oil spills. Spill response planning as well as actual spill response measures should include the participation of ecologists. Regulatory agencies, industry cooperatives, cleanup contractors, and the scientific community should agree on spill response goals before a spill event occurs.

79B-0446
A CONCEPTUAL MODEL FOR RESPONSE TO ARCTIC OIL SPILLS
Lissauer, I.M., and D.L. Murphy. 1978.
Environmental Management 2(4):341-346.

Spill response, Contingency planning, Models, Arctic,Movement, Spreading, Ice

Because of the remoteness and severe climatic conditions of the Arctic, spill response is likely to be much slower than in temperate regions. Accurate predictions of the extent and subsequent movements of an oil spill are vital to any cleanup efforts. "Presented is the framework of a program to study the movement of oil spills in the arctic. Existing models of oil spreading and polar ice dynamics are reviewed, and areas where new model development is required are defined." A system design is developed for the purpose of contingency planning.

B. OIL POLLUTION PREVENTION AND CONTROL

79B-0447
GOVERNMENT CONTINGENCY PLANS FOR THE BEAUFORT SEA
Mansfield, B., and J. Hoffman. 1978.
Spill Technology Newsletter 3(6):19-23.

Contingency planning, Spill cleanup, Spill response, Industries, Pollution control, Beaufort Sea, Canada

Canadian government and industry have coordinated their efforts to form the "Government Contingency Plan for Major Oil Spills in the Beaufort Sea." In the event of a major spill, judged to be beyond the handling capabilities of operator and supporting industry, the plan is activated to involve all available government resources together with those of the private sector.

79B-0448
OIL SPILL PREVENTION AND CONTROL IN AUSTRALIA
Manuell, R.W. 1979.
1979 Oil Spill Conference (Prevention, Behavior, Control, Cleanup), Los Angeles, 19-22 March 1979. Washington, DC, American Petroleum Institute, 1979. p. 293-297. (API Publication No. 4308)

Contingency planning, Spill cleanup, Dispersants, Pollution control, Foreign governments, Oil industry, Australia

Current Australian industry and government oil spill response plans, as well as earlier plans, are described. Conditions unique to Australia dictated a dispersant-oriented approach to spill control in the 1960's and this continues to be the main defense against oil spills in Australian waters, although other methods are now also employed. Possible future developments in pollution control are discussed.

79B-0449
COLD REGIONS SPILL RESPONSE
Marsh, G.D., L.A. Schultz, and F.W. DeBord. 1979.
1979 Oil Spill Conference (Prevention, Behavior, Control, Cleanup), Los Angeles, 19-22 March 1979. Washington, DC, American Petroleum Institute, 1979. p. 355-358. (API Publication No. 4308)

Spill response, Ice, Arctic, Subarctic regions, Spill cleanup, Equipment, Behavior, USCG, Alaska

A systems analysis was performed by ARCTEC, Inc. to identify system requirements for responding to oil spills in ice-infested waters. Six spill scenarios were selected for analysis to encompass the range of environmental and spill conditions likely in Alaskan waters, and system modifications required for seasonal response in the lower 48 states were specified. It was found that response operations could be divided into three groups: 1) Those for spills in shorefast ice; 2) those for spills in thick, concentrated broken ice; and 3) those for thin broken ice in open waters.

B. OIL POLLUTION PREVENTION AND CONTROL

79B-0450
"THE GLOBAL HOPE IS AGROUND"--AN INCIDENT AT SALEM SOUND
Mathews, K.W. 1976.
1979 Oil Spill Conference (Prevention, Behavior, Control, Cleanup), Los Angeles, 19-22 March 1979. Washington, DC, American Petroleum Institute, 1979. p. 127-132. (API Publication No. 4308)

Spill response, Spill cleanup, Contingency planning, Tankers, Government agencies, USCG, Liability, Massachusetts, *Global Hope spill

A detailed chronology of events surrounding the 6 February 1978 grounding of the Greek tanker Global Hope on the coast of Massachusetts is given. The grounding, which occurred during the worst blizzard to strike New England in a century, resulted in the spillage of an estimated 315,000 L (83,000 gal) of oil and presented a particularly difficult situation due to the extreme weather conditions. The response activities, including on-scene efforts, state and federal agency participation, and utilization of funds made available under the Federal Water Pollution Control Act, are described and evaluated.

79B-0451
THE ROLE OF RESOURCE MANAGEMENT BIOLOGISTS AT OIL SPILLS
Nadeau, R.J., and J.R. Hanlon. 1978.
Conference on Assessment of Ecological Impacts of Oil Spills, Keystone, Colorado, 14-17 June 1978. American Institute of Biological Sciences, 1978. p. 230-240.

Spill response, Government agencies, Resource management, EPA, *US Fish and Wildlife Service

Official of the EPA and the US Fish and Wildlife Service are the primary members of the Regional Response Team. In this capacity, they serve as advisers and as the environmental watch during oil spill events and cleanup operations. The EPA,by legislative mandate, is concerned for the water quality; the US Fish and Wildlife Service has jurisdiction over migratory waterfowl and protection of endangered species. The roles of these agencies' biologists at oil spills are described.

B. OIL POLLUTION PREVENTION AND CONTROL

79B-0452
SELECTIVE OIL SPILL COMBAT PLANNING FOR OFFSHORE EXPLORATION AND PRODUCTION OPERATION IN THE NORTH SEA
Poley, J.P. 1979.
1979 Oil Spill Conference (Prevention, Behavior, Control, Cleanup), Los Angeles, 19-22 March 1979. Washington, DC, American Petroleum Institute, 1979. p. 641-647. (API Publication No. 4308)

Spill response, Contingency planning, Sources, Predictions, Offshore development, Movement, North Sea, Ekofisk blowout

A definite need exists for selective contingency planning tailored to the particular characteristics of spills in the North Sea. By consideration in advance of such things as source locations, flow rates, oil composition and movement, an advanced scenario can be developed to avoid confusion in an emergency situation. An approach for such planning, based on evidence from the Ekofisk blowout, is developed in this paper.

79B-0453
CRISIS SCIENCE: INVESTIGATIONS IN RESPONSE TO THE ARGO MERCHANT OIL SPILL
Pollack, A.M., and K.D. Stolzenbach. 1978.
Cambridge, Massachusetts Institute of Technology, Report No. MITSG-78-8. 328 p.

Argo Merchant spill, Environmental effects, Guidelines, Spill response, Contingency planning, *Scientific response

Over 200 scientists were involved in predicting and studying the fate and effects of the Argo Merchant oil spill, at a cost exceeding $80,000. Despite the size of the scientific response, the follow-up research program was not as good as it could have been, partly due to the limited understanding of oil spills, the limited ability to interpret data, and logistical and institutional factors. A rapid and efficient response after a spill is needed to prevent valuable data from being lost, and to provide scientific input into the cleanup effort in a timely manner. Research contingency planning is needed, and this report concludes with some guidelines for formulation of a research contingency plan.

B. OIL POLLUTION PREVENTION AND CONTROL

79B-0454
CLEAN GULF ASSOCIATES - SIX YEARS LATER
Shipman, E.D. 1979.
1979 Oil Spill Conference (Prevention, Behavior, Control, Cleanup), Los Angeles, 19-22 March 1979. Washington, DC, American Petroleum Institute, 1979. p. 237-244. (API Publication No. 4308)

Spill cooperatives, Contingency planning, Personnel training, Spill cleanup, Equipment, Spill response, Gulf of Mexico

Additions to and improvements in the emergency equipment stockpile maintained by Clean Gulf Associates, an oil spill cooperative of ~60 oil and gas operators in the Gulf of Mexico, since its establishment in 1972, are described. Among the new acquisitions are a radio communication system designed for use during cleanup operations and a self-propelled skimmer for cleanup in shallow water. A training program in the use of the cleanup equipment is outlined.

79B-0455
TEN-YEAR OVERVIEW OF OIL SPILL CLEANUP AT SEA
White, I.C., J.A. Nichols, and M.J. Garnett. 1979.
1979 Oil Spill Conference (Prevention, Behavior, Control, Cleanup), Los Angeles, 19-22 March 1979. Washington, DC, American Petroleum Institute, 1979. p. 247-251. (API Publication No. 4308)

Spill response, Contingency planning, Spill cleanup, Equipment, Dispersants, Spreading, Oceans, Shorelines

This paper provides evidence that the capability for combatting oil spills in the high seas has improved little over the past ten years. The response options available for dealing with spills, including the "do nothing" approach, are evaluated, and reasons for the lack of progress in this area are identified. Stressed are the importance of rapid assessment of the spill situation and potential consequences, the requirements for effective contingency planning, and the need for proper organization and control of the response effort.

79B-0456
CLEANUP OF 32,000-BARREL CRUDE OIL SPILL AT THE WEST HACKBERRY DOME STORAGE SITE IN LOUISIANA
Wilson, J.E., and J. Gallagher. 1979.
1979 Oil Spill Conference (Prevention, Behavior, Control, Cleanup), Los Angeles, 19-22 March 1979. Washington, DC, American Petroleum Institute, 1979. p. 437-440. (API Publication No. 4308)

Spill response, Spill cleanup, Strategic Petroleum Reserve, Equipment, Booms, Skimmers, Storage, Contingency planning, Louisiana

B. OIL POLLUTION PREVENTION AND CONTROL

Spill containment and recovery actions taken after a fire at the title strategic Petroleum Reserve caused over 30,000 bbl of oil to be discharged into an adjoining lake are described. Favorable wind conditions facilitated recovery activities although backup plans were implemented to provide protection in the event of a change in the weather. The recovery of almost all of the spilled oil represented a "textbook" spill response operation.

6. Legal and Regulatory Aspects

79B-0457
MARINE OIL POLLUTION. THE INTERNATIONAL LEGAL REGIME RELATING TO THE PREVENTION OF MARINE BASED OIL POLLUTION
Abecassis, D.W. 1976.
University of Cambridge, Department of Land Economy, 1976. (Occasional Paper No. 6). 123 p.

International agreements, Legislation, Pollution prevention, Oceans

Summary not available.

[from Environmental Health and Pollution Control 13(3):#542. 1978]

79B-0458
PENALTIES ON OIL SPILLS WITH UNQUANTIFIED DAMAGE - THE HIDDEN TAX AND ECONOMIC DETERRENT CONCEPT
Cahill, E.J., L. R. Smith, and G.P. Haley. 1979.
1979 Oil Spill Conference (Prevention, Behavior, Control, Cleanup), Los Angeles, 19-22 March 1979. Washington, DC, American Petroleum Institute, 1979. p. 95-97. (API Publication No. 4308)

Regulations, Legislation, Cost analysis, Oil spills, Compensation, Economic effects, Alaska, US

The title paper discusses counterproductive aspects of certain regulations which impose penalties on oil spillers based on unquantified damages. The author feels that laws such as Alaska's are of this category and do little but raise consumer prices and discourage development of needed oil supplies. Such laws are contrary to the prevailing US legal philosophy that the extent of injury must be proven prior to awarding of damages.

B. OIL POLLUTION PREVENTION AND CONTROL

79B-0459
DAMAGE ASSESSMENT RULEMAKING: ISSUES AND ALTERNATIVES
DuBey, R.A. and E.R. Fidell. 1979.
1979 Oil Spill Conference (Prevention, Behavior, Control, Cleanup), Los Angeles, 19-22 March 1979. Washington DC, American Petroleum Institute, 1979. p. 79-89. (API Publication No. 4308)

Oil spills, Legislation, Cost analysis, Liability, Compensation, Economic effects

This paper examines the seriousness of legal and scientific issues of pending policy decisions relative to assessment of oil pollution damage. Included in the discussion are such issues as the need for preemption of state law, the evidentiary status of these guidelines or values, the procedural rights in the rulemaking process, and the assignment of administrative responsibility within the federal government.

79B-0460
THE PRACTICAL ASPECTS OF LITIGATING AN OIL SPILL (PLAINTIFF VIEWPOINT)
Dubiel, E.J. 1979.
1979 Oil Spill Conference (Prevention, Behavior, Control, Cleanup), Los Angeles, 19-22 March 1979. Washington, DC, American Petroleum Institute, 1979. p. 91-94. (API Publication No. 4308)

Oil spills, Cost analysis, Liability, Compensation, Economic effects, *Litigation

The approach to oil spill litigation should be to catalogue all laws that apply or could apply and include these in allegations, immediately prepare evidence and discovery of all facts supporting allegations, inventory damaged items, determine the method of proof of damage, and secure expert witnesses and documentation to prove claims.

79B-0461
FEDERAL LEGISLATION REGARDING OIL POLLUTION LIABILITY FUNDS
Ellis, J. 1977.
Oil and Aquatic Ecosystems, Tanker Safety, and Oil Pollution Liability. Proceedings of the Cordova Fisheries Institute, held in Cordova, Alaska on April 1-3, 1977. B. Melteff (ed.). University of Alaska and Alaska Sea Grant Program, Report 77-8. p. 189-192. (NTIS Report PB-277 060)

Legislation, US, Liability, International agreements, Trans-Alaska pipeline, Tankers, Economic effects, Regulations

The author briefly discusses current international initiatives regarding liability and a fund to cover liability; the liability fund established under the Trans-Alaska Pipeline Act; and the proposed US Superfund legislation. One superfund bill would establish a fund with a $200 million maximum to be administered by the Department of Transportation. The

liability established in the act is $150/ton for vessels that do not carry oil and $500,000 or $300/ton, whichever is greater, for vessels that do carry oil.

79B-0462
A LEGAL OVERVIEW OF CLEANUP OPERATIONS
Evans, J.A. 1979.
1979 Oil Spill Conference (Prevention, Behavior, Control, Cleanup), Los Angeles, 19-22 March 1970. Washington, DC, American Petroleum Institute, 1979. p. 75-77. (API Publication No. 4308)

Spill cleanup, Cost analysis, Liability, Legislation, US government

"It appears in the area of oil spill cleanup that the government has relied almost exclusively on the stick, with the carrot being practically non-existent."

79B-0463
FROM TORREY CANYON TO EKOFISK: A STUDY OF LEGISLATION BY CRISIS
Fitzmaurice, V. 1978.
Conference on Assessment of Ecological Impacts of Oil Spills, Keystone, Colorado, 14-17 June 1978. American Institute of Biological Sciences, 1978. p. 58-82.

Legislation, Oil spills, Compensation, Environmental management, Pollution control, UK

The author discusses the development of British law enacted to protect the marine environment from damage caused by oil. The legal framework intended to prevent accidental and operational discharges of oil from offshore petroleum developments is examined and compensation schemes for pollution damage are explained. Factors which have shaped the present law and those which may influence the future British regime of marine pollution are emphasized.

79B-0464
THE OCS IN ALASKA
Hoffman, E.J. 1977.
Oil and Aquatic Ecosystems, Tanker Safety, and Oil Pollution Liability. Proceedings of the Cordova Fisheries Institute held in Cordova, Alaska on April 1-3, 1977. B. Melteff (ed.). University of Alaska and Alaska Sea Grant Program, Report 77-8. p. 5-6. (NTIS Report PB-277 060)

OCS, Environmental management, Regulations, Legislation, Alaska

Uncertainty earmarks the status of the OCS program. Three events which the author predicted would affect the OCS program nationally, and

specifically Alaska, were President Carter's energy message of 20 April 1977, the DOE approval which establishes policy and some regulatory responsibility concerning OCS, and Senate Bill 9 which amends the OCS Lands Act.

79B-0465
MARINE POLLUTION AND INTERNATIONAL LAW
Ketchum, B.H. 1976.
Proceedings of the Third International Biodegradation Symposium. J.M. Sharpley and A.M. Kaplan (eds.). London, Applied Science Publishers Ltd., 1976. p. 11-19.

International conventions, Regulations, IMCO, Oil transport, Tankers, Sources, Fate, Biological effects, *London Dumping Convention

A brief history of international action regarding marine pollution is given. The IMCO Conventions and the London Dumping Convention are considered in some detail. Differences in the persistence and toxicity of different types of pollutants are recognized by the conventions, and the regulations reflect these differences.

79B-0466
LAW OF THE SEA NEGOTIATIONS: AN IMPASSE AND AN OPPORTUNITY
Krueger, R.B. 1976.
Marine Technology Society Journal 11(2):33-36.

Resource management, International conventions, Legislation, Foreign governments, Regulations, *Law of the Sea

Law of the Sea negotiations are at an impasse regarding use and control of the deep seabeds. Agreement on this issue would provide a basis for resolution on a number of other issues, while "going it alone" on the part of either industrialized nations or less developed nations may create more problems than those confronting the conference, that of arriving at an equitable allocation formula for deep ocean resources. Various formats proposed, objections, previous issue development, and specific US proposals are briefly discussed. [possibly oil pollution related]

B. OIL POLLUTION PREVENTION AND CONTROL

7. General Prevention and Control Measures

79B-0467
JAPANESE GOVERNMENTAL AND INDUSTRIAL MEASURES FOR THE CONTROL OF MARINE OIL SPILLS
Funatani, C. 1979.
1979 Oil Spill Conference (Prevention, Behavior, Control, Cleanup), Los Angeles, 19-22 March 1979. Washington, DC, American Petroleum Institute, 1979. p. 261-267. (API Publication No. 4308)

Pollution control, Spill cleanup, Foreign governments, Government agencies, Legislation, Regulations, Equipment, Contingency planning, Japan

The legal and organizational structure for the control of oil spills in Japan is described. Among the agencies involved in control operations is the industrially sponsored Marine Disaster Prevention Center (KSB Center) whose functions include maintaining and stockpiling cleanup equipment, providing training for disaster control and prevention, and conducting research on disaster and spill control technology. A list of the cleanup equipment and materials stockpiled in Japan, and their environmental capabilities, is provided.

79B-0468
ENVIRONMENTAL STANDARDS. A DESCRIPTION OF UNITED KINGDOM PRACTICE
Department of the Environment, UK. 1977.
London, Her Majesty's Stationery Office, 1977. v + 30 p. (Pollution Paper No. 11)

Pollution control, Tankers, Oil discharges, Pollution prevention, Government agencies, UK

This pamphlet outlines the United Kingdom policies on pollution control. Oil discharges from tankers are briefly discussed in a section on marine pollution.

79B-0469
OIL SPILL COUNTERMEASURES--A RATIONAL SYSTEM FOR SELECTION AND SIZING OF EQUIPMENT
Fraser, J.P. 1979.
1979 Oil Spill Conference (Prevention, Behavior, Control, Cleanup), Los Angeles, 19-22 March 1979. Washington, DC, American Petroleum Institute, 1979. p. 253-255. (API Publication No. 4308)

Spill response, Equipment, Risk analysis, Contingency planning, Models, Booms, Skimmers, *Computer simulations

B. OIL POLLUTION PREVENTION AND CONTROL

The title system involves: 1) Risk analysis, in which the types and sizes of potential oil spills and the geographical, meteorological, and oceanographic conditions in probable spill locations are considered; 2) development of hypothetical spill scenarios to aid in identifying problems likely to be encountered in the logistics, deployment, and operation of equipment under different circumstances; and 3) sizing and selection of cleanup equipment to meet the needs identified in the previous steps. Computer programs which may be valuable in the development of oil spill countermeasures are described.

79B-0470
RADIOTRACER APPLICATIONS IN PETROLEUM REFINERY POLLUTION CONTROL
Fries, B.A. 1976
Measurement, Detection and Control of Environmental Pollutants. Proceedings of a Symposium, Vienna, 15-19 March 1976. Vienna, International Atomic Energy Agency, 1976. p. 609-620.

Pollution control, Detection, Monitoring, Wastewaters, Refineries, Oil discharges, *Radiotracer techniques

A series of studies are described in which radiotracer techniques were applied to the measurement of refinery effluent flow rates to determine the degree to which water quality standards were being met. The study facilitated the identification of deficiencies in the effluent system, and necessary modifications were made as a result.

79B-0471
PROCEEDINGS OF THE WATER POLLUTION CONTROL WORKSHOP, OCTOBER 27-9, 1976.
Goodwin, G.L (ed.). 1976.
Adelaide, Australia, Techsearch, Inc., 1976. 160 p.

Pollution prevention, Pollution control, Foreign governments, Australia, *Proceedings

Summary not available. [possibly oil pollution related]

[from Chemical Abstracts 88(22):#158237j. 1978]

B. OIL POLLUTION PREVENTION AND CONTROL

79B-0472
ECONOMIC EVALUATION OF THE ENVIRONMENTAL EFFECTS OF OIL POLLUTION - A PRACTICAL LESSON USING THREE CASE HISTORIES
Juhasz, F. 1979.
1979 Oil Spill Conference (Prevention, Behavior, Control, Cleanup), Los Angeles, 19-22 March 1979. Washington, DC, American Petroleum Institute, 1979. p. 53-58. (API Publication No. 4308)

Tankers, Segregated ballast, Cost analysis, Oil spills, Pollution prevention, Economics

The title study basically concluded that the potential environmental/economic benefits of retrofitting the existing tanker fleet with segregated ballast tanks were relatively small. However, while marginal changes in oil pollution levels might be insignificant, the long-term effect would be important. For the areas analyzed, the severe lack of data relative to physical damage means that results are site specific and cannot be generalized for other areas.

79B-0473
FACTORS BEARING ON POLLUTION CONTROL IN U.S. PORTS LOCATED IN ESTUARINE AREAS
Langlois, E. 1977.
Estuarine Pollution Control and Assessment: Proceedings of a Conference [Pensacola, Florida, 11-13 February 1975]. Washington, DC, US Environmental Protection Agency, Office of Water Planning and Standards, 1977. Vol. 2:529-551. (Report EPA-440-1-77-007)

Pollution control, Ports, Development, Disposal, Wastewaters, Estuaries, Regulations, US, Industries, Government agencies, Environmental protection

This paper points out the need for additional attention to the effects that port development will have on the existing and future ecology of estuarine areas. Current federal pollution control policies in regard to disposal of oily waste and ballast water in port facilities are summarized. The need for a clearer definition of the responsibilities of industry and government is pointed out.

79B-0474
HANDBOOK OF POLLUTION CONTROL MANAGEMENT
Lund, H.F. (ed.). 1978.
Englewood Cliffs, New Jersey, Prentice-Hall, Inc., 1978. 444 p.

Industries, Pollution control, Economics, Legislation, Regulations, Wastewater treatment, *Management, *Handbook

B. OIL POLLUTION PREVENTION AND CONTROL

This handbook is a guide to management planning in industry for the wise and effective expenditure of funds on pollution abatement operations. The book is organized according to a "logic diagram" which details the sequence of steps involved in evaluating and implementing pollution control systems. A variety of pollution problems, including wastewater treatment, are specifially addressed in a section devoted to technical considerations (possibly oil pollution related]

79B-0475
MARINE ENVIRONMENTAL PROTECTION IN THE SOVIET UNION
McClelland, J.J., Jr. 1979.
1979 Oil Spill Conference (Prevention, Behavior, Control, Cleanup), Los Angeles, 19-22 March 1979. Washington, DC, American Petroleum Institute, 1979. p. 277-281. (API Publication No. 4308)

Regulations, Legislation, Foreign governments, Government agencies, Law enforcement, Contingency planning, Spill cleanup, Equipment, Black Sea, USSR

The agencies and regulations governing pollution prevention and cleanup practices in the Soviet Union are outlined. Oil Spill response plans for the Black Sea-Azov Basin and the cleanup equipment stocked in the Soviet Union are described.

79B-0476
BIODETERIORATION OF MEMBRANE SEPARATORS FOR USE IN AN OIL POLLUTION PREVENTION SYSTEM
May, M.E., and R.A. Neihof. 1977.
Report AD-A050121. 59 p.

Oil-water separation, Equipment, Pollution prevention, Ballast, Tankers, Filtration, Design-engineering

Prototype membranes for possible use in ballast water/oil separation have been tested for resistance to microbial deterioration. Fabric reinforced elastomer composites of two types were tested: Neoprene/nylon fabric/neoprene and Hydrin/nylon fabric/Hydrin. Miscroscopic cracks were noted in the Hydrin/nylon Hydrin composite, while the neoprene/nylon fabric/neoprene composite appeared promising if pinholes and open edges at seams are minimized.

B. OIL POLLUTION PREVENTION AND CONTROL

79B-0477
METHOD AND APPARATUS FOR CONTROLLING A WELL DURING DRILLING OPERATIONS
Otis Engineering Corporation. 1978.
US Patent 4,076,083

Blowout prevention, Drilling, Equipment, Design-engineering, Patent

A blowout preventer system is described for use in a well with a well casing, a drill string in the well casing, and a drill bit on the lower end. The system includes a valve assembly which selectively changes drilling fluid circulation from normal parallel circulation throughout the drill string, to contolled circulation bypassing the packer when the packer assembly is activated. Facilities are included which actuate the packer to seal the annulus between the drill string and the well, and for controlling the well assembly means.

[from Underwater Information Bulletin 10(5):#78/10/15. 1978]

4,076,083
METHOD AND APPARATUS FOR CONTROLLING A WELL DURING DRILLING OPERATIONS
Philip S. Sizer, Dallas, Tex., assignor to Otis Engineering Corporation, Dallas, Tex.
Filed Nov. 24, 1975, Ser. No. 634,824
Int. Cl.[2] E21B *23/04, 33/127, 41/00*
U.S. Cl. 175—65 38 Claims

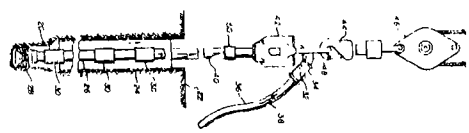

79B-0478
PREVENTION AND CONTROL OF MARINE OIL POLLUTION. REGIONAL MARINE OIL POLLUTION CONFERENCE - AUSTRALIA, BRISBANE, 8-10 NOVEMBER 1976.
Petroleum Institute Environmental Conservation Executive. 1976. North Sydney, Petroleum Institute Environmental Executive, 1976. 243 p.

Pollution prevention, Pollution control, Marine environment, Australia

Summary not available.

[from Marine Pollution Research Titles 4(3):#468. 1977]

B. OIL POLLUTION PREVENTION AND CONTROL

79B-0479
THE SPREADING, RETENTION, AND CLEAN-UP OF OIL SPILLS
Wilson, M.P., et al. 1978.
University of Rhode Island Report HCP/P2756-01, Contract No. (11-1) 2756.
126 p.

Spill containment, Spill cleanup, Pollution prevention, Ships, Tankers, Sources, Statistics, Biodegradation, Dispersion, Oil slicks, Spreading, Equipment

"This study reviews and assesses the technological state of the art of oil spill spreading, retention and clean-up and proposes research needs in these areas. Sources of oil spills are analyzed and the difficulty of gathering meaningful statistics is discussed. Barrier technology is reviewed and problem areas analyzed. Natural and forced biodegradation and natural and chemical dispersion of oil spills are presented. Research recommendations are categorized under the following two headings (1) Preventive Techniques and (2) Containment, Clean-up and Dispersion."

C. ENVIRONMENTAL IMPACTS OF OIL POLLUTION

1. Biological Aspects

79B-0480
COMPARATIVE UPTAKE OF NAPHTHALENES FROM WATER AND OILED SEDIMENT BY BENTHIC AMPHIPODS
Anderson, J.W., S.L. Kiesser, and J.W. Blaylock. 1979
1979 Oil Spill Conference (Prevention, Behavior, Control, Cleanup), Los Angeles, 19-22 March 1979. Washington, DC, American Petroleum Institute, 1979. p. 579-584. (API Publication No. 4308)

Hydrocarbons, WSF, Sediments, Uptake, Release, Amphipods, *Naphthalenes, *Biomagnification

The benthic amphipod, Anonyx laticoxae, was exposed to whole oil on sediments or water extracts of Prudhoe Bay crude oil under static and flowing conditions. The only class of compounds measured in water, tissues and sediments was naphthalenes. Tissue magnification of naphthalenes was least during sediment exposure (2-4 times), intermediate during static exposure (10-50 times), and greatest during flowing water exposure (1000 times). Results indicate that bioavailability of naphthalenes is via interstitial and water column contamination. Release of naphthalenes from oiled sediments and tissues appears to be related to the water solubilities of the oil components.

79B-0481
LABORATORY AND FIELD STUDIES ON THE LONG TERM EFFECTS OF PETROLEUM HYDROCARBONS ON BENTHIC MARINE INVERTEBRATES
Anderson, J.W., P. Riley, R.M. Bean, J.W. Blaylock, and S.L. Kiesser. 1977.
Battelle Pacific Northwest Laboratories, Report CONF-770345-1, Contract EY-76-C-06-1830. 33 p. (Workshop on the Interagency Marine Research Associated With Energy, Newport, Rhode Island, 1 March 1977.)

Chronic effects, Crude oil, Benthos, Marine organisms, Invertebrates, Hydrocarbons, Sediments, Biodegradation, Uptake

Interdisciplinary studies are being conducted on the fate of crude oil in sediments. Principal objectives are to determine the rates and mechanisms of degradation of petroleum in the marine environment, to determine persistent component types, and to correlate such information, wherever possible, with observed effects on biota. Preliminary results of studies of hydrocarbon uptake from sediment by benthic organisms are included.

[from Report NTIS/PS-78/0193. p. 5. 1978]

C. ENVIRONMENTAL IMPACTS OF OIL POLLUTION

79B-0482
THE EFFECTS OF THE BARGE STC-101 OIL SPILL ON SHALLOW WATER INVERTEBRATES OF LOWER CHESAPEAKE BAY
Ayers, R.W. 1978.
Conference on Assessment of Ecological Impacts of Oil Spills, Keystone, Colorado, 14-17 June 1978. American Institute of Biological Sciences, 1978. p. 280-310.

Biological effects, Benthos, Invertebrates, Intertidal zone, Ships, Fuel oil, Chesapeake Bay, *Barge STC-101 spill

About 946,000 L (250,000 gal) of No. 6 fuel oil spilled into lower Chesapeake Bay from the Barge STC-101 on 2 February 1976. This paper evaluates the effects of the spill on benthic macro-invertebrate populations. Results indicate that no attributable effect was detected at subtidal stations; intertidal areas may have been damaged to some degree.

79B-0483
RESPONSE OF A SUBTIDAL SEDIMENT COMMUNITY TO LOW LEVELS OF OIL HYDROCARBONS IN A NORWEGIAN FJORD
Bakke, T., and T.M. Johnsen. 1979.
1979 Oil Spill Conference (Prevention, Behavior, Control, Cleanup), Los Angeles, 19-22 March 1979. Washington, DC, American Petroleum Institute, 1979. p. 633-639. (API Publication No. 4308)

Hydrocarbons, Sediments, Marine Organisms, Aromatic hydrocarbons, Chronic effects, Marine environment, Norway

For nine months an artificially enclosed, subtidal sandy bottom was exposed to low levels of oil hydrocarbons. Aromatic hydrocarbons did not significantly accumulate, sediment bacterial cell population fluctuation did not correlate with oil stress, decreased grazing by sediment fauna was observed, and nematode population decreased progressively in the oiled sediment. "No significant short term fluctuations were observed in any organism groups studied during exposure periods."

79B-0484
IMPACT OF ESTUARINE POLLUTION ON BIRDS
Blus, L.J., S.N. Wiemeyer, J.A. Kerwin, R.C. Stendell, et al. 1977.
Estuarine Pollution Control and Assessment: Proceedings of a Conference [Pensacola, Florida, 11-13 February 1975]. US Environmental Protection Agency, Office of Water Planning and Standards, 1977. Vol. 1:57-71. (Report EPA-440-1-77-007)

Birds, Biological effects, Estuaries

A literature review with 62 references is presented on the impact of various estuarine pollutants on birds. Nine papers are mentioned which deal specifically with oil pollution effects.

C. ENVIRONMENTAL IMPACTS OF OIL POLLUTION

79B-0485
POTENTIAL LONG-TERM EFFECTS OF PRUDHOE CRUDE OIL IN ARCTIC SEDIMENTS ON INDIGENOUS BENTHIC INVERTEBRATE COMMUNITIES
Busdosh, M., K.W. Dobra, A. Horowitz, S.E. Neff, and R.M. Atlas. 1978. Conference on Assessment of Ecological Impacts of Oil Spills, Keystone, Colorado, 14-17 June 1978. American Institute of Biological Sciences, 1978. p. 856-874.

Invertebrates, Benthos, Crude oil, Toxicity, Acute effects, Sublethal effects, Mortality, Sediments, Amphipods, Arctic

In the title study, toxicity was measured as mortality and as sublethal behavioral changes in feeding, movement, and burrowing activities. Amphipods were selected as the principal bioassay organisms because of their abundance and overall distribution in Arctic marine ecosystems. Results showed that exposure to oiled sediment reduced the survival rate but did not result in major mortality. The difference observed (8%) between mortalities with exposure to fresh oil and weathered oil implicates the lower boiling compounds, which are lost by weathering, as the toxic compounds resulting in mortality.

79B-0486
IN SITU STUDIES OF THE SEASONAL SUCCESSIONAL TRAJECTORIES OF TRANSPLANTED AND EXPERIMENTAL MARINE DIATOM ASSEMBLAGES
Coccetti, G.F. 1976.
New York, City College, Department of Biology, Contract E(11-1)-3254. 152 p. Thesis. (NTIS Report TID-27173.)

Microorganisms, Biological effects, *Community structure, *Diatoms

"A study was made of the underlying mechanisms controlling the structure of natural communities of marine diatoms and transplanted assemblages following exposure to stresses...Heavy metals and oils were found to alter community structure."

[from Energy Information Abstracts 2(8):#20879. 1977]

79B-0487
EXPERIMENTS WITH PETROLEUM HYDROCARBONS
Corner, E.D.S., and R.P. Harris. 1976.
FAO Lectures Presented at FAO/SIDA Training Course on Toxicity Testing, 4th, Lysekil, Sweden, 13 October-29 November 1975. Rome, Food and Agriculture Organization, 1976. p. 181-198. (Report FAO/SIDA/TF-INT 173 (SWE) - Supplement I)

Hydrocarbons, Toxicity, Biological effects

Summary not available.

[from Marine Pollution Research Titles 4(1):#64. 1977]

C. ENVIRONMENTAL IMPACTS OF OIL POLLUTION

79B-0488
BIOLOGICAL EFFECTS OF PETROLEUM ON AQUATIC BIRDS
Eastin, W.C. and D.J. Hoffman. 1978.
Conference on the Assessment of Ecological Impacts of Oil Spills, Keystone, Colorado, 14-17 June 1978. American Institute of Biological Sciences, 1978. p. 560-582.

Birds, Biological effects, Chronic effects, Acute effects, Toxicity, Hydrocarbons, Growth, Reproduction

Certain acute and chronic biological impacts of petroleum and its components in aquatic birds were evaluated. The studies included assessments of embryonic development and hatching success of eggs externally exposed to petroleum and its components, and the effect of oil ingestion on the development of ducklings and on adult reproduction and physiology. The authors conclude that oil spills and oil pollution probably pose the greatest threat to the developmental and reproductive phases of the life cycle of aquatic birds.

79B-0489
EFFECTS OF WATER-SOLUBLE OIL FRACTIONS ON METABOLISM, GROWTH AND CARBON BUDGET OF THE SHRIMP *CRANGON CANGON*
Edwards, R.R.C. 1978.
Marine Biology 46(3):259-265.

Biological effects, Crude oil, WSF, Concentrations, Metabolism, Mortality, Reproduction, Growth, Crustaceans, **Crangon crangon*

Juvenile shrimp, *Crangon crangon* L., were maintained in crude oil WSFs at 10°, 15°, and 20° C. During exposure, reductions in respiration and growth rate were correlated with the strength of the extract. Physiological consequences resulting from exposure are discussed.

79B-0490
PETROLEUM HYDROCARBONS IN ARCTIC RINGED SEALS, *PHOCA HISPIDA*, FOLLOWING EXPERIMENTAL OIL EXPOSURE
Engelhardt, F.R. 1978.
Conference on Assessment of Ecological Impacts of Oil Spills, Keystone, Colorado, 14-17 June 1978. American Institute of Biological Sciences, 1978. p. 613-628.

Marine mammals, Hydrocarbons, Contamination, Crude oil, Absorption, Metabolism, Uptake, Release, **Phoca hispida*

The title species showed rapid absorption and clearing of hydrocarbons from Norman Wells crude oil in body tissues and fluids when exposed experimentally by immersion and ingestion. Fluorometric measurements indicated relatively low but significant levels of hydrocarbons in tissues, blood, and plasma following external exposure. Levels in bile and urine were higher, indicating these to be the routes of excretion.

C. ENVIRONMENTAL IMPACTS OF OIL POLLUTION

79B-0491
THE BIOLOGICAL EFFECTS OF OIL SPILLS (A BIBLIOGRAPHY WITH ABSTRACTS)
Harrison, E.A. 1978.
Report NTIS/PS-78/0193. _ p. Report for 1964-Feb. 1978. (Supersedes Report NTIS/PS-77/0200, and NTIS/PS-76/0033.)

Oil spills, Biological effects, Metabolism, Microorganisms, Plants, Animals, Freshwater, Seawater, Bibliographies

This bibliography covers biological effects of oil spills in saltwater and freshwater. Included are papers on effects on microorganisms, plants, and animals and research on the residues and metabolic products of various oil components. Of the 242 abstracts included in this listing, 51 are new entries.

79B-0492
THE EFFECTS OF PETROLEUM ON AQUATIC ORGANISM: A MULTIDISCIPLINARY APPROACH
Hawkes, J.W. 1977.
Oil and Aquatic Ecosystems, Tanker Safety, and Oil Pollution Liability. Proceedings of the Cordova Fisheries Institute held in Cordova, Alaska on April 1-3, 1977. B. Melteff (ed.). University of Alaska and Alaska Sea Grant Program, Report 77-8. p. 87-97. (NTIS Report PB-277 060)

Marine mammals, Arctic, Subarctic regions, Biologial effects, Toxicity, Metabolism

The title study was designed to determine the effects of petroleum on subarctic and arctic marine mammals. Chemistry, morphology, physiology, pathology, and behavior were used to evaluate alterations of the animals from exposure to petroleum. Results of completed studies are presented.

79B-0493
RELATIONSHIP OF HYDROCARBON SOLUBILITY TO TOXICITY IN ALGAE AND CELLULAR MEMBRANE EFFECTS
Hutchinson, T.C., J.A. Hellebust, D. Mackay, D. Tam and P. Knauss. 1979.
1979 Oil Spill Conference (Prevention, Behavior, Control, Cleanup), Los Angeles, 19-22 March 1979. Washington, DC, American Petroleum Institute, 1979. p. 541-547. (API Publication No. 4308)

Algae, Hydrocarbons, Toxicity, Solubility, Biological effects, *Cell membrane

The title study indicates that the molar hydrocarbon concentration required to cause a 50% reduction in ^{14}C uptake in unicellular green algae is a linear function of the solubility of the hydrocarbon. A high correlation between toxicity and partition coefficients was also found. Partitioning into and disruption of the cellular membrane by the hydrocarbons was proposed as a possible mechanism for their toxicity. Potassium, magnesium, and ^{14}C leakage in hydrocarbon-treated cells were examined to test this hypothesis and the results are reported.

C. ENVIRONMENTAL IMPACTS OF OIL POLLUTION

79B-0494
EFFECTS OF NO. 2 FUEL OIL ON CHEMICALLY-EVOKED FEEDING BEHAVIOR OF THE MUD SNAIL, ILYANASSA OBSOLETA
Hyland, J.L., and D.C. Miller. 1979.
1979 Oil Spill Conference (Prevention, Behavior, Control, Cleanup), Los Angeles, 19-22 March 1979. Washington, DC, American Petroleum Institute, 1979. p. 603-607. (API Publication No. 4308)

Toxicity, Fuel oil, WSF, Sublethal effects, Behavior, Mollusks, *Feeding, *Chemoreception, *Ilyanassa obsoleta

Arousal and extension of the proboscis were used as criteria for determining the effects of No. 2 fuel oil on feeding behavior in the title organism. The initial perception of food (arousal) was significantly inhibited after 48 hr exposure to low oil concentrations, while tasting (proboscis extension) was inhibited only after 1 month.

79B-0495
EFFECTS OF SEAWATER EXTRACT OF EKOFISK OIL ON HATCHING SUCCESS OF BARENTS SEA CAPELIN
Johannessen, K.I. 1976.
ICES C. M. Pap. Rep., No. E:29. 12 p.

WSF, Crude oil, Fish, Biological effects, Reproduction, Barents Sea, *Hatching

Summary not available.

[from Marine Pollution Research Titles 4(6):1051. 1977]

79B-0496
ON A ROLE OF CAROTENOIDS IN TOLERANCE OF SEA MOLLUSKS TO ENVIRONMENTAL POLLUTION
Karnaukhov, V.N., N.Y. Milovidova, and I.N. Kargopolova. 1977.
Comparative Biochemistry and Physiology 56A(2):189-193.

Mollusks, Environmental effects, Metabolism, Invertebrates, *Carotenoids

A study of the carotenoid content of various marine mollusk species indicated that those with a high content show greater resistance to marine pollution, including oil, than those with low levels. In addition, the species studied increased their carotenoid levels after exposure to pollution. The results "suggested [the] role of carotenoids in oxidative metabolism of animal cells and in the adaptation of these cells to hypoxic conditions."

C. ENVIRONMENTAL IMPACTS OF OIL POLLUTION

79B-0497
EFFECTS OF LOW LEVELS OF HYDROCARBONS ON EMBRYONIC, LARVAL AND ADULT WINTER FLOUNDER, (PSEUDOPLEURONECTES AMERICANUS)
Kühnhold, W.W., D. Everich, J.J. Stegeman, J. Lake, and R.E. Wolke. 1978 Conference on the Assessment of Ecological Impacts of Oil Spills, Keystone, Colorado, 14-17 June 1978. American Institute of Biological Sciences, 1978. p. 677-711.

Fish, Hydrocarbons, Fuel oil, Biological effects, Contamination, Reproduction, Sublethal effects, Growth, Development, *Pseudopleuronectes americanus

Direct exposure of winter flounder eggs to 100 ppb water-accommodated No. 2 fuel oil resulted in reduced viable hatch when the exposure duration included both fertilization and embryonic development. Hatching was delayed when exposure included contamination of gametes during gonad maturation of adults, and spinal abnormalities appeared in the larvae of these fish. Latent effects on reproductive success can occur even though earlier developmental stages or adults appear unaffected.

79B-0498
THE INTERACTIVE EFFECTS OF PHYSICAL FACTORS AND HYDROCARBON EXPOSURE ON THE SURVIVAL, DEVELOPMENT RATE AND GROWTH OF THE MUD CRAB RHITHROPANOPEUS HARRISII AND THE HORSESHOE CRAB LIMULUS POLYPHEMUS
Laughlin, R.B., Jr. 1977.
Ph.D. Dissertation, Texas A&M University, 1977. 206 p.

WSF, Aromatic hydrocarbons, Fuel oil, Toxicity, Mortality, Sublethal effects, Respiration, Growth, Development, Metabolism, *Rhithropanopeus harissi, *Limulus polyphemus

The interactive effects of temperature, salinity, developmental stage, and No. 2 fuel oil WSF or aromatic hydrocarbon concentration on the survival, respiration, and development of the title organisms were studied. The response of the organisms to osmotic shock during hydrocarbon exposure was also examined. Results generally indicated an increased sensitivity to salinity and temperature changes during hydrocarbon exposure, and a decreased salinity tolerance in exposed organisms. Observed sublethal effects were attributed to interference of membrane-mediated functions by aromatic hydrocarbons.

C. ENVIRONMENTAL IMPACTS OF OIL POLLUTION

79B-0499
THE INTERACTIVE EFFECTS OF TEMPERATURE, SALINITY, AND SUBLETHAL EXPOSURE TO PHENANTHRENE, A PETROLEUM-DERIVED POLYCYCLIC AROMATIC HYDROCARBON (PAH), ON THE RESPIRATION RATE OF JUVENILE MUD CRABS, *RHITHROPANOPEUS HARRISII*
Laughlin, R.B., and J.M. Neff. 1979.
1979 Oil Spill Conference (Prevention, Behavior, Control, Cleanup), Los Angeles, 19-22 March 1979. Washington, DC, American Petroleum Institute, 1979. p. 585-590. (API Publication No. 4308)

Hydrocarbons, PAH, Sublethal effects, Respiration, Toxicity, Crustaceans, *Phenanthrene, **Rhithropanopeus harrisii*

In the title study, mud crabs were exposed for 10 days to various temperature, salinity and phenanthrene concentration combinations. When compared to controls, phenanthrene-exposed animals exhibited marked changes in respiration rates both at steady state and following osmotic shock, and a higher percent body water.

79B-0500
QUANTIFICATION OF PETROLEUM HYDROCARBONS IN SELECTED TISSUES OF MALE MALLARD DUCKLINGS CHRONICALLY EXPOSED TO SOUTH LOUISIANA CRUDE OIL
Lawler, G.C., J.P. Holmes, B.J. Fiorito, J.L. Laseter, and R.C. Szaro. 1978.
Conference on the Assessment of Ecological Impacts of Oil Spills, Keystone, Colorado, 14-17 June 1978. American Institute of Biological Sciences, 1978. p. 583-612.

Birds, Hydrocarbons, Chronic effects, Crude oil, Toxicity, Uptake

Heart, liver, and kidney tissues from male mallard ducklings that had ingested commercial duck starter containing 0.025%, 0.25%, 2.5%, and 5.0% South Louisiana crude oil from hatch to eight weeks were analyzed for their oil hydrocarbon contents. Fifty-five specific saturated and aromatic hydrocarbons were quantified. Individual and total hydrocarbon concentrations relative to oil dosage are discussed in relation to the previously reported toxic responses of the ducklings.

79B-0501
SHORT TERM EFFECTS OF OIL ON PLANKTON IN CONTROLLED ECOSYSTEMS
Lee, R.F., M. Takahashi, and J. Beers. 1978.
Conference on Assessment of Ecological Impacts of Oil Spills, Keystone, Colorado, 14-17 June 1978. American Institute of Biological Sciences, 1978. p. 634-650.

Microorganisms, Plankton, Hydrocarbons, Bacteria, Algae

C. ENVIRONMENTAL IMPACTS OF OIL POLLUTION

A number of changes in plankton populations occurred after the addition of petroleum or its derivatives to CEPEX enclosures. These included increases in bacterioplankton, changes in the phytoplankton population, increases in numbers of rotifers and protozoans, and decreases in ctenophores. Certain species of algae, particularly nanoflagellates and small-celled diatoms (less than 5 μ), appeared to be less susceptible to the effects of oil than larger-celled diatoms.

79B-0502
ON THE EFFECT OF PETROLEUM PRODUCTS ON THE BLACK SEA HYDROBIONTS [in Russian]
Mazmanidi, N.D., G.I. Kovaleva, A.M. Kotov, T.R. Bazhashvili, et al. 1976
Rybnoe Kohzyaistvo (Moscow), No. 5:24-28.

Petroleum products, Biological effects, Marine organisms, Black Sea

Summary not available.

[from Marine Pollution Research Titles 4(5):#861. 1977]

79B-0503
THE EFFECTS OF OIL ON MARINE LIFE: AN OVERVIEW OF RESEARCH SPONSORED BY THE AMERICAN PETROLEUM INSTITUTE
Mertens, E.W., and J.R. Gould. 1976.
International Symposium on Industrial Wates and the Environment, 1st, Caracas, Venezuela, 1976. 16 p.

Biological effects, Crude oil, Contamination, Marine organisms, Chronic effects, Bioassay, API, *Research overview

Some of the significant conclusions of API-sponsored projects are: Marine organisms contaminated by oil rapidly purge themselves once exposure has been terminated; laboratory bioassay data on the toxicity of oils to marine organisms have limited applicability to "real-world" situations; studies on the effects of crude oil on larval stages of the American lobster, Homarus americanus, indicated that survival success of the test organisms was the same as that of controls, at up to 1ppm crude oil in seawater; and that low level chronic exposure to crude oil has negligible effects on marine life.

C. ENVIRONMENTL IMPACTS OF OIL POLLUTION

79B-0504
ACCUMULATION OF PETROLEUM HYDROCARBONS IN A SALT MARSH ECOSYSTEM EXPOSED TO STEADY STATE OIL INPUT
Milan, C.S., and T. Whelan, III. 1978.
Conference on Assessment of Ecological Impacts of Oil Spills, Keystone, Colorado, 14-17 June 1978. American Institute of Biological Sciences, 1978. p. 875-893.

Marshes, Ecosystems, Hydrocarbons, Benthos, Bioindicators, Invertebrates, Chemical analysis, Oil discharges, Monitoring, Aromatic hydrocarbons, *Biomagnification

Various biological components of a salt marsh ecosystem were examined for petroleum hydrocarbon accumulation. A site that has been exposed to steady state oil input for 30 years was compared to two control sites from known pristine areas. Of the three hydrocarbons considered, cycloalkanes and aromatics were found to be better indicators of oil accumulations than n-alkanes. Benthic organisms, oysters and mussels, demonstrated the greatest enrichment of hydrocarbons, while the resident free-swimming *Fundulus grandis* demonstrated the least. A fluorescence spectrophotometric technique is proposed, whereby the analysis of the total aromatic content of benthic organisms can be used for baseline data and monitoring studies after oil spills.

79B-0505
ON THE INFLUENCE OF THE POLLUTION OF ANTHROPOGENIC ORIGIN OF MARINE NEARSHORE AND ESTUARINE WATER ON THE DEVELOPMENT, DISTRIBUTION AND SETTLEMENT OF THE PELAGIC LARVAE OF BOTTOM INVERTEBRATES [English summary]
Mileikovskii, S.A. 1976.
Trudy Instituta Okeanologii, Akademiya Nauk SSSR, Vol. 105:249-270.

Biological effects, Benthos, Invertebrates, Distribution, Development, Coastal waters, Estuaries

Summary not available. [possibly oil pollution related]

[from Marine Pollution Research Titles 4(4):#625. 1977]

79B-0506
THE OCCURRENCE OF "WHITE EYE SYNDROME" IN SHRIMP (*PENAEUS AZTECUS*)
Minchew, C.D., L.R. Brown, and C.M. Ladner. 1979.
1979 Oil Spill Conference (Prevention, Behavior, Control, Cleanup), Los Angeles, 19-22 March 1979. Washington, DC, American Petroleum Institute, 1979. p. 537-539. (API Publication No. 4308)

Biological effects, Sublethal effects, Crude oil, Hydrocarbons, Invertebrates, Crustaceans, *Histology, **Penaeus aztecus*

The development of eye lesions in brown shrimp from experimental ponds to which Empire Mix, Nigerian, or Saudi Arabian crude oils were added was studied. The incidence and severity of the lesions were greater in the Empire Mix-treated ponds than in the others. The histology and a possible mechanism for the development of the lesions are described.

79B-0507
THE ARGO MERCHANT OIL SPILL IMPACTS ON BIRDS AND MAMMALS
Morson, B. 1978.
Conference on Assessment of Ecological Impacts of Oil Spills, Keystone, Colorado, 14-17 June 1978. American Institute of Biological Sciences, 1978. p. 180-195.

Environmental effects, Birds, Marine mammals, Contamination, Argo Merchant spill, Baseline studies, Massachusetts

Of 1121 birds observed in the vicinity of the Argo Merchant spill from 15-24 December 1976, 92% were gulls, approximately 50% of which were oiled. From 16 December to 31 January 1977, 43 sightings of marine mammals were made, and no oiled mammals were observed. Future research priorities for birds and mammals include baseline population studies, studies on effects of oil on reproductive potential and survival, and studies on methods of estimating impacts to populations more accurately.

79B-0508
LETHAL AND SUBLETHAL EFFECTS OF OIL AND DISPERSANT ON YOUNG BAY SCALLOPS ARGOPECTEN IRRADIANS
Ordzie, C., G. Garofalo, and R. Traxler. 1978.
Assessment of Treated vs. Untreated Spills (Interim Report). M.P. Wilson. University of Rhode Island Report HCP/W4047-02, Contract No. E(11-1) 4047. 38 p.

Toxicity, Crude oil, Dispersants, Mortality, Sublethal effects, Mollusks, Biological effects, *Argopecten irradians

In the title study, scallop behavioral response and mortality was measured after exposure to varying doses of Kuwait crude oil and Corexit 9527. At higher concentrations, the dispersant was probably the responsible toxic agent causing scallop mortality. In contrast, "behavioral evidence at sublethal levels suggests that oil, and not dispersant, may be responsible for rendering scallops less effective in their discriminatory abilities" to escape predators.

C. ENVIRONMENTAL IMPACTS OF OIL POLLUTION

79B-0509
ARE PETROLEUM HYDROCARBONS AN IMPORTANT SOURCE OF MUTAGENS IN THE MARINE ENVIRONMENT?
Payne, J.F., R. Maloney, and A. Rahimtula. 1979.
1979 Oil Spill Conference (Prevention, Behavior, Control, Cleanup), Los Angeles, 19-22 March 1979. Washington, DC, American Petroleum Institute, 1979. p. 533-536. (API Publication No. 4308)

Aromatic hydrocarbons, Carcinogens, Sources, Biological effects, Food web, Marine organisms, Marine environment, *AHH

The title study expands on the established theory that the aromatic hydrocarbon hydroxylase enzyme system for activation of hydrocarbons to mutagens (and carcinogens) is present in all phyla of marine animals. Evidence suggests that mutagenic principal(s) in used engine oil is derived from gasoline combustion and thus is only circumstantially related to oil pollution. In general, it is doubtful, conclude the authors, that accidental discharges of petroleum could be an important source of mutagenic activity in the marine environment.

79B-0510
A REVIEW OF OIL TOXICITY STUDIES CONDUCTED AT THE AUKE BAY LABORATORY
Rice, S.D. 1977.
Oil and Aquatic Ecosystems, Tanker Safety, and Oil Pollution Liability. Proceedings of the Cordova Fisheries Institute held in Cordova, Alaska on April 1-3, 1977. B. Melteff (ed.). University of Alaska and Alaska Sea Grant Program, Report 77-8. p. 111-113. (NTIS Report PB-277 060)

Toxicity, Sublethal effects, Mortality, Marine organisms, Crustaceans, Hydrocarbons, Alaska

Oil toxicity studies at the title lab have been conducted since 1971. Laboratory studies focus on lethality of oil components and sublethal effects on marine organims. Two significant conclusions of the studies are (1) crustacean larvae are the most sensitive life stage, especially when molting, and (2) Alaskan species may be more vulnerable to oil than species from warmer waters, because colder temperatures cause toxic aromatics to persist longer. Fifteen different publications are cited from the Auke Bay Laboratory studies.

79B-0511
SENSITIVITY OF 39 ALASKAN MARINE SPECIES TO COOK INLET CRUDE OIL AND NO. 2 FUEL OIL
Rice, S.D., A. Moles, T.L. Taylor, and J.F. Karinen. 1979.
1979 Oil Spill Conference (Prevention, Behavior, Control, Cleanup), Los Angeles, 19-22 March 1979. Washington, DC, American Petroleum Institute, 1979. p. 549-554. (API Publication No. 4308)

WSF, Fuel oil, Crude oil, Toxicity, Marine organisms, Fish, Invertebrates, Intertidal zone, Benthos, Alaska, *Pelagic zone

C. ENVIRONMENTAL IMPACTS OF OIL POLLUTION

Bioassays were performed to assess the toxicities of WSFs of the title oils to 39 fish and invertebrate species. Pelagic organisms were generally more sensitive than benthic or intertidal species, and No. 2 fuel oil was more toxic than Cook Inlet Crude. Although pelagic animals were more sensitive under experimental conditions, intertidal environments are more vulnerable to long-term exposure resulting from an oil spill.

79B-0512
HYDROCARBONS IN BENTHIC INVERTEBRATES FROM THE SOUTHERN CALIFORNIA BIGHT
Rossi, S.S., G.W. Rommel, and A.A. Benson. 1978.
Conference on Assessment of Ecological Impacts of Oil Spills, Keystone, Colorado, 14-17 June 1978. American Institute of Biological Sciences, 1978. p. 821-833.

Invertebrates, Benthos, Hydrocarbons, Contamination, Sampling, OCS, Baseline studies, California

Oil spill assessment should include some evaluation of chemical contamination in affected organisms, particularly for edible species. Such contamination is best evaluated through the study of hydrocarbons. Twenty-six invertebrate species, taken from 60 different sites, were analyzed in this study. Results indicate that a wide distribution of hydrocarbon profiles exists among benthic invertebrates in the study area.

79B-0513
ECOPHYSIOLOGICAL EFFECTS OF OIL SPILLS FROM AMOCO CADIZ ON PELAGIC COMMUNITIES - PRELIMINARY RESULTS
Samain, J.F., J. Moal, J.Y. Daniel, J. Boucher, and J. Lefevre. 1979.
1979 Oil Spill Conference (Prevention, Behavior, Control, Cleanup), Los Angeles, 19-22 March 1979. Washington, DC, American Petroleum Institute, 1979. p. 175-186. (API Publication No. 4308)

Biological effects, Oil spills, Zooplankton, Distibution, Biomass, Hydrocarbons, Estuaries

"First results on distribution and changes of biomass (dry weight and total soluble proteins), physiology (amylase, trypsin) and faunal composition of zooplankton are reported for the two months following the Amoco Cadiz spill on the northern Brittany coast. A shortage of biomass in the Aber area is attributed to hydrocarbons. The low level of the mean value of biomass on the north coasts, and the peculiarities at the estuarine station on Lannion Bay and the Trieux area are reported and discussed."

C. ENVIRONMENTAL IMPACTS OF OIL POLLUTION

79B-0514
ECOLOGICAL EFFECTS OF OIL-DISPERSANT MIXTURES IN FRESH WATERS
Scott, B.F., E. Nagy, J.P. Sherry, B.J. Dutka, et al. 1979.
1979 Oil Spill Conference (Prevention, Behavior, Control, Cleanup), Los Angeles, 19-22 March 1979. Washington, DC, American Petroleum Institute, 1979. p. 565-571. (API Publication No. 4308)

Dispersants, Biological effects, Freshwater, Zooplankton, Bacteria, Fungi, Microorganisms

Studies on a series of experimental spills in artificial ponds indicated that the effects on zooplankton, phytoplankton, bacteria, fungi, and dissolved oxygen were greater in oiled ponds treated with dispersant than in ponds containing oil alone. Oil-dispersant ponds also exhibited enhanced soluble reactive silica levels relative to the oiled and control ponds.

79B-0515
IMPACT OF CRUDE OIL ON PLANKTON FRESHWATER ECOSYSTEMS
Scott, B.F. and D.B. Shindler. 1978.
Conference on the Assessment of Ecological Impacts of Oil Spills, Keystone, Colorado, 14-17 June 1978. American Institute of Biological Sciences, 1978. p. 712-733.

Freshwater, Crude oil, Oil spills, Plankton, Bacteria, Biological effects, Ice, Ecosystems

During the winters of two field seasons, a series of five oil spills, varying in type and amount of crude oils, were conducted in artificial ponds near Ottawa. Phytoplankton, protozoa, zooplankton, and bacteria were monitored. Results indicate that bacterial populations of the treated ponds were enhanced while an ice cover existed, and the enhancement increased after the ice melted. The zooplankton populations diminished only after the ice cover melted.

79B-0516
SOME EFFECTS OF OIL ON ALASKAN MARINE ANIMALS
Shaw, D.G. 1977.
Oil and Aquatic Ecosystems, Tanker Safety, and Oil Pollution Liability. Proceedings of the Cordova Fisheries Institute, held in Cordova, Alaska on April 1-3, 1977. B. Melteff (ed.). University of Alaska and Alaska Sea Grant Program, Report 77-8. p. 77-85. (NTIS Report PB-277 060)

Sublethal effects, Mollusks, Marine organisms, Alaska, *Macoma balthica

Reviewed are laboratory studies of sublethal effects of oil on a small, abundant clam species, Macoma balthica. The clam study was selected to illustrate the type of information available on sublethal effects, and because it is applicable to southcentral Alaska. Results are briefly discussed.

C. ENVIRONMENTAL IMPACTS OF OIL POLLUTION

79B-0517
EFFECT OF NAPHTHALENE AND AQUEOUS CRUDE OIL EXTRACTS ON THE GREEN FLAGELLATE CHLAMYDOMONAS ANGULOSA. III. CHANGES IN CELLULAR COMPOSITION
Soto, C., J.A. Hellebust, and T.C. Hutchinson. 1977.
Canadian Journal of Botany 55(22):2765-2777.

Crude oil, WSF, Biological effects, Algae, Growth, Metabolism, *Naphthalenes, *Chlamydomonas angulosa

In the title study, naphthalene-treated cultures of C. angulosa, cultures treated with aqueous crude oil extracts, and control cultures were observed for changes in major cellular composition during growth. During the exponential phase of nomal growth the cellular content of all major constitutents varied in a rhythmic pattern in response to the growth rate of the cultures. In closed system cultures treated with crude oil extracts, cellular carbohydrate remained constant, total protein decreased significantly, and pigments, cellular total carbon, and lipids increased. In cultures treated with 50% saturated naphthalene medium, pigments and total cellular carbon remained constant, total protein decreased, and carbohydrates and lipids increased. Upon transfer to an open system, cells treated with crude oil extracts recovered more readily than naphthalene-treated cells.

79B-0518
THE INFAUNAL BENTHOS OF PETROLEUM-CONTAMINATED SEDIMENTS: STUDY OF A COMMUNITY AT A NATURAL OIL SEEP
Spies, R.B., P.H. Davis, and D.H. Stuermer. 1978.
Conference on Assessment of Ecological Impacts of Oil Spills, Keystone, Colorado, 14-17 June 1978. American Institute of Biological Sciences, 1978. p. 735-755.

Natural seepage, Benthos, Sediments, Crude oil, Biological effects, Marine organisms, Santa Barbara Channel

A diverse Northria-Tellina assemblage exists in sediments containing 3,300-10,200 ppm of crude oil in the Isla Vista oil seep area near Santa Barbara, California. Community changes over a two-year period were compared with those in a nearby non-seepage area. The faunas are similar, except for the high abundance of oligochaetes in the seep sediments. Several measures indicated relatively less community stability at the seep station.

C. ENVIRONMENTAL IMPACTS OF OIL POLLUTION

79B-0519
THE URQUIOLA OIL SPILL (5/12/76): OBSERVATIONS OF BIOLOGICAL DAMAGE ALONG THE SPANISH COAST
Stein, R.J., E.R. Gundlach, and M.O. Hayes. 1978.
Conference on Assessment of Ecological Impacts of Oil Spills, Keystone, Colorado, 14-17 June 1978. American Institute of Biological Sciences, 1978. p. 311-330.

Biological effects, Invertebrates, Mollusks, Mortality, Benthos, Coasts, Spain, Crude oil, Urquiola spill

On 12 May 1976, the supertanker Urquiola ran aground and spilled nearly 30,000 tons of Persian Gulf crude oil along 215 km of Spanish coastline. Quadrat analyses of a sandy tidal flat, a marsh, and a mud flat indicated that the edible cockle, Cerastoderma edule, and the marsh gastropod, Littorina littorea, were the macrobenthic faunal residents most vulnerable to the effects of the spilled oil. Other species of bivalves (Scrobicularia plana, Tellina tenuis, Venerupus decussata) suffered lower mortalities, ranging from 19-30%.

79B-0520
BIOLOGICAL STUDIES OF THE METULA OIL SPILL
Straughan, D. 1978.
Conference on Assessment of Ecological Impacts of Oil Spills, Keystone, Colorado, 14-17 June 1978. American Institute of Biological Sciences, 1978. p. 365-377.

Metula spill, Biological effects, Intertidal zone, Invertebrates, Distribution, Coasts, Spain

A brief review is presented of biological studies conducted after the Metula spill. The relationship between the distribution and abundance of intertidal invertebrate species and the petroleum in the intertidal quadrats is discussed. The data suggest a continued impact of petroleum in quadrats remaining heavily oiled and recovery of invertebrates in other quadrats where petroleum is being gradually lost.

79B-0521
BIOLOGICAL SURVEY OF INTERTIDAL AREAS OF THE STRAITS OF MAGELLAN IN JANUARY 1975, FIVE MONTHS AFTER THE METULA OIL SPILL
Straughan, D. 1976.
The Metula Oil Spill. C.G. Gunnerson, and G. Peter. 1976. Boulder, Colorado, National Oceanic and Atmospheric Administration, Environmental Research Laboratories, 1976. 57 p. NOAA Special Report. (Appendix B, attached microfiche)

Oil spills, Biological effects, Recovery, Mortality, Intertidal zone, Invertebrates, Detection, Metula spill, Strait of Magellan, Chile

Five months after the spill, a survey showed continuing high concentrations of oil and continued mortality of intertidal invertebrates. In upper marsh areas plants were observed growing again through the oil.

79B-0522
EFFECTS OF CHRONIC CONCENTRATIONS OF PETROLEUM HYDROCARBONS ON GONADAL MATURATION IN STARRY FLOUNDER (PLATICHTHYS STELLATUS [PALLAS])
Whipple, J.A., T.G. Yocom, D.R. Smart, and M.H. Cohen. 1978. Conference on Assessment of Ecological Impacts of Oil Spills, Keystone, Colorado, 14-17 June 1978. American Institute of Biological Sciences, 1978. p. 756-806.

Fish, Uptake, WSF, Crude oil, Growth, Chronic effects, Biological effects, Behavior, *Platichthys stellatus, Development

Adult-starry flounder, during gonadal maturation, were continuously exposed to low concentrations (100-200 ppb) of the WSF of Cook Inlet crude oil for periods of 5, 7, and 21 days. Female flounders accumulated a mean concentration of 12.98 μg/g (ppm) monocyclic, cyclohexane and dicyclic components in mature ovaries. Several changes in behavior and histological damage in ovaries and livers were also observed.

79B-0523
ESTIMATION OF EFFECTS FROM OIL ON INTERTIDAL POPULATIONS: EXPERIMENTAL PERTURBATIONS VERSUS NATURAL VARIATION
Vanderhorst, J.R., J.W. Anderson, P. Wilkenson, and D.L. Woodruff. 1978. Conference on Assessment of Ecological Impacts of Oil Spills, Keystone, Colorado, 14-17 June 1978. American Institute of Biological Sciences, 1978. p. 807-820.

Biological effects, Intertidal zone, Marine organisms, Mollusks, Polychaetes, Uptake, Bioassay

Two experimental approaches to the investigation of effects of oil on intertidal population processes were evaluated in terms of effort required to quantitatively estimate effects of specific magnitudes. One approach used trays of oil-contaminated sediment placed in the low intertidal zone and subsequently treated in laboratory tanks. Three polychaete and two bivalve species were evaluated and results are presented.

C. ENVIRONMENTAL IMPACTS OF OIL POLLUTION

79B-0524
TOXICITY TESTING OF OILS AND OIL DISPERSANTS
White, I.C. 1976.
FAO Lectures Presented at FAO/SIDA Training Course on Toxicity Testing, 4th, Lysekil, Sweden, 13 October-29 November 1975. Rome, Food and Agriculture Organization, 1976. p. 168-180. (Report FAO/SIDA/TF-INT 173 (SWE) - Supplement I)

Chemical analysis, Crude oil, Fuel oil, Petroleum products, Dispersants, Toxicity, Biological effects

Summary not available.

[from Marine Pollution Research Titles 4(1):#84. 1977]

79B-0525
THE EFFECTS OF THE EKOFISK BLOWOUT ON HYDROCARBON RESIDUES IN FISH AND SHELLFISH
Whittle, K.J., P.R. Mackie, J. Farmer, and R. Hardy. 1978.
Conference on Assessment of Ecological Impacts of Oil Spills, Keystone, Colorado, 14-17 June 1978. American Institute of Biological Sciences, 1978. p. 540-559.

Fish, Mollusks, Biological effects, Contamination, Sampling, Benthos, Hydrocarbons, Ekofisk blowout, North Sea

Demersal fish were trawled in the Ekofisk area in May 1977, after the Ekofisk Bravo well was capped and again in July. Cages containing mussels were suspended in the water column near the bottom and recovered a few days later. Although two samples of haddock caught initially showed signs of slight tainting, no taint was detected two months later. On both occasions the alkane concentrations in muscle and liver remained similar to those found some years earlier during a baseline survey of the North Sea.

79B-0526
DOES A PROBLEM EXIST RELATIVE TO SMALL SEA TURTLES AND OIL SPILLS?
Witham, R. 1978.
Conference on Assessment of Ecological Impacts of Oil Spills, Keystone, Colorado, 14-17 June 1978. American Institute of Biological Sciences, 1978. p. 629-633.

Animals, Contamination, Oil spills, Dispersion, Movement, *Sea turtles

Evidence indicates that young green turtles are dispersed by ocean currents. These currents may also disperse oil spills, and some of the residue may float for as long as a year. The possibility exists that green sea turtles may be attracted by visual or chemical stimuli to petroleum at sea. The author identifies a need to study the effects of petroleum on the young of all species of sea turtles.

C. ENVIRONMENTAL IMPACTS OF OIL POLLUTION

2. Physical and Chemical Aspects

89B-0527
EFFECT OF AN OIL SLICK ON WIND WAVES
Liu, H.-T., and J.-T. Lin. 1979.
1979 Oil Spill Conference (Prevention, Behavior, Control, Cleanup), Los Angeles, 19-22 March 1979. Washington, DC, American Petroleum Institute, 1979. p. 665-674. (API Publication No. 4308)

Oil slicks, Sea surface, Physical effects, Models, Dispersion, Environmental effects, *Wind waves

An optical sensor-photodiode wave gauge was developed to investigate vertical dispersion of oil in upper water levels. This instrument, used in conjunction with a mechanical wave maker and No. 2 diesel oil fed at a rate of 0.35 L/sec, indicated damping of windwaves to the point at which waves are sufficiently steep to break, after which the oil has no appreciable effect.

79B-0528
FLAVORS IN FISH FROM PETROLEUM PICKUP
Stansby, M.E. 1978.
Marine Fisheries Review 40(1):13-17.

Petroleum products, Fish, Food web, Absorption, Biological effects, Chemical effects, *Tainting

Petroleum flavors in fish are not all derived from oil in water. Ingestion of other-than-normal diet food, contact with petroleum products in water, and decomposition of the fish are 3 processes which can lead to flavor alteration. Taint flavors can develop in fish by mere contact of the surface of the fish when large amounts of petroleum are involved; this can be simply washed off. Other absorption processes are discussed. Generally, large discrepancies exist between reports by different investigators regarding levels of hydrocarbons and resulting flavor intensities.

C. ENVIRONMENTAL IMPACTS OF OIL POLLUTION

3. Social and Economic Aspects

79B-0529
THE ASSESSMENT OF SOCIO-ECONOMIC EFFECTS OF OIL SPILLS - TOWARDS A METHODOLOGY
Fricke, P. 1979.
1979 Oil Spill Conference (Prevention, Behavior, Control, Cleanup), Los Angeles, 19-22 March 1979. Washington, DC, American Petroleum Institute, 1979. p. 27-36. (API Publication No. 4308)

Socioeconomic effects, Oil spills, Cost analysis, Models, Predictions, Baseline studies

This paper examines the state-of-the-art of socio-economic damage assessment following oil spills. Conclusions are that baseline studies should be developed for high-risk area and that post-spill data must be handled in uniform modes. Development of predictive models is considered and assessed.

79B-0530
PROBLEMS AND PERSPECTIVES IN MEASURING THE SOCIAL COSTS OF OIL POLLUTION
Meade, N.F., and R.C. Anderson. 1979.
1979 Oil Spill Conference (Prevention, Behavior, Control, Cleanup), Los Angeles, 19-22 March 1979. Washington, DC, American Petroleum Institute, 1979. p. 59-62. (API Publication No. 4308)

Oil spills, Economic effects, Social effects, Cost analysis, Environmental effects

Recognizing the difficulty of applying quantitative values to natural resource damage, this paper analyzes the pressing need to develop economic measures for damages caused by oil pollution from three perspectives: accuracy, cost, and acceptability of findings in policy-making and judicial arenas. Such measures should be based on amount and types of oil spilled, the receiving environment and the existing uses made of the environment.

79B-0531
NORTH SEA OIL--A POSSIBLE COROLLARY FOR ALASKA OCS
Morris, R.J. 1977.
Oil and Aquatic Ecosystems, Tanker Safety, and Oil Pollution Liability. Proceedings of the Cordova Fisheries Institute, held in Cordova, Alaska on April 1-3, 1977. B. Melteff (ed.). University of Alaska and Alaska Sea Grant Program, Report 77-8. p. 193-195. (NTIS Report #PB-277-060)

Offshore development, Oil fields, Fisheries, Socioeconomic effects, OCS, North Sea, Gulf of Alaska

C. ENVIRONMENTAL IMPACTS OF OIL POLLUTION

The author briefly reviews those aspects of the North Sea oil field development which are pertinent to the NE Gulf of Alaska, since the two areas are geographically similar. Littering and lost fishing grounds (ranging from 15-85% of the Norwegian continental shelf) cause a greater concern for the commercial fisherman than does oil pollution.

79B-0532
ECONOMIC IMPACT OF THE NEPCO 140 OIL SPILL
Palm, D.J. 1978.
Conference on Assessment of Ecological Impacts of Oil Spills, Keystone, Colorado, 14-17 June 1978. American Institute of Biological Sciences, 1978. p. 268-278.

Economic effects, Compensation, Spill cleanup, Ships, Environmental effects, EPA, St. Lawrence River, *Nepco 140 spill

The US EPA funded efforts to determine the economic and environmental impacts of the Nepco 140 oil spill. This paper describes the methodology used, problems encountered and findings from the impact analysis. Over $8.7 million was expended in the cleanup effort, including compensation for the loss to the recreation and tourism sector due to the spill.

79B-0533
ASSESSMENT OF THE EFFECTS OF POLLUTION ON FISHERIES AND AQUACULTURE IN JAPAN
Tokyo University of Fisheries. 1976.
Rome, Food and Agriculture Organization of the United Nations, 1976. ix + 105 p. (FAO Fisheries Technical Paper No. 163)

Fisheries, Environmental effects, Economic effects, Pollution control, Legislation, Regulations, Japan

A quantitative assessment of the impact of pollution on fisheries in Tokyo Bay and Seto Inland Sea is presented. Oil was found to be the major cause of damage to fisheries, followed by red tide. Although the total catch has not declined, changes in the species composition of the catch has been observed. Pollution control activities are outlined.

C. ENVIRONMENTAL IMPACTS OF OIL POLLUTION

4. Environmental Response and Recovery

79B-0534
APPLICATIONS OF ECOSYSTEM ANALYSIS TO OIL SPILL IMPACT
Cowell, E.B., G.J. Cox, and G.M. Dunnett. 1979.
1979 Oil Spill Conference (Prevention, Behavior, Control, Cleanup), Los Angeles, 19-22 March 1979. Washington, DC, American Petroleum Institute, 1979. p. 517-519. (API Publication No. 4308)

Oil spills, Spill cleanup, Ecosystems, Recovery, Environmental effects, Contingency planning

"Ecologists need to be more involved in selection of oil spill clean-up devices, setting clean-up priorities, and evaluation of clean-up techniques. This paper outlines some basic ecological principles and stresses their proper application to minimize ecological damage and to properly evaluate that damage."

79B-0535
PHYSICAL ASPECTS OF THE OIL SPILL FROM THE SUPERTANKER 'METULA'
Hann, R.W. 1978.
Conference on Assessment of Ecological Impacts of Oil Spills, Keystone, Colorado, 14-17 June 1978. American Institute of Biological Sciences, 1978. p. 354-363.

Recovery, Spill cleanup, Physical effects, Behavior, Fate, Movement, Oil spills, Metula spill, Strait of Magellan

The magnitude of the Metula spill of 9 September 1974 in the Strait of Magellan, coupled with the absence of any cleanup activity, has made the spill serve a valuable role as a test system for observing the recovery from a major spill. Studies of the persistence of the oil in and under beach sands, on cobbled beach surfaces, in the intertidal zone, and in estuaries and marshes have aided in formulating recommendations for control of future spills.

79B-0536
VULNERABILITY OF SHORELINE ENVIRONMENTS TO OIL SPILL IMPACTS
Hayes, M.O. 1977.
Oil and Aquatic Ecosystems, Tanker Safety, and Oil Pollution Liability. Proceedings of the Cordova Fisheries Institute held in Cordova, Alaska on April 1-3, 1977. B. Melteff (ed.). University of Alaska and Alaska Sea Grant Program, Report 77-8. p. 121-131. (NTIS Report PB-277 060)

Coastal waters, Oil spills, Fate, Metula spill, Urquiola spill, Environmental effects, *Vulnerability index

C. ENVIRONMENTAL IMPACTS OF OIL POLLUTION

Two case studies of oil spills, the Metula spill and the Urquiola spill, are briefly described. Based on these studies and a literature survey, a classification of coastal environments with respect to vulnerability to oil spill impacts is discussed. The derived scale relates primarily to the longevity of oil in each environment.

79B-0537
SURVEY OF THE EFFECTS OF THE SETO INLAND SEA OIL SPILL IN 1974
Hiyama, Y. 1979.
1979 Oil Spill Conference (Prevention, Behavior, Control, Cleanup), Los Angeles, 19-22 March 1979. Washington, DC, American Petroleum Institute, 1979. p. 699-707. (API Publication No. 4308)

Leakage, Oil spills, Recovery, Restoration, Water quality, Fuel oil, Fisheries, Japan

"Quick and energetic recovery" of 50,000 bbl of fuel oil from a ruptured refinery tank in 1974 resulted in only temporary negative effects on the adjacent rich fishery and fish culture operations. The survey outlines amounts and paths of spilled oil and specific damages to particular areas of the inland sea between the Okayama prefecture of Honshu and the Nagawa prefecture of Shikoku. Conclusions were based on analysis of hexane extract content (ppm), transparency, dominant phyto- and zooplankton species counts, and average water quality values.

79B-0538
IMPACT OF THE ARGO MERCHANT OIL SPILL ON MACROBENTHIC AND PELAGIC ORGANISMS
Kuhnhold, W.W. 1978.
Conference on Assessment of Ecological Impacts of Oil Spills, Keystone, Colorado 14-17 June 1978. American Institute of Biological Sciences, 1978. p. 152-179.

Benthos, Marine organisms, Fish, Zooplankton, Environmental effects, Tankers, Argo Merchant spill, Massachusetts

Studies on abundance of benthic and pelagic organisms, including commercial fish species, were conducted after the title spill and did not reveal a major adverse impact. At some stations zooplankton was fouled by oil. A summary of the findings is presented, and shortcomings in sampling and methodology are discussed.

C. ENVIRONMENTAL IMPACTS OF OIL POLLUTION

79B-0539
ECOLOGICAL CONSEQUENCES OF PETROLEUM SPILLAGE IN PUERTO RICO
Lopez, J.M. 1978.
Conference on Assessment of Ecological Impacts of Oil Spills, Keystone, Colorado, 14-17 June 1978. American Institute of Biological Sciences, 1978. p. 894-908.

Ecosystems, Environmental effects, Coastal waters, Coral reefs, Vegetation, Puerto Rico, *Rhizophora mangle, *Vulnerability

The relative vulnerabilities of coral reefs, seagrass beds, and mangrove forests, typical coastal environments in Puerto Rico, are reported. Coral reefs are least impacted due to their sub-tidal nature and high energy situation. Beds of the seagrass Thalassia testudinum exhibit relatively minor, short-term effects. Oil coating of fringing stands of the red mangrove Rhizophora mangle and the associated intertidal communities of their prop roots, however, impairs productivity and destroys the attached organisms.

79B-0540
HYDROCARBON DISTRIBUTION AND WEATHERING CHARACTERISTICS AT A TROPICAL OIL SPILL SITE
Page, D.S., D.W. Mayo, J.F. Cooley, E. Sorensen, et al. 1979.
1979 Oil Spill Conference (Prevention, Behavior, Control, Cleanup), Los Angeles, 19-22 March 1979. Washington, DC, American Petroleum Institute, 1979. p. 709-712. (API Publication No. 4308)

Monitoring, Chromatography, Onshore impacts, Biodegradation, Environmental effects, Sediments, Intertidal zone, Biological effects, Restoration, Tropical regions, Recovery, Puerto Rico

Investigations conducted 4 years after the tanker Zoe Colocotroni spilled 37,000 bbl of medium crude off the south shore of Puerto Rico used high resolution gas chromatography of sediment hydrocarbons to assess recovery potential of tropical areas. Findings indicate a more rapid recovery than found in temperate climates, with rapid biodegradation processes present in mangrove ecosystems, a naturally hydrocarbon-rich environment.

79B-0541
MARINE LIFE AND THE AMOCO CADIZ
Southward, A.J. 1978.
New Scientist 79(1112):174-176.

Oil spills, Dispersants, Recovery, Environmental effects, Biological effects, Marine organisms, Spill cleanup, Amoco Cadiz spill

C. ENVIRONMENTAL IMPACTS OF OIL POLLUTION

Further studies by French biologists on the impacted area from the Amoco Cadiz spill indicate a faster recovery by marine organisms than noted in Cornwall following the Torrey Canyon disaster. The near exclusion of dispersants during cleanup operations may be a factor.

5. Baseline and Environmental Impact Studies

79B-0542
ASSESSMENT OF THE ECOLOGICAL EFFECTS OF AN OIL SPILL IN AN OFFSHORE SUBARCTIC ENVIRONMENT
Birchard, E.C., S.A.M. Conover, G. Greene, and A.S. Telford. 1978. Conference on Assessment of Ecological Impacts of Oil Spills, Keystone, Colorado, 14-17 June 1978. American Institute of Biological Sciences, 1978. p. 835-855.

Baseline studies, EIS, Drilling, Exploration, Environmental effects, Oil fields, Arctic, Subarctic regions, Canada

The waters of the eastern Canadian arctic and subarctic areas, including Baffin Bay, Davis Strait, and Labrador Sea, are potential sites of large oil and gas formations. A field study in the Davis Strait region since 1976 was established to assist in designing the technology of a drilling system and to assess the ecological implications of drilling in the area. Data collected in this study were used in the environmental impact statement.

79B-0543
CONTENT OF THE NOAA/BLM ALASKAN OCS RESEARCH EFFORT
Engelmann, R.J. 1977.
Oil and Aquatic Ecosystems, Tanker Safety, and Oil Pollution Liability. Proceedings of the Cordova Fisheries Institute held in Cordova, Alaska on April 1-3, 1977. B. Melteff (ed.). University of Alaska and Alaska Sea Grant Program, Report 77-8. p. 7-32. (NTIS Report PB-277 060)

OCS, Environmental management, NOAA, BLM, Government agencies, Models, Baseline studies, Alaska

The progress and status of the OCS environmental assessment program in Alaska is reviewed in this paper. A multidisciplinary approach to the analysis was attempted and numerous models are included.

C. ENVIRONMENTAL IMPACTS OF OIL POLLUTION

79B-0544
MARINE RESEARCH BY ADF&G IN KACHEMAK BAY
Flagg, L.B. 1977.
Oil and Aquatic Ecosystems, Tanker Safety, and Oil Pollution Liability. Proceedings of the Cordova Fisheries Institute held in Cordova, Alaska on April 1-3, 1977. B. Melteff (ed.). University of Alaska and Alaska Sea Grant Program, Report 77-8. p. 53-76. (NTIS Report PB-277 060)

Baseline studies, Environmental effects, Oil-gas leasing, Marine environment, Development, Alaska

In 1973, oil and gas tracts were leased in outer Kachemak Bay, a highly productive marine environment. In response to concern for the commercially harvested species in the area, the Alaska Legislature funded a comprehensive baseline study of the marine environment. The ten separate studies undertaken between 1975-1976 by the Department of Fish and Game are reviewed, and a summary of salient findings as they relate to potential impacts of oil and gas development is included.

79B-0545
A COMPREHENSIVE PLAN FOR THE GLOBAL INVESTIGATION OF POLLUTION IN THE MARINE ENVIRONMENT AND BASELINE STUDY GUIDELINES
Intergovernmental Oceanographic Commission. 1976.
UNESCO, 1976. 42 p. (Technical Series No. 14)

Guidelines, Baseline studies, Marine environment, Pollution control, Sampling, Analytical techniques, Marine organisms

"The GIPME Comprehensive Plan provides an international framework within which national and regional programmes on various aspects of marine pollution may be coordinated to contribute to an understanding of global pollution problems." Elements of the plan include devising and executing baseline studies, formulating mass balances by determining pollutant sources, inputs, and outflows, and establishing acceptable levels of pollutant exposure. Steps for implementation of the plan are outlined and baseline study guidelines are provided. The plan may be adapted to the study of many types of pollutants, including petroleum.

79B-0546
MISSISSIPPI OUTER CONTINENTAL SHELF IMPACT STUDY
Keyes, S.W., Jr., and S. Hill. 1976.
Gulfport, Mississippi, Gulf Regional Planning Commission, 1976. 136 p.

Onshore impacts, Socioeconomic effects, Environmental effects, OCS, Development, EIS, Mississippi, Gulf of Mexico

C. ENVIRONMENTAL IMPACTS OF OIL POLLUTION

This report evaluates the carrying capacity of the various social, economic, and environmental resources of Hancock, Harrison and Jackson Counties in light of potential onshore development of petroleum resources. The report is available from the Mississippi Marine Resources Council, PO Drawer 959, Long Beach, MS 39560. [possibly oil pollution related]

[from US Geological Survey Circular, No. 761:#D019. 1977]

79B-0547
THE PROTECTION AND DEVELOPMENT OF THE MARINE ENVIRONMENT AND COASTAL AREAS OF THE KUWAIT CONFERENCE REGION: THE PROGRAM OF THE UNITED NATIONS SYSTEM
Neuman, L.D. 1979.
1979 Oil Spill Conference (Prevention, Behavior, Control, Cleanup), Los Angeles, 19-22 March 1979. Washington, DC, American Petroleum Institute, 1979. p. 287-291. (API Publication No. 4308)

Environmental protection, Environmental management, Baseline studies, *UNEP, Development, Oil industry, Risk analysis, Persian Gulf, Kuwait

The Kuwait Action Plan, developed under UNEP coordination, is described. The objectives of the two-year plan include environmental assessment and management programs for the Kuwait Region. Also discussed are the physical setting of the Region, industrial development, including oil and gas activities, in the Region, and an oil spill risk analysis for the area.

79B-0548
NORTH CAROLINA PETROCOMPLEX STUDY: IMPACTS OF A PETROLEUM INDUSTRY DEVELOPMENT IN EASTERN NORTH CAROLINA
North Carolina Department of Administration. 1976.
Raleigh, North Carolina Department of Administration, Office of Marine Affairs, 1976. 239 p.

Socioeconomic effects, Environmental effects, Cost analysis, Refineries, Petrochemicals, Oil transport, Storage, Deepwater ports, North Carolina

"Includes a discussion of the environmental, social and economic costs and benefits of a complex including refineries, petrochemical plants, storage and transportation facilities, and an offshore deepwater terminal for the coastal plains of North Carolina."

[from US Geological Survey Circular, No. 761:#C013. 1977]

C. ENVIRONMENTAL IMPACTS OF OIL POLLUTION

79B-0549
IMPACT OF OUTER CONTINENTAL SHELF OIL AND GAS DEVELOPMENT: A SELECTED BIBLIOGRAPHY
Research and Planning Consultants. 1976.
Austin, Texas, Research and Planning Consultants, 1976. 30 p.

OCS, Offshore development, Environmental effects, Socioeconomic effects, Onshore impacts, Oil-gas leasing, Bibliographies, Texas

This annotated bibliography focuses on the OCS development of Texas. Included are studies on oil-gas development and its environmental, economic, demographic, social, and infrastructural impacts. Baseline studies related to the Texas Gulf coast are given. The report is available from Research and Planning Consultants, P.O. Box 13517, Austin, TX 78711.

[from US Geological Survey Circular, No. 761:#A013. 1977]

79B-0550
ECOLOGICAL STUDIES ON BENTHIC AND PLANKTONIC ASSEMBLAGES IN LOWER DELAWARE BAY
Watling, L., and D. Maurer (eds.). 1976.
Report NSF/RA-760335, NTIS Report PB 262 723. xviii + 633 p.

Baseline studies, Phytoplankton, Zooplankton, Benthos, Oil transfer, Ships, Delaware Bay

An extensive study was undertaken during the summers of 1972 and 1973 to obtain ecological baseline data on Delaware Bay. The survey results prompted a further investigation of the oil lightering areas in lower Delaware Bay during 1974-75. The results are documented in this report.

6. Legal and Regulatory Aspects

79B-0551
OIL SPILL LIABILITY AND COMPENSATION IN THE UNITED STATES
Cornett, D.E. 1977.
Oil and Aquatic Ecosystems, Tanker Safety, and Oil Pollution Liability. Proceedings of the Cordova Fisheries Institute, held in Cordova, Alaska on April 1-3, 1977. B. Melteff (ed.). University of Alaska and Alaska Sea Grant Program, Report 77-8. p. 203-206. (NTIS Report PB-277-060)

Liability, Legislation, Compensation, Oil spills, US government, Spill cleanup

C. ENVIRONMENTAL IMPACTS OF OIL POLLUTION

The author, presenting an industry viewpoint, supports the US proposed National Oil Spill Liability and Compensation Act, H.R. 3711. The proposed legislation provides a $200 million fund for compensation of costs of cleanup, third party damages, and resources injuries from oil spills not compensated by the spiller. Other provisions of the bill are briefly outlined.

79B-0552
THE COMPREHENSIVE OIL POLLUTION LIABILITY AND COMPENSATION ACT: AN UPDATE
Couper, F.E. 1978.
Conference on Assessment of Ecological Impacts of Oil Spills, Keystone, Colorado, 14-17 June 1978. American Institute of Biological Sciences, 1978. p. 37-57.

Legislation, Liability, Compensation, Oil spills, *Superfund

The various superfund bills awaiting Congressional decision reflect an executive and legislative effort to provide a legal framework which balances the interests of parties that transport and use oil with those whose property, livelihood, and natural resources are damaged by oil. A broad outline of the proposed bills' provisions for oil pollution liability and compensation is presented.

79B-0553
ADJUSTING AND HANDLING OIL SPILL POLLUTION CATASTROPHE CLAIMS
DeNoville, R.C. 1979.
1979 Oil Spill Conference (Prevention, Behavior, Control, Cleanup), Los Angeles, 19-22 March 1979. Washington, DC, American Petroleum Institute, 1979. p. 105-107. (API Publication No. 4308)

Oil spills, Compensation, Liability, Cost analysis, Economic effects

The differences between oil spill claims and regular claims are made clear in the title paper. In it are discussed types and approaches to claims, damage assessment, and the future of oil spill adjusting. Acceptable resolution to such claims rests on the adjuster's complete fairness and thorough consideration of all claims.

C. ENVIRONMENTAL IMPACTS OF OIL POLLUTION

79B-0554
ECONOMIC CONSIDERATIONS FOR OIL SPILL LIABILITY PROGRAMS
Dooley, D. 1977.
Oil and Aquatic Ecosystems, Tanker Safety, and Oil Pollution Liability. Proceedings of the Cordova Fisheries Institute, held in Cordova, Alaska on April 1-3, 1977. B. Melteff (ed.). University of Alaska and Alaska Sea Grant Program, Report 77-8. p. 229-234. (NTIS Report PB-277-060)

Economic effects, Oil spills, Liability, Compensation, Pollution control, Industries

For many reasons, compensation through civil litigation for vessel-source oil pollution is inadequate or non-existent. Economic considerations and the underlying theory for oil spill liability are described, including externalities, negative economic side effects of pollution control, and various incentives for adoption of pollution control standards which may provide either a positive or negative impetus for the development of more effective waste-treatment technology.

79B-0555
PROPOSALS FOR REFORM IN THE ASSESSMENT OF OIL SPILL DAMAGE
Fidell, E.R. and R.A. DuBey. 1978.
Conference on Assessment of Ecological Impacts of Oil Spills, Keystone, Colorado, 14-17 June 1978. American Institute of Biological Sciences, 1978. p. 83-118.

Oil spills, Compensation, Legislation, Environmental management, *Damage assessment

The authors discuss in a legal framework the scope of oil spill damage compensation with an emphasis on damage which could occur in the marine environment. Alternative legal mechanisms, including the proposed superfund legislation, are examined for their provisions to assess the extent and monetary value of the injury.

79B-0556
COLLECTING COMPENSATION FOR OIL POLLUTION DAMAGE TO FISHERIES RESOURCES IN ALASKA
Gissburg, J.G. 1977.
Oil and Aquatic Ecosystems, Tanker Safety, and Oil Pollution Liability. Proceedings of the Cordova Fisheries Institute, held in Cordova, Alaska on April 1-3, 1977. B. Melteff (ed.). University of Alaska and Alaska Sea Grant Program, Report 77-8. p. 217-227. (NTIS Report PB-277-060)

Liability, Legislation, Compensation, Fisheries, US government, Alaska

C. ENVIRONMENTAL IMPACTS OF OIL POLLUTION

The author uses a hypothetical example of a claim for compensating fishermen from oil pollution damage to illustrate the necessity of thorough documentation. Fishermen on Prince William Sound must prepare a systematic summary of fishing records, including accurate log books and photographic records, to be able to have the complete documentation that is necessary for a formal claim.

79B-0557
THE OIL SPILL FROM THE SUPERTANKER METULA AND ITS SIGNIFICANCE ON LEGISLATION, TRAINING, AND RESEARCH IN TEXAS
Hann, R.W. 1976.
Preservacion del Medio Ambiente Marino. Estudios Presentados al Seminario Internacional, Santiago, Chile, 25-27 September 1975. F.O. Vicuna (ed.). Santiago, Universidad de Chile, 1976. p. 200-210.

Metula spill, Legislation, Personnel training, Contingency planning, Texas

Summary not available.

[from Marine Pollution Research Titles 4(1):#71. 1977]

79B-0558
REVIEW OF FEDERAL LEGISLATION
Heller, B. 1977.
Oil and Aquatic Ecosystems, Tanker Safety, and Oil Pollution Liability. Proceedings of the Cordova Fisheries Institute, held in Cordova, Alaska on April 1-3, 1977. B. Melteff (ed.). University of Alaska and Alaska Sea Grant Program, Report 77-8. p. 235-239. (NTIS Report PB-277-060)

Legislation, Liability, US government, International agreements, Insurance, Regulations

The history of federal oil pollution liability legislation is reviewed, including the 1851 Limitation of Liability Act, the Water Quality Improvement Act, the OCS Act, the TAPS Act, and the Deepwater Ports Act. International agreements are the Tanker Owners Voluntary Agreement concerning Liability for Oil Pollution (TOVALOP), the Civil Liabilities Convention, CRISTAL, and the International Fund Convention. Insurance schemes are mentioned and reasons for comprehensive oil spill liability legislation are discussed.

C. ENVIRONMENTAL IMPACTS OF OIL POLLUTION

79B-0559
LIABILITY AS IT RELATES TO MARINE POLLUTION
Mueller, E.W. 1977.
Oil and Aquatic Ecosystems, Tanker Safety, and Oil Pollution Liability. Proceedings of the Cordova Fisheries Institute, held in Cordova, Alaska on April 1-3, 1977. B. Melteff (ed.). University of Alaska and Alaska Sea Grant Program, Report 77-8. p. 207-216. (NTIS Report PB-277-060)

Liability, Legislation, US government, State governments, Marine environment, Alaska

Various state and federal legislative measures on marine pollution, both existing and proposed, are reviewed. Liability for potential oil pollution damage in Alaska is specifically addressed. The author outlines several changes in liability limitations and legislation that were made by the Alaska legislature.

7. General Aspects

79B-0560
THE ECOLOGICAL IMPACT OF BUNKER C OIL ON FISH AND WILDLIFE IN ST. LAWRENCE RIVER MARSHES: A PRELIMINARY REPORT
Alexander, M.M., P. Longabucco, and D. Phillips. 1978.
Conference on Assessment of Ecological Impacts of Oil Spills, Keystone, Colorado, 14-17 June 1978. American Institute of Biological Sciences, 1978. p. 251-267.

Environmental effects, Fish, Wildlife, Marshes, Bays, Spill cleanup, Ships, St. Lawrence River, *Nepco 140 spill

In spite of an effective cleanup, losses of fish and wildlife were great in marshes and bays of the St. Lawrence River as a result of the Bunker C oil spill from the Nepco-140 barge. A two-year study was established for the 1977 and 1978 seasons to investigate fish and wildlife changes and the presence, movement, or accumulation of petroleum hydrocarbons. This report reviews the basic characteristics of the spill, the environment, the initial impact on fish and wildlife, and the cleanup.

C. ENVIRONMENTAL IMPACTS OF OIL POLLUTION

79B-0561
CONFERENCE ON ASSESSMENT OF ECOLOGICAL IMPACTS OF OIL SPILLS
American Institute of Biological Sciences. 1978.
Proceedings of the Conference held in Keystone, Colorado, 14-17 June 1978. Washington, DC, AIBS, 1978. 936 p.

Oil spills, Biological effects, Ecosystems, Tankers, Marine organisms, Wildlife, Argo Merchant spill, Ekofisk blowout, Ships, Socioeconomic effects, Microorganisms, Toxicity, Legislation, *Proceedings

Forty-two papers were presented at the title conference under the following headings: The Socio-Economic-Legal Aspects of Oil Spills; The Impact of the Argo Merchant Spill (12/15/76); The Impact of the Nepco #140 Barge Spill in the St. Lawrence River (6/23/76); Highlights Regarding the Impacts of other Pertinent Oil Spills (Session I and Session II); Impact of the Ekofisk Bravo Blowout (4/22/77) in the North Sea; Effects of Spills on Wildlife; Effects of Spills on Water Column Organisms; Effects of Spills on Benthic Organisms; and Effects of Spills in Extreme Climatic Zones. Individual papers are abstracted separately in this issue of OPA.

79B-0562
CONSEQUENCES OF OIL POLLUTION IN THE ESTUARINE ENVIRONMENT OF THE GULF OF MEXICO
Brown, L.R. 1977.
Estuarine Pollution Control and Assessment: Proceedings of a Conference [Pensacola, Florida, 11-13 February 1975]. US Environmental Protection Agency, Office of Water Planning and Standards, 1977. Vol. 2:401-414. (Report EPA-440-1-77-007)

Environmental effects, Estuaries, Chronic effects, Ecosystems, Health hazards, Gulf of Mexico

In the last decade there has been a significant shift in the concern about effects of oil pollution, and "attention has now been largely redirected toward low-level chronic effects, especially those posing a human health hazard. Other areas of increasing concern are the potential synergistic action of oil in conjunction with other pollutants and the long-term chronic effects of oil on the ecosystem. Data available in the literature have served to identify the potential problems, but definition and resolution must await additional data. More emphasis must be placed on translating scientific data into information utilizable for making estuarine management decisions."

C. ENVIRONMENTAL IMPACTS OF OIL POLLUTION

79B-0563
ON THE OIL POLLUTION PROBLEM IN THE BALTIC
Carlberg, S.R. 1976.
Second Soviet-Swedish Symposium on the Pollution of Baltic. A. Akerblom (ed.). Royal Swedish Academy of Sciences/Universitetsforlaget, 1976. p. 27-36. (Ambio Special Report No. 4)

Source identification, Biological effects, Phytoplankton, Fish, Analytical techniques, Concentrations, Baltic Sea, Sweden, Finland, USSR, *Tagging

The first half of this paper summarizes several studies on marine pollution including a Swedish method of spill tagging based on addition of microparticles of several alloys, Finnish studies on oil spills in the Baltic, and biological investigations on the effect of oil on phytoplankton, seaweed, fry fish, eggs and adult fishes. The second half of the paper describes a current study of the content of mineral oil in the Baltic. Results are compared with findings of recent Soviet studies.

79B-0564
INTERACTIONS OF POLLUTANTS WITH THE USES OF ESTUARIES
Cronin, L.E. 1977.
Estuarine Pollution Control and Assessment: Proceedings of a Conference [Pensacola, Florida, 11-13 February 1975]. US Environmental Protection Agency, Office of Water Planning and Standards, 1977. Vol. 2:739-756. (Report EPA-440-1-77-007)

Petroleum products, Estuaries, Coastal waters, Environmental effects

"In this overview, the uses and pollutants are identified, the trend for each is noted, the principal deleterious effects of pollutants in coastal waters are summarized, and visual summaries are presented to suggest which of the uses may be affected by each class of pollutant." Pollution by oil and petroleum products is included.

79B-0565
REVIEW ON THE STATE OF MARINE POLLUTION IN THE MEDITERRANEAN SEA
General Fisheries Council for the Mediterranean. 1976.
Rome, FAO, 1976. 56 p. (Appendix to GFCM/XI/72/12)

Sources, Environmental effects, Marine environment, Mediterranean Sea

Summary not available. [possibly oil pollution related]

[from Marine Pollution Research Titles 4(3):#417. 1977]

C. ENVIRONMENTAL IMPACTS OF OIL POLLUTION

79B-0566
THE DRUPA OIL SPILL INVESTIGATION CONCERNING OIL, WATER AND FISH
Grahl-Nielsen, O., T. Neppelberg, K.H. Palmork, K. Westrheim, and S. Wilhelmsen. 1976.
ICES C. M. Pap. Rep., No. E:32. 18 p.

Tankers, Environmental effects, Fish, Biological effects, Fate, *Drupa spill

Summary not available.

[from Marine Pollution Research Titles 4(6):#1047. 1977]

79B-0567
THE METULA OIL SPILL
Gunnerson, C.G. 1976.
Preservacion del Medio Ambiente Marino. Estudios Presentados al Seminario Internacional, Santiago, Chile, 25-27 September 1975. F.O. Vicuna (ed.). Santiago, Universidad de Chile, 1976. p. 212-221.

Oil spills, Environmental effects, Metula spill, Tankers, Beaches, Marshes, Strait of Magellan, Chile

Short-term and long-range environmental damage caused by the 1974 Metula supertanker grounding in the Strait of Magellan is described. Over 50,000 tons of crude oil were spilled into the Strait and onto beaches and tidal marshes of Tierra del Fuego. The background of the accident, a description of the environment, reasons why cleanup was not attempted, and a discussion of research needs are presented.

79B-0568
FOLLOW-UP FIELD SURVEY OF THE OIL POLLUTION FROM THE TANKER METULA
Hann, R.W. 1976.
The Metula Oil Spill. C.G. Gunnerson, and G. Peter. 1976. Boulder, Colorado, National Oceanic and Atmospheric Administration, Environmental Research Laboratories, 1976. 60 p. NOAA Special Report. (Appendix B, attached microfiche)

Oil spills, Environmental effects, Recovery, Onshore impacts, Biological effects, Intertidal zone, Spill cleanup, Metula spill, Strait of Magellan, Chile

The title report provides a history of the spill, the extent of oil deposition on the shore, the environmental impact, and comments relative to containment feasibility, cleanup, and environmental stabilization. Nearly all of the 20,000 tons are still continuing to have "substantial biological impacts on intertidal marine life." Evidence was abundant of previous major sources of oil pollution in the Strait.

C. ENVIRONMENTAL IMPACTS OF OIL POLLUTION

79B-0569
SEVEN WAYS TO OBLITERATION: FACTORS OF ESTUARINE DEGRADATION
Hedgpeth, J.W. 1977.
Estuarine Pollution Control and Assessment: Proceedings of a Conference [Pensacola, Florida, 11-13 February 1975]. US Environmental Protection Agency, Office of Water Planning and Standards, 1977. Vol. 2:723-738. (Report EPA-440-1-77-007)

Estuaries, Environmental deterioration, Cost analysis, Oil spills, Contaminants, Coastal zone management, Economic effects

"The most significant factor contributing to the degradation of our estuaries is our failure to treat an estuary as a natural system, rather than as a convenience serving man's many and conflicting purposes. This attitude is exacerbated by lack of competence on the part of consultants called upon to predict the results of interfering with natural processes they do not understand in the first place. When this is combined with notions of cost-benefit analysis and trade-offs that justify to ourselves the addition of deleterious substances and chemicals, alteration of temperature and sediment regimes, and spillage of oil, the synergistic action may accelerate the demise of an estuary."

79B-0570
EFFECTS OF AN OIL SPILL ON SALT MARSHES AT HARBOR ISLAND, TEXAS. I. BIOLOGY
Holt, S., S. Rabalais, N. Rabalais, S. Cornelius, and J.S. Holland. 1978 Conference on Assessment of Ecological Impacts of Oil Spills, Keystone, Colorado, 14-17 June 1978. American Institute of Biological Sciences, 1978. p. 344-352.

Pipelines, Oil spills, Marshes, Biological effects, Benthos, Plants, Monitoring, Spill cleanup, Texas

On 13 October 1976, an American Petrofina Company pipeline ruptured and spilled about 377 bbls of crude oil into the cordgrass (*Spartina alterniflora*) and black mangrove (*Avicennia germinans*) marshes in the title area. A biological and chemical survey began the day after the spill. A single study site, with 4 stations, was selected to monitor the benthos. Various types of cleanup approaches were used, including no cleanup of some areas, and different concentrations of oil coverage in the study area were monitored.

C. ENVIRONMENTAL IMPACTS OF OIL POLLUTION

79B-0571
ASSEMBLING OIL IMPACTS WITH LABORATORY DATA - APPLICATIONS, LIMITATIONS, AND NEEDS
Karinen, J.F. 1977.
Oil and Aquatic Ecosystems, Tanker Safety, and Oil Pollution Liability. Proceedings of the Cordova Fisheries Institute, held in Cordova, Alaska on April 1-3, 1977. B. Melteff (ed.). University of Alaska and Alaska Sea Grant Program, Report 77-8. p. 99-110. (NTIS Report PB-277-060)

Toxicity, Sublethal effects, Analytical techniques, Sampling, *Laboratory data analysis, *Field applications

Problems associated with using laboratory data to assess the impact of oil are outlined. Considerations when trying to apply toxicity and sub-letal effects data are also presented. Recommendations for applying laboratory data to the field are given.

79B-0572
POLLUTION OF THE BALTIC BY CRUDE OIL PRODUCTS [in Polish]
Rakowska, E., and E. Lysiak. 1976.
Prace Morskiego Instytutu Rybackiego Gdiny 18(A):49-62.

Crude oil, Petroleum products, Contamination, Baltic Sea

Summary not available.

[from Marine Pollution Research Titles 5(1):#60. 1978]

79B-0573
A SUMMARY OF OIL SPILL STUDIES DONE AT WOODS HOLE OCEANOGRAPHIC INSTITUTION
Teal, J.M. 1977.
Oil and Aquatic Ecosystems, Tanker Safety, and Oil Pollution Liability. Proceedings of the Cordova Fisheries Institute, held in Cordova, Alaska on April 1-3, 1977. B.Melteff (ed.). University of Alaska and Alaska Sea Grant Program, Report 77-8. p. 115-120. (NTIS Report PB-277-060)

Fuel oil, Fate, Sediments, Ice, Florida spill, Buzzards Bay

After the barge Florida ran aground in 1969 in Buzzards Bay, Massachusetts, spilling No. 2 fuel oil, the author and several colleagues extensively studied the effects. The oil mixed into the sediments and had a long-lasting effect, with high concentrations still remaining.

C. ENVIRONMENTAL IMPACTS OF OIL POLLUTION

79B-0574
ESTUARINE POLLUTION CONTROL AND ASSESSMENT: PROCEEDINGS OF A CONFERENCE
US Environmental Protection Agency. 1977.
US Environmental Protection Agency, Office of Water Planning and Standards, 1977. Volume 1:xxxvii + p. 1-381; Volume 2:iv + p. 385-756. (Report EPA-440-1-77-007)

Estuaries, Coastal waters, Pollution control, Environmental effects, Costal zone management, US, *Proceedings

Contained in these two volumes are 57 papers presented at the title conference in Pensacola, Florida, 11-13 February 1975. In Volume 1, papers by F.J. Vernberg, L.J. Blus et al., D.W. Hood et al., and R.B. Biggs consider environmental aspects of oil. In Volume 2, papers by J.W. Farrington, L.R. Brown, K.G. Hay, E. Langlois, J.W. Hedgpeth, and L.E. Cronin deal partly or entirely with oil pollution problems. These papers are summarized separately in this issue of OPA.

79B-0575
CHARACTERIZATION OF THE NATURAL ESTUARY IN TERMS OF ENERGY FLOW AND POLLUTION IMPACT
Vernberg, F.J. 1977.
Estuarine Pollution Control and Assessment: Proceedings of a Conference [Pensacola, Florida, 11-13 February 1975]. US Environmental Protection Agency, Office of Water Planning and Standards, 1977. Vol. 1:29-39. (Report EPA-440-1-77-007)

Environmental effects, Sublethal effects, Chronic effects, Estuaries, Marshes, Ecosystems, Petroleum products, Physical effects

A brief description of oil pollution is included in this study of the estuarine-marshland ecosystem and its energy flow and pollution impact. The physiological effects of sublethal concentrations of oil derivatives are poorly known, but recent studies suggest that energy flow patterns of estuarine communities are differentially disturbed by oil spills as contrasted to chronic low-level leaks.

79B-0576
A PLAN FOR SCIENTIFIC RESPONSE TO AN OIL SPILL IN THE BEAUFORT SEA
Wright, D.G. 1979.
1979 Oil Spill Conference (Prevention, Behavior, Control, Cleanup), Los Angeles, 19-22 March 1979. Washington, DC, American Petroleum Institute, 1979. p. 525-532. (API Publication No. 4308)

Oil spills, Spill response, Contingency planning, Environmental effects, Fate, Movement, Biological effects, Toxicity, Plankton, Marine mammals, Fish, Birds, Beaufort Sea, *Scientific response

C. ENVIRONMENTAL IMPACTS OF OIL POLLUTION

A Scientific Response Plan has been devised by the Canadian Department of Fisheries and Environment. The plan consists of 28 studies on the fate and effects of spilled oil that could be conducted in the event of a major spill in the Beaufort Sea. The types of studies specified by the plan include monitoring the movement of oil, factors affecting oil movement, deposition and decomposition of oil, toxicity of spilled oil, and effects on various marine organisms including plankton, fish, birds, seals, polar bears, and whales.

D. FATE OF OIL IN THE ENVIRONMENT

1. Biodegradation

79B-0577
MICROBIOLOGY: DEGRADATION POTENTIAL
Bhattacharya, L., and R. Traxler. 1978.
Assessment of Treated vs. Untreated Spills (Interim Report). M.P. Wilson. University of Rhode Island Report HCP/W4047-02, Contract No. E (11-1) 4047. 38 p.

Biodegradation, Crude oil, Dispersants, Microorganisms, Hydrocarbons, Predictions, Models

This paper outlines the materials and procedures that are being used in a University of Rhode Island project to investigate microbial degradation of oil, oil plus dispersants, and dispersants alone. Laboratory meso-scale, and *in situ* or *in vivo* experiments are being conducted in order to generate a mass of data which will allow the formulation of a hydrocarbon degradation potential index which can be used in predictive models.

79B-0578
THE MICROBIAL METABOLISM OF CYCLOHEXANE AND RELATED COMPOUNDS
Donoghue, N.A., M. Griffin, D.B. Norris, and P.W. Trudgill. 1976.
Proceedings of the Third International Biodegradation Symposium. J.M. Sharpley and A.M. Kaplan (eds.). London, Applied Science Publishers Ltd., 1976. p. 43-56.

Biodegradation, Bacteria, Microorganisms, Hydrocarbons, Metabolism, Growth, Oxidation, *Cyclohexanol

Growth of microorganisms with cyclohexane as sole carbon source has not been reliably demonstrated, although cyclohexane utilization in co-metabolic and commensal situations has been established, with cyclohexanol and cylcohexanone as intermediates. In this study, strains of *Nocardia* and *Acinetobacter* were found capable of growth with cyclohexanol as sole carbon source, but their ability to utilize other alicyclic compounds is restricted to those closely related to cyclohexanol. A scheme for the oxidation of cyclohexanol to adipate by these organisms is proposed.

D. FATE OF OIL IN THE ENVIRONMENT

79B-0579
USE OF GENETICALLY ENGINEERED MULTI-PLASMID MICROORGANISMS FOR RAPID DEGRADATION OF FUEL HYDROCARBONS
Friello, D.A., J.R. Mylroie, and A.M. Chakrabarty. 1976. Proceedings of the Third International Biodegradation Symposium. J.M. Sharpley and A.M. Kaplan (eds.). London, Applied Science Publishers Ltd., 1976. p. 205-214.

Biodegradation, Bacteria, Microorganisms, Hydrocarbons, Crude oil, Spill cleanup, *Plasmid transfer, *Genetic engineering, *Pseudomonas

Transfer of plasmids bearing genes specifying the enzymes involved in hydrocarbon degradation from several strains of Pseudomonas to a single culture produced a multi-plasmid strain capable of oxidizing several hydrocarbon substrates simultaneously in the presence of suitable inducers. The multi-plasmid strain grew faster in crude oil than any of the parent strains and may, therefore, be useful in the cleanup of oil spills.

79B-0580
DEGRADATION OF N-PARAFFIN MIXTURE BY MARINE MICROORGANISMS IN ENRICHED SEAWATER MEDIUM [English summary]
Murakami, A., T. Matsuda, N. Watanabe, and S. Nagasawa. 1976. Journal of the Oceanographical Society of Japan 32(5):242-248.

Biodegradation, Bacteria, Microorganisms, *n-Paraffins

The ability of two bacterial strains, Caulobacter sp. and Flavobacterium sp., to degrade n-paraffin mixtures in enriched seawater medium was studied. Rates of degradation ranged from 3.3×10^{-12} to 3.4×10^{-11} mg oil/cell/hr at 20° C. An equation describing the maximum degradation rate is given.

79B-0581
MODELLING OF THE BREAKDOWN AND THE MOBILIZATION OF HYDROCARBONS IN UNSATURATED SOIL LAYERS
Verstraete, W., R. Vanloocke, R. De Borger, and A. Verlinde. 1976. Proceedings of the Third International Biodegradation Symposium. J.M. Sharpley and A.M. Kaplan (eds.). London, Applied Science Publishers Ltd., 1976. p. 99-112.

Biodegradation, Hydrocarbons, Soil, Models, Respiration, Emulsions, Groundwater, Chemical analysis

Biodegradation of several gasoils in the surface soil layer was investigated using direct chemical analyses and respirometric methods. "The results indicate that in the acidic podzol studied, the pH and

C/N/P ratio are the most prominent factors responsible for the persistence of gasoil.... The biodegradation phenomena of gasoil in non-adapted soil can be simulated mathematically by asymmetric sigmoidal kinetics. The biodegradation in acclimatized soil can conveniently be fit to zero order kinetics." Experiments on hydrocarbon breakdown in lysimeter columns indicated that biodegradation was enhanced when the columns were irrigated with nitrogen- and phosphorus-enriched water, and the entrapped hydrocarbons became mobilized and leached out of the soil matrix.

79B-0582
THE MICROBIAL UTILIZATION OF BUTADIENE
Watkinson, R.J., and H.J. Somerville. 1976.
Proceedings of the Third International Biodegradation Symposium. J.M. Sharpley and A.M. Kaplan (eds.). London, Applied Science Publishers Ltd., 1976. p. 35-42.

Biodegradation, Microorganisms, Bacteria, Hydrocarbons, Metabolism, Growth, *Butadiene

A Nocardia sp. was isolated by its ability to utilize butadiene as sole carbon and energy source and an attempt was made to identify the degradative pathway. The catabolism of butadiene is believed to involve the monoepoxide, a β,γ-unsaturated α-ketoacid, acrylate, lactate, and pyruvate.

2. Physical and Chemical Processes

79B-0583
THE FATE AND WEATHERING OF SURFACE OIL FROM THE BRAVO BLOWOUT
Audunson, T. 1978.
Conference on Assessment of Ecological Impacts of Oil Spills, Keystone, Colorado, 14-17 June 1978. American Institute of Biological Sciences, 1978. p. 446-475.

Drift, Spreading, Weathering, Statistical analysis, Fate, Sea surface, Ekofisk blowout, North Sea

This paper describes the drift, spreading, dissipation, and weathering of oil on the water surface after the Ekofisk Bravo blowout on 22 April 1977 in the North Sea. Simulations of the drift, spread, and dissipation of the oil were compared to the field data, results of which show fair agreement with field observations. Drift card releases and statistical computations are presented which illustrate the fortunate timing of the spill with respect to coastal pollution.

D. FATE OF OIL IN THE ENVIRONMENT

79B-0584
CHEMICAL INVESTIGATIONS OF TWO EXPERIMENTAL OIL SPILLS IN AN ESTUARINE ECOSYSTEM, PART II
Bieri, R.H., V.C. Stamoudis, and M.K. Cuemen. 1979.
1979 Oil Spill Conference (Prevention, Behavior, Control, Cleanup), Los Angeles, 19-22 March 1979. Washington, DC, American Petroleum Institute, 1979. p. 693-697. (API Publication No. 4308)

Oil spills, Movement, Hydrocarbons, Estuaries, Ecosystems, Microorganisms, Chemical analysis, GC/MS

This paper "deals with hydrocarbons in unconsolidated sediments and oysters, Crassostrea virginica, exposed to experimental oil spills. Quantitative data are based on high resolution, wall-coated glass capillaries, and compound identification on mass spectrometry and retention. Prevailing physical conditions at the time of the spill are of major importance."

79B-0585
OIL SPILL BEHAVIOR IN ICE DURING THE 1977 BUZZARDS BAY OIL SPILL
Deslauriers, P.C. 1978.
Conference on Assessment of Ecological Impacts of Oil Spills, Keystone, Colorado, 14-17 June 1978. American Institute of Biological Sciences, 1978. p. 197-215.

Fuel oil, Ice, Movement, Oil spills, Models, Bouchard 65 spill, Buzzards Bay

On 28 January 1977, the barge Bouchard #65 grounded and accidentally discharged 307,200 L (81,150 gal) of No. 2 home heating oil into Buzzards Bay which was 90% ice-covered. Field measurements and observations were made between 29 January and 25 February. This paper documents the findings and discusses the present state-of-the-art knowledge of oil spill behavior and movement in ice-infested waters.

79B-0586
OCCURRENCE OF OIL IN OFFSHORE BOTTOM SEDIMENTS AT THE AMOCO CADIZ OIL SPILL SITE
D'Ozouville, L., M.O. Hayes, E.R. Gundlach, W.J. Sexton, and J. Michel. 1979.
1979 Oil Spill Conference (Prevention, Behavior, Control, Cleanup), Los Angeles, 19-22 March 1979. Washington, DC, American Petroleum Institute, 1979. p. 187-192. (API Publication No. 4308)

Sediments, Amoco Cadiz spill, Bays, Distribution, Concentrations, Behavior, Fate, France

D. FATE OF OIL IN THE ENVIRONMENT

A diving survey was conducted in August 1978 to ascertain the horizontal and vertical distribution of oil incorporated into bottom sediments. The survey yielded 80 cores taken at 20 stations in the bays of Morlaix and Lannion, situated near the Amoco Cadiz spill site. Generally higher oil concentrations were found in muddy sediments, porous sediments containing Lithothamnium, and in sediment areas offshore of heavily oiled beaches. Generally, depth of oil penetration was less than 7 cm.

79B-0587
ROLE OF DYNAMIC COASTAL PROCESSES IN THE IMPACT AND DISPERSAL OF THE AMOCO CADIZ OIL SPILL (MARCH 1978) BRITTANY, FRANCE
Hayes, M.O., E.R. Gundlach, and L. D'Ozouville. 1979.
1979 Oil Spill Conference (Prevention, Behavior, Control, Cleanup), Los Angeles, 19-22 March 1979. Washington, DC, American Petroleum Institute, 1979. p. 193-198. (API Publication No. 4308).

Fate, Behavior, Estuaries, Shorelines, Coasts, Beaches, Sediments, Physical effects, Amoco Cadiz spill, France, *Coastal processes, *Vulnerability index

This paper describes the influence of beach processes and sedimentation on the dispersal, grounding, burial and long-term fate of the oil spilled by the Amoco Cadiz along the Brittany shoreline in March-April 1978. Observations based on field studies conducted directly after the spill and again a month later indicate that coastal processes and geomorphology played a major role in the dispersal and accumulation of the oil, once it came ashore. The observations have also served to confirm the usefulness of the oil spill vulnerability index for predicting the damage inflicted by a spill upon different types of shoreline. As observed along the Brittany coast, exposed rocky headlands were the least impacted, while sheltered rocky coasts, tidal flats and salt marshes received the most lasting damage.

79B-0588
DROP SIZE DISTRIBUTIONS AND MIXING ENERGY
Kim, T., M. Cherian, and W. Jasper. 1978.
Assessment of Treated vs. Untreated Oil Spills (Interim Report), M.P. Wilson. University of Rhode Island Report HCP/W4047-02, Contract No. E (11-1) 4047. 46 p.

Dispersants, Physical effects, Behavior, Emulsions

Experiments were conducted, and are discussed in this paper, in which the effects of chemical dispersants on oil drop size formation and distribution were investigated. The experiments measured the drop size distribution in a dispersant treated oil-water system, the stability of oil-water emulsions, and interfacial tension.

D. FATE OF OIL IN THE ENVIRONMENT

79B-0589
PRELIMINARY RESULTS OF AN EXPERIMENT TO MEASURE RAIN INDUCED OIL ENTRAINMENT
Konigsberg, D., and P. Cornillon. 1978.
Assessment of Treated vs. Untreated Oil Spills (Interim Report). M.P. Wilson. University of Rhode Island Report HCP/W4047-02, Contract No. E (11-1) 4047. 29 p.

Oil slicks, Dispersion, Behavior, *Rainfall, *Entrainment

"A literature review was performed and preliminary experiments were conducted to quantify the dispersion of oil resulting from rainfall. These tests, as well as the literature, strongly suggest that rain is a significant entrainment process when it occurs over a free surface covered by a thin film."

79B-0590
BEHAVIOR AND EFFECTIVENESS OF DISPERSANTS AT SEA AND AT SHORELINES
Mackay, D., A. Watson, C. Ng, and S. Nadeau. 1979.
1979 Oil Spill Conference (Prevention, Behavior, Control, Cleanup), Los Angeles, 19-22 March 1979. Washington, DC, American Petroleum Institute, 1979. p. 447-452. (API Publication No. 4308)

Dispersants, Crude oil, Fuel oil, Behavior, Shorelines, Beaches, Sediments

Laboratory tests were conducted to investigate quantitatively the factors influencing the effectiveness of dispersants applied to oil at sea, or applied to oil approaching the shoreline. In general, the turbulence level was found to profoundly influence the effectiveness of a dispersant. Simulated shoreline tests indicated that oil behavior can be substantially modified by dispersant use to reduce adhesion and stranding, to prevent sinking of large oil droplets by accumulation of sand, and to cause greater penetration into beaches by a filtering action.

79B-0591
WEATHERING ESTIMATIONS FOR SPILLED OIL FROM BOUCHARD No. 65
MacLeod, W.D., Jr., M.Y. Uyeda, A.J. Friedman, and P.G. Prohaska. 1978.
Conference on Assessment of Ecological Impacts of Oil Spills, Keystone, Colorado, 14-17 June 1978. American Institute of Biological Sciences, 1978. p. 217-228.

Chemical analysis, Chromatography, Hydrocarbons, Fuel oil, Weathering, Evaporation, Sampling, Ice, Ships, Bouchard 65 spill, Buzzards Bay

Eleven ice and snow samples collected in the vicinity of the No. 2 fuel oil spill from the title barge were analyzed for saturated and aromatic hydrocarbons by high resolution GC. The analysis indicated that the

D. FATE OF OIL IN THE ENVIRONMENT

Bouchard #65 contained a lower concentration of aromatic hydrocarbons than that of the No. 2 fuel oil spilled from the barge Florida in 1969. The percent loss estimates generally correlated with exposure of the oil to conditions that could increase evaporative weathering.

79B-0592
FATE OF POLLUTANTS IN THE AIR AND WATER ENVIRONMENTS. PART 2. CHEMICAL AND BIOLOGICAL FATE OF POLLUTANTS IN THE ENVIRONMENT
Suffet, I. H. (ed.). 1977.
New York, John Wiley & Sons, 1977. xx + 442 p. (Advances in Environmental Science and Technology, Volume 8)

Fate, Aquatic environment, Biodegradation, Physical effects, Chemical effects

A collection of papers is presented on the chemical and biological processes to which air and water pollutants are subjected. Although the papers do not deal specifically with the fate of petroleum pollutants, oil and PAH's are mentioned throughout the book.

79B-0593
COMPOSITIONAL CHANGES IN BEACH SEDIMENT-BOUND ARROW BUNKER C: 1970-1976
Vandermeulen, J.H., P.D. Keizer, and T.P. Ahern. 1976.
ICES C. M. Pap. Rep. No. E:51. 12 p.

Chemical analysis, Fate, Beaches, Sediments, Hydrocarbons, *Arrow spill

Summary not available.

[from Marine Pollution Research Titles 4(6):#1063. 1977]

3. Models, Simulations, and Predictions

79B-0594
LABORATORY STUDIES OF THE INFLUENCE OF THE VELOCITY OF THE WIND ON THE MOVEMENT OF OIL SLICKS
Allen, J., and J.C.M. Thanarajah. 1977.
Journal of Hydraulic Research 15(4):297-310.

Models, Movement, Drift, Spreading, Predictions, Sea surface, Spill trajectories, Physical effects

Experiments used an open channel inside a wind tunnel such that water could be pumped with or against wind direction. Investigations included behavior of wave motion in the liquid and an attempt to relate the significant height of surface waves to the effective roughness for the velocity distribution in the air. The results were "surprisingly consistent."

79B-0595
LABORATORY STUDY OF BEHAVIOUR OF OIL AND GAS PARTICLES IN SALT WATER RELATING TO DEEP OIL WELL BLOWOUTS
Bishnoi, P.R., and B.B. Maini. 1979.
Spill Technology Newsletter 4(1):24-36.

Models, Blowouts, Behavior, Fate, Offshore development

As part of a study of the behavior of oil and gas streaming from deep offshore oil well blowouts, a high pressure water tunnel was designed and fabricated for simulating seabed conditions. Experiments described in this study were carried out under simulated seabed pressures of up to 2000 psi; the formation of gas hydrates under constant and decreasing pressures is detailed. [possibly oil pollution related]

79B-0596
WEST COAST OIL SPILLS - A PROBABILITY ANALYSIS KEYED TO SOUTHERN CALIFORNIA
Bright, D. 1979.
1979 Oil Spill Conference (Prevention, Behavior, Control, Cleanup), Los Angeles, 19-22 March 1979. Washington, DC, American Petroleum Institute, 1979. p. 45-51. (API Publication No. 4308)

Models, Oil spills, Ships, Tankers, Oil transport, Predictions, California, Coastal waters, Pacific coast

This analysis identifies distinctly different ship traffic patterns in northern and southern California, with a decreasing frequency of spills related to traffic volumes in the south. The potential for numerous tanker collisions and spills along the West Coast is extremely low; a 60,000 barrel spill in coastal waters might occur once in 500 years.

D. FATE OF OIL IN THE ENVIRONMENT

79B-0597
AN OIL SPILL FATES MODEL
Cornillon, P., and M. Spaulding. 1978.
Assessment of Treated vs. Untreated Oil Spills (Interim Report). M.P. Wilson. University of Rhode Island Report HCP/W4047/02, Contract No. E (11-1)4047. 51 p.

Models, Fate, Oil spills, Behavior, Spill response, Spill cleanup, Dispersants, Risk analysis, Source identification, Environmental effects

The University of Rhode Island Oil Spill Fates Model is being developed to help perform an environmental assessment of the treatment of spilled oil with dispersants. The model is designed to incorporate most known naturally occurring biological, physical and chemical processes, as well as the effects of cleanup, removal or dispersion actions. It is currently being tested and refined so that it will be useful in planning spill response and cleanup, in source identification of unknown spills, and in risk analysis and damage assessment studies.

79B-0598
OIL SPILL TREATMENT STRATEGY MODELING FOR GEORGES BANK
Cornillon, P.C., M.L. Spaulding, and K. Hansen. 1979.
1979 Oil Spill Conference (Prevention, Behavior, Control, Cleanup), Los Angeles, 19-22 March 1979. Washington, DC, American Petroleum Institute, 1979. p. 685-692. (API Publication No. 4308)

Models, Spill response, Movement, Spill trajectories, Predictions, Fisheries, Georges Bank

The title model tracks both surface and subsurface oil and is similar to others except that the subsurface technique uses a "modified particle-in-cell method which diffuses and advects individual oil/dispersant droplets representative of a large number of droplets." Resultant oil concentration data can be used for a fisheries population model and also allows for chemical/mechanical cleanup.

79B-0599
THE HYDRODYNAMICS OF THE SPREADING OF ONE LIQUID ON THE SURFACE OF ANOTHER
DiPietro, N.D., C.Huh, and R.G. Cox. 1977.
Journal of Fluid Mechanics 84(3):529-549.

Movement, Drift, Spreading, Spill trajectories, Sea surface

Mechanisms involved in the spreading of one liquid on the surface of another are investigated. For the case of a positive spreading coefficient, the general equations determining the spreading are derived.

These are solved for the situation where the spreading liquid is introduced onto the surface of a uniformly flowing substratum at a position upstream of a barrier on the substratum surface, thereby achieving a steady-state situation. [possibly oil pollution related]

79B-0600
A MODEL TO FORECAST THE MOTION OF OIL ON THE SEA
Hess, K.W. and C.L. Kerr. 1979.
1979 Oil Spill Conference (Prevention, Behavior, Control, Cleanup), Los Angeles, 19-22 March 1979. Washington, DC, American Petroleum Institute, 1979. p. 653-663. (API Publication No. 4308)

Models, Oil spills, Movement, Spill trajectories, Predictions, Spreading, Drift, Argo Merchant spill

This model was developed by combining separate models for the motion of oil, water, and air. Required data includes information on the upper and lower boundaries of oil which is derived from the individual models. Further refinement incorporating more sophisticated dynamics will be developed as limitations of this preliminary model were indicated by application to the Argo Merchant spill.

79B-0601
A TIDAL SIMULATION SYSTEM FOR ESTUARINE ECOSYSTEM RESEARCH
Johnson, R.A., L.R. Brown, and W.G. Wells. 1979.
1979 Oil Spill Conference (Prevention, Behavior, Control, Cleanup), Los Angeles, 19-22 March 1979. Washington, DC, American Petroleum Institute, 1979. p. 725-728. (API Publication No. 4308)

Estuaries, Behavior, Models, Spreading, Movement, Predictions, Physical effects, *Tidal simulations

This study describes a programmable system for simulating tidal movements in an enclosed salt-water estuarine environment. This Tidal Simulation System (TSS) can simulate various tide levels on various cycles and records performance on strip charts. Tested by Mississippi State University's Ecosystem Research Laboratory, this system uses ponds, pumps, centrally activated pneumatic valves, and a branched array of submerged outlet pipes to approximate the significant dynamic processes of an estuary.

D. FATE OF OIL IN THE ENVIRONMENT

79B-0602
HOW REAL TIME SIMULATION WAS UTILIZED IN ASSESSING TANKER OPERATIONS WITHIN PORT VALDEZ AND VALDEZ NARROWS
Keith, V.F. 1977.
Oil and Aquatic Ecosystems, Tanker Safety, and Oil Pollution Liability. Proceedings of the Cordova Fisheries Institute, held in Cordova, Alaska on April 1-3, 1977. B. Melteff (ed.). University of Alaska and Alaska Sea Grant Program, Report 77-8. p. 173-177. (NTIS Report PB-277 060)

Models, Predictions, Environmental effects, Tankers, Ports, Alaska

Real-time simulation was used to assess the environmental conditions and the effectiveness of tugboats with respect to tanker operations in the title area. The model used a 165,000 DWT tanker and a series of 5,000 HP tugboats and accounted for the following factors: Variable wind conditions; as loaded and ballast drafts; under normal and at loaded emergency (worst case) procedures; with six experienced VLCC pilots; and with and without tugboats. Among the results were that: A one-way traffic system was desirable within Valdez Narrows; operations with wind in excess of 40 knots was undesirable; and the proposed tugboats are suitable even under a worst case mechanical breakdown.

79B-0603
OIL SPILL FORECASTING - WHERE IS IT GOING?
Lissauer, I.M., and D.L. Murphy. 1979.
1979 Oil Spill Conference (Prevention, Behavior, Control, Cleanup), Los Angeles, 19-22 March 1979. Washington, DC, American Petroleum Institute, 1979. p. 649-652. (API Publication No. 4308).

Models, Oil spills, Movement, Spill trajectories, Monitoring, Predictions, Drift

There is a pressing need to improve oil spill forecasting techniques due to deficiencies in existing models, including disregard for evaporational and/or vertical dispersion, validation of techniques and outputs, and lack of error estimates. Major efforts are needed in the areas of modeling wind-driven circulation.

79B-0604
MODELING THE ASSOCIATION OF PETROLEUM HYDROCARBONS AND SUB-ARCTIC SEDIMENTS
Malinky, G., and D. Shaw. 1979.
1979 Oil Spill Conference (Prevention, Behavior, Control, Cleanup), Los Angeles, 19-22 March 1979. Washington, DC, American Petroleum Institute, 1979. p.621-623. (API Publication No. 4308)

Models, Sediments, Hydrocarbons, Movement, Subarctic regions

This model, using hydrocarbon concentrations near or below saturated solutions, determined that sedimentation via sorption to suspended mineral particles is not a major pathway for the dispersion of petroleum in the marine environment. The experiments dealt only with a single process and conclusions were limited to the concentration range and the suspended sediment types studied.

79B-0605
A COMPARATIVE RISK ASSESSMENT TECHNIQUE FOR TANKER OIL SPILLS
Ozkaynak, H., and B.L. Murphy. 1979.
1979 Oil Spill Conference (Prevention, Behavior, Control, Cleanup), Los Angeles, 19-22 March 1979. Washington, DC, American Petroleum Institute, 1979. p. 37-43. (API Publication No. 4308)

Models, Oil spills, Tankers, Predictions, Risk analysis

The tanker oil spill risk assessment model (TRAM) allows a user to investigate the way in which oil spill probabilities and amounts spilled vary with such factors as fleet composition, navigational aids, or particular properties of the route. TRAM operates through multiplication of a series of four matrices, where the rows and columns are parameterized by accident type and location. Matrices P,Q,R and S represent: probability of an accident; probability of a spill following an accident; vessel and route specific features that reasonably may be expected to alter the world tanker fleet data; and probability that the vessel will be a total loss.

79B-0606
THE SURVIVAL OF OIL SLICKS ON THE OCEAN AS A FUNCTION OF SEA STATE LIMIT
Raj, P.P.K., and R.A. Griffiths. 1979.
1979 Oil Spill Conference (Prevention, Behavior, Control, Cleanup), Los Angeles, 19-22 March 1979. Washington, DC, American Petroleum Institute, 1979. p. 719-724. (API Publication No. 4308)

Oil slicks, Behavior, Spill containment, Movement, Physical effects

This preliminary theoretical study establishes parameters and modeling techniques necessary for developing a quantitative understanding of oil slick breakup in unconfined waters, such that the threshold can be identified beyond which containment and recovery is impractical or impossible due to dispersion. Based on factors including turbulence and orbital water velocity relative to specific characteristics of the slick, the study should lead to an understanding of the interaction between sea state and oil slicks.

D. FATE OF OIL IN THE ENVIRONMENT

79B-0607
A FISHERY-OILSPILL INTERACTION MODEL
Reed, M., and M.L. Spaulding. 1978.
Assessment of Treated vs. Untreated Spills (Interim Report). M.P. Wilson, University of Rhode Island Report HCP/W4047-02, Contract No. E (11-1) 4047. 97 p.

Models, Fisheries, Oil Spills, Dispersants, Environmental effects, Fish, Fate, Biological effects, Georges Bank

An interactive fishery-oilspill model is being developed in order to learn to what extent oil spills at sea affect the commercial fish catch over the following years and under what circumstances, if any, treatment with dispersants will mitigate the effect. This model considers first-order, direct effects of an oil spill on a commercially fished population; and for the initial application of the model, the Georges Bank cod stock has been selected. This model is being interfaced with a hydrodynamics model, an oil spill fates model and a biological model currently under development by University of Rhode Island researchers.

79B-0608
A FISHERY-OIL SPILL INTERACTION MODEL
Reed, M., and M.C. Spaulding. 1979.
1979 Oil Spill Conference (Prevention, Behavior, Control, Cleanup), Los Angeles, 19-22 March 1979. Washington, DC, American Petroleum Institute, 1979. p. 63-73. (API Publication No. 4308)

Models, Oil spills, Fisheries, Predictions, Biological effects, Behavior, Fate, Fish, Spreading, Drift, Movement, Georges Bank, Atlantic Ocean, *Cod

The title paper describes the coupling of an oil spill behavior and fates model to a fisheries model to produce dynamic simulations of interactive effects between an oil spill and the cod fishery on Georges Bank, with impacts being projected into the commercial catch.

79B-0609
OUTER CONTINENTAL SHELF OIL AND GAS DEVELOPMENT: A SURVEY OF SELECTED MODELING TECHNIQUES (DRAFT)
Research and Planning Consultants. 1976.
Austin, Texas, Research and Planning Consultants, 1976. 20 p.

OCS, Offshore development, Models, Economics, Environmental effects, Oil spills, Estuaries, Groundwater, Water quality

Modeling techniques for possible use in assessing the impacts of OCS development are described, including the uses, capabilities, and products of each model. Included are models dealing with regional economics,

input/output, environmental impact identification, infrastructure cost, estuary water quality, ecology, outfalls, oil spills, and groundwater. The report is available from the above-named Consultants, 314 West 11th, Ste. 104, Austin, TX 78701.

[from US Geological Survey Circular, No. 761:#F004. 1977]

79B-0610
WATER CIRCULATION IN PRINCE WILLIAM SOUND AND THE GULF OF ALASKA
Royer, T.C. 1977.
Oil and Aquatic Ecosystems, Tanker Safety, and Oil Pollution Liability. Proceedings of the Cordova Fisheries Institute, held in Cordova, Alaska on April 1-3, 1977. B. Melteff (ed.). University of Alaska and Alaska Sea Grant Program Report 77-8. p. 165-172. (NTIS Report PB-277 060).

Predictions, Movement, Physical effects, Analytical techniques, Sampling, Fate, Gulf of Alaska

Physical oceanographic studies in the title area included temperature and salinity measurements and determination of water density and currents. Results indicate that the area would be impacted by pollutants in the Northestern Gulf of Alaska and possibly by contaminants released in the Northwest Gulf of Alaska to Kodiak.

79B-0611
CONTINGENCY PLANNING FOR OIL SPILLS: RIVERSPILL--A RIVER SIMULATION MODEL
Tsahalis, D.T. 1979.
1979 Oil Spill Conference (Prevention, Behavior, Control, Cleanup), Los Angeles, 19-22 March 1979. Washington, DC, American Petroleum Institute, 1979. p. 27-36. (API Publication No. 4308)

Models, Contingency planning, Rivers, Oil spills, Predictions, Mississippi River, *Riverspill model

A simulation model, Riverspill, was developed for the prediction of transport, spreading and associated land contamination of oil spills on rivers. The spill is characterized by spill type, volume and type of oil (including density and surface tension), whether Oil Herder is used or not, location of the spill in the river and its distance from the bank; and time of occurrence. Predictions of both the deterministic and the stochastic modes of the model were used in the development of contingency plans for the lower Mississippi River.

D. FATE OF OIL IN THE ENVIRONMENT

79B-0612
PREDICTION OF THE MOTION OF OIL SPILLS IN CANADIAN ARCTIC WATERS
Venkatesh, K., H. S. Sahota, and A.S. Rizkalla. 1979.
1979 Oil Spill Conference (Prevention, Behavior, Control, Cleanup), Los Angeles, 19-22 March 1979. Washington, DC, American Petroleum Institute, 1979. p. 677-683. (API Publication No. 4308)

Models, Oil spills, Movement, Spill trajectories, Arctic, Sea surface, Predictions, Beaufort Sea

Applicable to ice-free surface waters, this model was designed for integration into the Environmental Prediction Support System for the Canadian Beaufort Sea. The spill-movement model fairly accurately predicted location of "Orion" buoys used to simulate the motion of oil on water.

4. General Fate of Oil

79B-0613
FATE AND EFFECTS OF POLYNUCLEAR AROMATIC HYDROCARBONS IN THE AQUATIC ENVIRONMENT
Brown, R.A., and F.T. Weiss. 1978.
American Petroleum Institute Publication No. 4297. _ p.

Aromatic hydrocarbons, Toxicity, Fish, Uptake, Aquatic environment, Fate, *PNA

Polynuclear aromatic hydrocarbons (PNA's) in the environment are derived primarily from combustion processes rather than petroleum pollution; those formed by combustion are readily distinguished from petroleum PNA's by laboratory analysis. Literature studies indicate that low, if any, concentrations of toxic PNA's accumulate in commercially important fish and shellfish. It is concluded that "no material adverse effects are expected from petroleum industry activities on the fishing industries or other marine industries through the introduction of possibly toxic PNA's in the marine environment."

79B-0614
FATE OF DISPERSED OIL IN THE ENVIRONMENT: A BOOMED OIL SPILL
Buckley, J. 1979.
Spill Technology Newsletter 4(1):17-23.

Oil spills, Spill containment, Booms, Dispersants, Dispersion, Spreading, Monitoring, Movement, Fate

D. FATE OF OIL IN THE ENVIRONMENT

Described is a field experiment designed to provide information on the effectiveness of a dispersant, the degree of chemical change of the oil with time, and the parameters controlling the movement and spreading of the dispersed oil from a very small spill. The experiment involved a small oil spill inside a boomed area in an open bay, dispersal with Corexit 9527, monitoring of the dispersed oil using continuous fluorometry, and laboratory analysis of samples. Surface drogues tracked by radar were used to determine movement of the oil.

79B-0615
OIL POLLUTION IN THE COASTAL ENVIRONMENT
Farrington, J.W. 1977.
Estuarine Pollution Control and Assessment: Proceedings of a Conference [Pensacola, Florida, 11-13 February 1975]. US Environmental Protection Agency, Office of Water and Standards, 1977. Vol. 2:385-400. (Report EPA-440-1-77-007)

Sources, Fate, Source identification, Coastal waters, OCS, Monitoring, *Pollutant transfer

This paper provides a broad overview and discussion of available information on the title topic. Discussed are: Sources of oil input to the US coastal zone; methods of identifying sources of oil spillage; pathways of transfer and the physical, chemical, and biological interactions of oil with the marine environment; measurement of and current levels of oil pollution in the US coastal zone and OCS areas; research and monitoring needs, and specific recommendations for future research.

79B-0616
THE RATES OF TRANSPORT AND FATES OF PETROLEUM HYDROCARBONS IN A CONTROLLED MARINE ECOSYSTEM, AND A NOTE ON ANALYTICAL VARIABILITY
Gearing, J.N., P.J. Gearing, T. Wade, J.G. Quinn, et al. 1979.
1979 Oil Spill Conference (Prevention, Behavior, Control, Cleanup), Los Angeles, 19-22 March 1979. Washington, DC, American Petroleum Institute, 1979. p. 555-564. (API Publication No. 4308)

Fate, Evaporation, Biodegradation, Sedimentation, Solution, Weathering, Fuel oil, Hydrocarbons, Marine environment, Analytical techniques, Chromatography

Budgeting of No. 2 fuel oil hydrocarbons experimentally spilled into the Marine Ecosystem Research Laboratory tanks at the University of Rhode Island was studied. Preliminary results indicate that 1) the primary loss of oil was via evaporation; 2) biodegradation was a significant mechanims for removal of some classes of hydrocarbons from the water column; 3) 7-16% of the oil added to the microcosm sedimented after

sorption onto particulates; 4) there were substantial differences in the mechanisms and/or rates by which aromatics and alkanes moved through the microcosm. A valuable result was "a better understanding of the levels of variability to be expected when naturally inhomogeneous systems are studied by different methods in different laboratories."

79B-0617
THE EKOFISK BRAVO BLOWOUT: PETROLEUM HYDROCARBONS IN THE SEA
Grahl-Nielsen, O. 1978.
Conference on Assessment of Ecological Impacts of Oil Spills, Keystone, Colorado, 14-17 June 1978. American Institute of Biological Sciences, 1978. p. 476-487.

Spreading, Distribution, Hydrocarbons, Fate, Chemical analysis, GC/MS, Ekofisk blowout, North Sea

In the North Sea, 36 hrs after the start of the Ekofisk Bravo blowout, the Institute of Marine Research initiated standard chemical, biological, and physical oceanographic surveys and special pollution investigations. A primary objective of the study was to document the spreading and distribution of petroleum hydrocarbons in the sea. Using GC/MS it was possible to identify and quantify alkylated naphthalenes, phenanthrenes, and dibenzothiophenes originating from the blowout over an area larger than 60 nautical miles away from Bravo in the first weeks after the blowout.

79B-0618
PRESENCE AND SOURCES OF OIL IN THE SEDIMENT AND BENTHIC COMMUNITIES SURROUNDING THE EKOFISK FIELD AFTER THE BLOWOUT AT BRAVO
Johnson, J.H., P.W. Brooks, A.K. Aldridge, and S.J. Rowland. 1978.
Conference on Assessment of Ecological Impacts of Oil Spills, Keystone, Colorado, 14-17 June 1978. American Institute of Biological Sciences, 1978. p. 488-513.

Contamination, Sediments, Benthos, Hydrocarbons, Chemical analysis, GC/MS, Ekofisk blowout, North Sea

The title study was undertaken to define possible contamination of the aquatic ecosystem. Sediment and benthic samples, collected from a 260 km^2 (100 mi^2) grid centered around the Bravo platform, were processed to their isolate hydrocarbon fractions and analyzed by GC and GC/MS. Results indicated that hydrocarbons which could be linked to Bravo crude were present in the sediments and benthic samples at levels relatively low in comparison to hydrocarbons from other natural and manmade sources.

D. FATE OF OIL IN THE ENVIRONMENT

79B-0619
SINKING OF OIL IN LOS ANGELES HARBOR, CALIFORNIA FOLLOWING THE DESTRUCTION OF THE SANSINENA
Kolpack, R.L, R.W. Stearns, and G.L. Armstrong. 1978.
Conference on Assessment of Ecological Impacts of Oil Spills, Keystone, Colorado, 14-17 June 1978. American Institute of Biological Sciences, 1978. p. 379-392.

Fuel oil, Fate, Sediments, Benthos, Harbors, Sedimentation, Incineration, Distribution, Chemical effects, California, Sansinena spill

A rapid loss of lower molecular weight components occurred during the burning of the Bunker C fuel oil spilled from the Sansinena. This increased the density of the residual oil, reduced the ability of the oil to spread on the water surface, and promoted the formation of thick lenses of oil. When the oil residual sank and reached the sediment/water interface in the title area, degradation occurred slowly. The residence time for the high molecular weight residual appeared to be controlled by the rate of burial by burrowing organisms and sediment accumulation.

79B-0620
RELATIONSHIP BETWEEN HYDROCARBONS AND CHLOROPHYLL, PARTICULATE CARBON AND PLANKTON IN THE AREA BETWEEN THE FIRTH OF FORTH AND THE FORTIES OILFIELD
Mackie, P.R., R. Hardy, K.J. Whittle, D.V.P. Conway, and A.D. McIntyre. 1976.
ICES C. M. Pap. Rep., No. E:42. 12 p.

Fate, Hydrocarbons, Plankton, North Sea, UK, *Chlorophyll, *Carbon

Summary not available.

[from Marine Pollution Research Titles 4(6):#1054. 1977]

79B-0621
FATE AND EFFECT OF BUNKER C OIL SPILLED BY THE USNS POTOMAC IN MELVILLE BAY - GREENLAND - 1977
Peterson, H.K. 1978.
Conference on Assessment of Ecological Impacts of Oil Spills, Keystone, Colorado, 14-17 June 1978. American Institute of Biological Sciences, 1978. p. 331-343.

Oil spills, Fuel oil, Fate, Evaporation, Tankers, Greenland, *Potomac spill

D. FATE OF OIL IN THE ENVIRONMENT

On 5 August 1977, 380 tons of Bunker C fuel oil were spilled in Melville Bay, off Northwest Greenland. Studies of the spilled oil's fate and effects were conducted shortly thereafter. About 50-100% of the compounds with vapor pressures equal to or greater than n-alkanes up to C_{17} evaporated in a 2-week period. Some oil was lost to the water column, and the residue sank in 1000 m of water.

79B-0622
THE IMPACT OF THE SANSINENA EXPLOSION AND BUNKER C SPILL ON THE MARINE ENVIRONMENT
Soule, D.F., M.W. Wicksten, J.K. Dawson, M. Oguri, et al. 1978.
Conference on Assessment of Ecological Impacts of Oil Spills, Keystone, Colorado, 14-17 June 1978. American Institute of Biological Sciences, 1978. p. 394-443.

Fuel oil, Incineration, Biological effects, Water quality, Fate, Harbors, California, Sansinena spill

An estimated 20,000-32,000 bbl of Bunker C fuel oil spilled after the explosion and fire on the Sansinena in Los Angeles Harbor on 17 December 1976. Harbor Environmental Projects initiated a study on the spread of the oil and its impact on biology and water quality. Data gathered at the site from 1972 to December 1976 provided a baseline. Results of the study are presented.

79B-0623
DISTRIBUTION OF TAR AND RELATIONSHIP TO CHANGES IN INTERTIDAL ORGANISMS ON SANDY BEACHES IN SOUTHERN CALIFORNIA
Straughan, D. 1979.
1979 Oil Spill Conference (Prevention, Behavior, Control, Cleanup), Los Angeles, 19-22 March 1979. Washington, DC, American Petroleum Institute, 1979. p. 591-601. (API Publication No. 4308)

Tar, Natural seepage, Fate, Distribution, Beaches, Sediments, Biological effects, Marine organisms, Intertidal zone, California, Santa Barbara Channel

The title study, conducted over the 10 years following the 1969 Santa Barbara oil spill, indicated the following: Most tar in the Southern California Bight originates from natural oil seeps; on open beaches the residence time for tar is usually short, but may be longer if tar is buried during storms; and natural variables such as sediment grain size have a greater impact on species distribution and abundance than tar.

D. FATE OF OIL IN THE ENVIRONMENT

79B-0624
ASSESSMENT OF TREATED VS. UNTREATED OIL SPILLS (INTERIM REPORT)
Wilson, M.P., et al. 1978.
University of Rhode Island Report HCP/W4047-02, Contract No. E(11-1)4047.
489 p.

Oil spills, Fate, Behavior, Models, Biodegradation, Biological effects, Mollusks, Fisheries, *Research program

"This interim report is a collection of papers which represents a portion of the work that is being accomplished for the Division of Environmental Control Technology under Department of Energy Contract No. E(11-1) 4047." Individual papers are by T. Kim, et al., P. Cornillon, et al., D. Konigsberg, et al., C. Brown, et al., M. Ahmadjian, et al., D. Goldfarb, et al., L. Bhattacharya, et al., C. Ordzie, et al., and M. Reed, et al., and are abstracted separately in this issue of OPA. Topics include the fate and physical behavior of spilled oil, spill modeling, biodegradation, biological effects of oil spills on mollusks (scallops), and a fishery-oilspill interaction model.

E. POLLUTION ASPECTS OF OIL EXPLORATION, DEVELOPMENT, AND PRODUCTION

1. Biological Aspects

[No entries.]

2. Physical and Chemical Aspects

[No entries.]

3. Social and Economical Aspects

79B-0625
SOCIOECONOMIC IMPACTS OF OUTER CONTINENTAL SHELF OIL AND GAS DEVELOPMENT A BIBLIOGRAPHY
Pattison, M.L. 1977.
US Geological Survey Circular No. 761. 66 p.

Socioeconomic effects, Bibliographies, OCS, Offshore development, Oil-gas leasing, Economics, North Sea, Onshore impacts

This bibliography presents reports which are concerned primarily with the socioeconomic impacts of OCS oil-gas development, or which include sections that contain significant discussions thereof. Several of the 120 cited reports have been included because of their value in providing a broad picture of OCS oil-gas development and the associated technical aspects. Relevant entries are listed in the following categories: Introductory literature, General studies, Facility-related studies, Regional studies, North Sea experience, and Relevant methodologies.

79B-0626
ECONOMIC VALUES AND ECOLOGICAL IMPACTS ASSOCIATED WITH OIL SPILLS
Wilman, E. 1978.
Conference on Assessment of Ecological Impacts of Oil Spills, Keystone, Colorado, 14-17 June 1978. American Institute of Biological Sciences, 1978. p. 119-135.

Economics, Environmental effects, Cost analysis, Oil spills, Coastal zone management, Resource management

E. POLLUTION ASPECTS OF OIL EXPLORATION, DEVELOPMENT, AND PRODUCTION

The author discusses the problems of conflicting demands for coastal and marine resources and the need to assess economic gains and losses for rational allocation of these resources. A case study to estimate such values of environmental impacts affecting beaches in a tourist-oriented economy is presented and examined.

4. Legal and Regulatory Aspects

79B-0627
IMPLEMENTATION OF THE OFFSHORE OIL POLLUTION FUND
Beck, D.A., and P.J. Moeller. 1979.
1979 Oil Spill Conference (Prevention, Behavior, Control, Cleanup), Los Angeles, 19-22 March 1979. Washington, DC, American Petroleum Institute, 1979. p. 11-15. (API Publication No. 4308)

Liability, Compensation, OCS, Legislation, Spill cleanup, Economic effects

Title III of the OCS Lands Act Amendment of 1978 establishes a fund to deal with cleanup costs and economic damages resulting from outer continental shelf oil spills. This paper discusses four major topics: scope of damages, methods and procedures for adjudication and settlement of claims, limits of liability, and methods of establishing the financial responsibility of firms operating on the OCS.

79B-0628
WATER POLLUTION CONTROL: ASSESSING THE IMPACTS AND COSTS OF ENVIRONMENTAL STANDARDS
Luken, R.A., and E.H. Pechan. 1977.
New York, Praeger Publishers, 1977. xiii + 180 p.

Legislation, Pollution control, Oil discharges, Industries, Wastewaters, Economics, Cost analysis

The title book addresses policy changes and developments in various technological areas in relation to the mandates set forth by the 1972 Federal Water Pollution Control Act. The petroleum industry is included in many of the tabulations. [possibly oil pollution related]

E. POLLUTION ASPECTS OF OIL EXPLORATION, DEVELOPMENT, AND PRODUCTION

79B-0629
REGULATORY THINKING AND OFFSHORE RESOURCE DEVELOPMENT
Mahmood, A., G.M. Simmons, and H.M. Meadow. 1977.
Environmental Technology '77. Mt. Prospect, Illinois, Institute of Environmental Sciences, 1977. p. 58-59. Institute of Environmental Sciences, 23rd Annual Technical Meeting.

Regulations, OCS, Offshore development, Monitoring, Development, Environmental Protection

This paper examines some of the regulatory guidelines governing OCS development and monitoring of petroleum related offshore activities. The authors conclude that "in many cases the requirements exceed the state of the art and in some others too much emphasis is placed on specifying equipment types and processing methods." They suggest that clearer statements and firm implementation of control objectives can lead to effective environmental protection.

79B-0630
OIL POLLUTION PREVENTION, CONTROL AND COUNTERMEASURE PRACTICES AT SMALL PETROLEUM FACILITES
McCracken, W.F., T.J. Charlton, and F.J. Freestone. 1979.
1979 Oil Spill Conference (Prevention, Behavior, Control, Cleanup), Los Angeles, 19-22 March 1979. Washington, DC, American Petroleum Institute, 1979. p. 213-216. (API Publication No. 4308)

Oil industry, Pollution prevention, Production, EPA, Regulations, Law enforcement, Contingency planning, *Stripper wells

A study was conducted by the EPA to assess the ability of small petroleum production and distribution facilities in four regions to comply with EPA's Oil Pollution Prevention Regulation (40 CFR Part 112). The regions covered were Texas/Oklahoma, Louisiana, Penn-grade, and New England. The regulation, which involves development of an SPCC plan and certification of the plan by a registered engineer, and the survey methodology are discussed. Deficiencies found in each region and the related problems are detailed, and proposed solutions for some of these problems are given.

E. POLLUTION ASPECTS OF OIL EXPLORATION, DEVELOPMENT, AND PRODUCTION

79B-0631
THE INTERNATIONALIZATION OF SUPERFUND
Vorbach, J.E., and J.F. Ahern. 1979.
1979 Oil Spill Conference (Prevention, Behavior, Control, Cleanup), Los Angeles, 19-22 March 1979. Washington, DC, American Petroleum Institute, 1979. p. 17-22. (API Publication No. 4308)

Liability, Compensation, Spill cooperatives, Legislation, Spill cleanup, Economic effects, *Superfund

Various national and international liability and compensation regimes are examined, including those mandated by the Federal Water Pollution Control Act and the proposed Superfund, TOVALOP (Tanker Owners Voluntary Agreement Concerning Liability for Oil Pollution), and the Fund Convention. A comprehensive international regime is recommended for compensating public and private parties suffering pollution damage from oil or hazardous substances.

5. General Aspects

79B-0632
ATLANTIC MARINE ACTIVITIES INFORMATION
Amoco. 1976.
Atlanta, Georgia, Amoco Public and Government Affairs Office, 1976. 22 p.

Onshore impacts, OCS, Offshore development, Atlantic coast

A series of advertisements published in East Coast news media are featured which address the questions of the onshore impacts of offshore oil development. The brochure is available from the above-named office, P.O. Box 5077, Atlanta, GA 30302.

[from US Geological Survey Circular, No. 761:#A015. 1977]

79B-0633
THE EFFECTS OF INDUSTRIALIZATION ON THE ESTUARY
Biggs, R.B. 1977.
Estuarine Pollution Control and Assessment: Proceedings of a Conference [Pensacola, Florida, 11-13 February 1975]. US Environmental Protection Agency, Office of Water Planning and Standards, 1977. Vol. 1:309-318. (Report EPA-440-1-77-007)

Estuaries, Oil transfer, Refineries, Petrochemicals, Environmental effects, Industries, Government agencies, Coastal zone management

E. POLLUTION ASPECTS OF OIL EXPLORATION, DEVELOPMENT, AND PRODUCTION

Crude oil handling, refining, and petrochemical production are among the several industries which rely on the estuary for waterborne transportation, for process water, or for products derived from the estuarine waters or bottom sediments. This paper briefly examines the environmental effects and pressures exerted by existing and projected industries and assesses federal policies in response to the problems of industrialization. The reduction of impacts by relocating certain estuarine-dependent industrial centers to new, more environmentally acceptable sites is proposed as a feasible long-term policy.

79B-0634
THE OUTER CONTINENTAL SHELF OIL AND GAS DEVELOPMENT PROCESS: A BACKGROUND PAPER FOR STATE PLANNERS AND MANAGERS
Bureau of Land Management. 1976.
Washington, DC, Bureau of Land Management, 1976. 76 p.

OCS, Offshore development, Coastal zone management, Oil spills, Bibliographies, BLM

This report focuses on the relationship between the various phases of OCS development and corresponding coastal zone and related planning requirements. One section is devoted to major facilities and oil spills. The report includes an extensive bibliography. The report is available from the BLM Office of Minerals Policies Development and Planning (711), 18 and C St., NW, Washington, DC 20240.

[from US Geological Survey Circular, No. 761:#A001. 1977]

79B-0635
A PROCESS FOR COASTAL RESOURCE MANAGEMENT AND IMPACT ASSESSMENT
Coastal Environments, Inc. 1976.
Baton Rouge, Louisiana, Coastal Environments, Inc., 1976. 72 p.

Coastal zone management, OCS, Offshore development, Oil-gas leasing, Onshore impacts, Socioeconomic effects, Environmental effects, Louisiana

Focusing on coastal zone planning and impact assessment in Louisiana, the report includes an approach for assessing onshore impacts resulting from OCS oil and gas development. "Techniques presented are responsive to critical social and environmental criteria." [possibly oil pollution related]

[from US Geological Survey Circular, No. 761:#F012. 1977]

E. POLLUTION ASPECTS OF OIL EXPLORATION, DEVELOPMENT, AND PRODUCTION

79B-0636
SOURCE BOOK: ONSHORE IMPACTS OF OUTER CONTINENTAL SHELF OIL AND GAS DEVELOPMENT
Conservation Foundation. 1977.
Chicago, Illinois, American Society of Planning Officials, 1977. 180 p.

Onshore impacts, OCS, Offshore development, Resource management, Coastal zone management

This source book is a structured guide to offshore oil-gas development, including production processes, and related onshore facilites; onshore impacts; and planning and management techniques available to states and communities. The book is available from the above-named Society, 1313 East 60th St., Chicago, IL 60637. [possibly oil pollution related]

[from US Geological Survey Circular, No. 761:#A016. 1977]

79B-0637
A GUIDE TO RESOURCE INFORMATION FOR OCS ENVIRONMENTAL IMPACT ASSESSMENT
Georgia Department of Natural Resources. 1976.
Atlanta, Georgia Department of Natural Resources, Office of Planning and Research, Resource Planning Section, 1976. 38 p.

Onshore impacts, Development, Pipelines, Oil spills, OCS, Resource management, Environmental effects, Government agencies, Georgia

"This report identifies Georgia's information needs and the available state and federal agencies, publications, and contacts for meeting them. The information needs are presented in three broad categories: impacts related to onshore development, impacts related to pipelines, and impacts related to oil spills."

[from US Geological Survey Circular, No. 761:#D013. 1977]

79B-0638
ON CONTROLLED DISCHARGES OF OIL HYDROCARBONS FROM THE EKOFISK FIELD TERMINAL PLATFORM
Grahl-Nielsen, O., T. Neppelberg, K.H. Palmork, K. Westrheim, and S. Wilhelmsen. 1976.
ICES C. M. Pap. Rep., No. E:32. 16 p.

Oil discharges, Hydrocarbons, Platforms, North Sea, Pollution control

Summary not available.

[from Marine Pollution Research Titles 4(6):#1046. 1977]

E. POLLUTION ASPECTS OF OIL EXPLORATION, DEVELOPMENT, AND PRODUCTION

79B-0639
THE IMPACT OF OFFSHORE PETROLEUM OPERATIONS ON MARINE AND ESTUARINE AREAS
Hay, K.G. 1977.
Estuarine Pollution Control and Assessment: Proceedings of a Conference [Pensacola, Florida, 11-13 February 1975]. US Environmental Protection Agency, Office of Water Planning and Standards, 1977. Vol. 2:467-474. (Report EPA-440-1-77-0070

Offshore exploration, Offshore production, Coastal waters, Drilling, Estuaries, Environmental effects, Gulf of Mexico

Expertise gained through more than two decades of offshore oil-gas exploration and production in the coastal waters of the Gulf of Mexico, and advances in exploration drilling and production technology and equipment are major factors minimizing the danger of environmental damage from offshore petroleum operations. "Studies of the impact of oil on marine and estuarine areas are continuing, and the results so far indicate that petroleum operations can be and are being conducted in an environmentally acceptable manner."

79B-0640
ASSESSMENT OF THE ARCTIC MARINE ENVIRONMENT. SELECTED TOPICS
Hood, D.W., and D.C. Burrell (eds.). 1976.
Fairbanks, University of Alaska, Institute of Marine Science, 1976. xi + 468 p. (Occasional Publication No. 4)

Biological effects, Physical effects, Environmental effects, Baseline studies, Oil spills, Socioeconomic effects, Microorganisms, Fish, Fisheries, Arctic, North Sea, OCS, Offshore development

Twenty-eight papers on various aspects of environmental assessment of the high latitudes with respect to resource extraction are presented. Major categories include The Arctic Premise, Regional Program Perspectives, The Northern Seabed Condition, Dynamic Physical Processes, Biological Features, and Hydrocarbons in the Arctic Environment. One of the major problems emphasized is the need to determine the response of key organisms at critical stages in life cycles to the effects of man-introduced stresses such as oil pollution.

E. POLLUTION ASPECTS OF OIL EXPLORATION, DEVELOPMENT, AND PRODUCTION

79B-0641
POLLUTION PROBLEMS IN THE ESTUARIES OF ALASKA
Hood, W.D., and J.J. Goering. 1977.
Estuarine Pollution Control and Assessment: Proceedings of a Conference [Pensacola, Florida, 11-13 February 1975]. US Environmental Protection Agency, Office of Water Planning and Standards, 1977. Vol. 1:285-296. (Report EPA-440-1-77-007)

Estuaries, Pollution control, Development, Production, Oil transport, Pipelines, Tankers, Coastal waters, Industries, Alaska

Alaska's present and future coastal pollution problems are examined, based on the current rapid development of several industries, including those of petroleum exploration, production and transport. The increased petroleum production and associated pipeline and tanker transport of oil products through Alaskan coastal systems poses a major future pollution risk.

79B-0642
EFFECTS OF OFFSHORE OIL AND NATURAL GAS DEVELOPMENT ON THE COASTAL ZONE
Library of Congress. 1976.
Washington, DC, US Congress, 94th Congress, 2nd Session, 1976. 376 p.

Offshore development, OCS, Oil-gas leasing, Onshore impacts, Coastal zone management, Fisheries, Coastal waters, Compensation, Socioeconomic effects

Topics of this comprehensive Congressional Research Service study include: OCS oil-gas leasing procedures, offshore technology, environmental impacts offshore and in the coastal zone, and socioeconomic impacts. The relationship between OCS activities and the fishing industry is discussed. Also addressed are coastal zone management, and compensation to coastal states for OCS impacts. The report concludes "that OCS operations are environmentally sound, that oil spills are not a major possibility, [and] that onshore impacts will be primarily local."

[from US Geological Survey Circular, No. 761:#B003. 1977]

79B-0643
OIL AND AQUATIC ECOSYSTEMS, TANKER SAFETY, AND OIL POLLUTION LIABILITY. PROCEEDINGS OF THE CORDOVA FISHERIES INSTITUTE, HELD IN CORDOVA, ALASKA ON APRIL 1-3, 1977.
Melteff, B. (ed.). 1977.
University of Alaska and Alaska Sea Grant Program, Report 77-8. 256 p. (NTIS Report PB-277-060)

Biological effects, Economic effects, Socioeconomic effects, Environmental management, Tankers, Safety, Ecosystems, Liability, OCS, Oil industry, Pollution control, Fisheries, Alaska, Gulf of Alaska

E. POLLUTION ASPECTS OF OIL EXPLORATION, DEVELOPMENT, AND PRODUCTION

Twenty-five papers were presented at the title conference under the following topic categories: Oil and Aquatic Ecosystems; Tanker Safety and Navigation Standards; and Liability Problems Resulting from Oil Pollution and Social and Economic Impacts on the Fishing Community. The papers focused on the community of Cordova, Alaska and the surrounding fishery resources in Prince William Sound and the Central Gulf of Alaska. Individual papers are abstracted separately in this issue of OPA.

79B-0644
EFFECTS ON COMMERCIAL FISHING OF PETROLEUM DEVELOPMENT OF THE NORTHEASTERN UNITED STATES
Morse, R.W. 1976.
Woods Hole, Massachusetts, Woods Hole Oceanographic Institution, 1976. 80 p.

Fisheries, OCS, Offshore development, Regulations, Environmental effects, Onshore impacts, Oil industry, Socioeconomic effects, Atlantic Ocean

The possible impacts of OCS development on the fishing industry of the New England and Mid-Atlantic States area are surveyed. This study considers the offshore physical environment, fishing techniques, offshore petroleum activities, and the legal-regulatory framework. Effects of oil pollution in terms of onshore and offshore interactions are examined and recommendations to industry and government for minimizing undesired consequences are presented.

[from US Geological Survey Circular, No. 761:#B011. 1977]

79B-0645
FACTBOOK: ONSHORE FACILITIES RELATED TO OFFSHORE OIL AND GAS DEVELOPMENT
New England River Basins Commission. 1976.
Boston, Massachusetts, New England River Basins Commission, 1976. _ p.

Onshore impacts, Offshore development, Refineries, Oil transfer, Petrochemicals, *Onshore facilities

Possible impacts of facilities associated with offshore oil-gas development are discussed. Facilities covered include: Service bases, repair and maintenance yards, transportation facilities, gas processing and treatment plants, refineries, platform fabrication yards, petrochemical plants and partial processing facilities. The book is available from the above-named Commission, NERBC/RALI Project, 55 Court St., Boston, MA 02108. [possibly oil pollution related]

[from US Geological Survey Circular, No. 761:#C001. 1977]

E. POLLUTION ASPECTS OF OIL EXPLORATION, DEVELOPMENT, AND PRODUCTION

79B-0646
NOTICE OF RESEARCH CONDUCTED IN THE USA ON THE EFFECTS ON COMMERCIAL FISHING OF OFFSHORE PETROLEUM DEVELOPMENT
Smith, K.A. 1976.
ICES C. M. Pap. Rep., No. B:17. 9 p.

Environmental effects, OCS, Offshore development, US, Fisheries, Fish, *Research projects

Summary not available.

[from Marine Pollution Research Titles 4(6):#1060. 1977]

79B-0647
FISHING AND PETROLEUM INTERACTIONS ON THE GEORGES BANK: AREAS OF PARTICULAR INTEREST TO INDUSTRIES, VOLUME I
Olsen, S.B., and S.B. Saila. 1976.
Boston, Massachusetts, New England Regional Commission, Technical Report No. 76-3. 20 p.

Offshore development, Fisheries, Oil industry, Resource management, Environmental effects, Georges Bank

Summary information for planning and management of the resources and industries in the Georges Bank area is provided. Included are maps and tabulations of the various activities and environmental characteristics that aid in the evaluation of potential interactions between the fishing and petroleum industries. The report is available from the above-named Commission, 53 State St., Boston, MA 02109. [possibly oil pollution related]

[from US Geological Survey Circular, No. 761:#D020. 1977]

79B-0648
PROCEEDINGS OF A WORKSHOP ON ENVIRONMENTAL OCEANOGRAPHY OF THE GULF OF MEXICO, COLLEGE STATION, TEXAS, 15-16 MARCH 1976
Texas Agricultural and Mechanical University, Department of Oceanography, 1976.
Texas A&M University, Report CONF-760363, Contract E(40-1)-5017. 55 p. (NTIS Report ORO-5017-1.)

Environmental effects, Offshore exploration, Offshore production, OCS, Refining, Oil transport, Petroleum products, Gulf of Mexico, *Conference

Energy-related environmental problems in the Gulf of Mexico and a framework for a research program to solve these problems were the focus of the title conference. A major concern was activity related to offshore oil and gas development, production, transportation and refining, and the use of petroleum products. Different viewpoints on Gulf environmental problems were expressed.

[from Report NTIS/PS-78/0179. p. 17. 1978]

E. POLLUTION ASPECTS OF OIL EXPLORATION, DEVELOPMENT, AND PRODUCTION

79B-0649
FISHING AND PETROLEUM INTERACTIONS ON GEORGES BANK, VOLUME II
University of Rhode Island, Coastal Resources Center. 1976.
Boston, Massachusetts, New England Regional Commission, Technical Report No. 76-3. _ p.

Offshore development, Fisheries, Oil industry, OCS, Oil-gas leasing, Georges Bank

This final volume investigates the probable interactions between OCS oil and gas development and the fishing industry on Georges Bank. The potential magnitude, duration, and characteristics of offshore petroleum activities, and the productivity of the fishing industry are assessed. The report is available from the above-named Commission, 53 State St., Boston, MA 02109. [possibly oil pollution related]

[from US Geological Survey Circular, No. 761:#D021. 1977]

79B-0650
SOCIAL, ECONOMIC, AND ENVIRONMENTAL REQUIREMENTS AND IMPACTS ASSOCIATED WITH THE DEVELOPMENT OF OIL AND GAS RESOURCES IN THE OUTER CONTINENTAL SHELF OF THE GULF OF MEXICO
Wales, R.W., J.W. Gladden, Jr., and W.R. Roberts. 1976.
Long Beach, Mississippi Marine Resources Council, 1976. 274 p.

Socioeconomic effects, Environmental effects, Offshore development, OCS, Gulf of Mexico, Louisiana

Social, economic, and environmental impacts which could be expected from the various offshore oil and gas development activities in the Gulf of Mexico, particularly in the Louisiana area, are examined. The report is available from the above-named Council, P.O. Drawer 959, Long Beach, MS 39560.

[from US Geological Survey Circular, No. 761:#D022. 1977]

79B-0651
THE OIL THREAT TO BRIDGER-TETON
Whipple, D. 1977.
The Living Wilderness 41(139):4-8.

Development, Exploration, Resource management, Wildlife, Environmental deterioration, Environmental protection

This article reports on the growing conflict between oil and gas development and wilderness protection in a Wyoming national forest. The discovery of large oil deposits in Bridger-Teton National Forest raises the possibility of large-scale roadbuilding, oil and gas drilling operations, destruction of wildlife habitats, and vastly increased population pressures in an area that is presently de facto wilderness.

F. POLLUTION ASPECTS OF OIL TRANSPORT, TRANSFER, AND STORAGE

1. Tankers and Ships

79B-0652
THE METULA OIL SPILL
Gunnerson, C.G., and G. Peter. 1976.
Boulder, Colorado, National Oceanic and Atmospheric Administration, Environmental Research Laboratories, 1976. 37 p. NOAA Special Report. (NTIS Report PB-270 418/7ST.)

Oil spills, Spill response, Environmental effects, Movement, Spreading, Metula spill, Strait of Magellan, Chile

The title report describes short and long-term environmental damage caused by the grounding of the supertanker Metula in the Strait of Magellan. Included are the background of the accident, a description of the environment, reasons why cleanup was not attempted, and a discussion of further research needs.

79B-0653
REPORT OF THE VLCC METULA GROUNDING AND REFLOATING IN THE STRAIT OF MAGELLAN IN 1974
Price, R.I. 1976.
The Metula Oil Spill. C.G. Gunnerson, and G. Peter. 1976. Boulder, Colorado, National Oceanic and Atmospheric Administration, Environmental Research Laboratories, 1976. 40 p. NOAA Special Report. (Appendix B, attached microfiche) (NTIS Report PB-270 418/7ST)

Oil spills, Spill response, Foreign governments, Tankers, Oil transfer, Metula spill, Strait of Magellan, Chile

The title report discusses facts pertaining to the grounding of the Metula, the resulting pollution, and subsequent offloading and refloatation with US Coast Guard assistance. It includes an executive summary, a narrative report, a chronology of events, and enclosures.

79B-0654
NOTE ON A TANKER SHIPWRECK IN CORUNA BAY, (GALICIA, NW SPAIN)
Quiroga, H. 1976.
ICES C. M. Pap. Rep., No. E:25. 3 p.

Tankers, Urquiola spill, Spain

Summary not available.

[from Marine Pollution Research Titles 4(6):#1058. 1977]

F. POLLUTION ASPECTS OF OIL TRANSPORT, TRANSFER, AND STORAGE

2. Pipelines

79B-0655
PIPELINE AND HAZARDOUS MATERIALS TRANSPORTATION SAFETY AND OIL SPILL REDUCTION
Driscoll, W.J. 1979.
1979 Oil Spill Conference (Prevention, Behavior, Control, Cleanup), Los Angeles, 19-22 March 1979. Washington, DC, American Petroleum Institute, 1979. p. 23-25. (API Publication No. 4308)

Pipelines, Oil spills, Government agencies, Safety, Legislation, Pollution prevention, Regulations, Environmental protection

Although statistics indicate that about 5% of US oil spill incidents are caused by pipeline breaks, these spills cause about 15% of the annual total accidental release. These types of spills are consequently the subject of particular attention of the Materials Transportation Bureau, US Department of Transportation. Certain deficiencies of the applicable laws must be reviewed and corrected to provide an adequate safety program of maximum effectiveness with important environmental considerations.

79B-0656
OFFSHORE PIPELINES (A BIBLIOGRAPHY WITH ABSTRACTS)
Habercom, G.E., Jr. 1978.
Report NTIS/PS-78/0179. _p. Report for 1964-Jan. 1978. (Supersedes Report NTIS/PS-77/0098.)

Pipelines, Environmental effects, Bibliographies, Offshore development, OCS, Oil transfer, Oil transport, Cost analysis

Environmental aspects of offshore pipelines are among the topics investigated in these government-sponsored research reports. Hydrodynamics, benefit-costs of underwater pipeline transportation, and risk analysis are among the parameters covered. Twenty-seven of the 121 abstracts presented are new entries to the previous edition. [possibly oil pollution related]

F. POLLUTION ASPECTS OF OIL TRANSPORT, TRANSFER, AND STORAGE

3. Loading and Offloading Facilities

79B-0657
VALDEZ--THE SUPERPORT OF THE FUTURE
Purdy, H.A., W.L.N. Fisken, G.G. Perkins, and R. Bayliss. 1979.
1979 Oil Spill Conference (Prevention, Behavior, Control, Cleanup), Los Angeles, 19-22 March 1979. Washington, DC, American Petroleum Institute, 1979. p. 359-365. (API Publication No. 4308)

Ports, Oil terminals, Oil transport, Industries, Government agencies, Spill response, Spill cleanup, Contingency planning, USCG, Alaska, *Port Valdez

The facilities and pollution control operations at Port Valdez, Alaska are described relative to the cooperative efforts between industry and government to protect the environment. Included are discussions of a simulated oil spill drill, development of an oil sensitivity atlas for Prince William Sound, and the role of the US Coast Guard in vessel traffic management in Valdez.

79B-0658
VLCC LIGHTERING OPERATIONS IN SOUTHERN CALIFORNIA
Wolfson, M.W. 1979.
1979 Oil Spill Conference (Prevention, Behavior, Control, Cleanup), Los Angeles, 19-22 March 1979. Washington, DC, American Petroleum Institute, 1979. p. 119-120. (API Publication No. 4308)

Tankers, Oil transfer, Contingency planning, Spill cleanup, Equipment, California, *Lightering operations, *VLCCs.

The techniques employed in very large crude carrier (VLCC) lightering operations in the Gulf of San Clemente are detailed. Lightering is necessary because of a lack of deepwater port facilities able to accommodate VLCCs in Southern California. Each of the three companies involved in the lighterings, Chevron, Shell, and Coastal States Gas Corporation, have submitted oil spill contingency plans to the US Coast Guard and the California Department of Fish and Game. The plans and the equipment specified by them are also described.

F. POLLUTION ASPECTS OF OIL TRANSPORT, TRANSFER, AND STORAGE

4. Storage Facilities

79B-0659
OIL SPILL PREVENTION AND CONTROL AT NAVAL SHORELINE ACTIVITIES
Hansen, W.G., E. Clements, and E.A. Lundt. 1979.
1979 Oil Spill Conference (Prevention, Behavior, Control, Cleanup), Los Angeles, 19-22 March 1979. Washington, DC, American Petroleum Institute, 1979. p. 217-224. (API Publication No. 4308)

Storage, Oil tanks, Pollution prevention, USN, EPA, Regulations, Contingency planning, Inland, Coasts

A comprehensive program has been undertaken by the US Navy in response to EPA and USCG regulations to minimize the potential for land-based oil spills from naval shoreline oil storage and handling facilities. Maintenance and construction projects have been initiated to correct existing deficiencies in the facilities. Spill prevention, control, and countermeasures (SPCC) and oil spill contingency plans have been reviewed and upgraded. Specific deficiencies identified by an engineering team are tabulated, and recommended modifications at one shoreline activity are diagrammed.

5. Legal and Regulatory Aspects

79B-0660
OIL SPILL LIABILITY AND COMPENSATION
Carven, C.J. 1979.
1979 Oil Spill Conference (Prevention, Behavior, Control, Cleanup), Los Angeles, 19-22 March 1979. Washington, DC, American Petroleum Institute, 1979. p. 7-10. (API Publication No. 4308)

Liability, Compensation, Spill cooperatives, Legislation, Spill cleanup, Economic effects

Oil spill compensation regimes discussed in this paper are two voluntary schemes, TOVALOP (Tanker Owners Voluntary Agreement Concerning Liability for Oil Pollution) and CRISTAL (Contract Regarding an Interim Supplement to Tanker Liability for Oil Pollution), and two IMCO conventions, the Civil Liability Convention and the Fund Convention. Key features of the proposed "superfund" legislation are presented for comparative purposes.

F. POLLUTION ASPECTS OF OIL TRANSPORT, TRANSFER, AND STORAGE

79B-0661
REVIEW OF ALASKA LEGISLATIVE RESPONSES
Croft, C. 1977.
Oil and Aquatic Ecosystems, Tanker Safety, and Oil Pollution Liability. Proceedings of the Cordova Fisheries Institute, held in Cordova, Alaska on April 1-3, 1977. B. Melteff (ed.). University of Alaska and Alaska Sea Grant Program, Report 77-8. p. 157-164. (NTIS Report PB-277 060)

Legislation, Alaska, Safety, Pollution prevention, Environmental protection

The Tanker-Vessel Act, Senate Bill 406, was passed by the previous session of the Alaska Legislature. The author, who was the prime sponsor of the bill, discusses provisions including the requirement of Loran-C collision avoidance devices or two radars, the traffic regulatory capabilties under the Department of Environmental Conservation, the requirement of a Certificate of Risk Avoidance, and the establishment of the Coastal Protection Fund.

79B-0662
A SAFETY ANALYSIS OF THE FOREIGN TANKER BOARDING PROGRAM--JANUARY 1977 THROUGH JUNE 1978
Ecker, W.J., and R.J. Sancrant. 1979.
1979 Oil Spill Conference (Prevention, Behavior, Control,Cleanup), Los Angeles, 19-22 March 1979. Washington, DC, American Petroleum Institute, 1979. p. 317-322. (API Publication No. 4308)

Tanker, Ships, Regulations, Safety, Ports, USCG, Law enforcement, Statistics

The US Coast Guard Foreign Tank Vessel Examination Program is outlined. Data collected from over 3400 examinations of foreign flag ships calling at US Ports between January 1977 and June 1978 revealed that 74% of the total deficiencies found were attributable to tankers over 10 years of age, and that these older vessels accounted for 55% of the vessels examined. Deficiency data tabulated for vessels registered under the six most frequently examined flags for 3 successive 6-month periods indicated a decline in the overall number of deficiencies per examination over the 3 periods, and attest to the effectiveness of the program.

F. POLLUTION ASPECTS OF OIL TRANSPORT, TRANSFER, AND STORAGE

79B-0663
TANKER SAFETY AND NAVIGATIONAL STANDARDS
Gearin, L.F. 1977.
Oil and Aquatic Ecosystems, Tanker Safety and Oil Pollution Liability. Proceedings of the Cordova Fisheries Institute, held in Cordova, Alaska on April 1-3, 1977. B. Melteff (ed.). University of Alaska and Alaska Sea Grant Program, Report 77-8. p. 183-185. (NTIS Report PB-277-060)

Safety, Legislation, US, Tankers, Pollution prevention, Compensation, Regulations

The author provides an industry viewpoint on the safety of tankers and reviews US regulations on vessel safety, oil pollution prevention and compensation.

79B-0664
NATIONAL AND INTERNATIONAL TANKER STANDARDS
Greenburg, E.V.C. 1977.
Oil and Aquatic Ecosystems, Tanker Safety, and Oil Pollution Liability. Proceedings of the Cordova Fisheries Institute, held in Cordova, Alaska on April 1-3, 1977. B. Melteff (ed.). University of Alaska and Alaska Sea Grant Program, Report 77-8. p. 147-155. (NTIS Report PB-277 060)

Safety, Legislation, Regulations, Tankers, Pollution prevention, Guidelines, US

This paper discusses federal legislation designed to create a sound marine transportation system, with emphasis on design, construction, equipment, manning, and operation standards. Also examined are the laws' relationship to the international agreement process, and its implementation.

79B-0665
TANKER SAFETY AND NAVIGATION IN ALASKA
Hayes, J.B. 1977.
Oil and Aquatic Ecosystems, Tanker Safety, and Oil Pollution Liability. Proceedings of the Cordova Fisheries Institute, held in Cordova, Alaska on April 1-3, 1977. B. Melteff (ed.). University of Alaska and Alaska Sea Grant Program, Report 77-8. p. 135-145. (NTIS Report PB-277 060)

USCG, Tankers, Safety, US government, Regulations, Alaska, Law enforcement, *Vessel Traffic Service

The author describes the US Coast Guard's role in tanker safety and navigation and discusses recent developments in policy on a national level. The Vessel Traffic Service which encompasses Valdez, Prince William Sound, and the approaches to Hinchinbrook, is also assessed.

F. POLLUTION ASPECTS OF OIL TRANSPORT, TRANSFER, AND STORAGE

6. General Aspects

79B-0666
PETROLEUM TRANSPORTATION AND PRODUCTION - OIL SPILL AND POLLUTION CONTROL
Sittig, M. 1978.
Park Ridge, New Jersey, Noyes Data Corporation, 1978. viii + 360 p.

Oil industry, Pollution control, Equipment, Drilling, Oil transport, Oil transfer, Storage, Pipelines, Tankers, Detection, Spill containment, Spill removal, Spill disposal

The title book provides a thorough review of the equipment available for control of oil spills and other pollutants in the production, storage, and transportation of petroleum products. The chapter entitled "Oil Spills on Water" constitutes the majority of the book and includes sections on oil spill detection, containment, treatment, removal, and disposal methods. Manufacturer, US patent number, and inventor indexes are included.

G. PETROLEUM AND PETROCHEMICAL INDUSTRY WASTE TREATMENT AND DISPOSAL

1. Waste Treatment and Disposal Methods

79B-0667
OIL CONTAINING EFFLUENT TREATMENT BY GRAVITY SEPARATION
British Petroleum Co. Ltd. 1977.
US Patent 4,105,553

Wastewater treatment, Oil-water separation, Gravity separation, Sludge, Reuse, Patent

Oily wastewaters are treated by a method which utilizes gravity separation to yield an oily fraction, a watery fraction, and a wet, oily sludge fraction; heating and combining the oily phase and sludge, and filtering the mixture to retain solids and to pass oil and water. The oil and water are again passed through a separator to recover a reusable oil fraction.

4,105,553
OIL-CONTAINING EFFLUENT TREATMENT BY GRAVITY SEPARATION
Guy Franklin Oldham, London, England, assignor to The British Petroleum Company Limited, London, England
Filed Mar. 30, 1977, Ser. No. 783,046
Claims priority, application United Kingdom, Apr. 8, 1976, 14294/76
Int. Cl.[2] B01D *23/00*
U.S. Cl. 210—73 W 5 Claims

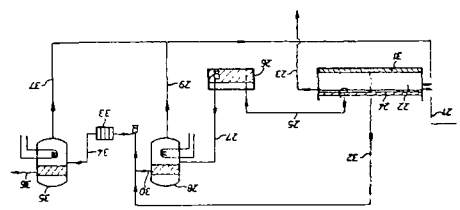

79B-0668
EFFECTIVENESS OF A LARGE-SCALE BALLAST TREATMENT PROCESS
Lysyi, I., R. Rushworth, R. Melvold, and J. Farlow. 1979.
1979 Oil Spill Conference (Prevention, Behavior, Control, Cleanup), Los Angeles, 19-22 March 1979. Washington, DC, American Petroleum Institute, 1979, p. 133-137. (API Publication No. 4308)

Ballast, Oil removal, Wastewater treatment, Monitoring, Analytical techniques, Gravity separation, Flocculation, Hydrocarbons, Aromatic hydrocarbons, Alaska

A study was conducted at the ballast treatment facility in Port Valdez, Alaska, to assess 1) the effectiveness of petroleum removal from ballast water, 2) the nature of the chemical changes in the process stream, and 3) the suitability of various analytical techniques for monitoring plant operation and measuring final effluent quality. Results indicate that, although 99% of the petroleum is removed by gravity separation, the treatment process changes the chemical composition of organics in the treated effluent so that the standard methods for monitoring the effluent quality are rendered inadequate. Significant quantities of volatile hydrocarbons and petroleum nonhydrocarbons are discharged daily into Port Valdez Harbor as a result.

G. PETROLEUM AND PETROCHEMICAL INDUSTRY WASTE TREATMENT AND DISPOSAL

79B-0669
WASHINGTON STATE REFINERIES: PETROLEUM, PETROLEUM DERIVATIVES AND WASTEWATER EFFLUENT CHARACTERISTICS
Oceanographic Institute of Washington. 1976.
Final report, Contract NOAA-03-6-022-35189. _ p. Seattle, Oceanographic Institute of Washington, 1976. (NOAA/ERL/MESA Technical Memorandum)

Crude oil, Petroleum products, Refineries, Wastewaters, Chemical analysis, Disposal, Puget Sound, Washington

The types of petroleum products and their derivatives which could potentially reach the waters of Puget Sound are described. Included is a summary of available information on the chemical characteristics, amounts processed, and final disposal of crude oils, refined petroleum products, and wastewater effluents associated with the Puget Sound refineries.

79B-0670
MODERN POLLUTION CONTROL TECHNOLOGY. VOL. II
Research and Education Association. 1977.
New York, Research and Education Association, 1977. 1009 p.

Refineries, Petrochemicals, Pollution control, Economics, Equipment, Wastewater treatment, Solid wastes, Disposal

This volume deals with water pollution control and solid waste disposal and is part of a two-volume review of state-of-the-art technology in the field of modern pollution control. The technical and economic feasibility of current and planned processes and equipment are compared and assessed. Many of the 43 chapters cover topics of relevance to the oil production, refining, and petrochemicals industry.

79B-0671
BIODISPOSAL FARMING OF REFINERY OILY WASTES
Weldon, R.A. 1979.
1979 Oil Spill Conference (Prevention, Behavior, Control, Cleanup), Los Angeles, 19-22 March 1979. Washington, DC, American Petroleum Institute, 1979. p. 609-614. (API Publication No. 4308)

Waste oil, Disposal, Land farming, Sludge, Biodegradation

A study on a land farming technique developed by Suntech, Inc. was undertaken in 1976 at three locations in the US. This paper presents the results obtained at the Toledo, Ohio site during the first 2 years. Sludge applied at a rate of >1000 bbl per acre per year yielded biodegradation rates of 75-80%. Buildup and migration of waste constituents were also examined, and the results are reported.

G. PETROLEUM AND PETROCHEMICAL INDUSTRY WASTE TREATMENT AND DISPOSAL

2. Oil-Water Separation

79B-0672
METHOD OF REMOVING OIL FROM WATER
Exxon Production Research Co. 1978.
US Patent 4,123,354

Oil-water separation, Platforms, Sorbents, Absorption, Patent, *Sorbent endless cord

The oil-water mixture produced on an offshore platform is injected downward into a partially submerged vertical pipe adjacent to the platform. An endless oleophilic fibrous cord is passed through the mixture to selectively contact and absorb the oil. Collected oil is removed at the surface, and the cord is returned to the lower end of the pipe for renewed contact with the oil-water mixture.

4,123,354
METHOD OF REMOVING OIL FROM WATER
Robert E. Williams, Houston, Tex., assignor to Exxon Production Research Company, Houston, Tex.
Filed Nov. 7, 1977, Ser. No. 849,158
Int. Cl.[2] B01D *15/00, 33/14*
U.S. Cl. 210—40 6 Claims

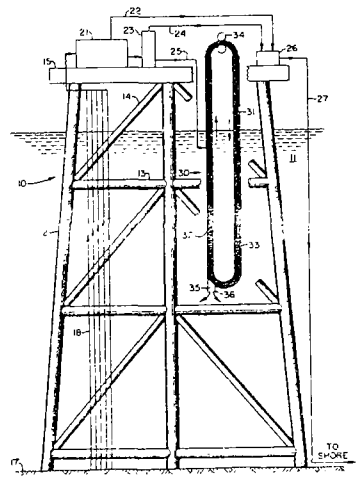

3. Waste Oil Reclamation and Reuse

79B-0673
RECYCLE USED MOTOR OIL
American Petroleum Institute. 1979.
Washington, DC, American Petroleum Institute Marketing Department, 1979. 22 p.

Crankcase oil, Waste oil, Reclamation, Recycling, Conservation, Reuse

G. PETROLEUM AND PETROCHEMICAL INDUSTRY WASTE TREATMENT AND DISPOSAL

"This manual outlines a detailed program for the collection and recycling of used motor oil generated by the motorist who drains his own oil. An effective program to collect this used oil requires a broadbased collection system and an effective public education campaign to make the consumer aware of the magnitude of the environmental problem. The solution to this problem will bring about a cleaner environment and the conservation of a valuable resource."

4. Legal and Regulatory Aspects

[No entries.]

H. MISCELLANEOUS

79B-0674
ENVIRONMENTAL INDICES
Inhaber, H. 1976.
New York, John Wiley & Sons, 1976. xiv + 178 p.

Environmental effects, Detection, Sources

Summary not available. [possibly oil pollution related]

[from Water, Air, and Soil Pollution 8(4):488. 1977]

79B-0675
A SUMMARY OF ACCIDENTS RELATED TO NON-NUCLEAR ENERGY
Mitre Corporation. 1977.
Mitre Corporation Report M76-88, Contract EPA-68-01-3188. 19 p.
(NTIS Report PB-271 506/8ST.)

Exploration, Production, Oil transport, Storage, Pipelines, Refineries, Oil shale, Oil spills, Offshore development, *Accidents

"This report summarizes the accidents and unscheduled events which may occur during the extraction, production, transportation, and utilization of non-nuclear energy technologies." Included are oil spills and other accidents involving oil storage, pipelines, refineries, offshore sites and exploration.

[from Report NTIS/PS-78/0179. p. 9. 1978]

79B-0676
BETWEEN A DAM AND A HARD SPOT
Morrison, C.D. 1979.
1979 Oil Spill Conference (Prevention, Behavior, Control, Cleanup), Los Angeles, 19-22 March 1979. Washington, DC, American Petroleum Institute, 1979. p. 407-410. API Publication No. 4308)

Ships, Rivers, Ice, Pollution prevention, *Accidents, *Ohio River

The development of an ice gorge in the Ohio River during the most severe Ohio winter in history, and the eventual breakage of the gorge, on 27 January 1978, caused a number of towboats and barges to be either swept over the Markland Locks and Dam or to become lodged against it, presenting a major pollution and explosion threat. The events following the gorge break and the measures taken to avert a potential disaster are related in this paper. Although the incident resulted in the discharge of 1000 gal of gasoline and the sinking of several vessels, injury and death were prevented by the cooperative efforts of the responding agencies.

H. MISCELLANEOUS

79B-0677
COMPARATIVE BACTERIOLOGICAL VALORIZATION OF POLLUTION AND SOME DURABLE POLLUTANTS OF SEAWATER IN EASTERN REGION OF ADRIATIC COAST FOR PERIOD 1970-1973
Pavletić, Z., B. Stilinović, I. Munjko, and S. Sobot. 1976.
Acta Adriatica 17(8):28 p.

Contaminants, Seawater, Bacteria, Coastal waters, *Adriatic Sea, *Valorization

Summary not available. [possibly oil pollution related]

[from Marine Pollution Research Titles 4(9):#1568. 1977]

79B-0678
CITIZEN PARTICIPATION: THE ROLE OF THE RADICAL SKEPTIC
Tupper, F. 1977.
Oil and Aquatic Ecosystems, Tanker Safety, and Oil Pollution Liability. Proceedings of the Cordova Fisheries Institute, held in Cordova, Alaska on April 1-3, 1977. B. Melteff (ed.). University of Alaska and Alaska Sea Grant Program, Report 77-8. p. 197-202. (NTIS Report PB-277-060)

Ecosystems, Environmental protection, Oil transport, Resource management, Coastal zone management, Alaska, *Public participation

The author discusses the threat to the Alaskan coastal marine ecosystem and the Alaskan residents' basic lifestyle, posed by the prospect of increased oil activities, specifically tanker traffic. Various relevant issues of consequence to the environmental quality of the region are presented, and a case is made for public scrutiny and participation in resource decisionmaking.

79B-0679
DIVISION OF ENVIRONMENTAL CONTROL TECHNOLOGY PROGRAM-1977
US Department of Energy. 1978.
Report DOE/EV-0015. xi + 149 p.

Pollution control, Wastewater treatment, Development, Oil shale, *Research projects

This document contains summaries of research projects in progress during the fiscal year 1977 under the title program. Areas covered include petroleum and gas, and oil shale.

H. MISCELLANEOUS

79B-0680
A SUMMARY OF KNOWLEDGE OF THE CENTRAL AND NORTHERN CALIFORNIA COASTAL ZONE AND OFFSHORE AREAS. VOLUME 1. PHYSICAL CONDITIONS. BOOK 1
Winzler and Kelly. 1977.
NTIS Report PB-274 210/4ST. Contract DI-AA550-CT6-52. 402 p. Final report.

Pacific coast, OCS, Offshore development, California, Bibliographies, *Environmental information, *Literature review

A comprehensive literature survey with a bibliography of over 12,000 entries is presented on the existing knowledge in physical and biological sciences and the existing socioeconomic and cultural conditions of the coastal areas from Ventura County to the Oregon border, inclusive of the northern Channel Islands. Environmental information, ongoing research, and recommendations for further research are included. [possibly oil pollution related]

[from Report NTIS/PS-78/0179. p. 2. 1978]

SECTION II

CURRENT RESEARCH PROJECTS

Title, contract information, and a summary of project objectives are provided in each entry. Sources of project information include: The Smithsonian Science Information Exchange (SSIE); API Environmental Research Annual Status Report; Maritime Research Information Service Abstracts; Scientific and Technical Aerospace Reports; Department of Environment, Canada, Spill Technology Newsletter; Northwest and Alaska Fisheries Center Monthly Report; and written inquiries to organizations and researchers. Current status information and publications resulting from the projects are presented when such information is available from the principal investigators or performing organizations. The source of status information is given at the end of each entry.

Entries are grouped according to subject and then ordered sequentially with a citation number 79B-R---. Some of the projects listed in previous Oil Pollution Abstracts were recently renewed. These projects are relisted with a current serial number, followed by the original number in parentheses. To locate the original entry, refer to the following list:

Citation Numbers	Dates Covered	Report Number
R-001-74 to R-165-74	July 74 - Oct. 74	EPA-670/2-75-003
R-166-74 to R-244-74	Nov. 74 - Feb. 75	EPA-670/2-75-044
R-245-74 to R-268-74	Feb. 75 - Apr. 75	EPA-670/2-75-059
R-269-74 to R-342-74	May 75 - July 75	EPA-600/2-76-129
R-269-75 to R-304-75	Aug. 75 - Oct. 75	EPA-600/2-76-113
R-001-76 to R-035-76	Nov. 75 - Jan. 76	EPA-600/2-76-185
R-036-76 to R-063-76	Feb. 76 - Apr. 76	EPA-600/2-76-215
R-064-76 to R 123-76	May 76 - July 76	EPA-600/2-76-266
R-124-76 to R-175-76	Aug. 76 - Oct. 76	EPA-600/2-77-037
R-001-77 to R-022-77	Nov. 76 - Jan. 77	EPA-600/2-77-075
R-023-77 to R-039-77	Feb. 77 - Apr. 77	EPA-600/2-77-111
R-040-77 to R-075-77	May 77 - July 77	EPA-600/2-77-243
R-076-77 to R-096-77	Aug. 77 - Oct. 77	EPA-600/2-78-005
R-001-78 to R-020-78	5(1) Nov. 77 - Jan. 78	EPA-600/2-78-071
R-021-78 to R-057-78	5(2) Feb. 78 - May 78	EPA-600/7-78-160
R-058-78 to R-150-78	5(3) Jun. 78 - Sep. 78	EPA-600/7-78-218
R-151-78 to R-200-78	5(4) Oct. 78 - Dec. 78	EPA-600/7-79-040
79A-R001 to 79A-R009	6(1) Jan. 79 - Mar. 79	EPA-600/_____

CURRENT RESEARCH PROJECTS

A. OIL POLLUTION DETECTION AND EVALUATION

1. Detection and Monitoring

79B-R010
NAVY ENVIRONMENT: DEVELOPMENT OF AN ENZYMIC ELECTRODE OIL IN WATER DETECTOR
Principal Investigator: Findl, E.
Performing Organization: BioResearch, Inc., 315 Smith St., Farmingdale, NY 11735
Supporting Organization: US Dept. of Defense, Navy, Office of Naval Research, 800 N. Quincy Ave., Arlington, VA 22217. Contract N00014-78-C-0230
Period: 3/78 - 12/78
Funds: $40,000 FY 78

Detection, Hydrocarbons, Bilges, Wastewaters, Pollution control, Bacteria, *Enzyme electrode

This research was undertaken to develop a hydrocarbon dioxygenase electrode oil-in-water sensor capable of detecting low concentrations (15-100 ppm) of petroleum hydrocarbons in bilge water.

[from SSIE No. GQN-875240]

Status: A dual electrode oil-in-water sensor has been designed and constructed. Suspensions of naphthalene-grown *Pseudomonas putida* were placed in front of the electrode membrane of a commercial oxygen probe. Preliminary tests indicated a high endogenous respiration and relatively low enzyme activity of the bacterial cells.

Reports and Publications

DEVELOPMENT OF AN ENZYMIC ELECTRODE OIL IN WATER SENSOR
Cundell, A.M., N.J. Patni, and E. Findl. 1979.
Report ER-013179. Final Report.

Information Source: E. Findl, address above.

79B-R011 (R-176-78)
BIOLOGICAL INDICATORS OF ENVIRONMENTAL INSULTS TO AQUATIC RESOURCES
Principal Investigator: Mayer, F.L.
Performing Organization: US Dept. of the Interior, Fish & Wildlife Service, Division of Fishery Ecology Research, Route 1, Columbia, MO 65201
Supporting Organization: Same
Period: 10/77 - Cont.
Funds: $157,691 FY 79

Bioindicators, Monitoring, Contamination, Biological effects

Objectives include the following: 1) To extend the monitoring concept to include biological approaches to measure the status of aquatic resources; 2) to develop useful biological indicators of habitat quality for interpreting and predicting the resource status; 3) to investigate response

profiles of individual organisms and whole communities to representative contaminants; 4) to apply indicators and profiles developed to field monitoring programs of the Field Research Units through the Field Research Coordination Unit; 5) to provide the Field Research Coordination Unit and Field Research Units with the technical capacity for detection and analysis of present and future contaminant effects on aquatic resources.

[from SSIE No. ZUV-291-1]

79B-R012 (R-099-78)
NAVY ENVIRONMENT: BACTERIAL CHEMOTAXIS AS A BIOINDICATOR OF MARINE POLLUTION

Principal Investigator:	Mitchell, R., and G. McKay
Performing Organization:	Harvard University, School of Engineering, Cambridge Station, Cambridge, MA 02138
Supporting Organization:	US Dept. of Defense, Navy, Office of Naval Research, 800 N. Quincy St., Arlington, VA 22217. Contract DN923411
Period:	6/69 - Cont.
Funds:	$25,000 FY 79

Bioindicators, Microorganisms, Bacteria, Biological effects, Sublethal effects, Marine environment, *Chemotaxis

Laboratory and field studies are being conducted to determine the effect of sublethal concentrations of pollutants on marine microbial processes. Inhibition of bacterial chemotaxis by chloramines, the relationship between chemoreceptor blockage by pollutants and retardation of organic matter decomposition, and pollution-induced microbial diseases of coral are being investigated.

[from SSIE No. GQN-923411-9]

79B-R013
WATER QUALITY INSTRUMENT DEVELOPMENT

Principal Investigator:	Pijanowski, B.
Performing Organization:	US Dept. of Commerce, NOAA, Office of Ocean Engineering, Manned Undersea Science & Technology Office, Rockville, MD 20852
Supporting Organization:	Same
Period:	1978 - N/A
Funds:	$53,000 FY 78

Monitoring, Detection, Equipment, Analytical techniques, Surveillance

This project is developing improved instrumentation for long-term monitoring of dissolved oxygen, automated in-situ measurement of trace metals in marine waters, and sensors for detection of oil presence in surface waters.

[from SSIE No. ZPB-1685]

79B-R014 (R-069-78)
OIL IN WATER TECHNOLOGY

Principal Investigator:	Venezky, D.L.
Performing Organization:	US Dept. of Defense, Navy, Naval Research Lab., Washington, DC, 20375
Supporting Organization:	US Dept. of Defense, Navy, Naval Supply Systems Command, Washington, DC 20376
Period:	2/75 - Cont.
Funds:	N/A

Hydrocarbons, Contaminants, Detection, Source identification, Analytical techniques

In order to maintain naval expertise in the area of oil-in-water detection and assaying, the Naval Research Laboratory has participated in reviewing and evaluating test methods which are submitted or proposed to the American Society for Testing and Materials Committee D-19 and its task group on oil/grease in water. Oil and grease components are being identified and methods developed to distinguish between soluble non-ionic hydrocarbons and soluble ionic organic constituents in water.

[from SSIE No. ZQN-580168-3]

2. Remote Sensing

79B-R015
RADAR DISCRIMINATION OF OIL SPILLS

Principal Investigator:	Moore, R.K., and Y.S. Yu.
Performing Organization:	Remote Sensing Laboratory, University of Kansas Center for Research, Inc., 2291 Irving Hill Rd., Lawrence, KS 66045
Supporting Agency:	National Aeronautics & Space Admin., Langley Research Center, Hampton, VA. Grant NSG 1554
Period:	7/78 - 12/79
Funds:	$38,713

Remote sensing, Oil spills, Monitoring, Detection, *Radar

Project objectives are to 1) experimentally ascertain the contrast between oil-covered and oil-free water with radar over a frequency range of 8-18 GHz and an angle range of 20°-70° from vertical, 2) determine the resolution required for oil-spill monitoring by use of degraded synthetic aperture radar images and simulation, and 3) formulate recommendations on spaceborne radar monitoring systems for oil spills.

Status: Preliminary wind tank measurements have been made and simulation studies for resolution are in progress. An orbit study for the oil spill radar has been completed. The system design will be based on similar work done for ice monitoring.

Information Source: R.K. Moore, address above.

79B-R016

MORPHOLOGY OF BEAUFORT, CHUKCHI, AND BERING SEA NEAR SHORE ICE CONDITION BY MEANS OF SATELLITE AND AERIAL REMOTE SENSING

Principal Investigator:	Stringer, W.J.
Performing Organization:	University of Alaska, Geophysical Inst., Fairbanks, AK 99701
Supporting Organization:	US Dept. of the Interior, BLM, 19th & C Sts. N.W., Washington, DC 20240
Period:	1975 - 1978
Funds:	$49,870 FY 78

Remote sensing, Ice, Behavior, Baseline studies, Design-engineering, Spill response, Development, Beaufort Sea, Alaska

This study is developing a morphology of nearshore ice conditions along ice-frequented portions of the Alaska coast. Sea-ice behavior data derived will provide a degree of predictability in terms of offshore sea-ice hazards to oil and gas development, thus allowing for development of various design and construction criteria, oil spill management criteria and guidelines, and spill cleanup techniques.

[from SSIE No. GUK-212]

3. Sampling and Analysis

79B-R017
OIL SPILL AGING TESTS

Principal Investigator: Hovis, W.A., and J. Knoll
Performing Organization: US Dept. of Commerce, NOAA, National Environment Satellite Experiment Lab., 14th St. at Constitution Ave. N.W., Washington, DC 20233
Supporting Organization: Same
Period: 3/78 - 3/79
Funds: $37,000 FY 78

Oil spills, Crude oil, Analytical techniques, Remote sensing, Detection, Surveillance, Monitoring, Weathering, *Aging

The optical spectra of various crude oils as a function of aging will be determined under simulated ocean conditions. The results will be used in analysis of remotely sensed data from spacecraft for oil spill location and monitoring. Optical signatures will be collected with a scanning monochromator and a radiometer. Data will be collected for one week as the oil samples age. Measured reflectances will be used to determine how to best process data from aircraft or satellite spill observation.

[from SSIE No. ZBP-1647]

79B-R018
CHEMICAL ANALYTICAL SCAN OF PUGET SOUND SEDIMENTS

Principal Investigator: Macleod, W.
Performing Organization: US Dept. of Commerce, NOAA, National Marine Fish Northwest & Alaska Fisheries Center, 2725 Montlake Blvd. E., Seattle, WA 98112
Supporting Organization: US Dept. of Commerce, NOAA, Environmental Research Labs., Marine Ecosystems Analysis Programs Office, 325 Broadway, E. University Campus Research, Boulder, CO 80302
Period: 5/78 1/80
Funds: $24,500 FY 78

Contaminants, Detection, Sediments, Chemical analysis, Aromatic hydrocarbons, Puget Sound, Washington

Selected sites in Puget Sound where suspected water and sediment quality problems exist will be examined for contaminants of special concern to the marine ecosystem. These include contaminants known to be toxic, persistent, bioaccumulative and/or present in high enough concentrations to be harmful to living components of the ecosystem; 20 metals and a minimum of 45 compounds including saturated hydrocarbons, aromatic hydrocarbons, and synthetic industrial organic compounds will be analyzed in sediment samples.

[from SSIE No. ZBP-1626]

79B-R019
PETROLEUM HYDROCARBON ANALYSIS OF MARINE SYSTEMS
Principal Investigator: Rogerson, P., J. Lake, and C. Norwood
Performing Organization: US Environmental Protection Agency, Office of R&D, Environmental Research Lab., S. Ferry Rd., Narragansett, RI 02882
Supporting Organization: Same
Period: 1/75 - 12/81
Funds: $128,000 FY 78

Analytical techniques, Hydrocarbons, Sediments, GC/MS, Chromatography, Marine environment

Techniques to measure various classes of petroleum hydrocarbons in marine systems are being developed and applied. Tissues and sediments are collected and extracted with organic solvents. Sample cleanup and fractionation is by column chromatography with analysis by capillary column gas chromatography and GC/MS.

[from SSIE No. ZMA-1665]

4. Source Identification

79B-R020 (R-5-76)
OIL IDENTIFICATION
Principal Investigator: Coleman, H.J.
Performing Organization: US Department of Energy, Bartlesville Energy Research Center, P.O. Box 1398, Bartlesville, OK 74003
Supporting Organization: US Department of Energy, Office of Fossil Energy, Washington, DC
Period: 7/71 - 10/81
Funds: N/A

Source identification, Crude oil, Hydrocarbons, Analytical techniques, Spectrometry, Chromatography, *IR

Objectives of this project are to determine, measure and computerize distinctive properties of crude oil and crude oil residues for improved oil fingerprinting and identification.

[from SSIE No. DS-324]

79B-R021

AN INVESTIGATION INTO HAZARDOUS PHENOLIC COMPOUNDS FROM PETROLEUM SOURCE AND URBAN RUNOFF

Principal Investigator:	Faust, S.D., and W.H. Clement
Performing Organization:	Rutgers the State University of New Jersey, Graduate School, Old Queens Bldg., New Brunswick, NJ 08903
Supporting Organization:	US Dept. of the Interior, Office of Water Research and Technology, 18th and C Sts. N.W., Washington, DC 20240
Period:	10/78 - 1/81
Funds:	$24,756 FY 79

Source identification, Estuaries, Sediments, Oil discharges, Delaware, *Phenolic compounds, *Urban runoff

This project will identify the specific phenolic compounds in the Delaware estuary waters and sediments in order to establish the extent to which urban runoff, petroleum and other sources contribute to their occurrence. Identification of specific phenols should lead to their ultimate control and elimination.

[from SSIE No. GUY-1427]

B. OIL POLLUTION PREVENTION AND CONTROL

1. Containment

79B-R022
PERFORMANCE TESTING--INLAND/HARBOR EQUIPMENT PHASE II

Principal Investigator:	Ackerman, R.
Performing Organization:	Mason & Hanger-Silas Mason Co., Inc., PO Box 117, Leonardo, NJ 07737
Supporting Organization:	US Environmental Protection Agency, Office of R&D, Industrial Environmental Research Lab., 555 Ridge Ave., Cincinnati, OH 45268. Contract 68-03-2642
Period:	1/78 - 12/78
Funds:	$40,000 FY 78

Spill containment, Booms, Sorbents, EPA, *Performance testing, *OHMSETT facility

The project objectives were performance evaluations of selected sorbent booms and a spill gellation process. Performance tests were conducted at EPA's OHMSETT facility.

[from SSIE No. GMA-5453]

Status: The project has been completed.

Reports and Publications

PERFORMANCE TESTING OF SELECTED SORBENT BOOMS
Smith, G.F. 1978.
Report EPA-600/7-78-219. 35 p.

DEPLOYMENT OF CONFIGURATION TESTING FOR IMPROVED OIL CONTAINMENT BY SELECTED SORBENT BOOMS
Smith, G.F. 1979.
Cincinnati, Ohio, US Environmental Protection Agency, 1979. In press.

Information Source: G.F. Smith, Mason & Hanger-Silas Mason Co., Inc., P. O. Box 117, Leonardo, NJ 07737.

79B-R023
PERFORMANCE TESTING OF AIR JET BOOM
Principal Investigator: Ackerman, R.
Performing Organization: Mason & Hanger-Silas Mason Co., Inc., PO Box 117, Leonardo, NJ 07737
Supporting Organization: US Environmental Protection Agency, Office of R&D, Industrial Environmental Research Lab., 5555 Ridge Ave., Cincinnati, OH 45268. Contract 68-03-2642.
Period: 8/77 - 12/80
Funds: $40,000 FY 78

Spill containment, Booms, Equipment, EPA, *Performance testing, *Air jet boom, *OHMSETT facility

A performance evaluation of a full-size air jet boom was made at EPA's OHMSETT test facility.

[from SSIE No. 5454]

Status: The project has been completed and a report is being prepared.

Reports and Publications

DESIGN, FABRICATION AND TESTING OF THE AIR JET OIL BOOM
Cohen, S.H. (In preparation).
Cincinnati, Ohio, US Environmental Protection Agency, 1978.

Information Source: G.F. Smith, Mason & Hanger-Silas Mason Co., Inc., PO Box 117, Leonardo, NJ 07737.

2. Cleanup and Removal

79B-R024
FIELD TESTS OF OIL SPILL CLEANUP EQUIPMENT
Principal Investigator: Maxwell, R.D., J.S. Farlow, J. Getman, and J.E. Wilson
Performing Organization: US Environmental Protection Agency
Supporting Organization: US Dept. of Energy, Division of Environmental Control Technology, Washington, DC 20545. Contract ERDA-EE-77-A-28-3235
Period: 1977
Funds: N/A

Spill cleanup, Skimmers, Booms, Equipment, DOE, EPA, *Performance testing, *OHMSETT facility

"The objective of this study is to achieve participation with other government agencies as a Joint Committee to acquire objective knowledge of oil spill control devices available." Four devices were selected for testing and evaluation at EPA's OHMSETT facility.

Status: Testing of three of the four cleanup devices was completed and the fourth was to have been tested in 1978. A final report is in preparation.

[from Division of Environmental Control Technology Program-1977. US Department of Energy, 1978. Report DOE/EV-0015. p. 40-41]

79B-R025 (R-141-78)
ASSESSMENT OF PRACTICALITY OF OIL SPILL TREATMENT

Principal Investigator:	Wilson, M.P.
Performing Organization:	University of Rhode Island, School of Engineering, Administration Bldg., Kingston, RI 02881
Supporting Organization:	US Dept. of Energy, Division of Environmental Control Technology, Washington, DC 20545. Contract EY-76-S-02-4047
Period:	6/76 - 6/79
Funds:	$400,000 FY 77

Dispersants, Oil spills, Spill cleanup

Mathematical, laboratory-scale, meso-scale, and in situ experiments will be conducted to determine the practicability and feasibility of treating oil spills with dispersants.

[from SSIE No. DN-1225]

Status: The literature search and background study have been completed, and the meso-scale tests were to have been completed by June 1978.

Reports and Publications

ASSESSMENT OF TREATED VS UNTREATED OIL SPILLS
Wilson, M.P. 1978.
Report HCP/W4047-02. Interim report. 410 p.

THE SPREADING, RETENTION AND CLEAN-UP OF OIL SPILLS
Wilson, M.P. 1978.
Report HCP/P2756-01. 126 p.

Information Source: J.M. Cece, US Department of Energy, Division of Environmental Control Technology, Washington, DC 20545.

3. Personnel Training

79B-R026
USER'S MANUAL FOR OIL SPILL CLEANUP PRIORITIES
Principal Investigator: Byroade, J.D.
Performing Organization: Versar, Inc., 6621 Electronic Dr., Springfield, VA 22151
Supporting Organization: Rockwell International, Environmental Monitoring & Services Center, 2421 W. Hillcrest Dr., Newbury Park, CA 91320. Contract N8520034SP
Period: 9/78 - 8/79
Funds: $97,861

Personnel training, Manuals, Spill response, Spill cleanup

The project objective is the development of a field manual for use by federally designated on-scene coordinators to assist them in establishing protection and cleanup priorities during all phases of oil spill response.

Status: A Program Plan was completed in November 1978 and a draft manual is to have been completed July 1, 1979.

Information Source: J.D. Byroade, address above.

79B-R027
NATIONAL OIL SPILL CONTROL SCHOOL
Principal Investigator: Gilchrist, R.
Performing Organization: Texas A&I University, Corpus Christi, School of Science & Technology, 6300 Ocean Dr., Corpus Christi, TX 78411
Supporting Organization: US Dept. of Energy, Division of Environmental Control Technology, Washington, DC 20545
Period: 4/77 - 4/78
Funds: N/A

Personnel training, Contingency planning, Spill response, Spill cleanup, Pollution prevention, Pollution control

"The curriculum developed during Phase I emphasizes the current 'state-of-the art' of oil spill control as practiced throughout the nation and for the contingency planning necessary to improve the nation's readiness to react to oil spills. The training program provided will furnish a manpower base to local communities to respond to emergencies caused by oil spills and to develop contingency plans for dealing with problems of oil spills. The proposed schedule for the academic year 1977-78 will consist of five practice sessions with selected students to test the curriculum plus fourteen, five-day class sessions."

[from SSIE No. DN-963]

4. Contingency Planning and Spill Response

79B-R028
SPILLED OIL RESEARCH TEAM
Principal Investigator: Kennedy, D.
Performing Organization: US Dept. of Commerce, NOAA, Environmental Research Labs., Boulder, CO 80302
Supporting Organization: US Dept. of the Interior, BLM, 19th and C Sts. N.W., Washington, DC 20240
Period: 1978 - N/A
Funds: $150,000 FY 78

Spill response, Information systems, Behavior, Spill trajectories, Physical effects, Fate, Chemical effects, Chemical analysis, Biological effects, *Scientific response

Topics of investigation include trajectories, physical processes, chemical fate studies, and coordination of biological studies with chemical analyses

[from SSIE No. GUK-235]

5. General Prevention and Control Measures

79B-R029 (R-086-78)
ENVIRONMENTAL SUPPORT TECHNOLOGY: INTERFACE CHEMISTRY IN THE MARINE ENVIRONMENT AND ITS EFFECT ON NAVAL OPERATIONS
Principal Investigator: Garrett, W.D., and W.R. Barger
Performing Organization: US Dept. of Defense, Navy, Naval Research Lab., Washington, DC 20375
Supporting Organization: Same
Period: 11/69 - Cont.
Funds: N/A

Sea surface, USN, Ships, Pollution control, *Air-sea interface

Objectives of the project are to enhance naval operations by chemical modification of the air-sea interface, to evaluate the role of natural, artificial and pollutant surface films on air-sea interactions, and to determine the influence of organic films on atmospheric processes. Based on laboratory, test tank and field experiments, surface-active chemicals have been selected for use as sea markers to control oil pollution at naval ship installations, and for other purposes.

[from SSIE No. ZQN-20190-5]

C. ENVIRONMENTAL IMPACTS OF OIL POLLUTION

1. Biological Aspects

79B-R030 (R-086-77)
LONG-TERM EFFECTS OF OIL ON MARINE COMMUNTIES AND ASSOCIATED ORGANISMS

Principal Investigator:	Anderson, J.W., R.M. Bean, and R.G. Riley
Performing Organization:	Battelle Memorial Inst., Rte. 5 Box 1000, Sequim, WA 98382
Supporting Organization:	US Environmental Protection Agency, Office of Energy, Minerals & Industry, 401 M St., Washington, DC 20460. Contract TDO 751 77BCF-EHA540-M2
Period:	1974 - 1979
Funds:	$190,000 FY 77

Crude oil, Hydrocarbons, Concentrations, Biological effects, Chronic effects, Marine organisms, Uptake, Release, Growth, Sediments, Ecosystems, Pacific coast

Laboratory and field studies are being conducted to assess the effects of Prudhoe Bay crude oil extracts on and define concentrations harmful to organisms and communities from northwest US coastal ecosystems exposed to oiled water or sediments for periods of months.

[from SSIE No. GMA-5360]

Status: Project milestones for 1979 include determination of the relationship between cumulative effects and tissue content, and determination of the effects of oiled sediments on tissue content and growth of clams after long-term field exposure.

Reports and Publications

RESPONSES TO SUBLETHAL LEVELS OF PETROLEUM HYDROCARBONS: ARE THEY SENSITIVE INDICATORS AND DO THEY CORRELATE WITH TISSUE CONTAMINATION?
Anderson, J.W. 1977.
Fate and Effects of Petroleum Hydrocarbons in Marine Ecosystems and Organisms. D.A. Wolfe (ed.). New York, Pergamon Press, 1977. p. 95-114.

PHYSIOLOGICAL STRESSES AND RESPONSE IN CHRONICALLY OILED ORGANISMS
Anderson, J.W., and D.C. Malins. 1978.
Journal of the Fisheries Research Board of Canada 35(5):679-680.

BIOAVAILABILITY OF SEDIMENT-SORBED NAPHTHALENES TO THE SIPUNCULID WORM, PHASCOLOSOMA AGASSIZII
Anderson, J.W., L.J. Moore, J.W. Blaylock, D.L. Woodruff, and S.L. Kiesser. 1977.
Fate and Effects of Petroleum Hydrocarbons in Marine Ecosystems and Organisms. D.A. Wolfe (ed.). New York, Pergamon Press, 1977. p. 276-285.

RECRUITMENT OF BENTHIC ANIMALS AS A FUNCTION OF PETROLEUM HYDROCARBON CONCENTRATIONS IN THE SEDIMENT
Anderson, J.W., R.G. Riley, and R.M. Bean. 1978.
Journal of the Fisheries Research Board of Canada 35(5):776-790.

APPLICATION OF TRACE ANALYTICAL TECHNIQUES TO A STUDY OF HYDROCARBON COMPOSITION UPON DISPERSION OF PETROLEUM IN A FLOWING SEAWATER SYSTEM
Bean, R.M., J.W. Blaylock, and R.G. Riley. 1978.
Paper presented at the Symposium on Analytical Chemistry of Petroleum Hydrocarbons in the Marine/Aquatic Environment, Miami Beach, 10-15 September 1978.

FATE OF POLYCYCLIC AROMATIC HYDROCARBONS IN CONTROLLED ECOSYSTEM ENCLOSURES
Lee, R.F., W.S. Gardner, J.W. Anderson, J.W. Blaylock, and J. Barwell-Clarke. 1978.
Environmental Science & Technology 12(7):832-838.

UPTAKE OF HYDROCARBONS FROM MARINE SEDIMENTS CONTAMINATED WITH PRUDHOE BAY CRUDE OIL: INFLUENCE OF FEEDING TYPE OF TEST SPECIES AND AVAILABILITY OF POLYCYCLIC AROMATIC HYDROCARBONS
Roesijadi, G., J.W. Anderson, and J.W. Blaylock. 1978.
Journal of the Fisheries Research Board of Canada 35(5):608-614.

ESTIMATION OF EFFECTS FROM OIL ON INTERTIDAL POPULATIONS: EXPERIMENTAL PERTERBATIONS VERSUS NATURAL VARIATION
Vanderhorst, J.R., J.W. Anderson, P. Wilkinson, and D.L. Woodruff. 1978.
Conference on Assessment of Ecological Impacts of Oil Spills, Keystone, Colorado 14-17 June 1978. American Institute of Biological Sciences, 1978. p. 807-820.

Information Source: J.W. Anderson, address above.

79B-R031 (R-041-78)
EFFECTS OF DRILLING FLUIDS AND OIL IN CORALS OCCUPYING HARD-BANK COMMUNITIES

Principal Investigator: Bright, T.J., and J.H. Thompson
Performing Organization: Texas A&M University, School of Geosciences, College Station, TX 77843
Supporting Organization: US Environmental Protection Agency, Office of Research & Development, Gulf Breeze Environmental Research Lab., Sabine Island, Gulf Breeze, FL 32561. Grant R-805441
Period: 7/77 - 6/79
Funds: $1,500 FY 78

Oil shale, Corals, Biological effects, Behavior, Carcinogens, Metabolism, Gulf of Mexico, *Drilling fluids

The behavioral and physiological reactions of scleractinian corals indigenous to hard bank communities in the Gulf of Mexico will be determined in response to chronic low levels of drilling fluid components and shale oil products. Time-lapse-macrophotographic and respirometric techniques will be used to measure the response parameters. Exposure to contaminants will be in "flow through" aquaria on board a platform 12 mi offshore of Panama City.

[from SSIE No. GMA-5499]

79B-R032
HISTOPATHOLOGY OF MARINE FISH, SOUTH TEXAS OCS MONITORING AND ENVIRONMENTAL STUDIES

Principal Investigator: Haensly, W.E.
Performing Organization: Texas A&M University, School of Veterinary Medicine, College Station, TX 77843
Supporting Organization: Same
Period: 7/76 - 11/78
Funds: N/A

Fish, Biological effects, Chronic effects, Toxicity, Crude oil, OCS, Texas, *Histopathology, *Sciaenidae

Two species of marine fish in the Gulf of Mexico were investigated for microscopic anatomy and histopathology. The histopathologic effects of exposure to water soluble fractions of southern Louisiana crude oil by fish of the drum family (Sciaenidae) was to be determined. Tissues of fish taken by trawl were fixed in formaldehyde and Helly solution, imbedded in paraffin, sectioned and stained with hematoxilyn and eosin. Organ samples were processed immediately and subjected to routine histological procedures.

[from SSIE No. GY-74987]

79B-R033 (R-097-078)
ECOLOGICAL EFFECTS OF OIL ON SMALL PONDS IN ARCTIC ALASKA
Principal Investigator: Hobbie, J.E.
Performing Organization: Marine Biological Lab., Woods Hole, MA 02543
Supporting Organization: US Dept. of Energy, 17th & Pennsylvania Ave. N.W., Washington, DC 20006. Contract EY-76-S-02-2989
Period: 7/75 - 9/78
Funds: $55,000 FY 78

Oil spills, Arctic, Ecosystems, Freshwater, Biological effects, Algae, Zooplankton, Biomass, Reproduction, Alaska, Uptake, *Tundra ponds

Short- and long-term effects of experimental crude oil spills in small tundra ponds are being evaluated. The study includes algae and animal species identification and production measurements (C^{14} uptake and zooplankton biomass changes).

Status: The field work has been completed, and a report is being prepared. Zooplankton and reproductive stages of the midge larvae have been identified as two sensitive components of the ecosystem.

[from SSIE No. DS-389]

79B-R034
EFFECTS OF OILING ON TEMPERATURE REGULATION IN SEA OTTERS
Principal Investigator: Kooyman, G.L., and W.F. Garey
Performing Organization: University of California, Scripps Institute of Oceanography, PO Box 1529, La Jolla, CA 92038
Supporting Organization: US Department of the Interior, BLM, 19th and C Sts. N.W., Washington, DC 20240
Period: 1977 - N/A
Funds: $62,773 FY 78

Animals, Marine mammals, Habitats, Oil spills, Biological effects, Environmental effects, Marine environment, *Sea otters

The energy requirements and sea behavior of oiled and normal otters and procedures for rehabilitation will be studied. The resulting data base will be used to assess the effect of oil contamination or other activities which may alter the otter's food sources.

[from SSIE No. GUK-233]

79B-R035 (R-055-78)
MARINE PROTOZOAN MICROSOMAL ACTIVATION OF OIL POLLUTANTS TO MUTAGENS

Principal Investigator: Lindmark, D.G.
Performing Organization: Rockefeller University, Biochemical Cytology Lab., 66th & York Ave., New York, NY 10021
Supporting Organization: US Environmental Protection Agency, Office of R&D, Gulf Breeze Environmental Research Lab., Sabine Island, Gulf Breeze, FL 32561. Grant R805364-02
Period: 9/77 - 8/79
Funds: $50,000 FY 78

Carcinogens, Hydrocarbons, Microorganisms, Algae, Metabolism, *Protozoa, *Microsomes, *Mutagens

Isolation and characterization of microsomes from marine protozoa and algae will be carried out in the laboratory. The purpose of the research is to predict the fate of selected compounds with mutagenic and pre-mutagenic activities.

[from SSIE No. GMA-5497]

79B-R036
SUBLETHAL EFFECTS OF PETROLEUM HYDROCARBONS AND TRACE METALS, INCLUDING BIOTRANSFORMATIONS

Principal Investigator: Malins, D.C., E.H. Gruger, H.O. Hodgins, N.L. Karrick, and D.D. Weber
Performing Organization: US Dept. of Commerce, Environmental Conservation Div., 2725 Montlake Blvd. E., Seattle, WA 98112
Supporting Organization: US Dept. of the Interior, BLM, 19th & C Sts. N.W., Washington, DC 20240. Contract R7120819
Period: 10/78 - 9/79
Funds: $268,000 FY 79

Hydrocarbons, Biological effects, Sublethal effects, Marine organisms, Fish, Uptake, Metabolism, Toxicity, Food web, Chemical analysis, Dispersants, Baseline studies, Alaska, *Pathology

Objectives embrace four general areas: 1) Identification of the intermediary metabolites of petroleum constituents and determination of their retention in marine organisms with their possible transport in food chains; 2) determination of disease resistance of oil-exposed animals inoculated with potential pathogens isolated from diseased individuals collected in Alaskan waters; 3) determination of contaminant concentrations, localization, turnover rates, and alterations of cellular structure in key organs of selected species from selected exposure conditions; and 4) determination of the effects of chemical dispersants on marine animals. The results will be used to evaluate the biological impacts of offshore oil development in Alaska.

[from SSIE No. GUK-231]

Status: Behavioral, chemical, morphological, pathological and physiological studies have been completed on a number of fish species. Some aspects of the studies are continuing.

Reports and Publications

NAPHTHALENE METABOLITES IN BRAIN AND OTHER ORGANS OF RAINBOW TROUT (SALMON GAIRDNERI)
Collier, T.K., D.W. Brown, and D.C. Malins. 1979.
Federation Proceedings 38(3):685. (Abstract #2256)

METABOLIC FATE OF AROMATIC HYDROCARBONS IN AQUATIC ORGANISMS: ANALYSIS BY THIN-LAYER CHROMATOGRAPHY AND HIGH-PRESSURE LIQUID CHROMATOGRAPHY
Malins, D.C., T.K. Collier, L.C. Thomas, and W.T. Roubal. 1979.
International Journal of Environmental Analytical Chemistry 6(1):55-66.

TUMORS AND MICROBIAL DISEASES OF MARINE FISHES IN ALASKAN WATERS
McCain, B.B., W.D. Gronlund, M.S. Meyers, and S.R. Wellings. 1979.
Journal of Fish Diseases 2:111-130.

OBSERVATION ON THE ULTRASTRUCTURE ORIGINS AND LIFE HISTORY OF LARGE CELLS ASSOCIATED WITH PUTATIVE NEOPLASTIC DISORDERS OF MUSSELS, MYTILUS EDULIS, FROM YAQUINA, OREGON
Mix, M., J. Hawkes, and A. Sparkes. 1979.
Journal of Invertebrate Pathology. In press.

THE ACCUMULATION OF LOW MOLECULAR WEIGHT AROMATIC HYDROCARBONS OF CRUDE OIL BY COHO SALMON (ONCORHYNCHUS KISUTCH) AND STARRY FLOUNDER (PLATICHTHYS STELLATUS)
Roubal, W.T., S.I. Stranahan, and D.C. Malins. 1978.
Archives of Environmental Contamination and Toxicology 7(2):237-249.

THE COMPARATIVE ULTRASTRUCTURE OF THE EGG MEMBRANE AND ASSOCIATED PORE STRUCTURES IN THE STARRY FLOUNDER, PLATCHITHYS STELLATUS (PALLAS) AND PINK SALMON, ONCORHYNCHUS GORBUSCHA (WALBAUM)
Stehr, C., and J.W. Hawkes. 1979.
Cell and Tissue Research. In press.

UPTAKE AND RELEASE OF NAPHTHALENE AND ITS METABOLITES IN SKIN AND EPIDERMAL MUCUS OF SALMONOIDS
Varanasi, U., M.I. Uhler, and S.I. Stranahan. 1978.
Toxicology and Applied Pharmacology 44:277-289.

INFLUENCE OF ENVIRONMENTAL TEMPERATURE ON METABOLISM OF DIETARY NAPHTHALENE IN STARRY FLOUNDER
Varanasi, U., D.J. Gmur, and P.A. Treseler. 1979.
Federation Proceedings 38(3):1149. (Abstract #4867)

Information Source: D.C. Malins, address above.

79B-R037
BEHAVIOR OF FISHES UNDER ENVIRONMENTAL STRESS
Principal Investigator: Olla, B.
Performing Organization: US Dept. of Commerce, Sandy Hook Lab., PO Box 428, Highlands, NJ 07732
Supporting Organization: US Dept. of Commerce, NOAA, National Marine Fisheries Service, Washington, DC
Period: 1978 - N/A
Funds: $118,000 FY 78

Fish, Marine environment, Behavior, Biological effects, Environmental effects, Reproduction, Growth, Toxicity, Monitoring

The title project is investigating the environmental stress from such things as temperature and hydrocarbons on the behavior of marine fish, shellfish, and key food chain organisms. Responses by pelagic fish to stress are being determined to establish behavior responses in relation to survival, recruitment, growth, and reproduction, and to develop behavioral measures for long-term monitoring.

[from SSIE No. ZBP-1459]

79B-R038 (R-109-78)
FATE AND EFFECTS OF PETROLEUM HYDROCARBONS AND SELECTED TOXIC METALS IN SELECTED MARINE ECOSYSTEMS AND ORGANISMS
Principal Investigator: Wolfe, D.A.
Performing Organization: US Dept. of Commerce, Environmental Research Labs, Boulder, CO 80302
Supporting Organziation: US Environmental Protection Agency, Office of Energy, Minerals, & Industry, 401 M St. S.W., Washington, DC 20460
Period: 10/75 - 9/80
Funds: $425,000 FY 78

Hydrocarbons, Marine organisms, Biological effects, Toxicity, Ecosystems, Fate, Analytical techniques, Environmental effects, Subarctic regions, NOAA

The project includes four tasks with the following objectives: Establish a NOAA analytical capability for petroleum hydrocarbons and toxic metals in the marine environment (for petroleum hydrocarbons and toxic metals in the marine environment) for purposes of standardizing analytical techniques and providing intercalibration services; identify the current status of knowledge and information gaps on the fate and effects of petroleum hydrocarbons in marine ecosystems; select and conduct specific laboratory experiments on fate and effects of metals and hydrocarbons; conduct controlled experimental ecosystem research to test the ability to predict ecological and biological impacts of petroleum in subarctic ecosystems.

CURRENT RESEARCH PROJECTS

Status: A report on design and feasibility of field experiments has been completed. Studies currently in progress include the following: 1) Interacting effects of hydrocarbons and other marine pollutants on marine organisms; 2) petroleum effects on metals in sediments; 3) effects of petroleum on crab chemoreception; 4) petroleum effects on seabird reproduction; 5) adaptation of seep organisms to petroleum exposure; 6) pollutant effects on flat fish from contaminated and uncontaminated estuaries.

[from SSIE No. GMA-5230]

Reports and Publications

THE MORPHOLOGICAL EFFECTS OF PETROLEUM AND CHLOROBIPHENYLS ON FISH TISSUES
Hawkes, J.W. 1977.
Symposium on Environmental Pollutants, Storrs, Connecticut, 1-3 June 1977. National Academy of Science, in press.

INTERTIDAL SEDIMENT HYDROCARBON LEVELS AT TWO SITES ON THE STRAIT OF JUAN DE FUCA
McLeod, W.D., Jr., D.W. Brown, R.G. Jenkins, and L.S. Ramos. 1977.
Fate and Effects of Petroleum Hydrocarbons in Marine Ecosystems and Organisms. D.A. Wolfe (ed.). New York, Pergamon Press, 1977. p. 385-396. Proceedings of a Symposium, Seattle, Washington, 10-12 November 1976.

A PILOT STUDY ON THE DESIGN OF A PETROLEUM HYDROCARBON BASELINE INVESTIGATION FOR NORTHERN PUGET SOUND AND STRAIT OF JUAN DE FUCA
MacLeod, W.D., Jr., D.W. Brown, R.G. Jenkins, L.S. Ramos, and V.D. Henry. 1976.
NOAA Technical Memorandum ERL MESA-8. 59 p.

FATE AND EFFECTS OF PETROLEUM HYDROCARBONS IN MARINE ORGANISMS AND ECOSYSTEMS
Wolfe, D.A. (ed.). 1977.
New York, Pergamon Press, 1977. 478 p. Proceedings of a Symposium, Seattle, Washington, 10-12 November 1976.

Information Source: D.A. Wolfe, address above.

2. Baseline and Environmental Impact Studies

79B-R039
GEOLOGIC PROCESSES AND HAZARDS OF THE BEAUFORT SEA SHELF AND COASTAL REGIONS

Principal Investigator:	Barnes, P., E. Reimnitz, and D. Drake
Performing Organization:	US Department of the Interior, Geological Survey, 345 Middlefield Rd., Menlo Park, CA 94025
Supporting Organization:	US Dept. of the Interior, BLM, 19th and C Sts. N.W., Washington, DC 20240
Period:	1978 - N/A
Funds:	$80,800 FY 78

Baseline studies, OCS, Coasts, Sediments, Oil spills, Fate, Predictions, Beaufort Sea, Arctic

Geologic processes in areas with a potential for future resource exploitation are being examined to establish a data base and to guide development with respect to hazards. Ice gouging, striking anamolies in seismic records, shelf sediments, coastline stability, and configuration of the undersurface of first and multi-year ice constitute major facets of the investigation. The latter is important in the evaluation of quantities of oil which could be trapped and spread as well as being a substrate for an inverted benthic community of high primary productivity.

[from SSIE No. GBP-3658]

79B-R040
OILSPILL RISK ANALYSIS

Principal Investigator:	Lanfear, K.J., A. Nakassis, W. Samuels, and C. Schoen
Performing Organization:	US Dept. of the Interior, Geological Survey, Environmental Impacts Analysis Program, Research, and Training Branch, 12201 Sunrise Valley Dr., Reston, VA 22092
Supporting Organization:	Same
Period:	7/67 - Cont.
Funds:	$311,024 FY 77

Risk analysis, Oil spills, Environmental effects, OCS, Offshore development, Models, Atlantic coast

Oil spill risk analyses are being conducted to determine the relative environmental hazards of developing oil resources in different regions of the US OCS. The studies analyze the probability of spill occurrences, likely trajectories, and locations in space and time of such targets as vulnerable recreational and biological resources. The results will yield estimates of the overall oil spill risks associated with the development of proposed lease areas.

[from SSIE No. DO-223]

Status: Analyses have been conducted for lease areas in the North, Mid-, and South Atlantic Oceans, the eastern Gulf of Mexico, the Southern California Bight, and the western and northern Gulf of Alaska.

Reports and Publications

AN INTRODUCTION TO THE OILSPILL RISK ANALYSIS MODEL
Lanfear, K.J., R.A. Smith, and J.R. Slack. 1979.
Offshore Technology Conference, Houston, Texas, 30 April-3 May 1979.

AN OILSPILL RISK ANALYSIS FOR THE SOUTH ATLANTIC OUTER CONTINENTAL SHELF LEASE AREA
Slack, J.R., and R.A. Smith. 1976.
US Geological Survey Open-File Report 76-653. 54 p.

AN OILSPILL RISK ANALYSIS FOR THE WESTERN GULF OF ALASKA (KODIAK ISLAND) OUTER CONTINENTAL SHELF LEASE AREA
Slack, J.R., R. A. Smith, and T. Wyant. 1977.
US Geological Survey Open-File Report 77-212. 57 p.

AN OILSPILL RISK ANALYSIS FOR THE MID-ATLANTIC (PROPOSED SALE 49) OUTER CONTINENTAL SHELF LEASE AREA
Slack, J.R., and T. Wyant. 1978.
US Geological Survey Water-Resources Investigations, 78-56. 79 p. (NTIS)

AN OILSPILL RISK ANALYSIS FOR THE SOUTHERN CALIFORNIA (PROPOSED SALE 48) OUTER CONTINENTAL SHELF LEASE AREA
Slack, J.R., T. Wyant, and K.J. Lanfear. 1978.
US Geological Survey Water-Resources Investigations, 78-80. 101 p. (NTIS)

OILSPILL RISK MINIMIZATION THROUGH OPTIMAL TRACT SELECTION
Smith, R.A., K.J. Lanfear, and I.C. James II. 1979.
Paper presented at the conference on Physical Behavior of Oil in the Marine Environment, Princeton University, 8-9 May 1979.
Sponsored by the National Weather Service.

AN OILSPILL RISK ANALYSIS FOR THE MID-ATLANTIC OUTER CONTINENTAL SHELF LEASE AREA
Smith, R.A., J.R. Slack, and R.K. Davis. 1976.
US Geological Survey Open-File Report 76-451. 24 p.

AN OILSPILL RISK ANALYSIS FOR THE NORTH ATLANTIC OUTER CONTINENTAL SHELF LEASE AREA
Smith, R.A., J.R. Slack, and R.K. Davis. 1976.
US Geological Survey Open-File Report 76-620. 50 p.

AN OILSPILL RISK ANALYSIS FOR THE EASTERN GULF OF MEXICO (PROPOSED SALE 65) OUTER CONTINENTAL SHELF LEASE AREA
Wyant, T., and J.R. Slack. 1978.
US Geological Survey Open-File Report 78-132. 72 p.

Information Source: K.J. Lanfear, address above.

79B-R041
FLUXES OF SYNTHETIC, ORGANIC, BIOGENIC, AND PETROLEUM-DERIVED COMPOUNDS THROUGH ANTARCTIC MARINE FOOD WEBS SUPPORTING AND DEPENDENT UPON KRILL

Principal Investigator:	Risebrough, R.W.
Performing Organization:	University of California, Bodega Marine Lab., PO Box 247, Bodega Bay, CA 94923
Supporting Organization:	US National Science Foundation, Division of Polar Programs, 1800 G St. N.W., Washington, DC 20550. Contract OPP77-22169
Period:	10/78 - 3/82
Funds:	$124,600

Baseline studies, Food web, Antarctica, Hydrocarbons, Biogenic hydrocarbons, Offshore production, *Krill

Data on the dependence of the antarctic food web on Krill will be collected in a series of cruises to provide among other things, baseline information needed for the anticipated exploitation of offshore petroleum deposits in Antarctica. Levels of petroleum-derived synthetic and naturally-occurring compounds will be determined in various levels of the food web by GC/MS.

[from SSIE No. DI-915]

Status: The first cruise is to be undertaken in February-March 1980.

Information Source: R.W. Risebrough, University of California, Bodega Marine Laboratory, PO Box 247, Bodega Bay, CA 94923.

79B-R042
HYDROCARBONS-NATURAL DISTRIBUTION AND DYNAMICS ON THE ALASKAN OUTER CONTINENTAL SHELF

Principal Investigator:	Shaw, D.
Performing Organization:	University of Alaska, Inst. of Marine Science, Fairbanks, AK 99701
Supporting Organization:	US Department of the Interior, BLM, 19th & C Sts. N.W., Washington, DC 20240
Period:	1975 - 1978
Funds:	$228,000 FY 78

Hydrocarbons, Distribution, Concentrations, Offshore development, Offshore production, Baseline studies, Environmental effects, Benthos, Alaska, Beaufort Sea

Detailed hydrocarbon concentration measurements are being taken in the Beaufort Sea and Cook Inlet. The Beaufort Sea study will provide an analysis of hydrocarbons in the biota, unavailable to date. Cook Inlet provides an ideal location for a comparative study of offshore oil production and behavior of hydrocarbons in the pelagic and benthic environments.

[from SSIE No. GUK-164]

79B-R043
ENVIRONMENTAL EVALUATION GUYAN OIL COMPANY FOR PILOT PROJECT

Principal Investigator:	Unknown
Performing Organization:	US Dept. of Energy, Oakridge National Lab., Oakridge, Tennessee 37830
Supporting Organization:	Same
Period:	1978 - N/A
Funds:	N/A

Environmental effects, EIS, Oil industry

Summary not available. [possibly oil pollution related]

[from SSIE No. DN-448]

79B-R044
ENVIRONMENTAL EFFECTS OF ENERGY-RELATED PROCESSES AND POLLUTANTS ON THE ENVIRONMENT: GREAT LAKES, EFFECTS OF POLLUTANTS ON BIOTA

Principal Investigator:	Wahlgren, M.A.
Performing Organization:	US Dept. of Energy, Argonne National Lab., 9700 S. Cass Ave., Argonne, IL 60439
Supporting Organization:	US Dept. of Energy, Division of Biomedical & Environmental Research, 1717 H St., N.W., Washington, DC 20545
Period:	1978 - N/A
Funds:	N/A

Environmental effects, Aquatic environment, Bioassay, Toxicity, Wastewaters, Great Lakes

Laboratory and field studies will be conducted to evaluate the actual and potential effects of energy-related pollutants on aquatic communities in the Great Lakes, based on existing pollutant concentrations. Predictive capabilities for assessing environmental effects of energy technologies will be developed. Oil pollution research constitutes a small portion of the project.

[from SSIE No. DN-31]

Information Source: M.A. Wahlgren, address above.

3. General Aspects

79B-R045 (R-119-78)
ENVIRONMENTAL ASSESSMENT OF AN ACTIVE OIL FIELD IN THE NORTHWESTERN GULF OF MEXICO

Principal Investigator:	Caillouet, C.W.
Performing Organization:	US Dept. of Commerce, NOAA, 6010 Executive Blvd., Rockville, MD 20852
Supporting Organization:	US Environmental Protection Agency, Office of Energy, Mineral & Industry, 401 M. St. S.W., Washington, DC 20460. Contract D6-E693-EO
Period:	9/75 - 9/81
Funds:	$600,000 FY 78

Oil fields, Environmental effects, Ecosystems, Contaminants, Gulf of Mexico

This assessment of the 17-yr-old Buccaneer Oil and Gas Field was initiated in April 1976. Objectives are 1) identification and documentation of the extent and types of biological, chemical, and physical effects resulting from development and production, 2) determination of the specific contaminants, their quantity, and effects on the ecosystem, and 3) development of methods for description and prediction of the fate and effects of oil field discharge constituents on the ecosystem.

Status: In the third year of research, an intensive investigation of environmental and ecosystem variables within the oil and gas field is being conducted, with a view toward comparing production platforms from wich effluents are released with satellite platforms (well jackets) from which no effluents are released.

[from SSIE No. GMA-5237]

Reports and Publications

ICHTHYOPLANKTON OF THE BUCCANEER OIL FIELD OFF GALVESTON, TEXAS
Finucane, J.H., and L.A. Collins. 1977.
Biennial International Estuarine Research Conference, 4th, Mt. Pocono, Pennsylvania, 1977. Abstract.

A STUDY PLAN FOR THE BUCCANEER OIL FIELD ASSESSMENT PROGRAM
Gallaway, B.J., R. Howard, K. Green, and L. Martin. 1976.
Report to NMFS from LGL, Ltd.-U.S. Inc., Bryan, Texas. 60 p.

ENVIRONMENTAL ASSESSMENT OF AN ACTIVE OIL FIELD IN THE NORTHWESTERN GULF OF MEXICO, 1976-1977
Jackson, W.B. (ed.). 1977.
NOAA Annual Report to EPA, Project No. EPA-IAG-D6-E693-EO. 759 p.

ENVIRONMENTAL ASSESSMENT OF THE BUCCANEER OIL AND GAS FIELD OFF GALVESTON, TEXAS: AN OVERVIEW
Jackson, W.B., K.N. Baxter, and C.W. Caillouet. 1978.
Offshore Technology Conference, 10th, Houston, Texas, 1978. Vol. 1:277-284. (OTC 3981)

A PRELIMINARY ENVIRONMENTAL ASSESSMENT OF THE BUCCANEAR OIL/GAS FIELD (PILOT STUDY OF THE BUCCANEER OIL FIELD, BENTHOS AND SEDIMENTS)
Harper, D.E., Jr., R.J. Scrudato, and C.S. Giam. 1976.
Final report to NMFS from Texas A&M University. Contract 03-6-42-35110. 63 p.

ENVIRONMENTAL EFFECTS OF OFFSHORE OIL PRODUCTION: ALKANES IN THE REGION OF THE BUCCANEER OILFIELD
Middleditch, B.S., B. Basile, and E.S. Chang. 1977.
Journal of Chromatography Vol. 142:777-785.

ENVIRONMENTAL ASSESSMENT OF AN ACTIVE OIL FIELD IN THE NORTHWESTERN GULF OF MEXICO (A REPORT OF NMFS/LGL WORKSHOP I, 1977-1978)
National Marine Fisheries Service. 1977.
Report to NMFS from LGL, Ltd.-U.S., Inc., Bryan, Texas. Project No. EPA-IAG-D6-E693-EP.

ASSESSMENT OF ENVIRONMENTAL IMPACT OF OFFSHORE PRODUCTION IN THE BUCCANEER OIL FIELD: SEDIMENTOLOGIC AND GEOCHEMICAL RESULTS
Wheeler, R.B., R.R. Schwarzer, and J.B. Anderson. 1978.
Offshore Technology Conference, 10th, Houston, Texas, 1978.
Vol. 1:285-290. (OTC 3082)

79B-R046
OIL AND HAZARDOUS SUBSTANCE SPILL ECOLOGICAL DAMAGE ASSESSMENT RESEARCH COORDINATION

Principal Investigator:	Davis, W.
Performing Organization:	US Environmental Protection Agency, Office of R&D, Gulf Breeze Environmental Research Lab., PO Box 368, John's Island, SC 29455
Supporting Organization:	Same
Period:	10/77 - 9/79
Funds:	$150,000 FY 78

Contingency planning, Analytical techniques, Oil spills, Environmental effects, Information systems, Spill response

Research coordination of the title subject will be effected through development of portable sampling analysis capability, establishing an information base for government and local users, compiling and evaluating existing methodologies for ecological damage assessment, and modifying techniques applicable in spill response.

[from SSIE No. ZMA-1661]

79B-R047
DEVELOP, TEST AND VALIDATE TECHNIQUES FOR USE IN A SCREENING PROTOCOL TO EVALUATE MARINE IMPACTS OF TOXIC SUBSTANCES

Principal Investigator: Randall, R.C., and R.M. Brice
Performing Organization: U.S. Environmental Protection Agency, Office of R&D, Environmental Research Lab., 200 S.W. 35th St., Corvallis, OR 97330
Supporting Organization: Same
Period: 9/77 - 9/82
Funds: $171,000 FY 78

Analytical techniques, Toxicity, Biological effects, Detection, Hydrocarbons, Sampling, Concentrations, Carcinogens

For the fifty worst compounds presumed to be carcinogenic, mutagenic, or teratogenic, classes (organic, metals, organic-phosphate, etc.) will be established for definition of response in a variety of situations. These situations include air/water, water/sediment, and air/sediment interfaces at varying salinities.

Status: A procedure for determining subacute effects of petroleum/hydrocarbons on marine animals has been developed.

[from SSIE No. ZMA-1529]

79B-R048
NAVY ENVIRONMENT: CORRECTIVE MEASURES FOR FOULING OF OPTICAL SURFACES IN THE MARINE ENVIRONMENT

Principal Investigator: Vedros, N.A., and R.J. Heckly
Performing Organization: University of California, Naval Biosciences Lab., Berkeley, CA 94720
Supporting Organization: US Dept. of Defense, Navy, Office of Naval Research, 800 N. Quincy St., Arlington, VA 22217. Contract N00014-75-C-0774
Period: 2/79 - 1/80
Funds: $285,598

Environmental effects, Marine environment, Food web, Biological effects, Source identification

The objectives of this research are to determine the ecological impact of pollutants on the marine and terrestrial environments and examine means of controlling and reducing pollution. A portion of the project will focus on oil residues in marine food chains and on techniques for rapid indentification of oil spills.

[from SSIE No. GQN-23238-4]

Status: The projects are progressing on schedule.

Reports and Publications

ASSESSMENT AND SIGNIFICANCE OF SEDIMENT ASSOCIATED OIL AND GREASE IN AQUATIC ENVIRONMENTS
DiSalvo, L.H., H.E. Guard, N.D. Hirsch, and J. Ng. 1977.
Technical Report D-77-26. Final report. 148 p.

Information Source: R.J. Heckly, address above.

D. FATE OF OIL IN THE ENVIRONMENT

1. Biodegradation

79B-R049 (R-129-78)
NAVY ENVIRONMENT: FATE AND EFFECTS OF OIL POLLUTANTS IN EXTREMELY COLD ENVIRONMENTS

Principal Investigator: Atlas, R.M.
Performing Organization: University of Louisville, School of Arts & Sciences, 129 E. Broadway, Louisville, KY 40208
Supporting Organization: US Dept. of Defense, Navy, Office of Naval Research, 800 N. Quincy St., Arlington, VA 22217
Period: 9/73 - Cont.
Funds: $25,605 FY 79

Biodegradation, Microorganisms, Crude oil, Ice, Arctic, Biological effects, Alaska

This on-going project is designed to study the interaction of microbial coastal water communities with crude oil in Alaskan coastal waters. Changes in microbial populations and effects of oil essential to microbial processes such as nitrogen fixation and photosynthesis are being studied. The experiments are designed to determine if oil is degradable in frozen seas.

[from SSIE No. GQN-475257-5]

79B-R050 (R-299-75)
GENETICALLY ENGINEERED MICROORGANISMS FOR ENHANCED PRODUCTION OF PROTEIN FROM PETROLEUM

Principal Investigator: Chakrabarty, A.M.
Performing Organization: General Electric Co., 1 River Rd., Schenectady, NY 12305
Supporting Organization: National Science Foundation, Div. of Physiology, Cellular & Molecular Biology, 1800 G. St. N.W., Washington, DC 20550
Period: 5/76 - 9/81
Funds: N/A

Biodegradation, Microorganisms, Bacteria, Aromatic hydrocarbons, PAH, Lakes, Rivers, *Genetic engineering, *Pseudomonas

Aromatic- and PAH-metabolizing pathways will be screened and genetically analyzed in several Pseudomonas species to characterize the transmissible plasmid nature of the genes specifying these pathways. Multi-plasmid single strains will be constructed to be used for enhanced production of protein from petroleum or for rapid cleanup of oil spills on rivers and lakes.

[from SSIE No. GSB-16385-2]

79B-R051 (R-132-78)
NAVY ENVIRONMENT: MICROBIAL ECOLOGY STUDIES OF BIOFOULING OF TREATED AND UNTREATED WOOD PILINGS IN THE MARINE ENVIRONMENT

Principal Investigator: Colwell, R.R.
Performing Organization: University of Maryland, School of Agriculture, College Park, MD 20742
Supporting Organization: US Dept. of Defense, Navy, Office of Naval Research, 800 N. Quincy St., Arlington, VA 22217 Contract N0014-75-C-0340, P00006
Period: 8/72 - Cont.
Funds: $74,000 FY 78

Biodegradation, Bacteria, Microorganisms, Analytical techniques, Chemical analysis

The ability of marine and estuarine bacteria to degrade hydrocarbons and petroleum in situ is being tested by a variety of techniques including electron microscopy and gas liquid chromatography. The biodegradation of lipids and refractory materials in suspended particulates is being examined. Additional work is concerned with the interactions of microorganisms in estuarine and oceanic ecosystems.

[from SSIE No. GQN-223667-5]

Reports and Publications

MICROBIAL DEGRADATION OF PETROLEUM IN THE MARINE ENVIRONMENT
Colwell, R.R. 1977.
Report UM/ONR-4. Annual report. 21 p.

MICROBIAL ECOLOGY STUDIES OF BIOFOULING OF TREATED AND UNTREATED WOOD PILINGS IN THE MARINE ENVIRONMENT
Colwell, R.R. 1978.
Report UM/ONR-5. Annual report. 25 p.

MICROBIAL ECOLOGY STUDIES OF THE METULA SPILL IN THE STRAITS OF MAGELLAN
Colwell, R.R., A.L. Mills, J.D. Walker, P. Garcia-Tello, and V. Campos-P. 1978.
Journal of the Fisheries Research Board of Canada 35(5):573-580.

ENUMERATION OF PETROLEUM-DEGRADING MARINE AND ESTUARINE MICROORGANISMS BY THE MOST PROBABLE NUMBER METHOD
Mills, A.L., C. Breuil, and R.R. Colwell. 1978.
Canadian Journal of Microbiology 24(5):552-557.

Information Source: R.R. Colwell, address above.

79B-R052 (R-133-78)
THE BACTERIAL FLORA IN SURFACE MICROLAYERS OF OCEAN AND ESTUARINE WATERS AND ITS ABILITY TO DEGRADE CRUDE OIL

Principal Investigator: Oliver, J.D.
Performing Organization: University of North Carolina, School of Science & Mathematics, Highway 49 N., Charlotte, NC 28205
Supporting Organization: American Chemical Society, 1155 16th St. N.W., Washington, DC 20036
Period: 10/77 - 9/80
Funds: $3,000 FY 79

Biodegradation, Microorganisms, Bacteria, Crude oil, Marine environment, Estuaries, Sediments

A quantitative and qualitative examination of bacterial flora occurring in the upper 100 μ of selected estuarine and ocean waters will be made with comparisons to those found at a depth of 1 m and in bottom sediments. These populations' ability to degrade crude oil will be studied.

[from SSIE No. PCS-2984-1]

79B-R053
MICROBIAL DEGRADATION OF HYDROCARBONS IN EXPERIMENTAL MICROBIAL ECOSYSTEMS

Principal Investigator: Pritchard, H.
Performing Organization: US Environmental Protection Agency, Office of R&D, Gulf Breeze Environmental Research Lab., Sabine Island, Gulf Breeze, FL 32561
Supporting Organization: Same
Period: 10/78 - 9/79
Funds: $24,800 FY 78

Biodegradation, Hydrocarbons, Decomposition, Marine environment, Recovery

Microbial degradation of hazardous organic compounds in marine ecosystems will be determined. Compounds including petroleum hydrocarbons and pesticides, singly or in combination, will be studied to help establish regulatory criteria and guidelines. Tests will be conducted using highly refined continuous culture systems.

[from SSIE No. ZMA-1662]

2. Physical and Chemical Processes

79B-R054
TRANSPORT MECHANISMS AND HYDROCARBON ADSORPTION PROPERTIES OF SUSPENDED MATTER IN LOWER COOK INLET

Principal Investigator:	Feely, R.A., and J.D. Cline
Performing Organization:	US Dept. of Commerce, NOAA, Environmental Research Pacific Marine Environmental Lab., 2725 Montlake Blvd. E., Seattle, WA 98112
Supporting Organization:	US Dept. of the Interior, BLM, 19th and C Sts. N.W., Washington, DC 20240
Period:	1975 - 1978
Funds:	$137,400 FY 78

Sources, Fate, Sediments, Adsorption, Movement, Production, Contaminants, Alaska, *Cook Inlet

This portion of the suspended matter studies will determine the vertical fluxes of suspended matter in areas of high sedimentation, the correlation between high frequency velocity fluctuations and temporal variations in suspended matter concentrations, and elemental composition of the settled matter within the traps. Another portion of the study will be responsible for the analysis of total and extractable Al, Fe, Mn, Cr, Cu, Pb, Ni, and Zn. The objectives of this study are to determine if high primary production in Kachemak Bay causes seasonal variations in trace element content of water, suspended matter and biota, and whether or not oil production activities in Upper Cook Inlet contribute significantly to the metal content in Lower Cook Inlet.

[from SSIE No. GUK-189]

79B-R055
OIL POOLING UNDER SEA ICE

Principal Investigator:	Kovacs, A.
Performing Organization:	US Dept. of Defense, Army, Cold Regions Research & Engineering Lab., PO Box 282, Hanover, NH 03755
Supporting Organization:	US Dept. of the Interior, BLM, 19th & C Sts. N.W., Washington, DC 20240. Contract NOAA R.D. No. RK-8-0065
Period:	1978 - 1979
Funds:	$30,464 FY 79

Ice, Arctic, Oil spills, Fate, Movement, Predictions, *Pooling

The objective of this project is to acquire detailed cross-sectional information on the thickness and bottom relief of both first year and multi-year sea ice found in the waters over the continental shelf of the Beaufort and Chukchi Sea. Profiling will provide under-ice topographic information

which will be used to determine the flow direction of oil discharged under fast ice and the quantity of oil which can be expected to pool in the under-ice relief.

[from SSIE No. GUK-204]

Status: Data reduction and reports are in preparation.

Reports and Publications

OIL POOLING UNDER SEA ICE
Kovacs, A. 1979.
Annual report R.U. 562, Contract NOAA R.D. No. RK-8-0065. (Report period 1 April 1978 - 31 March 1979)

SEA ICE THICKNESS PROFILING AND UNDER-ICE OIL ENTRAINMENT
Kovacs, A. 1977.
Annual Offshore Technology Conference, 9th, Houston, Texas, 2-5 May 1977. p. 547-554. (Paper OTC 2949)

ANISTROPIC PROPERTIES OF SEA ICE IN THE 50-150 MHZ RANGE
Kovacs, A., and R.M. Morey. 1979.
Journal of Geophysical Research. In press.

RADAR ANISTROPY OF SEA ICE DUE TO PREFERRED AZIMUTHAL ORIENTATION OF THE HORIZONTAL C AXES OF ICE CRYSTALS
Kovacs, A., and R.M. Morey. 1978.
Journal of Geophysical Research 83(C12):6037-6046.

Information Source: A. Kovacs, address above.

3. Models, Simulations and Predictions

79B-R056
OCEANIC CIRCULATION OF NORTHERN COOK STRAIT, NEW ZEALAND

Principal Investigator:	Bowman, N.J.
Performing Organization:	State University of New York, Marine Science Research Center, Stony Brook, NY 11790
Supporting Organization:	National Science Foundation, Div. of International Programs, 1800 G. St. N.W., Washington, DC 20550
Period:	6/78 - 9/79
Funds:	$20,000 FY 78

Models, Oceans, Predictions, Spill trajectories, Sediments, *New Zealand *Cook Strait

An existing, two-dimensional, numerical tidal model of Cook Strait will be applied, using current meter and tide height data to predict tides, circulation, the effects of turbulence on sediment distribution, tidal energy dissipation, and the location of fronts. The complex properties of continental shelf dynamics, insights as to the use of predictive models, and trajectory forecasting are areas of research which will benefit from the study.

[from SSIE No. GSN-3260]

79B-R057
OIL SPILL MODEL

Principal Investigator:	Friedlander, D.
Performing Organization:	Oceanographic Services, Inc., PO Box 6783, Santa Barbara, CA 93111
Supporting Organization:	Same
Period:	N/A
Funds:	N/A

Models, Oil slicks, Behavior, Predictions, Fate, Santa Barbara Channel

A computer model to predict the size, location and density of an oil slick from a spill of given size and location has been developed.

Status: The model and associated graphics have been completed. The model has been applied to the Santa Barbara oil spill and the results compare favorably with US Coast Guard observations.

Information Source: D. Friedlander, address above.

79B-R058
MODELING ORGANIC SOLUTE TRANSPORT IN GROUND WATER

Principal Investigator:	Robertson, J.B.
Performing Organization:	US Dept. of the Interior, Geological Survey, 345 Middlefield Rd., Menlo Park, CA 94025
Supporting Organization:	US Dept. of the Interior, Geological Survey, Water Resources Div., 12201 Sunrise Valley Dr., Reston, VA 22092
Period:	1/76 - 8/78
Funds:	$62,000 FY 78

Models, Predictions, Groundwater, Contamination, Oil shale

The overall objective was to demonstrate the applicability of numerical modeling techniques to the analysis and prediction of organic solute migration in ground water. Coal and oil shale production may be major future sources of organic solutes.

[from SSIE No. ZUA-4130-1]

Status: The project has been discontinued due to transfer of the project director.

Information Source: J.B. Robertson, address above.

79B-R059
DYNAMICS OF NEAR-SHORE SEA ICE (ARCTIC OCS RESEARCH UNIT #88)

Principal Investigator:	Weeks, W.F., and A. Kovacs
Performing Organization:	US Army Cold Regions Research & Engineering Lab., PO Box 282, Hanover, NH 03755
Supporting Organization:	US Dept. of the Interior, BLM, 19th & C Sts. N.W., Washington, DC 20240
Period:	1975 - 1979
Funds:	$64,671 FY 79

Models, Ice, Movement, Spill trajectories, Remote sensing, Offshore development, Risk analysis, Beaufort Sea, *Radar

Radar studies in the Bering Strait have been conducted for development of theoretical models for ice and oil movement through the straits. Coastal ice movement studies in the Beaufort Sea and remote sensing studies in the Beaufort and Chukchi Seas have also been performed and will contribute to hazard assessment and offshore design aspects of oil and gas development in the Beaufort Sea.

[from SSIE No. GUK-199]

Status: Results have been written up in a number of published reports, some of which are available on the OCS Data Bank.

Reports and Publications

SEA ICE THICKNESS PROFILING AND UNDER-ICE OIL ENTRAPMENT
Kovacs, A. 1977.
Annual Offshore Technology Conference, 9th, Houston, Texas, 2-5 May 1977. Vol. 3, p. 547-554. (OTC 2950)

4. General Fate of Oil

79B-R060
BIOGEOCHEMISTRY OF PETROLEUM COMPONENTS AT THE SEDIMENT-WATER INTERFACE

Principal Investigator:	Teal, J.M., and J.W. Farrington
Performing Organization:	Woods Hole Oceanographic Institution, Main St., Woods Hole, MA 02543
Supporting Organization:	US Dept. of Energy, Division of Biomedical & Environmental Research, 1717 H St. N.W., Washington, DC 20545
Period:	6/77 - 6/79
Funds:	N/A

Hydrocarbons, Fate, Distribution, Biological effects, Analytical techniques, Chemical analysis, Buzzards Bay, New York Bight

The title study will compare hydrocarbon distribution and composition to biological activity by use of simple mixing experiments. Biological effects will be measured by using isolated benthic systems in the laboratory, and then in the field at Buzzards Bay and the New York Bight. Determination will be made as to which chemical compartments the hydrocarbons are located in, how tightly they are bound, and how extraction by organisms compares with solvent extraction.

[from SSIE No. DN-1195]

E. POLLUTION ASPECTS OF OIL EXPLORATION, DEVELOPMENT, AND PRODUCTION

1. Biological Aspects

79B-R061 (R-051-78)
EFFECTS OF CHEMICALS USED IN OFFSHORE OIL AND GAS DRILLING OPERATIONS ON MARINE ORGANISMS

Principal Investigator:	Richards, N., S. Schimmel, and S. Tagatz
Performing Organization:	US Environmental Protection Agency, Office of R&D, Gulf Breeze Environmental Research Lab., Sabine Island, Gulf Breeze, FL 32561
Supporting Organization:	Same
Period:	10/76 - 10/79
Funds:	$275,000 FY 79

Hydrocarbons, Petrochemicals, Toxicity, Bioassay, Ecosystems, Offshore production, Drilling, *Drilling muds

Single species and community bioassays are being conducted on selected components of drilling muds to determine the effects of emissions from offshore drilling operations on aquatic organisms and communties. The mutagenic, carcinogenic and teratogenic components of shale oil will be characterized. Toxicity tests on shale oil derived marine diesel fuel will also be conducted.

[from SSIE No. ZMA-1622]

Status: Toxicity tests are now in progress.

Reports and Publications

EFFECTS OF A LIGNOSULFONATE-TYPE DRILLING MUD ON DEVELOPMENT OF EXPERIMENTAL ESTUARINE MACROBENTHIC COMMUNITIES
Tagatz, M.E., J.M. Ivey, H.K. Lehman, and J.L. Oglesby. 1978.
Northeast Gulf Science 2(1):35-42.

EFFECT OF BARITE ($BaSO_4$) ON DEVELOPMENT OF ESTUARINE COMMUNITIES
Tagatz, M.E., and M. Tobia. 1978.
Estuarine and Coastal Marine Science, Vol. 7:401-407.

Information Source: N. Richards, address above.

2. Physical and Chemical Aspects

79B-R062
POLLUTION ASSESSMENT OF ADVANCED OIL AND GAS RECOVERY PROGRAMS

Principal Investigator:	Tuffly, B.
Performing Organization:	Rockwell International Corp., 8900 DeSoto Ave., Canoga Park, CA 91304
Supporting Organization:	US Environmental Protection Agency, Office of R&D, Industrial Environmental Research Lab., 5555 Ridge Ave., Cincinnati, OH 45268. Contract 68-03-2221
Period:	6/75 - 6/78
Funds:	$163,000 FY 78

Refineries, Wastewaters, Hydrocarbons, Monitoring, Water quality, Pollution control, *Thermal oil recovery

This study correlates compositions of discharges from tertiary oil recovery processes with formation characteristics and process variables. Data needs include cost/benefit analyses of air quality strategies for thermal oil recovery projects, hydrocarbon emission point source identification, chemical concentrations in thermal oil recovery water, characterization of organic and inorganic pollutants from each process.

[from SSIE No. GMA-4994-1]

F. POLLUTION ASPECTS OF OIL TRANSPORT, TRANSFER, AND STORAGE

1. Loading and Offloading Facilities

79B-R063
DEVELOPMENT OF OPERATIONAL STANDARDS FOR PREVENTION OF OIL SPILLS DURING OIL TRANSFER OPERATIONS

Principal Investigator:	Miller, W.
Performing Organization:	Oceanographic Institute of Washington, 312 First Ave. N., Seattle, WA 98109
Supporting Organization:	California Regional Water Quality Control Board, San Francisco Bay Region, 1111 Jackson St., Oakland, CA 94607. Grant CEIPG 79-8
Period:	4/79 - 8/79
Funds:	$30,000

Oil transfer, Tankers, Ships, Oil discharges, Pollution prevention, San Francisco Bay

The project will result in a regional oil spill prevention policy and proposed procedures governing oil transfer operations in the San Francisco Bay. The funding will be used to hire consultants to "1) develop background information and recommend procedures for oil transfer facilities, dry dock facilities, dry cargo docks, and lightering operations which would address such issues as equipment, operational procedures, maintenance, and staff training; and 2) provide additional expert advice and testimony at staff meetings, State and Regional Board hearings, and other public hearings as required."

Information Source: W. Miller, address above.

G. PETROLEUM AND PETROCHEMICAL INDUSTRY WASTE TREATMENT AND DISPOSAL

1. Waste Treatment and Disposal Methods

79B-R064
ASSESSMENT OF ENVIRONMENTAL CONTROL TECHNOLOGY FOR WASTE WATER IN IN-SITU OIL SHALE RETORTING

Principal Investigator:	Dawson, B.H.
Performing Organization:	US Dept. of Energy, Battelle Pacific Northwest Lab., PO Box 999, Richland, WA 99352
Supporting Organization:	US Dept. of Energy, Division of Environmental Control Technology, Washington, DC 20545
Period:	1978 - N/A
Funds:	N/A

Oil shale, Refining, Wastewaters, Aromatic hydrocarbons, Biological treatment, Pollution control

Shale oil retort water, generated by the pyrolysis recovery process, is similar in some respects to wastewaters from petroleum refineries and coking plants although retort water is much higher in dissolved organics and tends to have a greater aliphatic/aromatic ratio than coal-derived waters. Processes for bench scale testing are essentially the same as those used in refineries. It was felt that although high organic removal was attained by biological treatment alone, unusually high concentrations of organics in retort water may mean that this method will not be sufficient to meet water quality standards and that supplementary treatment such as activated carbon sorption will be required.

[from SSIE No. DN-556]

79B-R065
IDENTIFICATION OF REFRACTORY ORGANIC COMPOUNDS FROM TREATED REFINERY WASTEWATERS

Principal Investigator: Harrison, W.
Performing Organization: US Department of Energy, Argonne National Lab., 9700 S. Cass Ave., Argonne, IL 60439
Supporting Organization: US Environmental Protection Agency, Office of R&D, Robert S. Kerr Environmental Research Lab., PO Box 1198, Ada, OK 74820
Period: 6/75 - 10/78
Funds: N/A

Refining, Wastewater treatment, Contaminants, Pollution control, Illinois, *Indiana

This study identified the refractory organic pollutants in treated petroleum effluents entering waters in the Calumet District of Illinois and Indiana. Results will be used to evaluate, plan, formulate, and implement research on treatment and control systems to remove these organic contaminants discharged from petroleum refining wastewater treatment systems.

[from SSIE No. GMA-5293]

79B-R066
IDENTIFICATION OF REFRACTORY ORGANIC COMPOUNDS IN TREATED REFINERY WASTEWATERS

Principal Investigator: Raphaelian, L.A.
Performing Organization: US Dept. of Energy, Argonne National Lab., 9700 S. Cass Ave., Argonne, IL 60439
Supporting Organization: US Dept. of Energy, Division of Environmental Control Technology, Washington, DC 20545. Contract W-31-109-ENG-38
Period: 1977
Funds: N/A

Wastewater treatment, Refineries, Activated sludge, Chemical analysis, GC/MS, DOE, EPA, *Activated carbon

GC/MS was used at four oil refineries using activated sludge for wastewater treatment to determine 1) the effectiveness of their present wastewater treatment processes and 2) the usefulness of a secondary treatment consisting of activated carbon as outlined in EPA's "Refining Guidelines Document."

Status: A final report was due in September 1978.

[from Division of Environmental Control Technology Program-1977. US Department of Energy, 1978. Report DOE/EV-0015. p. 48-49]

79B-R067
MEMBRANE ULTRAFILTRATION OF SULFONATES AND OIL FROM MICELLAR FLOODING WASTEWATERS

Principal Investigator: Thompson, R.E.
Performing Organization: University of Tulsa, Chemical Engineering Dept., 600 S. College Ave., Tulsa, OK 74104
Supporting Organization: US Dept. of Energy, Oak Ridge Operations, PO Box E, Oak Ridge, TN 37830. Contract EE-77-S-05-5596
Period: 9/77 - 9/79
Funds: $36,440 FY 78

Wastewaters, Filtration, Pollution control, Pollution prevention, Refining, *Micellar flooding, *Sulfonates

The title project is the first part of a three-part program to study the removal of spent sulfonates and emulsified or dispersed oil from micellar flooding wastewaters generated in enhanced petroleum recovery operations. This part is devoted to testing and evaluation of a membrane ultrafilter with synthetic wastewaters. Solute rejection and membrane fouling as a function of composition and operating parameters will constitute the first stage of investigation.

[from SSIE No. DQ-37]

Status: During this second year of the project,work will be continuing on filtration of simulated wastewater with a cellulose acetate membrane to determine the effects of different sulfonates and polymers.

Information Source: R.E. Thompson, address above.

2. Oil-Water Separation

79B-R068
OILY WATER SEPARATORS EVALUATION

Principal Investigator: Sili, P., B. Tramier, and I.P. Thery
Performing Organization: Societe Nationale Elf Aquitaine (Production), Avenue des Lilas, 64000 Pau, France
Supporting Organization: Societe Nationale Elf Aquitaine (Production) Total Expl. Prod., 204 Rond Point du Pont de Sevres, 92516 Boulogne Billancourt, France
Period: N/A
Funds: $600,000

Oil-water separation, Equipment, Design-engineering, Analytical techniques, France, *Performance testing

Oil-water separators are being tested in a pilot plant built in France for this purpose. Test parameters include the amount and quality of oil, the size of oil droplets, the temperature, the amount of suspended solids, and the salt content of the water.

Status: The pilot plant is now fully operational. Analytical equipment includes IR and UV spectrophotometers and a laser granulometer. Six commercial separators are currently under evaluation.

Information Source: B. Tramier, address above.

H. MISCELLANEOUS

79B-R069
MESA/PUGET SOUND ENERGY RESEARCH PROJECT AND MESA N.Y. BIGHT DATA BASE MANAGEMENT

Principal Investigator:	Law, E.F., D. Dale, J. Ridlon, and S. Stillwaugh
Performing Organization:	US Dept. of Commerce, NOAA National Oceanographic Data Center, 2001 Wisconsin Ave. N.W., Washington, DC 20235
Supporting Organization:	US Dept. of Commerce, NOAA, Environmental Research Labs., 14th and Constitution Ave. N.W., Washington, DC 20234
Period:	10/77 - 9/78
Funds:	$41,000 FY 78

Information systems, Resource management, Statistical analysis, Puget Sound, Washington, New York, *MESA

These efforts will establish a specialized MESA/PSERP data base to provide rapid and efficient data displays, data summaries, statistical analyses, data collection inventories and other data products and services required by the MESA/PSERP project and subsequent users.

[from SSIE No. ZBP-1640]

Guide to the Master List of Keywords and the Subject Keyword Index

The following Master List of Keywords is a controlled list of approximately 400 scientific, technical, geographic, and other descriptive terms relevant to the field of oil pollution. For each literature abstract and research project summary contained in this issue, a string of several terms has been selected from this list to serve as a reference guide to each entry. The Master List is continually updated to reflect common word usage and current trends in oil pollution literature and research. When necessary, additional free-language terms are assigned to more thoroughly define the subject coverage of an entry; such terms are preceded by an asterisk (*).

The terms included in the Master List are alphabetically permuted by computer to form the Subject Keyword Index. Thus, the string of keywords for each abstract is listed in all possible alphabetical arrangements to provide rapid access to, and cross-referencing of, any entry in this issue. The free-language terms (*) are not alphabetically permuted.

To effectively use the permuted Subject Keyword Index, the reader should use the following procedure: 1) Scan the Master List of Keywords and Cross-Reference Guide to determine all possible terms and word variants applicable to the topic of interest; 2) look up all terms in the permuted Subject Keyword Index and scan the other keywords in each entry to determine the relevancy of the entry; 3) note the citation numbers of relevant entries and locate them in the body of the ABSTRACTS. Citation numbers prefixed with the letter R denote research project summaries.

MASTER LIST OF KEYWORDS
AND CROSS-REFERENCE GUIDE
TO RELATED TERMS

S: See
SA: See also

Absorption
  SA: Adsorption, Sorbents
Activated sludge
  SA: Biological treatment, Sludge, Solid wastes
Acute effects
  SA: Biological effects, Mortality, Toxicity
Adsorption
  SA: Absorption, Sorbents
Africa
Alabama
Alaska
Algae
  SA: Phytoplankton
Amoco Cadiz spill
  SA: France
Amphipods
  SA: Invertebrates
Analytical techniques
  SA: Bioassay, Chemical analysis, Chromatography, Detection, GC/MS, Source identification, Spectrometry, Spectroscopy
Animals
  SA: Birds, Invertebrates, Marine mammals, Marine organisms, Vertebrates, Wildlife
Annelids
  SA: Invertebrates, Marine organisms, Polychaetes
Antarctica
API (American Petroleum Institute)
Aquatic environment
  SA: Freshwater, Lakes, Marine environment, Oceans, Rivers, Sea surface, Streams
Arctic
  SA: Ice, Subarctic regions
Arctic Ocean
Argentina
Argo Merchant spill
Aromatic hydrocarbons
  SA: Hydrocarbons, PAH
Asia
Atlantic coast
Atlantic Ocean
Australia
Bacteria
  SA: Microorganisms
Bahamas
Ballast
Baltic Sea
  SA: Segregated ballast, Tankers, Wastewater treatment
Barents Sea
Baseline studies
  SA: EIS
Bays
  SA: Coastal waters, Estuaries, Harbors
Beach cleanup
  SA: Spill cleanup
Beaches
  SA: Coasts, Intertidal zone, Sediments, Shorelines
Beaufort Sea
Behavior
  SA: Dispersion, Drift, Fate, Movement, Spreading
Belgium
Benthos
  SA: Invertebrates, Marine organisms
Bering Sea
Bermuda
Bibliographies
Bilges
  SA: Ships, Tankers

Bioassay
SA: Analytical techniques
Biodegradation
SA: Bacteria, Microorganisms
Biogenic hydrocarbons
SA: Hydrocarbons
Bioindicators
Biological effects
SA: Acute effects, Chronic effects, Sublethal effects, Toxicity
Biological treatment
SA: Wastewater treatment
Biomass
Birds
SA: Animals, Vertebrates, Wildlife
Black Sea
SA: USSR
BLM (Bureau of Land Management)
SA: Government agencies, US government
Blowout prevention
Blowouts
Book review
Booms
SA: Design-engineering, Equipment, Spill containment
Bouchard 65 spill
SA: Buzzards Bay
Brazil
Buzzards Bay
SA: Massachusetts
California
SA: Pacific coast
Canada
Carcinogens
SA: Health hazards, PAH
Caribbean Sea
Caspian Sea
SA: USSR
Chedabucto Bay
SA: Canada
Chemical analysis
SA: Analytical techniques, Chromatography, Detection, GC/MS, Source identification, Spectrometry, Spectroscopy
Chemical effects
Chesapeake Bay
SA: Delaware, Maryland
Chile
China
Chromatography
SA: Analytical techniques, Chemical analysis, GC/MS
Chronic effects
SA: Biological effects, Toxicity
Coalescence
SA: Flocculation, Wastewater treatment
Coastal waters
SA: Atlantic coast, Bays, Coasts, Harbors, Pacific coast
Coastal zone management
SA: Environmental management, Resource management
Coasts
SA: Bays, Beaches, Coastal waters, Harbors, Ports, Shorelines
Cold Climates
S: Arctic, Arctic Ocean, Subarctic regions
Compensation
SA: Insurance, Liability
Concentrations
SA: Chemical analysis, Detection
Connecticut
Conservation
SA: Coastal zone management, Environmental management, Resource management
Containment
S: Booms, Equipment, Spill cleanup, Spill containment
Contaminants
Contamination
Contingency planning
SA: Spill cooperatives, Spill response
Corals
Coral reefs
Cost analysis
SA: Economics, Economic effects
Crankcase oil
SA: Lubricating oil
Crude oil
SA: Aromatic hydrocarbons, Hydrocarbons
Crude oil washing
SA: Ballast, Oil discharges, Segregated ballast, Tankers
Crustaceans
SA: Invertebrates, Marine organisms
Decomposition

Deepwater ports
SA: Harbors, Oil terminals, Ports
Delaware
Delaware Bay
Demulsification
Denmark
Design-engineering
SA: Equipment, Patent, Product information
Detection
SA: Chemical analysis, Monitoring, Source identification
Development
SA: Drilling, Exploration, Growth, Offshore development, Production
Dispersants
SA: Emulsifiers, Spill cleanup, Surfactants
Dispersion
SA: Behavior, Drift, Movement, Spreading
Disposal
SA: Waste oil disposal, Wastewater disposal, Wastewaters
Distillation
Distribution
SA: Concentrations
DOE (Department of Energy)
SA: Government agencies, US government
Drift
SA: Behavior, Dispersion, Movement, Spreading
Drilling
SA: Exploration, Offshore drilling, Oil fields, Oil wells, Platforms
Echinoderms
SA: Invertebrates, Marine organisms
Economic effects
SA: Socioeconomic effects
Economics
SA: Cost analysis
Ecosystems
SA: Food web, Habitats, Niches
Ecuador
Effluents
S: Wastewaters
Effluent treatment
S: Wastewater treatment
EIS (Environmental Impact Statement)
SA: Baseline studies
Ekofisk blowout
Emulsification
Emulsifiers
SA: Dispersants, Surfactants
Emulsions
Engineering
S: Design-engineering
England
SA: UK
English Channel
Environmental deterioration
Environmental effects
Environmental Impact Statement
S: Baseline studies, EIS
Environmental management
SA: Coastal zone management, Resource management
Environmental protection
EPA (Environmental Protection Agency)
SA: Government agencies, US government
Equipment
SA: Booms, Patents, Product information, Skimmers, Spill cleanup
ERDA (Energy Research and Development Administration)
SA: DOE, Government agencies, US government
Estuaries
SA: Bays
Europe
Evaporation
Exploration
SA: Drilling, Offshore exploration, Production
Extraction
SA: Oil shale, Production, Tar sands
Fate
SA: Behavior
FEA (Federal Energy Administration)
SA: DOE, ERDA, Government agencies, US government
Filtration
SA: Flocculation, Ultrafiltration, Wastewater treatment
Finland
Fish
SA: Vertebrates, Marine organisms

Fisheries
Flocculation
SA: Coalescence, Filtration, Wastewater treatment
Florida
Florida spill
Flotation
SA: Oil-water separation, Wastewater treatment
Food chain
S: Food web
Food web
Foreign governments
SA: Government agencies
Fossil fuels
SA: Crude oil
France
Freshwater
SA: Groundwater, Lakes, Rivers, Streams, Water quality
Fuel oil
Fuels
SA: Fossil fuels
Fungi
SA: Microorganisms
Gas-liquid chromatography
S: Chemical analysis, Chromatography
Gasoline
SA: Fuel oil, Fuels
GC/MS (Gas chromatography/Mass spectrometry)
SA: Analytical techniques, Chemical analysis, Chromatography, Spectrometry
Georges Bank
SA: Atlantic Ocean, OCS
Georgia
Germany, East
Germany, West
Government agencies
SA: BLM, DOE, EPA, ERDA, FEA, NOAA, USCG, USGS, USN; Foreign governments, State governments, US government
Gravity separation
SA: Oil-water separation, Wastewater treatment
Great Britain
S: UK
Great Lakes
Greenland
Groundwater
SA: Freshwater, Water quality
Growth
SA: Development, Metabolism
Guidelines
SA: Manuals, Regulations
Gulf of Alaska
Gulf of Mexico
Habitats
SA: Ecosystems, Niches
Harbors
SA: Bays, Coastal waters, Deepwater ports, Oil terminals, Ports
Health hazards
SA: Carcinogens
Hydrocarbons
SA: Aromatic hydrocarbons, Biogenic hydrocarbons, Crude oil, PAH, WSF
Ice
SA: Arctic, Subarctic regions
Illinois
IMCO (International Maritime Consultative Organization)
SA: International agreements
Incineration
SA: Waste oil treatment
India
Indian Ocean
Indonesia
Industries
SA: Oil industry, Petrochemicals
Information systems
Infrared spectroscopy
S: Analytical techniques, Spectroscopy
Inland
SA: Land spills, Onshore impacts
Insurance
SA: Compensation, Liability
International agreements
SA: Foreign governments
International conventions
SA: Foreign governments, Legislation, Regulations
Intertidal zone
SA: Beaches, Coastal Waters, Shorelines
Invertebrates
SA: Benthos, Crustaceans, Echinoderms, Marine organisms, Mollusks
Iran
Iraq
Ireland
SA: UK
Israel

Italy
Japan
Kuwait
Labrador Sea
Lakes
  SA: Freshwater, Great Lakes
Land farming
  SA: Waste oil disposal
Land spills
  SA: Inland
Law enforcement
  SA: Legislation, Regulations
Leakage
  SA: Oil discharges
Legislation
  SA: International conventions, Law enforcement, Regulations
Liability
  SA: Compensation, Insurance, Law enforcement
Lightering
  S: Oil transfer, Ships, Tankers
Louisiana
Lubricating oil
  SA: Crankcase oil
Maine
Manuals
  SA: Guidelines
Marine environment
  SA: Aquatic environment, Oceans, Sea surface
Marine mammals
  SA: Animals, Vertebrates, Wildlife
Marine organisms
  SA: Animals, Annelids, Crustaceans, Echinoderms, Fish, Invertebrates, Microorganisms, Mollusks, Vertbrates
Marshes
Maryland
Massachusetts
Mass spectrometry
  S: GC/MS, Spectrometry
Mass spectroscopy
  S: Spectroscopy
Mediterranean Sea
Metabolism
  SA: Growth, Release, Uptake
Metula spill
  SA: Strait of Magellan
Mexico
Michigan
  SA: Great Lakes
Microorganisms
  SA: Algae, Bacteria, Biodegradation, Fungi, Yeasts
Middle East
Mississippi
Mississippi River
Models
  SA: Behavior, Predictions, Spill trajectories
Mollusks
  SA: Invertebrates, Marine organisms
Monitoring
  SA: Detection, Remote sensing, Sampling, Surveillance
Mortality
  SA: Acute effects, Toxicity
Motor oil
  S: Crankcase oil
Movement
  SA: Behavior, Drift, Spreading
Narragansett Bay
  SA: Massachusetts
Natural seepage
  SA: Santa Barbara Channel
Neuston
New Hampshire
New Jersey
New Mexico
New York
Niches
  SA: Ecosystems, Habitats
NOAA (National Oceanic and Atmospheric Adminstration
  SA: Government agencies, US government
North Carolina
North Sea
Norway
Oceans
  SA: Atlantic Ocean, Marine Environment, Pacific Ocean
OCS (Outer Continental Shelf)
  SA: Offshore development, Offshore drilling, Offshore exploration, Offshore production, Oil fields, Oil-gas leasing
Offloading
  S: Oil transfer, Ships, Tankers
Offshore development
  SA: Development
Offshore drilling
  SA: Drilling, Platforms

Offshore exploration
SA: Exploration
Offshore production
SA: Oil fields, Oil wells, Production
Oil
S: Crankcase oil, Crude oil, Fossil fuels, Fuel oil, Lubricating oil, Oil shale, Petroleum products, Residual oils, Tar, Tar sands, Waste oil, WSF
Oil discharges
SA: Leakage
Oil fields
SA: Production
Oil-gas leasing
SA: OCS, Offshore development
Oil industry
SA: Refineries
Oil removal
SA: Pollution control, Spill cleanup
Oil shale
SA: Extraction
Oil slicks
Oil spills
SA: Spill cleanup, Spill containment, Spill disposal, Spill removal, Spill response
Oil sands
S: Tar sands
Oil tanks
SA: Storage
Oil terminals
SA: Deepwater ports, Harbors, Oil transfer, Ports
Oil transfer
SA: Harbors, Ports
Oil transport
SA: Pipelines, Tankers
Oil-water separation
SA: Gravity separation, Waste oil treatment, Wastewater treatment
Oil wells
SA: Drilling, Offshore drilling, Offshore production, Oil fields, Production
Olympic Games spill
Onshore impacts
SA: Inland
Oregon
SA: Pacific Northwest
Oxidation
SA: Biodegradation, Weathering
Pacific coast
Pacific Northwest
Pacific Ocean
PAH (Polycyclic aromatic hydrocarbons)
SA: Aromatic hydrocarbons, Hydrocarbons
Patent
SA: Design-engineering, Equipment
Pennsylvania
Persian Gulf
Personnel training
SA: Contingency planning, Spill response
Petrochemicals
Petroleum
S: Hydrocarbons, Petroleum products
Petroleum industry
S: Oil industry, Refineries
Petroleum products
SA: Crankcase oil, Fuel oil, Fuels, Gasoline, Lubricating oil
pH control
SA: Chemical analysis
Philippines
Physical effects
SA: Behavior, Drift, Movement
Phytoplankton
SA: Algae, Microorganisms, Plankton
Pipelines
SA: Oil transfer, Oil transport, Trans-Alaskan Pipeline
Plankton
S: Microorganisms, Phytoplankton, Zooplankton
Plants
SA: Vegetation
Platforms
SA: Offshore drilling, Offshore exploration, Offshore production, Oil wells
Pollution control
Pollution prevention
SA: Environmental protection, Contingency planning
Polychaetes
SA: Annelids, Invertebrates, Marine organisms

Ports
SA: Deepwater ports, Harbors, Oil terminals
Portugal
Precipitation
SA: Sedimentation
Predictions
SA: Models, Spill trajectories
Product information
SA: Design-engineering, Equipment
Production
SA: Development, Drilling, exploration, Offshore production
Prudhoe Bay
SA: Alaska, Gulf of Alaska
Puerto Rico
Puget Sound
SA: Pacific Northwest, Washington
Reclamation
SA: Recycling, Reuse
Recovery
SA: Restoration
Recycling
SA: Reclamation, Reuse
Red Sea
Refineries
SA: Oil industry
Refining
Regulations
SA: Government agencies, Guidelines, International agreements, International conventions, Legislation
Release
SA: Growth, Metabolism, Uptake
Remote sensing
SA: Detection, Monitoring, Source identification, Surveillance
Reproduction
Residual oils
SA: Tar, Waste oil
Resource management
SA: Coastal zone management, Environmental management
Restoration
SA: Recovery
Reuse
SA: Reclamation, Recycling
Rhine River
Rhode Island
Risk analysis
SA: Economics
Rivers
SA: Freshwater, Inland, Streams
Russia
S: USSR
Safety
SA: Health hazards
Sampling
SA: Detection, Monitoring, Source identification
San Francisco Bay
SA: California
Santa Barbara Channel
SA: California
Sansinena spill
Sargasso Sea
SA: Atlantic Ocean
Saudi Arabia
Scotland
SA: UK
Seabirds
S: Birds
Sea surface
Seawater
SA: Marine environment, Oceans, Sea surface
Sedimentation
Sediments
SA: Soil
Segregated ballast
SA: Ballast, Crude oil washing, Tankers
Ships
SA: Tankers
Shorelines
SA: Beaches, Coasts
Sinking agents
Skimmers
SA: Design-engineering, Equipment, Spill cleanup
Sludge
SA: Activated sludge, Solid wastes
Social effects
Socioeconomic effects
SA: Economic effects
Soil
SA: Sediments
Solid wastes
SA: Disposal, Sludge
Solubility
Solution
Solvents
SA: Dispersants, Emulsifiers

Sorbents
SA: Absorption, Adsorption
Source identification
SA: Detection, Monitoring, Sampling, Surveillance
Sources
South Carolina
Soviet Union
S: USSR
Spain
Spectrometry
SA: Analytical techniques, Chemical analysis, GC/MS
Spectroscopy
SA: Analytical techniques, Chemical analysis
Spill cleanup
Spill containment
Spill cooperatives
SA: Contingency planning, Spill cleanup, Spill response
Spill disposal
Spill removal
Spill response
SA: Contingency planning, Spill cleanup, Spill cooperatives
Spill trajectories
SA: Drift, Models, Movement, Predictions
Spreading
SA: Behavior, Drift, Movement
St. Lawrence River
SA: Great Lakes
State governments
SA: Government agencies
Statistical analysis
Statistics
Storage
SA: Oil tanks
Strait of Gibraltar
SA: Chili
SA: Mediterranean Sea
Strait of Magellan
Strategic Petroleum Reserve
Streams
SA: Freshwater, Inland, Rivers
Subarctic regions
SA: Arctic
Sublethal effects
SA: Biological effects, Toxicity
Superports
S: Deepwater ports, Oil terminals, Ports
Supertankers
S: Tankers
Surfactants
SA: Dispersants, Emulsifiers
Surveillance
SA: Monitoring, Remote sensing
Sweden
Syria
Tank farms
SA: Oil tanks
Tankers
SA: Oil transport, Ships
Tar
SA: Residual oils
Tar sands
Texas
Torrey Canyon spill
Toxicity
SA: Acute effects, Biological effects
Trans-Alaska Pipeline
SA: Alaska
Tropical regions
Turkey
UK (United Kingdom)
Ultrafiltration
SA: Filtration
UN (United Nations)
SA: International agreements, International conventions
Uptake
SA: Growth, Metabolism, Release
Urquiola spill
US (United States)
USCG (US Coast Guard)
US Government
SA: Government agencies
USGS (US Geological Survey)
SA: Government agencies, US government
USN (US Navy)
USSR (Union of Soviet Socialist Republics)
Vegetation
SA: Plants
Venezuela
Vertebrates
SA: Animals, Birds, Marine mammals, Marine organisms
Vietnam
Virgin Islands
Virginia
Washington
SA: Pacific Northwest

Waste oil
  SA: Reclamation, Recycling, Residual oils
Waste oil disposal
Waste oil treatment
Wastewaters
Wastewater treatment
  SA: Oil-water separation
Waterfowl
  S: Birds
Water quality
  SA: Freshwater, Groundwater
Water soluble fraction
  S: WSF
Weathering
West Indies
Wildlife
  SA: Animals, Birds, Marine organisms, Marine mammals
WSF (Water soluble fraction)
  SA: Crude oil, Hydrocarbons, Solution
Yeasts
  SA: Microorganisms
Yugoslavia
Zooplankton
  SA: Microorganisms, Plankton

0490 ABSORPTION, MARINE MAMMALS, HYDROCARBONS , CONTAMINATION, CRUDE OIL, METABOLISM, UPTAKE, RELEASE, *PHOCA HISPIDA
0528 " PETROLEUM PRODUCTS, FISH, FOOD WEB, BIOLOGICAL EFFECTS, *TAINTING
0672 " OIL-WATER SEPARATION, PLATFORMS, SORBENTS, PATENT, *SORBENT ENDLESS CORD
R066 ACTIVATED SLUDGE, WASTEWATER TREATMENT, REFINERIES, CHEMICAL ANALYSIS, GC/MS, DOE, EPA, *ACTIVATED CARBON
0485 ACUTE EFFECTS, INVERTEBRATES, BENTHOS, CRUDE OIL, TOXICITY, SUBLETHAL EFFECTS, MORTALITY, SEDIMENTS, AMPHIPODS, ARCTIC
0488 " BIRDS, BIOLOGICAL EFFECTS, CHRONIC EFFECTS, TOXICITY, HYDROCARBONS , GROWTH, REPRODUCTION
R054 ADSORPTION, SOURCES, FATE, SEDIMENTS, MOVEMENT, PRODUCTION , CONTAMINANTS, ALASKA , *COOK INLET
0344 ALASKA , MONITORING, BASELINE STUDIES, MARINE ORGANISMS, ECOSYSTEMS, ENVIRONMENTAL EFFECTS, ALGAE, DEVELOPMENT
0433 " CONTINGENCY PLANNING, SPILL RESPONSE, PIPELINES, INLAND, TRANS-ALASKA PIPELINE, ICE, SPILL CONTAINMENT, SPILL CLEANUP, RESTORATION
0449 " SPILL RESPONSE, ICE, ARCTIC, SUBARCTIC REGIONS, SPILL CLEANUP,EQUIPMENT, BEHAVIOR, USCG
0458 " REGULATIONS, LEGISLATION, COST ANALYSIS, OIL SPILLS, COMPENSATION, ECONOMIC EFFECTS, US
0464 " OCS, ENVIRONMENTAL MANAGEMENT, REGULATIONS, LEGISLATION
0510 " TOXICITY, SUBLETHAL EFFECTS, MORTALITY, MARINE ORGANISMS, CRUSTACEANS, HYDROCARBONS
0511 " WSF, FUEL OIL, CRUDE OIL, TOXICITY, MARINE ORGANISMS, FISH, INVERTEBRATES, INTERTIDAL ZONE, BENTHOS, *PELAGIC ZONE
0516 " SUBLETHAL EFFECTS, MOLLUSKS, MARINE ORGANISMS, *MACOMA BALTHICA
0543 " OCS, ENVIRONMENTAL MANAGEMENT, NOAA, BLM, GOVERNMENT AGENCIES, MODELS, BASELINE STUDIES
0544 " BASELINE STUDIES, ENVIRONMENTAL EFFECTS, OIL-GAS LEASING, MARINE ENVIRONMENT, DEVELOPMENT
0556 " LIABILITY, LEGISLATION, COMPENSATION, FISHERIES, US GOVERNMENT
0559 " LIABILITY, LEGISLATION, US GOVERNMENT, STATE GOVERNMENTS, MARINE ENVIRONMENT
0602 " MODELS, PREDICTIONS, ENVIRONMENTAL EFFECTS, TANKERS, PORTS
0641 " ESTUARIES, POLLUTION CONTOL, DEVELOPMENT , PRODUCTION , OIL TRANSPORT, PIPELINES, TANKERS, COASTAL WATERS, INDUSTRIES
0643 " BIOLOGICAL EFFECTS, ECONOMIC EFFECTS, SOCIOECONOMIC EFFECTS, ENVIRONMENTAL MANAGEMENT, TANKERS, SAFETY, ECOSYSTEMS, LIABILITY, OCS, OIL INDUSTRY, POLLUTION CONTROL, FISHERIES, GULF OF ALASKA
0657 " PORTS , OIL TERMINALS, OIL TRANSPORT, INDUSTRIES, GOVERNMENT AGENCIES, SPILL RESPONSE, SPILL CLEANUP, CONTINGENCY PLANNING, USCG, *PORT VALDEZ
0661 " LEGISLATION, SAFETY, POLLUTION PREVENTION, ENVIRONMENTAL PROTECTION
0665 " USCG, TANKERS, SAFETY, US GOVERNMENT, REGULATIONS, LAW ENFORCEMENT, *VESSEL TRAFFIC SERVICE
0668 " BALLAST , OIL REMOVAL, WASTEWATER TREATMENT, MONITORING, ANALYTICAL TECHNIQUES, GRAVITY SEPARATION, FLOCCULATION, HYDROCARBONS , AROMATIC HYDROCARBONS
0678 " ECOSYSTEMS, ENVIRONMENTAL PROTECTION, OIL TRANSPORT, RESOURCE MANAGEMENT, COASTAL ZONE MANAGEMENT, *PUBLIC PARTICIPATION
R016 " ICE, BEHAVIOR, BASELINE STUDIES, DESIGN-ENGINEERING, SPILL RESPONSE, DEVELOPMENT , BEAUFORT SEA
R033 " OIL SPILLS, ARCTIC, ECOSYSTEMS, FRESHWATER, BIOLOGICAL EFFECTS, ALGAE, ZOOPLANKTON, BIOMASS, REPRODUCTION, UPTAKE, *TUNDRA PONDS
R036 " HYDROCARBONS , BIOLOGICAL EFFECTS, SUBLETHAL EFFECTS, MARINE ORGANISMS, FISH, UPTAKE, METABOLISM, TOXICITY, FOOD WEB, CHEMICAL ANALYSIS, DISPERSANTS, BASELINE STUDIES, *PATHOLOGY
R042 " HYDROCARBONS , DISTRIBUTION, CONCENTRATIONS, OFFSHORE DEVELOPMENT, OFFSHORE PRODUCTION, BASELINE STUDIES, ENVIRONMENTAL EFFECTS, BENTHOS, BEAUFORT SEA
R049 " BIODEGRADATION, MICROORGANISMS, CRUDE OIL, ICE, ARCTIC, BIOLOGICAL EFFECTS
R054 " ADSORPTION, SOURCES, FATE, SEDIMENTS, MOVEMENT, PRODUCTION , CONTAMINANTS, *COOK INLET
0344 ALGAE, ALASKA , MONITORING, BASELINE STUDIES, MARINE ORGANISMS, ECOSYSTEMS, ENVIRONMENTAL EFFECTS, DEVELOPMENT
0493 " HYDROCARBONS , TOXICITY, SOLUBILITY, BIOLOGICAL EFFECTS, *CELL MEMBRANE
0501 " MICROORGANISMS, PLANKTON, HYDROCARBONS , BACTERIA
0517 " CRUDE OIL, WSF, BIOLOGICAL EFFECTS, GROWTH, METABOLISM, *NAPHTHALENES, *CHLAMYDOMONAS ANGULOSA
R033 " ALASKA , OIL SPILLS, ARCTIC, ECOSYSTEMS, FRESHWATER, BIOLOGICAL EFFECTS, ZOOPLANKTON, BIOMASS, REPRODUCTION, UPTAKE, *TUNDRA PONDS
R035 " CARCINOGENS, HYDROCARBONS , MICROORGANISMS, METABOLISM, *PROTOZOA, *MICROSOMES, *MUTAGENS
0370 AMOCO CADIZ SPILL, CHEMICAL ANALYSIS, SAMPLING, PAH, GC/MS, AROMATIC HYDROCARBONS, OXIDATION, UPTAKE, MARINE ORGANISMS, SEDIMENTS, *MOUSSE
0402 " SPILL RESPONSE, SPILL CLEANUP, SPILL DISPOSAL, COASTS, SHORELINES, BEACHES, HARBORS, ESTUARIES, FRANCE
0404 " SPILL CLEANUP, SPILL REMOVAL, EQUIPMENT, SORBENTS, DISPERSANTS, BIODEGRADATION, EMULSIONS, *CHEMICAL AGENTS

0439 AMOCO CADIZ SPILL, SPILL RESPONSE, OIL SPILLS, EQUIPMENT, SPILL CLEANUP, CONTINGENCY PLANNING, FRANCE
0541 " OIL SPILLS, DISPERSANTS, RECOVERY, ENVIRONMENTAL EFFECTS, BIOLOGICAL EFFECTS, MARINE ORGANISMS, SPILL CLEANUP
0586 " SEDIMENTS, BAYS, DISTRIBUTION, CONCENTRATIONS, BEHAVIOR, FATE, FRANCE
0587 " FATE, BEHAVIOR, ESTUARIES, SHORELINES, COASTS, BEACHES, SEDIMENTS, PHYSICAL EFFECTS, FRANCE, *COASTAL PROCESSES, *VULNERABILITY INDEX
0480 AMPHIPODS, HYDROCARBONS , WSF, SEDIMENTS, UPTAKE, RELEASE, *NAPHTHALENES, *BIOMAGNIFICATION
0485 " ACUTE EFFECTS, INVERTEBRATES, BENTHOS, CRUDE OIL, TOXICITY, SUBLETHAL EFFECTS, MORTALITY, SEDIMENTS, ARCTIC
0355 ANALYTICAL TECHNIQUES, REMOTE SENSING, MOVEMENT, MONITORING, SURVEILLANCE, HYDROCARBONS , SPILL TRAJECTORIES, SEA SURFACE
0362 " SPECTROSCOPY, HYDROCARBONS , DISPERSANTS, OIL SPILLS, CHEMICAL ANALYSIS
0364 " SAMPLING, MONITORING, SURVEILLANCE, EQUIPMENT, CHEMICAL ANALYSIS, SPECTROMETRY, BIBLIOGRAPHIES
0365 " DETECTION, PAH, CHROMATOGRAPHY, CHEMICAL ANALYSIS, *UV PHOTOMETRY
0373 " DETECTION, TOXICITY, CONCENTRATIONS, *SPECTROPHOTOMETRY, *GRAVIMETRIC ANALYSIS
0375 " CHEMICAL ANALYSIS, WASTEWATERS, DETECTION, OIL-WATER SEPARATION, *IR
0378 " SOURCE IDENTIFICATION, NATURAL SEEPAGE, WEATHERING, SAMPLING, CHEMICAL ANALYSIS, SPECTROSCOPY
0379 " SOURCE IDENTIFICATION, SAMPLING, CHEMICAL ANALYSIS, HYDROCARBONS , CHROMATOGRAPHY, SPECTROSCOPY, *IR, *UV, *FLUORESCENCE
0380 " SOURCE IDENTIFICATION, CHROMATOGRAPHY, CHEMICAL ANALYSIS, HYDROCARBONS , FISH, FATE, ARGO MERCHANT SPILL, MASSACHUSETTS
0403 " DISPERSANTS, TOXICITY, OIL SLICKS, BEACHES, ENVIRONMENTAL EFFECTS, SPILL CLEANUP, BEACH CLEANUP, UK, *LICENSING
0545 " GUIDELINES, BASELINE STUDIES, MARINE ENVIRONMENT, POLLUTION CONTROL, SAMPLING, MARINE ORGANISMS
0563 " SOURCE IDENTIFICATION, BIOLOGICAL EFFECTS, PHYTOPLANKTON, FISH, CONCENTRATIONS, BALTIC SEA, SWEDEN, FINLAND, USSR, *TAGGING
0571 " TOXICITY, SUBLETHAL EFFECTS, SAMPLING, *LABORATORY DATA ANALYSIS, *FIELD APPLICATIONS
0610 " PREDICTIONS, MOVEMENT, PHYSICAL EFFECTS, SAMPLING, FATE, GULF OF MEXICO
0668 " ALASKA , BALLAST , OIL REMOVAL, WASTEWATER TREATMENT, MONITORING, GRAVITY SEPARATION, FLOCCULATION, HYDROCARBONS , AROMATIC HYDROCARBONS
R013 " MONITORING, DETECTION, EQUIPMENT, SURVEILLANCE
R014 " HYDROCARBONS , CONTAMINANTS, DETECTION, SOURCE IDENTIFICATION
R017 " OIL SPILLS, CRUDE OIL, REMOTE SENSING, DETECTION, SURVEILLANCE, MONITORING, WEATHERING, *AGING
R019 " HYDROCARBONS , SEDIMENTS, GC/MS, CHROMATOGRAPHY, MARINE ENVIRONMENT
R020 " SOURCE IDENTIFICATION, CRUDE OIL, HYDROCARBONS , SPECTROMETRY, CHROMATOGRAPHY, *IR
R038 " HYDROCARBONS , MARINE ORGANISMS, BIOLOGICAL EFFECTS, TOXICITY, ECOSYSTEMS, FATE, ENVIRONMENTAL EFFECTS, SUBARCTIC REGIONS, NOAA
R046 " CONTINGENCY PLANNING, OIL SPILLS, ENVIRONMENTAL EFFECTS, INFORMATION SYSTEMS, SPILL RESPONSE
R047 " TOXICITY, BIOLOGICAL EFFECTS, DETECTION, HYDROCARBONS , SAMPLING, CONCENTRATIONS, CARCINOGENS
R051 " BIODEGRADATION, BACTERIA, MICROORGANISMS, CHEMICAL ANALYSIS
R060 " HYDROCARBONS , FATE, DISTRIBUTION, BIOLOGICAL EFFECTS, CHEMICAL ANALYSIS, BUZZARDS BAY, *NEW YORK BIGHT
R068 " OIL-WATER SEPARATION, EQUIPMENT, DESIGN-ENGINEERING, FRANCE, *PERFORMANCE TESTING
0491 ANIMALS, OIL SPILLS, BIOLOGICAL EFFECTS, METABOLISM, MICROORGANISMS, PLANTS, FRESHWATER, SEAWATER, BIBLIOGRAPHIES
0526 " CONTAMINATION, OIL SPILLS, DISPERSION, MOVEMENT, *SEA TURTLES
R034 " MARINE MAMMALS, HABITATS, OIL SPILLS, BIOLOGICAL EFFECTS, ENVIRONMENTAL EFFECTS, MARINE ENVIRONMENT, *SEA OTTERS
R041 ANTARCTICA, BASELINE STUDIES, FOOD WEB, HYDROCARBONS , BIOGENIC HYDROCARBONS, OFFSHORE PRODUCTION, *KRILL
0422 API, SPILL CLEANUP, SKIMMERS, DISPERSANTS, OIL SLICKS, CALIFORNIA, *PETROLEUM CONTINGENCY ORGANIZATION, *FIELD TESTS
0503 " BIOLOGICAL EFFECTS, CRUDE OIL, CONTAMINATION, MARINE ORGANISMS, CHRONIC EFFECTS, BIOASSAY, *RESEARCH OVERVIEW
0592 AQUATIC ENVIRONMENT, FATE, BIODEGRADATION, PHYSICAL EFFECTS, CHEMICAL EFFECTS
0613 " AROMATIC HYDROCARBONS, TOXICITY, FISH, UPTAKE, FATE, *PNA
R044 " ENVIRONMENTAL EFFECTS, BIOASSAY, TOXICITY, WASTEWATERS, GREAT LAKES
0351 ARCTIC, REMOTE SENSING, MONITORING, TANKERS, OFFSHORE DEVELOPMENT, COASTAL WATERS, SURVEILLANCE, OIL SLICKS, SOURCES, *SURSAT SATELLITE SYSTEM
0385 " SPILL CONTAINMENT, BLOWOUTS, SPILL REMOVAL, EQUIPMENT, OCS, DESIGN-ENGINEERING, *UNDERWATER CONTAINMENT
0446 " SPILL RESPONSE, CONTINGENCY PLANNING, MODELS, MOVEMENT, SPREADING, ICE
0449 " ALASKA , SPILL RESPONSE, ICE, SUBARCTIC REGIONS, SPILL CLEANUP,EQUIPMENT, BEHAVIOR, USCG
0485 " AMPHIPODS, ACUTE EFFECTS, INVERTEBRATES, BENTHOS, CRUDE OIL, TOXICITY, SUBLETHAL EFFECTS, MORTALITY, SEDIMENTS

0492 ARCTIC, MARINE MAMMALS, SUBARCTIC REGIONS, BIOLOGICAL EFFECTS, TOXICITY, METABOLISM
0542 " BASELINE STUDIES, EIS, DRILLING , EXPLORATION , ENVIRONMENTAL EFFECTS, OIL FIELDS, SUBARCTIC REGIONS, CANADA
0612 " MODELS, OIL SPILLS, MOVEMENT, SPILL TRAJECTORIES, SEA SURFACE, PREDICTIONS, BEAUFORT SEA
0640 " BIOLOGICAL EFFECTS, PHYSICAL EFFECTS, ENVIRONMENTAL EFFECTS, BASELINE STUDIES, OIL SPILLS, SOCIOECONOMIC EFFECTS, MICROORGANISMS, FISH, FISHERIES, NORTH SEA, OCS, OFFSHORE DEVELOPMENT
R033 " ALGAE, ALASKA , OIL SPILLS, ECOSYSTEMS, FRESHWATER, BIOLOGICAL EFFECTS, ZOOPLANKTON, BIOMASS, REPRODUCTION, UPTAKE, *TUNDRA PONDS
R039 " BASELINE STUDIES, ICE, OCS, COASTS, SEDIMENTS, OIL SPILLS, FATE, PREDICTIONS, BEAUFORT SEA
R049 " ALASKA , BIODEGRADATION, MICROORGANISMS, CRUDE OIL, ICE, BIOLOGICAL EFFECTS
R055 " ICE, OIL SPILLS, FATE, MOVEMENT, PREDICTIONS, *POOLING
0360 ARGO MERCHANT SPILL, CHEMICAL ANALYSIS, HYDROCARBONS , BIOGENIC HYDROCARBONS, PAH, GC/MS, WSF, SEA SURFACE, SEDIMENTS, BENTHOS, MARINE ORGANISMS, ZOOPLANKTON, SOURCES, TANKERS, GEORGES BANK
0380 " ANALYTICAL TECHNIQUES, SOURCE IDENTIFICATION, CHROMATOGRAPHY, CHEMICAL ANALYSIS, HYDROCARBONS , FISH, FATE, MASSACHUSETTS
0453 " ENVIRONMENTAL EFFECTS, GUIDELINES, SPILL RESPONSE, CONTINGENCY PLANNING, *SCIENTIFIC RESPONSE
0507 " ENVIRONMENTAL EFFECTS, BIRDS, MARINE MAMMALS, CONTAMINATION, BASELINE STUDIES, MASSACHUSETTS
0538 " BENTHOS, MARINE ORGANISMS, FISH, ZOOPLANKTON, ENVIRONMENTAL EFFECTS, TANKERS, MASSACHUSETTS
0561 " OIL SPILLS, BIOLOGICAL EFFECTS, ECOSYSTEMS, TANKERS, MARINE ORGANISMS, WILDLIFE, EKOFISK BLOWOUT, SHIPS, SOCIOECONOMIC EFFECTS, MICROORGANISMS, TOXICITY, LEGISLATION
0600 " MODELS, OIL SPILLS, MOVEMENT, SPILL TRAJECTORIES, PREDICTIONS, SPREADING, DRIFT
0370 AROMATIC HYDROCARBONS, AMOCO CADIZ SPILL, CHEMICAL ANALYSIS, SAMPLING, PAH, GC/MS, OXIDATION, UPTAKE, MARINE ORGANISMS, SEDIMENTS, *MOUSSE
0483 " HYDROCARBONS , SEDIMENTS, MARINE ORGANISMS, CHRONIC EFFECTS, MARINE ENVIRONMENT, NORWAY
0498 " WSF, FUEL OIL, TOXICITY, MORTALITY, SUBLETHAL EFFECTS, RESPIRATION, GROWTH, DEVELOPMENT , METABOLISM, *RHITHROPANOPEUS HARISSI, *LIMULUS POLYPHEMUS
0504 " MARSHES, ECOSYSTEMS, HYDROCARBONS , BENTHOS, BIOINDICATORS, INVERTEBRATES, CHEMICAL ANALYSIS, OIL DISCHARGES, MONITORING, *BIOMAGNIFICATION
0509 " CARCINOGENS, SOURCES, BIOLOGICAL EFFECTS, FOOD WEB, MARINE ORGANISMS, MARINE ENVIRONMENT, *AHH
0613 " AQUATIC ENVIRONMENT, TOXICITY, FISH, UPTAKE, FATE, *PNA
0668 " ANALYTICAL TECHNIQUES, ALASKA , BALLAST , OIL REMOVAL, WASTEWATER TREATMENT, MONITORING, GRAVITY SEPARATION, FLOCCULATION, HYDROCARBONS
R018 " CONTAMINANTS, DETECTION, SEDIMENTS, CHEMICAL ANALYSIS, PUGET SOUND, WASHINGTON
R050 " BIODEGRADATION, MICROORGANISMS, BACTERIA, PAH, LAKE S, RIVERS, *GENETIC ENGINEERING, *PSUEDOMONAS
R064 " OIL SHALE, REFINING, WASTEWATERS, BIOLOGICAL TREATMENT, POLLUTION CONTROL
0632 ATLANTIC COAST, ONSHORE IMPACTS, OCS, OFFSHORE DEVELOPMENT
R040 " RISK ANALYSIS, OIL SPILLS, ENVIRONMENTAL EFFECTS, OCS, OFFSHORE DEVELOPMENT, MODELS
0442 ATLANTIC OCEAN, SPILL COOPERATIVES, CONTINGENCY PLANNING, SPILL CLEANUP, SPILL RESPONSE, EQUIPMENT, PERSONNEL TRAINING, OCS
0608 " MODELS, OIL SPILLS, FISHERIES, PREDICTIONS, BIOLOGICAL EFFECTS, BEHAVIOR, FATE, FISH, SPREADING, DRIFT, MOVEMENT, GEORGES BANK, *COD
0644 " FISHERIES, OCS, OFFSHORE DEVELOPMENT, REGULATIONS, ENVIRONMENTAL EFFECTS, ONSHORE IMPACTS, OIL INDUSTRY, SOCIOECONOMIC EFFECTS
0448 AUSTRALIA, CONTINGENCY PLANNING, SPILL CLEANUP, DISPERSANTS, POLLUTION CONTROL, FOREIGN GOVERNMENTS, OIL INDUSTRY
0471 " POLLUTION PREVENTION, POLLUTION CONTROL, FOREIGN GOVERNMENTS, *PROCEEDINGS
0478 " POLLUTION PREVENTION, POLLUTION CONTROL, MARINE ENVIRONMENT
0501 BACTERIA, ALGAE, MICROORGANISMS, PLANKTON, HYDROCARBONS
0514 " DISPERSANTS, BIOLOGICAL EFFECTS, FRESHWATER, ZOOPLANKTON, FUNGI, MICROORGANISMS
0515 " FRESHWATER, CRUDE OIL, OIL SPILLS, PLANKTON, BIOLOGICAL EFFECTS, ICE, ECOSYSTEMS
0578 " BIODEGRADATION, MICROORGANISMS, HYDROCARBONS , METABOLISM, GROWTH, OXIDATION, *CYCLOHEXANOL
0579 " BIODEGRADATION, MICROORGANISMS, HYDROCARBONS , CRUDE OIL, SPILL CLEANUP, *PLASMID TRANSFER, *GENETIC ENGINEERING, *PSEUDOMONAS
0580 " BIODEGRADATION, MICROORGANISMS, *N-PARAFFINS
0582 " BIODEGRADATION, MICROORGANISMS, HYDROCARBONS , METABOLISM, GROWTH, *BUTADIENE
0677 " CONTAMINANTS, SEAWATER, COASTAL WATERS, *ADRIATIC SEA, *, *VALORIZATION
R010 " DETECTION, HYDROCARBONS , BILGES, WASTEWATERS, POLLUTION CONTROL, *ENZYME ELECTRODE
R012 " BIOINDICATORS, MICROORGANISMS, BIOLOGICAL EFFECTS, SUBLETHAL EFFECTS, MARINE ENVIRONMENT, *CHEMOTAXIS
R050 " AROMATIC HYDROCARBONS, BIODEGRADATION, MICROORGANISMS, PAH, LAKE S, RIVERS, *GENETIC ENGINEERING, *PSUEDOMONAS
R051 " ANALYTICAL TECHNIQUES, BIODEGRADATION, MICROORGANISMS, CHEMICAL ANALYSIS
R052 " BIODEGRADATION, MICROORGANISMS, CRUDE OIL, MARINE ENVIRONMENT, ESTUARIES, SEDIMENTS

0476 BALLAST , OIL-WATER SEPARATION, EQUIPMENT, POLLUTION PREVENTION, TANKERS, FILTRATION, DESIGN-ENGINEERING
0668 " AROMATIC HYDROCARBONS, ANALYTICAL TECHNIQUES, ALASKA , OIL REMOVAL, WASTEWATER TREATMENT, MONITORING, GRAVITY SEPARATION, FLOCCULATION, HYDROCARBONS
0348 BALTIC SEA, MONITORING, CHEMICAL ANALYSIS
0371 " CHEMICAL ANALYSIS, CONCENTRATIONS, SPECTROSCOPY, *IR
0563 " ANALYTICAL TECHNIQUES, SOURCE IDENTIFICATION, BIOLOGICAL EFFECTS, PHYTOPLANKTON, FISH, CONCENTRATIONS, SWEDEN, FINLAND, USSR, *TAGGING
0572 " CRUDE OIL, PETROLEUM PRODUCTS, CONTAMINATION
0495 BARENTS SEA, WSF, CRUDE OIL, FISH, BIOLOGICAL EFFECTS, REPRODUCTION, *HATCHING
0344 BASELINE STUDIES, ALGAE, ALASKA , MONITORING, MARINE ORGANISMS, ECOSYSTEMS, ENVIRONMENTAL EFFECTS, DEVELOPMENT
0507 " ARGO MERCHANT SPILL, ENVIRONMENTAL EFFECTS, BIRDS, MARINE MAMMALS, CONTAMINATION, MASSACHUSETTS
0512 " INVERTEBRATES, BENTHOS, HYDROCARBONS , CONTAMINATION, SAMPLING, OCS, CALIFORNIA
0529 " SOCIOECONOMIC EFFECTS, OIL SPILLS, COST ANALYSIS, MODELS, PREDICTIONS
0542 " ARCTIC, EIS, DRILLING , EXPLORATION , ENVIRONMENTAL EFFECTS, OIL FIELDS, SUBARCTIC REGIONS, CANADA
0543 " ALASKA , OCS, ENVIRONMENTAL MANAGEMENT, NOAA, BLM, GOVERNMENT AGENCIES, MODELS
0544 " ALASKA , ENVIRONMENTAL EFFECTS, OIL-GAS LEASING, MARINE ENVIRONMENT, DEVELOPMENT
0545 " ANALYTICAL TECHNIQUES, GUIDELINES, MARINE ENVIRONMENT, POLLUTION CONTROL, SAMPLING, MARINE ORGANISMS
0547 " ENVIRONMENTAL PROTECTION, ENVIRONMENTAL MANAGEMENT, DEVELOPMENT , OIL INDUSTRY, RISK ANALYSIS, PERSIAN GULF, KUWAIT, *UNEP
0550 " PHYTOPLANKTON, ZOOPLANKTON, BENTHOS, OIL TRANSFER, SHIPS, DELAWARE BAY
0640 " ARCTIC, BIOLOGICAL EFFECTS, PHYSICAL EFFECTS, ENVIRONMENTAL EFFECTS, OIL SPILLS, SOCIOECONOMIC EFFECTS, MICROORGANISMS, FISH, FISHERIES, NORTH SEA, OCS, OFFSHORE DEVELOPMENT
R016 " ALASKA , ICE, BEHAVIOR, DESIGN-ENGINEERING, SPILL RESPONSE, DEVELOPMENT , BEAUFORT SEA
R036 " ALASKA , HYDROCARBONS , BIOLOGICAL EFFECTS, SUBLETHAL EFFECTS, MARINE ORGANISMS, FISH, UPTAKE, METABOLISM, TOXICITY, FOOD WEB, CHEMICAL ANALYSIS, DISPERSANTS, *PATHOLOGY
R039 " ARCTIC, ICE, OCS, COASTS, SEDIMENTS, OIL SPILLS, FATE, PREDICTIONS, BEAUFORT SEA
R041 " ANTARCTICA, FOOD WEB, HYDROCARBONS , BIOGENIC HYDROCARBONS, OFFSHORE PRODUCTION, *KRILL
R042 " ALASKA , HYDROCARBONS , DISTRIBUTION, CONCENTRATIONS, OFFSHORE DEVELOPMENT, OFFSHORE PRODUCTION, ENVIRONMENTAL EFFECTS, BENTHOS, BEAUFORT SEA
0369 BAYS, WATER QUALITY, CONTAMINANTS, SOURCES, CHEMICAL ANALYSIS, JAPAN
0560 " ENVIRONMENTAL EFFECTS, FISH, WILDLIFE, MARSHES, SPILL CLEANUP, SHIPS, ST. LAWRENCE RIVER, *NEPCO 140 SPILL
0586 " AMOCO CADIZ SPILL, SEDIMENTS, DISTRIBUTION, CONCENTRATIONS, BEHAVIOR, FATE, FRANCE
0403 BEACH CLEANUP, ANALYTICAL TECHNIQUES, DISPERSANTS, TOXICITY, OIL SLICKS, BEACHES, ENVIRONMENTAL EFFECTS, SPILL CLEANUP, UK, *LICENSING
0402 BEACHES, AMOCO CADIZ SPILL, SPILL RESPONSE, SPILL CLEANUP, SPILL DISPOSAL, COASTS, SHORELINES, HARBORS, ESTUARIES, FRANCE
0403 " BEACH CLEANUP, ANALYTICAL TECHNIQUES, DISPERSANTS, TOXICITY, OIL SLICKS, ENVIRONMENTAL EFFECTS, SPILL CLEANUP, UK, *LICENSING
0406 " DISPERSANTS, ENVIRONMENTAL EFFECTS, SPILL CLEANUP, FATE, SEDIMENTS, CRUDE OIL, BRAZIL, *BRAZILIAN MARINA SPILL
0425 " SPILL CLEANUP, EQUIPMENT, DISPERSANTS, INTERTIDAL ZONE, ENVIRONMENTAL EFFECTS, ECONOMICS, SHORELINES
0426 " SPILL CLEANUP, ENVIRONMENTAL EFFECTS, SPILL RESPONSE, RESTORATION, MARINE MAMMALS, MARSHES
0567 " OIL SPILLS, ENVIRONMENTAL EFFECTS, METULA SPILL, STRAIT OF MAGELLAN, TANKERS, MARSHES, CHILE
0587 " AMOCO CADIZ SPILL, FATE, BEHAVIOR, ESTUARIES, SHORELINES, COASTS, SEDIMENTS, PHYSICAL EFFECTS, FRANCE, *COASTAL PROCESSES, *VULNERABILITY INDEX
0590 " DISPERSANTS, CRUDE OIL, FUEL OIL, BEHAVIOR, SHORELINES, SEDIMENTS
0593 " CHEMICAL ANALYSIS, FATE, SEDIMENTS, HYDROCARBONS , *ARROW SPILL
0623 " TAR, NATURAL SEEPAGE, FATE, DISTRIBUTION, SEDIMENTS, BIOLOGICAL EFFECTS, MARINE ORGANISMS, INTERTIDAL ZONE, CALIFORNIA, SANTA BARBARA CHANNEL
0356 BEAUFORT SEA, REMOTE SENSING, OIL SPILLS, SURVEILLANCE, EQUIPMENT
0441 " SPILL RESPONSE, CONTINGENCY PLANNING, GOVERNMENT AGENCIES, CANADA, *BREX III FIELD EXERCISE
0447 " CONTINGENCY PLANNING, SPILL CLEANUP, SPILL RESPONSE, INDUSTRIES, POLLUTION CONTROL, CANADA
0576 " OIL SPILLS, SPILL RESPONSE, CONTINGENCY PLANNING, ENVIRONMENTAL EFFECTS, FATE, MOVEMENT, BIOLOGICAL EFFECTS, TOXICITY, PLANKTON, MARINE MAMMALS, FISH, BIRDS, *SCIENTIFIC RESPONSE
0612 " ARCTIC, MODELS, OIL SPILLS, MOVEMENT, SPILL TRAJECTORIES, SEA SURFACE, PREDICTIONS
R016 " BASELINE STUDIES, ALASKA , ICE, BEHAVIOR, DESIGN-ENGINEERING, SPILL RESPONSE, DEVELOPMENT
R039 " BASELINE STUDIES, ARCTIC, ICE, OCS, COASTS, SEDIMENTS, OIL SPILLS, FATE, PREDICTIONS

R042 BEAUFORT SEA, BASELINE STUDIES, ALASKA , HYDROCARBONS , DISTRIBUTION, CONCENTRATIONS, OFFSHORE DEVELOPMENT, OFFSHORE PRODUCTION, ENVIRONMENTAL EFFECTS, BENTHOS
R059 " MODELS, ICE, MOVEMENT, SPILL TRAJECTORIES, REMOTE SENSING, OFFSHORE DEVELOPMENT, RISK ANALYSIS, *RADAR
0389 BEHAVIOR, SPILL CONTAINMENT, BOOMS, OIL SLICKS, MODELS, EQUIPMENT, PHYSICAL EFFECTS
0449 " ARCTIC, ALASKA , SPILL RESPONSE, ICE, SUBARCTIC REGIONS, SPILL CLEANUP,EQUIPMENT, USCG
0494 " TOXICITY, FUEL OIL, WSF, SUBLETHAL EFFECTS, MOLLUSKS, *FEEDING, *CHEMORECEPTION, *ILYANASSA OBSOLETA
0522 " FISH, UPTAKE, WSF, CRUDE OIL, GROWTH, CHRONIC EFFECTS, BIOLOGICAL EFFECTS, FISH, DEVELOPMENT , *PLATICHTHYS STELLATUS
0535 " RECOVERY, SPILL CLEANUP, PHYSICAL EFFECTS, FATE, MOVEMENT, OIL SPILLS, METULA SPILL, STRAIT OF MAGELLAN
0586 " BAYS, AMOCO CADIZ SPILL, SEDIMENTS, DISTRIBUTION, CONCENTRATIONS, FATE, FRANCE
0587 " BEACHES, AMOCO CADIZ SPILL, FATE, ESTUARIES, SHORELINES, COASTS, SEDIMENTS, PHYSICAL EFFECTS, FRANCE, *COASTAL PROCESSES, *VULNERABILITY INDEX
0588 " DISPERSANTS, PHYSICAL EFFECTS, EMULSIONS
0589 " OIL SLICKS, DISPERSION, *RAINFALL, *ENTRAINMENT
0590 " BEACHES, DISPERSANTS, CRUDE OIL, FUEL OIL, SHORELINES, SEDIMENTS
0595 " MODELS, BLOWOUTS, FATE, OFFSHORE DEVELOPMENT
0597 " MODELS, FATE, OIL SPILLS, SPILL RESPONSE, SPILL CLEANUP, DISPERSANTS, RISK ANALYSIS, SOURCE IDENTIFICATION, ENVIRONMENTAL EFFECTS
0601 " ESTUARIES, MODELS, SPREADING, MOVEMENT, PREDICTIONS, PHYSICAL EFFECTS, *TIDAL SIMULATIONS
0606 " OIL SLICKS, SPILL CONTAINMENT, MOVEMENT, PHYSICAL EFFECTS
0608 " ATLANTIC OCEAN, MODELS, OIL SPILLS, FISHERIES, PREDICTIONS, BIOLOGICAL EFFECTS, FATE, FISH, SPREADING, DRIFT, MOVEMENT, GEORGES BANK, *COD
0624 " OIL SPILLS, FATE, MODELS, BIODEGRADATION, BIOLOGICAL EFFECTS, MOLLUSKS, FISHERIES, *RESEARCH PROGRAM
R016 " BEAUFORT SEA, BASELINE STUDIES, ALASKA , ICE, DESIGN-ENGINEERING, SPILL RESPONSE, DEVELOPMENT
R028 " SPILL RESPONSE, INFORMATION SYSTEMS, SPILL TRAJECTORIES, PHYSICAL EFFECTS, FATE, CHEMICAL EFFECTS, CHEMICAL ANALYSIS, BIOLOGICAL EFFECTS, *SCIENTIFIC RESPONSE
R031 " OIL SHALE, CORALS, BIOLOGICAL EFFECTS, CARCINOGENS, METABOLISM, GULF OF MEXICO, *DRILLING FLUIDS
R037 " FISH, MARINE ENVIRONMENT, BIOLOGICAL EFFECTS, ENVIRONMENTAL EFFECTS, REPRODUCTION, GROWTH, TOXICITY, MONITORING
R057 " MODELS, OIL SLICKS, PREDICTIONS, FATE, SANTA BARBARA CHANNEL
0343 BENTHOS, MONITORING, INVERTEBRATES, OFFSHORE DEVELOPMENT, OIL FIELDS, NORTH SEA
0347 " BIOINDICATORS, FISH, HYDROCARBONS , CHEMICAL ANALYSIS, CHROMATOGRAPHY, DISTRIBUTION, SEDIMENTS, NATURAL SEEPAGE, OCS, CALIFORNIA, SANTA BARBARA CHANNEL
0360 " ARGO MERCHANT SPILL, CHEMICAL ANALYSIS, HYDROCARBONS , BIOGENIC HYDROCARBONS, PAH, GC/MS, WSF, SEA SURFACE, SEDIMENTS, MARINE ORGANISMS, ZOOPLANKTON, SOURCES, TANKERS, GEORGES BANK
0481 " CHRONIC EFFECTS, CRUDE OIL, MARINE ORGANISMS, INVERTEBRATES, HYDROCARBONS , SEDIMENTS, BIODEGRADATION, UPTAKE
0482 " BIOLOGICAL EFFECTS, INVERTEBRATES, INTERTIDAL ZONE, SHIPS, FUEL OIL, CHESAPEAKE BAY, *BARGE STC-101 SPILL
0485 " ARCTIC, AMPHIPODS, ACUTE EFFECTS, INVERTEBRATES, CRUDE OIL, TOXICITY, SUBLETHAL EFFECTS, MORTALITY, SEDIMENTS
0504 " AROMATIC HYDROCARBONS, MARSHES, ECOSYSTEMS, HYDROCARBONS , BIOINDICATORS, INVERTEBRATES, CHEMICAL ANALYSIS, OIL DISCHARGES, MONITORING, *BIOMAGNIFICATION
0505 " BIOLOGICAL EFFECTS, INVERTEBRATES, DISTRIBUTION, DEVELOPMENT , COASTAL WATERS, ESTUARIES
0511 " ALASKA , WSF, FUEL OIL, CRUDE OIL, TOXICITY, MARINE ORGANISMS, FISH, INVERTEBRATES, INTERTIDAL ZONE, *PELAGIC ZONE
0512 " BASELINE STUDIES, INVERTEBRATES, HYDROCARBONS , CONTAMINATION, SAMPLING, OCS, CALIFORNIA
0518 " NATURAL SEEPAGE, SEDIMENTS, CRUDE OIL, BIOLOGICAL EFFECTS, MARINE ORGANISMS, SANTA BARBARA CHANNEL
0519 " BIOLOGICAL EFFECTS, INVERTEBRATES, MOLLUSKS, MORTALITY, COASTS, CRUDE OIL, URQUIOLA SPILL, SPAIN
0525 " FISH, MOLLUSKS, BIOLOGICAL EFFECTS, CONTAMINATION, SAMPLING, HYDROCARBONS , EKOFISK BLOWOUT, NORTH SEA
0538 " ARGO MERCHANT SPILL, MARINE ORGANISMS, FISH, ZOOPLANKTON, ENVIRONMENTAL EFFECTS, TANKERS, MASSACHUSETTS
0550 " BASELINE STUDIES, PHYTOPLANKTON, ZOOPLANKTON, OIL TRANSFER, SHIPS, DELAWARE BAY
0570 " PIPELINES, OIL SPILLS, MARSHES, BIOLOGICAL EFFECTS, PLANTS, MONITORING, SPILL CLEANUP, TEXAS
0618 " CONTAMINATION, SEDIMENTS, HYDROCARBONS , CHEMICAL ANALYSIS, GC/MS, EKOFISK BLOWOUT, NORTH SEA
0619 " FUEL OIL, FATE, SEDIMENTS, HARBORS, SEDIMENTATION, INCINERATION, DISTRIBUTION, CHEMICAL EFFECTS, CALIFORNIA, SANSINENA SPILL
R042 " BEAUFORT SEA, BASELINE STUDIES, ALASKA , HYDROCARBONS , DISTRIBUTION, CONCENTRATIONS, OFFSHORE DEVELOPMENT, OFFSHORE PRODUCTION, ENVIRONMENTAL EFFECTS

WATERS, MODELS
0364 BIBLIOGRAPHIES, ANALYTICAL TECHNIQUES, SAMPLING, MONITORING, SURVEILLANCE, EQUIPMENT, CHEMICAL ANALYSIS, SPECTROMETRY
0491 " ANIMALS, OIL SPILLS, BIOLOGICAL EFFECTS, METABOLISM, MICROORGANISMS, PLANTS, FRESHWATER, SEAWATER
0549 " OCS, OFFSHORE DEVELOPMENT, ENVIRONMENTAL EFFECTS, SOCIOECONOMIC EFFECTS, ONSHORE IMPACTS, OIL-GAS LEASING, TEXAS
0625 " SOCIOECONOMIC EFFECTS, OCS, OFFSHORE DEVELOPMENT, OIL-GAS LEASING, ECONOMICS, NORTH SEA, ONSHORE IMPACTS
0634 " OCS, OFFSHORE DEVELOPMENT, COASTAL ZONE MANAGEMENT, OIL SPILLS, BLM
0656 " PIPELINES, ENVIRONMENTAL EFFECTS, OFFSHORE DEVELOPMENT, OCS, OIL TRANSPORT, OIL TRANSFER, COST ANALYSIS
0680 " PACIFIC COAST, OCS, OFFSHORE DEVELOPMENT, CALIFORNIA, *ENVIRONMENTAL INFORMATION, *LITERATURE REVIEW
R010 BILGES, BACTERIA, DETECTION, HYDROCARBONS , WASTEWATERS, POLLUTION CONTROL, *ENZYME ELECTRODE
0503 BIOASSAY, API, BIOLOGICAL EFFECTS, CRUDE OIL, CONTAMINATION, MARINE ORGANISMS, CHRONIC EFFECTS, *RESEARCH OVERVIEW
0523 " BIOLOGICAL EFFECTS, INTERTIDAL ZONE, MARINE ORGANISMS, MOLLUSKS, POLYCHAETES, UPTAKE
R044 " AQUATIC ENVIRONMENT, ENVIRONMENTAL EFFECTS, TOXICITY, WASTEWATERS, GREAT LAKES
R061 " HYDROCARBONS , PETROCHEMICALS, TOXICITY, ECOSYSTEMS, OFFSHORE PRODUCTION, DRILLING , *DRILLING MUDS
0404 BIODEGRADATION, AMOCO CADIZ SPILL, SPILL CLEANUP, SPILL REMOVAL, EQUIPMENT, SORBENTS, DISPERSANTS, EMULSIONS, *CHEMICAL AGENTS
0479 " SPILL CONTAINMENT, SPILL CLEANUP, POLLUTION PREVENTION, SHIPS, TANKERS, SOURCES, STATISTICS, DISPERSION, OIL SLICKS, SPREADING, EQUIPMENT
0481 " BENTHOS, CHRONIC EFFECTS, CRUDE OIL, MARINE ORGANISMS, INVERTEBRATES, HYDROCARBONS , SEDIMENTS, UPTAKE
0540 " MONITORING, CHROMATOGRAPHY, ONSHORE IMPACTS, ENVIRONMENTAL EFFECTS, SEDIMENTS, INTERTIDAL ZONE, BIOLOGICAL EFFECTS, RESTORATION, TROPICAL REGIONS, RECOVERY, PUERTO RICO
0577 " CRUDE OIL, DISPERSANTS, MICROORGANISMS, PREDICTIONS, HYDROS
0578 " BACTERIA, MICROORGANISMS, HYDROCARBONS , METABOLISM, GROWTH, OXIDATION, *CYCLOHEXANOL
0579 " BACTERIA, MICROORGANISMS, HYDROCARBONS , CRUDE OIL, SPILL CLEANUP, *PLASMID TRANSFER, *GENETIC ENGINEERING, *PSEUDOMONAS
0580 " BACTERIA, MICROORGANISMS, *N-PARAFFINS
0581 " HYDROCARBONS , SOIL, MODELS, RESPIRATION, EMULSIONS, GROUNDWATER, CHEMICAL ANALYSIS
0582 " BACTERIA, MICROORGANISMS, HYDROCARBONS , METABOLISM, GROWTH, *BUTADIENE
0592 " AQUATIC ENVIRONMENT, FATE, PHYSICAL EFFECTS, CHEMICAL EFFECTS
0616 " FATE, EVAPORATION, SEDIMENTATION, SOLUTION, WEATHERING, FUEL OIL, HYDROCARBONS , MARINE ENVIRONMENT, ANALYTICAL TECHNQIUES, CHROMATOGRAPHY
0624 " BEHAVIOR, OIL SPILLS, FATE, MODELS, BIOLOGICAL EFFECTS, MOLLUSKS, FISHERIES, *RESEARCH PROGRAM
0671 " WASTE OIL, DISPOSAL , LAND FARMING, SLUDGE
R049 " ARCTIC, ALASKA , MICROORGANISMS, CRUDE OIL, ICE, BIOLOGICAL EFFECTS
R050 " BACTERIA, AROMATIC HYDROCARBONS, MICROORGANISMS, PAH, LAKE S, RIVERS, *GENETIC ENGINEERING, *PSUEDOMONAS
R051 " BACTERIA, ANALYTICAL TECHNIQUES, MICROORGANISMS, CHEMICAL ANALYSIS
R052 " BACTERIA, MICROORGANISMS, CRUDE OIL, MARINE ENVIRONMENT, ESTUARIES, SEDIMENTS
R053 " HYDROCARBONS , DECOMPOSITION, MARINE ENVIRONMENT, RECOVERY
0360 BIOGENIC HYDROCARBONS, BENTHOS, ARGO MERCHANT SPILL, CHEMICAL ANALYSIS, HYDROCARBONS , PAH, GC/MS, WSF, SEA SURFACE, SEDIMENTS, MARINE ORGANISMS, ZOOPLANKTON, SOURCES, TANKERS, GEORGES BANK
R041 " BASELINE STUDIES, ANTARCTICA, FOOD WEB, HYDROCARBONS , OFFSHORE PRODUCTION, *KRILL
0345 BIOINDICATORS, DETECTION, MICROORGANISMS, SOURCE IDENTIFICATION, UPTAKE, TOXICITY, CONTAMINATION, CONCENTRATIONS, *PROTOZOA
0346 " DETECTION, MICROORGANISMS, CONTAMINATION, TOXICITY, UPTAKE, *PROTOZOA, *EUPLOTES DIADALEOS
0347 " BENTHOS, FISH, HYDROCARBONS , CHEMICAL ANALYSIS, CHROMATOGRAPHY, DISTRIBUTION, SEDIMENTS, NATURAL SEEPAGE, OCS, CALIFORNIA, SANTA BARBARA CHANNEL
0504 " BENTHOS, AROMATIC HYDROCARBONS, MARSHES, ECOSYSTEMS, HYDROCARBONS , INVERTEBRATES, CHEMICAL ANALYSIS, OIL DISCHARGES, MONITORING, *BIOMAGNIFICATION
R011 " MONITORING, CONTAMINATION, BIOLOGICAL EFFECTS
R012 " BACTERIA, MICROORGANISMS, BIOLOGICAL EFFECTS, SUBLETHAL EFFECTS, MARINE ENVIRONMENT, *CHEMOTAXIS
0376 BIOLOGICAL EFFECTS, OIL SPILLS, SAMPLING, SEDIMENTS, GC/MS, WEATHERING, CONCENTRATIONS, ONSHORE IMPACTS, CHEMICAL ANALYSIS, METULA SPILL, STRAIT OF MAGELLAN, CHILE
0465 " INTERNATIONAL CONVENTIONS, REGULATIONS, IMCO, OIL TRANSPORT, TANKERS, SOURCES, FATE, *LONDON DUMPING CONVENTION
0482 " BENTHOS, INVERTEBRATES, INTERTIDAL ZONE, SHIPS, FUEL OIL, CHESAPEAKE BAY, *BARGE STC-101 SPILL

0484 BIOLOGICAL EFFECTS, BIRDS, ESTUARIES
0486 " MICROORGANISMS, *COMMUNITY STRUCTURE, *DIATOMS
0487 " HYDROCARBONS , TOXICITY
0488 " ACUTE EFFECTS, BIRDS, CHRONIC EFFECTS, TOXICITY, HYDROCARBONS , GROWTH, REPRODUCTION
0489 " CRUDE OIL, WSF, CONCENTRATIONS, METABOLISM, MORTALITY, REPRODUCTION, GROWTH, CRUSTACEANS, *CRANGON CRANGON
0491 " BIBLIOGRAPHIES, ANIMALS, OIL SPILLS, METABOLISM, MICROORGANISMS, PLANTS, FRESHWATER, SEAWATER
0492 " ARCTIC, MARINE MAMMALS, SUBARCTIC REGIONS, TOXICITY, METABOLISM
0493 " ALGAE, HYDROCARBONS , TOXICITY, SOLUBILITY, *CELL MEMBRANE
0495 " BARENTS SEA, WSF, CRUDE OIL, FISH, REPRODUCTION, *HATCHING
0497 " FISH, HYDROCARBONS , FUEL OIL, CONTAMINATION, REPRODUCTION, SUBLETHAL EFFECTS, GROWTH, DEVELOPMENT , *PSEUDOPLEURONECTES AMERICANUS
0502 " PETROLEUM PRODUCTS, MARINE ORGANISMS, BLACK SEA
0503 " BIOASSAY, API, CRUDE OIL, CONTAMINATION, MARINE ORGANISMS, CHRONIC EFFECTS, *RESEARCH OVERVIEW
0505 " BENTHOS, INVERTEBRATES, DISTRIBUTION, DEVELOPMENT , COASTAL WATERS, ESTUARIES
0506 " SUBLETHAL EFFECTS, CRUDE OIL, HYDROCARBONS , INVERTEBRATES, CRUSTACEANS, *HISTOLOGY, *PENAEUS AZTECUS
0508 " TOXICITY, CRUDE OIL, DISPERSANTS, MORTALITY, SUBLETHAL EFFECTS, MOLLUSKS, *ARGOPECTEN IRRADIANS
0509 " AROMATIC HYDROCARBONS, CARCINOGENS, SOURCES, FOOD WEB, MARINE ORGANISMS, MARINE ENVIRONMENT, *AHH
0513 " OIL SPILLS, ZOOPLANKTON, DISTRIBUTION, BIOMASS, HYDROCARBONS , ESTUARIES
0514 " BACTERIA, DISPERSANTS, FRESHWATER, ZOOPLANKTON, FUNGI, MICROORGANISMS
0515 " BACTERIA, FRESHWATER, CRUDE OIL, OIL SPILLS, PLANKTON, ICE, ECOSYSTEMS
0517 " ALGAE, CRUDE OIL, WSF, GROWTH, METABOLISM, *NAPHTHALENES, *CHLAMYDOMONAS ANGULOSA
0518 " BENTHOS, NATURAL SEEPAGE, SEDIMENTS, CRUDE OIL, MARINE ORGANISMS, SANTA BARBARA CHANNEL
0519 " BENTHOS, INVERTEBRATES, MOLLUSKS, MORTALITY, COASTS, CRUDE OIL, URQUIOLA SPILL, SPAIN
0520 " METULA SPILL, INTERTIDAL ZONE, INVERTEBRATES, DISTRIBUTION, COASTS, SPAIN
0521 " OIL SPILLS, RECOVERY, MORTALITY, INTERTIDAL ZONE, INVERTEBRATES, DETECTION, METULA SPILL, STRAIT OF MAGELLAN, CHILE
0522 " BEHAVIOR, FISH, UPTAKE, WSF, CRUDE OIL, GROWTH, CHRONIC EFFECTS, FISH, DEVELOPMENT , *PLATICHTHYS STELLATUS
0523 " BIOASSAY, INTERTIDAL ZONE, MARINE ORGANISMS, MOLLUSKS, POLYCHAETES, UPTAKE
0524 " CHEMICAL ANALYSIS, CRUDE OIL, FUEL OIL, PETROLEUM PRODUCTS, DISPERSANTS, TOXICITY
0525 " BENTHOS, FISH, MOLLUSKS, CONTAMINATION, SAMPLING, HYDROCARBONS , EKOFISK BLOWOUT, NORTH SEA
0528 " ABSORPTION, PETROLEUM PRODUCTS, FISH, FOOD WEB, *TAINTING
0540 " BIODEGRADATION, MONITORING, CHROMATOGRAPHY, ONSHORE IMPACTS, ENVIRONMENTAL EFFECTS, SEDIMENTS, INTERTIDAL ZONE, RESTORATION, TROPICAL REGIONS, RECOVERY, PUERTO RICO
0541 " AMOCO CADIZ SPILL, OIL SPILLS, DISPERSANTS, RECOVERY, ENVIRONMENTAL EFFECTS, MARINE ORGANISMS, SPILL CLEANUP
0561 " ARGO MERCHANT SPILL, OIL SPILLS, ECOSYSTEMS, TANKERS, MARINE ORGANISMS, WILDLIFE, EKOFISK BLOWOUT, SHIPS, SOCIOECONOMIC EFFECTS, MICROORGANISMS, TOXICITY, LEGISLATION
0563 " BALTIC SEA, ANALYTICAL TECHNIQUES, SOURCE IDENTIFICATION, PHYTOPLANKTON, FISH, CONCENTRATIONS, SWEDEN, FINLAND, USSR, *TAGGING
0566 " TANKERS, ENVIRONMENTAL EFFECTS, FISH, FATE, *DRUPA SPILL
0568 " OIL SPILLS, ENVIRONMENTAL EFFECTS, RECOVERY, ONSHORE IMPACTS, INTERTIDAL ZONE, SPILL CLEANUP, METULA SPILL, STRAIT OF MAGELLAN, CHILE
0570 " BENTHOS, PIPELINES, OIL SPILLS, MARSHES, PLANTS, MONITORING, SPILL CLEANUP, TEXAS
0576 " BEAUFORT SEA, OIL SPILLS, SPILL RESPONSE, CONTINGENCY PLANNING, ENVIRONMENTAL EFFECTS, FATE, MOVEMENT, TOXICITY, PLANKTON, MARINE MAMMALS, FISH, BIRDS, *SCIENTIFIC RESPONSE
0607 " MODELS, FISHERIES, OIL SPILLS, DISPERSANTS, ENVIRONMENTAL EFFECTS, FISH, FATE, GEORGES BANK
0608 " BEHAVIOR, ATLANTIC OCEAN, MODELS, OIL SPILLS, FISHERIES, PREDICTIONS, FATE, FISH, SPREADING, DRIFT, MOVEMENT, GEORGES BANK, *COD
0622 " FUEL OIL, INCINERATION, WATER QUALITY, FATE, HARBORS, CALIFORNIA, SANSINENA SPILL
0623 " BEACHES, TAR, NATURAL SEEPAGE, FATE, DISTRIBUTION, SEDIMENTS, MARINE ORGANISMS, INTERTIDAL ZONE, CALIFORNIA, SANTA BARBARA CHANNEL
0624 " BIODEGRADATION, BEHAVIOR, OIL SPILLS, FATE, MODELS, MOLLUSKS, FISHERIES, *RESEARCH PROGRAM
0640 " BASELINE STUDIES, ARCTIC, PHYSICAL EFFECTS, ENVIRONMENTAL EFFECTS, OIL SPILLS, SOCIOECONOMIC EFFECTS, MICROORGANISMS, FISH, FISHERIES, NORTH SEA, OCS, OFFSHORE DEVELOPMENT
0643 " ALASKA , ECONOMIC EFFECTS, SOCIOECONOMIC EFFECTS, ENVIRONMENTAL MANAGEMENT, TANKERS, SAFETY, ECOSYSTEMS, LIABILITY, OCS, OIL INDUSTRY, POLLUTION CONTROL, FISHERIES, GULF OF ALASKA
R011 " BIOINDICATORS, MONITORING, CONTAMINATION

R012 BIOLOGICAL EFFECTS, BIOINDICATORS, BACTERIA, MICROORGANISMS, SUBLETHAL EFFECTS, MARINE ENVIRONMENT, *CHEMOTAXIS
R028 " BEHAVIOR, SPILL RESPONSE, INFORMATION SYSTEMS, SPILL TRAJECTORIES, PHYSICAL EFFECTS, FATE, CHEMICAL EFFECTS, CHEMICAL ANALYSIS, *SCIENTIFIC RESPONSE
R030 " CRUDE OIL, HYDROCARBONS , CONCENTRATIONS, CHRONIC EFFECTS, MARINE ORGANISMS, UPTAKE, RELEASE, GROWTH, SEDIMENTS, ECOSYSTEMS, PACIFIC COAST
R031 " BEHAVIOR, OIL SHALE, CORALS, CARCINOGENS, METABOLISM, GULF OF MEXICO, *DRILLING FLUIDS
R032 " FISH, CHRONIC EFFECTS, TOXICITY, CRUDE OIL, OCS, TEXAS, *HISTOPATHOLOGY, *SCIAENIDEA
R033 " ARCTIC, ALGAE, ALASKA , OIL SPILLS, ECOSYSTEMS, FRESHWATER, ZOOPLANKTON, BIOMASS, REPRODUCTION, UPTAKE, *TUNDRA PONDS
R034 " ANIMALS, MARINE MAMMALS, HABITATS, OIL SPILLS, ENVIRONMENTAL EFFECTS, MARINE ENVIRONMENT, *SEA OTTERS
R036 " BASELINE STUDIES, ALASKA , HYDROCARBONS , SUBLETHAL EFFECTS, MARINE ORGANISMS, FISH, UPTAKE, METABOLISM, TOXICITY, FOOD WEB, CHEMICAL ANALYSIS, DISPERSANTS, *PATHOLOGY
R037 " BEHAVIOR, FISH, MARINE ENVIRONMENT, ENVIRONMENTAL EFFECTS, REPRODUCTION, GROWTH, TOXICITY, MONITORING
R038 " ANALYTICAL TECHNIQUES, HYDROCARBONS , MARINE ORGANISMS, TOXICITY, ECOSYSTEMS, FATE, ENVIRONMENTAL EFFECTS, SUBARCTIC REGIONS, NOAA
R047 " ANALYTICAL TECHNIQUES, TOXICITY, DETECTION, HYDROCARBONS , SAMPLING, CONCENTRATIONS, CARCINOGENS
R048 " ENVIRONMENTAL EFFECTS, MARINE ENVIRONMENT, FOOD WEB, SOURCE IDENTIFICATION
R049 " BIODEGRADATION, ARCTIC, ALASKA , MICROORGANISMS, CRUDE OIL, ICE
R060 " ANALYTICAL TECHNIQUES, HYDROCARBONS , FATE, DISTRIBUTION, CHEMICAL ANALYSIS, BUZZARDS BAY, *NEW YORK BIGHT
R064 BIOLOGICAL TREATMENT, AROMATIC HYDROCARBONS, OIL SHALE, REFINING, WASTEWATERS, POLLUTION CONTROL
0513 BIOMASS, BIOLOGICAL EFFECTS, OIL SPILLS, ZOOPLANKTON, DISTRIBUTION, HYDROCARBONS , ESTUARIES
R033 " BIOLOGICAL EFFECTS, ARCTIC, ALGAE, ALASKA , OIL SPILLS, ECOSYSTEMS, FRESHWATER, ZOOPLANKTON, REPRODUCTION, UPTAKE, *TUNDRA PONDS
0484 BIRDS, BIOLOGICAL EFFECTS, ESTUARIES
0488 " BIOLOGICAL EFFECTS, ACUTE EFFECTS, CHRONIC EFFECTS, TOXICITY, HYDROCARBONS , GROWTH, REPRODUCTION
0500 " HYDROCARBONS , CHRONIC EFFECTS, CRUDE OIL, TOXICITY, UPTAKE
0507 " BASELINE STUDIES, ARGO MERCHANT SPILL, ENVIRONMENTAL EFFECTS, MARINE MAMMALS, CONTAMINATION, MASSACHUSETTS
0576 " BIOLOGICAL EFFECTS, BEAUFORT SEA, OIL SPILLS, SPILL RESPONSE, CONTINGENCY PLANNING, ENVIRONMENTAL EFFECTS, FATE, MOVEMENT, TOXICITY, PLANKTON, MARINE MAMMALS, FISH, *SCIENTIFIC RESPONSE
0475 BLACK SEA, REGULATIONS, LEGISLATION, FOREIGN GOVERNMENTS, GOVERNMENT AGENCIES, LAW ENFORCEMENT, CONTINGENCY PLANNING, SPILL CLEANUP, EQUIPMENT, USSR
0502 " BIOLOGICAL EFFECTS, PETROLEUM PRODUCTS, MARINE ORGANISMS
0543 BLM, BASELINE STUDIES, ALASKA , OCS, ENVIRONMENTAL MANAGEMENT, NOAA, GOVERNMENT AGENCIES, MODELS
0634 " BIBLIOGRAPHIES, OCS, OFFSHORE DEVELOPMENT, COASTAL ZONE MANAGEMENT, OIL SPILLS
0477 BLOWOUT PREVENTION, DRILLING , EQUIPMENT, DESIGN-ENGINEERING, PATENT
0385 BLOWOUTS, ARCTIC, SPILL CONTAINMENT, SPILL REMOVAL, EQUIPMENT, OCS, DESIGN-ENGINEERING, *UNDERWATER CONTAINMENT
0595 " BEHAVIOR, MODELS, FATE, OFFSHORE DEVELOPMENT
0383 BOOMS, SPILL CONTAINMENT, SPILL REMOVAL, DESIGN-ENGINEERING, EQUIPMENT, PATENT
0384 " SPILL CONTAINMENT, SHIPS, EQUIPMENT, DESIGN-ENGINEERING, PATENT
0386 " SPILL CONTAINMENT, OIL SLICKS, DESIGN-ENGINEERING, EQUIPMENT, EPA, *PERFORMANCE TESTING, *OHMSETT FACILITY
0387 " SPILL CONTAINMENT, RIVERS, DESIGN-ENGINEERIGN, *DEFLECTORS
0389 " BEHAVIOR, SPILL CONTAINMENT, OIL SLICKS, MODELS, EQUIPMENT, PHYSICAL EFFECTS
0390 " SPILL CONTAINMENT, EQUIPMENT, FLOTATION, DESIGN-ENGINEERING, PATENT
0391 " SPILL CONTAINMENT, DESIGN-ENGINEERING, PATENT, EQUIPMENT
0392 " SPILL CONTAINMENT, EQUIPMENT, DESIGN-ENGINEERING
0394 " SPILL CONTAINMENT, EQUIPMENT, DESIGN-ENGINEERING, PATENT
0396 " SPILL CONTAINMENT, ICE, DESIGN-ENGINEERING, RIVERS, USCG, *CANADIAN COAST GUARD
0398 " SPILL CONTAINMENT, DESIGN-ENGINEERING, EQUIPMENT, PATENT, *TOW PLATES
0413 " SPILL CLEANUP, SKIMMERS, DESIGN-ENGINEERING, EQUIPMENT, EPA, USCG, *PERFORMANCE TESTING, *OHMSETT FACILITY
0415 " SPILL CLEANUP, EQUIPMENT, DESIGN-ENGINEERING, SKIMMERS, SHIPS, *FIELD TESTS, *AIR CUSHION VEHICLES
0419 " SPILL CLEANUP, ICE, EQUIPMENT, FUEL OIL, SKIMMERS, INCINERATION, BOUCHARD 65 SPILL, BUZZARDS BAY
0456 " SPILL RESPONSE, SPILL CLEANUP, STRATEGIC PETROLEUM RESERVE, EQUIPMENT, SKIMMERS, STORAGE, CONTINGENCY PLANNING, LOUISIANA
0469 " SPILL RESPONSE, EQUIPMENT, RISK ANALYSIS, CONTINGENCY PLANNING, MODELS, SKIMMERS, *COMPUTER SIMULATIONS

0614 BOOMS, OIL SPILLS, SPILL CONTAINMENT, DISPERSANTS, DISPERSION, SPREADING, MONITORING, MOVEMENT, FATE
R022 " SPILL CONTAINMENT, SORBENTS, EPA, *PERFORMANCE TESTING, *OHMSETT FACILITY
R023 " SPILL CONTAINMENT, EQUIPMENT, EPA, *PERFORMANCE TESTING, *AIR JET BOOM, *OHMSETT FACILITY
R024 " SPILL CLEANUP, SKIMMERS, EQUIPMENT, DOE, EPA, *PERFORMANCE TESTING, *OHMSETT FACILITY
0419 BOUCHARD 65 SPILL, BOOMS, SPILL CLEANUP, ICE, EQUIPMENT, FUEL OIL, SKIMMERS, INCINERATION, BUZZARDS BAY
0585 " FUEL OIL, ICE, MOVEMENT, OIL SPILLS, MODELS, BUZZARDS BAY
0591 " CHEMICAL ANALYSIS, CHROMATOGRAPHY, HYDROCARBONS , FUEL OIL, WEATHERING, EVAPORATION, SAMPLING, ICE, SHIPS, BUZZARDS BAY
0406 BRAZIL, BEACHES, DISPERSANTS, ENVIRONMENTAL EFFECTS, SPILL CLEANUP, FATE, SEDIMENTS, CRUDE OIL, *BRAZILIAN MARINA SPILL
0419 BUZZARDS BAY, BOUCHARD 65 SPILL, BOOMS, SPILL CLEANUP, ICE, EQUIPMENT, FUEL OIL, SKIMMERS, INCINERATION
0573 " FUEL OIL, FATE, SEDIMENTS, ICE, FLORIDA SPILL
0585 " BOUCHARD 65 SPILL, FUEL OIL, ICE, MOVEMENT, OIL SPILLS, MODELS
0591 " BOUCHARD 65 SPILL, CHEMICAL ANALYSIS, CHROMATOGRAPHY, HYDROCARBONS , FUEL OIL, WEATHERING, EVAPORATION, SAMPLING, ICE, SHIPS
R060 " BIOLOGICAL EFFECTS, ANALYTICAL TECHNIQUES, HYDROCARBONS , FATE, DISTRIBUTION, CHEMICAL ANALYSIS, *NEW YORK BIGHT
0347 CALIFORNIA, BIOINDICATORS, BENTHOS, FISH, HYDROCARBONS , CHEMICAL ANALYSIS, CHROMATOGRAPHY, DISTRIBUTION, SEDIMENTS, NATURAL SEEPAGE, OCS, SANTA BARBARA CHANNEL
0353 " REMOTE SENSING, DETECTION, NATURAL SEEPAGE, OIL SLICKS, PLATFORMS, SURVEILLANCE, EQUIPMENT, USCG, SANTA BARBARA CHANNEL, *RADAR SYSTEMS
0410 " SPILL CLEANUP, SPILL RESPONSE, TANKERS, HARBORS, EQUIPMENT, SANSINENA SPILL
0422 " API, SPILL CLEANUP, SKIMMERS, DISPERSANTS, OIL SLICKS, *PETROLEUM CONTINGENCY ORGANIZATION, *FIELD TESTS
0424 " SPILL CLEANUP, SPILL RESPONSE, TANKERS, HARBORS, EQUIPMENT, USCG, SANSINENA SPILL
0512 " BENTHOS, BASELINE STUDIES, INVERTEBRATES, HYDROCARBONS , CONTAMINATION, SAMPLING, OCS
0596 " MODELS, OIL SPILLS, SHIPS, TANKERS, OIL TRANSPORT, PREDICTIONS, COASTAL WATERS, PACIFIC COAST
0619 " BENTHOS, FUEL OIL, FATE, SEDIMENTS, HARBORS, SEDIMENTATION, INCINERATION, DISTRIBUTION, CHEMICAL EFFECTS, SANSINENA SPILL
0622 " BIOLOGICAL EFFECTS, FUEL OIL, INCINERATION, WATER QUALITY, FATE, HARBORS, SANSINENA SPILL
0623 " BIOLOGICAL EFFECTS, BEACHES, TAR, NATURAL SEEPAGE, FATE, DISTRIBUTION, SEDIMENTS, MARINE ORGANISMS, INTERTIDAL ZONE, SANTA BARBARA CHANNEL
0658 " TANKERS, OIL TRANSFER, CONTINGENCY PLANNING, SPILL CLEANUP, EQUIPMENT, *LIGHTERING OPERATIONS, *VLCC
0680 " BIBLIOGRAPHIES, PACIFIC COAST, OCS, OFFSHORE DEVELOPMENT, *ENVIRONMENTAL INFORMATION, *LITERATURE REVIEW
0427 CANADA, PERSONNEL TRAINING, CONTINGENCY PLANNING, SPILL CLEANUP, SPILL RESPONSE
0437 " SPILL RESPONSE, INFORMATION SYSTEMS, *MANITOBA, *ENVIRONMENTAL ACCIDENT PROGRAM, *SPILL REPORTING
0438 " SPILL RESPONSE, DISPERSANTS, EQUIPMENT, SHIPS, DESIGN-ENGINEERING, *CANADIAN COAST GUARD
0441 " BEAUFORT SEA, SPILL RESPONSE, CONTINGENCY PLANNING, GOVERNMENT AGENCIES, *BREX III FIELD EXERCISE
0447 " BEAUFORT SEA, CONTINGENCY PLANNING, SPILL CLEANUP, SPILL RESPONSE, INDUSTRIES, POLLUTION CONTROL
0542 " BASELINE STUDIES, ARCTIC, EIS, DRILLING , EXPLORATION , ENVIRONMENTAL EFFECTS, OIL FIELDS, SUBARCTIC REGIONS
0509 CARCINOGENS, BIOLOGICAL EFFECTS, AROMATIC HYDROCARBONS, SOURCES, FOOD WEB, MARINE ORGANISMS, MARINE ENVIRONMENT, *AHH
R031 " BIOLOGICAL EFFECTS, BEHAVIOR, OIL SHALE, CORALS, METABOLISM, GULF OF MEXICO, *DRILLING FLUIDS
R035 " ALGAE, HYDROCARBONS , MICROORGANISMS, METABOLISM, *PROTOZOA, *MICROSOMES, *MUTAGENS
R047 " BIOLOGICAL EFFECTS, ANALYTICAL TECHNIQUES, TOXICITY, DETECTION, HYDROCARBONS , SAMPLING, CONCENTRATIONS
0430 CARIBBEAN SEA, SPILL COOPERATIVES, CONTINGENCY PLANNING, SPILL CLEANUP, EQUIPMENT, SPILL RESPONSE
0347 CHEMICAL ANALYSIS, CALIFORNIA, BIOINDICATORS, BENTHOS, FISH, HYDROCARBONS , CHROMATOGRAPHY, DISTRIBUTION, SEDIMENTS, NATURAL SEEPAGE, OCS, SANTA BARBARA CHANNEL
0348 " BALTIC SEA, MONITORING
0358 " SAMPLING, HYDROCARBONS , DISPERSANTS, DISPERSION
0359 " CHROMATOGRAPHY, *TRACE ANALYSIS
0360 " BIOGENIC HYDROCARBONS, BENTHOS, ARGO MERCHANT SPILL, HYDROCARBONS , PAH, GC/MS, WSF, SEA SURFACE, SEDIMENTS, MARINE ORGANISMS, ZOOPLANKTON, SOURCES, TANKERS, GEORGES BANK
0361 " SAMPLING, CONTAMINATION, FISH, *SALMON, *SAITHE, *OIL TAINTING

0362 CHEMICAL ANALYSIS, ANALYTICAL TECHNIQUES, SPECTROSCOPY, HYDROCARBONS , DISPERSANTS, OIL SPILLS
0363 " HYDROCARBONS , CONCENTRATIONS, DETECTION, PACIFIC OCEAN
0364 " BIBLIOGRAPHIES, ANALYTICAL TECHNIQUES, SAMPLING, MONITORING, SURVEILLANCE, EQUIPMENT, SPECTROMETRY
0365 " ANALYTICAL TECHNIQUES, DETECTION, PAH, CHROMATOGRAPHY, *UV PHOTOMETRY
0366 " SAMPLING, DISPERSANTS, OIL SPILLS, EVAPORATION, HYDROCARBONS , *OIL SPILL VAPORS
0367 " HYDROCARBONS , CONCENTRATIONS, DETECTION, SAMPLING, DISTRIBUTION, CHROMATOGRAPHY, NORTH SEA
0369 " BAYS, WATER QUALITY, CONTAMINANTS, SOURCES, JAPAN
0370 " AROMATIC HYDROCARBONS, AMOCO CADIZ SPILL, SAMPLING, PAH, GC/MS, OXIDATION, UPTAKE, MARINE ORGANISMS, SEDIMENTS, *MOUSSE
0371 " BALTIC SEA, CONCENTRATIONS, SPECTROSCOPY, *IR
0372 " SPECTROSCOPY, WASTEWATERS, INDUSTRIES
0375 " ANALYTICAL TECHNIQUES, WASTEWATERS, DETECTION, OIL-WATER SEPARATION, *IR
0376 " BIOLOGICAL EFFECTS, OIL SPILLS, SAMPLING, SEDIMENTS, GC/MS, WEATHERING, CONCENTRATIONS, ONSHORE IMPACTS, METULA SPILL, STRAIT OF MAGELLAN, CHILE
0377 " SOURCE IDENTIFICATION, USCG, OIL SPILLS, COMPENSATION, LIABILITY
0378 " ANALYTICAL TECHNIQUES, SOURCE IDENTIFICATION, NATURAL SEEPAGE, WEATHERING, SAMPLING, SPECTROSCOPY
0379 " ANALYTICAL TECHNIQUES, SOURCE IDENTIFICATION, SAMPLING, HYDROCARBONS , CHROMATOGRAPHY, SPECTROSCOPY, *IR, *UV, *FLUORESCENCE
0380 " ARGO MERCHANT SPILL, ANALYTICAL TECHNIQUES, SOURCE IDENTIFICATION, CHROMATOGRAPHY, HYDROCARBONS , FISH, FATE, MASSACHUSETTS
0381 " SOURCE IDENTIFICATION, MONITORING, PETROLEUM PRODUCTS, OIL SPILLS
0504 " BIOINDICATORS, BENTHOS, AROMATIC HYDROCARBONS, MARSHES, ECOSYSTEMS, HYDROCARBONS , INVERTEBRATES, OIL DISCHARGES, MONITORING, *BIOMAGNIFICATION
0524 " BIOLOGICAL EFFECTS, CRUDE OIL, FUEL OIL, PETROLEUM PRODUCTS, DISPERSANTS, TOXICITY
0581 " BIODEGRADATION, HYDROCARBONS , SOIL, MODELS, RESPIRATION, EMULSIONS, GROUNDWATER
0584 " OIL SPILLS, MOVEMENT, HYDROCARBONS , ESTUARIES, ECOSYSTEMS, MICROORGANISMS, GC/MS
0591 " BUZZARDS BAY, BOUCHARD 65 SPILL, CHROMATOGRAPHY, HYDROCARBONS , FUEL OIL, WEATHERING, EVAPORATION, SAMPLING, ICE, SHIPS
0593 " BEACHES, FATE, SEDIMENTS, HYDROCARBONS , *ARROW SPILL
0617 " SPREADING, DISTRIBUTION, HYDROCARBONS , FATE, GC/MS, EKOFISK BLOWOUT, NORTH SEA
0618 " BENTHOS, CONTAMINATION, SEDIMENTS, HYDROCARBONS , GC/MS, EKOFISK BLOWOUT, NORTH SEA
0669 " CRUDE OIL, PETROLEUM PRODUCTS, REFINERIES, WASTEWATERS,DISPOSAL , PUGET SOUND, WASHINGTON
R018 " AROMATIC HYDROCARBONS, CONTAMINANTS, DETECTION, SEDIMENTS, PUGET SOUND, WASHINGTON
R028 " BIOLOGICAL EFFECTS, BEHAVIOR, SPILL RESPONSE, INFORMATION SYSTEMS, SPILL TRAJECTORIES, PHYSICAL EFFECTS, FATE, CHEMICAL EFFECTS, *SCIENTIFIC RESPONSE
R036 " BIOLOGICAL EFFECTS, BASELINE STUDIES, ALASKA , HYDROCARBONS , SUBLETHAL EFFECTS, MARINE ORGANISMS, FISH, UPTAKE, METABOLISM, TOXICITY, FOOD WEB, DISPERSANTS, *PATHOLOGY
R051 " BIODEGRADATION, BACTERIA, ANALYTICAL TECHNIQUES, MICROORGANISMS
R060 " BUZZARDS BAY, BIOLOGICAL EFFECTS, ANALYTICAL TECHNIQUES, HYDROCARBONS , FATE, DISTRIBUTION, *NEW YORK BIGHT
R066 " ACTIVATED SLUDGE, WASTEWATER TREATMENT, REFINERIES, GC/MS, DOE, EPA, *ACTIVATED CARBON
0592 CHEMICAL EFFECTS, BIODEGRADATION, AQUATIC ENVIRONMENT, FATE, PHYSICAL EFFECTS
0619 " CALIFORNIA, BENTHOS, FUEL OIL, FATE, SEDIMENTS, HARBORS, SEDIMENTATION, INCINERATION, DISTRIBUTION, SANSINENA SPILL
R028 " CHEMICAL ANALYSIS, BIOLOGICAL EFFECTS, BEHAVIOR, SPILL RESPONSE, INFORMATION SYSTEMS, SPILL TRAJECTORIES, PHYSICAL EFFECTS, FATE, *SCIENTIFIC RESPONSE
0482 CHESAPEAKE BAY, BIOLOGICAL EFFECTS, BENTHOS, INVERTEBRATES, INTERTIDAL ZONE, SHIPS, FUEL OIL, *BARGE STC-101 SPILL
0376 CHILE, CHEMICAL ANALYSIS, BIOLOGICAL EFFECTS, OIL SPILLS, SAMPLING, SEDIMENTS, GC/MS, WEATHERING, CONCENTRATIONS, ONSHORE IMPACTS, METULA SPILL, STRAIT OF MAGELLAN
0521 " BIOLOGICAL EFFECTS, OIL SPILLS, RECOVERY, MORTALITY, INTERTIDAL ZONE, INVERTEBRATES, DETECTION, METULA SPILL, STRAIT OF MAGELLAN
0567 " BEACHES, OIL SPILLS, ENVIRONMENTAL EFFECTS, METULA SPILL, STRAIT OF MAGELLAN, TANKERS, MARSHES
0568 " BIOLOGICAL EFFECTS, OIL SPILLS, ENVIRONMENTAL EFFECTS, RECOVERY, ONSHORE IMPACTS, INTERTIDAL ZONE, SPILL CLEANUP, METULA SPILL, STRAIT OF MAGELLAN
0652 " OIL SPILLS, SPILL RESPONSE, ENVIRONMENTAL EFFECTS, MOVEMENT, SPREADING, METULA SPILL, STRAIT OF MAGELLAN
0653 " OIL SPILLS, SPILL RESPONSE, FOREIGN GOVERNMENTS, TANKERS, OIL TRANSFER, METULA SPILL, STRAIT OF MAGELLAN
0347 CHROMATOGRAPHY, CHEMICAL ANALYSIS, CALIFORNIA, BIOINDICATORS, BENTHOS, FISH, HYDROCARBONS , DISTRIBUTION, SEDIMENTS, NATURAL SEEPAGE, OCS, SANTA BARBARA CHANNEL
0359 " CHEMICAL ANALYSIS, *TRACE ANALYSIS
0365 " CHEMICAL ANALYSIS, ANALYTICAL TECHNIQUES, DETECTION, PAH, *UV PHOTOMETRY
0367 " CHEMICAL ANALYSIS, HYDROCARBONS , CONCENTRATIONS, DETECTION, SAMPLING, DISTRIBUTION, NORTH SEA
0379 " CHEMICAL ANALYSIS, ANALYTICAL TECHNIQUES, SOURCE IDENTIFICATION, SAMPLING, HYDROCARBONS , SPECTROSCOPY, *IR, *UV, *FLUORESCENCE

0380 CHROMATOGRAPHY, CHEMICAL ANALYSIS, ARGO MERCHANT SPILL, ANALYTICAL TECHNIQUES, SOURCE IDENTIFICATION, HYDROCARBONS , FISH, FATE, MASSACHUSETTS
0540 " BIOLOGICAL EFFECTS, BIODEGRADATION, MONITORING, ONSHORE IMPACTS, ENVIRONMENTAL EFFECTS, SEDIMENTS, INTERTIDAL ZONE, RESTORATION, TROPICAL REGIONS, RECOVERY, PUERTO RICO
0591 " CHEMICAL ANALYSIS, BUZZARDS BAY, BOUCHARD 65 SPILL, HYDROCARBONS , FUEL OIL, WEATHERING, EVAPORATION, SAMPLING, ICE, SHIPS
0616 " BIODEGRADATION, FATE, EVAPORATION, SEDIMENTATION, SOLUTION, WEATHERING, FUEL OIL, HYDROCARBONS , MARINE ENVIRONMENT, ANALYTICAL TECHNQIUES
R019 " ANALYTICAL TECHNIQUES, HYDROCARBONS , SEDIMENTS, GC/MS, MARINE ENVIRONMENT
R020 " ANALYTICAL TECHNIQUES, SOURCE IDENTIFICATION, CRUDE OIL, HYDROCARBONS , SPECTROMETRY, *IR
0481 CHRONIC EFFECTS, BIODEGRADATION, BENTHOS, CRUDE OIL, MARINE ORGANISMS, INVERTEBRATES, HYDROCARBONS , SEDIMENTS, UPTAKE
0483 " AROMATIC HYDROCARBONS, HYDROCARBONS , SEDIMENTS, MARINE ORGANISMS, MARINE ENVIRONMENT, NORWAY
0488 " BIRDS, BIOLOGICAL EFFECTS, ACUTE EFFECTS, TOXICITY, HYDROCARBONS , GROWTH, REPRODUCTION
0500 " BIRDS, HYDROCARBONS , CRUDE OIL, TOXICITY, UPTAKE
0503 " BIOLOGICAL EFFECTS, BIOASSAY, API, CRUDE OIL, CONTAMINATION, MARINE ORGANISMS, *RESEARCH OVERVIEW
0522 " BIOLOGICAL EFFECTS, BEHAVIOR, FISH, UPTAKE, WSF, CRUDE OIL, GROWTH, FISH, DEVELOPMENT , *PLATICHTHYS STELLATUS
0562 " ENVIRONMENTAL EFFECTS, ESTUARIES, ECOSYSTEMS, HEALTH HAZARDS, GULF OF MEXICO
0575 " ENVIRONMENTAL EFFECTS, SUBLETHAL EFFECTS, ESTUARIES, MARSHES, ECOSYSTEMS, PETROLEUM PRODUCTS, PHYSICAL EFFECTS
R030 " BIOLOGICAL EFFECTS, CRUDE OIL, HYDROCARBONS , CONCENTRATIONS, MARINE ORGANISMS, UPTAKE, RELEASE, GROWTH, SEDIMENTS, ECOSYSTEMS, PACIFIC COAST
R032 " BIOLOGICAL EFFECTS, FISH, TOXICITY, CRUDE OIL, OCS, TEXAS, *HISTOPATHOLOGY, *SCIAENIDEA
0349 COASTAL WATERS, REMOTE SENSING, SURVEILLANCE, POLLUTION CONTROL, TANKERS, SHIPS, EQUIPMENT, SWEDEN
0351 " ARCTIC, REMOTE SENSING, MONITORING, TANKERS, OFFSHORE DEVELOPMENT, SURVEILLANCE, OIL SLICKS, SOURCES, *SURSAT SATELLITE SYSTEM
0374 " BERMUDA, SEDIMENTS, HYDROCARBONS , CONCENTRATIONS, TROPICAL REGIONS, SAMPLING, MODELS
0505 " BIOLOGICAL EFFECTS, BENTHOS, INVERTEBRATES, DISTRIBUTION, DEVELOPMENT , ESTUARIES
0536 " OIL SPILLS, FATE, METULA SPILL, URQUIOLA SPILL, ENVIRONMENTAL EFFECTS, *VULNERABILITY INDEX
0539 " ECOSYSTEMS, ENVIRONMENTAL EFFECTS, CORAL REEFS, VEGETATION, PUERTO RICO, *RHIZOPHORA MANGLE, *VULNERABILITY
0564 " PETROLEUM PRODUCTS, ESTUARIES, ENVIRONMENTAL EFFECTS
0574 " ESTUARIES, POLLUTION CONTROL, ENVIRONMENTAL EFFECTS, COASTAL ZONE MANAGEMENT, US, *PROCEEDINGS
0596 " CALIFORNIA, MODELS, OIL SPILLS, SHIPS, TANKERS, OIL TRANSPORT, PREDICTIONS, PACIFIC COAST
0615 " SOURCES, FATE, SOURCE IDENTIFICATION, OCS, MONITORING, *POLLUTANT TRANSFER
0639 " OFFSHORE EXPLORATION, OFFSHORE PRODUCTION, DRILLING , ESTUARIES, ENVIRONMENTAL EFFECTS, GULF OF MEXICO
0641 " ALASKA , ESTUARIES, POLLUTION CONTOL, DEVELOPMENT , PRODUCTION , OIL TRANSPORT, PIPELINES, TANKERS, INDUSTRIES
0642 " OFFSHORE DEVELOPMENT, OCS, OIL-GAS LEASING, ONSHORE IMPACTS, COASTAL ZONE MANAGEMENT, FISHERIES, COMPENSATION, SOCIOECONOMIC EFFECTS
0677 " BACTERIA, CONTAMINANTS, SEAWATER, *ADRIATIC SEA, *, *VALORIZATION
0569 COASTAL ZONE MANAGEMENT, ESTUARIES, ENVIRONMENTAL DETERIORATION, COST ANALYSIS, OIL SPILLS, CONTAMINANTS, ECONOMIC EFFECTS
0574 " COASTAL WATERS, ESTUARIES, POLLUTION CONTROL, ENVIRONMENTAL EFFECTS, US, *PROCEEDINGS
0626 " ECONOMICS, ENVIRONMENTAL EFFECTS, COST ANALYSIS, OIL SPILLS, RESOURCE MANAGEMENT
0633 " ESTUARIES, OIL TRANSFER, REFINERIES, PETROCHEMICALS, ENVIRONMENTAL EFFECTS, INDUSTRIES, GOVERNMENT AGENCIES
0634 " BLM, BIBLIOGRAPHIES, OCS, OFFSHORE DEVELOPMENT, OIL SPILLS
0635 " OCS, OFFSHORE DEVELOPMENT, OIL-GAS LEASING, ONSHORE IMPACTS, SOCIOECONOMIC EFFECTS, ENVIRONMENTAL EFFECTS, LOUISIANA
0636 " ONSHORE IMPACTS, OCS, OFFSHORE DEVELOPMENT, RESOURCE MANAGEMENT
0642 " COASTAL WATERS, OFFSHORE DEVELOPMENT, OCS, OIL-GAS LEASING, ONSHORE IMPACTS, FISHERIES, COMPENSATION, SOCIOECONOMIC EFFECTS
0678 " ALASKA , ECOSYSTEMS, ENVIRONMENTAL PROTECTION, OIL TRANSPORT, RESOURCE MANAGEMENT, *PUBLIC PARTICIPATION
0402 COASTS, BEACHES, AMOCO CADIZ SPILL, SPILL RESPONSE, SPILL CLEANUP, SPILL DISPOSAL, SHORELINES, HARBORS, ESTUARIES, FRANCE
0519 " BIOLOGICAL EFFECTS, BENTHOS, INVERTEBRATES, MOLLUSKS, MORTALITY, CRUDE OIL, URQUIOLA SPILL, SPAIN
0520 " BIOLOGICAL EFFECTS, METULA SPILL, INTERTIDAL ZONE, INVERTEBRATES, DISTRIBUTION, SPAIN

0587 COASTS, BEHAVIOR, BEACHES, AMOCO CADIZ SPILL, FATE, ESTUARIES, SHORELINES, SEDIMENTS, PHYSICAL EFFECTS, FRANCE, *COASTAL PROCESSES, *VULNERABILITY INDEX
0659 " STORAGE, OIL TANKS, POLLUTION PREVENTION, USN, EPA, REGULATIONS, CONTINGENCY PLANNING, INLAND
R039 " BEAUFORT SEA, BASELINE STUDIES, ARCTIC, ICE, OCS, SEDIMENTS, OIL SPILLS, FATE, PREDICTIONS
0377 COMPENSATION, CHEMICAL ANALYSIS, SOURCE IDENTIFICATION, USCG, OIL SPILLS, LIABILITY
0458 " ALASKA , REGULATIONS, LEGISLATION, COST ANALYSIS, OIL SPILLS, ECONOMIC EFFECTS, US
0459 " OIL SPILLS, LEGISLATION, COST ANALYSIS, LIABILITY, ECONOMIC EFFECTS
0460 " OIL SPILLS, COST ANALYSIS, LIABILITY, ECONOMIC EFFECTS, *LITIGATION
0463 " LEGISLATION, OIL SPILLS, ENVIRONMENTAL MANAGEMENT, POLLUTION CONTROL, UK
0532 " ECONOMIC EFFECTS, SPILL CLEANUP, SHIPS, ENVIRONMENTAL EFFECTS, EPA, ST. LAWRENCE RIVER, *NEPCO 140 SPILL
0551 " LIABILITY, LEGISLATION, OIL SPILLS, US GOVERNMENT, SPILL CLEANUP
0552 " LEGISLATION, LIABILITY, OIL SPILLS, *SUPERFUND
0553 " OIL SPILLS, LIABILITY, COST ANALYSIS, ECONOMIC EFFECTS
0554 " ECONOMIC EFFECTS, OIL SPILLS, LIABILITY, POLLUTION CONTROL, INDUSTRIES
0555 " OIL SPILLS, LEGISLATION, ENVIRONMENTAL MANAGEMENT, *DAMAGE ASSESSMENT
0556 " ALASKA , LIABILITY, LEGISLATION, FISHERIES, US GOVERNMENT
0627 " LIABILITY, OCS, LEGISLATION, SPILL CLEANUP, ECONOMIC EFFECTS
0631 " LIABILITY, SPILL COOPERATIVES, LEGISLATION, SPILL CLEANUP, ECONOMIC EFFECTS, *SUPERFUND
0642 " COASTAL ZONE MANAGEMENT, COASTAL WATERS, OFFSHORE DEVELOPMENT, OCS, OIL-GAS LEASING, ONSHORE IMPACTS, FISHERIES, SOCIOECONOMIC EFFECTS
0660 " LIABILITY, SPILL COOPERATIVES, LEGISLATION, SPILL CLEANUP, ECONOMIC EFFECTS
0663 " SAFETY, LEGISLATION, US, TANKERS, POLLUTION PREVENTION, REGULATIONS
0345 CONCENTRATIONS, BIOINDICATORS, DETECTION, MICROORGANISMS, SOURCE IDENTIFICATION, UPTAKE, TOXICITY, CONTAMINATION, *PROTOZOA
0363 " CHEMICAL ANALYSIS, HYDROCARBONS , DETECTION, PACIFIC OCEAN
0367 " CHROMATOGRAPHY, CHEMICAL ANALYSIS, HYDROCARBONS , DETECTION, SAMPLING, DISTRIBUTION, NORTH SEA
0368 " HYDROCARBONS , DISTRIBUTION, SAMPLING, SEDIMENTS, HARBORS, OCS, NEW YORK
0371 " CHEMICAL ANALYSIS, BALTIC SEA, SPECTROSCOPY, *IR
0373 " ANALYTICAL TECHNIQUES, DETECTION, TOXICITY, *SPECTROPHOTOMETRY, *GRAVIMETRIC ANALYSIS
0374 " COASTAL WATERS, BERMUDA, SEDIMENTS, HYDROCARBONS , TROPICAL REGIONS, SAMPLING, MODELS
0376 " CHILE, CHEMICAL ANALYSIS, BIOLOGICAL EFFECTS, OIL SPILLS, SAMPLING, SEDIMENTS, GC/MS, WEATHERING, ONSHORE IMPACTS, METULA SPILL, STRAIT OF MAGELLAN
0489 " BIOLOGICAL EFFECTS, CRUDE OIL, WSF, METABOLISM, MORTALITY, REPRODUCTION, GROWTH, CRUSTACEANS, *CRANGON CRANGON
0563 " BIOLOGICAL EFFECTS, BALTIC SEA, ANALYTICAL TECHNIQUES, SOURCE IDENTIFICATION, PHYTOPLANKTON, FISH, SWEDEN, FINLAND, USSR, *TAGGING
0586 " BEHAVIOR, BAYS, AMOCO CADIZ SPILL, SEDIMENTS, DISTRIBUTION, FATE, FRANCE
R030 " CHRONIC EFFECTS, BIOLOGICAL EFFECTS, CRUDE OIL, HYDROCARBONS , MARINE ORGANISMS, UPTAKE, RELEASE, GROWTH, SEDIMENTS, ECOSYSTEMS, PACIFIC COAST
R042 " BENTHOS, BEAUFORT SEA, BASELINE STUDIES, ALASKA , HYDROCARBONS , DISTRIBUTION, OFFSHORE DEVELOPMENT, OFFSHORE PRODUCTION, ENVIRONMENTAL EFFECTS
R047 " CARCINOGENS, BIOLOGICAL EFFECTS, ANALYTICAL TECHNIQUES, TOXICITY, DETECTION, HYDROCARBONS , SAMPLING
0673 CONSERVATION, CRANKCASE OIL, WASTE OIL, RECLAMATION, RECYCLING, REUSE
0369 CONTAMINANTS, CHEMICAL ANALYSIS, BAYS, WATER QUALITY, SOURCES, JAPAN
0569 " COASTAL ZONE MANAGEMENT, ESTUARIES, ENVIRONMENTAL DETERIORATION, COST ANALYSIS, OIL SPILLS, ECONOMIC EFFECTS
0677 " COASTAL WATERS, BACTERIA, SEAWATER, *ADRIATIC SEA, *, *VALORIZATION
R014 " ANALYTICAL TECHNIQUES, HYDROCARBONS , DETECTION, SOURCE IDENTIFICATION
R018 " CHEMICAL ANALYSIS, AROMATIC HYDROCARBONS, DETECTION, SEDIMENTS, PUGET SOUND, WASHINGTON
R045 " OIL FIELDS, ENVIRONMENTAL EFFECTS, ECOSYSTEMS, GULF OF MEXICO
R054 " ALASKA , ADSORPTION, SOURCES, FATE, SEDIMENTS, MOVEMENT, PRODUCTION , *COOK INLET
R065 " REFINING, WASTEWATER TREATMENT, POLLUTION CONTROL, ILLINOIS, *INDIANA
0345 CONTAMINATION, CONCENTRATIONS, BIOINDICATORS, DETECTION, MICROORGANISMS, SOURCE IDENTIFICATION, UPTAKE, TOXICITY, *PROTOZOA
0346 " BIOINDICATORS, DETECTION, MICROORGANISMS, TOXICITY, UPTAKE, *PROTOZOA, *EUPLOTES DIADALEOS
0361 " CHEMICAL ANALYSIS, SAMPLING, FISH, *SALMON, *SAITHE, *OIL TAINTING
0490 " ABSORPTION, MARINE MAMMALS, HYDROCARBONS , CRUDE OIL, METABOLISM, UPTAKE, RELEASE, *PHOCA HISPIDA
0497 " BIOLOGICAL EFFECTS, FISH, HYDROCARBONS , FUEL OIL, REPRODUCTION, SUBLETHAL EFFECTS, GROWTH, DEVELOPMENT , *PSEUDOPLEURONECTES AMERICANUS
0503 " CHRONIC EFFECTS, BIOLOGICAL EFFECTS, BIOASSAY, API, CRUDE OIL, MARINE ORGANISMS, *RESEARCH OVERVIEW
0507 " BIRDS, BASELINE STUDIES, ARGO MERCHANT SPILL, ENVIRONMENTAL EFFECTS, MARINE MAMMALS, MASSACHUSETTS
0512 " CALIFORNIA, BENTHOS, BASELINE STUDIES, INVERTEBRATES, HYDROCARBONS , SAMPLING, OCS

0525 CONTAMINATION, BIOLOGICAL EFFECTS, BENTHOS, FISH, MOLLUSKS, SAMPLING, HYDROCARBONS , EKOFISK BLOWOUT, NORTH SEA
0526 " ANIMALS, OIL SPILLS, DISPERSION, MOVEMENT, *SEA TURTLES
0572 " BALTIC SEA, CRUDE OIL, PETROLEUM PRODUCTS
0618 " CHEMICAL ANALYSIS, BENTHOS, SEDIMENTS, HYDROCARBONS , GC/MS, EKOFISK BLOWOUT, NORTH SEA
R011 " BIOLOGICAL EFFECTS, BIOINDICATORS, MONITORING
R058 " MODELS, PREDICTIONS, GROUNDWATER, OIL SHALE
0427 CONTINGENCY PLANNING, CANADA, PERSONNEL TRAINING, SPILL CLEANUP, SPILL RESPONSE
0428 " PERSONNEL TRAINING, SPILL PREVENTION, SPILL CLEANUP, SPILL RESPONSE
0429 " PERSONNEL TRAINING, SPILL CLEANUP, SPILL RESPONSE
0430 " CARIBBEAN SEA, SPILL COOPERATIVES, SPILL CLEANUP, EQUIPMENT, SPILL RESPONSE
0432 " INTERNATIONAL AGREEMENTS, FOREIGN GOVERNMENTS, POLLUTION CONTROL, LAW ENFORCEMENT, IMCO, MEDITERRANEAN SEA, *ROCC, *UNEP
0433 " ALASKA , SPILL RESPONSE, PIPELINES, INLAND, TRANS-ALASKA PIPELINE, ICE, SPILL CONTAINMENT, SPILL CLEANUP, RESTORATION
0434 " DISPERSANTS, SPILL CLEANUP, ENVIRONMENTAL PROTECTION, GUIDELINES
0435 " SPILL RESPONSE, USCG, GOVERNMENT AGENCIES, SPILL CLEANUP, POLLUTION CONTROL, *NATIONAL RESPONSE CENTER
0436 " SPILL RESPONSE, POLLUTION CONTROL, UK
0439 " AMOCO CADIZ SPILL, SPILL RESPONSE, OIL SPILLS, EQUIPMENT, SPILL CLEANUP, FRANCE
0441 " CANADA, BEAUFORT SEA, SPILL RESPONSE, GOVERNMENT AGENCIES, *BREX III FIELD EXERCISE
0442 " ATLANTIC OCEAN, SPILL COOPERATIVES, SPILL CLEANUP, SPILL RESPONSE, EQUIPMENT, PERSONNEL TRAINING, OCS
0443 " SPILL RESPONSE, PERSONNEL TRAINING, TANKERS, OIL SPILLS, SPILL CLEANUP
0444 " SPILL RESPONSE, SPILL CLEANUP, DISPERSANTS, EQUIPMENT, ENVIRONMENTAL EFFECTS, *LOGISTICS, *CHEMICAL AGENTS
0445 " SPILL CLEANUP, SPILL RESPONSE, ENVIRONMENTAL EFFECTS, GOVERNMENT AGENCIES, SPILL COOPERATIVES
0446 " ARCTIC, SPILL RESPONSE, MODELS, MOVEMENT, SPREADING, ICE
0447 " CANADA, BEAUFORT SEA, SPILL CLEANUP, SPILL RESPONSE, INDUSTRIES, POLLUTION CONTROL
0448 " AUSTRALIA, SPILL CLEANUP, DISPERSANTS, POLLUTION CONTROL, FOREIGN GOVERNMENTS, OIL INDUSTRY
0450 " SPILL RESPONSE, SPILL CLEANUP, TANKERS, GOVERNMENT AGENCIES, USCG, LIABILITY, MASSACHUSETTS, *GLOBAL HOPE SPILL
0452 " SPILL RESPONSE, SOURCES, PREDICTIONS, OFFSHORE DEVELOPMENT, MOVEMENT, NORTH SEA, EKOFISK BLOWOUT
0453 " ARGO MERCHANT SPILL, ENVIRONMENTAL EFFECTS, GUIDELINES, SPILL RESPONSE, *SCIENTIFIC RESPONSE
0454 " SPILL COOPERATIVES, PERSONNEL TRAINING, SPILL CLEANUP, EQUIPMENT, SPILL RESPONSE, GULF OF MEXICO
0455 " SPILL RESPONSE, SPILL CLEANUP, EQUIPMENT, DISPERSANTS, SPREADING, OCEANS, SHORELINES
0456 " BOOMS, SPILL RESPONSE, SPILL CLEANUP, STRATEGIC PETROLEUM RESERVE, EQUIPMENT, SKIMMERS, STORAGE, LOUISIANA
0467 " POLLUTION CONTROL, SPILL CLEANUP, FOREIGN GOVERNMENTS, GOVERNMENT AGENCIES, LEGISLATION, REGULATIONS, EQUIPMENT, JAPAN
0469 " BOOMS, SPILL RESPONSE, EQUIPMENT, RISK ANALYSIS, MODELS, SKIMMERS, *COMPUTER SIMULATIONS
0475 " BLACK SEA, REGULATIONS, LEGISLATION, FOREIGN GOVERNMENTS, GOVERNMENT AGENCIES, LAW ENFORCEMENT, SPILL CLEANUP, EQUIPMENT, USSR
0534 " OIL SPILLS, SPILL CLEANUP, ECOSYSTEMS, RECOVERY, ENVIRONMENTAL EFFECTS
0557 " METULA SPILL, LEGISLATION, PERSONNEL TRAINING, TEXAS
0576 " BIRDS, BIOLOGICAL EFFECTS, BEAUFORT SEA, OIL SPILLS, SPILL RESPONSE, ENVIRONMENTAL EFFECTS, FATE, MOVEMENT, TOXICITY, PLANKTON, MARINE MAMMALS, FISH, *SCIENTIFIC RESPONSE
0611 " MODELS, RIVERS, OIL SPILLS, PREDICTIONS, MISSISSIPPI RIVER, *RIVERSPILL MODEL
0630 " OIL INDUSTRY, POLLUTION PREVENTION, PRODUCTION , EPA, REGULATIONS, LAW ENFORCEMENT, *STRIPPER WELLS
0657 " ALASKA , PORTS , OIL TERMINALS, OIL TRANSPORT, INDUSTRIES, GOVERNMENT AGENCIES, SPILL RESPONSE, SPILL CLEANUP, USCG, *PORT VALDEZ
0658 " CALIFORNIA, TANKERS, OIL TRANSFER, SPILL CLEANUP, EQUIPMENT, *LIGHTERING OPERATIONS, *VLCC
0659 " COASTS, STORAGE, OIL TANKS, POLLUTION PREVENTION, USN, EPA, REGULATIONS, INLAND
R027 " PERSONNEL TRAINING, SPILL RESPONSE, SPILL CLEANUP, POLLUTION PREVENTION, POLLUTION CONTROL
R046 " ANALYTICAL TECHNIQUES, OIL SPILLS, ENVIRONMENTAL EFFECTS, INFORMATION SYSTEMS, SPILL RESPONSE
R031 CORALS, CARCINOGENS, BIOLOGICAL EFFECTS, BEHAVIOR, OIL SHALE, METABOLISM, GULF OF MEXICO, *DRILLING FLUIDS
0539 CORAL REEFS, COASTAL WATERS, ECOSYSTEMS, ENVIRONMENTAL EFFECTS, VEGETATION, PUERTO RICO, *RHIZOPHORA MANGLE, *VULNERABILITY
0405 COST ANALYSIS, SPILL CLEANUP, SPILL REMOVAL, OIL SLICKS, DISPERSANTS, *AIRCRAFT
0458 " COMPENSATION, ALASKA , REGULATIONS, LEGISLATION, OIL SPILLS, ECONOMIC EFFECTS, US
0459 " COMPENSATION, OIL SPILLS, LEGISLATION, LIABILITY, ECONOMIC EFFECTS

0460 COST ANALYSIS, COMPENSATION, OIL SPILLS, LIABILITY, ECONOMIC EFFECTS, *LITIGATION
0462 " SPILL CLEANUP, LIABILITY, LEGISLATION, US GOVERNMENT
0472 " TANKERS, SEGREGATED BALLAST, OIL SPILLS, POLLUTION PREVENTION, ECONOMICS
0529 " BASELINE STUDIES, SOCIOECONOMIC EFFECTS, OIL SPILLS, MODELS, PREDICTIONS
0530 " OIL SPILLS, ECONOMIC EFFECTS, SOCIAL EFFECTS, ENVIRONMENTAL EFFECTS
0548 " SOCIOECONOMIC EFFECTS, ENVIRONMENTAL EFFECTS, REFINERIES, PETROCHEMICALS, OIL TRANSPORT, STORAGE, DEEPWATER PORTS, NORTH CAROLINA
0553 " COMPENSATION, OIL SPILLS, LIABILITY, ECONOMIC EFFECTS
0569 " CONTAMINANTS, COASTAL ZONE MANAGEMENT, ESTUARIES, ENVIRONMENTAL DETERIORATION, OIL SPILLS, ECONOMIC EFFECTS
0626 " COASTAL ZONE MANAGEMENT, ECONOMICS, ENVIRONMENTAL EFFECTS, OIL SPILLS, RESOURCE MANAGEMENT
0628 " LEGISLATION, POLLUTION CONTROL, OIL DISCHARGES, INDUSTRIES, WASTEWATERS, ECONOMICS
0656 " BIBLIOGRAPHIES, PIPELINES, ENVIRONMENTAL EFFECTS, OFFSHORE DEVELOPMENT, OCS, OIL TRANSPORT, OIL TRANSFER
0673 CRANKCASE OIL, CONSERVATION, WASTE OIL, RECLAMATION, RECYCLING, REUSE
0406 CRUDE OIL, BRAZIL, BEACHES, DISPERSANTS, ENVIRONMENTAL EFFECTS, SPILL CLEANUP, FATE, SEDIMENTS, *BRAZILIAN MARINA SPILL
0481 " CHRONIC EFFECTS, BIODEGRADATION, BENTHOS, MARINE ORGANISMS, INVERTEBRATES, HYDROCARBONS , SEDIMENTS, UPTAKE
0485 " BENTHOS, ARCTIC, AMPHIPODS, ACUTE EFFECTS, INVERTEBRATES, TOXICITY, SUBLETHAL EFFECTS, MORTALITY, SEDIMENTS
0489 " CONCENTRATIONS, BIOLOGICAL EFFECTS, WSF, METABOLISM, MORTALITY, REPRODUCTION, GROWTH, CRUSTACEANS, *CRANGON CRANGON
0490 " CONTAMINATION, ABSORPTION, MARINE MAMMALS, HYDROCARBONS , METABOLISM, UPTAKE, RELEASE, *PHOCA HISPIDA
0495 " BIOLOGICAL EFFECTS, BARENTS SEA, WSF, FISH, REPRODUCTION, *HATCHING
0500 " CHRONIC EFFECTS, BIRDS, HYDROCARBONS , TOXICITY, UPTAKE
0503 " CONTAMINATION, CHRONIC EFFECTS, BIOLOGICAL EFFECTS, BIOASSAY, API, MARINE ORGANISMS, *RESEARCH OVERVIEW
0506 " BIOLOGICAL EFFECTS, SUBLETHAL EFFECTS, HYDROCARBONS , INVERTEBRATES, CRUSTACEANS, *HISTOLOGY, *PENAEUS AZTECUS
0508 " BIOLOGICAL EFFECTS, TOXICITY, DISPERSANTS, MORTALITY, SUBLETHAL EFFECTS, MOLLUSKS, *ARGOPECTEN IRRADIANS
0511 " BENTHOS, ALASKA , WSF, FUEL OIL, TOXICITY, MARINE ORGANISMS, FISH, INVERTEBRATES, INTERTIDAL ZONE, *PELAGIC ZONE
0515 " BIOLOGICAL EFFECTS, BACTERIA, FRESHWATER, OIL SPILLS, PLANKTON, ICE, ECOSYSTEMS
0517 " BIOLOGICAL EFFECTS, ALGAE, WSF, GROWTH, METABOLISM, *NAPHTHALENES, *CHLAMYDOMONAS ANGULOSA
0518 " BIOLOGICAL EFFECTS, BENTHOS, NATURAL SEEPAGE, SEDIMENTS, MARINE ORGANISMS, SANTA BARBARA CHANNEL
0519 " COASTS, BIOLOGICAL EFFECTS, BENTHOS, INVERTEBRATES, MOLLUSKS, MORTALITY, URQUIOLA SPILL, SPAIN
0522 " CHRONIC EFFECTS, BIOLOGICAL EFFECTS, BEHAVIOR, FISH, UPTAKE, WSF, GROWTH, FISH, DEVELOPMENT , *PLATICHTHYS STELLATUS
0524 " CHEMICAL ANALYSIS, BIOLOGICAL EFFECTS, FUEL OIL, PETROLEUM PRODUCTS, DISPERSANTS, TOXICITY
0572 " CONTAMINATION, BALTIC SEA, PETROLEUM PRODUCTS
0577 " BIODEGRADATION, DISPERSANTS, MICROORGANISMS, PREDICTIONS, HYDROS
0579 " BIODEGRADATION, BACTERIA, MICROORGANISMS, HYDROCARBONS , SPILL CLEANUP, *PLASMID TRANSFER, *GENETIC ENGINEERING, *PSEUDOMONAS
0590 " BEHAVIOR, BEACHES, DISPERSANTS, FUEL OIL, SHORELINES, SEDIMENTS
0669 " CHEMICAL ANALYSIS, PETROLEUM PRODUCTS, REFINERIES, WASTEWATERS,DISPOSAL , PUGET SOUND, WASHINGTON
R017 " ANALYTICAL TECHNIQUES, OIL SPILLS, REMOTE SENSING, DETECTION, SURVEILLANCE, MONITORING, WEATHERING, *AGING
R020 " CHROMATOGRAPHY, ANALYTICAL TECHNIQUES, SOURCE IDENTIFICATION, HYDROCARBONS , SPECTROMETRY, *IR
R030 " CONCENTRATIONS, CHRONIC EFFECTS, BIOLOGICAL EFFECTS, HYDROCARBONS , MARINE ORGANISMS, UPTAKE, RELEASE, GROWTH, SEDIMENTS, ECOSYSTEMS, PACIFIC COAST
R032 " CHRONIC EFFECTS, BIOLOGICAL EFFECTS, FISH, TOXICITY, OCS, TEXAS, *HISTOPATHOLOGY, *SCIAENIDEA
R049 " BIOLOGICAL EFFECTS, BIODEGRADATION, ARCTIC, ALASKA , MICROORGANISMS, ICE
R052 " BIODEGRADATION, BACTERIA, MICROORGANISMS, MARINE ENVIRONMENT, ESTUARIES, SEDIMENTS
0489 CRUSTACEANS, CRUDE OIL, CONCENTRATIONS, BIOLOGICAL EFFECTS, WSF, METABOLISM, MORTALITY, REPRODUCTION, GROWTH, *CRANGON CRANGON
0499 " HYDROCARBONS , PAH, SUBLETHAL EFFECTS, RESPIRATION, TOXICITY, *PHENANTHRENE, *RHITHROPANOPEUS HARRISII
0506 " CRUDE OIL, BIOLOGICAL EFFECTS, SUBLETHAL EFFECTS, HYDROCARBONS , INVERTEBRATES, *HISTOLOGY, *PENAEUS AZTECUS
0510 " ALASKA , TOXICITY, SUBLETHAL EFFECTS, MORTALITY, MARINE ORGANISMS, HYDROCARBONS
R053 DECOMPOSITION, BIODEGRADATION, HYDROCARBONS , MARINE ENVIRONMENT, RECOVERY
0548 DEEPWATER PORTS, COST ANALYSIS, SOCIOECONOMIC EFFECTS, ENVIRONMENTAL EFFECTS, REFINERIES, PETROCHEMICALS, OIL TRANSPORT, STORAGE, NORTH CAROLINA
R021 DELAWARE, SOURCE IDENTIFICATION, ESTUARIES, SEDIMENTS, OIL DISCHARGES, *PHENOLIC COMPOUNDS, *URBAN RUNOFF

0352 DELAWARE BAY, REMOTE SENSING, SPREADING, DRIFT, MOVEMENT, MODELS, OIL SLICKS, ESTUARIES, SURVEILLANCE, *ESTUARINE FRONTS
0550 " BENTHOS, BASELINE STUDIES, PHYTOPLANKTON, ZOOPLANKTON, OIL TRANSFER, SHIPS
0382 DESIGN-ENGINEERING, SPILL CONTAINMENT, SPILL REMOVAL, OIL TRANSFER, SHIPS, EQUIPMENT, PATENT, *HYDRO-CARPET
0383 " BOOMS, SPILL CONTAINMENT, SPILL REMOVAL, EQUIPMENT, PATENT
0384 " BOOMS, SPILL CONTAINMENT, SHIPS, EQUIPMENT, PATENT
0385 " BLOWOUTS, ARCTIC, SPILL CONTAINMENT, SPILL REMOVAL, EQUIPMENT, OCS, *UNDERWATER CONTAINMENT
0386 " BOOMS, SPILL CONTAINMENT, OIL SLICKS, EQUIPMENT, EPA, *PERFORMANCE TESTING, *OHMSETT FACILITY
0388 " SPILL CONTAINMENT, EQUIPMENT, DISPERSION
0390 " BOOMS, SPILL CONTAINMENT, EQUIPMENT, FLOTATION, PATENT
0391 " BOOMS, SPILL CONTAINMENT, PATENT, EQUIPMENT
0392 " BOOMS, SPILL CONTAINMENT, EQUIPMENT
0394 " BOOMS, SPILL CONTAINMENT, EQUIPMENT, PATENT
0396 " BOOMS, SPILL CONTAINMENT, ICE, RIVERS, USCG, *CANADIAN COAST GUARD
0397 " SPILL CONTAINMENT, RIVERS, ICE, SPILL REMOVAL
0398 " BOOMS, SPILL CONTAINMENT, EQUIPMENT, PATENT, *TOW PLATES
0400 " SPILL CLEANUP, SPILL CONTAINMENT, EQUIPMENT, PATENT
0407 " SPILL CLEANUP, SKIMMERS, EQUIPMENT, *CANADIAN COAST GUARD, *PERFORMANCE TESTING
0408 " SPILL REMOVAL, SPILL DISPOSAL, EQUIPMENT, USCG, *DEBRIS DISPOSAL SYSTEMS
0409 " SPILL CLEANUP, SKIMMERS, FLOTATION, EQUIPMENT, PATENT
0412 " SPILL REMOVAL, OIL-WATER SEPARATION, MONITORING, POLLUTION CONTROL, EQUIPMENT, PATENT
0413 " BOOMS, SPILL CLEANUP, SKIMMERS, EQUIPMENT, EPA, USCG, *PERFORMANCE TESTING, *OHMSETT FACILITY
0415 " BOOMS, SPILL CLEANUP, EQUIPMENT, SKIMMERS, SHIPS, *FIELD TESTS, *AIR CUSHION VEHICLES
0417 " SPILL CLEANUP, SKIMMERS, EQUIPMENT, PATENT
0418 " SPILL CLEANUP, SKIMMERS, EQUIPMENT, PATENT
0420 " SPILL CLEANUP, SKIMMERS, EQUIPMENT, EPA, *PERFORMANCE TESTING, *OHMSETT FACILITY
0438 " CANADA, SPILL RESPONSE, DISPERSANTS, EQUIPMENT, SHIPS, *CANADIAN COAST GUARD
0476 " BALLAST , OIL-WATER SEPARATION, EQUIPMENT, POLLUTION PREVENTION, TANKERS, FILTRATION
0477 " BLOWOUT PREVENTION, DRILLING , EQUIPMENT, PATENT
R016 " BEHAVIOR, BEAUFORT SEA, BASELINE STUDIES, ALASKA , ICE, SPILL RESPONSE, DEVELOPMENT
R068 " ANALYTICAL TECHNIQUES, OIL-WATER SEPARATION, EQUIPMENT, FRANCE, *PERFORMANCE TESTING
0345 DETECTION, CONTAMINATION, CONCENTRATIONS, BIOINDICATORS, MICROORGANISMS, SOURCE IDENTIFICATION, UPTAKE, TOXICITY, *PROTOZOA
0346 " CONTAMINATION, BIOINDICATORS, MICROORGANISMS, TOXICITY, UPTAKE, *PROTOZOA, *EUPLOTES DIADALEOS
0353 " CALIFORNIA, REMOTE SENSING, NATURAL SEEPAGE, OIL SLICKS, PLATFORMS, SURVEILLANCE, EQUIPMENT, USCG, SANTA BARBARA CHANNEL, *RADAR SYSTEMS
0354 " REMOTE SENSING, ENVIRONMENTAL DETERIORATION, SOURCES, OIL DISCHARGES, WATER QUALITY, *HONG KONG
0363 " CONCENTRATIONS, CHEMICAL ANALYSIS, HYDROCARBONS , PACIFIC OCEAN
0365 " CHROMATOGRAPHY, CHEMICAL ANALYSIS, ANALYTICAL TECHNIQUES, PAH, *UV PHOTOMETRY
0367 " CONCENTRATIONS, CHROMATOGRAPHY, CHEMICAL ANALYSIS, HYDROCARBONS , SAMPLING, DISTRIBUTION, NORTH SEA
0373 " CONCENTRATIONS, ANALYTICAL TECHNIQUES, TOXICITY, *SPECTROPHOTOMETRY, *GRAVIMETRIC ANALYSIS
0375 " CHEMICAL ANALYSIS, ANALYTICAL TECHNIQUES, WASTEWATERS, OIL-WATER SEPARATION, *IR
0470 " POLLUTION CONTROL, MONITORING, WASTEWATERS, REFINERIES, OIL DISCHARGES, *RADIOTRACER TECHNIQUES
0521 " CHILE, BIOLOGICAL EFFECTS, OIL SPILLS, RECOVERY, MORTALITY, INTERTIDAL ZONE, INVERTEBRATES, METULA SPILL, STRAIT OF MAGELLAN
0666 " OIL INDUSTRY, POLLUTION CONTROL, EQUIPMENT, DRILLING , OIL TRANSPORT, OIL TRANSFER, STORAGE, PIPELINES, TANKERS, SPILL CONTAINMENT, SPILL REMOVAL, SPILL DISPOSAL
0674 " ENVIRONMENTAL EFFECTS, SOURCES
R010 " BILGES, BACTERIA, HYDROCARBONS , WASTEWATERS, POLLUTION CONTROL, *ENZYME ELECTRODE
R013 " ANALYTICAL TECHNIQUES, MONITORING, EQUIPMENT, SURVEILLANCE
R014 " CONTAMINANTS, ANALYTICAL TECHNIQUES, HYDROCARBONS , SOURCE IDENTIFICATION
R015 " REMOTE SENSING, OIL SPILLS, MONITORING, *RADAR
R017 " CRUDE OIL, ANALYTICAL TECHNIQUES, OIL SPILLS, REMOTE SENSING, SURVEILLANCE, MONITORING, WEATHERING, *AGING
R018 " CONTAMINANTS, CHEMICAL ANALYSIS, AROMATIC HYDROCARBONS, SEDIMENTS, PUGET SOUND, WASHINGTON
R047 " CONCENTRATIONS, CARCINOGENS, BIOLOGICAL EFFECTS, ANALYTICAL TECHNIQUES, TOXICITY, HYDROCARBONS , SAMPLING

0344 DEVELOPMENT , BASELINE STUDIES, ALGAE, ALASKA , MONITORING, MARINE ORGANISMS, ECOSYSTEMS, ENVIRONMENTAL EFFECTS
0473 " POLLUTION CONTROL, PORTS , DISPOSAL , WASTEWATERS, ESTUARIES, REGULATIONS, US, INDUSTRIES, GOVERNMENT AGENCIES, ENVIRONMENTAL PROTECTION
0497 " CONTAMINATION, BIOLOGICAL EFFECTS, FISH, HYDROCARBONS , FUEL OIL, REPRODUCTION, SUBLETHAL EFFECTS, GROWTH, *PSEUDOPLEURONECTES AMERICANUS
0498 " AROMATIC HYDROCARBONS, WSF, FUEL OIL, TOXICITY, MORTALITY, SUBLETHAL EFFECTS, RESPIRATION, GROWTH, METABOLISM, *RHITHROPANOPEUS HARISSI, *LIMULUS POLYPHEMUS
0505 " COASTAL WATERS, BIOLOGICAL EFFECTS, BENTHOS, INVERTEBRATES, DISTRIBUTION, ESTUARIES
0522 " CRUDE OIL, CHRONIC EFFECTS, BIOLOGICAL EFFECTS, BEHAVIOR, FISH, UPTAKE, WSF, GROWTH, FISH, *PLATICHTHYS STELLATUS
0544 " BASELINE STUDIES, ALASKA , ENVIRONMENTAL EFFECTS, OIL-GAS LEASING, MARINE ENVIRONMENT
0546 " ONSHORE IMPACTS, SOCIOECONOMIC EFFECTS, ENVIRONMENTAL EFFECTS, OCS, EIS, MISSISSIPPI, GULF OF MEXICO
0547 " BASELINE STUDIES, ENVIRONMENTAL PROTECTION, ENVIRONMENTAL MANAGEMENT, OIL INDUSTRY, RISK ANALYSIS, PERSIAN GULF, KUWAIT, *UNEP
0629 " REGULATIONS, OCS, OFFSHORE DEVELOPMENT, MONITORING, ENVIRONMENTAL PROTECTION
0637 " ONSHORE IMPACTS, PIPELINES, OIL SPILLS, OCS, RESOURCE MANAGEMENT, ENVIRONMENTAL EFFECTS, GOVERNMENT AGENCIES, GEORGIA
0641 " COASTAL WATERS, ALASKA , ESTUARIES, POLLUTION CONTOL, PRODUCTION , OIL TRANSPORT, PIPELINES, TANKERS, INDUSTRIES
0651 " EXPLORATION , RESOURCE MANAGEMENT, WILDLIFE, ENVIRONMENTAL DETERIORATION, ENVIRONMENTAL PROTECTION
0679 " POLLUTION CONTROL, WASTEWATER TREATMENT, OIL SHALE, *RESARCH PROJECTS
R016 " DESIGN-ENGINEERING, BEHAVIOR, BEAUFORT SEA, BASELINE STUDIES, ALASKA , ICE, SPILL RESPONSE
0358 DISPERSANTS, CHEMICAL ANALYSIS, SAMPLING, HYDROCARBONS , DISPERSION
0362 " CHEMICAL ANALYSIS, ANALYTICAL TECHNIQUES, SPECTROSCOPY, HYDROCARBONS , OIL SPILLS
0366 " CHEMICAL ANALYSIS, SAMPLING, OIL SPILLS, EVAPORATION, HYDROCARBONS , *OIL SPILL VAPORS
0403 " BEACHES, BEACH CLEANUP, ANALYTICAL TECHNIQUES, TOXICITY, OIL SLICKS, ENVIRONMENTAL EFFECTS, SPILL CLEANUP, UK, *LICENSING
0404 " BIODEGRADATION, AMOCO CADIZ SPILL, SPILL CLEANUP, SPILL REMOVAL, EQUIPMENT, SORBENTS, EMULSIONS, *CHEMICAL AGENTS
0405 " COST ANALYSIS, SPILL CLEANUP, SPILL REMOVAL, OIL SLICKS, *AIRCRAFT
0406 " CRUDE OIL, BRAZIL, BEACHES, ENVIRONMENTAL EFFECTS, SPILL CLEANUP, FATE, SEDIMENTS, *BRAZILIAN MARINA SPILL
0414 " OIL SLICKS, WEATHERING, FATE, SPILL CLEANUP, TOXICITY
0422 " CALIFORNIA, API, SPILL CLEANUP, SKIMMERS, OIL SLICKS, *PETROLEUM CONTINGENCY ORGANIZATION, *FIELD TESTS
0425 " BEACHES, SPILL CLEANUP, EQUIPMENT, INTERTIDAL ZONE, ENVIRONMENTAL EFFECTS, ECONOMICS, SHORELINES
0434 " CONTINGENCY PLANNING, SPILL CLEANUP, ENVIRONMENTAL PROTECTION, GUIDELINES
0438 " DESIGN-ENGINEERING, CANADA, SPILL RESPONSE, EQUIPMENT, SHIPS, *CANADIAN COAST GUARD
0444 " CONTINGENCY PLANNING, SPILL RESPONSE, SPILL CLEANUP, EQUIPMENT, ENVIRONMENTAL EFFECTS, *LOGISTICS, *CHEMICAL AGENTS
0448 " CONTINGENCY PLANNING, AUSTRALIA, SPILL CLEANUP, POLLUTION CONTROL, FOREIGN GOVERNMENTS, OIL INDUSTRY
0455 " CONTINGENCY PLANNING, SPILL RESPONSE, SPILL CLEANUP, EQUIPMENT, SPREADING, OCEANS, SHORELINES
0508 " CRUDE OIL, BIOLOGICAL EFFECTS, TOXICITY, MORTALITY, SUBLETHAL EFFECTS, MOLLUSKS, *ARGOPECTEN IRRADIANS
0514 " BIOLOGICAL EFFECTS, BACTERIA, FRESHWATER, ZOOPLANKTON, FUNGI, MICROORGANISMS
0524 " CRUDE OIL, CHEMICAL ANALYSIS, BIOLOGICAL EFFECTS, FUEL OIL, PETROLEUM PRODUCTS, TOXICITY
0541 " BIOLOGICAL EFFECTS, AMOCO CADIZ SPILL, OIL SPILLS, RECOVERY, ENVIRONMENTAL EFFECTS, MARINE ORGANISMS, SPILL CLEANUP
0577 " CRUDE OIL, BIODEGRADATION, MICROORGANISMS, PREDICTIONS, HYDROS
0588 " BEHAVIOR, PHYSICAL EFFECTS, EMULSIONS
0590 " CRUDE OIL, BEHAVIOR, BEACHES, FUEL OIL, SHORELINES, SEDIMENTS
0597 " BEHAVIOR, MODELS, FATE, OIL SPILLS, SPILL RESPONSE, SPILL CLEANUP, RISK ANALYSIS, SOURCE IDENTIFICATION, ENVIRONMENTAL EFFECTS
0607 " BIOLOGICAL EFFECTS, MODELS, FISHERIES, OIL SPILLS, ENVIRONMENTAL EFFECTS, FISH, FATE, GEORGES BANK
0614 " BOOMS, OIL SPILLS, SPILL CONTAINMENT, DISPERSION, SPREADING, MONITORING, MOVEMENT, FATE
R025 " OIL SPILLS, SPILL CLEANUP
R036 " CHEMICAL ANALYSIS, BIOLOGICAL EFFECTS, BASELINE STUDIES, ALASKA , HYDROCARBONS , SUBLETHAL EFFECTS, MARINE ORGANISMS, FISH, UPTAKE, METABOLISM, TOXICITY, FOOD WEB, *PATHOLOGY
0358 DISPERSION, DISPERSANTS, CHEMICAL ANALYSIS, SAMPLING, HYDROCARBONS
0388 " DESIGN-ENGINEERING, SPILL CONTAINMENT, EQUIPMENT
0479 " BIODEGRADATION, SPILL CONTAINMENT, SPILL CLEANUP, POLLUTION PREVENTION, SHIPS, TANKERS, SOURCES, STATISTICS, OIL SLICKS, SPREADING, EQUIPMENT

0526 DISPERSION, CONTAMINATION, ANIMALS, OIL SPILLS, MOVEMENT, *SEA TURTLES
0527 " OIL SLICKS, SEA SURFACE, PHYSICAL EFFECTS, MODELS, ENVIRONMENTAL EFFECTS, *WIND WAVES
0589 " BEHAVIOR, OIL SLICKS, *RAINFALL, *ENTRAINMENT
0614 " DISPERSANTS, BOOMS, OIL SPILLS, SPILL CONTAINMENT, SPREADING, MONITORING, MOVEMENT, FATE
0473 DISPOSAL , DEVELOPMENT , POLLUTION CONTROL, PORTS , WASTEWATERS, ESTUARIES, REGULATIONS, US, INDUSTRIES, GOVERNMENT AGENCIES, ENVIRONMENTAL PROTECTION
0670 " REFINERIES, PETROCHEMICALS, POLLUTION CONTROL, ECONOMICS, EQUIPMENT, WASTEWATER TREATMENT, SOLID WASTES
0671 " BIODEGRADATION, WASTE OIL, LAND FARMING, SLUDGE
0347 DISTRIBUTION, CHROMATOGRAPHY, CHEMICAL ANALYSIS, CALIFORNIA, BIOINDICATORS, BENTHOS, FISH, HYDROCARBONS , SEDIMENTS, NATURAL SEEPAGE, OCS, SANTA BARBARA CHANNEL
0367 " DETECTION, CONCENTRATIONS, CHROMATOGRAPHY, CHEMICAL ANALYSIS, HYDROCARBONS , SAMPLING, NORTH SEA
0368 " CONCENTRATIONS, HYDROCARBONS , SAMPLING, SEDIMENTS, HARBORS, OCS, NEW YORK
0505 " DEVELOPMENT , COASTAL WATERS, BIOLOGICAL EFFECTS, BENTHOS, INVERTEBRATES, ESTUARIES
0513 " BIOMASS, BIOLOGICAL EFFECTS, OIL SPILLS, ZOOPLANKTON, HYDROCARBONS , ESTUARIES
0520 " COASTS, BIOLOGICAL EFFECTS, METULA SPILL, INTERTIDAL ZONE, INVERTEBRATES, SPAIN
0586 " CONCENTRATIONS, BEHAVIOR, BAYS, AMOCO CADIZ SPILL, SEDIMENTS, FATE, FRANCE
0617 " CHEMICAL ANALYSIS, SPREADING, HYDROCARBONS , FATE, GC/MS, EKOFISK BLOWOUT, NORTH SEA
0619 " CHEMICAL EFFECTS, CALIFORNIA, BENTHOS, FUEL OIL, FATE, SEDIMENTS, HARBORS, SEDIMENTATION, INCINERATION, SANSINENA SPILL
0623 " CALIFORNIA, BIOLOGICAL EFFECTS, BEACHES, TAR, NATURAL SEEPAGE, FATE, SEDIMENTS, MARINE ORGANISMS, INTERTIDAL ZONE, SANTA BARBARA CHANNEL
R042 " CONCENTRATIONS, BENTHOS, BEAUFORT SEA, BASELINE STUDIES, ALASKA , HYDROCARBONS , OFFSHORE DEVELOPMENT, OFFSHORE PRODUCTION, ENVIRONMENTAL EFFECTS
R060 " CHEMICAL ANALYSIS, BUZZARDS BAY, BIOLOGICAL EFFECTS, ANALYTICAL TECHNIQUES, HYDROCARBONS , FATE, *NEW YORK BIGHT
R024 DOE, BOOMS, SPILL CLEANUP, SKIMMERS, EQUIPMENT, EPA, *PERFORMANCE TESTING, *OHMSETT FACILITY
R066 " CHEMICAL ANALYSIS, ACTIVATED SLUDGE, WASTEWATER TREATMENT, REFINERIES, GC/MS, EPA, *ACTIVATED CARBON
0352 DRIFT, DELAWARE BAY, REMOTE SENSING, SPREADING, MOVEMENT, MODELS, OIL SLICKS, ESTUARIES, SURVEILLANCE, *ESTUARINE FRONTS
0583 " SPREADING, WEATHERING, STATISTICAL ANLYSIS, FATE, SEA SURFACE, EKOFISK BLOWOUT, NORTH SEA
0594 " MODELS, MOVEMENT, SPREADING, PREDICTIONS, SEA SURFACE, SPILL TRAJECTORIES, PHYSICAL EFFECTS
0599 " MOVEMENT, SPREADING, SPILL TRAJECTORIES, SEA SURFACE
0600 " ARGO MERCHANT SPILL, MODELS, OIL SPILLS, MOVEMENT, SPILL TRAJECTORIES, PREDICTIONS, SPREADING
0603 " MODELS, OIL SPILLS, MOVEMENT, SPILL TRAJECTORIES, MONITORING, PREDICTIONS
0608 " BIOLOGICAL EFFECTS, BEHAVIOR, ATLANTIC OCEAN, MODELS, OIL SPILLS, FISHERIES, PREDICTIONS, FATE, FISH, SPREADING, MOVEMENT, GEORGES BANK, *COD
0477 DRILLING , DESIGN-ENGINEERING, BLOWOUT PREVENTION, EQUIPMENT, PATENT
0542 " CANADA, BASELINE STUDIES, ARCTIC, EIS, EXPLORATION , ENVIRONMENTAL EFFECTS, OIL FIELDS, SUBARCTIC REGIONS
0639 " COASTAL WATERS, OFFSHORE EXPLORATION, OFFSHORE PRODUCTION, ESTUARIES, ENVIRONMENTAL EFFECTS, GULF OF MEXICO
0666 " DETECTION, OIL INDUSTRY, POLLUTION CONTROL, EQUIPMENT, OIL TRANSPORT, OIL TRANSFER, STORAGE, PIPELINES, TANKERS, SPILL CONTAINMENT, SPILL REMOVAL, SPILL DISPOSAL
R061 " BIOASSAY, HYDROCARBONS , PETROCHEMICALS, TOXICITY, ECOSYSTEMS, OFFSHORE PRODUCTION, *DRILLING MUDS
0458 ECONOMIC EFFECTS, COST ANALYSIS, COMPENSATION, ALASKA , REGULATIONS, LEGISLATION, OIL SPILLS, US
0459 " COST ANALYSIS, COMPENSATION, OIL SPILLS, LEGISLATION, LIABILITY
0460 " COST ANALYSIS, COMPENSATION, OIL SPILLS, LIABILITY, *LITIGATION
0461 " LEGISLATION, US, LIABILITY, INTERNATIONAL AGREEMENTS, TRANS-ALASKA PIPELINE, TANKERS, REGULATIONS
0530 " COST ANALYSIS, OIL SPILLS, SOCIAL EFFECTS, ENVIRONMENTAL EFFECTS
0532 " COMPENSATION, SPILL CLEANUP, SHIPS, ENVIRONMENTAL EFFECTS, EPA, ST. LAWRENCE RIVER, *NEPCO 140 SPILL
0533 " FISHERIES, ENVIRONMENTAL EFFECTS, POLLUTION CONTROL, LEGISLATION, REGULATIONS, JAPAN
0553 " COST ANALYSIS, COMPENSATION, OIL SPILLS, LIABILITY
0554 " COMPENSATION, OIL SPILLS, LIABILITY, POLLUTION CONTROL, INDUSTRIES
0569 " COST ANALYSIS, CONTAMINANTS, COASTAL ZONE MANAGEMENT, ESTUARIES, ENVIRONMENTAL DETERIORATION, OIL SPILLS
0627 " COMPENSATION, LIABILITY, OCS, LEGISLATION, SPILL CLEANUP
0631 " COMPENSATION, LIABILITY, SPILL COOPERATIVES, LEGISLATION, SPILL CLEANUP, *SUPERFUND
0643 " BIOLOGICAL EFFECTS, ALASKA , SOCIOECONOMIC EFFECTS, ENVIRONMENTAL MANAGEMENT, TANKERS, SAFETY, ECOSYSTEMS, LIABILITY, OCS, OIL INDUSTRY, POLLUTION CONTROL, FISHERIES, GULF OF ALASKA

0660 ECONOMIC EFFECTS, COMPENSATION, LIABILITY, SPILL COOPERATIVES, LEGISLATION, SPILL CLEANUP
0425 ECONOMICS, DISPERSANTS, BEACHES, SPILL CLEANUP, EQUIPMENT, INTERTIDAL ZONE, ENVIRONMENTAL EFFECTS, SHORELINES
0472 " COST ANALYSIS, TANKERS, SEGREGATED BALLAST, OIL SPILLS, POLLUTION PREVENTION
0474 " INDUSTRIES, POLLUTION CONTROL, LEGISLATION, REGULATIONS, WASTWATER TREATMENT, *MANAGEMENT , *HANDBOOK
0609 " OCS, OFFSHORE DEVELOPMENT, MODELS, ENVIRONMENTAL EFFECTS, OIL SPILLS, ESTUARIES, GROUNDWATER, WATER QUALITY
0625 " BIBLIOGRAPHIES, SOCIOECONOMIC EFFECTS, OCS, OFFSHORE DEVELOPMENT, OIL-GAS LEASING, NORTH SEA, ONSHORE IMPACTS
0626 " COST ANALYSIS, COASTAL ZONE MANAGEMENT, ENVIRONMENTAL EFFECTS, OIL SPILLS, RESOURCE MANAGEMENT
0628 " COST ANALYSIS, LEGISLATION, POLLUTION CONTROL, OIL DISCHARGES, INDUSTRIES, WASTEWATERS
0670 " DISPOSAL , REFINERIES, PETROCHEMICALS, POLLUTION CONTROL, EQUIPMENT, WASTEWATER TREATMENT, SOLID WASTES
0344 ECOSYSTEMS, DEVELOPMENT , BASELINE STUDIES, ALGAE, ALASKA , MONITORING, MARINE ORGANISMS, ENVIRONMENTAL EFFECTS
0504 " CHEMICAL ANALYSIS, BIOINDICATORS, BENTHOS, AROMATIC HYDROCARBONS, MARSHES, HYDROCARBONS , INVERTEBRATES, OIL DISCHARGES, MONITORING, *BIOMAGNIFICATION
0515 " CRUDE OIL, BIOLOGICAL EFFECTS, BACTERIA, FRESHWATER, OIL SPILLS, PLANKTON, ICE
0534 " CONTINGENCY PLANNING, OIL SPILLS, SPILL CLEANUP, RECOVERY, ENVIRONMENTAL EFFECTS
0539 " CORAL REEFS, COASTAL WATERS, ENVIRONMENTAL EFFECTS, VEGETATION, PUERTO RICO, *RHIZOPHORA MANGLE, *VULNERABILITY
0561 " BIOLOGICAL EFFECTS, ARGO MERCHANT SPILL, OIL SPILLS, TANKERS, MARINE ORGANISMS, WILDLIFE, EKOFISK BLOWOUT, SHIPS, SOCIOECONOMIC EFFECTS, MICROORGANISMS, TOXICITY, LEGISLATION
0562 " CHRONIC EFFECTS, ENVIRONMENTAL EFFECTS, ESTUARIES, HEALTH HAZARDS, GULF OF MEXICO
0575 " CHRONIC EFFECTS, ENVIRONMENTAL EFFECTS, SUBLETHAL EFFECTS, ESTUARIES, MARSHES, PETROLEUM PRODUCTS, PHYSICAL EFFECTS
0584 " CHEMICAL ANALYSIS, OIL SPILLS, MOVEMENT, HYDROCARBONS , ESTUARIES, MICROORGANISMS, GC/MS
0643 " ECONOMIC EFFECTS, BIOLOGICAL EFFECTS, ALASKA , SOCIOECONOMIC EFFECTS, ENVIRONMENTAL MANAGEMENT, TANKERS, SAFETY, LIABILITY, OCS, OIL INDUSTRY, POLLUTION CONTROL, FISHERIES, GULF OF ALASKA
0678 " COASTAL ZONE MANAGEMENT, ALASKA , ENVIRONMENTAL PROTECTION, OIL TRANSPORT, RESOURCE MANAGEMENT, *PUBLIC PARTICIPATION
R030 " CRUDE OIL, CONCENTRATIONS, CHRONIC EFFECTS, BIOLOGICAL EFFECTS, HYDROCARBONS , MARINE ORGANISMS, UPTAKE, RELEASE, GROWTH, SEDIMENTS, PACIFIC COAST
R033 " BIOMASS, BIOLOGICAL EFFECTS, ARCTIC, ALGAE, ALASKA , OIL SPILLS, FRESHWATER, ZOOPLANKTON, REPRODUCTION, UPTAKE, *TUNDRA PONDS
R038 " BIOLOGICAL EFFECTS, ANALYTICAL TECHNIQUES, HYDROCARBONS , MARINE ORGANISMS, TOXICITY, FATE, ENVIRONMENTAL EFFECTS, SUBARCTIC REGIONS, NOAA
R045 " CONTAMINANTS, OIL FIELDS, ENVIRONMENTAL EFFECTS, GULF OF MEXICO
R061 " DRILLING , BIOASSAY, HYDROCARBONS , PETROCHEMICALS, TOXICITY, OFFSHORE PRODUCTION, *DRILLING MUDS
0542 EIS, DRILLING , CANADA, BASELINE STUDIES, ARCTIC, EXPLORATION , ENVIRONMENTAL EFFECTS, OIL FIELDS, SUBARCTIC REGIONS
0546 " DEVELOPMENT , ONSHORE IMPACTS, SOCIOECONOMIC EFFECTS, ENVIRONMENTAL EFFECTS, OCS, MISSISSIPPI, GULF OF MEXICO
R043 " ENVIRONMENTAL EFFECTS, OIL INDUSTRY
0452 EKOFISK BLOWOUT, CONTINGENCY PLANNING, SPILL RESPONSE, SOURCES, PREDICTIONS, OFFSHORE DEVELOPMENT, MOVEMENT, NORTH SEA
0525 " CONTAMINATION, BIOLOGICAL EFFECTS, BENTHOS, FISH, MOLLUSKS, SAMPLING, HYDROCARBONS , NORTH SEA
0561 " ECOSYSTEMS, BIOLOGICAL EFFECTS, ARGO MERCHANT SPILL, OIL SPILLS, TANKERS, MARINE ORGANISMS, WILDLIFE, SHIPS, SOCIOECONOMIC EFFECTS, MICROORGANISMS, TOXICITY, LEGISLATION
0583 " DRIFT, SPREADING, WEATHERING, STATISTICAL ANLYSIS, FATE, SEA SURFACE, NORTH SEA
0617 " DISTRIBUTION, CHEMICAL ANALYSIS, SPREADING, HYDROCARBONS , FATE, GC/MS, NORTH SEA
0618 " CONTAMINATION, CHEMICAL ANALYSIS, BENTHOS, SEDIMENTS, HYDROCARBONS , GC/MS, NORTH SEA
0404 EMULSIONS, DISPERSANTS, BIODEGRADATION, AMOCO CADIZ SPILL, SPILL CLEANUP, SPILL REMOVAL, EQUIPMENT, SORBENTS, *CHEMICAL AGENTS
0581 " CHEMICAL ANALYSIS, BIODEGRADATION, HYDROCARBONS , SOIL, MODELS, RESPIRATION, GROUNDWATER
0588 " DISPERSANTS, BEHAVIOR, PHYSICAL EFFECTS
0354 ENVIRONMENTAL DETERIORATION, DETECTION, REMOTE SENSING, SOURCES, OIL DISCHARGES, WATER QUALITY, *HONG KONG
0569 " ECONOMIC EFFECTS, COST ANALYSIS, CONTAMINANTS, COASTAL ZONE MANAGEMENT, ESTUARIES, OIL SPILLS
0651 " DEVELOPMENT , EXPLORATION , RESOURCE MANAGEMENT, WILDLIFE, ENVIRONMENTAL PROTECTION

0344 ENVIRONMENTAL EFFECTS, ECOSYSTEMS, DEVELOPMENT , BASELINE STUDIES, ALGAE, ALASKA , MONITORING, MARINE ORGANISMS
0403 " DISPERSANTS, BEACHES, BEACH CLEANUP, ANALYTICAL TECHNIQUES, TOXICITY, OIL SLICKS, SPILL CLEANUP, UK, *LICENSING
0406 " DISPERSANTS, CRUDE OIL, BRAZIL, BEACHES, SPILL CLEANUP, FATE, SEDIMENTS, *BRAZILIAN MARINA SPILL
0425 " ECONOMICS, DISPERSANTS, BEACHES, SPILL CLEANUP, EQUIPMENT, INTERTIDAL ZONE, SHORELINES
0426 " BEACHES, SPILL CLEANUP, SPILL RESPONSE, RESTORATION, MARINE MAMMALS, MARSHES
0444 " DISPERSANTS, CONTINGENCY PLANNING, SPILL RESPONSE, SPILL CLEANUP, EQUIPMENT, *LOGISTICS, *CHEMICAL AGENTS
0445 " CONTINGENCY PLANNING, SPILL CLEANUP, SPILL RESPONSE, GOVERNMENT AGENCIES, SPILL COOPERATIVES
0453 " CONTINGENCY PLANNING, ARGO MERCHANT SPILL, GUIDELINES, SPILL RESPONSE, *SCIENTIFIC RESPONSE
0496 " MOLLUSKS, METABOLISM, INVERTEBRATES, *CAROTENOIDS
0507 " CONTAMINATION, BIRDS, BASELINE STUDIES, ARGO MERCHANT SPILL, MARINE MAMMALS, MASSACHUSETTS
0527 " DISPERSION, OIL SLICKS, SEA SURFACE, PHYSICAL EFFECTS, MODELS, *WIND WAVES
0530 " ECONOMIC EFFECTS, COST ANALYSIS, OIL SPILLS, SOCIAL EFFECTS
0532 " ECONOMIC EFFECTS, COMPENSATION, SPILL CLEANUP, SHIPS, EPA, ST. LAWRENCE RIVER, *NEPCO 140 SPILL
0533 " ECONOMIC EFFECTS, FISHERIES, POLLUTION CONTROL, LEGISLATION, REGULATIONS, JAPAN
0534 " ECOSYSTEMS, CONTINGENCY PLANNING, OIL SPILLS, SPILL CLEANUP, RECOVERY
0536 " COASTAL WATERS, OIL SPILLS, FATE, METULA SPILL, URQUIOLA SPILL, *VULNERABILITY INDEX
0538 " BENTHOS, ARGO MERCHANT SPILL, MARINE ORGANISMS, FISH, ZOOPLANKTON, TANKERS, MASSACHUSETTS
0539 " ECOSYSTEMS, CORAL REEFS, COASTAL WATERS, VEGETATION, PUERTO RICO, *RHIZOPHORA MANGLE, *VULNERABILITY
0540 " CHROMATOGRAPHY, BIOLOGICAL EFFECTS, BIODEGRADATION, MONITORING, ONSHORE IMPACTS, SEDIMENTS, INTERTIDAL ZONE, RESTORATION, TROPICAL REGIONS, RECOVERY, PUERTO RICO
0541 " DISPERSANTS, BIOLOGICAL EFFECTS, AMOCO CADIZ SPILL, OIL SPILLS, RECOVERY, MARINE ORGANISMS, SPILL CLEANUP
0542 " EIS, DRILLING , CANADA, BASELINE STUDIES, ARCTIC, EXPLORATION , OIL FIELDS, SUBARCTIC REGIONS
0544 " DEVELOPMENT , BASELINE STUDIES, ALASKA , OIL-GAS LEASING, MARINE ENVIRONMENT
0546 " EIS, DEVELOPMENT , ONSHORE IMPACTS, SOCIOECONOMIC EFFECTS, OCS, MISSISSIPPI, GULF OF MEXICO
0548 " DEEPWATER PORTS, COST ANALYSIS, SOCIOECONOMIC EFFECTS, REFINERIES, PETROCHEMICALS, OIL TRANSPORT, STORAGE, NORTH CAROLINA
0549 " BIBLIOGRAPHIES, OCS, OFFSHORE DEVELOPMENT, SOCIOECONOMIC EFFECTS, ONSHORE IMPACTS, OIL-GAS LEASING, TEXAS
0560 " BAYS, FISH, WILDLIFE, MARSHES, SPILL CLEANUP, SHIPS, ST. LAWRENCE RIVER, *NEPCO 140 SPILL
0562 " ECOSYSTEMS, CHRONIC EFFECTS, ESTUARIES, HEALTH HAZARDS, GULF OF MEXICO
0564 " COASTAL WATERS, PETROLEUM PRODUCTS, ESTUARIES
0565 " SOURCES, MARINE ENVIRONMENT, MEDITERRANEAN SEA
0566 " BIOLOGICAL EFFECTS, TANKERS, FISH, FATE, *DRUPA SPILL
0567 " CHILE, BEACHES, OIL SPILLS, METULA SPILL, STRAIT OF MAGELLAN, TANKERS, MARSHES
0568 " CHILE, BIOLOGICAL EFFECTS, OIL SPILLS, RECOVERY, ONSHORE IMPACTS, INTERTIDAL ZONE, SPILL CLEANUP, METULA SPILL, STRAIT OF MAGELLAN
0574 " COASTAL ZONE MANAGEMENT, COASTAL WATERS, ESTUARIES, POLLUTION CONTROL, US, *PROCEEDINGS
0575 " ECOSYSTEMS, CHRONIC EFFECTS, SUBLETHAL EFFECTS, ESTUARIES, MARSHES, PETROLEUM PRODUCTS, PHYSICAL EFFECTS
0576 " CONTINGENCY PLANNING, BIRDS, BIOLOGICAL EFFECTS, BEAUFORT SEA, OIL SPILLS, SPILL RESPONSE, FATE, MOVEMENT, TOXICITY, PLANKTON, MARINE MAMMALS, FISH, *SCIENTIFIC RESPONSE
0597 " DISPERSANTS, BEHAVIOR, MODELS, FATE, OIL SPILLS, SPILL RESPONSE, SPILL CLEANUP, RISK ANALYSIS, SOURCE IDENTIFICATION
0602 " ALASKA , MODELS, PREDICTIONS, TANKERS, PORTS
0607 " DISPERSANTS, BIOLOGICAL EFFECTS, MODELS, FISHERIES, OIL SPILLS, FISH, FATE, GEORGES BANK
0609 " ECONOMICS, OCS, OFFSHORE DEVELOPMENT, MODELS, OIL SPILLS, ESTUARIES, GROUNDWATER, WATER QUALITY
0626 " ECONOMICS, COST ANALYSIS, COASTAL ZONE MANAGEMENT, OIL SPILLS, RESOURCE MANAGEMENT
0633 " COASTAL ZONE MANAGEMENT, ESTUARIES, OIL TRANSFER, REFINERIES, PETROCHEMICALS, INDUSTRIES, GOVERNMENT AGENCIES
0635 " COASTAL ZONE MANAGEMENT, OCS, OFFSHORE DEVELOPMENT, OIL-GAS LEASING, ONSHORE IMPACTS, SOCIOECONOMIC EFFECTS, LOUISIANA
0637 " DEVELOPMENT , ONSHORE IMPACTS, PIPELINES, OIL SPILLS, OCS, RESOURCE MANAGEMENT, GOVERNMENT AGENCIES, GEORGIA
0639 " DRILLING , COASTAL WATERS, OFFSHORE EXPLORATION, OFFSHORE PRODUCTION, ESTUARIES, GULF OF MEXICO

0640 ENVIRONMENTAL EFFECTS, BIOLOGICAL EFFECTS, BASELINE STUDIES, ARCTIC, PHYSICAL EFFECTS, OIL SPILLS, SOCIOECONOMIC EFFECTS, MICROORGANISMS, FISH, FISHERIES, NORTH SEA, OCS, OFFSHORE DEVELOPMENT
0644 " ATLANTIC OCEAN, FISHERIES, OCS, OFFSHORE DEVELOPMENT, REGULATIONS, ONSHORE IMPACTS, OIL INDUSTRY, SOCIOECONOMIC EFFECTS
0646 " OCS, OFFSHORE DEVELOPMENT, US, FISHERIES, FISH, *RESEARCH PROJECTS
0647 " OFFSHORE DEVELOPMENT, FISHERIES, OIL INDUSTRY, RESOURCE MANAGEMENT, GEORGES BANK
0648 " OFFSHORE EXPLORATION, OFFSHORE PRODUCTION, OCS, REFINING, OIL TRANSPORT, PETROLEUM PRODUCTS, GULF OF MEXICO, *CONFERENCE
0650 " SOCIOECONOMIC EFFECTS, OFFSHORE DEVELOPMENT, OCS, GULF OF MEXICO, LOUISIANA
0652 " CHILE, OIL SPILLS, SPILL RESPONSE, MOVEMENT, SPREADING, METULA SPILL, STRAIT OF MAGELLAN
0656 " COST ANALYSIS, BIBLIOGRAPHIES, PIPELINES, OFFSHORE DEVELOPMENT, OCS, OIL TRANSPORT, OIL TRANSFER
0674 " DETECTION, SOURCES
R034 " BIOLOGICAL EFFECTS, ANIMALS, MARINE MAMMALS, HABITATS, OIL SPILLS, MARINE ENVIRONMENT, *SEA OTTERS
R037 " BIOLOGICAL EFFECTS, BEHAVIOR, FISH, MARINE ENVIRONMENT, REPRODUCTION, GROWTH, TOXICITY, MONITORING
R038 " ECOSYSTEMS, BIOLOGICAL EFFECTS, ANALYTICAL TECHNIQUES, HYDROCARBONS , MARINE ORGANISMS, TOXICITY, FATE, SUBARCTIC REGIONS, NOAA
R040 " ATLANTIC COAST, RISK ANALYSIS, OIL SPILLS, OCS, OFFSHORE DEVELOPMENT, MODELS
R042 " DISTRIBUTION, CONCENTRATIONS, BENTHOS, BEAUFORT SEA, BASELINE STUDIES, ALASKA , HYDROCARBONS , OFFSHORE DEVELOPMENT, OFFSHORE PRODUCTION
R043 " EIS, OIL INDUSTRY
R044 " BIOASSAY, AQUATIC ENVIRONMENT, TOXICITY, WASTEWATERS, GREAT LAKES
R045 " ECOSYSTEMS, CONTAMINANTS, OIL FIELDS, GULF OF MEXICO
R046 " CONTINGENCY PLANNING, ANALYTICAL TECHNIQUES, OIL SPILLS, INFORMATION SYSTEMS, SPILL RESPONSE
R048 " BIOLOGICAL EFFECTS, MARINE ENVIRONMENT, FOOD WEB, SOURCE IDENTIFICATION
0463 ENVIRONMENTAL MANAGEMENT, COMPENSATION, LEGISLATION, OIL SPILLS, POLLUTION CONTROL, UK
0464 " ALASKA , OCS, REGULATIONS, LEGISLATION
0543 " BLM, BASELINE STUDIES, ALASKA , OCS, NOAA, GOVERNMENT AGENCIES, MODELS
0547 " DEVELOPMENT , BASELINE STUDIES, ENVIRONMENTAL PROTECTION, OIL INDUSTRY, RISK ANALYSIS, PERSIAN GULF, KUWAIT, *UNEP
0555 " COMPENSATION, OIL SPILLS, LEGISLATION, *DAMAGE ASSESSMENT
0643 " ECOSYSTEMS, ECONOMIC EFFECTS, BIOLOGICAL EFFECTS, ALASKA , SOCIOECONOMIC EFFECTS, TANKERS, SAFETY, LIABILITY, OCS, OIL INDUSTRY, POLLUTION CONTROL, FISHERIES, GULF OF ALASKA
0434 ENVIRONMENTAL PROTECTION, DISPERSANTS, CONTINGENCY PLANNING, SPILL CLEANUP, GUIDELINES
0473 " DISPOSAL , DEVELOPMENT , POLLUTION CONTROL, PORTS , WASTEWATERS, ESTUARIES, REGULATIONS, US, INDUSTRIES, GOVERNMENT AGENCIES
0547 " ENVIRONMENTAL MANAGEMENT, DEVELOPMENT , BASELINE STUDIES, OIL INDUSTRY, RISK ANALYSIS, PERSIAN GULF, KUWAIT, *UNEP
0629 " DEVELOPMENT , REGULATIONS, OCS, OFFSHORE DEVELOPMENT, MONITORING
0651 " ENVIRONMENTAL DETERIORATION, DEVELOPMENT , EXPLORATION , RESOURCE MANAGEMENT, WILDLIFE
0655 " PIPELINES, OIL SPILLS, GOVERNMENT AGENCIES, SAFETY, LEGISLATION, POLLUTION PREVENTION, REGULATIONS
0661 " ALASKA , LEGISLATION, SAFETY, POLLUTION PREVENTION
0678 " ECOSYSTEMS, COASTAL ZONE MANAGEMENT, ALASKA , OIL TRANSPORT, RESOURCE MANAGEMENT, *PUBLIC PARTICIPATION
0386 EPA, DESIGN-ENGINEERING, BOOMS, SPILL CONTAINMENT, OIL SLICKS, EQUIPMENT, *PERFORMANCE TESTING, *OHMSETT FACILITY
0413 " DESIGN-ENGINEERING, BOOMS, SPILL CLEANUP, SKIMMERS, EQUIPMENT, USCG, *PERFORMANCE TESTING, *OHMSETT FACILITY
0420 " DESIGN-ENGINEERING, SPILL CLEANUP, SKIMMERS, EQUIPMENT, *PERFORMANCE TESTING, *OHMSETT FACILITY
0451 " SPILL RESPONSE, GOVERNMENT AGENCIES, RESOURCE MANAGEMENT, *US FISH AND WILDLIFE SERVICE
0532 " ENVIRONMENTAL EFFECTS, ECONOMIC EFFECTS, COMPENSATION, SPILL CLEANUP, SHIPS, ST. LAWRENCE RIVER, *NEPCO 140 SPILL
0630 " CONTINGENCY PLANNING, OIL INDUSTRY, POLLUTION PREVENTION, PRODUCTION , REGULATIONS, LAW ENFORCEMENT, *STRIPPER WELLS
0659 " CONTINGENCY PLANNING, COASTS, STORAGE, OIL TANKS, POLLUTION PREVENTION, USN, REGULATIONS, INLAND
R022 " BOOMS, SPILL CONTAINMENT, SORBENTS, *PERFORMANCE TESTING, *OHMSETT FACILITY
R023 " BOOMS, SPILL CONTAINMENT, EQUIPMENT, *PERFORMANCE TESTING, *AIR JET BOOM, *OHMSETT FACILITY
R024 " DOE, BOOMS, SPILL CLEANUP, SKIMMERS, EQUIPMENT, *PERFORMANCE TESTING, *OHMSETT FACILITY
R066 " DOE, CHEMICAL ANALYSIS, ACTIVATED SLUDGE, WASTEWATER TREATMENT, REFINERIES, GC/MS, *ACTIVATED CARBON
0349 EQUIPMENT, COASTAL WATERS, REMOTE SENSING, SURVEILLANCE, POLLUTION CONTROL, TANKERS, SHIPS, SWEDEN

0353 EQUIPMENT, DETECTION, CALIFORNIA, REMOTE SENSING, NATURAL SEEPAGE, OIL SLICKS, PLATFORMS, SURVEILLANCE, USCG, SANTA BARBARA CHANNEL, *RADAR SYSTEMS
0356 " BEAUFORT SEA, REMOTE SENSING, OIL SPILLS, SURVEILLANCE
0357 " REMOTE SENSING, MONITORING, SURVEILLANCE, USCG, LAW ENFORCEMENT, POLLUTION CONTROL, TANKERS, SHIPS, *AIREYE SYSTEM
0364 " CHEMICAL ANALYSIS, BIBLIOGRAPHIES, ANALYTICAL TECHNIQUES, SAMPLING, MONITORING, SURVEILLANCE, SPECTROMETRY
0382 " DESIGN-ENGINEERING, SPILL CONTAINMENT, SPILL REMOVAL, OIL TRANSFER, SHIPS, PATENT, *HYDRO-CARPET
0383 " DESIGN-ENGINEERING, BOOMS, SPILL CONTAINMENT, SPILL REMOVAL, PATENT
0384 " DESIGN-ENGINEERING, BOOMS, SPILL CONTAINMENT, SHIPS, PATENT
0385 " DESIGN-ENGINEERING, BLOWOUTS, ARCTIC, SPILL CONTAINMENT, SPILL REMOVAL, OCS, *UNDERWATER CONTAINMENT
0386 " EPA, DESIGN-ENGINEERING, BOOMS, SPILL CONTAINMENT, OIL SLICKS, *PERFORMANCE TESTING, *OHMSETT FACILITY
0388 " DISPERSION, DESIGN-ENGINEERING, SPILL CONTAINMENT
0389 " BOOMS, BEHAVIOR, SPILL CONTAINMENT, OIL SLICKS, MODELS, PHYSICAL EFFECTS
0390 " DESIGN-ENGINEERING, BOOMS, SPILL CONTAINMENT, FLOTATION, PATENT
0391 " DESIGN-ENGINEERING, BOOMS, SPILL CONTAINMENT, PATENT
0392 " DESIGN-ENGINEERING, BOOMS, SPILL CONTAINMENT
0394 " DESIGN-ENGINEERING, BOOMS, SPILL CONTAINMENT, PATENT
0395 " SPILL CONTAINMENT, SPILL REMOVAL, RIVERS, ICE, SKIMMERS
0398 " DESIGN-ENGINEERING, BOOMS, SPILL CONTAINMENT, PATENT, *TOW PLATES
0399 " SPILL CLEANUP, SPILL CONTAINMENT, INLAND, RIVERS, ICE, SORBENTS, *LAND SPILLS
0400 " DESIGN-ENGINEERING, SPILL CLEANUP, SPILL CONTAINMENT, PATENT
0404 " EMULSIONS, DISPERSANTS, BIODEGRADATION, AMOCO CADIZ SPILL, SPILL CLEANUP, SPILL REMOVAL, SORBENTS, *CHEMICAL AGENTS
0407 " DESIGN-ENGINEERING, SPILL CLEANUP, SKIMMERS, *CANADIAN COAST GUARD, *PERFORMANCE TESTING
0408 " DESIGN-ENGINEERING, SPILL REMOVAL, SPILL DISPOSAL, USCG, *DEBRIS DISPOSAL SYSTEMS
0409 " DESIGN-ENGINEERING, SPILL CLEANUP, SKIMMERS, FLOTATION, PATENT
0410 " CALIFORNIA, SPILL CLEANUP, SPILL RESPONSE, TANKERS, HARBORS, SANSINENA SPILL
0411 " INFORMATION SYSTEMS, SPILL CLEANUP, SPILL RESPONSE, USCG
0412 " DESIGN-ENGINEERING, SPILL REMOVAL, OIL-WATER SEPARATION, MONITORING, POLLUTION CONTROL, PATENT
0413 " EPA, DESIGN-ENGINEERING, BOOMS, SPILL CLEANUP, SKIMMERS, USCG, *PERFORMANCE TESTING, *OHMSETT FACILITY
0415 " DESIGN-ENGINEERING, BOOMS, SPILL CLEANUP, SKIMMERS, SHIPS, *FIELD TESTS, *AIR CUSHION VEHICLES
0417 " DESIGN-ENGINEERING, SPILL CLEANUP, SKIMMERS, PATENT
0418 " DESIGN-ENGINEERING, SPILL CLEANUP, SKIMMERS, PATENT
0419 " BUZZARDS BAY, BOUCHARD 65 SPILL, BOOMS, SPILL CLEANUP, ICE, FUEL OIL, SKIMMERS, INCINERATION
0420 " EPA, DESIGN-ENGINEERING, SPILL CLEANUP, SKIMMERS, *PERFORMANCE TESTING, *OHMSETT FACILITY
0424 " CALIFORNIA, SPILL CLEANUP, SPILL RESPONSE, TANKERS, HARBORS, USCG, SANSINENA SPILL
0425 " ENVIRONMENTAL EFFECTS, ECONOMICS, DISPERSANTS, BEACHES, SPILL CLEANUP, INTERTIDAL ZONE, SHORELINES
0430 " CONTINGENCY PLANNING, CARIBBEAN SEA, SPILL COOPERATIVES, SPILL CLEANUP, SPILL RESPONSE
0431 " SPILL RESPONSE, POLLUTION CONTROL, SHIPS, USCG, RIVERS, ICE, OIL REMOVAL, MISSISSIPPI RIVER
0438 " DISPERSANTS, DESIGN-ENGINEERING, CANADA, SPILL RESPONSE, SHIPS, *CANADIAN COAST GUARD
0439 " CONTINGENCY PLANNING, AMOCO CADIZ SPILL, SPILL RESPONSE, OIL SPILLS, SPILL CLEANUP, FRANCE
0440 " SPILL COOPERATIVES, SPILL RESPONSE, SPILL CLEANUP, OFFSHORE PRODUCTION, HARBORS
0442 " CONTINGENCY PLANNING, ATLANTIC OCEAN, SPILL COOPERATIVES, SPILL CLEANUP, SPILL RESPONSE, PERSONNEL TRAINING, OCS
0444 " ENVIRONMENTAL EFFECTS, DISPERSANTS, CONTINGENCY PLANNING, SPILL RESPONSE, SPILL CLEANUP, *LOGISTICS, *CHEMICAL AGENTS
0454 " CONTINGENCY PLANNING, SPILL COOPERATIVES, PERSONNEL TRAINING, SPILL CLEANUP, SPILL RESPONSE, GULF OF MEXICO
0455 " DISPERSANTS, CONTINGENCY PLANNING, SPILL RESPONSE, SPILL CLEANUP, SPREADING, OCEANS, SHORELINES
0456 " CONTINGENCY PLANNING, BOOMS, SPILL RESPONSE, SPILL CLEANUP, STRATEGIC PETROLEUM RESERVE, SKIMMERS, STORAGE, LOUISIANA
0467 " CONTINGENCY PLANNING, POLLUTION CONTROL, SPILL CLEANUP, FOREIGN GOVERNMENTS, GOVERNMENT AGENCIES, LEGISLATION, REGULATIONS, JAPAN
0469 " CONTINGENCY PLANNING, BOOMS, SPILL RESPONSE, RISK ANALYSIS, MODELS, SKIMMERS, *COMPUTER SIMULATIONS
0475 " CONTINGENCY PLANNING, BLACK SEA, REGULATIONS, LEGISLATION, FOREIGN GOVERNMENTS, GOVERNMENT AGENCIES, LAW ENFORCEMENT, SPILL CLEANUP, USSR
0476 " DESIGN-ENGINEERING, BALLAST , OIL-WATER SEPARATION, POLLUTION PREVENTION, TANKERS, FILTRATION

0477 EQUIPMENT, DRILLING , DESIGN-ENGINEERING, BLOWOUT PREVENTION, PATENT
0479 " DISPERSION, BIODEGRADATION, SPILL CONTAINMENT, SPILL CLEANUP, POLLUTION PREVENTION, SHIPS, TANKERS, SOURCES, STATISTICS, OIL SLICKS, SPREADING
0658 " CONTINGENCY PLANNING, CALIFORNIA, TANKERS, OIL TRANSFER, SPILL CLEANUP, *LIGHTERING OPERATIONS, *VLCC
0666 " DRILLING , DETECTION, OIL INDUSTRY, POLLUTION CONTROL, OIL TRANSPORT, OIL TRANSFER, STORAGE, PIPELINES, TANKERS, SPILL CONTAINMENT, SPILL REMOVAL, SPILL DISPOSAL
0670 " ECONOMICS, DISPOSAL , REFINERIES, PETROCHEMICALS, POLLUTION CONTROL, WASTEWATER TREATMENT, SOLID WASTES
R013 " DETECTION, ANALYTICAL TECHNIQUES, MONITORING, SURVEILLANCE
R023 " EPA, BOOMS, SPILL CONTAINMENT, *PERFORMANCE TESTING, *AIR JET BOOM, *OHMSETT FACILITY
R024 " EPA, DOE, BOOMS, SPILL CLEANUP, SKIMMERS, *PERFORMANCE TESTING, *OHMSETT FACILITY
R068 " DESIGN-ENGINEERING, ANALYTICAL TECHNIQUES, OIL-WATER SEPARATION, FRANCE, *PERFORMANCE TESTING
0352 ESTUARIES, DRIFT, DELAWARE BAY, REMOTE SENSING, SPREADING, MOVEMENT, MODELS, OIL SLICKS, SURVEILLANCE, *ESTUARINE FRONTS
0402 " COASTS, BEACHES, AMOCO CADIZ SPILL, SPILL RESPONSE, SPILL CLEANUP, SPILL DISPOSAL, SHORELINES, HARBORS, FRANCE
0473 " ENVIRONMENTAL PROTECTION, DISPOSAL , DEVELOPMENT , POLLUTION CONTROL, PORTS , WASTEWATERS, REGULATIONS, US, INDUSTRIES, GOVERNMENT AGENCIES
0484 " BIRDS, BIOLOGICAL EFFECTS
0505 " DISTRIBUTION, DEVELOPMENT , COASTAL WATERS, BIOLOGICAL EFFECTS, BENTHOS, INVERTEBRATES
0513 " DISTRIBUTION, BIOMASS, BIOLOGICAL EFFECTS, OIL SPILLS, ZOOPLANKTON, HYDROCARBONS
0562 " ENVIRONMENTAL EFFECTS, ECOSYSTEMS, CHRONIC EFFECTS, HEALTH HAZARDS, GULF OF MEXICO
0564 " ENVIRONMENTAL EFFECTS, COASTAL WATERS, PETROLEUM PRODUCTS
0569 " ENVIRONMENTAL DETERIORATION, ECONOMIC EFFECTS, COST ANALYSIS, CONTAMINANTS, COASTAL ZONE MANAGEMENT, OIL SPILLS
0574 " ENVIRONMENTAL EFFECTS, COASTAL ZONE MANAGEMENT, COASTAL WATERS, POLLUTION CONTROL, US, *PROCEEDINGS
0575 " ENVIRONMENTAL EFFECTS, ECOSYSTEMS, CHRONIC EFFECTS, SUBLETHAL EFFECTS, MARSHES, PETROLEUM PRODUCTS, PHYSICAL EFFECTS
0584 " ECOSYSTEMS, CHEMICAL ANALYSIS, OIL SPILLS, MOVEMENT, HYDROCARBONS , MICROORGANISMS, GC/MS
0587 " COASTS, BEHAVIOR, BEACHES, AMOCO CADIZ SPILL, FATE, SHORELINES, SEDIMENTS, PHYSICAL EFFECTS, FRANCE, *COASTAL PROCESSES, *VULNERABILITY INDEX
0601 " BEHAVIOR, MODELS, SPREADING, MOVEMENT, PREDICTIONS, PHYSICAL EFFECTS, *TIDAL SIMULATIONS
0609 " ENVIRONMENTAL EFFECTS, ECONOMICS, OCS, OFFSHORE DEVELOPMENT, MODELS, OIL SPILLS, GROUNDWATER, WATER QUALITY
0633 " ENVIRONMENTAL EFFECTS, COASTAL ZONE MANAGEMENT, OIL TRANSFER, REFINERIES, PETROCHEMICALS, INDUSTRIES, GOVERNMENT AGENCIES
0639 " ENVIRONMENTAL EFFECTS, DRILLING , COASTAL WATERS, OFFSHORE EXPLORATION, OFFSHORE PRODUCTION, GULF OF MEXICO
0641 " DEVELOPMENT , COASTAL WATERS, ALASKA , POLLUTION CONTOL, PRODUCTION , OIL TRANSPORT, PIPELINES, TANKERS, INDUSTRIES
R021 " DELAWARE, SOURCE IDENTIFICATION, SEDIMENTS, OIL DISCHARGES, *PHENOLIC COMPOUNDS, *URBAN RUNOFF
R052 " CRUDE OIL, BIODEGRADATION, BACTERIA, MICROORGANISMS, MARINE ENVIRONMENT, SEDIMENTS
0366 EVAPORATION, DISPERSANTS, CHEMICAL ANALYSIS, SAMPLING, OIL SPILLS, HYDROCARBONS , *OIL SPILL VAPORS
0591 " CHROMATOGRAPHY, CHEMICAL ANALYSIS, BUZZARDS BAY, BOUCHARD 65 SPILL, HYDROCARBONS , FUEL OIL, WEATHERING, SAMPLING, ICE, SHIPS
0616 " CHROMATOGRAPHY, BIODEGRADATION, FATE, SEDIMENTATION, SOLUTION, WEATHERING, FUEL OIL, HYDROCARBONS , MARINE ENVIRONMENT, ANALYTICAL TECHNQIUES
0621 " OIL SPILLS, FUEL OIL, FATE, TANKERS, GREENLAND, *POTOMAC SPILL
0542 EXPLORATION , ENVIRONMENTAL EFFECTS, EIS, DRILLING , CANADA, BASELINE STUDIES, ARCTIC, OIL FIELDS, SUBARCTIC REGIONS
0651 " ENVIRONMENTAL PROTECTION, ENVIRONMENTAL DETERIORATION, DEVELOPMENT , RESOURCE MANAGEMENT, WILDLIFE
0675 " PRODUCTION , OIL TRANSPORT, STORAGE, PIPELINES, REFINERIES, OIL SHALE, OIL SPILLS, OFFSHORE DEVELOPMENT, *ACCIDENTS
0380 FATE, CHROMATOGRAPHY, CHEMICAL ANALYSIS, ARGO MERCHANT SPILL, ANALYTICAL TECHNIQUES, SOURCE IDENTIFICATION, HYDROCARBONS , FISH, MASSACHUSETTS
0406 " ENVIRONMENTAL EFFECTS, DISPERSANTS, CRUDE OIL, BRAZIL, BEACHES, SPILL CLEANUP, SEDIMENTS, *BRAZILIAN MARINA SPILL
0414 " DISPERSANTS, OIL SLICKS, WEATHERING, SPILL CLEANUP, TOXICITY
0465 " BIOLOGICAL EFFECTS, INTERNATIONAL CONVENTIONS, REGULATIONS, IMCO, OIL TRANSPORT, TANKERS, SOURCES, *LONDON DUMPING CONVENTION
0535 " BEHAVIOR, RECOVERY, SPILL CLEANUP, PHYSICAL EFFECTS, MOVEMENT, OIL SPILLS, METULA SPILL, STRAIT OF MAGELLAN
0536 " ENVIRONMENTAL EFFECTS, COASTAL WATERS, OIL SPILLS, METULA SPILL, URQUIOLA SPILL, *VULNERABILITY INDEX

0566 FATE, ENVIRONMENTAL EFFECTS, BIOLOGICAL EFFECTS, TANKERS, FISH, *DRUPA SPILL
0573 " BUZZARDS BAY, FUEL OIL, SEDIMENTS, ICE, FLORIDA SPILL
0576 " ENVIRONMENTAL EFFECTS, CONTINGENCY PLANNING, BIRDS, BIOLOGICAL EFFECTS, BEAUFORT SEA, OIL SPILLS, SPILL RESPONSE, MOVEMENT, TOXICITY, PLANKTON, MARINE MAMMALS, FISH, *SCIENTIFIC RESPONSE
0583 " EKOFISK BLOWOUT, DRIFT, SPREADING, WEATHERING, STATISTICAL ANLYSIS, SEA SURFACE, NORTH SEA
0586 " DISTRIBUTION, CONCENTRATIONS, BEHAVIOR, BAYS, AMOCO CADIZ SPILL, SEDIMENTS, FRANCE
0587 " ESTUARIES, COASTS, BEHAVIOR, BEACHES, AMOCO CADIZ SPILL, SHORELINES, SEDIMENTS, PHYSICAL EFFECTS, FRANCE, *COASTAL PROCESSES, *VULNERABILITY INDEX
0592 " CHEMICAL EFFECTS, BIODEGRADATION, AQUATIC ENVIRONMENT, PHYSICAL EFFECTS
0593 " CHEMICAL ANALYSIS, BEACHES, SEDIMENTS, HYDROCARBONS , *ARROW SPILL
0595 " BLOWOUTS, BEHAVIOR, MODELS, OFFSHORE DEVELOPMENT
0597 " ENVIRONMENTAL EFFECTS, DISPERSANTS, BEHAVIOR, MODELS, OIL SPILLS, SPILL RESPONSE, SPILL CLEANUP, RISK ANALYSIS, SOURCE IDENTIFICATION
0607 " ENVIRONMENTAL EFFECTS, DISPERSANTS, BIOLOGICAL EFFECTS, MODELS, FISHERIES, OIL SPILLS, FISH, GEORGES BANK
0608 " DRIFT, BIOLOGICAL EFFECTS, BEHAVIOR, ATLANTIC OCEAN, MODELS, OIL SPILLS, FISHERIES, PREDICTIONS, FISH, SPREADING, MOVEMENT, GEORGES BANK, *COD
0610 " ANALYTICAL TECHNIQUES, PREDICTIONS, MOVEMENT, PHYSICAL EFFECTS, SAMPLING, GULF OF MEXICO
0613 " AROMATIC HYDROCARBONS, AQUATIC ENVIRONMENT, TOXICITY, FISH, UPTAKE, *PNA
0614 " DISPERSION, DISPERSANTS, BOOMS, OIL SPILLS, SPILL CONTAINMENT, SPREADING, MONITORING, MOVEMENT
0615 " COASTAL WATERS, SOURCES, SOURCE IDENTIFICATION, OCS, MONITORING, *POLLUTANT TRANSFER
0616 " EVAPORATION, CHROMATOGRAPHY, BIODEGRADATION, SEDIMENTATION, SOLUTION, WEATHERING, FUEL OIL, HYDROCARBONS , MARINE ENVIRONMENT, ANALYTICAL TECHNQIUES
0617 " EKOFISK BLOWOUT, DISTRIBUTION, CHEMICAL ANALYSIS, SPREADING, HYDROCARBONS , GC/MS, NORTH SEA
0619 " DISTRIBUTION, CHEMICAL EFFECTS, CALIFORNIA, BENTHOS, FUEL OIL, SEDIMENTS, HARBORS, SEDIMENTATION, INCINERATION, SANSINENA SPILL
0620 " HYDROCARBONS , PLANKTON, NORTH SEA, UK, *CHLOROPHYLL, *CARBON
0621 " EVAPORATION, OIL SPILLS, FUEL OIL, TANKERS, GREENLAND, *POTOMAC SPILL
0622 " CALIFORNIA, BIOLOGICAL EFFECTS, FUEL OIL, INCINERATION, WATER QUALITY, HARBORS, SANSINENA SPILL
0623 " DISTRIBUTION, CALIFORNIA, BIOLOGICAL EFFECTS, BEACHES, TAR, NATURAL SEEPAGE, SEDIMENTS, MARINE ORGANISMS, INTERTIDAL ZONE, SANTA BARBARA CHANNEL
0624 " BIOLOGICAL EFFECTS, BIODEGRADATION, BEHAVIOR, OIL SPILLS, MODELS, MOLLUSKS, FISHERIES, *RESEARCH PROGRAM
R028 " CHEMICAL EFFECTS, CHEMICAL ANALYSIS, BIOLOGICAL EFFECTS, BEHAVIOR, SPILL RESPONSE, INFORMATION SYSTEMS, SPILL TRAJECTORIES, PHYSICAL EFFECTS, *SCIENTIFIC RESPONSE
R038 " ENVIRONMENTAL EFFECTS, ECOSYSTEMS, BIOLOGICAL EFFECTS, ANALYTICAL TECHNIQUES, HYDROCARBONS , MARINE ORGANISMS, TOXICITY, SUBARCTIC REGIONS, NOAA
R039 " COASTS, BEAUFORT SEA, BASELINE STUDIES, ARCTIC, ICE, OCS, SEDIMENTS, OIL SPILLS, PREDICTIONS
R054 " CONTAMINANTS, ALASKA , ADSORPTION, SOURCES, SEDIMENTS, MOVEMENT, PRODUCTION , *COOK INLET
R055 " ARCTIC, ICE, OIL SPILLS, MOVEMENT, PREDICTIONS, *POOLING
R057 " BEHAVIOR, MODELS, OIL SLICKS, PREDICTIONS, SANTA BARBARA CHANNEL
R060 " DISTRIBUTION, CHEMICAL ANALYSIS, BUZZARDS BAY, BIOLOGICAL EFFECTS, ANALYTICAL TECHNIQUES, HYDROCARBONS , *NEW YORK BIGHT
0476 FILTRATION, EQUIPMENT, DESIGN-ENGINEERING, BALLAST , OIL-WATER SEPARATION, POLLUTION PREVENTION, TANKERS
R067 " WASTEWATERS, POLLUTION CONTROL, POLLUTION PREVENTION, REFINING, *MICELLAR FLOODING, *SULFONATES
0563 FINLAND, CONCENTRATIONS, BIOLOGICAL EFFECTS, BALTIC SEA, ANALYTICAL TECHNIQUES, SOURCE IDENTIFICATION, PHYTOPLANKTON, FISH, SWEDEN, USSR, *TAGGING
0347 FISH, DISTRIBUTION, CHROMATOGRAPHY, CHEMICAL ANALYSIS, CALIFORNIA, BIOINDICATORS, BENTHOS, HYDROCARBONS , SEDIMENTS, NATURAL SEEPAGE, OCS, SANTA BARBARA CHANNEL
0361 " CONTAMINATION, CHEMICAL ANALYSIS, SAMPLING, *SALMON, *SAITHE, *OIL TAINTING
0380 " FATE, CHROMATOGRAPHY, CHEMICAL ANALYSIS, ARGO MERCHANT SPILL, ANALYTICAL TECHNIQUES, SOURCE IDENTIFICATION, HYDROCARBONS , MASSACHUSETTS
0495 " CRUDE OIL, BIOLOGICAL EFFECTS, BARENTS SEA, WSF, REPRODUCTION, *HATCHING
0497 " DEVELOPMENT , CONTAMINATION, BIOLOGICAL EFFECTS, HYDROCARBONS , FUEL OIL, REPRODUCTION, SUBLETHAL EFFECTS, GROWTH, *PSEUDOPLEURONECTES AMERICANUS
0511 " CRUDE OIL, BENTHOS, ALASKA , WSF, FUEL OIL, TOXICITY, MARINE ORGANISMS, INVERTEBRATES, INTERTIDAL ZONE, *PELAGIC ZONE
0522 " DEVELOPMENT , CRUDE OIL, CHRONIC EFFECTS, BIOLOGICAL EFFECTS, BEHAVIOR, UPTAKE, WSF, GROWTH, FISH, *PLATICHTHYS STELLATUS
0525 " EKOFISK BLOWOUT, CONTAMINATION, BIOLOGICAL EFFECTS, BENTHOS, MOLLUSKS, SAMPLING, HYDROCARBONS , NORTH SEA
0528 " BIOLOGICAL EFFECTS, ABSORPTION, PETROLEUM PRODUCTS, FOOD WEB, *TAINTING
0538 " ENVIRONMENTAL EFFECTS, BENTHOS, ARGO MERCHANT SPILL, MARINE ORGANISMS, ZOOPLANKTON, TANKERS, MASSACHUSETTS

0560 FISH, ENVIRONMENTAL EFFECTS, BAYS, WILDLIFE, MARSHES, SPILL CLEANUP, SHIPS, ST. LAWRENCE RIVER, *NEPCO 140 SPILL
0563 " FINLAND, CONCENTRATIONS, BIOLOGICAL EFFECTS, BALTIC SEA, ANALYTICAL TECHNIQUES, SOURCE IDENTIFICATION, PHYTOPLANKTON, SWEDEN, USSR, *TAGGING
0566 " FATE, ENVIRONMENTAL EFFECTS, BIOLOGICAL EFFECTS, TANKERS, *DRUPA SPILL
0576 " FATE, ENVIRONMENTAL EFFECTS, CONTINGENCY PLANNING, BIRDS, BIOLOGICAL EFFECTS, BEAUFORT SEA, OIL SPILLS, SPILL RESPONSE, MOVEMENT, TOXICITY, PLANKTON, MARINE MAMMALS, *SCIENTIFIC RESPONSE
0607 " FATE, ENVIRONMENTAL EFFECTS, DISPERSANTS, BIOLOGICAL EFFECTS, MODELS, FISHERIES, OIL SPILLS, GEORGES BANK
0608 " FATE, DRIFT, BIOLOGICAL EFFECTS, BEHAVIOR, ATLANTIC OCEAN, MODELS, OIL SPILLS, FISHERIES, PREDICTIONS, SPREADING, MOVEMENT, GEORGES BANK, *COD
0613 " FATE, AROMATIC HYDROCARBONS, AQUATIC ENVIRONMENT, TOXICITY, UPTAKE, *PNA
0640 " ENVIRONMENTAL EFFECTS, BIOLOGICAL EFFECTS, BASELINE STUDIES, ARCTIC, PHYSICAL EFFECTS, OIL SPILLS, SOCIOECONOMIC EFFECTS, MICROORGANISMS, FISHERIES, NORTH SEA, OCS, OFFSHORE DEVELOPMENT
0646 " ENVIRONMENTAL EFFECTS, OCS, OFFSHORE DEVELOPMENT, US, FISHERIES, *RESEARCH PROJECTS
R032 " CRUDE OIL, CHRONIC EFFECTS, BIOLOGICAL EFFECTS, TOXICITY, OCS, TEXAS, *HISTOPATHOLOGY, *SCIAENIDEA
R036 " DISPERSANTS, CHEMICAL ANALYSIS, BIOLOGICAL EFFECTS, BASELINE STUDIES, ALASKA , HYDROCARBONS , SUBLETHAL EFFECTS, MARINE ORGANISMS, UPTAKE, METABOLISM, TOXICITY, FOOD WEB, *PATHOLOGY
R037 " ENVIRONMENTAL EFFECTS, BIOLOGICAL EFFECTS, BEHAVIOR, MARINE ENVIRONMENT, REPRODUCTION, GROWTH, TOXICITY, MONITORING
0531 FISHERIES, OFFSHORE DEVELOPMENT, OIL FIELDS, SOCIOECONOMIC EFFECTS, OCS, NORTH SEA, GULF OF ALASKA
0533 " ENVIRONMENTAL EFFECTS, ECONOMIC EFFECTS, POLLUTION CONTROL, LEGISLATION, REGULATIONS, JAPAN
0537 " LEAKAGE, OIL SPILLS, RECOVERY, RESTORATION, WATER QUALITY, FUEL OIL, JAPAN
0556 " COMPENSATION, ALASKA , LIABILITY, LEGISLATION, US GOVERNMENT
0598 " MODELS, SPILL RESPONSE, MOVEMENT, SPILL TRAJECTORIES, PREDICTIONS, GEORGES BANK
0607 " FISH, FATE, ENVIRONMENTAL EFFECTS, DISPERSANTS, BIOLOGICAL EFFECTS, MODELS, OIL SPILLS, GEORGES BANK
0608 " FISH, FATE, DRIFT, BIOLOGICAL EFFECTS, BEHAVIOR, ATLANTIC OCEAN, MODELS, OIL SPILLS, PREDICTIONS, SPREADING, MOVEMENT, GEORGES BANK, *COD
0624 " FATE, BIOLOGICAL EFFECTS, BIODEGRADATION, BEHAVIOR, OIL SPILLS, MODELS, MOLLUSKS, *RESEARCH PROGRAM
0640 " FISH, ENVIRONMENTAL EFFECTS, BIOLOGICAL EFFECTS, BASELINE STUDIES, ARCTIC, PHYSICAL EFFECTS, OIL SPILLS, SOCIOECONOMIC EFFECTS, MICROORGANISMS, NORTH SEA, OCS, OFFSHORE DEVELOPMENT
0642 " COMPENSATION, COASTAL ZONE MANAGEMENT, COASTAL WATERS, OFFSHORE DEVELOPMENT, OCS, OIL-GAS LEASING, ONSHORE IMPACTS, SOCIOECONOMIC EFFECTS
0643 " ENVIRONMENTAL MANAGEMENT, ECOSYSTEMS, ECONOMIC EFFECTS, BIOLOGICAL EFFECTS, ALASKA , SOCIOECONOMIC EFFECTS, TANKERS, SAFETY, LIABILITY, OCS, OIL INDUSTRY, POLLUTION CONTROL, GULF OF ALASKA
0644 " ENVIRONMENTAL EFFECTS, ATLANTIC OCEAN, OCS, OFFSHORE DEVELOPMENT, REGULATIONS, ONSHORE IMPACTS, OIL INDUSTRY, SOCIOECONOMIC EFFECTS
0646 " FISH, ENVIRONMENTAL EFFECTS, OCS, OFFSHORE DEVELOPMENT, US, *RESEARCH PROJECTS
0647 " ENVIRONMENTAL EFFECTS, OFFSHORE DEVELOPMENT, OIL INDUSTRY, RESOURCE MANAGEMENT, GEORGES BANK
0649 " OFFSHORE DEVELOPMENT, OIL INDUSTRY, OCS, OIL-GAS LEASING, GEORGES BANK
0668 FLOCCULATION, BALLAST , AROMATIC HYDROCARBONS, ANALYTICAL TECHNIQUES, ALASKA , OIL REMOVAL, WASTEWATER TREATMENT, MONITORING, GRAVITY SEPARATION, HYDROCARBONS
0573 FLORIDA SPILL, FATE, BUZZARDS BAY, FUEL OIL, SEDIMENTS, ICE
0390 FLOTATION, EQUIPMENT, DESIGN-ENGINEERING, BOOMS, SPILL CONTAINMENT, PATENT
0409 " EQUIPMENT, DESIGN-ENGINEERING, SPILL CLEANUP, SKIMMERS, PATENT
0509 FOOD WEB, CARCINOGENS, BIOLOGICAL EFFECTS, AROMATIC HYDROCARBONS, SOURCES, MARINE ORGANISMS, MARINE ENVIRONMENT, *AHH
0528 " FISH, BIOLOGICAL EFFECTS, ABSORPTION, PETROLEUM PRODUCTS, *TAINTING
R036 " FISH, DISPERSANTS, CHEMICAL ANALYSIS, BIOLOGICAL EFFECTS, BASELINE STUDIES, ALASKA , HYDROCARBONS , SUBLETHAL EFFECTS, MARINE ORGANISMS, UPTAKE, METABOLISM, TOXICITY, *PATHOLOGY
R041 " BIOGENIC HYDROCARBONS, BASELINE STUDIES, ANTARCTICA, HYDROCARBONS , OFFSHORE PRODUCTION, *KRILL
R048 " ENVIRONMENTAL EFFECTS, BIOLOGICAL EFFECTS, MARINE ENVIRONMENT, SOURCE IDENTIFICATION
0432 FOREIGN GOVERNMENTS, CONTINGENCY PLANNING, INTERNATIONAL AGREEMENTS, POLLUTION CONTROL, LAW ENFORCEMENT, IMCO, MEDITERRANEAN SEA, *ROCC, *UNEP
0448 " DISPERSANTS, CONTINGENCY PLANNING, AUSTRALIA, SPILL CLEANUP, POLLUTION CONTROL, OIL INDUSTRY
0466 " RESOURCE MANAGEMENT, INTERNATIONAL CONVENTIONS, LEGISLATION, REGULATIONS, *LAW OF THE SEA
0467 " EQUIPMENT, CONTINGENCY PLANNING, POLLUTION CONTROL, SPILL CLEANUP, GOVERNMENT AGENCIES, LEGISLATION, REGULATIONS, JAPAN
0471 " AUSTRALIA, POLLUTION PREVENTION, POLLUTION CONTROL, *PROCEEDINGS

0475 FOREIGN GOVERNMENTS, EQUIPMENT, CONTINGENCY PLANNING, BLACK SEA, REGULATIONS, LEGISLATION, GOVERNMENT AGENCIES, LAW ENFORCEMENT, SPILL CLEANUP, USSR
0653 " CHILE, OIL SPILLS, SPILL RESPONSE, TANKERS, OIL TRANSFER, METULA SPILL, STRAIT OF MAGELLAN
0402 FRANCE, ESTUARIES, COASTS, BEACHES, AMOCO CADIZ SPILL, SPILL RESPONSE, SPILL CLEANUP, SPILL DISPOSAL, SHORELINES, HARBORS
0439 " EQUIPMENT, CONTINGENCY PLANNING, AMOCO CADIZ SPILL, SPILL RESPONSE, OIL SPILLS, SPILL CLEANUP
0586 " FATE, DISTRIBUTION, CONCENTRATIONS, BEHAVIOR, BAYS, AMOCO CADIZ SPILL, SEDIMENTS
0587 " FATE, ESTUARIES, COASTS, BEHAVIOR, BEACHES, AMOCO CADIZ SPILL, SHORELINES, SEDIMENTS, PHYSICAL EFFECTS, *COASTAL PROCESSES, *VULNERABILITY INDEX
R068 " EQUIPMENT, DESIGN-ENGINEERING, ANALYTICAL TECHNIQUES, OIL-WATER SEPARATION, *PERFORMANCE TESTING
0491 FRESHWATER, BIOLOGICAL EFFECTS, BIBLIOGRAPHIES, ANIMALS, OIL SPILLS, METABOLISM, MICROORGANISMS, PLANTS, SEAWATER
0514 " DISPERSANTS, BIOLOGICAL EFFECTS, BACTERIA, ZOOPLANKTON, FUNGI, MICROORGANISMS
0515 " ECOSYSTEMS, CRUDE OIL, BIOLOGICAL EFFECTS, BACTERIA, OIL SPILLS, PLANKTON, ICE
R033 " ECOSYSTEMS, BIOMASS, BIOLOGICAL EFFECTS, ARCTIC, ALGAE, ALASKA , OIL SPILLS, ZOOPLANKTON, REPRODUCTION, UPTAKE, *TUNDRA PONDS
0401 FUEL OIL, OIL SPILLS, SPILL CLEANUP, ICE, INCINERATION, GREAT LAKES, *IMPERIAL ST. CLAIR SPILL
0416 " SPILL CLEANUP, SHORELINES, SHIPS, ST. LAWRENCE RIVER, *NEPCO 140 SPILL
0419 " EQUIPMENT, BUZZARDS BAY, BOUCHARD 65 SPILL, BOOMS, SPILL CLEANUP, ICE, SKIMMERS, INCINERATION
0423 " SPILL CONTAINMENT, SPILL CLEANUP, SPILL REMOVAL, GROUNDWATER, LEAKAGE, OILDISCHARGES, PENNSYLVANIA, STORAGE
0482 " CHESAPEAKE BAY, BIOLOGICAL EFFECTS, BENTHOS, INVERTEBRATES, INTERTIDAL ZONE, SHIPS, *BARGE STC-101 SPILL
0494 " BEHAVIOR, TOXICITY, WSF, SUBLETHAL EFFECTS, MOLLUSKS, *FEEDING, *CHEMORECEPTION, *ILYANASSA OBSOLETA
0497 " FISH, DEVELOPMENT , CONTAMINATION, BIOLOGICAL EFFECTS, HYDROCARBONS , REPRODUCTION, SUBLETHAL EFFECTS, GROWTH, *PSEUDOPLEURONECTES AMERICANUS
0498 " DEVELOPMENT , AROMATIC HYDROCARBONS, WSF, TOXICITY, MORTALITY, SUBLETHAL EFFECTS, RESPIRATION, GROWTH, METABOLISM, *RHITHROPANOPEUS HARISSI, *LIMULUS POLYPHEMUS
0511 " FISH, CRUDE OIL, BENTHOS, ALASKA , WSF, TOXICITY, MARINE ORGANISMS, INVERTEBRATES, INTERTIDAL ZONE, *PELAGIC ZONE
0524 " DISPERSANTS, CRUDE OIL, CHEMICAL ANALYSIS, BIOLOGICAL EFFECTS, PETROLEUM PRODUCTS, TOXICITY
0537 " FISHERIES, LEAKAGE, OIL SPILLS, RECOVERY, RESTORATION, WATER QUALITY, JAPAN
0573 " FLORIDA SPILL, FATE, BUZZARDS BAY, SEDIMENTS, ICE
0585 " BUZZARDS BAY, BOUCHARD 65 SPILL, ICE, MOVEMENT, OIL SPILLS, MODELS
0590 " DISPERSANTS, CRUDE OIL, BEHAVIOR, BEACHES, SHORELINES, SEDIMENTS
0591 " EVAPORATION, CHROMATOGRAPHY, CHEMICAL ANALYSIS, BUZZARDS BAY, BOUCHARD 65 SPILL, HYDROCARBONS , WEATHERING, SAMPLING, ICE, SHIPS
0616 " FATE, EVAPORATION, CHROMATOGRAPHY, BIODEGRADATION, SEDIMENTATION, SOLUTION, WEATHERING, HYDROCARBONS , MARINE ENVIRONMENT, ANALYTICAL TECHNQIUES
0619 " FATE, DISTRIBUTION, CHEMICAL EFFECTS, CALIFORNIA, BENTHOS, SEDIMENTS, HARBORS, SEDIMENTATION, INCINERATION, SANSINENA SPILL
0621 " FATE, EVAPORATION, OIL SPILLS, TANKERS, GREENLAND, *POTOMAC SPILL
0622 " FATE, CALIFORNIA, BIOLOGICAL EFFECTS, INCINERATION, WATER QUALITY, HARBORS, SANSINENA SPILL
0514 FUNGI, FRESHWATER, DISPERSANTS, BIOLOGICAL EFFECTS, BACTERIA, ZOOPLANKTON, MICROORGANISMS
0360 GC/MS, CHEMICAL ANALYSIS, BIOGENIC HYDROCARBONS, BENTHOS, ARGO MERCHANT SPILL, HYDROCARBONS , PAH, WSF, SEA SURFACE, SEDIMENTS, MARINE ORGANISMS, ZOOPLANKTON, SOURCES, TANKERS, GEORGES BANK
0370 " CHEMICAL ANALYSIS, AROMATIC HYDROCARBONS, AMOCO CADIZ SPILL, SAMPLING, PAH, OXIDATION, UPTAKE, MARINE ORGANISMS, SEDIMENTS, *MOUSSE
0376 " CONCENTRATIONS, CHILE, CHEMICAL ANALYSIS, BIOLOGICAL EFFECTS, OIL SPILLS, SAMPLING, SEDIMENTS, WEATHERING, ONSHORE IMPACTS, METULA SPILL, STRAIT OF MAGELLAN
0584 " ESTUARIES, ECOSYSTEMS, CHEMICAL ANALYSIS, OIL SPILLS, MOVEMENT, HYDROCARBONS , MICROORGANISMS
0617 " FATE, EKOFISK BLOWOUT, DISTRIBUTION, CHEMICAL ANALYSIS, SPREADING, HYDROCARBONS , NORTH SEA
0618 " EKOFISK BLOWOUT, CONTAMINATION, CHEMICAL ANALYSIS, BENTHOS, SEDIMENTS, HYDROCARBONS , NORTH SEA
R019 " CHROMATOGRAPHY, ANALYTICAL TECHNIQUES, HYDROCARBONS , SEDIMENTS, MARINE ENVIRONMENT
R066 " EPA, DOE, CHEMICAL ANALYSIS, ACTIVATED SLUDGE, WASTEWATER TREATMENT, REFINERIES, *ACTIVATED CARBON
0360 GEORGES BANK, GC/MS, CHEMICAL ANALYSIS, BIOGENIC HYDROCARBONS, BENTHOS, ARGO MERCHANT SPILL, HYDROCARBONS , PAH, WSF, SEA SURFACE, SEDIMENTS, MARINE ORGANISMS, ZOOPLANKTON, SOURCES, TANKERS
0598 " FISHERIES, MODELS, SPILL RESPONSE, MOVEMENT, SPILL TRAJECTORIES, PREDICTIONS
0607 " FISHERIES, FISH, FATE, ENVIRONMENTAL EFFECTS, DISPERSANTS, BIOLOGICAL EFFECTS, MODELS, OIL SPILLS

0608 GEORGES BANK, FISHERIES, FISH, FATE, DRIFT, BIOLOGICAL EFFECTS, BEHAVIOR, ATLANTIC OCEAN, MODELS, OIL SPILLS, PREDICTIONS, SPREADING, MOVEMENT, *COD
0647 " FISHERIES, ENVIRONMENTAL EFFECTS, OFFSHORE DEVELOPMENT, OIL INDUSTRY, RESOURCE MANAGEMENT
0649 " FISHERIES, OFFSHORE DEVELOPMENT, OIL INDUSTRY, OCS, OIL-GAS LEASING
0637 GEORGIA, ENVIRONMENTAL EFFECTS, DEVELOPMENT , ONSHORE IMPACTS, PIPELINES, OIL SPILLS, OCS, RESOURCE MANAGEMENT, GOVERNMENT AGENCIES
0350 GOVERNMENT AGENCIES, REMOTE SENSING, SURVEILLANCE, MONITORING, POLLUTION CONTROL, MODELS, *NASA, *SATELLITES
0435 " CONTINGENCY PLANNING, SPILL RESPONSE, USCG, SPILL CLEANUP, POLLUTION CONTROL, *NATIONAL RESPONSE CENTER
0441 " CONTINGENCY PLANNING, CANADA, BEAUFORT SEA, SPILL RESPONSE, *BREX III FIELD EXERCISE
0445 " ENVIRONMENTAL EFFECTS, CONTINGENCY PLANNING, SPILL CLEANUP, SPILL RESPONSE, SPILL COOPERATIVES
0450 " CONTINGENCY PLANNING, SPILL RESPONSE, SPILL CLEANUP, TANKERS, USCG, LIABILITY, MASSACHUSETTS, *GLOBAL HOPE SPILL
0451 " EPA, SPILL RESPONSE, RESOURCE MANAGEMENT, *US FISH AND WILDLIFE SERVICE
0467 " FOREIGN GOVERNMENTS, EQUIPMENT, CONTINGENCY PLANNING, POLLUTION CONTROL, SPILL CLEANUP, LEGISLATION, REGULATIONS, JAPAN
0468 " POLLUTION CONTROL, TANKERS, OIL DISCHARGES, POLLUTION PREVENTION, UK
0473 " ESTUARIES, ENVIRONMENTAL PROTECTION, DISPOSAL , DEVELOPMENT , POLLUTION CONTROL, PORTS , WASTEWATERS, REGULATIONS, US, INDUSTRIES
0475 " FOREIGN GOVERNMENTS, EQUIPMENT, CONTINGENCY PLANNING, BLACK SEA, REGULATIONS, LEGISLATION, LAW ENFORCEMENT, SPILL CLEANUP, USSR
0543 " ENVIRONMENTAL MANAGEMENT, BLM, BASELINE STUDIES, ALASKA , OCS, NOAA, MODELS
0633 " ESTUARIES, ENVIRONMENTAL EFFECTS, COASTAL ZONE MANAGEMENT, OIL TRANSFER, REFINERIES, PETROCHEMICALS, INDUSTRIES
0637 " GEORGIA, ENVIRONMENTAL EFFECTS, DEVELOPMENT , ONSHORE IMPACTS, PIPELINES, OIL SPILLS, OCS, RESOURCE MANAGEMENT
0655 " ENVIRONMENTAL PROTECTION, PIPELINES, OIL SPILLS, SAFETY, LEGISLATION, POLLUTION PREVENTION, REGULATIONS
0657 " CONTINGENCY PLANNING, ALASKA , PORTS , OIL TERMINALS, OIL TRANSPORT, INDUSTRIES, SPILL RESPONSE, SPILL CLEANUP, USCG, *PORT VALDEZ
0667 GRAVITY SEPARATION, WASTEWATER TREATMENT, OIL-WATER SEPARATION, SLUDGE , REUSE, PATENT
0668 " FLOCCULATION, BALLAST , AROMATIC HYDROCARBONS, ANALYTICAL TECHNIQUES, ALASKA , OIL REMOVAL, WASTEWATER TREATMENT, MONITORING, HYDROCARBONS
0401 GREAT LAKES, FUEL OIL, OIL SPILLS, SPILL CLEANUP, ICE, INCINERATION, *IMPERIAL ST. CLAIR SPILL
R044 " ENVIRONMENTAL EFFECTS, BIOASSAY, AQUATIC ENVIRONMENT, TOXICITY, WASTEWATERS
0621 GREENLAND, FUEL OIL, FATE, EVAPORATION, OIL SPILLS, TANKERS, *POTOMAC SPILL
0423 GROUNDWATER, FUEL OIL, SPILL CONTAINMENT, SPILL CLEANUP, SPILL REMOVAL, LEAKAGE, OILDISCHARGES, PENNSYLVANIA, STORAGE
0581 " EMULSIONS, CHEMICAL ANALYSIS, BIODEGRADATION, HYDROCARBONS , SOIL, MODELS, RESPIRATION
0609 " ESTUARIES, ENVIRONMENTAL EFFECTS, ECONOMICS, OCS, OFFSHORE DEVELOPMENT, MODELS, OIL SPILLS, WATER QUALITY
R058 " CONTAMINATION, MODELS, PREDICTIONS, OIL SHALE
0488 GROWTH, CHRONIC EFFECTS, BIRDS, BIOLOGICAL EFFECTS, ACUTE EFFECTS, TOXICITY, HYDROCARBONS , REPRODUCTION
0489 " CRUSTACEANS, CRUDE OIL, CONCENTRATIONS, BIOLOGICAL EFFECTS, WSF, METABOLISM, MORTALITY, REPRODUCTION, *CRANGON CRANGON
0497 " FUEL OIL, FISH, DEVELOPMENT , CONTAMINATION, BIOLOGICAL EFFECTS, HYDROCARBONS , REPRODUCTION, SUBLETHAL EFFECTS, *PSEUDOPLEURONECTES AMERICANUS
0498 " FUEL OIL, DEVELOPMENT , AROMATIC HYDROCARBONS, WSF, TOXICITY, MORTALITY, SUBLETHAL EFFECTS, RESPIRATION, METABOLISM, *RHITHROPANOPEUS HARISSI, *LIMULUS POLYPHEMUS
0517 " CRUDE OIL, BIOLOGICAL EFFECTS, ALGAE, WSF, METABOLISM, *NAPHTHALENES, *CHLAMYDOMONAS ANGULOSA
0522 " FISH, DEVELOPMENT , CRUDE OIL, CHRONIC EFFECTS, BIOLOGICAL EFFECTS, BEHAVIOR, UPTAKE, WSF, FISH, *PLATICHTHYS STELLATUS
0578 " BIODEGRADATION, BACTERIA, MICROORGANISMS, HYDROCARBONS , METABOLISM, OXIDATION, *CYCLOHEXANOL
0582 " BIODEGRADATION, BACTERIA, MICROORGANISMS, HYDROCARBONS , METABOLISM, *BUTADIENE
R030 " ECOSYSTEMS, CRUDE OIL, CONCENTRATIONS, CHRONIC EFFECTS, BIOLOGICAL EFFECTS, HYDROCARBONS , MARINE ORGANISMS, UPTAKE, RELEASE, SEDIMENTS, PACIFIC COAST
R037 " FISH, ENVIRONMENTAL EFFECTS, BIOLOGICAL EFFECTS, BEHAVIOR, MARINE ENVIRONMENT, REPRODUCTION, TOXICITY, MONITORING
0434 GUIDELINES, ENVIRONMENTAL PROTECTION, DISPERSANTS, CONTINGENCY PLANNING, SPILL CLEANUP
0453 " ENVIRONMENTAL EFFECTS, CONTINGENCY PLANNING, ARGO MERCHANT SPILL, SPILL RESPONSE, *SCIENTIFIC RESPONSE
0545 " BASELINE STUDIES, ANALYTICAL TECHNIQUES, MARINE ENVIRONMENT, POLLUTION CONTROL, SAMPLING, MARINE ORGANISMS
0664 " SAFETY, LEGISLATION, REGULATIONS, TANKERS, POLLUTION PREVENTION, US
0531 GULF OF ALASKA, FISHERIES, OFFSHORE DEVELOPMENT, OIL FIELDS, SOCIOECONOMIC EFFECTS, OCS, NORTH SEA

0643 GULF OF ALASKA, FISHERIES, ENVIRONMENTAL MANAGEMENT, ECOSYSTEMS, ECONOMIC EFFECTS, BIOLOGICAL EFFECTS, ALASKA , SOCIOECONOMIC EFFECTS, TANKERS, SAFETY, LIABILITY, OCS, OIL INDUSTRY, POLLUTION CONTROL
0454 GULF OF MEXICO, EQUIPMENT, CONTINGENCY PLANNING, SPILL COOPERATIVES, PERSONNEL TRAINING, SPILL CLEANUP, SPILL RESPONSE
0546 " ENVIRONMENTAL EFFECTS, EIS, DEVELOPMENT , ONSHORE IMPACTS, SOCIOECONOMIC EFFECTS, OCS, MISSISSIPPI
0562 " ESTUARIES, ENVIRONMENTAL EFFECTS, ECOSYSTEMS, CHRONIC EFFECTS, HEALTH HAZARDS
0610 " FATE, ANALYTICAL TECHNIQUES, PREDICTIONS, MOVEMENT, PHYSICAL EFFECTS, SAMPLING
0639 " ESTUARIES, ENVIRONMENTAL EFFECTS, DRILLING , COASTAL WATERS, OFFSHORE EXPLORATION, OFFSHORE PRODUCTION
0648 " ENVIRONMENTAL EFFECTS, OFFSHORE EXPLORATION, OFFSHORE PRODUCTION, OCS, REFINING, OIL TRANSPORT, PETROLEUM PRODUCTS, *CONFERENCE
0650 " ENVIRONMENTAL EFFECTS, SOCIOECONOMIC EFFECTS, OFFSHORE DEVELOPMENT, OCS, LOUISIANA
R031 " CORALS, CARCINOGENS, BIOLOGICAL EFFECTS, BEHAVIOR, OIL SHALE, METABOLISM, *DRILLING FLUIDS
R045 " ENVIRONMENTAL EFFECTS, ECOSYSTEMS, CONTAMINANTS, OIL FIELDS
R034 HABITATS, ENVIRONMENTAL EFFECTS, BIOLOGICAL EFFECTS, ANIMALS, MARINE MAMMALS, OIL SPILLS, MARINE ENVIRONMENT, *SEA OTTERS
0368 HARBORS, DISTRIBUTION, CONCENTRATIONS, HYDROCARBONS , SAMPLING, SEDIMENTS, OCS, NEW YORK
0402 " FRANCE, ESTUARIES, COASTS, BEACHES, AMOCO CADIZ SPILL, SPILL RESPONSE, SPILL CLEANUP, SPILL DISPOSAL, SHORELINES
0410 " EQUIPMENT, CALIFORNIA, SPILL CLEANUP, SPILL RESPONSE, TANKERS, SANSINENA SPILL
0424 " EQUIPMENT, CALIFORNIA, SPILL CLEANUP, SPILL RESPONSE, TANKERS, USCG, SANSINENA SPILL
0440 " EQUIPMENT, SPILL COOPERATIVES, SPILL RESPONSE, SPILL CLEANUP, OFFSHORE PRODUCTION
0619 " FUEL OIL, FATE, DISTRIBUTION, CHEMICAL EFFECTS, CALIFORNIA, BENTHOS, SEDIMENTS, SEDIMENTATION, INCINERATION, SANSINENA SPILL
0622 " FUEL OIL, FATE, CALIFORNIA, BIOLOGICAL EFFECTS, INCINERATION, WATER QUALITY, SANSINENA SPILL
0562 HEALTH HAZARDS, GULF OF MEXICO, ESTUARIES, ENVIRONMENTAL EFFECTS, ECOSYSTEMS, CHRONIC EFFECTS
0347 HYDROCARBONS , FISH, DISTRIBUTION, CHROMATOGRAPHY, CHEMICAL ANALYSIS, CALIFORNIA, BIOINDICATORS, BENTHOS, SEDIMENTS, NATURAL SEEPAGE, OCS, SANTA BARBARA CHANNEL
0355 " ANALYTICAL TECHNIQUES, REMOTE SENSING, MOVEMENT, MONITORING, SURVEILLANCE, SPILL TRAJECTORIES, SEA SURFACE
0358 " DISPERSION, DISPERSANTS, CHEMICAL ANALYSIS, SAMPLING
0360 " GEORGES BANK, GC/MS, CHEMICAL ANALYSIS, BIOGENIC HYDROCARBONS, BENTHOS, ARGO MERCHANT SPILL, PAH, WSF, SEA SURFACE, SEDIMENTS, MARINE ORGANISMS, ZOOPLANKTON, SOURCES, TANKERS
0362 " DISPERSANTS, CHEMICAL ANALYSIS, ANALYTICAL TECHNIQUES, SPECTROSCOPY, OIL SPILLS
0363 " DETECTION, CONCENTRATIONS, CHEMICAL ANALYSIS, PACIFIC OCEAN
0366 " EVAPORATION, DISPERSANTS, CHEMICAL ANALYSIS, SAMPLING, OIL SPILLS, *OIL SPILL VAPORS
0367 " DISTRIBUTION, DETECTION, CONCENTRATIONS, CHROMATOGRAPHY, CHEMICAL ANALYSIS, SAMPLING, NORTH SEA
0368 " HARBORS, DISTRIBUTION, CONCENTRATIONS, SAMPLING, SEDIMENTS, OCS, NEW YORK
0374 " CONCENTRATIONS, COASTAL WATERS, BERMUDA, SEDIMENTS, TROPICAL REGIONS, SAMPLING, MODELS
0379 " CHROMATOGRAPHY, CHEMICAL ANALYSIS, ANALYTICAL TECHNIQUES, SOURCE IDENTIFICATION, SAMPLING, SPECTROSCOPY, *IR, *UV, *FLUORESCENCE
0380 " FISH, FATE, CHROMATOGRAPHY, CHEMICAL ANALYSIS, ARGO MERCHANT SPILL, ANALYTICAL TECHNIQUES, SOURCE IDENTIFICATION, MASSACHUSETTS
0480 " AMPHIPODS, WSF, SEDIMENTS, UPTAKE, RELEASE, *NAPHTHALENES, *BIOMAGNIFICATION
0481 " CRUDE OIL, CHRONIC EFFECTS, BIODEGRADATION, BENTHOS, MARINE ORGANISMS, INVERTEBRATES, SEDIMENTS, UPTAKE
0483 " CHRONIC EFFECTS, AROMATIC HYDROCARBONS, SEDIMENTS, MARINE ORGANISMS, MARINE ENVIRONMENT, NORWAY
0487 " BIOLOGICAL EFFECTS, TOXICITY
0488 " GROWTH, CHRONIC EFFECTS, BIRDS, BIOLOGICAL EFFECTS, ACUTE EFFECTS, TOXICITY, REPRODUCTION
0490 " CRUDE OIL, CONTAMINATION, ABSORPTION, MARINE MAMMALS, METABOLISM, UPTAKE, RELEASE, *PHOCA HISPIDA
0493 " BIOLOGICAL EFFECTS, ALGAE, TOXICITY, SOLUBILITY, *CELL MEMBRANE
0497 " GROWTH, FUEL OIL, FISH, DEVELOPMENT , CONTAMINATION, BIOLOGICAL EFFECTS, REPRODUCTION, SUBLETHAL EFFECTS, *PSEUDOPLEURONECTES AMERICANUS
0499 " CRUSTACEANS, PAH, SUBLETHAL EFFECTS, RESPIRATION, TOXICITY, *PHENANTHRENE, *RHITHROPANOPEUS HARRISII
0500 " CRUDE OIL, CHRONIC EFFECTS, BIRDS, TOXICITY, UPTAKE
0501 " BACTERIA, ALGAE, MICROORGANISMS, PLANKTON
0504 " ECOSYSTEMS, CHEMICAL ANALYSIS, BIOINDICATORS, BENTHOS, AROMATIC HYDROCARBONS, MARSHES, INVERTEBRATES, OIL DISCHARGES, MONITORING, *BIOMAGNIFICATION
0506 " CRUSTACEANS, CRUDE OIL, BIOLOGICAL EFFECTS, SUBLETHAL EFFECTS, INVERTEBRATES, *HISTOLOGY, *PENAEUS AZTECUS

0510 HYDROCARBONS , CRUSTACEANS, ALASKA , TOXICITY, SUBLETHAL EFFECTS, MORTALITY, MARINE ORGANISMS
0512 " CONTAMINATION, CALIFORNIA, BENTHOS, BASELINE STUDIES, INVERTEBRATES, SAMPLING, OCS
0513 " ESTUARIES, DISTRIBUTION, BIOMASS, BIOLOGICAL EFFECTS, OIL SPILLS, ZOOPLANKTON
0525 " FISH, EKOFISK BLOWOUT, CONTAMINATION, BIOLOGICAL EFFECTS, BENTHOS, MOLLUSKS, SAMPLING, NORTH SEA
0578 " GROWTH, BIODEGRADATION, BACTERIA, MICROORGANISMS, METABOLISM, OXIDATION, *CYCLOHEXANOL
0579 " CRUDE OIL, BIODEGRADATION, BACTERIA, MICROORGANISMS, SPILL CLEANUP, *PLASMID TRANSFER, *GENETIC ENGINEERING, *PSEUDOMONAS
0581 " GROUNDWATER, EMULSIONS, CHEMICAL ANALYSIS, BIODEGRADATION, SOIL, MODELS, RESPIRATION
0582 " GROWTH, BIODEGRADATION, BACTERIA, MICROORGANISMS, METABOLISM, *BUTADIENE
0584 " GC/MS, ESTUARIES, ECOSYSTEMS, CHEMICAL ANALYSIS, OIL SPILLS, MOVEMENT, MICROORGANISMS
0591 " FUEL OIL, EVAPORATION, CHROMATOGRAPHY, CHEMICAL ANALYSIS, BUZZARDS BAY, BOUCHARD 65 SPILL, WEATHERING, SAMPLING, ICE, SHIPS
0593 " FATE, CHEMICAL ANALYSIS, BEACHES, SEDIMENTS, *ARROW SPILL
0604 " MODELS, SEDIMENTS, MOVEMENT, SUBARCTIC REGIONS
0616 " FUEL OIL, FATE, EVAPORATION, CHROMATOGRAPHY, BIODEGRADATION, SEDIMENTATION, SOLUTION, WEATHERING, MARINE ENVIRONMENT, ANALYTICAL TECHNQIUES
0617 " GC/MS, FATE, EKOFISK BLOWOUT, DISTRIBUTION, CHEMICAL ANALYSIS, SPREADING, NORTH SEA
0618 " GC/MS, EKOFISK BLOWOUT, CONTAMINATION, CHEMICAL ANALYSIS, BENTHOS, SEDIMENTS, NORTH SEA
0620 " FATE, PLANKTON, NORTH SEA, UK, *CHLOROPHYLL, *CARBON
0638 " OIL DISCHARGES, PLATFORMS, NORTH SEA, POLLUTION CONTROL
0668 " GRAVITY SEPARATION, FLOCCULATION, BALLAST , AROMATIC HYDROCARBONS, ANALYTICAL TECHNIQUES, ALASKA , OIL REMOVAL, WASTEWATER TREATMENT, MONITORING
R010 " DETECTION, BILGES, BACTERIA, WASTEWATERS, POLLUTION CONTROL, *ENZYME ELECTRODE
R014 " DETECTION, CONTAMINANTS, ANALYTICAL TECHNIQUES, SOURCE IDENTIFICATION
R019 " GC/MS, CHROMATOGRAPHY, ANALYTICAL TECHNIQUES, SEDIMENTS, MARINE ENVIRONMENT
R020 " CRUDE OIL, CHROMATOGRAPHY, ANALYTICAL TECHNIQUES, SOURCE IDENTIFICATION, SPECTROMETRY, *IR
R030 " GROWTH, ECOSYSTEMS, CRUDE OIL, CONCENTRATIONS, CHRONIC EFFECTS, BIOLOGICAL EFFECTS, MARINE ORGANISMS, UPTAKE, RELEASE, SEDIMENTS, PACIFIC COAST
R035 " CARCINOGENS, ALGAE, MICROORGANISMS, METABOLISM, *PROTOZOA, *MICROSOMES, *MUTAGENS
R036 " FOOD WEB, FISH, DISPERSANTS, CHEMICAL ANALYSIS, BIOLOGICAL EFFECTS, BASELINE STUDIES, ALASKA , SUBLETHAL EFFECTS, MARINE ORGANISMS, UPTAKE, METABOLISM, TOXICITY, *PATHOLOGY
R038 " FATE, ENVIRONMENTAL EFFECTS, ECOSYSTEMS, BIOLOGICAL EFFECTS, ANALYTICAL TECHNIQUES, MARINE ORGANISMS, TOXICITY, SUBARCTIC REGIONS, NOAA
R041 " FOOD WEB, BIOGENIC HYDROCARBONS, BASELINE STUDIES, ANTARCTICA, OFFSHORE PRODUCTION, *KRILL
R042 " ENVIRONMENTAL EFFECTS, DISTRIBUTION, CONCENTRATIONS, BENTHOS, BEAUFORT SEA, BASELINE STUDIES, ALASKA , OFFSHORE DEVELOPMENT, OFFSHORE PRODUCTION
R047 " DETECTION, CONCENTRATIONS, CARCINOGENS, BIOLOGICAL EFFECTS, ANALYTICAL TECHNIQUES, TOXICITY, SAMPLING
R053 " DECOMPOSITION, BIODEGRADATION, MARINE ENVIRONMENT, RECOVERY
R060 " FATE, DISTRIBUTION, CHEMICAL ANALYSIS, BUZZARDS BAY, BIOLOGICAL EFFECTS, ANALYTICAL TECHNIQUES, *NEW YORK BIGHT
R061 " ECOSYSTEMS, DRILLING , BIOASSAY, PETROCHEMICALS, TOXICITY, OFFSHORE PRODUCTION, *DRILLING MUDS
R062 " REFINERIES, WASTEWATERS, MONITORING, WATER QUALITY, POLLUTION CONTROL, *THERMAL OIL RECOVERY
0395 ICE, EQUIPMENT, SPILL CONTAINMENT, SPILL REMOVAL, RIVERS, SKIMMERS
0396 " DESIGN-ENGINEERING, BOOMS, SPILL CONTAINMENT, RIVERS, USCG, *CANADIAN COAST GUARD
0397 " DESIGN-ENGINEERING, SPILL CONTAINMENT, RIVERS, SPILL REMOVAL
0399 " EQUIPMENT, SPILL CLEANUP, SPILL CONTAINMENT, INLAND, RIVERS, SORBENTS, *LAND SPILLS
0401 " GREAT LAKES, FUEL OIL, OIL SPILLS, SPILL CLEANUP, INCINERATION, *IMPERIAL ST. CLAIR SPILL
0419 " FUEL OIL, EQUIPMENT, BUZZARDS BAY, BOUCHARD 65 SPILL, BOOMS, SPILL CLEANUP, SKIMMERS, INCINERATION
0431 " EQUIPMENT, SPILL RESPONSE, POLLUTION CONTROL, SHIPS, USCG, RIVERS, OIL REMOVAL, MISSISSIPPI RIVER
0433 " CONTINGENCY PLANNING, ALASKA , SPILL RESPONSE, PIPELINES, INLAND, TRANS-ALASKA PIPELINE, SPILL CONTAINMENT, SPILL CLEANUP, RESTORATION
0446 " CONTINGENCY PLANNING, ARCTIC, SPILL RESPONSE, MODELS, MOVEMENT, SPREADING
0449 " BEHAVIOR, ARCTIC, ALASKA , SPILL RESPONSE, SUBARCTIC REGIONS, SPILL CLEANUP,EQUIPMENT, USCG
0515 " FRESHWATER, ECOSYSTEMS, CRUDE OIL, BIOLOGICAL EFFECTS, BACTERIA, OIL SPILLS, PLANKTON
0573 " FUEL OIL, FLORIDA SPILL, FATE, BUZZARDS BAY, SEDIMENTS
0585 " FUEL OIL, BUZZARDS BAY, BOUCHARD 65 SPILL, MOVEMENT, OIL SPILLS, MODELS
0591 " HYDROCARBONS , FUEL OIL, EVAPORATION, CHROMATOGRAPHY, CHEMICAL ANALYSIS, BUZZARDS BAY, BOUCHARD 65 SPILL, WEATHERING, SAMPLING, SHIPS

0676 ICE, SHIPS, RIVERS, POLLUTION PREVENTION, *ACCIDENTS, *OHIO RIVER
R016 " DEVELOPMENT , DESIGN-ENGINEERING, BEHAVIOR, BEAUFORT SEA, BASELINE STUDIES, ALASKA , SPILL RESPONSE
R039 " FATE, COASTS, BEAUFORT SEA, BASELINE STUDIES, ARCTIC, OCS, SEDIMENTS, OIL SPILLS, PREDICTIONS
R049 " CRUDE OIL, BIOLOGICAL EFFECTS, BIODEGRADATION, ARCTIC, ALASKA , MICROORGANISMS
R055 " FATE, ARCTIC, OIL SPILLS, MOVEMENT, PREDICTIONS, *POOLING
R059 " BEAUFORT SEA, MODELS, MOVEMENT, SPILL TRAJECTORIES, REMOTE SENSING, OFFSHORE DEVELOPMENT, RISK ANALYSIS, *RADAR
R065 ILLINOIS, CONTAMINANTS, REFINING, WASTEWATER TREATMENT, POLLUTION CONTROL, *INDIANA
0432 IMCO, FOREIGN GOVERNMENTS, CONTINGENCY PLANNING, INTERNATIONAL AGREEMENTS, POLLUTION CONTROL, LAW ENFORCEMENT, MEDITERRANEAN SEA, *ROCC, *UNEP
0465 " FATE, BIOLOGICAL EFFECTS, INTERNATIONAL CONVENTIONS, REGULATIONS, OIL TRANSPORT, TANKERS, SOURCES, *LONDON DUMPING CONVENTION
0401 INCINERATION, ICE, GREAT LAKES, FUEL OIL, OIL SPILLS, SPILL CLEANUP, *IMPERIAL ST. CLAIR SPILL
0419 " ICE, FUEL OIL, EQUIPMENT, BUZZARDS BAY, BOUCHARD 65 SPILL, BOOMS, SPILL CLEANUP, SKIMMERS
0619 " HARBORS, FUEL OIL, FATE, DISTRIBUTION, CHEMICAL EFFECTS, CALIFORNIA, BENTHOS, SEDIMENTS, SEDIMENTATION, SANSINENA SPILL
0622 " HARBORS, FUEL OIL, FATE, CALIFORNIA, BIOLOGICAL EFFECTS, WATER QUALITY, SANSINENA SPILL
0372 INDUSTRIES, CHEMICAL ANALYSIS, SPECTROSCOPY, WASTEWATERS
0447 " CONTINGENCY PLANNING, CANADA, BEAUFORT SEA, SPILL CLEANUP, SPILL RESPONSE, POLLUTION CONTROL
0473 " GOVERNMENT AGENCIES, ESTUARIES, ENVIRONMENTAL PROTECTION, DISPOSAL , DEVELOPMENT , POLLUTION CONTROL, PORTS , WASTEWATERS, REGULATIONS, US
0474 " ECONOMICS, POLLUTION CONTROL, LEGISLATION, REGULATIONS, WASTWATER TREATMENT, *MANAGEMENT , *HANDBOOK
0554 " ECONOMIC EFFECTS, COMPENSATION, OIL SPILLS, LIABILITY, POLLUTION CONTROL
0628 " ECONOMICS, COST ANALYSIS, LEGISLATION, POLLUTION CONTROL, OIL DISCHARGES, WASTEWATERS
0633 " GOVERNMENT AGENCIES, ESTUARIES, ENVIRONMENTAL EFFECTS, COASTAL ZONE MANAGEMENT, OIL TRANSFER, REFINERIES, PETROCHEMICALS
0641 " ESTUARIES, DEVELOPMENT , COASTAL WATERS, ALASKA , POLLUTION CONTOL, PRODUCTION , OIL TRANSPORT, PIPELINES, TANKERS
0657 " GOVERNMENT AGENCIES, CONTINGENCY PLANNING, ALASKA , PORTS , OIL TERMINALS, OIL TRANSPORT, SPILL RESPONSE, SPILL CLEANUP, USCG, *PORT VALDEZ
0411 INFORMATION SYSTEMS, EQUIPMENT, SPILL CLEANUP, SPILL RESPONSE, USCG
0437 " CANADA, SPILL RESPONSE, *MANITOBA, *ENVIRONMENTAL ACCIDENT PROGRAM, *SPILL REPORTING
R028 " FATE, CHEMICAL EFFECTS, CHEMICAL ANALYSIS, BIOLOGICAL EFFECTS, BEHAVIOR, SPILL RESPONSE, SPILL TRAJECTORIES, PHYSICAL EFFECTS, *SCIENTIFIC RESPONSE
R046 " ENVIRONMENTAL EFFECTS, CONTINGENCY PLANNING, ANALYTICAL TECHNIQUES, OIL SPILLS, SPILL RESPONSE
R069 " RESOURCE MANAGEMENT, STATISTICAL ANALYSIS, PUGET SOUND, WASHINGTON, NEW YORK, *MESA
0399 INLAND, ICE, EQUIPMENT, SPILL CLEANUP, SPILL CONTAINMENT, RIVERS, SORBENTS, *LAND SPILLS
0433 " ICE, CONTINGENCY PLANNING, ALASKA , SPILL RESPONSE, PIPELINES, TRANS-ALASKA PIPELINE, SPILL CONTAINMENT, SPILL CLEANUP, RESTORATION
0659 " EPA, CONTINGENCY PLANNING, COASTS, STORAGE, OIL TANKS, POLLUTION PREVENTION, USN, REGULATIONS
0558 INSURANCE, LEGISLATION, LIABILITY, US GOVERNMENT, INTERNATIONAL AGREEMENTS, REGULATIONS
0432 INTERNATIONAL AGREEMENTS, IMCO, FOREIGN GOVERNMENTS, CONTINGENCY PLANNING, POLLUTION CONTROL, LAW ENFORCEMENT, MEDITERRANEAN SEA, *ROCC, *UNEP
0457 " LEGISLATION, POLLUTION PREVENTION, OCEANS
0461 " ECONOMIC EFFECTS, LEGISLATION, US, LIABILITY, TRANS-ALASKA PIPELINE, TANKERS, REGULATIONS
0558 " INSURANCE, LEGISLATION, LIABILITY, US GOVERNMENT, REGULATIONS
0465 INTERNATIONAL CONVENTIONS, IMCO, FATE, BIOLOGICAL EFFECTS, REGULATIONS, OIL TRANSPORT, TANKERS, SOURCES, *LONDON DUMPING CONVENTION
0466 " FOREIGN GOVERNMENTS, RESOURCE MANAGEMENT, LEGISLATION, REGULATIONS, *LAW OF THE SEA
0425 INTERTIDAL ZONE, EQUIPMENT, ENVIRONMENTAL EFFECTS, ECONOMICS, DISPERSANTS, BEACHES, SPILL CLEANUP, SHORELINES
0482 " FUEL OIL, CHESAPEAKE BAY, BIOLOGICAL EFFECTS, BENTHOS, INVERTEBRATES, SHIPS, *BARGE STC-101 SPILL
0511 " FUEL OIL, FISH, CRUDE OIL, BENTHOS, ALASKA , WSF, TOXICITY, MARINE ORGANISMS, INVERTEBRATES, *PELAGIC ZONE
0520 " DISTRIBUTION, COASTS, BIOLOGICAL EFFECTS, METULA SPILL, INVERTEBRATES, SPAIN
0521 " DETECTION, CHILE, BIOLOGICAL EFFECTS, OIL SPILLS, RECOVERY, MORTALITY, INVERTEBRATES, METULA SPILL, STRAIT OF MAGELLAN
0523 " BIOLOGICAL EFFECTS, BIOASSAY, MARINE ORGANISMS, MOLLUSKS, POLYCHAETES, UPTAKE
0540 " ENVIRONMENTAL EFFECTS, CHROMATOGRAPHY, BIOLOGICAL EFFECTS, BIODEGRADATION, MONITORING, ONSHORE IMPACTS, SEDIMENTS, RESTORATION, TROPICAL REGIONS, RECOVERY, PUERTO RICO

0568 INTERTIDAL ZONE, ENVIRONMENTAL EFFECTS, CHILE, BIOLOGICAL EFFECTS, OIL SPILLS, RECOVERY, ONSHORE IMPACTS, SPILL CLEANUP, METULA SPILL, STRAIT OF MAGELLAN
0623 " FATE, DISTRIBUTION, CALIFORNIA, BIOLOGICAL EFFECTS, BEACHES, TAR, NATURAL SEEPAGE, SEDIMENTS, MARINE ORGANISMS, SANTA BARBARA CHANNEL
0343 INVERTEBRATES, BENTHOS, MONITORING, OFFSHORE DEVELOPMENT, OIL FIELDS, NORTH SEA
0481 " HYDROCARBONS , CRUDE OIL, CHRONIC EFFECTS, BIODEGRADATION, BENTHOS, MARINE ORGANISMS, SEDIMENTS, UPTAKE
0482 " INTERTIDAL ZONE, FUEL OIL, CHESAPEAKE BAY, BIOLOGICAL EFFECTS, BENTHOS, SHIPS, *BARGE STC-101 SPILL
0485 " CRUDE OIL, BENTHOS, ARCTIC, AMPHIPODS, ACUTE EFFECTS, TOXICITY, SUBLETHAL EFFECTS, MORTALITY, SEDIMENTS
0496 " ENVIRONMENTAL EFFECTS, MOLLUSKS, METABOLISM, *CAROTENOIDS
0504 " HYDROCARBONS , ECOSYSTEMS, CHEMICAL ANALYSIS, BIOINDICATORS, BENTHOS, AROMATIC HYDROCARBONS, MARSHES, OIL DISCHARGES, MONITORING, *BIOMAGNIFICATION
0505 " ESTUARIES, DISTRIBUTION, DEVELOPMENT , COASTAL WATERS, BIOLOGICAL EFFECTS, BENTHOS
0506 " HYDROCARBONS , CRUSTACEANS, CRUDE OIL, BIOLOGICAL EFFECTS, SUBLETHAL EFFECTS, *HISTOLOGY, *PENAEUS AZTECUS
0511 " INTERTIDAL ZONE, FUEL OIL, FISH, CRUDE OIL, BENTHOS, ALASKA , WSF, TOXICITY, MARINE ORGANISMS, *PELAGIC ZONE
0512 " HYDROCARBONS , CONTAMINATION, CALIFORNIA, BENTHOS, BASELINE STUDIES, SAMPLING, OCS
0519 " CRUDE OIL, COASTS, BIOLOGICAL EFFECTS, BENTHOS, MOLLUSKS, MORTALITY, URQUIOLA SPILL, SPAIN
0520 " INTERTIDAL ZONE, DISTRIBUTION, COASTS, BIOLOGICAL EFFECTS, METULA SPILL, SPAIN
0521 " INTERTIDAL ZONE, DETECTION, CHILE, BIOLOGICAL EFFECTS, OIL SPILLS, RECOVERY, MORTALITY, METULA SPILL, STRAIT OF MAGELLAN
0369 JAPAN, CONTAMINANTS, CHEMICAL ANALYSIS, BAYS, WATER QUALITY, SOURCES
0467 " GOVERNMENT AGENCIES, FOREIGN GOVERNMENTS, EQUIPMENT, CONTINGENCY PLANNING, POLLUTION CONTROL, SPILL CLEANUP, LEGISLATION, REGULATIONS
0533 " FISHERIES, ENVIRONMENTAL EFFECTS, ECONOMIC EFFECTS, POLLUTION CONTROL, LEGISLATION, REGULATIONS
0537 " FUEL OIL, FISHERIES, LEAKAGE, OIL SPILLS, RECOVERY, RESTORATION, WATER QUALITY
0547 KUWAIT, ENVIRONMENTAL PROTECTION, ENVIRONMENTAL MANAGEMENT, DEVELOPMENT , BASELINE STUDIES, OIL INDUSTRY, RISK ANALYSIS, PERSIAN GULF, *UNEP
0671 LAND FARMING, DISPOSAL , BIODEGRADATION, WASTE OIL, SLUDGE
0357 LAW ENFORCEMENT, EQUIPMENT, REMOTE SENSING, MONITORING, SURVEILLANCE, USCG, POLLUTION CONTROL, TANKERS, SHIPS, *AIREYE SYSTEM
0432 " INTERNATIONAL AGREEMENTS, IMCO, FOREIGN GOVERNMENTS, CONTINGENCY PLANNING, POLLUTION CONTROL, MEDITERRANEAN SEA, *ROCC, *UNEP
0475 " GOVERNMENT AGENCIES, FOREIGN GOVERNMENTS, EQUIPMENT, CONTINGENCY PLANNING, BLACK SEA, REGULATIONS, LEGISLATION, SPILL CLEANUP, USSR
0630 " EPA, CONTINGENCY PLANNING, OIL INDUSTRY, POLLUTION PREVENTION, PRODUCTION , REGULATIONS, *STRIPPER WELLS
0662 " TANKERS, SHIPS, REGULATIONS, SAFETY, PORTS , USCG, STATISTICS
0665 " ALASKA , USCG, TANKERS, SAFETY, US GOVERNMENT, REGULATIONS, *VESSEL TRAFFIC SERVICE
0393 LEAKAGE, SPILL CONTAINMENT, SHIPS, PATENT, POLLUTION CONTROL, *CRYOTHERMAL METHOD
0423 " GROUNDWATER, FUEL OIL, SPILL CONTAINMENT, SPILL CLEANUP, SPILL REMOVAL, OILDISCHARGES, PENNSYLVANIA, STORAGE
0537 " JAPAN, FUEL OIL, FISHERIES, OIL SPILLS, RECOVERY, RESTORATION, WATER QUALITY
0457 LEGISLATION, INTERNATIONAL AGREEMENTS, POLLUTION PREVENTION, OCEANS
0458 " ECONOMIC EFFECTS, COST ANALYSIS, COMPENSATION, ALASKA , REGULATIONS, OIL SPILLS, US
0459 " ECONOMIC EFFECTS, COST ANALYSIS, COMPENSATION, OIL SPILLS, LIABILITY
0461 " INTERNATIONAL AGREEMENTS, ECONOMIC EFFECTS, US, LIABILITY, TRANS-ALASKA PIPELINE, TANKERS, REGULATIONS
0462 " COST ANALYSIS, SPILL CLEANUP, LIABILITY, US GOVERNMENT
0463 " ENVIRONMENTAL MANAGEMENT, COMPENSATION, OIL SPILLS, POLLUTION CONTROL, UK
0464 " ENVIRONMENTAL MANAGEMENT, ALASKA , OCS, REGULATIONS
0466 " INTERNATIONAL CONVENTIONS, FOREIGN GOVERNMENTS, RESOURCE MANAGEMENT, REGULATIONS, *LAW OF THE SEA
0467 " JAPAN, GOVERNMENT AGENCIES, FOREIGN GOVERNMENTS, EQUIPMENT, CONTINGENCY PLANNING, POLLUTION CONTROL, SPILL CLEANUP, REGULATIONS
0474 " INDUSTRIES, ECONOMICS, POLLUTION CONTROL, REGULATIONS, WASTWATER TREATMENT, *MANAGEMENT , *HANDBOOK
0475 " LAW ENFORCEMENT, GOVERNMENT AGENCIES, FOREIGN GOVERNMENTS, EQUIPMENT, CONTINGENCY PLANNING, BLACK SEA, REGULATIONS, SPILL CLEANUP, USSR
0533 " JAPAN, FISHERIES, ENVIRONMENTAL EFFECTS, ECONOMIC EFFECTS, POLLUTION CONTROL, REGULATIONS
0551 " COMPENSATION, LIABILITY, OIL SPILLS, US GOVERNMENT, SPILL CLEANUP
0552 " COMPENSATION, LIABILITY, OIL SPILLS, *SUPERFUND
0555 " ENVIRONMENTAL MANAGEMENT, COMPENSATION, OIL SPILLS, *DAMAGE ASSESSMENT
0556 " FISHERIES, COMPENSATION, ALASKA , LIABILITY, US GOVERNMENT
0557 " CONTINGENCY PLANNING, METULA SPILL, PERSONNEL TRAINING, TEXAS
0558 " INTERNATIONAL AGREEMENTS, INSURANCE, LIABILITY, US GOVERNMENT, REGULATIONS
0559 " ALASKA , LIABILITY, US GOVERNMENT, STATE GOVERNMENTS, MARINE ENVIRONMENT
0561 " EKOFISK BLOWOUT, ECOSYSTEMS, BIOLOGICAL EFFECTS, ARGO MERCHANT SPILL, OIL SPILLS, TANKERS, MARINE ORGANISMS, WILDLIFE, SHIPS, SOCIOECONOMIC EFFECTS, MICROORGANISMS, TOXICITY

0627 LEGISLATION, ECONOMIC EFFECTS, COMPENSATION, LIABILITY, OCS, SPILL CLEANUP
0628 " INDUSTRIES, ECONOMICS, COST ANALYSIS, POLLUTION CONTROL, OIL DISCHARGES, WASTEWATERS
0631 " ECONOMIC EFFECTS, COMPENSATION, LIABILITY, SPILL COOPERATIVES, SPILL CLEANUP, *SUPERFUND
0655 " GOVERNMENT AGENCIES, ENVIRONMENTAL PROTECTION, PIPELINES, OIL SPILLS, SAFETY, POLLUTION PREVENTION, REGULATIONS
0660 " ECONOMIC EFFECTS, COMPENSATION, LIABILITY, SPILL COOPERATIVES, SPILL CLEANUP
0661 " ENVIRONMENTAL PROTECTION, ALASKA , SAFETY, POLLUTION PREVENTION, TANKERS
0663 " COMPENSATION, SAFETY, US, TANKERS, POLLUTION PREVENTION, REGULATIONS
0664 " GUIDELINES, SAFETY, REGULATIONS, TANKERS, POLLUTION PREVENTION, US
0377 LIABILITY, COMPENSATION, CHEMICAL ANALYSIS, SOURCE IDENTIFICATION, USCG, OIL SPILLS
0450 " GOVERNMENT AGENCIES, CONTINGENCY PLANNING, SPILL RESPONSE, SPILL CLEANUP, TANKERS, USCG, MASSACHUSETTS, *GLOBAL HOPE SPILL
0459 " LEGISLATION, ECONOMIC EFFECTS, COST ANALYSIS, COMPENSATION, OIL SPILLS
0460 " ECONOMIC EFFECTS, COST ANALYSIS, COMPENSATION, OIL SPILLS, *LITIGATION
0461 " LEGISLATION, INTERNATIONAL AGREEMENTS, ECONOMIC EFFECTS, US, TRANS-ALASKA PIPELINE, TANKERS, REGULATIONS
0462 " LEGISLATION, COST ANALYSIS, SPILL CLEANUP, US GOVERNMENT
0551 " LEGISLATION, COMPENSATION, OIL SPILLS, US GOVERNMENT, SPILL CLEANUP
0552 " LEGISLATION, COMPENSATION, OIL SPILLS, *SUPERFUND
0553 " ECONOMIC EFFECTS, COST ANALYSIS, COMPENSATION, OIL SPILLS
0554 " INDUSTRIES, ECONOMIC EFFECTS, COMPENSATION, OIL SPILLS, POLLUTION CONTROL
0556 " LEGISLATION, FISHERIES, COMPENSATION, ALASKA , US GOVERNMENT
0558 " LEGISLATION, INTERNATIONAL AGREEMENTS, INSURANCE, US GOVERNMENT, REGULATIONS
0559 " LEGISLATION, ALASKA , US GOVERNMENT, STATE GOVERNMENTS, MARINE ENVIRONMENT
0627 " LEGISLATION, ECONOMIC EFFECTS, COMPENSATION, OCS, SPILL CLEANUP
0631 " LEGISLATION, ECONOMIC EFFECTS, COMPENSATION, SPILL COOPERATIVES, SPILL CLEANUP, *SUPERFUND
0643 " GULF OF ALASKA, FISHERIES, ENVIRONMENTAL MANAGEMENT, ECOSYSTEMS, ECONOMIC EFFECTS, BIOLOGICAL EFFECTS, ALASKA , SOCIOECONOMIC EFFECTS, TANKERS, SAFETY, OCS, OIL INDUSTRY, POLLUTION CONTROL
0660 " LEGISLATION, ECONOMIC EFFECTS, COMPENSATION, SPILL COOPERATIVES, SPILL CLEANUP
0456 LOUISIANA, EQUIPMENT, CONTINGENCY PLANNING, BOOMS, SPILL RESPONSE, SPILL CLEANUP, STRATEGIC PETROLEUM RESERVE, SKIMMERS, STORAGE
0635 " ENVIRONMENTAL EFFECTS, COASTAL ZONE MANAGEMENT, OCS, OFFSHORE DEVELOPMENT, OIL-GAS LEASING, ONSHORE IMPACTS, SOCIOECONOMIC EFFECTS
0650 " GULF OF MEXICO, ENVIRONMENTAL EFFECTS, SOCIOECONOMIC EFFECTS, OFFSHORE DEVELOPMENT, OCS
R026 MANUALS, PERSONNEL TRAINING, SPILL RESPONSE, SPILL CLEANUP
0478 MARINE ENVIRONMENT, AUSTRALIA, POLLUTION PREVENTION, POLLUTION CONTROL
0483 " HYDROCARBONS , CHRONIC EFFECTS, AROMATIC HYDROCARBONS, SEDIMENTS, MARINE ORGANISMS, NORWAY
0509 " FOOD WEB, CARCINOGENS, BIOLOGICAL EFFECTS, AROMATIC HYDROCARBONS, SOURCES, MARINE ORGANISMS, *AHH
0544 " ENVIRONMENTAL EFFECTS, DEVELOPMENT , BASELINE STUDIES, ALASKA , OIL-GAS LEASING
0545 " GUIDELINES, BASELINE STUDIES, ANALYTICAL TECHNIQUES, POLLUTION CONTROL, SAMPLING, MARINE ORGANISMS
0559 " LIABILITY, LEGISLATION, ALASKA , US GOVERNMENT, STATE GOVERNMENTS
0565 " ENVIRONMENTAL EFFECTS, SOURCES, MEDITERRANEAN SEA
0616 " HYDROCARBONS , FUEL OIL, FATE, EVAPORATION, CHROMATOGRAPHY, BIODEGRADATION, SEDIMENTATION, SOLUTION, WEATHERING, ANALYTICAL TECHNQIUES
R012 " BIOLOGICAL EFFECTS, BIOINDICATORS, BACTERIA, MICROORGANISMS, SUBLETHAL EFFECTS, *CHEMOTAXIS
R019 " HYDROCARBONS , GC/MS, CHROMATOGRAPHY, ANALYTICAL TECHNIQUES, SEDIMENTS
R034 " HABITATS, ENVIRONMENTAL EFFECTS, BIOLOGICAL EFFECTS, ANIMALS, MARINE MAMMALS, OIL SPILLS, *SEA OTTERS
R037 " GROWTH, FISH, ENVIRONMENTAL EFFECTS, BIOLOGICAL EFFECTS, BEHAVIOR, REPRODUCTION, TOXICITY, MONITORING
R048 " FOOD WEB, ENVIRONMENTAL EFFECTS, BIOLOGICAL EFFECTS, SOURCE IDENTIFICATION
R052 " ESTUARIES, CRUDE OIL, BIODEGRADATION, BACTERIA, MICROORGANISMS, SEDIMENTS
R053 " HYDROCARBONS , DECOMPOSITION, BIODEGRADATION, RECOVERY
0426 MARINE MAMMALS, ENVIRONMENTAL EFFECTS, BEACHES, SPILL CLEANUP, SPILL RESPONSE, RESTORATION, MARSHES
0490 " HYDROCARBONS , CRUDE OIL, CONTAMINATION, ABSORPTION, METABOLISM, UPTAKE, RELEASE, *PHOCA HISPIDA
0492 " BIOLOGICAL EFFECTS, ARCTIC, SUBARCTIC REGIONS, TOXICITY, METABOLISM
0507 " ENVIRONMENTAL EFFECTS, CONTAMINATION, BIRDS, BASELINE STUDIES, ARGO MERCHANT SPILL, MASSACHUSETTS
0576 " FISH, FATE, ENVIRONMENTAL EFFECTS, CONTINGENCY PLANNING, BIRDS, BIOLOGICAL EFFECTS, BEAUFORT SEA, OIL SPILLS, SPILL RESPONSE, MOVEMENT, TOXICITY, PLANKTON, *SCIENTIFIC RESPONSE
R034 " MARINE ENVIRONMENT, HABITATS, ENVIRONMENTAL EFFECTS, BIOLOGICAL EFFECTS, ANIMALS, OIL SPILLS, *SEA OTTERS

0344 MARINE ORGANISMS, ENVIRONMENTAL EFFECTS, ECOSYSTEMS, DEVELOPMENT , BASELINE STUDIES, ALGAE, ALASKA , MONITORING
0360 " HYDROCARBONS , GEORGES BANK, GC/MS, CHEMICAL ANALYSIS, BIOGENIC HYDROCARBONS, BENTHOS, ARGO MERCHANT SPILL, PAH, WSF, SEA SURFACE, SEDIMENTS, ZOOPLANKTON, SOURCES, TANKERS
0370 " GC/MS, CHEMICAL ANALYSIS, AROMATIC HYDROCARBONS, AMOCO CADIZ SPILL, SAMPLING, PAH, OXIDATION, UPTAKE, SEDIMENTS, *MOUSSE
0481 " INVERTEBRATES, HYDROCARBONS , CRUDE OIL, CHRONIC EFFECTS, BIODEGRADATION, BENTHOS, SEDIMENTS, UPTAKE
0483 " MARINE ENVIRONMENT, HYDROCARBONS , CHRONIC EFFECTS, AROMATIC HYDROCARBONS, SEDIMENTS, NORWAY
0502 " BLACK SEA, BIOLOGICAL EFFECTS, PETROLEUM PRODUCTS
0503 " CRUDE OIL, CONTAMINATION, CHRONIC EFFECTS, BIOLOGICAL EFFECTS, BIOASSAY, API, *RESEARCH OVERVIEW
0509 " MARINE ENVIRONMENT, FOOD WEB, CARCINOGENS, BIOLOGICAL EFFECTS, AROMATIC HYDROCARBONS, SOURCES, *AHH
0510 " HYDROCARBONS , CRUSTACEANS, ALASKA , TOXICITY, SUBLETHAL EFFECTS, MORTALITY
0511 " INVERTEBRATES, INTERTIDAL ZONE, FUEL OIL, FISH, CRUDE OIL, BENTHOS, ALASKA , WSF, TOXICITY, *PELAGIC ZONE
0516 " ALASKA , SUBLETHAL EFFECTS, MOLLUSKS, *MACOMA BALTHICA
0518 " CRUDE OIL, BIOLOGICAL EFFECTS, BENTHOS, NATURAL SEEPAGE, SEDIMENTS, SANTA BARBARA CHANNEL
0523 " INTERTIDAL ZONE, BIOLOGICAL EFFECTS, BIOASSAY, MOLLUSKS, POLYCHAETES, UPTAKE
0538 " FISH, ENVIRONMENTAL EFFECTS, BENTHOS, ARGO MERCHANT SPILL, ZOOPLANKTON, TANKERS, MASSACHUSETTS
0541 " ENVIRONMENTAL EFFECTS, DISPERSANTS, BIOLOGICAL EFFECTS, AMOCO CADIZ SPILL, OIL SPILLS, RECOVERY, SPILL CLEANUP
0545 " MARINE ENVIRONMENT, GUIDELINES, BASELINE STUDIES, ANALYTICAL TECHNIQUES, POLLUTION CONTROL, SAMPLING
0561 " LEGISLATION, EKOFISK BLOWOUT, ECOSYSTEMS, BIOLOGICAL EFFECTS, ARGO MERCHANT SPILL, OIL SPILLS, TANKERS, WILDLIFE, SHIPS, SOCIOECONOMIC EFFECTS, MICROORGANISMS, TOXICITY
0623 " INTERTIDAL ZONE, FATE, DISTRIBUTION, CALIFORNIA, BIOLOGICAL EFFECTS, BEACHES, TAR, NATURAL SEEPAGE, SEDIMENTS, SANTA BARBARA CHANNEL
R030 " HYDROCARBONS , GROWTH, ECOSYSTEMS, CRUDE OIL, CONCENTRATIONS, CHRONIC EFFECTS, BIOLOGICAL EFFECTS, UPTAKE, RELEASE, SEDIMENTS, PACIFIC COAST
R036 " HYDROCARBONS , FOOD WEB, FISH, DISPERSANTS, CHEMICAL ANALYSIS, BIOLOGICAL EFFECTS, BASELINE STUDIES, ALASKA , SUBLETHAL EFFECTS, UPTAKE, METABOLISM, TOXICITY, *PATHOLOGY
R038 " HYDROCARBONS , FATE, ENVIRONMENTAL EFFECTS, ECOSYSTEMS, BIOLOGICAL EFFECTS, ANALYTICAL TECHNIQUES, TOXICITY, SUBARCTIC REGIONS, NOAA
0426 MARSHES, MARINE MAMMALS, ENVIRONMENTAL EFFECTS, BEACHES, SPILL CLEANUP, SPILL RESPONSE, RESTORATION
0504 " INVERTEBRATES, HYDROCARBONS , ECOSYSTEMS, CHEMICAL ANALYSIS, BIOINDICATORS, BENTHOS, AROMATIC HYDROCARBONS, OIL DISCHARGES, MONITORING, *BIOMAGNIFICATION
0560 " FISH, ENVIRONMENTAL EFFECTS, BAYS, WILDLIFE, SPILL CLEANUP, SHIPS, ST. LAWRENCE RIVER, *NEPCO 140 SPILL
0567 " ENVIRONMENTAL EFFECTS, CHILE, BEACHES, OIL SPILLS, METULA SPILL, STRAIT OF MAGELLAN, TANKERS
0570 " BIOLOGICAL EFFECTS, BENTHOS, PIPELINES, OIL SPILLS, PLANTS, MONITORING, SPILL CLEANUP, TEXAS
0575 " ESTUARIES, ENVIRONMENTAL EFFECTS, ECOSYSTEMS, CHRONIC EFFECTS, SUBLETHAL EFFECTS, PETROLEUM PRODUCTS, PHYSICAL EFFECTS
0380 MASSACHUSETTS, HYDROCARBONS , FISH, FATE, CHROMATOGRAPHY, CHEMICAL ANALYSIS, ARGO MERCHANT SPILL, ANALYTICAL TECHNIQUES, SOURCE IDENTIFICATION
0450 " LIABILITY, GOVERNMENT AGENCIES, CONTINGENCY PLANNING, SPILL RESPONSE, SPILL CLEANUP, TANKERS, USCG, *GLOBAL HOPE SPILL
0507 " MARINE MAMMALS, ENVIRONMENTAL EFFECTS, CONTAMINATION, BIRDS, BASELINE STUDIES, ARGO MERCHANT SPILL
0538 " MARINE ORGANISMS, FISH, ENVIRONMENTAL EFFECTS, BENTHOS, ARGO MERCHANT SPILL, ZOOPLANKTON, TANKERS
0432 MEDITERRANEAN SEA, LAW ENFORCEMENT, INTERNATIONAL AGREEMENTS, IMCO, FOREIGN GOVERNMENTS, CONTINGENCY PLANNING, POLLUTION CONTROL, *ROCC, *UNEP
0565 " MARINE ENVIRONMENT, ENVIRONMENTAL EFFECTS, SOURCES
0489 METABOLISM, GROWTH, CRUSTACEANS, CRUDE OIL, CONCENTRATIONS, BIOLOGICAL EFFECTS, WSF, MORTALITY, REPRODUCTION, *CRANGON CRANGON
0490 " MARINE MAMMALS, HYDROCARBONS , CRUDE OIL, CONTAMINATION, ABSORPTION, UPTAKE, RELEASE, *PHOCA HISPIDA
0491 " FRESHWATER, BIOLOGICAL EFFECTS, BIBLIOGRAPHIES, ANIMALS, OIL SPILLS, MICROORGANISMS, PLANTS, SEAWATER
0492 " MARINE MAMMALS, BIOLOGICAL EFFECTS, ARCTIC, SUBARCTIC REGIONS, TOXICITY
0496 " INVERTEBRATES, ENVIRONMENTAL EFFECTS, MOLLUSKS, *CAROTENOIDS
0498 " GROWTH, FUEL OIL, DEVELOPMENT , AROMATIC HYDROCARBONS, WSF, TOXICITY, MORTALITY, SUBLETHAL EFFECTS, RESPIRATION, *RHITHROPANOPEUS HARISSI, *LIMULUS POLYPHEMUS

0517 METABOLISM, GROWTH, CRUDE OIL, BIOLOGICAL EFFECTS, ALGAE, WSF, *NAPHTHALENES, *CHLAMYDOMONAS ANGULOSA
0578 " HYDROCARBONS , GROWTH, BIODEGRADATION, BACTERIA, MICROORGANISMS, OXIDATION, *CYCLOHEXANOL
0582 " HYDROCARBONS , GROWTH, BIODEGRADATION, BACTERIA, MICROORGANISMS, *BUTADIENE
R031 " GULF OF MEXICO, CORALS, CARCINOGENS, BIOLOGICAL EFFECTS, BEHAVIOR, OIL SHALE, *DRILLING FLUIDS
R035 " HYDROCARBONS , CARCINOGENS, ALGAE, MICROORGANISMS, *PROTOZOA, *MICROSOMES, *MUTAGENS
R036 " MARINE ORGANISMS, HYDROCARBONS , FOOD WEB, FISH, DISPERSANTS, CHEMICAL ANALYSIS, BIOLOGICAL EFFECTS, BASELINE STUDIES, ALASKA , SUBLETHAL EFFECTS, UPTAKE, TOXICITY, *PATHOLOGY
0376 METULA SPILL, GC/MS, CONCENTRATIONS, CHILE, CHEMICAL ANALYSIS, BIOLOGICAL EFFECTS, OIL SPILLS, SAMPLING, SEDIMENTS, WEATHERING, ONSHORE IMPACTS, STRAIT OF MAGELLAN
0520 " INVERTEBRATES, INTERTIDAL ZONE, DISTRIBUTION, COASTS, BIOLOGICAL EFFECTS, SPAIN
0521 " INVERTEBRATES, INTERTIDAL ZONE, DETECTION, CHILE, BIOLOGICAL EFFECTS, OIL SPILLS, RECOVERY, MORTALITY, STRAIT OF MAGELLAN
0535 " FATE, BEHAVIOR, RECOVERY, SPILL CLEANUP, PHYSICAL EFFECTS, MOVEMENT, OIL SPILLS, STRAIT OF MAGELLAN
0536 " FATE, ENVIRONMENTAL EFFECTS, COASTAL WATERS, OIL SPILLS, URQUIOLA SPILL, *VULNERABILITY INDEX
0557 " LEGISLATION, CONTINGENCY PLANNING, PERSONNEL TRAINING, TEXAS
0567 " MARSHES, ENVIRONMENTAL EFFECTS, CHILE, BEACHES, OIL SPILLS, STRAIT OF MAGELLAN, TANKERS
0568 " INTERTIDAL ZONE, ENVIRONMENTAL EFFECTS, CHILE, BIOLOGICAL EFFECTS, OIL SPILLS, RECOVERY, ONSHORE IMPACTS, SPILL CLEANUP, STRAIT OF MAGELLAN
0652 " ENVIRONMENTAL EFFECTS, CHILE, OIL SPILLS, SPILL RESPONSE, MOVEMENT, SPREADING, STRAIT OF MAGELLAN
0653 " FOREIGN GOVERNMENTS, CHILE, OIL SPILLS, SPILL RESPONSE, TANKERS, OIL TRANSFER, STRAIT OF MAGELLAN
0345 MICROORGANISMS, DETECTION, CONTAMINATION, CONCENTRATIONS, BIOINDICATORS, SOURCE IDENTIFICATION, UPTAKE, TOXICITY, *PROTOZOA
0346 " DETECTION, CONTAMINATION, BIOINDICATORS, TOXICITY, UPTAKE, *PROTOZOA, *EUPLOTES DIADALEOS
0486 " BIOLOGICAL EFFECTS, *COMMUNITY STRUCTURE, *DIATOMS
0491 " METABOLISM, FRESHWATER, BIOLOGICAL EFFECTS, BIBLIOGRAPHIES, ANIMALS, OIL SPILLS, PLANTS, SEAWATER
0501 " HYDROCARBONS , BACTERIA, ALGAE, PLANKTON
0514 " FUNGI, FRESHWATER, DISPERSANTS, BIOLOGICAL EFFECTS, BACTERIA, ZOOPLANKTON
0561 " MARINE ORGANISMS, LEGISLATION, EKOFISK BLOWOUT, ECOSYSTEMS, BIOLOGICAL EFFECTS, ARGO MERCHANT SPILL, OIL SPILLS, TANKERS, WILDLIFE, SHIPS, SOCIOECONOMIC EFFECTS, TOXICITY
0577 " DISPERSANTS, CRUDE OIL, BIODEGRADATION, PREDICTIONS, HYDROS
0578 " METABOLISM, HYDROCARBONS , GROWTH, BIODEGRADATION, BACTERIA, OXIDATION, *CYCLOHEXANOL
0579 " HYDROCARBONS , CRUDE OIL, BIODEGRADATION, BACTERIA, SPILL CLEANUP, *PLASMID TRANSFER, *GENETIC ENGINEERING, *PSEUDOMONAS
0580 " BIODEGRADATION, BACTERIA, *N-PARAFFINS
0582 " METABOLISM, HYDROCARBONS , GROWTH, BIODEGRADATION, BACTERIA, *BUTADIENE
0584 " HYDROCARBONS , GC/MS, ESTUARIES, ECOSYSTEMS, CHEMICAL ANALYSIS, OIL SPILLS, MOVEMENT
0640 " FISHERIES, FISH, ENVIRONMENTAL EFFECTS, BIOLOGICAL EFFECTS, BASELINE STUDIES, ARCTIC, PHYSICAL EFFECTS, OIL SPILLS, SOCIOECONOMIC EFFECTS, NORTH SEA, OCS, OFFSHORE DEVELOPMENT
R012 " MARINE ENVIRONMENT, BIOLOGICAL EFFECTS, BIOINDICATORS, BACTERIA, SUBLETHAL EFFECTS, *CHEMOTAXIS
R035 " METABOLISM, HYDROCARBONS , CARCINOGENS, ALGAE, *PROTOZOA, *MICROSOMES, *MUTAGENS
R049 " ICE, CRUDE OIL, BIOLOGICAL EFFECTS, BIODEGRADATION, ARCTIC, ALASKA
R050 " BIODEGRADATION, BACTERIA, AROMATIC HYDROCARBONS, PAH, LAKE S, RIVERS, *GENETIC ENGINEERING, *PSUEDOMONAS
R051 " CHEMICAL ANALYSIS, BIODEGRADATION, BACTERIA, ANALYTICAL TECHNIQUES
R052 " MARINE ENVIRONMENT, ESTUARIES, CRUDE OIL, BIODEGRADATION, BACTERIA, SEDIMENTS
0546 MISSISSIPPI, GULF OF MEXICO, ENVIRONMENTAL EFFECTS, EIS, DEVELOPMENT , ONSHORE IMPACTS, SOCIOECONOMIC EFFECTS, OCS
0431 MISSISSIPPI RIVER, ICE, EQUIPMENT, SPILL RESPONSE, POLLUTION CONTROL, SHIPS, USCG, RIVERS, OIL REMOVAL
0611 " CONTINGENCY PLANNING, MODELS, RIVERS, OIL SPILLS, PREDICTIONS, *RIVERSPILL MODEL
0350 MODELS, GOVERNMENT AGENCIES, REMOTE SENSING, SURVEILLANCE, MONITORING, POLLUTION CONTROL, *NASA, *SATELLITES
0352 " ESTUARIES, DRIFT, DELAWARE BAY, REMOTE SENSING, SPREADING, MOVEMENT, OIL SLICKS, SURVEILLANCE, *ESTUARINE FRONTS
0374 " HYDROCARBONS , CONCENTRATIONS, COASTAL WATERS, BERMUDA, SEDIMENTS, TROPICAL REGIONS, SAMPLING
0389 " EQUIPMENT, BOOMS, BEHAVIOR, SPILL CONTAINMENT, OIL SLICKS, PHYSICAL EFFECTS
0446 " ICE, CONTINGENCY PLANNING, ARCTIC, SPILL RESPONSE, MOVEMENT, SPREADING

0469 MODELS, EQUIPMENT, CONTINGENCY PLANNING, BOOMS, SPILL RESPONSE, RISK ANALYSIS, SKIMMERS, *COMPUTER SIMULATIONS
0527 " ENVIRONMENTAL EFFECTS, DISPERSION, OIL SLICKS, SEA SURFACE, PHYSICAL EFFECTS, *WIND WAVES
0529 " COST ANALYSIS, BASELINE STUDIES, SOCIOECONOMIC EFFECTS, OIL SPILLS, PREDICTIONS
0543 " GOVERNMENT AGENCIES, ENVIRONMENTAL MANAGEMENT, BLM, BASELINE STUDIES, ALASKA , OCS, NOAA
0581 " HYDROCARBONS , GROUNDWATER, EMULSIONS, CHEMICAL ANALYSIS, BIODEGRADATION, SOIL, RESPIRATION
0585 " ICE, FUEL OIL, BUZZARDS BAY, BOUCHARD 65 SPILL, MOVEMENT, OIL SPILLS
0594 " DRIFT, MOVEMENT, SPREADING, PREDICTIONS, SEA SURFACE, SPILL TRAJECTORIES, PHYSICAL EFFECTS
0595 " FATE, BLOWOUTS, BEHAVIOR, OFFSHORE DEVELOPMENT
0596 " COASTAL WATERS, CALIFORNIA, OIL SPILLS, SHIPS, TANKERS, OIL TRANSPORT, PREDICTIONS, PACIFIC COAST
0597 " FATE, ENVIRONMENTAL EFFECTS, DISPERSANTS, BEHAVIOR, OIL SPILLS, SPILL RESPONSE, SPILL CLEANUP, RISK ANALYSIS, SOURCE IDENTIFICATION
0598 " GEORGES BANK, FISHERIES, SPILL RESPONSE, MOVEMENT, SPILL TRAJECTORIES, PREDICTIONS
0600 " DRIFT, ARGO MERCHANT SPILL, OIL SPILLS, MOVEMENT, SPILL TRAJECTORIES, PREDICTIONS, SPREADING
0601 " ESTUARIES, BEHAVIOR, SPREADING, MOVEMENT, PREDICTIONS, PHYSICAL EFFECTS, *TIDAL SIMULATIONS
0602 " ENVIRONMENTAL EFFECTS, ALASKA , PREDICTIONS, TANKERS, PORTS
0603 " DRIFT, OIL SPILLS, MOVEMENT, SPILL TRAJECTORIES, MONITORING, PREDICTIONS
0604 " HYDROCARBONS , SEDIMENTS, MOVEMENT, SUBARCTIC REGIONS
0605 " OIL SPILLS, TANKERS, PREDICTIONS, RISK ANALYSIS
0607 " GEORGES BANK, FISHERIES, FISH, FATE, ENVIRONMENTAL EFFECTS, DISPERSANTS, BIOLOGICAL EFFECTS, OIL SPILLS
0608 " GEORGES BANK, FISHERIES, FISH, FATE, DRIFT, BIOLOGICAL EFFECTS, BEHAVIOR, ATLANTIC OCEAN, OIL SPILLS, PREDICTIONS, SPREADING, MOVEMENT, *COD
0609 " GROUNDWATER, ESTUARIES, ENVIRONMENTAL EFFECTS, ECONOMICS, OCS, OFFSHORE DEVELOPMENT, OIL SPILLS, WATER QUALITY
0611 " MISSISSIPPI RIVER, CONTINGENCY PLANNING, RIVERS, OIL SPILLS, PREDICTIONS, *RIVERSPILL MODEL
0612 " BEAUFORT SEA, ARCTIC, OIL SPILLS, MOVEMENT, SPILL TRAJECTORIES, SEA SURFACE, PREDICTIONS
0624 " FISHERIES, FATE, BIOLOGICAL EFFECTS, BIODEGRADATION, BEHAVIOR, OIL SPILLS, MOLLUSKS, *RESEARCH PROGRAM
R040 " ENVIRONMENTAL EFFECTS, ATLANTIC COAST, RISK ANALYSIS, OIL SPILLS, OCS, OFFSHORE DEVELOPMENT
R056 " OCEANS, PREDICTIONS, SPILL TRAJECTORIES, SEDIMENTS, *NEW ZEALAND, *COOK STRAIT
R057 " FATE, BEHAVIOR, OIL SLICKS, PREDICTIONS, SANTA BARBARA CHANNEL
R058 " GROUNDWATER, CONTAMINATION, PREDICTIONS, OIL SHALE
R059 " ICE, BEAUFORT SEA, MOVEMENT, SPILL TRAJECTORIES, REMOTE SENSING, OFFSHORE DEVELOPMENT, RISK ANALYSIS, *RADAR
0494 MOLLUSKS, FUEL OIL, BEHAVIOR, TOXICITY, WSF, SUBLETHAL EFFECTS, *FEEDING, *CHEMORECEPTION, *ILYANASSA OBSOLETA
0496 " METABOLISM, INVERTEBRATES, ENVIRONMENTAL EFFECTS, *CAROTENOIDS
0508 " DISPERSANTS, CRUDE OIL, BIOLOGICAL EFFECTS, TOXICITY, MORTALITY, SUBLETHAL EFFECTS, *ARGOPECTEN IRRADIANS
0516 " MARINE ORGANISMS, ALASKA , SUBLETHAL EFFECTS, *MACOMA BALTHICA
0519 " INVERTEBRATES, CRUDE OIL, COASTS, BIOLOGICAL EFFECTS, BENTHOS, MORTALITY, URQUIOLA SPILL, SPAIN
0523 " MARINE ORGANISMS, INTERTIDAL ZONE, BIOLOGICAL EFFECTS, BIOASSAY, POLYCHAETES, UPTAKE
0525 " HYDROCARBONS , FISH, EKOFISK BLOWOUT, CONTAMINATION, BIOLOGICAL EFFECTS, BENTHOS, SAMPLING, NORTH SEA
0624 " MODELS, FISHERIES, FATE, BIOLOGICAL EFFECTS, BIODEGRADATION, BEHAVIOR, OIL SPILLS, *RESEARCH PROGRAM
0343 MONITORING, INVERTEBRATES, BENTHOS, OFFSHORE DEVELOPMENT, OIL FIELDS, NORTH SEA
0344 " MARINE ORGANISMS, ENVIRONMENTAL EFFECTS, ECOSYSTEMS, DEVELOPMENT , BASELINE STUDIES, ALGAE, ALASKA
0348 " CHEMICAL ANALYSIS, BALTIC SEA
0350 " MODELS, GOVERNMENT AGENCIES, REMOTE SENSING, SURVEILLANCE, POLLUTION CONTROL, *NASA, *SATELLITES
0351 " COASTAL WATERS, ARCTIC, REMOTE SENSING, TANKERS, OFFSHORE DEVELOPMENT, SURVEILLANCE, OIL SLICKS, SOURCES, *SURSAT SATELLITE SYSTEM
0355 " HYDROCARBONS , ANALYTICAL TECHNIQUES, REMOTE SENSING, MOVEMENT, SURVEILLANCE, SPILL TRAJECTORIES, SEA SURFACE
0357 " LAW ENFORCEMENT, EQUIPMENT, REMOTE SENSING, SURVEILLANCE, USCG, POLLUTION CONTROL, TANKERS, SHIPS, *AIREYE SYSTEM
0364 " EQUIPMENT, CHEMICAL ANALYSIS, BIBLIOGRAPHIES, ANALYTICAL TECHNIQUES, SAMPLING, SURVEILLANCE, SPECTROMETRY
0381 " CHEMICAL ANALYSIS, SOURCE IDENTIFICATION, PETROLEUM PRODUCTS, OIL SPILLS

0412 MONITORING, EQUIPMENT, DESIGN-ENGINEERING, SPILL REMOVAL, OIL-WATER SEPARATION, POLLUTION CONTROL, PATENT
0470 " DETECTION, POLLUTION CONTROL, WASTEWATERS, REFINERIES, OIL DISCHARGES, *RADIOTRACER TECHNIQUES
0504 " MARSHES, INVERTEBRATES, HYDROCARBONS , ECOSYSTEMS, CHEMICAL ANALYSIS, BIOINDICATORS, BENTHOS, AROMATIC HYDROCARBONS, OIL DISCHARGES, *BIOMAGNIFICATION
0540 " INTERTIDAL ZONE, ENVIRONMENTAL EFFECTS, CHROMATOGRAPHY, BIOLOGICAL EFFECTS, BIODEGRADATION, ONSHORE IMPACTS, SEDIMENTS, RESTORATION, TROPICAL REGIONS, RECOVERY, PUERTO RICO
0570 " MARSHES, BIOLOGICAL EFFECTS, BENTHOS, PIPELINES, OIL SPILLS, PLANTS, SPILL CLEANUP, TEXAS
0603 " MODELS, DRIFT, OIL SPILLS, MOVEMENT, SPILL TRAJECTORIES, PREDICTIONS
0614 " FATE, DISPERSION, DISPERSANTS, BOOMS, OIL SPILLS, SPILL CONTAINMENT, SPREADING, MOVEMENT
0615 " FATE, COASTAL WATERS, SOURCES, SOURCE IDENTIFICATION, OCS, *POLLUTANT TRANSFER
0629 " ENVIRONMENTAL PROTECTION, DEVELOPMENT , REGULATIONS, OCS, OFFSHORE DEVELOPMENT
0668 " HYDROCARBONS , GRAVITY SEPARATION, FLOCCULATION, BALLAST , AROMATIC HYDROCARBONS, ANALYTICAL TECHNIQUES, ALASKA , OIL REMOVAL, WASTEWATER TREATMENT
R011 " CONTAMINATION, BIOLOGICAL EFFECTS, BIOINDICATORS
R013 " EQUIPMENT, DETECTION, ANALYTICAL TECHNIQUES, SURVEILLANCE
R015 " DETECTION, REMOTE SENSING, OIL SPILLS, *RADAR
R017 " DETECTION, CRUDE OIL, ANALYTICAL TECHNIQUES, OIL SPILLS, REMOTE SENSING, SURVEILLANCE, WEATHERING, *AGING
R037 " MARINE ENVIRONMENT, GROWTH, FISH, ENVIRONMENTAL EFFECTS, BIOLOGICAL EFFECTS, BEHAVIOR, REPRODUCTION, TOXICITY
R062 " HYDROCARBONS , REFINERIES, WASTEWATERS, WATER QUALITY, POLLUTION CONTROL, *THERMAL OIL RECOVERY
0485 MORTALITY, INVERTEBRATES, CRUDE OIL, BENTHOS, ARCTIC, AMPHIPODS, ACUTE EFFECTS, TOXICITY, SUBLETHAL EFFECTS, SEDIMENTS
0489 " METABOLISM, GROWTH, CRUSTACEANS, CRUDE OIL, CONCENTRATIONS, BIOLOGICAL EFFECTS, WSF, REPRODUCTION, *CRANGON CRANGON
0498 " METABOLISM, GROWTH, FUEL OIL, DEVELOPMENT , AROMATIC HYDROCARBONS, WSF, TOXICITY, SUBLETHAL EFFECTS, RESPIRATION, *RHITHROPANOPEUS HARISSI, *LIMULUS POLYPHEMUS
0508 " MOLLUSKS, DISPERSANTS, CRUDE OIL, BIOLOGICAL EFFECTS, TOXICITY, SUBLETHAL EFFECTS, *ARGOPECTEN IRRADIANS
0510 " MARINE ORGANISMS, HYDROCARBONS , CRUSTACEANS, ALASKA , TOXICITY, SUBLETHAL EFFECTS
0519 " MOLLUSKS, INVERTEBRATES, CRUDE OIL, COASTS, BIOLOGICAL EFFECTS, BENTHOS, URQUIOLA SPILL, SPAIN
0521 " METULA SPILL, INVERTEBRATES, INTERTIDAL ZONE, DETECTION, CHILE, BIOLOGICAL EFFECTS, OIL SPILLS, RECOVERY, STRAIT OF MAGELLAN
0352 MOVEMENT, MODELS, ESTUARIES, DRIFT, DELAWARE BAY, REMOTE SENSING, SPREADING, OIL SLICKS, SURVEILLANCE, *ESTUARINE FRONTS
0355 " MONITORING, HYDROCARBONS , ANALYTICAL TECHNIQUES, REMOTE SENSING, SURVEILLANCE, SPILL TRAJECTORIES, SEA SURFACE
0446 " MODELS, ICE, CONTINGENCY PLANNING, ARCTIC, SPILL RESPONSE, SPREADING
0452 " EKOFISK BLOWOUT, CONTINGENCY PLANNING, SPILL RESPONSE, SOURCES, PREDICTIONS, OFFSHORE DEVELOPMENT, NORTH SEA
0526 " DISPERSION, CONTAMINATION, ANIMALS, OIL SPILLS, *SEA TURTLES
0535 " METULA SPILL, FATE, BEHAVIOR, RECOVERY, SPILL CLEANUP, PHYSICAL EFFECTS, OIL SPILLS, STRAIT OF MAGELLAN
0576 " MARINE MAMMALS, FISH, FATE, ENVIRONMENTAL EFFECTS, CONTINGENCY PLANNING, BIRDS, BIOLOGICAL EFFECTS, BEAUFORT SEA, OIL SPILLS, SPILL RESPONSE, TOXICITY, PLANKTON, *SCIENTIFIC RESPONSE
0584 " MICROORGANISMS, HYDROCARBONS , GC/MS, ESTUARIES, ECOSYSTEMS, CHEMICAL ANALYSIS, OIL SPILLS
0585 " MODELS, ICE, FUEL OIL, BUZZARDS BAY, BOUCHARD 65 SPILL, OIL SPILLS
0594 " MODELS, DRIFT, SPREADING, PREDICTIONS, SEA SURFACE, SPILL TRAJECTORIES, PHYSICAL EFFECTS
0598 " MODELS, GEORGES BANK, FISHERIES, SPILL RESPONSE, SPILL TRAJECTORIES, PREDICTIONS
0599 " DRIFT, SPREADING, SPILL TRAJECTORIES, SEA SURFACE
0600 " MODELS, DRIFT, ARGO MERCHANT SPILL, OIL SPILLS, SPILL TRAJECTORIES, PREDICTIONS, SPREADING
0601 " MODELS, ESTUARIES, BEHAVIOR, SPREADING, PREDICTIONS, PHYSICAL EFFECTS, *TIDAL SIMULATIONS
0603 " MONITORING, MODELS, DRIFT, OIL SPILLS, SPILL TRAJECTORIES, PREDICTIONS
0604 " MODELS, HYDROCARBONS , SEDIMENTS, SUBARCTIC REGIONS
0606 " BEHAVIOR, OIL SLICKS, SPILL CONTAINMENT, PHYSICAL EFFECTS
0608 " MODELS, GEORGES BANK, FISHERIES, FISH, FATE, DRIFT, BIOLOGICAL EFFECTS, BEHAVIOR, ATLANTIC OCEAN, OIL SPILLS, PREDICTIONS, SPREADING, *COD
0610 " GULF OF ALASKA, FATE, ANALYTICAL TECHNIQUES, PREDICTIONS, PHYSICAL EFFECTS, SAMPLING
0612 " MODELS, BEAUFORT SEA, ARCTIC, OIL SPILLS, SPILL TRAJECTORIES, SEA SURFACE, PREDICTIONS
0614 " MONITORING, FATE, DISPERSION, DISPERSANTS, BOOMS, OIL SPILLS, SPILL CONTAINMENT, SPREADING

0652 MOVEMENT, METULA SPILL, ENVIRONMENTAL EFFECTS, CHILE, OIL SPILLS, SPILL RESPONSE, SPREADING, STRAIT OF MAGELLAN
R054 " FATE, CONTAMINANTS, ALASKA , ADSORPTION, SOURCES, SEDIMENTS, PRODUCTION , *COOK INLET
R055 " ICE, FATE, ARCTIC, OIL SPILLS, PREDICTIONS, *POOLING
R059 " MODELS, ICE, BEAUFORT SEA, SPILL TRAJECTORIES, REMOTE SENSING, OFFSHORE DEVELOPMENT, RISK ANALYSIS, *RADAR
0347 NATURAL SEEPAGE, HYDROCARBONS , FISH, DISTRIBUTION, CHROMATOGRAPHY, CHEMICAL ANALYSIS, CALIFORNIA, BIOINDICATORS, BENTHOS, SEDIMENTS, OCS, SANTA BARBARA CHANNEL
0353 " EQUIPMENT, DETECTION, CALIFORNIA, REMOTE SENSING, OIL SLICKS, PLATFORMS, SURVEILLANCE, USCG, SANTA BARBARA CHANNEL, *RADAR SYSTEMS
0378 " CHEMICAL ANALYSIS, ANALYTICAL TECHNIQUES, SOURCE IDENTIFICATION, WEATHERING, SAMPLING, SPECTROSCOPY
0518 " MARINE ORGANISMS, CRUDE OIL, BIOLOGICAL EFFECTS, BENTHOS, SEDIMENTS, SANTA BARBARA CHANNEL
0623 " MARINE ORGANISMS, INTERTIDAL ZONE, FATE, DISTRIBUTION, CALIFORNIA, BIOLOGICAL EFFECTS, BEACHES, TAR, SEDIMENTS, SANTA BARBARA CHANNEL
0368 NEW YORK, HYDROCARBONS , HARBORS, DISTRIBUTION, CONCENTRATIONS, SAMPLING, SEDIMENTS, OCS
R069 " INFORMATION SYSTEMS, RESOURCE MANAGEMENT, STATISTICAL ANALYSIS, PUGET SOUND, WASHINGTON, *MESA
0543 NOAA, MODELS, GOVERNMENT AGENCIES, ENVIRONMENTAL MANAGEMENT, BLM, BASELINE STUDIES, ALASKA , OCS
R038 " MARINE ORGANISMS, HYDROCARBONS , FATE, ENVIRONMENTAL EFFECTS, ECOSYSTEMS, BIOLOGICAL EFFECTS, ANALYTICAL TECHNIQUES, TOXICITY, SUBARCTIC REGIONS
0548 NORTH CAROLINA, ENVIRONMENTAL EFFECTS, DEEPWATER PORTS, COST ANALYSIS, SOCIOECONOMIC EFFECTS, REFINERIES, PETROCHEMICALS, OIL TRANSPORT, STORAGE
0343 NORTH SEA, MONITORING, INVERTEBRATES, BENTHOS, OFFSHORE DEVELOPMENT, OIL FIELDS
0367 " HYDROCARBONS , DISTRIBUTION, DETECTION, CONCENTRATIONS, CHROMATOGRAPHY, CHEMICAL ANALYSIS, SAMPLING
0452 " MOVEMENT, EKOFISK BLOWOUT, CONTINGENCY PLANNING, SPILL RESPONSE, SOURCES, PREDICTIONS, OFFSHORE DEVELOPMENT
0525 " MOLLUSKS, HYDROCARBONS , FISH, EKOFISK BLOWOUT, CONTAMINATION, BIOLOGICAL EFFECTS, BENTHOS, SAMPLING
0531 " GULF OF ALASKA, FISHERIES, OFFSHORE DEVELOPMENT, OIL FIELDS, SOCIOECONOMIC EFFECTS, OCS
0583 " FATE, EKOFISK BLOWOUT, DRIFT, SPREADING, WEATHERING, STATISTICAL ANLYSIS, SEA SURFACE
0617 " HYDROCARBONS , GC/MS, FATE, EKOFISK BLOWOUT, DISTRIBUTION, CHEMICAL ANALYSIS, SPREADING
0618 " HYDROCARBONS , GC/MS, EKOFISK BLOWOUT, CONTAMINATION, CHEMICAL ANALYSIS, BENTHOS, SEDIMENTS
0620 " HYDROCARBONS , FATE, PLANKTON, UK, *CHLOROPHYLL, *CARBON
0625 " ECONOMICS, BIBLIOGRAPHIES, SOCIOECONOMIC EFFECTS, OCS, OFFSHORE DEVELOPMENT, OIL-GAS LEASING, ONSHORE IMPACTS
0638 " HYDROCARBONS , OIL DISCHARGES, PLATFORMS, POLLUTION CONTROL
0640 " MICROORGANISMS, FISHERIES, FISH, ENVIRONMENTAL EFFECTS, BIOLOGICAL EFFECTS, BASELINE STUDIES, ARCTIC, PHYSICAL EFFECTS, OIL SPILLS, SOCIOECONOMIC EFFECTS, OCS, OFFSHORE DEVELOPMENT
0483 NORWAY, MARINE ORGANISMS, MARINE ENVIRONMENT, HYDROCARBONS , CHRONIC EFFECTS, AROMATIC HYDROCARBONS, SEDIMENTS
0455 OCEANS, EQUIPMENT, DISPERSANTS, CONTINGENCY PLANNING, SPILL RESPONSE, SPILL CLEANUP, SPREADING, SHORELINES
0457 " LEGISLATION, INTERNATIONAL AGREEMENTS, POLLUTION PREVENTION
R056 " MODELS, PREDICTIONS, SPILL TRAJECTORIES, SEDIMENTS, *NEW ZEALAND, *COOK STRAIT
0347 OCS, NATURAL SEEPAGE, HYDROCARBONS , FISH, DISTRIBUTION, CHROMATOGRAPHY, CHEMICAL ANALYSIS, CALIFORNIA, BIOINDICATORS, BENTHOS, SEDIMENTS, SANTA BARBARA CHANNEL
0368 " NEW YORK, HYDROCARBONS , HARBORS, DISTRIBUTION, CONCENTRATIONS, SAMPLING, SEDIMENTS
0385 " EQUIPMENT, DESIGN-ENGINEERING, BLOWOUTS, ARCTIC, SPILL CONTAINMENT, SPILL REMOVAL, *UNDERWATER CONTAINMENT
0442 " EQUIPMENT, CONTINGENCY PLANNING, ATLANTIC OCEAN, SPILL COOPERATIVES, SPILL CLEANUP, SPILL RESPONSE, PERSONNEL TRAINING
0464 " LEGISLATION, ENVIRONMENTAL MANAGEMENT, ALASKA , REGULATIONS
0512 " INVERTEBRATES, HYDROCARBONS , CONTAMINATION, CALIFORNIA, BENTHOS, BASELINE STUDIES, SAMPLING
0531 " NORTH SEA, GULF OF ALASKA, FISHERIES, OFFSHORE DEVELOPMENT, OIL FIELDS, SOCIOECONOMIC EFFECTS
0543 " NOAA, MODELS, GOVERNMENT AGENCIES, ENVIRONMENTAL MANAGEMENT, BLM, BASELINE STUDIES, ALASKA
0546 " MISSISSIPPI, GULF OF MEXICO, ENVIRONMENTAL EFFECTS, EIS, DEVELOPMENT , ONSHORE IMPACTS, SOCIOECONOMIC EFFECTS
0549 " ENVIRONMENTAL EFFECTS, BIBLIOGRAPHIES, OFFSHORE DEVELOPMENT, SOCIOECONOMIC EFFECTS, ONSHORE IMPACTS, OIL-GAS LEASING, TEXAS
0609 " MODELS, GROUNDWATER, ESTUARIES, ENVIRONMENTAL EFFECTS, ECONOMICS, OFFSHORE DEVELOPMENT, OIL SPILLS, WATER QUALITY

0615 OCS, MONITORING, FATE, COASTAL WATERS, SOURCES, SOURCE IDENTIFICATION, *POLLUTANT TRANSFER
0625 " NORTH SEA, ECONOMICS, BIBLIOGRAPHIES, SOCIOECONOMIC EFFECTS, OFFSHORE DEVELOPMENT, OIL-GAS LEASING, ONSHORE IMPACTS
0627 " LIABILITY, LEGISLATION, ECONOMIC EFFECTS, COMPENSATION, SPILL CLEANUP
0629 " MONITORING, ENVIRONMENTAL PROTECTION, DEVELOPMENT , REGULATIONS, OFFSHORE DEVELOPMENT
0632 " ATLANTIC COAST, ONSHORE IMPACTS, OFFSHORE DEVELOPMENT
0634 " COASTAL ZONE MANAGEMENT, BLM, BIBLIOGRAPHIES, OFFSHORE DEVELOPMENT, OIL SPILLS
0635 " LOUISIANA, ENVIRONMENTAL EFFECTS, COASTAL ZONE MANAGEMENT, OFFSHORE DEVELOPMENT, OIL-GAS LEASING, ONSHORE IMPACTS, SOCIOECONOMIC EFFECTS
0636 " COASTAL ZONE MANAGEMENT, ONSHORE IMPACTS, OFFSHORE DEVELOPMENT, RESOURCE MANAGEMENT
0637 " GOVERNMENT AGENCIES, GEORGIA, ENVIRONMENTAL EFFECTS, DEVELOPMENT , ONSHORE IMPACTS, PIPELINES, OIL SPILLS, RESOURCE MANAGEMENT
0640 " NORTH SEA, MICROORGANISMS, FISHERIES, FISH, ENVIRONMENTAL EFFECTS, BIOLOGICAL EFFECTS, BASELINE STUDIES, ARCTIC, PHYSICAL EFFECTS, OIL SPILLS, SOCIOECONOMIC EFFECTS, OFFSHORE DEVELOPMENT
0642 " FISHERIES, COMPENSATION, COASTAL ZONE MANAGEMENT, COASTAL WATERS, OFFSHORE DEVELOPMENT, OIL-GAS LEASING, ONSHORE IMPACTS, SOCIOECONOMIC EFFECTS
0643 " LIABILITY, GULF OF ALASKA, FISHERIES, ENVIRONMENTAL MANAGEMENT, ECOSYSTEMS, ECONOMIC EFFECTS, BIOLOGICAL EFFECTS, ALASKA , SOCIOECONOMIC EFFECTS, TANKERS, SAFETY, OIL INDUSTRY, POLLUTION CONTROL
0644 " FISHERIES, ENVIRONMENTAL EFFECTS, ATLANTIC OCEAN, OFFSHORE DEVELOPMENT, REGULATIONS, ONSHORE IMPACTS, OIL INDUSTRY, SOCIOECONOMIC EFFECTS
0646 " FISHERIES, FISH, ENVIRONMENTAL EFFECTS, OFFSHORE DEVELOPMENT, US, *RESEARCH PROJECTS
0648 " GULF OF MEXICO, ENVIRONMENTAL EFFECTS, OFFSHORE EXPLORATION, OFFSHORE PRODUCTION, REFINING, OIL TRANSPORT, PETROLEUM PRODUCTS, *CONFERENCE
0649 " GEORGES BANK, FISHERIES, OFFSHORE DEVELOPMENT, OIL INDUSTRY, OIL-GAS LEASING
0650 " LOUISIANA, GULF OF MEXICO, ENVIRONMENTAL EFFECTS, SOCIOECONOMIC EFFECTS, OFFSHORE DEVELOPMENT
0656 " ENVIRONMENTAL EFFECTS, COST ANALYSIS, BIBLIOGRAPHIES, PIPELINES, OFFSHORE DEVELOPMENT, OIL TRANSPORT, OIL TRANSFER
0680 " CALIFORNIA, BIBLIOGRAPHIES, PACIFIC COAST, OFFSHORE DEVELOPMENT, *ENVIRONMENTAL INFORMATION, *LITERATURE REVIEW
R032 " FISH, CRUDE OIL, CHRONIC EFFECTS, BIOLOGICAL EFFECTS, TOXICITY, TEXAS, *HISTOPATHOLOGY, *SCIAENIDEA
R039 " ICE, FATE, COASTS, BEAUFORT SEA, BASELINE STUDIES, ARCTIC, SEDIMENTS, OIL SPILLS, PREDICTIONS
R040 " MODELS, ENVIRONMENTAL EFFECTS, ATLANTIC COAST, RISK ANALYSIS, OIL SPILLS, OFFSHORE DEVELOPMENT
0343 OFFSHORE DEVELOPMENT, NORTH SEA, MONITORING, INVERTEBRATES, BENTHOS, OIL FIELDS
0351 " MONITORING, COASTAL WATERS, ARCTIC, REMOTE SENSING, TANKERS, SURVEILLANCE, OIL SLICKS, SOURCES, *SURSAT SATELLITE SYSTEM
0452 " NORTH SEA, MOVEMENT, EKOFISK BLOWOUT, CONTINGENCY PLANNING, SPILL RESPONSE, SOURCES, PREDICTIONS
0531 " OCS, NORTH SEA, GULF OF ALASKA, FISHERIES, OIL FIELDS, SOCIOECONOMIC EFFECTS
0549 " OCS, ENVIRONMENTAL EFFECTS, BIBLIOGRAPHIES, SOCIOECONOMIC EFFECTS, ONSHORE IMPACTS, OIL-GAS LEASING, TEXAS
0595 " MODELS, FATE, BLOWOUTS, BEHAVIOR
0609 " OCS, MODELS, GROUNDWATER, ESTUARIES, ENVIRONMENTAL EFFECTS, ECONOMICS, OIL SPILLS, WATER QUALITY
0625 " OCS, NORTH SEA, ECONOMICS, BIBLIOGRAPHIES, SOCIOECONOMIC EFFECTS, OIL-GAS LEASING, ONSHORE IMPACTS
0629 " OCS, MONITORING, ENVIRONMENTAL PROTECTION, DEVELOPMENT , REGULATIONS
0632 " OCS, ATLANTIC COAST, ONSHORE IMPACTS
0634 " OCS, COASTAL ZONE MANAGEMENT, BLM, BIBLIOGRAPHIES, OIL SPILLS
0635 " OCS, LOUISIANA, ENVIRONMENTAL EFFECTS, COASTAL ZONE MANAGEMENT, OIL-GAS LEASING, ONSHORE IMPACTS, SOCIOECONOMIC EFFECTS
0636 " OCS, COASTAL ZONE MANAGEMENT, ONSHORE IMPACTS, RESOURCE MANAGEMENT
0640 " OCS, NORTH SEA, MICROORGANISMS, FISHERIES, FISH, ENVIRONMENTAL EFFECTS, BIOLOGICAL EFFECTS, BASELINE STUDIES, ARCTIC, PHYSICAL EFFECTS, OIL SPILLS, SOCIOECONOMIC EFFECTS
0642 " OCS, FISHERIES, COMPENSATION, COASTAL ZONE MANAGEMENT, COASTAL WATERS, OIL-GAS LEASING, ONSHORE IMPACTS, SOCIOECONOMIC EFFECTS
0644 " OCS, FISHERIES, ENVIRONMENTAL EFFECTS, ATLANTIC OCEAN, REGULATIONS, ONSHORE IMPACTS, OIL INDUSTRY, SOCIOECONOMIC EFFECTS
0645 " ONSHORE IMPACTS, REFINERIES, OIL TRANSFER, PETROCHEMICALS, *ONSHORE FACILITIES
0646 " OCS, FISHERIES, FISH, ENVIRONMENTAL EFFECTS, US, *RESEARCH PROJECTS
0647 " GEORGES BANK, FISHERIES, ENVIRONMENTAL EFFECTS, OIL INDUSTRY, RESOURCE MANAGEMENT
0649 " OCS, GEORGES BANK, FISHERIES, OIL INDUSTRY, OIL-GAS LEASING
0650 " OCS, LOUISIANA, GULF OF MEXICO, ENVIRONMENTAL EFFECTS, SOCIOECONOMIC EFFECTS
0656 " OCS, ENVIRONMENTAL EFFECTS, COST ANALYSIS, BIBLIOGRAPHIES, PIPELINES, OIL TRANSPORT, OIL TRANSFER

0675 OFFSHORE DEVELOPMENT, EXPLORATION , PRODUCTION , OIL TRANSPORT, STORAGE, PIPELINES, REFINERIES, OIL SHALE, OIL SPILLS, *ACCIDENTS
0680 " OCS, CALIFORNIA, BIBLIOGRAPHIES, PACIFIC COAST, *ENVIRONMENTAL INFORMATION, *LITERATURE REVIEW
R040 " OCS, MODELS, ENVIRONMENTAL EFFECTS, ATLANTIC COAST, RISK ANALYSIS, OIL SPILLS
R042 " HYDROCARBONS , ENVIRONMENTAL EFFECTS, DISTRIBUTION, CONCENTRATIONS, BENTHOS, BEAUFORT SEA, BASELINE STUDIES, ALASKA , OFFSHORE PRODUCTION
R059 " MOVEMENT, MODELS, ICE, BEAUFORT SEA, SPILL TRAJECTORIES, REMOTE SENSING, RISK ANALYSIS, *RADAR
0639 OFFSHORE EXPLORATION, GULF OF MEXICO, ESTUARIES, ENVIRONMENTAL EFFECTS, DRILLING , COASTAL WATERS, OFFSHORE PRODUCTION
0648 " OCS, GULF OF MEXICO, ENVIRONMENTAL EFFECTS, OFFSHORE PRODUCTION, REFINING, OIL TRANSPORT, PETROLEUM PRODUCTS, *CONFERENCE
0440 OFFSHORE PRODUCTION, HARBORS, EQUIPMENT, SPILL COOPERATIVES, SPILL RESPONSE, SPILL CLEANUP
0639 " OFFSHORE EXPLORATION, GULF OF MEXICO, ESTUARIES, ENVIRONMENTAL EFFECTS, DRILLING , COASTAL WATERS
0648 " OFFSHORE EXPLORATION, OCS, GULF OF MEXICO, ENVIRONMENTAL EFFECTS, REFINING, OIL TRANSPORT, PETROLEUM PRODUCTS, *CONFERENCE
R041 " HYDROCARBONS , FOOD WEB, BIOGENIC HYDROCARBONS, BASELINE STUDIES, ANTARCTICA, *KRILL
R042 " OFFSHORE DEVELOPMENT, HYDROCARBONS , ENVIRONMENTAL EFFECTS, DISTRIBUTION, CONCENTRATIONS, BENTHOS, BEAUFORT SEA, BASELINE STUDIES, ALASKA
R061 " HYDROCARBONS , ECOSYSTEMS, DRILLING , BIOASSAY, PETROCHEMICALS, TOXICITY, *DRILLING MUDS
0354 OIL DISCHARGES, ENVIRONMENTAL DETERIORATION, DETECTION, REMOTE SENSING, SOURCES, WATER QUALITY, *HONG KONG
0468 " GOVERNMENT AGENCIES, POLLUTION CONTROL, TANKERS, POLLUTION PREVENTION, UK
0470 " MONITORING, DETECTION, POLLUTION CONTROL, WASTEWATERS, REFINERIES, *RADIOTRACER TECHNIQUES
0504 " MONITORING, MARSHES, INVERTEBRATES, HYDROCARBONS , ECOSYSTEMS, CHEMICAL ANALYSIS, BIOINDICATORS, BENTHOS, AROMATIC HYDROCARBONS, *BIOMAGNIFICATION
0628 " LEGISLATION, INDUSTRIES, ECONOMICS, COST ANALYSIS, POLLUTION CONTROL, WASTEWATERS
0638 " NORTH SEA, HYDROCARBONS , PLATFORMS, POLLUTION CONTROL
R021 " ESTUARIES, DELAWARE, SOURCE IDENTIFICATION, SEDIMENTS, *PHENOLIC COMPOUNDS, *URBAN RUNOFF
R063 " OIL TRANSFER, TANKERS, SHIPS, POLLUTION PREVENTION, SAN FRANCISCO BAY
0343 OIL FIELDS, OFFSHORE DEVELOPMENT, NORTH SEA, MONITORING, INVERTEBRATES, BENTHOS
0531 " OFFSHORE DEVELOPMENT, OCS, NORTH SEA, GULF OF ALASKA, FISHERIES, SOCIOECONOMIC EFFECTS
0542 " EXPLORATION , ENVIRONMENTAL EFFECTS, EIS, DRILLING , CANADA, BASELINE STUDIES, ARCTIC, SUBARCTIC REGIONS
R045 " GULF OF MEXICO, ENVIRONMENTAL EFFECTS, ECOSYSTEMS, CONTAMINANTS
0544 OIL-GAS LEASING, MARINE ENVIRONMENT, ENVIRONMENTAL EFFECTS, DEVELOPMENT , BASELINE STUDIES, ALASKA
0549 " OFFSHORE DEVELOPMENT, OCS, ENVIRONMENTAL EFFECTS, BIBLIOGRAPHIES, SOCIOECONOMIC EFFECTS, ONSHORE IMPACTS, TEXAS
0625 " OFFSHORE DEVELOPMENT, OCS, NORTH SEA, ECONOMICS, BIBLIOGRAPHIES, SOCIOECONOMIC EFFECTS, ONSHORE IMPACTS
0635 " OFFSHORE DEVELOPMENT, OCS, LOUISIANA, ENVIRONMENTAL EFFECTS, COASTAL ZONE MANAGEMENT, ONSHORE IMPACTS, SOCIOECONOMIC EFFECTS
0642 " OFFSHORE DEVELOPMENT, OCS, FISHERIES, COMPENSATION, COASTAL ZONE MANAGEMENT, COASTAL WATERS, ONSHORE IMPACTS, SOCIOECONOMIC EFFECTS
0649 " OFFSHORE DEVELOPMENT, OCS, GEORGES BANK, FISHERIES, OIL INDUSTRY
0448 OIL INDUSTRY, FOREIGN GOVERNMENTS, DISPERSANTS, CONTINGENCY PLANNING, AUSTRALIA, SPILL CLEANUP, POLLUTION CONTROL
0547 " KUWAIT, ENVIRONMENTAL PROTECTION, ENVIRONMENTAL MANAGEMENT, DEVELOPMENT , BASELINE STUDIES, RISK ANALYSIS, PERSIAN GULF, *UNEP
0630 " LAW ENFORCEMENT, EPA, CONTINGENCY PLANNING, POLLUTION PREVENTION, PRODUCTION , REGULATIONS, *STRIPPER WELLS
0643 " OCS, LIABILITY, GULF OF ALASKA, FISHERIES, ENVIRONMENTAL MANAGEMENT, ECOSYSTEMS, ECONOMIC EFFECTS, BIOLOGICAL EFFECTS, ALASKA , SOCIOECONOMIC EFFECTS, TANKERS, SAFETY, POLLUTION CONTROL
0644 " OFFSHORE DEVELOPMENT, OCS, FISHERIES, ENVIRONMENTAL EFFECTS, ATLANTIC OCEAN, REGULATIONS, ONSHORE IMPACTS, SOCIOECONOMIC EFFECTS
0647 " OFFSHORE DEVELOPMENT, GEORGES BANK, FISHERIES, ENVIRONMENTAL EFFECTS, RESOURCE MANAGEMENT
0649 " OIL-GAS LEASING, OFFSHORE DEVELOPMENT, OCS, GEORGES BANK, FISHERIES
0666 " EQUIPMENT, DRILLING , DETECTION, POLLUTION CONTROL, OIL TRANSPORT, OIL TRANSFER, STORAGE, PIPELINES, TANKERS, SPILL CONTAINMENT, SPILL REMOVAL, SPILL DISPOSAL
R043 " ENVIRONMENTAL EFFECTS, EIS
0431 OIL REMOVAL, MISSISSIPPI RIVER, ICE, EQUIPMENT, SPILL RESPONSE, POLLUTION CONTROL, SHIPS, USCG, RIVERS
0668 " MONITORING, HYDROCARBONS , GRAVITY SEPARATION, FLOCCULATION, BALLAST , AROMATIC HYDROCARBONS, ANALYTICAL TECHNIQUES, ALASKA , WASTEWATER TREATMENT

0675 OIL SHALE, OFFSHORE DEVELOPMENT, EXPLORATION , PRODUCTION , OIL TRANSPORT, STORAGE, PIPELINES, REFINERIES, OIL SPILLS, *ACCIDENTS
0679 " DEVELOPMENT , POLLUTION CONTROL, WASTEWATER TREATMENT, *RESARCH PROJECTS
R031 " METABOLISM, GULF OF MEXICO, CORALS, CARCINOGENS, BIOLOGICAL EFFECTS, BEHAVIOR, *DRILLING FLUIDS
R058 " MODELS, GROUNDWATER, CONTAMINATION, PREDICTIONS
R064 " BIOLOGICAL TREATMENT, AROMATIC HYDROCARBONS, REFINING, WASTEWATERS, POLLUTION CONTROL
0351 OIL SLICKS, OFFSHORE DEVELOPMENT, MONITORING, COASTAL WATERS, ARCTIC, REMOTE SENSING, TANKERS, SURVEILLANCE, SOURCES, *SURSAT SATELLITE SYSTEM
0352 " MOVEMENT, MODELS, ESTUARIES, DRIFT, DELAWARE BAY, REMOTE SENSING, SPREADING, SURVEILLANCE, *ESTUARINE FRONTS
0353 " NATURAL SEEPAGE, EQUIPMENT, DETECTION, CALIFORNIA, REMOTE SENSING, PLATFORMS, SURVEILLANCE, USCG, SANTA BARBARA CHANNEL, *RADAR SYSTEMS
0386 " EQUIPMENT, EPA, DESIGN-ENGINEERING, BOOMS, SPILL CONTAINMENT, *PERFORMANCE TESTING, *OHMSETT FACILITY
0389 " MODELS, EQUIPMENT, BOOMS, BEHAVIOR, SPILL CONTAINMENT, PHYSICAL EFFECTS
0403 " ENVIRONMENTAL EFFECTS, DISPERSANTS, BEACHES, BEACH CLEANUP, ANALYTICAL TECHNIQUES, TOXICITY, SPILL CLEANUP, UK, *LICENSING
0405 " DISPERSANTS, COST ANALYSIS, SPILL CLEANUP, SPILL REMOVAL, *AIRCRAFT
0414 " FATE, DISPERSANTS, WEATHERING, SPILL CLEANUP, TOXICITY
0421 " SPILL CLEANUP, SPILL RESPONSE
0422 " DISPERSANTS, CALIFORNIA, API, SPILL CLEANUP, SKIMMERS, *PETROLEUM CONTINGENCY ORGANIZATION, *FIELD TESTS
0479 " EQUIPMENT, DISPERSION, BIODEGRADATION, SPILL CONTAINMENT, SPILL CLEANUP, POLLUTION PREVENTION, SHIPS, TANKERS, SOURCES, STATISTICS, SPREADING
0527 " MODELS, ENVIRONMENTAL EFFECTS, DISPERSION, SEA SURFACE, PHYSICAL EFFECTS, *WIND WAVES
0589 " DISPERSION, BEHAVIOR, *RAINFALL, *ENTRAINMENT
0606 " MOVEMENT, BEHAVIOR, SPILL CONTAINMENT, PHYSICAL EFFECTS
R057 " MODELS, FATE, BEHAVIOR, PREDICTIONS, SANTA BARBARA CHANNEL
0356 OIL SPILLS, EQUIPMENT, BEAUFORT SEA, REMOTE SENSING, SURVEILLANCE
0362 " HYDROCARBONS , DISPERSANTS, CHEMICAL ANALYSIS, ANALYTICAL TECHNIQUES, SPECTROSCOPY
0366 " HYDROCARBONS , EVAPORATION, DISPERSANTS, CHEMICAL ANALYSIS, SAMPLING, *OIL SPILL VAPORS
0376 " METULA SPILL, GC/MS, CONCENTRATIONS, CHILE, CHEMICAL ANALYSIS, BIOLOGICAL EFFECTS, SAMPLING, SEDIMENTS, WEATHERING, ONSHORE IMPACTS, STRAIT OF MAGELLAN
0377 " LIABILITY, COMPENSATION, CHEMICAL ANALYSIS, SOURCE IDENTIFICATION, USCG
0381 " MONITORING, CHEMICAL ANALYSIS, SOURCE IDENTIFICATION, PETROLEUM PRODUCTS
0401 " INCINERATION, ICE, GREAT LAKES, FUEL OIL, SPILL CLEANUP, *IMPERIAL ST. CLAIR SPILL
0439 " FRANCE, EQUIPMENT, CONTINGENCY PLANNING, AMOCO CADIZ SPILL, SPILL RESPONSE, SPILL CLEANUP
0443 " CONTINGENCY PLANNING, SPILL RESPONSE, PERSONNEL TRAINING, TANKERS, SPILL CLEANUP
0458 " LEGISLATION, ECONOMIC EFFECTS, COST ANALYSIS, COMPENSATION, ALASKA , REGULATIONS, US
0459 " LIABILITY, LEGISLATION, ECONOMIC EFFECTS, COST ANALYSIS, COMPENSATION
0460 " LIABILITY, ECONOMIC EFFECTS, COST ANALYSIS, COMPENSATION, *LITIGATION
0463 " LEGISLATION, ENVIRONMENTAL MANAGEMENT, COMPENSATION, POLLUTION CONTROL, UK
0472 " ECONOMICS, COST ANALYSIS, TANKERS, SEGREGATED BALLAST, POLLUTION PREVENTION
0491 " MICROORGANISMS, METABOLISM, FRESHWATER, BIOLOGICAL EFFECTS, BIBLIOGRAPHIES, ANIMALS, PLANTS, SEAWATER
0513 " HYDROCARBONS , ESTUARIES, DISTRIBUTION, BIOMASS, BIOLOGICAL EFFECTS, ZOOPLANKTON
0515 " ICE, FRESHWATER, ECOSYSTEMS, CRUDE OIL, BIOLOGICAL EFFECTS, BACTERIA, PLANKTON
0521 " MORTALITY, METULA SPILL, INVERTEBRATES, INTERTIDAL ZONE, DETECTION, CHILE, BIOLOGICAL EFFECTS, RECOVERY, STRAIT OF MAGELLAN
0526 " MOVEMENT, DISPERSION, CONTAMINATION, ANIMALS, *SEA TURTLES
0529 " MODELS, COST ANALYSIS, BASELINE STUDIES, SOCIOECONOMIC EFFECTS, PREDICTIONS
0530 " ENVIRONMENTAL EFFECTS, ECONOMIC EFFECTS, COST ANALYSIS, SOCIAL EFFECTS
0534 " ENVIRONMENTAL EFFECTS, ECOSYSTEMS, CONTINGENCY PLANNING, SPILL CLEANUP, RECOVERY
0535 " MOVEMENT, METULA SPILL, FATE, BEHAVIOR, RECOVERY, SPILL CLEANUP, PHYSICAL EFFECTS, STRAIT OF MAGELLAN
0536 " METULA SPILL, FATE, ENVIRONMENTAL EFFECTS, COASTAL WATERS, URQUIOLA SPILL, *VULNERABILITY INDEX
0537 " LEAKAGE, JAPAN, FUEL OIL, FISHERIES, RECOVERY, RESTORATION, WATER QUALITY
0541 " MARINE ORGANISMS, ENVIRONMENTAL EFFECTS, DISPERSANTS, BIOLOGICAL EFFECTS, AMOCO CADIZ SPILL, RECOVERY, SPILL CLEANUP
0551 " LIABILITY, LEGISLATION, COMPENSATION, US GOVERNMENT, SPILL CLEANUP
0552 " LIABILITY, LEGISLATION, COMPENSATION, *SUPERFUND
0553 " LIABILITY, ECONOMIC EFFECTS, COST ANALYSIS, COMPENSATION
0554 " LIABILITY, INDUSTRIES, ECONOMIC EFFECTS, COMPENSATION, POLLUTION CONTROL
0555 " LEGISLATION, ENVIRONMENTAL MANAGEMENT, COMPENSATION, *DAMAGE ASSESSMENT
0561 " MICROORGANISMS, MARINE ORGANISMS, LEGISLATION, EKOFISK BLOWOUT, ECOSYSTEMS, BIOLOGICAL EFFECTS, ARGO MERCHANT SPILL, TANKERS, WILDLIFE, SHIPS, SOCIOECONOMIC EFFECTS, TOXICITY

0567 OIL SPILLS, METULA SPILL, MARSHES, ENVIRONMENTAL EFFECTS, CHILE, BEACHES, STRAIT OF MAGELLAN, TANKERS
0568 " METULA SPILL, INTERTIDAL ZONE, ENVIRONMENTAL EFFECTS, CHILE, BIOLOGICAL EFFECTS, RECOVERY, ONSHORE IMPACTS, SPILL CLEANUP, STRAIT OF MAGELLAN
0569 " ESTUARIES, ENVIRONMENTAL DETERIORATION, ECONOMIC EFFECTS, COST ANALYSIS, CONTAMINANTS, COASTAL ZONE MANAGEMENT
0570 " MONITORING, MARSHES, BIOLOGICAL EFFECTS, BENTHOS, PIPELINES, PLANTS, SPILL CLEANUP, TEXAS
0576 " MOVEMENT, MARINE MAMMALS, FISH, FATE, ENVIRONMENTAL EFFECTS, CONTINGENCY PLANNING, BIRDS, BIOLOGICAL EFFECTS, BEAUFORT SEA, SPILL RESPONSE, TOXICITY, PLANKTON, *SCIENTIFIC RESPONSE
0584 " MOVEMENT, MICROORGANISMS, HYDROCARBONS , GC/MS, ESTUARIES, ECOSYSTEMS, CHEMICAL ANALYSIS
0585 " MOVEMENT, MODELS, ICE, FUEL OIL, BUZZARDS BAY, BOUCHARD 65 SPILL
0596 " MODELS, COASTAL WATERS, CALIFORNIA, SHIPS, TANKERS, OIL TRANSPORT, PREDICTIONS, PACIFIC COAST
0597 " MODELS, FATE, ENVIRONMENTAL EFFECTS, DISPERSANTS, BEHAVIOR, SPILL RESPONSE, SPILL CLEANUP, RISK ANALYSIS, SOURCE IDENTIFICATION
0600 " MOVEMENT, MODELS, DRIFT, ARGO MERCHANT SPILL, SPILL TRAJECTORIES, PREDICTIONS, SPREADING
0603 " MOVEMENT, MONITORING, MODELS, DRIFT, SPILL TRAJECTORIES, PREDICTIONS
0605 " MODELS, TANKERS, PREDICTIONS, RISK ANALYSIS
0607 " MODELS, GEORGES BANK, FISHERIES, FISH, FATE, ENVIRONMENTAL EFFECTS, DISPERSANTS, BIOLOGICAL EFFECTS
0608 " MOVEMENT, MODELS, GEORGES BANK, FISHERIES, FISH, FATE, DRIFT, BIOLOGICAL EFFECTS, BEHAVIOR, ATLANTIC OCEAN, PREDICTIONS, SPREADING, *COD
0609 " OFFSHORE DEVELOPMENT, OCS, MODELS, GROUNDWATER, ESTUARIES, ENVIRONMENTAL EFFECTS, ECONOMICS, WATER QUALITY
0611 " MODELS, MISSISSIPPI RIVER, CONTINGENCY PLANNING, RIVERS, PREDICTIONS, *RIVERSPILL MODEL
0612 " MOVEMENT, MODELS, BEAUFORT SEA, ARCTIC, SPILL TRAJECTORIES, SEA SURFACE, PREDICTIONS
0614 " MOVEMENT, MONITORING, FATE, DISPERSION, DISPERSANTS, BOOMS, SPILL CONTAINMENT, SPREADING
0621 " GREENLAND, FUEL OIL, FATE, EVAPORATION, TANKERS, *POTOMAC SPILL
0624 " MOLLUSKS, MODELS, FISHERIES, FATE, BIOLOGICAL EFFECTS, BIODEGRADATION, BEHAVIOR, *RESEARCH PROGRAM
0626 " ENVIRONMENTAL EFFECTS, ECONOMICS, COST ANALYSIS, COASTAL ZONE MANAGEMENT, RESOURCE MANAGEMENT
0634 " OFFSHORE DEVELOPMENT, OCS, COASTAL ZONE MANAGEMENT, BLM, BIBLIOGRAPHIES
0637 " OCS, GOVERNMENT AGENCIES, GEORGIA, ENVIRONMENTAL EFFECTS, DEVELOPMENT , ONSHORE IMPACTS, PIPELINES, RESOURCE MANAGEMENT
0640 " OFFSHORE DEVELOPMENT, OCS, NORTH SEA, MICROORGANISMS, FISHERIES, FISH, ENVIRONMENTAL EFFECTS, BIOLOGICAL EFFECTS, BASELINE STUDIES, ARCTIC, PHYSICAL EFFECTS, SOCIOECONOMIC EFFECTS
0652 " MOVEMENT, METULA SPILL, ENVIRONMENTAL EFFECTS, CHILE, SPILL RESPONSE, SPREADING, STRAIT OF MAGELLAN
0653 " METULA SPILL, FOREIGN GOVERNMENTS, CHILE, SPILL RESPONSE, TANKERS, OIL TRANSFER, STRAIT OF MAGELLAN
0655 " LEGISLATION, GOVERNMENT AGENCIES, ENVIRONMENTAL PROTECTION, PIPELINES, SAFETY, POLLUTION PREVENTION, REGULATIONS
0675 " OIL SHALE, OFFSHORE DEVELOPMENT, EXPLORATION , PRODUCTION , OIL TRANSPORT, STORAGE, PIPELINES, REFINERIES, *ACCIDENTS
R015 " MONITORING, DETECTION, REMOTE SENSING, *RADAR
R017 " MONITORING, DETECTION, CRUDE OIL, ANALYTICAL TECHNIQUES, REMOTE SENSING, SURVEILLANCE, WEATHERING, *AGING
R025 " DISPERSANTS, SPILL CLEANUP
R033 " FRESHWATER, ECOSYSTEMS, BIOMASS, BIOLOGICAL EFFECTS, ARCTIC, ALGAE, ALASKA , ZOOPLANKTON, REPRODUCTION, UPTAKE, *TUNDRA PONDS
R034 " MARINE MAMMALS, MARINE ENVIRONMENT, HABITATS, ENVIRONMENTAL EFFECTS, BIOLOGICAL EFFECTS, ANIMALS, *SEA OTTERS
R039 " OCS, ICE, FATE, COASTS, BEAUFORT SEA, BASELINE STUDIES, ARCTIC, SEDIMENTS, PREDICTIONS
R040 " OFFSHORE DEVELOPMENT, OCS, MODELS, ENVIRONMENTAL EFFECTS, ATLANTIC COAST, RISK ANALYSIS
R046 " INFORMATION SYSTEMS, ENVIRONMENTAL EFFECTS, CONTINGENCY PLANNING, ANALYTICAL TECHNIQUES, SPILL RESPONSE
R055 " MOVEMENT, ICE, FATE, ARCTIC, PREDICTIONS, *POOLING
0659 OIL TANKS, INLAND, EPA, CONTINGENCY PLANNING, COASTS, STORAGE, POLLUTION PREVENTION, USN, REGULATIONS
0657 OIL TERMINALS, INDUSTRIES, GOVERNMENT AGENCIES, CONTINGENCY PLANNING, ALASKA , PORTS , OIL TRANSPORT, SPILL RESPONSE, SPILL CLEANUP, USCG, *PORT VALDEZ
0382 OIL TRANSFER, EQUIPMENT, DESIGN-ENGINEERING, SPILL CONTAINMENT, SPILL REMOVAL, SHIPS, PATENT, *HYDRO-CARPET
0550 " DELAWARE BAY, BENTHOS, BASELINE STUDIES, PHYTOPLANKTON, ZOOPLANKTON, SHIPS

0633 OIL TRANSFER, INDUSTRIES, GOVERNMENT AGENCIES, ESTUARIES, ENVIRONMENTAL EFFECTS, COASTAL ZONE MANAGEMENT, REFINERIES, PETROCHEMICALS
0645 " OFFSHORE DEVELOPMENT, ONSHORE IMPACTS, REFINERIES, PETROCHEMICALS, *ONSHORE FACILITIES
0653 " OIL SPILLS, METULA SPILL, FOREIGN GOVERNMENTS, CHILE, SPILL RESPONSE, TANKERS, STRAIT OF MAGELLAN
0656 " OFFSHORE DEVELOPMENT, OCS, ENVIRONMENTAL EFFECTS, COST ANALYSIS, BIBLIOGRAPHIES, PIPELINES, OIL TRANSPORT
0658 " EQUIPMENT, CONTINGENCY PLANNING, CALIFORNIA, TANKERS, SPILL CLEANUP, *LIGHTERING OPERATIONS, *VLCC
0666 " OIL INDUSTRY, EQUIPMENT, DRILLING , DETECTION, POLLUTION CONTROL, OIL TRANSPORT, STORAGE, PIPELINES, TANKERS, SPILL CONTAINMENT, SPILL REMOVAL, SPILL DISPOSAL
R063 " OIL DISCHARGES, TANKERS, SHIPS, POLLUTION PREVENTION, SAN FRANCISCO BAY
0465 OIL TRANSPORT, INTERNATIONAL CONVENTIONS, IMCO, FATE, BIOLOGICAL EFFECTS, REGULATIONS, TANKERS, SOURCES, *LONDON DUMPING CONVENTION
0548 " NORTH CAROLINA, ENVIRONMENTAL EFFECTS, DEEPWATER PORTS, COST ANALYSIS, SOCIOECONOMIC EFFECTS, REFINERIES, PETROCHEMICALS, STORAGE
0596 " OIL SPILLS, MODELS, COASTAL WATERS, CALIFORNIA, SHIPS, TANKERS, PREDICTIONS, PACIFIC COAST
0641 " INDUSTRIES, ESTUARIES, DEVELOPMENT , COASTAL WATERS, ALASKA , POLLUTION CONTOL, PRODUCTION , PIPELINES, TANKERS
0648 " OFFSHORE PRODUCTION, OFFSHORE EXPLORATION, OCS, GULF OF MEXICO, ENVIRONMENTAL EFFECTS, REFINING, PETROLEUM PRODUCTS, *CONFERENCE
0656 " OIL TRANSFER, OFFSHORE DEVELOPMENT, OCS, ENVIRONMENTAL EFFECTS, COST ANALYSIS, BIBLIOGRAPHIES, PIPELINES
0657 " OIL TERMINALS, INDUSTRIES, GOVERNMENT AGENCIES, CONTINGENCY PLANNING, ALASKA , PORTS , SPILL RESPONSE, SPILL CLEANUP, USCG, *PORT VALDEZ
0666 " OIL TRANSFER, OIL INDUSTRY, EQUIPMENT, DRILLING , DETECTION, POLLUTION CONTROL, STORAGE, PIPELINES, TANKERS, SPILL CONTAINMENT, SPILL REMOVAL, SPILL DISPOSAL
0675 " OIL SPILLS, OIL SHALE, OFFSHORE DEVELOPMENT, EXPLORATION , PRODUCTION , STORAGE, PIPELINES, REFINERIES, *ACCIDENTS
0678 " ENVIRONMENTAL PROTECTION, ECOSYSTEMS, COASTAL ZONE MANAGEMENT, ALASKA , RESOURCE MANAGEMENT, *PUBLIC PARTICIPATION
0375 OIL-WATER SEPARATION, DETECTION, CHEMICAL ANALYSIS, ANALYTICAL TECHNIQUES, WASTEWATERS, *IR
0412 " MONITORING, EQUIPMENT, DESIGN-ENGINEERING, SPILL REMOVAL, POLLUTION CONTROL, PATENT
0476 " FILTRATION, EQUIPMENT, DESIGN-ENGINEERING, BALLAST , POLLUTION PREVENTION, TANKERS
0667 " GRAVITY SEPARATION, WASTEWATER TREATMENT, SLUDGE , REUSE, PATENT
0672 " ABSORPTION, PLATFORMS, SORBENTS, PATENT, *SORBENT ENDLESS CORD
R068 " FRANCE, EQUIPMENT, DESIGN-ENGINEERING, ANALYTICAL TECHNIQUES, *PERFORMANCE TESTING
0376 ONSHORE IMPACTS, OIL SPILLS, METULA SPILL, GC/MS, CONCENTRATIONS, CHILE, CHEMICAL ANALYSIS, BIOLOGICAL EFFECTS, SAMPLING, SEDIMENTS, WEATHERING, STRAIT OF MAGELLAN
0540 " MONITORING, INTERTIDAL ZONE, ENVIRONMENTAL EFFECTS, CHROMATOGRAPHY, BIOLOGICAL EFFECTS, BIODEGRADATION, SEDIMENTS, RESTORATION, TROPICAL REGIONS, RECOVERY, PUERTO RICO
0546 " OCS, MISSISSIPPI, GULF OF MEXICO, ENVIRONMENTAL EFFECTS, EIS, DEVELOPMENT , SOCIOECONOMIC EFFECTS
0549 " OIL-GAS LEASING, OFFSHORE DEVELOPMENT, OCS, ENVIRONMENTAL EFFECTS, BIBLIOGRAPHIES, SOCIOECONOMIC EFFECTS, TEXAS
0568 " OIL SPILLS, METULA SPILL, INTERTIDAL ZONE, ENVIRONMENTAL EFFECTS, CHILE, BIOLOGICAL EFFECTS, RECOVERY, SPILL CLEANUP, STRAIT OF MAGELLAN
0625 " OIL-GAS LEASING, OFFSHORE DEVELOPMENT, OCS, NORTH SEA, ECONOMICS, BIBLIOGRAPHIES, SOCIOECONOMIC EFFECTS
0632 " OFFSHORE DEVELOPMENT, OCS, ATLANTIC COAST
0635 " OIL-GAS LEASING, OFFSHORE DEVELOPMENT, OCS, LOUISIANA, ENVIRONMENTAL EFFECTS, COASTAL ZONE MANAGEMENT, SOCIOECONOMIC EFFECTS
0636 " OFFSHORE DEVELOPMENT, OCS, COASTAL ZONE MANAGEMENT, RESOURCE MANAGEMENT
0637 " OIL SPILLS, OCS, GOVERNMENT AGENCIES, GEORGIA, ENVIRONMENTAL EFFECTS, DEVELOPMENT , PIPELINES, RESOURCE MANAGEMENT
0642 " OIL-GAS LEASING, OFFSHORE DEVELOPMENT, OCS, FISHERIES, COMPENSATION, COASTAL ZONE MANAGEMENT, COASTAL WATERS, SOCIOECONOMIC EFFECTS
0644 " OIL INDUSTRY, OFFSHORE DEVELOPMENT, OCS, FISHERIES, ENVIRONMENTAL EFFECTS, ATLANTIC OCEAN, REGULATIONS, SOCIOECONOMIC EFFECTS
0645 " OIL TRANSFER, OFFSHORE DEVELOPMENT, REFINERIES, PETROCHEMICALS, *ONSHORE FACILITIES
0370 OXIDATION, MARINE ORGANISMS, GC/MS, CHEMICAL ANALYSIS, AROMATIC HYDROCARBONS, AMOCO CADIZ SPILL, SAMPLING, PAH, UPTAKE, SEDIMENTS, *MOUSSE
0578 " MICROORGANISMS, METABOLISM, HYDROCARBONS , GROWTH, BIODEGRADATION, BACTERIA, *CYCLOHEXANOL
0596 PACIFIC COAST, OIL TRANSPORT, OIL SPILLS, MODELS, COASTAL WATERS, CALIFORNIA, SHIPS, TANKERS, PREDICTIONS
0680 " OFFSHORE DEVELOPMENT, OCS, CALIFORNIA, BIBLIOGRAPHIES, *ENVIRONMENTAL INFORMATION, *LITERATURE REVIEW
R030 " MARINE ORGANISMS, HYDROCARBONS , GROWTH, ECOSYSTEMS, CRUDE OIL, CONCENTRATIONS, CHRONIC EFFECTS, BIOLOGICAL EFFECTS, UPTAKE, RELEASE, SEDIMENTS
0363 PACIFIC OCEAN, HYDROCARBONS , DETECTION, CONCENTRATIONS, CHEMICAL ANALYSIS

0360 PAH, MARINE ORGANISMS, HYDROCARBONS , GEORGES BANK, GC/MS, CHEMICAL ANALYSIS, BIOGENIC HYDROCARBONS, BENTHOS, ARGO MERCHANT SPILL, WSF, SEA SURFACE, SEDIMENTS, ZOOPLANKTON, SOURCES, TANKERS
0365 " DETECTION, CHROMATOGRAPHY, CHEMICAL ANALYSIS, ANALYTICAL TECHNIQUES, *UV PHOTOMETRY
0370 " OXIDATION, MARINE ORGANISMS, GC/MS, CHEMICAL ANALYSIS, AROMATIC HYDROCARBONS, AMOCO CADIZ SPILL, SAMPLING, UPTAKE, SEDIMENTS, *MOUSSE
0499 " HYDROCARBONS , CRUSTACEANS, SUBLETHAL EFFECTS, RESPIRATION, TOXICITY, *PHENANTHRENE, *RHITHROPANOPEUS HARRISII
R050 " MICROORGANISMS, BIODEGRADATION, BACTERIA, AROMATIC HYDROCARBONS, LAKE S, RIVERS, *GENETIC ENGINEERING, *PSUEDOMONAS
0382 PATENT, OIL TRANSFER, EQUIPMENT, DESIGN-ENGINEERING, SPILL CONTAINMENT, SPILL REMOVAL, SHIPS, *HYDRO-CARPET
0383 " EQUIPMENT, DESIGN-ENGINEERING, BOOMS, SPILL CONTAINMENT, SPILL REMOVAL
0384 " EQUIPMENT, DESIGN-ENGINEERING, BOOMS, SPILL CONTAINMENT, SHIPS
0390 " FLOTATION, EQUIPMENT, DESIGN-ENGINEERING, BOOMS, SPILL CONTAINMENT
0391 " EQUIPMENT, DESIGN-ENGINEERING, BOOMS, SPILL CONTAINMENT
0393 " LEAKAGE, SPILL CONTAINMENT, SHIPS, POLLUTION CONTROL, *CRYOTHERMAL METHOD
0394 " EQUIPMENT, DESIGN-ENGINEERING, BOOMS, SPILL CONTAINMENT
0398 " EQUIPMENT, DESIGN-ENGINEERING, BOOMS, SPILL CONTAINMENT, *TOW PLATES
0400 " EQUIPMENT, DESIGN-ENGINEERING, SPILL CLEANUP, SPILL CONTAINMENT
0409 " FLOTATION, EQUIPMENT, DESIGN-ENGINEERING, SPILL CLEANUP, SKIMMERS
0412 " OIL-WATER SEPARATION, MONITORING, EQUIPMENT, DESIGN-ENGINEERING, SPILL REMOVAL, POLLUTION CONTROL
0417 " EQUIPMENT, DESIGN-ENGINEERING, SPILL CLEANUP, SKIMMERS
0418 " EQUIPMENT, DESIGN-ENGINEERING, SPILL CLEANUP, SKIMMERS
0477 " EQUIPMENT, DRILLING , DESIGN-ENGINEERING, BLOWOUT PREVENTION
0667 " OIL-WATER SEPARATION, GRAVITY SEPARATION, WASTEWATER TREATMENT, SLUDGE , REUSE
0672 " OIL-WATER SEPARATION, ABSORPTION, PLATFORMS, SORBENTS, *SORBENT ENDLESS CORD
0423 PENNSYLVANIA, LEAKAGE, GROUNDWATER, FUEL OIL, SPILL CONTAINMENT, SPILL CLEANUP, SPILL REMOVAL, OILDISCHARGES, STORAGE
0547 PERSIAN GULF, OIL INDUSTRY, KUWAIT, ENVIRONMENTAL PROTECTION, ENVIRONMENTAL MANAGEMENT, DEVELOPMENT , BASELINE STUDIES, RISK ANALYSIS, *UNEP
0427 PERSONNEL TRAINING, CONTINGENCY PLANNING, CANADA, SPILL CLEANUP, SPILL RESPONSE
0428 " CONTINGENCY PLANNING, SPILL PREVENTION, SPILL CLEANUP, SPILL RESPONSE
0429 " CONTINGENCY PLANNING, SPILL CLEANUP, SPILL RESPONSE
0442 " OCS, EQUIPMENT, CONTINGENCY PLANNING, ATLANTIC OCEAN, SPILL COOPERATIVES, SPILL CLEANUP, SPILL RESPONSE
0443 " OIL SPILLS, CONTINGENCY PLANNING, SPILL RESPONSE, TANKERS, SPILL CLEANUP
0454 " GULF OF MEXICO, EQUIPMENT, CONTINGENCY PLANNING, SPILL COOPERATIVES, SPILL CLEANUP, SPILL RESPONSE
0557 " METULA SPILL, LEGISLATION, CONTINGENCY PLANNING, TEXAS
R026 " MANUALS, SPILL RESPONSE, SPILL CLEANUP
R027 " CONTINGENCY PLANNING, SPILL RESPONSE, SPILL CLEANUP, POLLUTION PREVENTION, POLLUTION CONTROL
0548 PETROCHEMICALS, OIL TRANSPORT, NORTH CAROLINA, ENVIRONMENTAL EFFECTS, DEEPWATER PORTS, COST ANALYSIS, SOCIOECONOMIC EFFECTS, REFINERIES, STORAGE
0633 " OIL TRANSFER, INDUSTRIES, GOVERNMENT AGENCIES, ESTUARIES, ENVIRONMENTAL EFFECTS, COASTAL ZONE MANAGEMENT, REFINERIES
0645 " ONSHORE IMPACTS, OIL TRANSFER, OFFSHORE DEVELOPMENT, REFINERIES, *ONSHORE FACILITIES
0670 " EQUIPMENT, ECONOMICS, DISPOSAL , REFINERIES, POLLUTION CONTROL, WASTEWATER TREATMENT, SOLID WASTES
R061 " OFFSHORE PRODUCTION, HYDROCARBONS , ECOSYSTEMS, DRILLING , BIOASSAY, TOXICITY, *DRILLING MUDS
0381 PETROLEUM PRODUCTS, OIL SPILLS, MONITORING, CHEMICAL ANALYSIS, SOURCE IDENTIFICATION
0502 " MARINE ORGANISMS, BLACK SEA, BIOLOGICAL EFFECTS
0524 " FUEL OIL, DISPERSANTS, CRUDE OIL, CHEMICAL ANALYSIS, BIOLOGICAL EFFECTS, TOXICITY
0528 " FOOD WEB, FISH, BIOLOGICAL EFFECTS, ABSORPTION, *TAINTING
0564 " ESTUARIES, ENVIRONMENTAL EFFECTS, COASTAL WATERS
0572 " CRUDE OIL, CONTAMINATION, BALTIC SEA
0575 " MARSHES, ESTUARIES, ENVIRONMENTAL EFFECTS, ECOSYSTEMS, CHRONIC EFFECTS, SUBLETHAL EFFECTS, PHYSICAL EFFECTS
0648 " OIL TRANSPORT, OFFSHORE PRODUCTION, OFFSHORE EXPLORATION, OCS, GULF OF MEXICO, ENVIRONMENTAL EFFECTS, REFINING, *CONFERENCE
0669 " CRUDE OIL, CHEMICAL ANALYSIS, REFINERIES, WASTEWATERS,DISPOSAL , PUGET SOUND, WASHINGTON
0389 PHYSICAL EFFECTS, OIL SLICKS, MODELS, EQUIPMENT, BOOMS, BEHAVIOR, SPILL CONTAINMENT
0527 " OIL SLICKS, MODELS, ENVIRONMENTAL EFFECTS, DISPERSION, SEA SURFACE, *WIND WAVES
0535 " OIL SPILLS, MOVEMENT, METULA SPILL, FATE, BEHAVIOR, RECOVERY, SPILL CLEANUP, STRAIT OF MAGELLAN
0575 " PETROLEUM PRODUCTS, MARSHES, ESTUARIES, ENVIRONMENTAL EFFECTS, ECOSYSTEMS, CHRONIC EFFECTS, SUBLETHAL EFFECTS
0587 " FRANCE, FATE, ESTUARIES, COASTS, BEHAVIOR, BEACHES, AMOCO CADIZ SPILL, SHORELINES, SEDIMENTS, *COASTAL PROCESSES, *VULNERABILITY INDEX
0588 " EMULSIONS, DISPERSANTS, BEHAVIOR

0592 PHYSICAL EFFECTS, FATE, CHEMICAL EFFECTS, BIODEGRADATION, AQUATIC ENVIRONMENT
0594 " MOVEMENT, MODELS, DRIFT, SPREADING, PREDICTIONS, SEA SURFACE, SPILL TRAJECTORIES
0601 " MOVEMENT, MODELS, ESTUARIES, BEHAVIOR, SPREADING, PREDICTIONS, *TIDAL SIMULATIONS
0606 " OIL SLICKS, MOVEMENT, BEHAVIOR, SPILL CONTAINMENT
0610 " MOVEMENT, GULF OF ALASKA, FATE, ANALYTICAL TECHNIQUES, PREDICTIONS, SAMPLING
0640 " OIL SPILLS, OFFSHORE DEVELOPMENT, OCS, NORTH SEA, MICROORGANISMS, FISHERIES, FISH, ENVIRONMENTAL EFFECTS, BIOLOGICAL EFFECTS, BASELINE STUDIES, ARCTIC, SOCIOECONOMIC EFFECTS
R028 " INFORMATION SYSTEMS, FATE, CHEMICAL EFFECTS, CHEMICAL ANALYSIS, BIOLOGICAL EFFECTS, BEHAVIOR, SPILL RESPONSE, SPILL TRAJECTORIES, *SCIENTIFIC RESPONSE
0550 PHYTOPLANKTON, OIL TRANSFER, DELAWARE BAY, BENTHOS, BASELINE STUDIES, ZOOPLANKTON, SHIPS
0563 " FISH, FINLAND, CONCENTRATIONS, BIOLOGICAL EFFECTS, BALTIC SEA, ANALYTICAL TECHNIQUES, SOURCE IDENTIFICATION, SWEDEN, USSR, *TAGGING
0433 PIPELINES, INLAND, ICE, CONTINGENCY PLANNING, ALASKA , SPILL RESPONSE, TRANS-ALASKA PIPELINE, SPILL CONTAINMENT, SPILL CLEANUP, RESTORATION
0570 " OIL SPILLS, MONITORING, MARSHES, BIOLOGICAL EFFECTS, BENTHOS, PLANTS, SPILL CLEANUP, TEXAS
0637 " ONSHORE IMPACTS, OIL SPILLS, OCS, GOVERNMENT AGENCIES, GEORGIA, ENVIRONMENTAL EFFECTS, DEVELOPMENT , RESOURCE MANAGEMENT
0641 " OIL TRANSPORT, INDUSTRIES, ESTUARIES, DEVELOPMENT , COASTAL WATERS, ALASKA , POLLUTION CONTOL, PRODUCTION , TANKERS
0655 " OIL SPILLS, LEGISLATION, GOVERNMENT AGENCIES, ENVIRONMENTAL PROTECTION, SAFETY, POLLUTION PREVENTION, REGULATIONS
0656 " OIL TRANSPORT, OIL TRANSFER, OFFSHORE DEVELOPMENT, OCS, ENVIRONMENTAL EFFECTS, COST ANALYSIS, BIBLIOGRAPHIES
0666 " OIL TRANSPORT, OIL TRANSFER, OIL INDUSTRY, EQUIPMENT, DRILLING , DETECTION, POLLUTION CONTROL, STORAGE, TANKERS, SPILL CONTAINMENT, SPILL REMOVAL, SPILL DISPOSAL
0675 " OIL TRANSPORT, OIL SPILLS, OIL SHALE, OFFSHORE DEVELOPMENT, EXPLORATION , PRODUCTION , STORAGE, REFINERIES, *ACCIDENTS
0501 PLANKTON, MICROORGANISMS, HYDROCARBONS , BACTERIA, ALGAE
0515 " OIL SPILLS, ICE, FRESHWATER, ECOSYSTEMS, CRUDE OIL, BIOLOGICAL EFFECTS, BACTERIA
0576 " OIL SPILLS, MOVEMENT, MARINE MAMMALS, FISH, FATE, ENVIRONMENTAL EFFECTS, CONTINGENCY PLANNING, BIRDS, BIOLOGICAL EFFECTS, BEAUFORT SEA, SPILL RESPONSE, TOXICITY, *SCIENTIFIC RESPONSE
0620 " NORTH SEA, HYDROCARBONS , FATE, UK, *CHLOROPHYLL, *CARBON
0491 PLANTS, OIL SPILLS, MICROORGANISMS, METABOLISM, FRESHWATER, BIOLOGICAL EFFECTS, BIBLIOGRAPHIES, ANIMALS, SEAWATER
0570 " PIPELINES, OIL SPILLS, MONITORING, MARSHES, BIOLOGICAL EFFECTS, BENTHOS, SPILL CLEANUP, TEXAS
0353 PLATFORMS, OIL SLICKS, NATURAL SEEPAGE, EQUIPMENT, DETECTION, CALIFORNIA, REMOTE SENSING, SURVEILLANCE, USCG, SANTA BARBARA CHANNEL, *RADAR SYSTEMS
0638 " OIL DISCHARGES, NORTH SEA, HYDROCARBONS , POLLUTION CONTROL
0672 " PATENT, OIL-WATER SEPARATION, ABSORPTION, SORBENTS, *SORBENT ENDLESS CORD
0349 POLLUTION CONTROL, EQUIPMENT, COASTAL WATERS, REMOTE SENSING, SURVEILLANCE, TANKERS, SHIPS, SWEDEN
0350 " MONITORING, MODELS, GOVERNMENT AGENCIES, REMOTE SENSING, SURVEILLANCE, *NASA, *SATELLITES
0357 " MONITORING, LAW ENFORCEMENT, EQUIPMENT, REMOTE SENSING, SURVEILLANCE, USCG, TANKERS, SHIPS, *AIREYE SYSTEM
0393 " PATENT, LEAKAGE, SPILL CONTAINMENT, SHIPS, *CRYOTHERMAL METHOD
0412 " PATENT, OIL-WATER SEPARATION, MONITORING, EQUIPMENT, DESIGN-ENGINEERING, SPILL REMOVAL
0431 " OIL REMOVAL, MISSISSIPPI RIVER, ICE, EQUIPMENT, SPILL RESPONSE, SHIPS, USCG, RIVERS
0432 " MEDITERRANEAN SEA, LAW ENFORCEMENT, INTERNATIONAL AGREEMENTS, IMCO, FOREIGN GOVERNMENTS, CONTINGENCY PLANNING, *ROCC, *UNEP
0435 " GOVERNMENT AGENCIES, CONTINGENCY PLANNING, SPILL RESPONSE, USCG, SPILL CLEANUP, *NATIONAL RESPONSE CENTER
0436 " CONTINGENCY PLANNING, SPILL RESPONSE, UK
0447 " INDUSTRIES, CONTINGENCY PLANNING, CANADA, BEAUFORT SEA, SPILL CLEANUP, SPILL RESPONSE
0448 " OIL INDUSTRY, FOREIGN GOVERNMENTS, DISPERSANTS, CONTINGENCY PLANNING, AUSTRALIA, SPILL CLEANUP
0463 " OIL SPILLS, LEGISLATION, ENVIRONMENTAL MANAGEMENT, COMPENSATION, UK
0467 " LEGISLATION, JAPAN, GOVERNMENT AGENCIES, FOREIGN GOVERNMENTS, EQUIPMENT, CONTINGENCY PLANNING, SPILL CLEANUP, REGULATIONS
0468 " OIL DISCHARGES, GOVERNMENT AGENCIES, TANKERS, POLLUTION PREVENTION, UK
0470 " OIL DISCHARGES, MONITORING, DETECTION, WASTEWATERS, REFINERIES, *RADIOTRACER TECHNIQUES
0471 " FOREIGN GOVERNMENTS, AUSTRALIA, POLLUTION PREVENTION, *PROCEEDINGS
0473 " INDUSTRIES, GOVERNMENT AGENCIES, ESTUARIES, ENVIRONMENTAL PROTECTION, DISPOSAL , DEVELOPMENT , PORTS , WASTEWATERS, REGULATIONS, US
0474 " LEGISLATION, INDUSTRIES, ECONOMICS, REGULATIONS, WASTWATER TREATMENT, *MANAGEMENT, *HANDBOOK

0478 POLLUTION CONTROL, MARINE ENVIRONMENT, AUSTRALIA, POLLUTION PREVENTION
0533 " LEGISLATION, JAPAN, FISHERIES, ENVIRONMENTAL EFFECTS, ECONOMIC EFFECTS, REGULATIONS
0545 " MARINE ORGANISMS, MARINE ENVIRONMENT, GUIDELINES, BASELINE STUDIES, ANALYTICAL TECHNIQUES, SAMPLING
0554 " OIL SPILLS, LIABILITY, INDUSTRIES, ECONOMIC EFFECTS, COMPENSATION
0574 " ESTUARIES, ENVIRONMENTAL EFFECTS, COASTAL ZONE MANAGEMENT, COASTAL WATERS, US, *PROCEEDINGS
0628 " OIL DISCHARGES, LEGISLATION, INDUSTRIES, ECONOMICS, COST ANALYSIS, WASTEWATERS
0638 " PLATFORMS, OIL DISCHARGES, NORTH SEA, HYDROCARBONS
0643 " OIL INDUSTRY, OCS, LIABILITY, GULF OF ALASKA, FISHERIES, ENVIRONMENTAL MANAGEMENT, ECOSYSTEMS, ECONOMIC EFFECTS, BIOLOGICAL EFFECTS, ALASKA , SOCIOECONOMIC EFFECTS, TANKERS, SAFETY
0666 " PIPELINES, OIL TRANSPORT, OIL TRANSFER, OIL INDUSTRY, EQUIPMENT, DRILLING , DETECTION, STORAGE, TANKERS, SPILL CONTAINMENT, SPILL REMOVAL, SPILL DISPOSAL
0670 " PETROCHEMICALS, EQUIPMENT, ECONOMICS, DISPOSAL , REFINERIES, WASTEWATER TREATMENT, SOLID WASTES
0679 " OIL SHALE, DEVELOPMENT , WASTEWATER TREATMENT, *RESARCH PROJECTS
R010 " HYDROCARBONS , DETECTION, BILGES, BACTERIA, WASTEWATERS, *ENZYME ELECTRODE
R027 " PERSONNEL TRAINING, CONTINGENCY PLANNING, SPILL RESPONSE, SPILL CLEANUP, POLLUTION PREVENTION
R029 " SEA SURFACE, USN, SHIPS, *AIR-SEA INTERFACE
R062 " MONITORING, HYDROCARBONS , REFINERIES, WASTEWATERS, WATER QUALITY, *THERMAL OIL RECOVERY
R064 " OIL SHALE, BIOLOGICAL TREATMENT, AROMATIC HYDROCARBONS, REFINING, WASTEWATERS
R065 " ILLINOIS, CONTAMINANTS, REFINING, WASTEWATER TREATMENT, *INDIANA
R067 " FILTRATION, WASTEWATERS, POLLUTION PREVENTION, REFINING, *MICELLAR FLOODING, *SULFONATES
0457 POLLUTION PREVENTION, OCEANS, LEGISLATION, INTERNATIONAL AGREEMENTS
0468 " POLLUTION CONTROL, OIL DISCHARGES, GOVERNMENT AGENCIES, TANKERS, UK
0471 " POLLUTION CONTROL, FOREIGN GOVERNMENTS, AUSTRALIA, *PROCEEDINGS
0472 " OIL SPILLS, ECONOMICS, COST ANALYSIS, TANKERS, SEGREGATED BALLAST
0476 " OIL-WATER SEPARATION, FILTRATION, EQUIPMENT, DESIGN-ENGINEERING, BALLAST , TANKERS
0478 " POLLUTION CONTROL, MARINE ENVIRONMENT, AUSTRALIA
0479 " OIL SLICKS, EQUIPMENT, DISPERSION, BIODEGRADATION, SPILL CONTAINMENT, SPILL CLEANUP, SHIPS, TANKERS, SOURCES, STATISTICS, SPREADING
0630 " OIL INDUSTRY, LAW ENFORCEMENT, EPA, CONTINGENCY PLANNING, PRODUCTION , REGULATIONS, *STRIPPER WELLS
0655 " PIPELINES, OIL SPILLS, LEGISLATION, GOVERNMENT AGENCIES, ENVIRONMENTAL PROTECTION, SAFETY, REGULATIONS
0659 " OIL TANKS, INLAND, EPA, CONTINGENCY PLANNING, COASTS, STORAGE, USN, REGULATIONS
0661 " LEGISLATION, TANKERS, ENVIRONMENTAL PROTECTION, ALASKA , SAFETY
0663 " LEGISLATION, COMPENSATION, SAFETY, US, TANKERS, REGULATIONS
0664 " LEGISLATION, GUIDELINES, SAFETY, REGULATIONS, TANKERS, US
0676 " ICE, SHIPS, RIVERS, *ACCIDENTS, *OHIO RIVER
R027 " POLLUTION CONTROL, PERSONNEL TRAINING, CONTINGENCY PLANNING, SPILL RESPONSE, SPILL CLEANUP
R063 " OIL TRANSFER, OIL DISCHARGES, TANKERS, SHIPS, SAN FRANCISCO BAY
R067 " POLLUTION CONTROL, FILTRATION, WASTEWATERS, REFINING, *MICELLAR FLOODING, *SULFONATES
0523 POLYCHAETES, MOLLUSKS, MARINE ORGANISMS, INTERTIDAL ZONE, BIOLOGICAL EFFECTS, BIOASSAY, UPTAKE
0473 PORTS , POLLUTION CONTROL, INDUSTRIES, GOVERNMENT AGENCIES, ESTUARIES, ENVIRONMENTAL PROTECTION, DISPOSAL , DEVELOPMENT , WASTEWATERS, REGULATIONS, US
0602 " MODELS, ENVIRONMENTAL EFFECTS, ALASKA , PREDICTIONS, TANKERS
0657 " OIL TRANSPORT, OIL TERMINALS, INDUSTRIES, GOVERNMENT AGENCIES, CONTINGENCY PLANNING, ALASKA , SPILL RESPONSE, SPILL CLEANUP, USCG, *PORT VALDEZ
0662 " LAW ENFORCEMENT, TANKERS, SHIPS, REGULATIONS, SAFETY, USCG, STATISTICS
0452 PREDICTIONS, OFFSHORE DEVELOPMENT, NORTH SEA, MOVEMENT, EKOFISK BLOWOUT, CONTINGENCY PLANNING, SPILL RESPONSE, SOURCES
0529 " OIL SPILLS, MODELS, COST ANALYSIS, BASELINE STUDIES, SOCIOECONOMIC EFFECTS
0577 " MICROORGANISMS, DISPERSANTS, CRUDE OIL, BIODEGRADATION, HYDROS
0594 " PHYSICAL EFFECTS, MOVEMENT, MODELS, DRIFT, SPREADING, SEA SURFACE, SPILL TRAJECTORIES
0596 " PACIFIC COAST, OIL TRANSPORT, OIL SPILLS, MODELS, COASTAL WATERS, CALIFORNIA, SHIPS, TANKERS
0598 " MOVEMENT, MODELS, GEORGES BANK, FISHERIES, SPILL RESPONSE, SPILL TRAJECTORIES
0600 " OIL SPILLS, MOVEMENT, MODELS, DRIFT, ARGO MERCHANT SPILL, SPILL TRAJECTORIES, SPREADING
0601 " PHYSICAL EFFECTS, MOVEMENT, MODELS, ESTUARIES, BEHAVIOR, SPREADING, *TIDAL SIMULATIONS
0602 " PORTS , MODELS, ENVIRONMENTAL EFFECTS, ALASKA , TANKERS
0603 " OIL SPILLS, MOVEMENT, MONITORING, MODELS, DRIFT, SPILL TRAJECTORIES
0605 " OIL SPILLS, MODELS, TANKERS, RISK ANALYSIS
0608 " OIL SPILLS, MOVEMENT, MODELS, GEORGES BANK, FISHERIES, FISH, FATE, DRIFT, BIOLOGICAL EFFECTS, BEHAVIOR, ATLANTIC OCEAN, SPREADING, *COD

0610 PREDICTIONS, PHYSICAL EFFECTS, MOVEMENT, GULF OF ALASKA, FATE, ANALYTICAL TECHNIQUES, SAMPLING
0611 " OIL SPILLS, MODELS, MISSISSIPPI RIVER, CONTINGENCY PLANNING, RIVERS, *RIVERSPILL MODEL
0612 " OIL SPILLS, MOVEMENT, MODELS, BEAUFORT SEA, ARCTIC, SPILL TRAJECTORIES, SEA SURFACE
R039 " OIL SPILLS, OCS, ICE, FATE, COASTS, BEAUFORT SEA, BASELINE STUDIES, ARCTIC, SEDIMENTS
R055 " OIL SPILLS, MOVEMENT, ICE, FATE, ARCTIC, *POOLING
R056 " OCEANS, MODELS, SPILL TRAJECTORIES, SEDIMENTS, *NEW ZEALAND, *COOK STRAIT
R057 " OIL SLICKS, MODELS, FATE, BEHAVIOR, SANTA BARBARA CHANNEL
R058 " OIL SHALE, MODELS, GROUNDWATER, CONTAMINATION
0630 PRODUCTION , POLLUTION PREVENTION, OIL INDUSTRY, LAW ENFORCEMENT, EPA, CONTINGENCY PLANNING, REGULATIONS, *STRIPPER WELLS
0641 " PIPELINES, OIL TRANSPORT, INDUSTRIES, ESTUARIES, DEVELOPMENT , COASTAL WATERS, ALASKA , POLLUTION CONTOL, TANKERS
0675 " PIPELINES, OIL TRANSPORT, OIL SPILLS, OIL SHALE, OFFSHORE DEVELOPMENT, EXPLORATION , STORAGE, REFINERIES, *ACCIDENTS
R054 " MOVEMENT, FATE, CONTAMINANTS, ALASKA , ADSORPTION, SOURCES, SEDIMENTS, *COOK INLET
0539 PUERTO RICO, ENVIRONMENTAL EFFECTS, ECOSYSTEMS, CORAL REEFS, COASTAL WATERS, VEGETATION, *RHIZOPHORA MANGLE, *VULNERABILITY
0540 " ONSHORE IMPACTS, MONITORING, INTERTIDAL ZONE, ENVIRONMENTAL EFFECTS, CHROMATOGRAPHY, BIOLOGICAL EFFECTS, BIODEGRADATION, SEDIMENTS, RESTORATION, TROPICAL REGIONS, RECOVERY
0669 PUGET SOUND, PETROLEUM PRODUCTS, CRUDE OIL, CHEMICAL ANALYSIS, REFINERIES, WASTEWATERS,DISPOSAL , WASHINGTON
R018 " DETECTION, CONTAMINANTS, CHEMICAL ANALYSIS, AROMATIC HYDROCARBONS, SEDIMENTS, WASHINGTON
R069 " NEW YORK, INFORMATION SYSTEMS, RESOURCE MANAGEMENT, STATISTICAL ANALYSIS, WASHINGTON, *MESA
0673 RECLAMATION, CRANKCASE OIL, CONSERVATION, WASTE OIL, RECYCLING, REUSE
0521 RECOVERY, OIL SPILLS, MORTALITY, METULA SPILL, INVERTEBRATES, INTERTIDAL ZONE, DETECTION, CHILE, BIOLOGICAL EFFECTS, STRAIT OF MAGELLAN
0534 " OIL SPILLS, ENVIRONMENTAL EFFECTS, ECOSYSTEMS, CONTINGENCY PLANNING, SPILL CLEANUP
0535 " PHYSICAL EFFECTS, OIL SPILLS, MOVEMENT, METULA SPILL, FATE, BEHAVIOR, SPILL CLEANUP, STRAIT OF MAGELLAN
0537 " OIL SPILLS, LEAKAGE, JAPAN, FUEL OIL, FISHERIES, RESTORATION, WATER QUALITY
0540 " PUERTO RICO, ONSHORE IMPACTS, MONITORING, INTERTIDAL ZONE, ENVIRONMENTAL EFFECTS, CHROMATOGRAPHY, BIOLOGICAL EFFECTS, BIODEGRADATION, SEDIMENTS, RESTORATION, TROPICAL REGIONS
0541 " OIL SPILLS, MARINE ORGANISMS, ENVIRONMENTAL EFFECTS, DISPERSANTS, BIOLOGICAL EFFECTS, AMOCO CADIZ SPILL, SPILL CLEANUP
0568 " ONSHORE IMPACTS, OIL SPILLS, METULA SPILL, INTERTIDAL ZONE, ENVIRONMENTAL EFFECTS, CHILE, BIOLOGICAL EFFECTS, SPILL CLEANUP, STRAIT OF MAGELLAN
R053 " MARINE ENVIRONMENT, HYDROCARBONS , DECOMPOSITION, BIODEGRADATION
0673 RECYCLING, RECLAMATION, CRANKCASE OIL, CONSERVATION, WASTE OIL, REUSE
0470 REFINERIES, POLLUTION CONTROL, OIL DISCHARGES, MONITORING, DETECTION, WASTEWATERS, *RADIOTRACER TECHNIQUES
0548 " PETROCHEMICALS, OIL TRANSPORT, NORTH CAROLINA, ENVIRONMENTAL EFFECTS, DEEPWATER PORTS, COST ANALYSIS, SOCIOECONOMIC EFFECTS, STORAGE
0633 " PETROCHEMICALS, OIL TRANSFER, INDUSTRIES, GOVERNMENT AGENCIES, ESTUARIES, ENVIRONMENTAL EFFECTS, COASTAL ZONE MANAGEMENT
0645 " PETROCHEMICALS, ONSHORE IMPACTS, OIL TRANSFER, OFFSHORE DEVELOPMENT, *ONSHORE FACILITIES
0669 " PUGET SOUND, PETROLEUM PRODUCTS, CRUDE OIL, CHEMICAL ANALYSIS, WASTEWATERS,DISPOSAL , WASHINGTON
0670 " POLLUTION CONTROL, PETROCHEMICALS, EQUIPMENT, ECONOMICS, DISPOSAL , WASTEWATER TREATMENT, SOLID WASTES
0675 " PRODUCTION , PIPELINES, OIL TRANSPORT, OIL SPILLS, OIL SHALE, OFFSHORE DEVELOPMENT, EXPLORATION , STORAGE, *ACCIDENTS
R062 " POLLUTION CONTROL, MONITORING, HYDROCARBONS , WASTEWATERS, WATER QUALITY, *THERMAL OIL RECOVERY
R066 " GC/MS, EPA, DOE, CHEMICAL ANALYSIS, ACTIVATED SLUDGE, WASTEWATER TREATMENT, *ACTIVATED CARBON
0648 REFINING, PETROLEUM PRODUCTS, OIL TRANSPORT, OFFSHORE PRODUCTION, OFFSHORE EXPLORATION, OCS, GULF OF MEXICO, ENVIRONMENTAL EFFECTS, *CONFERENCE
R064 " POLLUTION CONTROL, OIL SHALE, BIOLOGICAL TREATMENT, AROMATIC HYDROCARBONS, WASTEWATERS
R065 " POLLUTION CONTROL, ILLINOIS, CONTAMINANTS, WASTEWATER TREATMENT, *INDIANA
R067 " POLLUTION PREVENTION, POLLUTION CONTROL, FILTRATION, WASTEWATERS, *MICELLAR FLOODING, *SULFONATES
0458 REGULATIONS, OIL SPILLS, LEGISLATION, ECONOMIC EFFECTS, COST ANALYSIS, COMPENSATION, ALASKA , US
0461 " LIABILITY, LEGISLATION, INTERNATIONAL AGREEMENTS, ECONOMIC EFFECTS, US, TRANS-ALASKA PIPELINE, TANKERS
0464 " OCS, LEGISLATION, ENVIRONMENTAL MANAGEMENT, ALASKA

0465 REGULATIONS, OIL TRANSPORT, INTERNATIONAL CONVENTIONS, IMCO, FATE, BIOLOGICAL EFFECTS, TANKERS, SOURCES, *LONDON DUMPING CONVENTION
0466 " LEGISLATION, INTERNATIONAL CONVENTIONS, FOREIGN GOVERNMENTS, RESOURCE MANAGEMENT, *LAW OF THE SEA
0467 " POLLUTION CONTROL, LEGISLATION, JAPAN, GOVERNMENT AGENCIES, FOREIGN GOVERNMENTS, EQUIPMENT, CONTINGENCY PLANNING, SPILL CLEANUP
0473 " PORTS , POLLUTION CONTROL, INDUSTRIES, GOVERNMENT AGENCIES, ESTUARIES, ENVIRONMENTAL PROTECTION, DISPOSAL , DEVELOPMENT , WASTEWATERS, US
0474 " POLLUTION CONTROL, LEGISLATION, INDUSTRIES, ECONOMICS, WASTWATER TREATMENT, *MANAGEMENT , *HANDBOOK
0475 " LEGISLATION, LAW ENFORCEMENT, GOVERNMENT AGENCIES, FOREIGN GOVERNMENTS, EQUIPMENT, CONTINGENCY PLANNING, BLACK SEA, SPILL CLEANUP, USSR
0533 " POLLUTION CONTROL, LEGISLATION, JAPAN, FISHERIES, ENVIRONMENTAL EFFECTS, ECONOMIC EFFECTS
0558 " LIABILITY, LEGISLATION, INTERNATIONAL AGREEMENTS, INSURANCE, US GOVERNMENT
0629 " OFFSHORE DEVELOPMENT, OCS, MONITORING, ENVIRONMENTAL PROTECTION, DEVELOPMENT
0630 " PRODUCTION , POLLUTION PREVENTION, OIL INDUSTRY, LAW ENFORCEMENT, EPA, CONTINGENCY PLANNING, *STRIPPER WELLS
0644 " ONSHORE IMPACTS, OIL INDUSTRY, OFFSHORE DEVELOPMENT, OCS, FISHERIES, ENVIRONMENTAL EFFECTS, ATLANTIC OCEAN, SOCIOECONOMIC EFFECTS
0655 " POLLUTION PREVENTION, PIPELINES, OIL SPILLS, LEGISLATION, GOVERNMENT AGENCIES, ENVIRONMENTAL PROTECTION, SAFETY
0659 " POLLUTION PREVENTION, OIL TANKS, INLAND, EPA, CONTINGENCY PLANNING, COASTS, STORAGE, USN
0662 " PORTS , LAW ENFORCEMENT, TANKERS, SHIPS, SAFETY, USCG, STATISTICS
0663 " POLLUTION PREVENTION, LEGISLATION, COMPENSATION, SAFETY, US, TANKERS
0664 " POLLUTION PREVENTION, LEGISLATION, GUIDELINES, SAFETY, TANKERS, US
0665 " LAW ENFORCEMENT, ALASKA , USCG, TANKERS, SAFETY, US GOVERNMENT, *VESSEL TRAFFIC SERVICE
0480 RELEASE, HYDROCARBONS , AMPHIPODS, WSF, SEDIMENTS, UPTAKE, *NAPHTHALENES, *BIOMAGNIFICATION
0490 " METABOLISM, MARINE MAMMALS, HYDROCARBONS , CRUDE OIL, CONTAMINATION, ABSORPTION, UPTAKE, *PHOCA HISPIDA
R030 " PACIFIC COAST, MARINE ORGANISMS, HYDROCARBONS , GROWTH, ECOSYSTEMS, CRUDE OIL, CONCENTRATIONS, CHRONIC EFFECTS, BIOLOGICAL EFFECTS, UPTAKE, SEDIMENTS
0349 REMOTE SENSING, POLLUTION CONTROL, EQUIPMENT, COASTAL WATERS, SURVEILLANCE, TANKERS, SHIPS, SWEDEN
0350 " POLLUTION CONTROL, MONITORING, MODELS, GOVERNMENT AGENCIES, SURVEILLANCE, *NASA, *SATELLITES
0351 " OIL SLICKS, OFFSHORE DEVELOPMENT, MONITORING, COASTAL WATERS, ARCTIC, TANKERS, SURVEILLANCE, SOURCES, *SURSAT SATELLITE SYSTEM
0352 " OIL SLICKS, MOVEMENT, MODELS, ESTUARIES, DRIFT, DELAWARE BAY, SPREADING, SURVEILLANCE, *ESTUARINE FRONTS
0353 " PLATFORMS, OIL SLICKS, NATURAL SEEPAGE, EQUIPMENT, DETECTION, CALIFORNIA, SURVEILLANCE, USCG, SANTA BARBARA CHANNEL, *RADAR SYSTEMS
0354 " OIL DISCHARGES, ENVIRONMENTAL DETERIORATION, DETECTION, SOURCES, WATER QUALITY, *HONG KONG
0355 " MOVEMENT, MONITORING, HYDROCARBONS , ANALYTICAL TECHNIQUES, SURVEILLANCE, SPILL TRAJECTORIES, SEA SURFACE
0356 " OIL SPILLS, EQUIPMENT, BEAUFORT SEA, SURVEILLANCE
0357 " POLLUTION CONTROL, MONITORING, LAW ENFORCEMENT, EQUIPMENT, SURVEILLANCE, USCG, TANKERS, SHIPS, *AIREYE SYSTEM
R015 " OIL SPILLS, MONITORING, DETECTION, *RADAR
R017 " OIL SPILLS, MONITORING, DETECTION, CRUDE OIL, ANALYTICAL TECHNIQUES, SURVEILLANCE, WEATHERING, *AGING
R059 " OFFSHORE DEVELOPMENT, MOVEMENT, MODELS, ICE, BEAUFORT SEA, SPILL TRAJECTORIES, RISK ANALYSIS, *RADAR
0488 REPRODUCTION, HYDROCARBONS , GROWTH, CHRONIC EFFECTS, BIRDS, BIOLOGICAL EFFECTS, ACUTE EFFECTS, TOXICITY
0489 " MORTALITY, METABOLISM, GROWTH, CRUSTACEANS, CRUDE OIL, CONCENTRATIONS, BIOLOGICAL EFFECTS, WSF, *CRANGON CRANGON
0495 " FISH, CRUDE OIL, BIOLOGICAL EFFECTS, BARENTS SEA, WSF, *HATCHING
0497 " HYDROCARBONS , GROWTH, FUEL OIL, FISH, DEVELOPMENT , CONTAMINATION, BIOLOGICAL EFFECTS, SUBLETHAL EFFECTS, *PSEUDOPLEURONECTES AMERICANUS
R033 " OIL SPILLS, FRESHWATER, ECOSYSTEMS, BIOMASS, BIOLOGICAL EFFECTS, ARCTIC, ALGAE, ALASKA , ZOOPLANKTON, UPTAKE, *TUNDRA PONDS
R037 " MONITORING, MARINE ENVIRONMENT, GROWTH, FISH, ENVIRONMENTAL EFFECTS, BIOLOGICAL EFFECTS, BEHAVIOR, TOXICITY
0451 RESOURCE MANAGEMENT, GOVERNMENT AGENCIES, EPA, SPILL RESPONSE, *US FISH AND WILDLIFE SERVICE
0466 " REGULATIONS, LEGISLATION, INTERNATIONAL CONVENTIONS, FOREIGN GOVERNMENTS, *LAW OF THE SEA
0626 " OIL SPILLS, ENVIRONMENTAL EFFECTS, ECONOMICS, COST ANALYSIS, COASTAL ZONE MANAGEMENT
0636 " ONSHORE IMPACTS, OFFSHORE DEVELOPMENT, OCS, COASTAL ZONE MANAGEMENT

0637 RESOURCE MANAGEMENT, PIPELINES, ONSHORE IMPACTS, OIL SPILLS, OCS, GOVERNMENT AGENCIES, GEORGIA, ENVIRONMENTAL EFFECTS, DEVELOPMENT
0647 " OIL INDUSTRY, OFFSHORE DEVELOPMENT, GEORGES BANK, FISHERIES, ENVIRONMENTAL EFFECTS
0651 " EXPLORATION , ENVIRONMENTAL PROTECTION, ENVIRONMENTAL DETERIORATION, DEVELOPMENT , WILDLIFE
0678 " OIL TRANSPORT, ENVIRONMENTAL PROTECTION, ECOSYSTEMS, COASTAL ZONE MANAGEMENT, ALASKA , *PUBLIC PARTICIPATION
R069 " PUGET SOUND, NEW YORK, INFORMATION SYSTEMS, STATISTICAL ANALYSIS, WASHINGTON, *MESA
0426 RESTORATION, MARSHES, MARINE MAMMALS, ENVIRONMENTAL EFFECTS, BEACHES, SPILL CLEANUP, SPILL RESPONSE
0433 " PIPELINES, INLAND, ICE, CONTINGENCY PLANNING, ALASKA , SPILL RESPONSE, TRANS-ALASKA PIPELINE, SPILL CONTAINMENT, SPILL CLEANUP
0537 " RECOVERY, OIL SPILLS, LEAKAGE, JAPAN, FUEL OIL, FISHERIES, WATER QUALITY
0540 " RECOVERY, PUERTO RICO, ONSHORE IMPACTS, MONITORING, INTERTIDAL ZONE, ENVIRONMENTAL EFFECTS, CHROMATOGRAPHY, BIOLOGICAL EFFECTS, BIODEGRADATION, SEDIMENTS, TROPICAL REGIONS
0667 REUSE, PATENT, OIL-WATER SEPARATION, GRAVITY SEPARATION, WASTEWATER TREATMENT, SLUDGE
0673 " RECYCLING, RECLAMATION, CRANKCASE OIL, CONSERVATION, WASTE OIL
0469 RISK ANALYSIS, MODELS, EQUIPMENT, CONTINGENCY PLANNING, BOOMS, SPILL RESPONSE, SKIMMERS, *COMPUTER SIMULATIONS
0547 " PERSIAN GULF, OIL INDUSTRY, KUWAIT, ENVIRONMENTAL PROTECTION, ENVIRONMENTAL MANAGEMENT, DEVELOPMENT , BASELINE STUDIES, *UNEP
0597 " OIL SPILLS, MODELS, FATE, ENVIRONMENTAL EFFECTS, DISPERSANTS, BEHAVIOR, SPILL RESPONSE, SPILL CLEANUP, SOURCE IDENTIFICATION
0605 " PREDICTIONS, OIL SPILLS, MODELS, TANKERS
R040 " OIL SPILLS, OFFSHORE DEVELOPMENT, OCS, MODELS, ENVIRONMENTAL EFFECTS, ATLANTIC COAST
R059 " REMOTE SENSING, OFFSHORE DEVELOPMENT, MOVEMENT, MODELS, ICE, BEAUFORT SEA, SPILL TRAJECTORIES, *RADAR
0387 RIVERS, BOOMS, SPILL CONTAINMENT, DESIGN-ENGINEERIGN, *DEFLECTORS
0395 " ICE, EQUIPMENT, SPILL CONTAINMENT, SPILL REMOVAL, SKIMMERS
0396 " ICE, DESIGN-ENGINEERING, BOOMS, SPILL CONTAINMENT, USCG, *CANADIAN COAST GUARD
0397 " ICE, DESIGN-ENGINEERING, SPILL CONTAINMENT, SPILL REMOVAL
0399 " INLAND, ICE, EQUIPMENT, SPILL CLEANUP, SPILL CONTAINMENT, SORBENTS, *LAND SPILLS
0431 " POLLUTION CONTROL, OIL REMOVAL, MISSISSIPPI RIVER, ICE, EQUIPMENT, SPILL RESPONSE, SHIPS, USCG
0611 " PREDICTIONS, OIL SPILLS, MODELS, MISSISSIPPI RIVER, CONTINGENCY PLANNING, *RIVERSPILL MODEL
0676 " POLLUTION PREVENTION, ICE, SHIPS, *ACCIDENTS, *OHIO RIVER
R050 " PAH, MICROORGANISMS, BIODEGRADATION, BACTERIA, AROMATIC HYDROCARBONS, LAKE S, *GENETIC ENGINEERING, *PSUEDOMONAS
0643 SAFETY, POLLUTION CONTROL, OIL INDUSTRY, OCS, LIABILITY, GULF OF ALASKA, FISHERIES, ENVIRONMENTAL MANAGEMENT, ECOSYSTEMS, ECONOMIC EFFECTS, BIOLOGICAL EFFECTS, ALASKA , SOCIOECONOMIC EFFECTS, TANKERS
0655 " REGULATIONS, POLLUTION PREVENTION, PIPELINES, OIL SPILLS, LEGISLATION, GOVERNMENT AGENCIES, ENVIRONMENTAL PROTECTION
0661 " POLLUTION PREVENTION, TANKERS, LEGISLATION, ENVIRONMENTAL PROTECTION, ALASKA
0662 " REGULATIONS, PORTS , LAW ENFORCEMENT, TANKERS, SHIPS, USCG, STATISTICS
0663 " REGULATIONS, POLLUTION PREVENTION, LEGISLATION, COMPENSATION, US, TANKERS
0664 " REGULATIONS, POLLUTION PREVENTION, LEGISLATION, GUIDELINES, TANKERS, US
0665 " REGULATIONS, LAW ENFORCEMENT, ALASKA , USCG, TANKERS, US GOVERNMENT, *VESSEL TRAFFIC SERVICE
0358 SAMPLING, HYDROCARBONS , DISPERSION, DISPERSANTS, CHEMICAL ANALYSIS
0361 " FISH, CONTAMINATION, CHEMICAL ANALYSIS, *SALMON, *SAITHE, *OIL TAINTING
0364 " MONITORING, EQUIPMENT, CHEMICAL ANALYSIS, BIBLIOGRAPHIES, ANALYTICAL TECHNIQUES, SURVEILLANCE, SPECTROMETRY
0366 " OIL SPILLS, HYDROCARBONS , EVAPORATION, DISPERSANTS, CHEMICAL ANALYSIS, *OIL SPILL VAPORS
0367 " NORTH SEA, HYDROCARBONS , DISTRIBUTION, DETECTION, CONCENTRATIONS, CHROMATOGRAPHY, CHEMICAL ANALYSIS
0368 " OCS, NEW YORK, HYDROCARBONS , HARBORS, DISTRIBUTION, CONCENTRATIONS, SEDIMENTS
0370 " PAH, OXIDATION, MARINE ORGANISMS, GC/MS, CHEMICAL ANALYSIS, AROMATIC HYDROCARBONS, AMOCO CADIZ SPILL, UPTAKE, SEDIMENTS, *MOUSSE
0374 " MODELS, HYDROCARBONS , CONCENTRATIONS, COASTAL WATERS, BERMUDA, SEDIMENTS, TROPICAL REGIONS
0376 " ONSHORE IMPACTS, OIL SPILLS, METULA SPILL, GC/MS, CONCENTRATIONS, CHILE, CHEMICAL ANALYSIS, BIOLOGICAL EFFECTS, SEDIMENTS, WEATHERING, STRAIT OF MAGELLAN
0378 " NATURAL SEEPAGE, CHEMICAL ANALYSIS, ANALYTICAL TECHNIQUES, SOURCE IDENTIFICATION, WEATHERING, SPECTROSCOPY
0379 " HYDROCARBONS , CHROMATOGRAPHY, CHEMICAL ANALYSIS, ANALYTICAL TECHNIQUES, SOURCE IDENTIFICATION, SPECTROSCOPY, *IR, *UV, *FLUORESCENCE
0512 " OCS, INVERTEBRATES, HYDROCARBONS , CONTAMINATION, CALIFORNIA, BENTHOS, BASELINE STUDIES
0525 " NORTH SEA, MOLLUSKS, HYDROCARBONS , FISH, EKOFISK BLOWOUT, CONTAMINATION, BIOLOGICAL EFFECTS, BENTHOS

0545 SAMPLING, POLLUTION CONTROL, MARINE ORGANISMS, MARINE ENVIRONMENT, GUIDELINES, BASELINE STUDIES, ANALYTICAL TECHNIQUES
0571 " ANALYTICAL TECHNIQUES, TOXICITY, SUBLETHAL EFFECTS, *LABORATORY DATA ANALYSIS, *FIELD APPLICATIONS
0591 " ICE, HYDROCARBONS , FUEL OIL, EVAPORATION, CHROMATOGRAPHY, CHEMICAL ANALYSIS, BUZZARDS BAY, BOUCHARD 65 SPILL, WEATHERING, SHIPS
0610 " PREDICTIONS, PHYSICAL EFFECTS, MOVEMENT, GULF OF ALASKA, FATE, ANALYTICAL TECHNIQUES
R047 " HYDROCARBONS , DETECTION, CONCENTRATIONS, CARCINOGENS, BIOLOGICAL EFFECTS, ANALYTICAL TECHNIQUES, TOXICITY
R063 SAN FRANCISCO BAY, POLLUTION PREVENTION, OIL TRANSFER, OIL DISCHARGES, TANKERS, SHIPS
0410 SANSINENA SPILL, HARBORS, EQUIPMENT, CALIFORNIA, SPILL CLEANUP, SPILL RESPONSE, TANKERS
0424 " HARBORS, EQUIPMENT, CALIFORNIA, SPILL CLEANUP, SPILL RESPONSE, TANKERS, USCG
0619 " INCINERATION, HARBORS, FUEL OIL, FATE, DISTRIBUTION, CHEMICAL EFFECTS, CALIFORNIA, BENTHOS, SEDIMENTS, SEDIMENTATION
0622 " INCINERATION, HARBORS, FUEL OIL, FATE, CALIFORNIA, BIOLOGICAL EFFECTS, WATER QUALITY
0347 SANTA BARBARA CHANNEL, OCS, NATURAL SEEPAGE, HYDROCARBONS , FISH, DISTRIBUTION, CHROMATOGRAPHY, CHEMICAL ANALYSIS, CALIFORNIA, BIOINDICATORS, BENTHOS, SEDIMENTS
0353 " REMOTE SENSING, PLATFORMS, OIL SLICKS, NATURAL SEEPAGE, EQUIPMENT, DETECTION, CALIFORNIA, SURVEILLANCE, USCG, *RADAR SYSTEMS
0518 " NATURAL SEEPAGE, MARINE ORGANISMS, CRUDE OIL, BIOLOGICAL EFFECTS, BENTHOS, SEDIMENTS
R057 " PREDICTIONS, OIL SLICKS, MODELS, FATE, BEHAVIOR
0355 SEA SURFACE, REMOTE SENSING, MOVEMENT, MONITORING, HYDROCARBONS , ANALYTICAL TECHNIQUES, SURVEILLANCE, SPILL TRAJECTORIES
0360 " PAH, MARINE ORGANISMS, HYDROCARBONS , GEORGES BANK, GC/MS, CHEMICAL ANALYSIS, BIOGENIC HYDROCARBONS, BENTHOS, ARGO MERCHANT SPILL, WSF, SEDIMENTS, ZOOPLANKTON, SOURCES, TANKERS
0527 " PHYSICAL EFFECTS, OIL SLICKS, MODELS, ENVIRONMENTAL EFFECTS, DISPERSION, *WIND WAVES
0583 " NORTH SEA, FATE, EKOFISK BLOWOUT, DRIFT, SPREADING, WEATHERING, STATISTICAL ANLYSIS
0594 " PREDICTIONS, PHYSICAL EFFECTS, MOVEMENT, MODELS, DRIFT, SPREADING, SPILL TRAJECTORIES
0599 " MOVEMENT, DRIFT, SPREADING, SPILL TRAJECTORIES
0612 " PREDICTIONS, OIL SPILLS, MOVEMENT, MODELS, BEAUFORT SEA, ARCTIC, SPILL TRAJECTORIES
R029 " POLLUTION CONTROL, USN, SHIPS, *AIR-SEA INTERFACE
0491 SEAWATER, PLANTS, OIL SPILLS, MICROORGANISMS, METABOLISM, FRESHWATER, BIOLOGICAL EFFECTS, BIBLIOGRAPHIES, ANIMALS
0677 " CONTAMINANTS, COASTAL WATERS, BACTERIA, *ADRIATIC SEA, *, *VALORIZATION
0616 SEDIMENTATION, MARINE ENVIRONMENT, HYDROCARBONS , FUEL OIL, FATE, EVAPORATION, CHROMATOGRAPHY, BIODEGRADATION, SOLUTION, WEATHERING, ANALYTICAL TECHNQIUES
0619 " SANSINENA SPILL, INCINERATION, HARBORS, FUEL OIL, FATE, DISTRIBUTION, CHEMICAL EFFECTS, CALIFORNIA, BENTHOS, SEDIMENTS
0347 SEDIMENTS, SANTA BARBARA CHANNEL, OCS, NATURAL SEEPAGE, HYDROCARBONS , FISH, DISTRIBUTION, CHROMATOGRAPHY, CHEMICAL ANALYSIS, CALIFORNIA, BIOINDICATORS, BENTHOS
0360 " SEA SURFACE, PAH, MARINE ORGANISMS, HYDROCARBONS , GEORGES BANK, GC/MS, CHEMICAL ANALYSIS, BIOGENIC HYDROCARBONS, BENTHOS, ARGO MERCHANT SPILL, WSF, ZOOPLANKTON, SOURCES, TANKERS
0368 " SAMPLING, OCS, NEW YORK, HYDROCARBONS , HARBORS, DISTRIBUTION, CONCENTRATIONS
0370 " SAMPLING, PAH, OXIDATION, MARINE ORGANISMS, GC/MS, CHEMICAL ANALYSIS, AROMATIC HYDROCARBONS, AMOCO CADIZ SPILL, UPTAKE, *MOUSSE
0374 " SAMPLING, MODELS, HYDROCARBONS , CONCENTRATIONS, COASTAL WATERS, BERMUDA, TROPICAL REGIONS
0376 " SAMPLING, ONSHORE IMPACTS, OIL SPILLS, METULA SPILL, GC/MS, CONCENTRATIONS, CHILE, CHEMICAL ANALYSIS, BIOLOGICAL EFFECTS, WEATHERING, STRAIT OF MAGELLAN
0406 " FATE, ENVIRONMENTAL EFFECTS, DISPERSANTS, CRUDE OIL, BRAZIL, BEACHES, SPILL CLEANUP, *BRAZILIAN MARINA SPILL
0480 " RELEASE, HYDROCARBONS , AMPHIPODS, WSF, UPTAKE, *NAPHTHALENES, *BIOMAGNIFICATION
0481 " MARINE ORGANISMS, INVERTEBRATES, HYDROCARBONS , CRUDE OIL, CHRONIC EFFECTS, BIODEGRADATION, BENTHOS, UPTAKE
0483 " NORWAY, MARINE ORGANISMS, MARINE ENVIRONMENT, HYDROCARBONS , CHRONIC EFFECTS, AROMATIC HYDROCARBONS
0485 " MORTALITY, INVERTEBRATES, CRUDE OIL, BENTHOS, ARCTIC, AMPHIPODS, ACUTE EFFECTS, TOXICITY, SUBLETHAL EFFECTS
0518 " SANTA BARBARA CHANNEL, NATURAL SEEPAGE, MARINE ORGANISMS, CRUDE OIL, BIOLOGICAL EFFECTS, BENTHOS
0540 " RESTORATION, RECOVERY, PUERTO RICO, ONSHORE IMPACTS, MONITORING, INTERTIDAL ZONE, ENVIRONMENTAL EFFECTS, CHROMATOGRAPHY, BIOLOGICAL EFFECTS, BIODEGRADATION, TROPICAL REGIONS
0573 " ICE, FUEL OIL, FLORIDA SPILL, FATE, BUZZARDS BAY
0586 " FRANCE, FATE, DISTRIBUTION, CONCENTRATIONS, BEHAVIOR, BAYS, AMOCO CADIZ SPILL
0587 " PHYSICAL EFFECTS, FRANCE, FATE, ESTUARIES, COASTS, BEHAVIOR, BEACHES, AMOCO CADIZ SPILL, SHORELINES, *COASTAL PROCESSES, *VULNERABILITY INDEX
0590 " FUEL OIL, DISPERSANTS, CRUDE OIL, BEHAVIOR, BEACHES, SHORELINES

0593 SEDIMENTS, HYDROCARBONS , FATE, CHEMICAL ANALYSIS, BEACHES, *ARROW SPILL
0604 " MOVEMENT, MODELS, HYDROCARBONS , SUBARCTIC REGIONS
0618 " NORTH SEA, HYDROCARBONS , GC/MS, EKOFISK BLOWOUT, CONTAMINATION, CHEMICAL ANALYSIS, BENTHOS
0619 " SEDIMENTATION, SANSINENA SPILL, INCINERATION, HARBORS, FUEL OIL, FATE, DISTRIBUTION, CHEMICAL EFFECTS, CALIFORNIA, BENTHOS
0623 " NATURAL SEEPAGE, MARINE ORGANISMS, INTERTIDAL ZONE, FATE, DISTRIBUTION, CALIFORNIA, BIOLOGICAL EFFECTS, BEACHES, TAR, SANTA BARBARA CHANNEL
R018 " PUGET SOUND, DETECTION, CONTAMINANTS, CHEMICAL ANALYSIS, AROMATIC HYDROCARBONS, WASHINGTON
R019 " MARINE ENVIRONMENT, HYDROCARBONS , GC/MS, CHROMATOGRAPHY, ANALYTICAL TECHNIQUES
R021 " OIL DISCHARGES, ESTUARIES, DELAWARE, SOURCE IDENTIFICATION, *PHENOLIC COMPOUNDS, *URBAN RUNOFF
R030 " RELEASE, PACIFIC COAST, MARINE ORGANISMS, HYDROCARBONS , GROWTH, ECOSYSTEMS, CRUDE OIL, CONCENTRATIONS, CHRONIC EFFECTS, BIOLOGICAL EFFECTS, UPTAKE
R039 " PREDICTIONS, OIL SPILLS, OCS, ICE, FATE, COASTS, BEAUFORT SEA, BASELINE STUDIES, ARCTIC
R052 " MICROORGANISMS, MARINE ENVIRONMENT, ESTUARIES, CRUDE OIL, BIODEGRADATION, BACTERIA
R054 " PRODUCTION , MOVEMENT, FATE, CONTAMINANTS, ALASKA , ADSORPTION, SOURCES, *COOK INLET
R056 " PREDICTIONS, OCEANS, MODELS, SPILL TRAJECTORIES, *NEW ZEALAND, *COOK STRAIT
0472 SEGREGATED BALLAST, POLLUTION PREVENTION, OIL SPILLS, ECONOMICS, COST ANALYSIS, TANKERS
0349 SHIPS, REMOTE SENSING, POLLUTION CONTROL, EQUIPMENT, COASTAL WATERS, SURVEILLANCE, TANKERS, SWEDEN
0357 " REMOTE SENSING, POLLUTION CONTROL, MONITORING, LAW ENFORCEMENT, EQUIPMENT, SURVEILLANCE, USCG, TANKERS, *AIREYE SYSTEM
0382 " PATENT, OIL TRANSFER, EQUIPMENT, DESIGN-ENGINEERING, SPILL CONTAINMENT, SPILL REMOVAL, *HYDRO-CARPET
0384 " PATENT, EQUIPMENT, DESIGN-ENGINEERING, BOOMS, SPILL CONTAINMENT
0393 " POLLUTION CONTROL, PATENT, LEAKAGE, SPILL CONTAINMENT, *CRYOTHERMAL METHOD
0415 " EQUIPMENT, DESIGN-ENGINEERING, BOOMS, SPILL CLEANUP, SKIMMERS, *FIELD TESTS, *AIR CUSHION VEHICLES
0416 " FUEL OIL, SPILL CLEANUP, SHORELINES, ST. LAWRENCE RIVER, *NEPCO 140 SPILL
0431 " RIVERS, POLLUTION CONTROL, OIL REMOVAL, MISSISSIPPI RIVER, ICE, EQUIPMENT, SPILL RESPONSE, USCG
0438 " EQUIPMENT, DISPERSANTS, DESIGN-ENGINEERING, CANADA, SPILL RESPONSE, *CANADIAN COAST GUARD
0479 " POLLUTION PREVENTION, OIL SLICKS, EQUIPMENT, DISPERSION, BIODEGRADATION, SPILL CONTAINMENT, SPILL CLEANUP, TANKERS, SOURCES, STATISTICS, SPREADING
0482 " INVERTEBRATES, INTERTIDAL ZONE, FUEL OIL, CHESAPEAKE BAY, BIOLOGICAL EFFECTS, BENTHOS, *BARGE STC-101 SPILL
0532 " EPA, ENVIRONMENTAL EFFECTS, ECONOMIC EFFECTS, COMPENSATION, SPILL CLEANUP, ST. LAWRENCE RIVER, *NEPCO 140 SPILL
0550 " PHYTOPLANKTON, OIL TRANSFER, DELAWARE BAY, BENTHOS, BASELINE STUDIES, ZOOPLANKTON
0560 " MARSHES, FISH, ENVIRONMENTAL EFFECTS, BAYS, WILDLIFE, SPILL CLEANUP, ST. LAWRENCE RIVER, *NEPCO 140 SPILL
0561 " OIL SPILLS, MICROORGANISMS, MARINE ORGANISMS, LEGISLATION, EKOFISK BLOWOUT, ECOSYSTEMS, BIOLOGICAL EFFECTS, ARGO MERCHANT SPILL, TANKERS, WILDLIFE, SOCIOECONOMIC EFFECTS, TOXICITY
0591 " SAMPLING, ICE, HYDROCARBONS , FUEL OIL, EVAPORATION, CHROMATOGRAPHY, CHEMICAL ANALYSIS, BUZZARDS BAY, BOUCHARD 65 SPILL, WEATHERING
0596 " PREDICTIONS, PACIFIC COAST, OIL TRANSPORT, OIL SPILLS, MODELS, COASTAL WATERS, CALIFORNIA, TANKERS
0662 " SAFETY, REGULATIONS, PORTS , LAW ENFORCEMENT, TANKERS, USCG, STATISTICS
0676 " RIVERS, POLLUTION PREVENTION, ICE, *ACCIDENTS, *OHIO RIVER
R029 " SEA SURFACE, POLLUTION CONTROL, USN, *AIR-SEA INTERFACE
R063 " SAN FRANCISCO BAY, POLLUTION PREVENTION, OIL TRANSFER, OIL DISCHARGES, TANKERS
0402 SHORELINES, HARBORS, FRANCE, ESTUARIES, COASTS, BEACHES, AMOCO CADIZ SPILL, SPILL RESPONSE, SPILL CLEANUP, SPILL DISPOSAL
0416 " SHIPS, FUEL OIL, SPILL CLEANUP, ST. LAWRENCE RIVER, *NEPCO 140 SPILL
0425 " INTERTIDAL ZONE, EQUIPMENT, ENVIRONMENTAL EFFECTS, ECONOMICS, DISPERSANTS, BEACHES, SPILL CLEANUP
0455 " OCEANS, EQUIPMENT, DISPERSANTS, CONTINGENCY PLANNING, SPILL RESPONSE, SPILL CLEANUP, SPREADING
0587 " SEDIMENTS, PHYSICAL EFFECTS, FRANCE, FATE, ESTUARIES, COASTS, BEHAVIOR, BEACHES, AMOCO CADIZ SPILL, *COASTAL PROCESSES, *VULNERABILITY INDEX
0590 " SEDIMENTS, FUEL OIL, DISPERSANTS, CRUDE OIL, BEHAVIOR, BEACHES
0395 SKIMMERS, RIVERS, ICE, EQUIPMENT, SPILL CONTAINMENT, SPILL REMOVAL
0407 " EQUIPMENT, DESIGN-ENGINEERING, SPILL CLEANUP, *CANADIAN COAST GUARD, *PERFORMANCE TESTING
0409 " PATENT, FLOTATION, EQUIPMENT, DESIGN-ENGINEERING, SPILL CLEANUP
0413 " EQUIPMENT, EPA, DESIGN-ENGINEERING, BOOMS, SPILL CLEANUP, USCG, *PERFORMANCE TESTING, *OHMSETT FACILITY
0415 " SHIPS, EQUIPMENT, DESIGN-ENGINEERING, BOOMS, SPILL CLEANUP, *FIELD TESTS, *AIR CUSHION VEHICLES

0417 SKIMMERS, PATENT, EQUIPMENT, DESIGN-ENGINEERING, SPILL CLEANUP
0418 " PATENT, EQUIPMENT, DESIGN-ENGINEERING, SPILL CLEANUP
0419 " INCINERATION, ICE, FUEL OIL, EQUIPMENT, BUZZARDS BAY, BOUCHARD 65 SPILL, BOOMS, SPILL CLEANUP
0420 " EQUIPMENT, EPA, DESIGN-ENGINEERING, SPILL CLEANUP, *PERFORMANCE TESTING, *OHMSETT FACILITY
0422 " OIL SLICKS, DISPERSANTS, CALIFORNIA, API, SPILL CLEANUP, *PETROLEUM CONTINGENCY ORGANIZATION, *FIELD TESTS
0456 " LOUISIANA, EQUIPMENT, CONTINGENCY PLANNING, BOOMS, SPILL RESPONSE, SPILL CLEANUP, STRATEGIC PETROLEUM RESERVE, STORAGE
0469 " RISK ANALYSIS, MODELS, EQUIPMENT, CONTINGENCY PLANNING, BOOMS, SPILL RESPONSE, *COMPUTER SIMULATIONS
R024 " EQUIPMENT, EPA, DOE, BOOMS, SPILL CLEANUP, *PERFORMANCE TESTING, *OHMSETT FACILITY
0667 SLUDGE , REUSE, PATENT, OIL-WATER SEPARATION, GRAVITY SEPARATION, WASTEWATER TREATMENT
0671 " LAND FARMING, DISPOSAL , BIODEGRADATION, WASTE OIL
0530 SOCIAL EFFECTS, OIL SPILLS, ENVIRONMENTAL EFFECTS, ECONOMIC EFFECTS, COST ANALYSIS
0529 SOCIOECONOMIC EFFECTS, PREDICTIONS, OIL SPILLS, MODELS, COST ANALYSIS, BASELINE STUDIES
0531 " OIL FIELDS, OFFSHORE DEVELOPMENT, OCS, NORTH SEA, GULF OF ALASKA, FISHERIES
0546 " ONSHORE IMPACTS, OCS, MISSISSIPPI, GULF OF MEXICO, ENVIRONMENTAL EFFECTS, EIS, DEVELOPMENT
0548 " REFINERIES, PETROCHEMICALS, OIL TRANSPORT, NORTH CAROLINA, ENVIRONMENTAL EFFECTS, DEEPWATER PORTS, COST ANALYSIS, STORAGE
0549 " ONSHORE IMPACTS, OIL-GAS LEASING, OFFSHORE DEVELOPMENT, OCS, ENVIRONMENTAL EFFECTS, BIBLIOGRAPHIES, TEXAS
0561 " SHIPS, OIL SPILLS, MICROORGANISMS, MARINE ORGANISMS, LEGISLATION, EKOFISK BLOWOUT, ECOSYSTEMS, BIOLOGICAL EFFECTS, ARGO MERCHANT SPILL, TANKERS, WILDLIFE, TOXICITY
0625 " ONSHORE IMPACTS, OIL-GAS LEASING, OFFSHORE DEVELOPMENT, OCS, NORTH SEA, ECONOMICS, BIBLIOGRAPHIES
0635 " ONSHORE IMPACTS, OIL-GAS LEASING, OFFSHORE DEVELOPMENT, OCS, LOUISIANA, ENVIRONMENTAL EFFECTS, COASTAL ZONE MANAGEMENT
0640 " PHYSICAL EFFECTS, OIL SPILLS, OFFSHORE DEVELOPMENT, OCS, NORTH SEA, MICROORGANISMS, FISHERIES, FISH, ENVIRONMENTAL EFFECTS, BIOLOGICAL EFFECTS, BASELINE STUDIES, ARCTIC
0642 " ONSHORE IMPACTS, OIL-GAS LEASING, OFFSHORE DEVELOPMENT, OCS, FISHERIES, COMPENSATION, COASTAL ZONE MANAGEMENT, COASTAL WATERS
0643 " SAFETY, POLLUTION CONTROL, OIL INDUSTRY, OCS, LIABILITY, GULF OF ALASKA, FISHERIES, ENVIRONMENTAL MANAGEMENT, ECOSYSTEMS, ECONOMIC EFFECTS, BIOLOGICAL EFFECTS, ALASKA , TANKERS
0644 " REGULATIONS, ONSHORE IMPACTS, OIL INDUSTRY, OFFSHORE DEVELOPMENT, OCS, FISHERIES, ENVIRONMENTAL EFFECTS, ATLANTIC OCEAN
0650 " OFFSHORE DEVELOPMENT, OCS, LOUISIANA, GULF OF MEXICO, ENVIRONMENTAL EFFECTS
0581 SOIL, MODELS, HYDROCARBONS , GROUNDWATER, EMULSIONS, CHEMICAL ANALYSIS, BIODEGRADATION, RESPIRATION
0670 SOLID WASTES, REFINERIES, POLLUTION CONTROL, PETROCHEMICALS, EQUIPMENT, ECONOMICS, DISPOSAL , WASTEWATER TREATMENT
0493 SOLUBILITY, HYDROCARBONS , BIOLOGICAL EFFECTS, ALGAE, TOXICITY, *CELL MEMBRANE
0616 SOLUTION, SEDIMENTATION, MARINE ENVIRONMENT, HYDROCARBONS , FUEL OIL, FATE, EVAPORATION, CHROMATOGRAPHY, BIODEGRADATION, WEATHERING, ANALYTICAL TECHNQIUES
0399 SORBENTS, RIVERS, INLAND, ICE, EQUIPMENT, SPILL CLEANUP, SPILL CONTAINMENT, *LAND SPILLS
0404 " EQUIPMENT, EMULSIONS, DISPERSANTS, BIODEGRADATION, AMOCO CADIZ SPILL, SPILL CLEANUP, SPILL REMOVAL, *CHEMICAL AGENTS
0672 " PLATFORMS, PATENT, OIL-WATER SEPARATION, ABSORPTION, *SORBENT ENDLESS CORD
R022 " EPA, BOOMS, SPILL CONTAINMENT, *PERFORMANCE TESTING, *OHMSETT FACILITY
0345 SOURCE IDENTIFICATION, MICROORGANISMS, DETECTION, CONTAMINATION, CONCENTRATIONS, BIOINDICATORS, UPTAKE, TOXICITY, *PROTOZOA
0377 " OIL SPILLS, LIABILITY, COMPENSATION, CHEMICAL ANALYSIS, USCG
0378 " SAMPLING, NATURAL SEEPAGE, CHEMICAL ANALYSIS, ANALYTICAL TECHNIQUES, WEATHERING, SPECTROSCOPY
0379 " SAMPLING, HYDROCARBONS , CHROMATOGRAPHY, CHEMICAL ANALYSIS, ANALYTICAL TECHNIQUES, SPECTROSCOPY, *IR, *UV, *FLUORESCENCE
0380 " MASSACHUSETTS, HYDROCARBONS , FISH, FATE, CHROMATOGRAPHY, CHEMICAL ANALYSIS, ARGO MERCHANT SPILL, ANALYTICAL TECHNIQUES
0381 " PETROLEUM PRODUCTS, OIL SPILLS, MONITORING, CHEMICAL ANALYSIS
0563 " PHYTOPLANKTON, FISH, FINLAND, CONCENTRATIONS, BIOLOGICAL EFFECTS, BALTIC SEA, ANALYTICAL TECHNIQUES, SWEDEN, USSR, *TAGGING
0597 " RISK ANALYSIS, OIL SPILLS, MODELS, FATE, ENVIRONMENTAL EFFECTS, DISPERSANTS, BEHAVIOR, SPILL RESPONSE, SPILL CLEANUP
0615 " OCS, MONITORING, FATE, COASTAL WATERS, SOURCES, *POLLUTANT TRANSFER
R014 " HYDROCARBONS , DETECTION, CONTAMINANTS, ANALYTICAL TECHNIQUES
R020 " HYDROCARBONS , CRUDE OIL, CHROMATOGRAPHY, ANALYTICAL TECHNIQUES, SPECTROMETRY, *IR
R021 " SEDIMENTS, OIL DISCHARGES, ESTUARIES, DELAWARE, *PHENOLIC COMPOUNDS, *URBAN RUNOFF
R048 " MARINE ENVIRONMENT, FOOD WEB, ENVIRONMENTAL EFFECTS, BIOLOGICAL EFFECTS
0351 SOURCES, REMOTE SENSING, OIL SLICKS, OFFSHORE DEVELOPMENT, MONITORING, COASTAL WATERS, ARCTIC, TANKERS, SURVEILLANCE, *SURSAT SATELLITE SYSTEM

0354 SOURCES, REMOTE SENSING, OIL DISCHARGES, ENVIRONMENTAL DETERIORATION, DETECTION, WATER QUALITY, *HONG KONG
0360 " SEDIMENTS, SEA SURFACE, PAH, MARINE ORGANISMS, HYDROCARBONS , GEORGES BANK, GC/MS, CHEMICAL ANALYSIS, BIOGENIC HYDROCARBONS, BENTHOS, ARGO MERCHANT SPILL, WSF, ZOOPLANKTON, TANKERS
0369 " JAPAN, CONTAMINANTS, CHEMICAL ANALYSIS, BAYS, WATER QUALITY
0452 " PREDICTIONS, OFFSHORE DEVELOPMENT, NORTH SEA, MOVEMENT, EKOFISK BLOWOUT, CONTINGENCY PLANNING, SPILL RESPONSE
0465 " REGULATIONS, OIL TRANSPORT, INTERNATIONAL CONVENTIONS, IMCO, FATE, BIOLOGICAL EFFECTS, TANKERS, *LONDON DUMPING CONVENTION
0479 " SHIPS, POLLUTION PREVENTION, OIL SLICKS, EQUIPMENT, DISPERSION, BIODEGRADATION, SPILL CONTAINMENT, SPILL CLEANUP, TANKERS, STATISTICS, SPREADING
0509 " MARINE ORGANISMS, MARINE ENVIRONMENT, FOOD WEB, CARCINOGENS, BIOLOGICAL EFFECTS, AROMATIC HYDROCARBONS, *AHH
0565 " MEDITERRANEAN SEA, MARINE ENVIRONMENT, ENVIRONMENTAL EFFECTS
0615 " SOURCE IDENTIFICATION, OCS, MONITORING, FATE, COASTAL WATERS, *POLLUTANT TRANSFER
0674 " ENVIRONMENTAL EFFECTS, DETECTION
R054 " SEDIMENTS, PRODUCTION , MOVEMENT, FATE, CONTAMINANTS, ALASKA , ADSORPTION, *COOK INLET
0519 SPAIN, MORTALITY, MOLLUSKS, INVERTEBRATES, CRUDE OIL, COASTS, BIOLOGICAL EFFECTS, BENTHOS, URQUIOLA SPILL
0520 " METULA SPILL, INVERTEBRATES, INTERTIDAL ZONE, DISTRIBUTION, COASTS, BIOLOGICAL EFFECTS
0654 " TANKERS, URQUIOLA SPILL
0364 SPECTROMETRY, SAMPLING, MONITORING, EQUIPMENT, CHEMICAL ANALYSIS, BIBLIOGRAPHIES, ANALYTICAL TECHNIQUES, SURVEILLANCE
R020 " SOURCE IDENTIFICATION, HYDROCARBONS , CRUDE OIL, CHROMATOGRAPHY, ANALYTICAL TECHNIQUES, *IR
0362 SPECTROSCOPY, OIL SPILLS, HYDROCARBONS , DISPERSANTS, CHEMICAL ANALYSIS, ANALYTICAL TECHNIQUES
0371 " CONCENTRATIONS, CHEMICAL ANALYSIS, BALTIC SEA, *IR
0372 " INDUSTRIES, CHEMICAL ANALYSIS, WASTEWATERS
0378 " SOURCE IDENTIFICATION, SAMPLING, NATURAL SEEPAGE, CHEMICAL ANALYSIS, ANALYTICAL TECHNIQUES, WEATHERING
0379 " SOURCE IDENTIFICATION, SAMPLING, HYDROCARBONS , CHROMATOGRAPHY, CHEMICAL ANALYSIS, ANALYTICAL TECHNIQUES, *IR, *UV, *FLUORESCENCE
0399 SPILL CLEANUP, SORBENTS, RIVERS, INLAND, ICE, EQUIPMENT, SPILL CONTAINMENT, *LAND SPILLS
0400 " PATENT, EQUIPMENT, DESIGN-ENGINEERING, SPILL CONTAINMENT
0401 " OIL SPILLS, INCINERATION, ICE, GREAT LAKES, FUEL OIL, *IMPERIAL ST. CLAIR SPILL
0402 " SHORELINES, HARBORS, FRANCE, ESTUARIES, COASTS, BEACHES, AMOCO CADIZ SPILL, SPILL RESPONSE, SPILL DISPOSAL
0403 " OIL SLICKS, ENVIRONMENTAL EFFECTS, DISPERSANTS, BEACHES, BEACH CLEANUP, ANALYTICAL TECHNIQUES, TOXICITY, UK, *LICENSING
0404 " SORBENTS, EQUIPMENT, EMULSIONS, DISPERSANTS, BIODEGRADATION, AMOCO CADIZ SPILL, SPILL REMOVAL, *CHEMICAL AGENTS
0405 " OIL SLICKS, DISPERSANTS, COST ANALYSIS, SPILL REMOVAL, *AIRCRAFT
0406 " SEDIMENTS, FATE, ENVIRONMENTAL EFFECTS, DISPERSANTS, CRUDE OIL, BRAZIL, BEACHES, *BRAZILIAN MARINA SPILL
0407 " SKIMMERS, EQUIPMENT, DESIGN-ENGINEERING, *CANADIAN COAST GUARD, *PERFORMANCE TESTING
0409 " SKIMMERS, PATENT, FLOTATION, EQUIPMENT, DESIGN-ENGINEERING
0410 " SANSINENA SPILL, HARBORS, EQUIPMENT, CALIFORNIA, SPILL RESPONSE, TANKERS
0411 " INFORMATION SYSTEMS, EQUIPMENT, SPILL RESPONSE, USCG
0413 " SKIMMERS, EQUIPMENT, EPA, DESIGN-ENGINEERING, BOOMS, USCG, *PERFORMANCE TESTING, *OHMSETT FACILITY
0414 " OIL SLICKS, FATE, DISPERSANTS, WEATHERING, TOXICITY
0415 " SKIMMERS, SHIPS, EQUIPMENT, DESIGN-ENGINEERING, BOOMS, *FIELD TESTS, *AIR CUSHION VEHICLES
0416 " SHORELINES, SHIPS, FUEL OIL, ST. LAWRENCE RIVER, *NEPCO 140 SPILL
0417 " SKIMMERS, PATENT, EQUIPMENT, DESIGN-ENGINEERING
0418 " SKIMMERS, PATENT, EQUIPMENT, DESIGN-ENGINEERING
0419 " SKIMMERS, INCINERATION, ICE, FUEL OIL, EQUIPMENT, BUZZARDS BAY, BOUCHARD 65 SPILL, BOOMS
0420 " SKIMMERS, EQUIPMENT, EPA, DESIGN-ENGINEERING, *PERFORMANCE TESTING, *OHMSETT FACILITY
0421 " OIL SLICKS, SPILL RESPONSE
0422 " SKIMMERS, OIL SLICKS, DISPERSANTS, CALIFORNIA, API, *PETROLEUM CONTINGENCY ORGANIZATION, *FIELD TESTS
0423 " PENNSYLVANIA, LEAKAGE, GROUNDWATER, FUEL OIL, SPILL CONTAINMENT, SPILL REMOVAL, OILDISCHARGES, STORAGE
0424 " SANSINENA SPILL, HARBORS, EQUIPMENT, CALIFORNIA, SPILL RESPONSE, TANKERS, USCG
0425 " SHORELINES, INTERTIDAL ZONE, EQUIPMENT, ENVIRONMENTAL EFFECTS, ECONOMICS, DISPERSANTS, BEACHES

0426 SPILL CLEANUP, RESTORATION, MARSHES, MARINE MAMMALS, ENVIRONMENTAL EFFECTS, BEACHES, SPILL RESPONSE
0427 " PERSONNEL TRAINING, CONTINGENCY PLANNING, CANADA, SPILL RESPONSE
0428 " PERSONNEL TRAINING, CONTINGENCY PLANNING, SPILL PREVENTION, SPILL RESPONSE
0429 " PERSONNEL TRAINING, CONTINGENCY PLANNING, SPILL RESPONSE
0430 " EQUIPMENT, CONTINGENCY PLANNING, CARIBBEAN SEA, SPILL COOPERATIVES, SPILL RESPONSE
0433 " RESTORATION, PIPELINES, INLAND, ICE, CONTINGENCY PLANNING, ALASKA , SPILL RESPONSE, TRANS-ALASKA PIPELINE, SPILL CONTAINMENT
0434 " GUIDELINES, ENVIRONMENTAL PROTECTION, DISPERSANTS, CONTINGENCY PLANNING
0435 " POLLUTION CONTROL, GOVERNMENT AGENCIES, CONTINGENCY PLANNING, SPILL RESPONSE, USCG, *NATIONAL RESPONSE CENTER
0439 " OIL SPILLS, FRANCE, EQUIPMENT, CONTINGENCY PLANNING, AMOCO CADIZ SPILL, SPILL RESPONSE
0440 " OFFSHORE PRODUCTION, HARBORS, EQUIPMENT, SPILL COOPERATIVES, SPILL RESPONSE
0442 " PERSONNEL TRAINING, OCS, EQUIPMENT, CONTINGENCY PLANNING, ATLANTIC OCEAN, SPILL COOPERATIVES, SPILL RESPONSE
0443 " PERSONNEL TRAINING, OIL SPILLS, CONTINGENCY PLANNING, SPILL RESPONSE, TANKERS
0444 " EQUIPMENT, ENVIRONMENTAL EFFECTS, DISPERSANTS, CONTINGENCY PLANNING, SPILL RESPONSE, *LOGISTICS, *CHEMICAL AGENTS
0445 " GOVERNMENT AGENCIES, ENVIRONMENTAL EFFECTS, CONTINGENCY PLANNING, SPILL RESPONSE, SPILL COOPERATIVES
0447 " POLLUTION CONTROL, INDUSTRIES, CONTINGENCY PLANNING, CANADA, BEAUFORT SEA, SPILL RESPONSE
0448 " POLLUTION CONTROL, OIL INDUSTRY, FOREIGN GOVERNMENTS, DISPERSANTS, CONTINGENCY PLANNING, AUSTRALIA
0449 " ICE, BEHAVIOR, ARCTIC, ALASKA , SPILL RESPONSE, SUBARCTIC REGIONS,EQUIPMENT, USCG
0450 " MASSACHUSETTS, LIABILITY, GOVERNMENT AGENCIES, CONTINGENCY PLANNING, SPILL RESPONSE, TANKERS, USCG, *GLOBAL HOPE SPILL
0454 " PERSONNEL TRAINING, GULF OF MEXICO, EQUIPMENT, CONTINGENCY PLANNING, SPILL COOPERATIVES, SPILL RESPONSE
0455 " SHORELINES, OCEANS, EQUIPMENT, DISPERSANTS, CONTINGENCY PLANNING, SPILL RESPONSE, SPREADING
0456 " SKIMMERS, LOUISIANA, EQUIPMENT, CONTINGENCY PLANNING, BOOMS, SPILL RESPONSE, STRATEGIC PETROLEUM RESERVE, STORAGE
0462 " LIABILITY, LEGISLATION, COST ANALYSIS, US GOVERNMENT
0467 " REGULATIONS, POLLUTION CONTROL, LEGISLATION, JAPAN, GOVERNMENT AGENCIES, FOREIGN GOVERNMENTS, EQUIPMENT, CONTINGENCY PLANNING
0475 " REGULATIONS, LEGISLATION, LAW ENFORCEMENT, GOVERNMENT AGENCIES, FOREIGN GOVERNMENTS, EQUIPMENT, CONTINGENCY PLANNING, BLACK SEA, USSR
0479 " SOURCES, SHIPS, POLLUTION PREVENTION, OIL SLICKS, EQUIPMENT, DISPERSION, BIODEGRADATION, SPILL CONTAINMENT, TANKERS, STATISTICS, SPREADING
0532 " SHIPS, EPA, ENVIRONMENTAL EFFECTS, ECONOMIC EFFECTS, COMPENSATION, ST. LAWRENCE RIVER, *NEPCO 140 SPILL
0534 " RECOVERY, OIL SPILLS, ENVIRONMENTAL EFFECTS, ECOSYSTEMS, CONTINGENCY PLANNING
0535 " RECOVERY, PHYSICAL EFFECTS, OIL SPILLS, MOVEMENT, METULA SPILL, FATE, BEHAVIOR, STRAIT OF MAGELLAN
0541 " RECOVERY, OIL SPILLS, MARINE ORGANISMS, ENVIRONMENTAL EFFECTS, DISPERSANTS, BIOLOGICAL EFFECTS, AMOCO CADIZ SPILL
0551 " OIL SPILLS, LIABILITY, LEGISLATION, COMPENSATION, US GOVERNMENT
0560 " SHIPS, MARSHES, FISH, ENVIRONMENTAL EFFECTS, BAYS, WILDLIFE, ST. LAWRENCE RIVER, *NEPCO 140 SPILL
0568 " RECOVERY, ONSHORE IMPACTS, OIL SPILLS, METULA SPILL, INTERTIDAL ZONE, ENVIRONMENTAL EFFECTS, CHILE, BIOLOGICAL EFFECTS, STRAIT OF MAGELLAN
0570 " PLANTS, PIPELINES, OIL SPILLS, MONITORING, MARSHES, BIOLOGICAL EFFECTS, BENTHOS, TEXAS
0579 " MICROORGANISMS, HYDROCARBONS , CRUDE OIL, BIODEGRADATION, BACTERIA, *PLASMID TRANSFER, *GENETIC ENGINEERING, *PSEUDOMONAS
0597 " SOURCE IDENTIFICATION, RISK ANALYSIS, OIL SPILLS, MODELS, FATE, ENVIRONMENTAL EFFECTS, DISPERSANTS, BEHAVIOR, SPILL RESPONSE
0627 " OCS, LIABILITY, LEGISLATION, ECONOMIC EFFECTS, COMPENSATION
0631 " LIABILITY, LEGISLATION, ECONOMIC EFFECTS, COMPENSATION, SPILL COOPERATIVES, *SUPERFUND
0657 " PORTS , OIL TRANSPORT, OIL TERMINALS, INDUSTRIES, GOVERNMENT AGENCIES, CONTINGENCY PLANNING, ALASKA , SPILL RESPONSE, USCG, *PORT VALDEZ
0658 " OIL TRANSFER, EQUIPMENT, CONTINGENCY PLANNING, CALIFORNIA, TANKERS, *LIGHTERING OPERATIONS, *VLCC
0660 " LIABILITY, LEGISLATION, ECONOMIC EFFECTS, COMPENSATION, SPILL COOPERATIVES, TANKERS
R024 " SKIMMERS, EQUIPMENT, EPA, DOE, BOOMS, *PERFORMANCE TESTING, *OHMSETT FACILITY
R025 " OIL SPILLS, DISPERSANTS
R026 " PERSONNEL TRAINING, MANUALS, SPILL RESPONSE
R027 " POLLUTION PREVENTION, POLLUTION CONTROL, PERSONNEL TRAINING, CONTINGENCY PLANNING, SPILL RESPONSE
0382 SPILL CONTAINMENT, SHIPS, PATENT, OIL TRANSFER, EQUIPMENT, DESIGN-ENGINEERING, SPILL REMOVAL, *HYDRO-CARPET
0383 " PATENT, EQUIPMENT, DESIGN-ENGINEERING, BOOMS, SPILL REMOVAL

0384 SPILL CONTAINMENT, SHIPS, PATENT, EQUIPMENT, DESIGN-ENGINEERING, BOOMS
0385 " OCS, EQUIPMENT, DESIGN-ENGINEERING, BLOWOUTS, ARCTIC, SPILL REMOVAL, *UNDERWATER CONTAINMENT
0386 " OIL SLICKS, EQUIPMENT, EPA, DESIGN-ENGINEERING, BOOMS, *PERFORMANCE TESTING, *OHMSETT FACILITY
0387 " RIVERS, BOOMS, DESIGN-ENGINEERIGN, *DEFLECTORS
0388 " EQUIPMENT, DISPERSION, DESIGN-ENGINEERING
0389 " PHYSICAL EFFECTS, OIL SLICKS, MODELS, EQUIPMENT, BOOMS, BEHAVIOR
0390 " PATENT, FLOTATION, EQUIPMENT, DESIGN-ENGINEERING, BOOMS
0391 " PATENT, EQUIPMENT, DESIGN-ENGINEERING, BOOMS
0392 " EQUIPMENT, DESIGN-ENGINEERING, BOOMS
0393 " SHIPS, POLLUTION CONTROL, PATENT, LEAKAGE, *CRYOTHERMAL METHOD
0394 " PATENT, EQUIPMENT, DESIGN-ENGINEERING, BOOMS
0395 " SKIMMERS, RIVERS, ICE, EQUIPMENT, SPILL REMOVAL
0396 " RIVERS, ICE, DESIGN-ENGINEERING, BOOMS, USCG, *CANADIAN COAST GUARD
0397 " RIVERS, ICE, DESIGN-ENGINEERING, SPILL REMOVAL
0398 " PATENT, EQUIPMENT, DESIGN-ENGINEERING, BOOMS, *TOW PLATES
0399 " SPILL CLEANUP, SORBENTS, RIVERS, INLAND, ICE, EQUIPMENT, *LAND SPILLS
0400 " SPILL CLEANUP, PATENT, EQUIPMENT, DESIGN-ENGINEERING
0423 " SPILL CLEANUP, PENNSYLVANIA, LEAKAGE, GROUNDWATER, FUEL OIL, SPILL REMOVAL, OILDISCHARGES, STORAGE
0433 " SPILL CLEANUP, RESTORATION, PIPELINES, INLAND, ICE, CONTINGENCY PLANNING, ALASKA , SPILL RESPONSE, TRANS-ALASKA PIPELINE
0479 " SPILL CLEANUP, SOURCES, SHIPS, POLLUTION PREVENTION, OIL SLICKS, EQUIPMENT, DISPERSION, BIODEGRADATION, TANKERS, STATISTICS, SPREADING
0606 " PHYSICAL EFFECTS, OIL SLICKS, MOVEMENT, BEHAVIOR
0614 " OIL SPILLS, MOVEMENT, MONITORING, FATE, DISPERSION, DISPERSANTS, BOOMS, SPREADING
0666 " POLLUTION CONTROL, PIPELINES, OIL TRANSPORT, OIL TRANSFER, OIL INDUSTRY, EQUIPMENT, DRILLING , DETECTION, STORAGE, TANKERS, SPILL REMOVAL, SPILL DISPOSAL
R022 " SORBENTS, EPA, BOOMS, *PERFORMANCE TESTING, *OHMSETT FACILITY
R023 " EQUIPMENT, EPA, BOOMS, *PERFORMANCE TESTING, *AIR JET BOOM, *OHMSETT FACILITY
0430 SPILL COOPERATIVES, SPILL CLEANUP, EQUIPMENT, CONTINGENCY PLANNING, CARIBBEAN SEA, SPILL RESPONSE
0440 " SPILL CLEANUP, OFFSHORE PRODUCTION, HARBORS, EQUIPMENT, SPILL RESPONSE
0442 " SPILL CLEANUP, PERSONNEL TRAINING, OCS, EQUIPMENT, CONTINGENCY PLANNING, ATLANTIC OCEAN, SPILL RESPONSE
0445 " SPILL CLEANUP, GOVERNMENT AGENCIES, ENVIRONMENTAL EFFECTS, CONTINGENCY PLANNING, SPILL RESPONSE
0454 " SPILL CLEANUP, PERSONNEL TRAINING, GULF OF MEXICO, EQUIPMENT, CONTINGENCY PLANNING, SPILL RESPONSE
0631 " SPILL CLEANUP, LIABILITY, LEGISLATION, ECONOMIC EFFECTS, COMPENSATION, *SUPERFUND
0660 " SPILL CLEANUP, LIABILITY, LEGISLATION, ECONOMIC EFFECTS, COMPENSATION, TANKERS
0402 SPILL DISPOSAL, SPILL CLEANUP, SHORELINES, HARBORS, FRANCE, ESTUARIES, COASTS, BEACHES, AMOCO CADIZ SPILL, SPILL RESPONSE
0408 " EQUIPMENT, DESIGN-ENGINEERING, SPILL REMOVAL, USCG, *DEBRIS DISPOSAL SYSTEMS
0666 " SPILL CONTAINMENT, POLLUTION CONTROL, PIPELINES, OIL TRANSPORT, OIL TRANSFER, OIL INDUSTRY, EQUIPMENT, DRILLING , DETECTION, STORAGE, TANKERS, SPILL REMOVAL
0382 SPILL REMOVAL, SPILL CONTAINMENT, SHIPS, PATENT, OIL TRANSFER, EQUIPMENT, DESIGN-ENGINEERING, *HYDRO-CARPET
0383 " SPILL CONTAINMENT, PATENT, EQUIPMENT, DESIGN-ENGINEERING, BOOMS
0385 " SPILL CONTAINMENT, OCS, EQUIPMENT, DESIGN-ENGINEERING, BLOWOUTS, ARCTIC, *UNDERWATER CONTAINMENT
0395 " SPILL CONTAINMENT, SKIMMERS, RIVERS, ICE, EQUIPMENT
0397 " SPILL CONTAINMENT, RIVERS, ICE, DESIGN-ENGINEERING
0404 " SPILL CLEANUP, SORBENTS, EQUIPMENT, EMULSIONS, DISPERSANTS, BIODEGRADATION, AMOCO CADIZ SPILL, *CHEMICAL AGENTS
0405 " SPILL CLEANUP, OIL SLICKS, DISPERSANTS, COST ANALYSIS, *AIRCRAFT
0408 " SPILL DISPOSAL, EQUIPMENT, DESIGN-ENGINEERING, USCG, *DEBRIS DISPOSAL SYSTEMS
0412 " POLLUTION CONTROL, PATENT, OIL-WATER SEPARATION, MONITORING, EQUIPMENT, DESIGN-ENGINEERING
0423 " SPILL CONTAINMENT, SPILL CLEANUP, PENNSYLVANIA, LEAKAGE, GROUNDWATER, FUEL OIL, OILDISCHARGES, STORAGE
0666 " SPILL DISPOSAL, SPILL CONTAINMENT, POLLUTION CONTROL, PIPELINES, OIL TRANSPORT, OIL TRANSFER, OIL INDUSTRY, EQUIPMENT, DRILLING , DETECTION, STORAGE, TANKERS
0402 SPILL RESPONSE, SPILL DISPOSAL, SPILL CLEANUP, SHORELINES, HARBORS, FRANCE, ESTUARIES, COASTS, BEACHES, AMOCO CADIZ SPILL
0410 " SPILL CLEANUP, SANSINENA SPILL, HARBORS, EQUIPMENT, CALIFORNIA, TANKERS
0411 " SPILL CLEANUP, INFORMATION SYSTEMS, EQUIPMENT, USCG
0421 " SPILL CLEANUP, OIL SLICKS
0424 " SPILL CLEANUP, SANSINENA SPILL, HARBORS, EQUIPMENT, CALIFORNIA, TANKERS, USCG
0426 " SPILL CLEANUP, RESTORATION, MARSHES, MARINE MAMMALS, ENVIRONMENTAL EFFECTS, BEACHES
0427 " SPILL CLEANUP, PERSONNEL TRAINING, CONTINGENCY PLANNING, CANADA
0428 " SPILL CLEANUP, PERSONNEL TRAINING, CONTINGENCY PLANNING, SPILL PREVENTION
0429 " SPILL CLEANUP, PERSONNEL TRAINING, CONTINGENCY PLANNING
0430 " SPILL COOPERATIVES, SPILL CLEANUP, EQUIPMENT, CONTINGENCY PLANNING, CARIBBEAN SEA

0431 SPILL RESPONSE, SHIPS, RIVERS, POLLUTION CONTROL, OIL REMOVAL, MISSISSIPPI RIVER, ICE, EQUIPMENT, USCG
0433 " SPILL CONTAINMENT, SPILL CLEANUP, RESTORATION, PIPELINES, INLAND, ICE, CONTINGENCY PLANNING, ALASKA , TRANS-ALASKA PIPELINE
0435 " SPILL CLEANUP, POLLUTION CONTROL, GOVERNMENT AGENCIES, CONTINGENCY PLANNING, USCG, *NATIONAL RESPONSE CENTER
0436 " POLLUTION CONTROL, CONTINGENCY PLANNING, UK
0437 " INFORMATION SYSTEMS, CANADA, *MANITOBA, *ENVIRONMENTAL ACCIDENT PROGRAM, *SPILL REPORTING
0438 " SHIPS, EQUIPMENT, DISPERSANTS, DESIGN-ENGINEERING, CANADA, *CANADIAN COAST GUARD
0439 " SPILL CLEANUP, OIL SPILLS, FRANCE, EQUIPMENT, CONTINGENCY PLANNING, AMOCO CADIZ SPILL
0440 " SPILL COOPERATIVES, SPILL CLEANUP, OFFSHORE PRODUCTION, HARBORS, EQUIPMENT
0441 " GOVERNMENT AGENCIES, CONTINGENCY PLANNING, CANADA, BEAUFORT SEA, *BREX III FIELD EXERCISE
0442 " SPILL COOPERATIVES, SPILL CLEANUP, PERSONNEL TRAINING, OCS, EQUIPMENT, CONTINGENCY PLANNING, ATLANTIC OCEAN
0443 " SPILL CLEANUP, PERSONNEL TRAINING, OIL SPILLS, CONTINGENCY PLANNING, TANKERS
0444 " SPILL CLEANUP, EQUIPMENT, ENVIRONMENTAL EFFECTS, DISPERSANTS, CONTINGENCY PLANNING, *LOGISTICS, *CHEMICAL AGENTS
0445 " SPILL COOPERATIVES, SPILL CLEANUP, GOVERNMENT AGENCIES, ENVIRONMENTAL EFFECTS, CONTINGENCY PLANNING
0446 " MOVEMENT, MODELS, ICE, CONTINGENCY PLANNING, ARCTIC, SPREADING
0447 " SPILL CLEANUP, POLLUTION CONTROL, INDUSTRIES, CONTINGENCY PLANNING, CANADA, BEAUFORT SEA
0449 " SPILL CLEANUP, ICE, BEHAVIOR, ARCTIC, ALASKA , SUBARCTIC REGIONS,EQUIPMENT, USCG
0450 " SPILL CLEANUP, MASSACHUSETTS, LIABILITY, GOVERNMENT AGENCIES, CONTINGENCY PLANNING, TANKERS, USCG, *GLOBAL HOPE SPILL
0451 " RESOURCE MANAGEMENT, GOVERNMENT AGENCIES, EPA, *US FISH AND WILDLIFE SERVICE
0452 " SOURCES, PREDICTIONS, OFFSHORE DEVELOPMENT, NORTH SEA, MOVEMENT, EKOFISK BLOWOUT, CONTINGENCY PLANNING
0453 " GUIDELINES, ENVIRONMENTAL EFFECTS, CONTINGENCY PLANNING, ARGO MERCHANT SPILL, *SCIENTIFIC RESPONSE
0454 " SPILL COOPERATIVES, SPILL CLEANUP, PERSONNEL TRAINING, GULF OF MEXICO, EQUIPMENT, CONTINGENCY PLANNING
0455 " SPILL CLEANUP, SHORELINES, OCEANS, EQUIPMENT, DISPERSANTS, CONTINGENCY PLANNING, SPREADING
0456 " SPILL CLEANUP, SKIMMERS, LOUISIANA, EQUIPMENT, CONTINGENCY PLANNING, BOOMS, STRATEGIC PETROLEUM RESERVE, STORAGE
0469 " SKIMMERS, RISK ANALYSIS, MODELS, EQUIPMENT, CONTINGENCY PLANNING, BOOMS, *COMPUTER SIMULATIONS
0576 " PLANKTON, OIL SPILLS, MOVEMENT, MARINE MAMMALS, FISH, FATE, ENVIRONMENTAL EFFECTS, CONTINGENCY PLANNING, BIRDS, BIOLOGICAL EFFECTS, BEAUFORT SEA, TOXICITY, *SCIENTIFIC RESPONSE
0597 " SPILL CLEANUP, SOURCE IDENTIFICATION, RISK ANALYSIS, OIL SPILLS, MODELS, FATE, ENVIRONMENTAL EFFECTS, DISPERSANTS, BEHAVIOR
0598 " PREDICTIONS, MOVEMENT, MODELS, GEORGES BANK, FISHERIES, SPILL TRAJECTORIES
0652 " OIL SPILLS, MOVEMENT, METULA SPILL, ENVIRONMENTAL EFFECTS, CHILE, SPREADING, STRAIT OF MAGELLAN
0653 " OIL TRANSFER, OIL SPILLS, METULA SPILL, FOREIGN GOVERNMENTS, CHILE, TANKERS, STRAIT OF MAGELLAN
0657 " SPILL CLEANUP, PORTS , OIL TRANSPORT, OIL TERMINALS, INDUSTRIES, GOVERNMENT AGENCIES, CONTINGENCY PLANNING, ALASKA , USCG, *PORT VALDEZ
R016 " ICE, DEVELOPMENT , DESIGN-ENGINEERING, BEHAVIOR, BEAUFORT SEA, BASELINE STUDIES, ALASKA
R026 " SPILL CLEANUP, PERSONNEL TRAINING, MANUALS
R027 " SPILL CLEANUP, POLLUTION PREVENTION, POLLUTION CONTROL, PERSONNEL TRAINING, CONTINGENCY PLANNING
R028 " PHYSICAL EFFECTS, INFORMATION SYSTEMS, FATE, CHEMICAL EFFECTS, CHEMICAL ANALYSIS, BIOLOGICAL EFFECTS, BEHAVIOR, SPILL TRAJECTORIES, *SCIENTIFIC RESPONSE
R046 " OIL SPILLS, INFORMATION SYSTEMS, ENVIRONMENTAL EFFECTS, CONTINGENCY PLANNING, ANALYTICAL TECHNIQUES
0355 SPILL TRAJECTORIES, SEA SURFACE, REMOTE SENSING, MOVEMENT, MONITORING, HYDROCARBONS ANALYTICAL TECHNIQUES, SURVEILLANCE
0594 " SEA SURFACE, PREDICTIONS, PHYSICAL EFFECTS, MOVEMENT, MODELS, DRIFT, SPREADING
0598 " SPILL RESPONSE, PREDICTIONS, MOVEMENT, MODELS, GEORGES BANK, FISHERIES
0599 " SEA SURFACE, MOVEMENT, DRIFT, SPREADING
0600 " PREDICTIONS, OIL SPILLS, MOVEMENT, MODELS, DRIFT, ARGO MERCHANT SPILL, SPREADING
0603 " PREDICTIONS, OIL SPILLS, MOVEMENT, MONITORING, MODELS, DRIFT
0612 " SEA SURFACE, PREDICTIONS, OIL SPILLS, MOVEMENT, MODELS, BEAUFORT SEA, ARCTIC
R028 " SPILL RESPONSE, PHYSICAL EFFECTS, INFORMATION SYSTEMS, FATE, CHEMICAL EFFECTS, CHEMICAL ANALYSIS, BIOLOGICAL EFFECTS, BEHAVIOR, *SCIENTIFIC RESPONSE
R056 " SEDIMENTS, PREDICTIONS, OCEANS, MODELS, *NEW ZEALAND, *COOK STRAIT
R059 " RISK ANALYSIS, REMOTE SENSING, OFFSHORE DEVELOPMENT, MOVEMENT, MODELS, ICE, BEAUFORT SEA, *RADAR

0352 SPREADING, REMOTE SENSING, OIL SLICKS, MOVEMENT, MODELS, ESTUARIES, DRIFT, DELAWARE BAY, SURVEILLANCE, *ESTUARINE FRONTS
0446 " SPILL RESPONSE, MOVEMENT, MODELS, ICE, CONTINGENCY PLANNING, ARCTIC
0455 " SPILL RESPONSE, SPILL CLEANUP, SHORELINES, OCEANS, EQUIPMENT, DISPERSANTS, CONTINGENCY PLANNING
0479 " SPILL CONTAINMENT, SPILL CLEANUP, SOURCES, SHIPS, POLLUTION PREVENTION, OIL SLICKS, EQUIPMENT, DISPERSION, BIODEGRADATION, TANKERS, STATISTICS
0583 " SEA SURFACE, NORTH SEA, FATE, EKOFISK BLOWOUT, DRIFT, WEATHERING, STATISTICAL ANLYSIS
0594 " SPILL TRAJECTORIES, SEA SURFACE, PREDICTIONS, PHYSICAL EFFECTS, MOVEMENT, MODELS, DRIFT
0599 " SPILL TRAJECTORIES, SEA SURFACE, MOVEMENT, DRIFT
0600 " SPILL TRAJECTORIES, PREDICTIONS, OIL SPILLS, MOVEMENT, MODELS, DRIFT, ARGO MERCHANT SPILL
0601 " PREDICTIONS, PHYSICAL EFFECTS, MOVEMENT, MODELS, ESTUARIES, BEHAVIOR, *TIDAL SIMULATIONS
0608 " PREDICTIONS, OIL SPILLS, MOVEMENT, MODELS, GEORGES BANK, FISHERIES, FISH, FATE, DRIFT, BIOLOGICAL EFFECTS, BEHAVIOR, ATLANTIC OCEAN, *COD
0614 " SPILL CONTAINMENT, OIL SPILLS, MOVEMENT, MONITORING, FATE, DISPERSION, DISPERSANTS, BOOMS
0617 " NORTH SEA, HYDROCARBONS , GC/MS, FATE, EKOFISK BLOWOUT, DISTRIBUTION, CHEMICAL ANALYSIS
0652 " SPILL RESPONSE, OIL SPILLS, MOVEMENT, METULA SPILL, ENVIRONMENTAL EFFECTS, CHILE, STRAIT OF MAGELLAN
0416 ST. LAWRENCE RIVER, SPILL CLEANUP, SHORELINES, SHIPS, FUEL OIL, *NEPCO 140 SPILL
0532 " SPILL CLEANUP, SHIPS, EPA, ENVIRONMENTAL EFFECTS, ECONOMIC EFFECTS, COMPENSATION, *NEPCO 140 SPILL
0560 " SPILL CLEANUP, SHIPS, MARSHES, FISH, ENVIRONMENTAL EFFECTS, BAYS, WILDLIFE, *NEPCO 140 SPILL
0559 STATE GOVERNMENTS, MARINE ENVIRONMENT, LIABILITY, LEGISLATION, ALASKA , US GOVERNMENT
R069 STATISTICAL ANALYSIS, RESOURCE MANAGEMENT, PUGET SOUND, NEW YORK, INFORMATION SYSTEMS, WASHINGTON, *MESA
0479 STATISTICS, SPREADING, SPILL CONTAINMENT, SPILL CLEANUP, SOURCES, SHIPS, POLLUTION PREVENTION, OIL SLICKS, EQUIPMENT, DISPERSION, BIODEGRADATION, TANKERS
0662 " SHIPS, SAFETY, REGULATIONS, PORTS , LAW ENFORCEMENT, TANKERS, USCG
0423 STORAGE, SPILL REMOVAL, SPILL CONTAINMENT, SPILL CLEANUP, PENNSYLVANIA, LEAKAGE, GROUNDWATER, FUEL OIL, OILDISCHARGES
0456 " SPILL RESPONSE, SPILL CLEANUP, SKIMMERS, LOUISIANA, EQUIPMENT, CONTINGENCY PLANNING, BOOMS, STRATEGIC PETROLEUM RESERVE
0548 " SOCIOECONOMIC EFFECTS, REFINERIES, PETROCHEMICALS, OIL TRANSPORT, NORTH CAROLINA, ENVIRONMENTAL EFFECTS, DEEPWATER PORTS, COST ANALYSIS
0659 " REGULATIONS, POLLUTION PREVENTION, OIL TANKS, INLAND, EPA, CONTINGENCY PLANNING, COASTS, USN
0666 " SPILL REMOVAL, SPILL DISPOSAL, SPILL CONTAINMENT, POLLUTION CONTROL, PIPELINES, OIL TRANSPORT, OIL TRANSFER, OIL INDUSTRY, EQUIPMENT, DRILLING , DETECTION, TANKERS
0675 " REFINERIES, PRODUCTION , PIPELINES, OIL TRANSPORT, OIL SPILLS, OIL SHALE, OFFSHORE DEVELOPMENT, EXPLORATION , *ACCIDENTS
0376 STRAIT OF MAGELLAN, SEDIMENTS, SAMPLING, ONSHORE IMPACTS, OIL SPILLS, METULA SPILL, GC/MS, CONCENTRATIONS, CHILE, CHEMICAL ANALYSIS, BIOLOGICAL EFFECTS, WEATHERING
0521 " RECOVERY, OIL SPILLS, MORTALITY, METULA SPILL, INVERTEBRATES, INTERTIDAL ZONE, DETECTION, CHILE, BIOLOGICAL EFFECTS
0535 " SPILL CLEANUP, RECOVERY, PHYSICAL EFFECTS, OIL SPILLS, MOVEMENT, METULA SPILL, FATE, BEHAVIOR
0567 " OIL SPILLS, METULA SPILL, MARSHES, ENVIRONMENTAL EFFECTS, CHILE, BEACHES, TANKERS
0568 " SPILL CLEANUP, RECOVERY, ONSHORE IMPACTS, OIL SPILLS, METULA SPILL, INTERTIDAL ZONE, ENVIRONMENTAL EFFECTS, CHILE, BIOLOGICAL EFFECTS
0652 " SPREADING, SPILL RESPONSE, OIL SPILLS, MOVEMENT, METULA SPILL, ENVIRONMENTAL EFFECTS, CHILE
0653 " SPILL RESPONSE, OIL TRANSFER, OIL SPILLS, METULA SPILL, FOREIGN GOVERNMENTS, CHILE, TANKERS
0456 STRATEGIC PETROLEUM RESERVE, STORAGE, SPILL RESPONSE, SPILL CLEANUP, SKIMMERS, LOUISIANA, EQUIPMENT, CONTINGENCY PLANNING, BOOMS
0449 SUBARCTIC REGIONS, SPILL RESPONSE, SPILL CLEANUP, ICE, BEHAVIOR, ARCTIC, ALASKA ,EQUIPMENT, USCG
0492 " METABOLISM, MARINE MAMMALS, BIOLOGICAL EFFECTS, ARCTIC, TOXICITY
0542 " OIL FIELDS, EXPLORATION , ENVIRONMENTAL EFFECTS, EIS, DRILLING , CANADA, BASELINE STUDIES, ARCTIC
0604 " SEDIMENTS, MOVEMENT, MODELS, HYDROCARBONS
R038 " NOAA, MARINE ORGANISMS, HYDROCARBONS , FATE, ENVIRONMENTAL EFFECTS, ECOSYSTEMS, BIOLOGICAL EFFECTS, ANALYTICAL TECHNIQUES, TOXICITY
0485 SUBLETHAL EFFECTS, SEDIMENTS, MORTALITY, INVERTEBRATES, CRUDE OIL, BENTHOS, ARCTIC, AMPHIPODS, ACUTE EFFECTS, TOXICITY
0494 " MOLLUSKS, FUEL OIL, BEHAVIOR, TOXICITY, WSF, *FEEDING, *CHEMORECEPTION, *ILYANASSA OBSOLETA

0497 SUBLETHAL EFFECTS, REPRODUCTION, HYDROCARBONS , GROWTH, FUEL OIL, FISH, DEVELOPMENT , CONTAMINATION, BIOLOGICAL EFFECTS, *PSEUDOPLEURONECTES AMERICANUS
0498 " MORTALITY, METABOLISM, GROWTH, FUEL OIL, DEVELOPMENT , AROMATIC HYDROCARBONS, WSF, TOXICITY, RESPIRATION, *RHITHROPANOPEUS HARISSI, *LIMULUS POLYPHEMUS
0499 " PAH, HYDROCARBONS , CRUSTACEANS, RESPIRATION, TOXICITY, *PHENANTHRENE, *RHITHROPANOPEUS HARRISII
0506 " INVERTEBRATES, HYDROCARBONS , CRUSTACEANS, CRUDE OIL, BIOLOGICAL EFFECTS, *HISTOLOGY, *PENAEUS AZTECUS
0508 " MORTALITY, MOLLUSKS, DISPERSANTS, CRUDE OIL, BIOLOGICAL EFFECTS, TOXICITY, *ARGOPECTEN IRRADIANS
0510 " MORTALITY, MARINE ORGANISMS, HYDROCARBONS , CRUSTACEANS, ALASKA , TOXICITY
0516 " MOLLUSKS, MARINE ORGANISMS, ALASKA , *MACOMA BALTHICA
0571 " SAMPLING, ANALYTICAL TECHNIQUES, TOXICITY, *LABORATORY DATA ANALYSIS, *FIELD APPLICATIONS
0575 " PHYSICAL EFFECTS, PETROLEUM PRODUCTS, MARSHES, ESTUARIES, ENVIRONMENTAL EFFECTS, ECOSYSTEMS, CHRONIC EFFECTS
R012 " MICROORGANISMS, MARINE ENVIRONMENT, BIOLOGICAL EFFECTS, BIOINDICATORS, BACTERIA, *CHEMOTAXIS
R036 " METABOLISM, MARINE ORGANISMS, HYDROCARBONS , FOOD WEB, FISH, DISPERSANTS, CHEMICAL ANALYSIS, BIOLOGICAL EFFECTS, BASELINE STUDIES, ALASKA , UPTAKE, TOXICITY, *PATHOLOGY
0349 SURVEILLANCE, SHIPS, REMOTE SENSING, POLLUTION CONTROL, EQUIPMENT, COASTAL WATERS, TANKERS, SWEDEN
0350 " REMOTE SENSING, POLLUTION CONTROL, MONITORING, MODELS, GOVERNMENT AGENCIES, *NASA, *SATELLITES
0351 " SOURCES, REMOTE SENSING, OIL SLICKS, OFFSHORE DEVELOPMENT, MONITORING, COASTAL WATERS, ARCTIC, TANKERS, *SURSAT SATELLITE SYSTEM
0352 " SPREADING, REMOTE SENSING, OIL SLICKS, MOVEMENT, MODELS, ESTUARIES, DRIFT, DELAWARE BAY, *ESTUARINE FRONTS
0353 " SANTA BARBARA CHANNEL, REMOTE SENSING, PLATFORMS, OIL SLICKS, NATURAL SEEPAGE, EQUIPMENT, DETECTION, CALIFORNIA, USCG, *RADAR SYSTEMS
0355 " SPILL TRAJECTORIES, SEA SURFACE, REMOTE SENSING, MOVEMENT, MONITORING, HYDROCARBONS , ANALYTICAL TECHNIQUES
0356 " REMOTE SENSING, OIL SPILLS, EQUIPMENT, BEAUFORT SEA
0357 " SHIPS, REMOTE SENSING, POLLUTION CONTROL, MONITORING, LAW ENFORCEMENT, EQUIPMENT, USCG, TANKERS, *AIREYE SYSTEM
0364 " SPECTROMETRY, SAMPLING, MONITORING, EQUIPMENT, CHEMICAL ANALYSIS, BIBLIOGRAPHIES, ANALYTICAL TECHNIQUES
R013 " MONITORING, EQUIPMENT, DETECTION, ANALYTICAL TECHNIQUES
R017 " REMOTE SENSING, OIL SPILLS, MONITORING, DETECTION, CRUDE OIL, ANALYTICAL TECHNIQUES, WEATHERING, *AGING
0349 SWEDEN, SURVEILLANCE, SHIPS, REMOTE SENSING, POLLUTION CONTROL, EQUIPMENT, COASTAL WATERS, TANKERS
0563 " SOURCE IDENTIFICATION, PHYTOPLANKTON, FISH, FINLAND, CONCENTRATIONS, BIOLOGICAL EFFECTS, BALTIC SEA, ANALYTICAL TECHNIQUES, USSR, *TAGGING
0349 TANKERS, SWEDEN, SURVEILLANCE, SHIPS, REMOTE SENSING, POLLUTION CONTROL, EQUIPMENT, COASTAL WATERS
0351 " SURVEILLANCE, SOURCES, REMOTE SENSING, OIL SLICKS, OFFSHORE DEVELOPMENT, MONITORING, COASTAL WATERS, ARCTIC, *SURSAT SATELLITE SYSTEM
0357 " SURVEILLANCE, SHIPS, REMOTE SENSING, POLLUTION CONTROL, MONITORING, LAW ENFORCEMENT, EQUIPMENT, USCG, *AIREYE SYSTEM
0360 " SOURCES, SEDIMENTS, SEA SURFACE, PAH, MARINE ORGANISMS, HYDROCARBONS , GEORGES BANK, GC/MS, CHEMICAL ANALYSIS, BIOGENIC HYDROCARBONS, BENTHOS, ARGO MERCHANT SPILL, WSF, ZOOPLANKTON
0410 " SPILL RESPONSE, SPILL CLEANUP, SANSINENA SPILL, HARBORS, EQUIPMENT, CALIFORNIA
0424 " SPILL RESPONSE, SPILL CLEANUP, SANSINENA SPILL, HARBORS, EQUIPMENT, CALIFORNIA, USCG
0443 " SPILL RESPONSE, SPILL CLEANUP, PERSONNEL TRAINING, OIL SPILLS, CONTINGENCY PLANNING
0450 " SPILL RESPONSE, SPILL CLEANUP, MASSACHUSETTS, LIABILITY, GOVERNMENT AGENCIES, CONTINGENCY PLANNING, USCG, *GLOBAL HOPE SPILL
0461 " REGULATIONS, LIABILITY, LEGISLATION, INTERNATIONAL AGREEMENTS, ECONOMIC EFFECTS, US, TRANS-ALASKA PIPELINE
0465 " SOURCES, REGULATIONS, OIL TRANSPORT, INTERNATIONAL CONVENTIONS, IMCO, FATE, BIOLOGICAL EFFECTS, *LONDON DUMPING CONVENTION
0468 " POLLUTION PREVENTION, POLLUTION CONTROL, OIL DISCHARGES, GOVERNMENT AGENCIES, UK
0472 " SEGREGATED BALLAST, POLLUTION PREVENTION, OIL SPILLS, ECONOMICS, COST ANALYSIS
0476 " POLLUTION PREVENTION, OIL-WATER SEPARATION, FILTRATION, EQUIPMENT, DESIGN-ENGINEERING, BALLAST
0479 " STATISTICS, SPREADING, SPILL CONTAINMENT, SPILL CLEANUP, SOURCES, SHIPS, POLLUTION PREVENTION, OIL SLICKS, EQUIPMENT, DISPERSION, BIODEGRADATION
0538 " MASSACHUSETTS, MARINE ORGANISMS, FISH, ENVIRONMENTAL EFFECTS, BENTHOS, ARGO MERCHANT SPILL, ZOOPLANKTON
0561 " SOCIOECONOMIC EFFECTS, SHIPS, OIL SPILLS, MICROORGANISMS, MARINE ORGANISMS, LEGISLATION, EKOFISK BLOWOUT, ECOSYSTEMS, BIOLOGICAL EFFECTS, ARGO MERCHANT SPILL, WILDLIFE, TOXICITY

0566 TANKERS, FISH, FATE, ENVIRONMENTAL EFFECTS, BIOLOGICAL EFFECTS, *DRUPA SPILL
0567 " STRAIT OF MAGELLAN, OIL SPILLS, METULA SPILL, MARSHES, ENVIRONMENTAL EFFECTS, CHILE, BEACHES
0596 " SHIPS, PREDICTIONS, PACIFIC COAST, OIL TRANSPORT, OIL SPILLS, MODELS, COASTAL WATERS, CALIFORNIA
0602 " PREDICTIONS, PORTS , MODELS, ENVIRONMENTAL EFFECTS, ALASKA
0605 " RISK ANALYSIS, PREDICTIONS, OIL SPILLS, MODELS
0621 " OIL SPILLS, GREENLAND, FUEL OIL, FATE, EVAPORATION, *POTOMAC SPILL
0641 " PRODUCTION , PIPELINES, OIL TRANSPORT, INDUSTRIES, ESTUARIES, DEVELOPMENT , COASTAL WATERS, ALASKA , POLLUTION CONTOL
0643 " SOCIOECONOMIC EFFECTS, SAFETY, POLLUTION CONTROL, OIL INDUSTRY, OCS, LIABILITY, GULF OF ALASKA, FISHERIES, ENVIRONMENTAL MANAGEMENT, ECOSYSTEMS, ECONOMIC EFFECTS, BIOLOGICAL EFFECTS, ALASKA
0653 " STRAIT OF MAGELLAN, SPILL RESPONSE, OIL TRANSFER, OIL SPILLS, METULA SPILL, FOREIGN GOVERNMENTS, CHILE
0654 " SPAIN, URQUIOLA SPILL
0658 " SPILL CLEANUP, OIL TRANSFER, EQUIPMENT, CONTINGENCY PLANNING, CALIFORNIA, *LIGHTERING OPERATIONS, *VLCC
0662 " STATISTICS, SHIPS, SAFETY, REGULATIONS, PORTS , LAW ENFORCEMENT, USCG
0663 " SAFETY, REGULATIONS, POLLUTION PREVENTION, LEGISLATION, COMPENSATION, US
0664 " SAFETY, REGULATIONS, POLLUTION PREVENTION, LEGISLATION, GUIDELINES, US
0665 " SAFETY, REGULATIONS, LAW ENFORCEMENT, ALASKA , USCG, US GOVERNMENT, *VESSEL TRAFFIC SERVICE
0666 " STORAGE, SPILL REMOVAL, SPILL DISPOSAL, SPILL CONTAINMENT, POLLUTION CONTROL, PIPELINES, OIL TRANSPORT, OIL TRANSFER, OIL INDUSTRY, EQUIPMENT, DRILLING , DETECTION
R063 " SHIPS, SAN FRANCISCO BAY, POLLUTION PREVENTION, OIL TRANSFER, OIL DISCHARGES
0623 TAR, SEDIMENTS, NATURAL SEEPAGE, MARINE ORGANISMS, INTERTIDAL ZONE, FATE, DISTRIBUTION, CALIFORNIA, BIOLOGICAL EFFECTS, BEACHES, SANTA BARBARA CHANNEL
0549 TEXAS, SOCIOECONOMIC EFFECTS, ONSHORE IMPACTS, OIL-GAS LEASING, OFFSHORE DEVELOPMENT, OCS, ENVIRONMENTAL EFFECTS, BIBLIOGRAPHIES
0557 " PERSONNEL TRAINING, METULA SPILL, LEGISLATION, CONTINGENCY PLANNING
0570 " SPILL CLEANUP, PLANTS, PIPELINES, OIL SPILLS, MONITORING, MARSHES, BIOLOGICAL EFFECTS, BENTHOS
R032 " OCS, FISH, CRUDE OIL, CHRONIC EFFECTS, BIOLOGICAL EFFECTS, TOXICITY, *HISTOPATHOLOGY, *SCIAENIDEA
0345 TOXICITY, SOURCE IDENTIFICATION, MICROORGANISMS, DETECTION, CONTAMINATION, CONCENTRATIONS, BIOINDICATORS, UPTAKE, *PROTOZOA
0346 " MICROORGANISMS, DETECTION, CONTAMINATION, BIOINDICATORS, UPTAKE, *PROTOZOA, *EUPLOTES DIADALEOS
0373 " DETECTION, CONCENTRATIONS, ANALYTICAL TECHNIQUES, *SPECTROPHOTOMETRY, *GRAVIMETRIC ANALYSIS
0403 " SPILL CLEANUP, OIL SLICKS, ENVIRONMENTAL EFFECTS, DISPERSANTS, BEACHES, BEACH CLEANUP, ANALYTICAL TECHNIQUES, UK, *LICENSING
0414 " SPILL CLEANUP, OIL SLICKS, FATE, DISPERSANTS, WEATHERING
0485 " SUBLETHAL EFFECTS, SEDIMENTS, MORTALITY, INVERTEBRATES, CRUDE OIL, BENTHOS, ARCTIC, AMPHIPODS, ACUTE EFFECTS
0487 " HYDROCARBONS , BIOLOGICAL EFFECTS
0488 " REPRODUCTION, HYDROCARBONS , GROWTH, CHRONIC EFFECTS, BIRDS, BIOLOGICAL EFFECTS, ACUTE EFFECTS
0492 " SUBARCTIC REGIONS, METABOLISM, MARINE MAMMALS, BIOLOGICAL EFFECTS, ARCTIC
0493 " SOLUBILITY, HYDROCARBONS , BIOLOGICAL EFFECTS, ALGAE, *CELL MEMBRANE
0494 " SUBLETHAL EFFECTS, MOLLUSKS, FUEL OIL, BEHAVIOR, WSF, *FEEDING, *CHEMORECEPTION, *ILYANASSA OBSOLETA
0498 " SUBLETHAL EFFECTS, MORTALITY, METABOLISM, GROWTH, FUEL OIL, DEVELOPMENT , AROMATIC HYDROCARBONS, WSF, RESPIRATION, *RHITHROPANOPEUS HARISSI, *LIMULUS POLYPHEMUS
0499 " SUBLETHAL EFFECTS, PAH, HYDROCARBONS , CRUSTACEANS, RESPIRATION, *PHENANTHRENE, *RHITHROPANOPEUS HARRISII
0500 " HYDROCARBONS , CRUDE OIL, CHRONIC EFFECTS, BIRDS, UPTAKE
0508 " SUBLETHAL EFFECTS, MORTALITY, MOLLUSKS, DISPERSANTS, CRUDE OIL, BIOLOGICAL EFFECTS, *ARGOPECTEN IRRADIANS
0510 " SUBLETHAL EFFECTS, MORTALITY, MARINE ORGANISMS, HYDROCARBONS , CRUSTACEANS, ALASKA
0511 " MARINE ORGANISMS, INVERTEBRATES, INTERTIDAL ZONE, FUEL OIL, FISH, CRUDE OIL, BENTHOS, ALASKA , WSF, *PELAGIC ZONE
0524 " PETROLEUM PRODUCTS, FUEL OIL, DISPERSANTS, CRUDE OIL, CHEMICAL ANALYSIS, BIOLOGICAL EFFECTS
0561 " TANKERS, SOCIOECONOMIC EFFECTS, SHIPS, OIL SPILLS, MICROORGANISMS, MARINE ORGANISMS, LEGISLATION, EKOFISK BLOWOUT, ECOSYSTEMS, BIOLOGICAL EFFECTS, ARGO MERCHANT SPILL, WILDLIFE
0571 " SUBLETHAL EFFECTS, SAMPLING, ANALYTICAL TECHNIQUES, *LABORATORY DATA ANALYSIS, *FIELD APPLICATIONS
0576 " SPILL RESPONSE, PLANKTON, OIL SPILLS, MOVEMENT, MARINE MAMMALS, FISH, FATE, ENVIRONMENTAL EFFECTS, CONTINGENCY PLANNING, BIRDS, BIOLOGICAL EFFECTS, BEAUFORT SEA, *SCIENTIFIC RESPONSE
0613 " FISH, FATE, AROMATIC HYDROCARBONS, AQUATIC ENVIRONMENT, UPTAKE, *PNA

R032 TOXICITY, TEXAS, OCS, FISH, CRUDE OIL, CHRONIC EFFECTS, BIOLOGICAL EFFECTS, *HISTOPATHOLOGY, *SCIAENIDEA
R036 " SUBLETHAL EFFECTS, METABOLISM, MARINE ORGANISMS, HYDROCARBONS , FOOD WEB, FISH, DISPERSANTS, CHEMICAL ANALYSIS, BIOLOGICAL EFFECTS, BASELINE STUDIES, ALASKA , UPTAKE, *PATHOLOGY
R037 " REPRODUCTION, MONITORING, MARINE ENVIRONMENT, GROWTH, FISH, ENVIRONMENTAL EFFECTS, BIOLOGICAL EFFECTS, BEHAVIOR
R038 " SUBARCTIC REGIONS, NOAA, MARINE ORGANISMS, HYDROCARBONS , FATE, ENVIRONMENTAL EFFECTS, ECOSYSTEMS, BIOLOGICAL EFFECTS, ANALYTICAL TECHNIQUES
R044 " GREAT LAKES, ENVIRONMENTAL EFFECTS, BIOASSAY, AQUATIC ENVIRONMENT, WASTEWATERS
R047 " SAMPLING, HYDROCARBONS , DETECTION, CONCENTRATIONS, CARCINOGENS, BIOLOGICAL EFFECTS, ANALYTICAL TECHNIQUES
R061 " PETROCHEMICALS, OFFSHORE PRODUCTION, HYDROCARBONS , ECOSYSTEMS, DRILLING , BIOASSAY, *DRILLING MUDS
0433 TRANS-ALASKA PIPELINE, SPILL RESPONSE, SPILL CONTAINMENT, SPILL CLEANUP, RESTORATION, PIPELINES, INLAND, ICE, CONTINGENCY PLANNING, ALASKA
0461 " TANKERS, REGULATIONS, LIABILITY, LEGISLATION, INTERNATIONAL AGREEMENTS, ECONOMIC EFFECTS, US
0374 TROPICAL REGIONS, SEDIMENTS, SAMPLING, MODELS, HYDROCARBONS , CONCENTRATIONS, COASTAL WATERS, BERMUDA
0540 " SEDIMENTS, RESTORATION, RECOVERY, PUERTO RICO, ONSHORE IMPACTS, MONITORING, INTERTIDAL ZONE, ENVIRONMENTAL EFFECTS, CHROMATOGRAPHY, BIOLOGICAL EFFECTS, BIODEGRADATION
0403 UK, TOXICITY, SPILL CLEANUP, OIL SLICKS, ENVIRONMENTAL EFFECTS, DISPERSANTS, BEACHES, BEACH CLEANUP, ANALYTICAL TECHNIQUES, *LICENSING
0436 " SPILL RESPONSE, POLLUTION CONTROL, CONTINGENCY PLANNING
0463 " POLLUTION CONTROL, OIL SPILLS, LEGISLATION, ENVIRONMENTAL MANAGEMENT, COMPENSATION
0468 " TANKERS, POLLUTION PREVENTION, POLLUTION CONTROL, OIL DISCHARGES, GOVERNMENT AGENCIES
0620 " PLANKTON, NORTH SEA, HYDROCARBONS , FATE, *CHLOROPHYLL, *CARBON
0345 UPTAKE, TOXICITY, SOURCE IDENTIFICATION, MICROORGANISMS, DETECTION, CONTAMINATION, CONCENTRATIONS, BIOINDICATORS, *PROTOZOA
0346 " TOXICITY, MICROORGANISMS, DETECTION, CONTAMINATION, BIOINDICATORS, *PROTOZOA, *EUPLOTES DIADALEOS
0370 " SEDIMENTS, SAMPLING, PAH, OXIDATION, MARINE ORGANISMS, GC/MS, CHEMICAL ANALYSIS, AROMATIC HYDROCARBONS, AMOCO CADIZ SPILL, *MOUSSE
0480 " SEDIMENTS, RELEASE, HYDROCARBONS , AMPHIPODS, WSF, *NAPHTHALENES, *BIOMAGNIFICATION
0481 " SEDIMENTS, MARINE ORGANISMS, INVERTEBRATES, HYDROCARBONS , CRUDE OIL, CHRONIC EFFECTS, BIODEGRADATION, BENTHOS
0490 " RELEASE, METABOLISM, MARINE MAMMALS, HYDROCARBONS , CRUDE OIL, CONTAMINATION, ABSORPTION, *PHOCA HISPIDA
0500 " TOXICITY, HYDROCARBONS , CRUDE OIL, CHRONIC EFFECTS, BIRDS
0522 " GROWTH, FISH, DEVELOPMENT , CRUDE OIL, CHRONIC EFFECTS, BIOLOGICAL EFFECTS, BEHAVIOR, WSF, FISH, *PLATICHTHYS STELLATUS
0523 " POLYCHAETES, MOLLUSKS, MARINE ORGANISMS, INTERTIDAL ZONE, BIOLOGICAL EFFECTS, BIOASSAY
0613 " TOXICITY, FISH, FATE, AROMATIC HYDROCARBONS, AQUATIC ENVIRONMENT, *PNA
R030 " SEDIMENTS, RELEASE, PACIFIC COAST, MARINE ORGANISMS, HYDROCARBONS , GROWTH, ECOSYSTEMS, CRUDE OIL, CONCENTRATIONS, CHRONIC EFFECTS, BIOLOGICAL EFFECTS
R033 " REPRODUCTION, OIL SPILLS, FRESHWATER, ECOSYSTEMS, BIOMASS, BIOLOGICAL EFFECTS, ARCTIC, ALGAE, ALASKA , ZOOPLANKTON, *TUNDRA PONDS
R036 " TOXICITY, SUBLETHAL EFFECTS, METABOLISM, MARINE ORGANISMS, HYDROCARBONS , FOOD WEB, FISH, DISPERSANTS, CHEMICAL ANALYSIS, BIOLOGICAL EFFECTS, BASELINE STUDIES, ALASKA , *PATHOLOGY
0519 URQUIOLA SPILL, SPAIN, MORTALITY, MOLLUSKS, INVERTEBRATES, CRUDE OIL, COASTS, BIOLOGICAL EFFECTS, BENTHOS
0536 " OIL SPILLS, METULA SPILL, FATE, ENVIRONMENTAL EFFECTS, COASTAL WATERS, *VULNERABILITY INDEX
0654 " TANKERS, SPAIN
0458 US, REGULATIONS, OIL SPILLS, LEGISLATION, ECONOMIC EFFECTS, COST ANALYSIS, COMPENSATION, ALASKA
0461 " TRANS-ALASKA PIPELINE, TANKERS, REGULATIONS, LIABILITY, LEGISLATION, INTERNATIONAL AGREEMENTS, ECONOMIC EFFECTS
0473 " REGULATIONS, PORTS , POLLUTION CONTROL, INDUSTRIES, GOVERNMENT AGENCIES, ESTUARIES, ENVIRONMENTAL PROTECTION, DISPOSAL , DEVELOPMENT , WASTEWATERS
0574 " POLLUTION CONTROL, ESTUARIES, ENVIRONMENTAL EFFECTS, COASTAL ZONE MANAGEMENT, COASTAL WATERS, *PROCEEDINGS
0646 " OFFSHORE DEVELOPMENT, OCS, FISHERIES, FISH, ENVIRONMENTAL EFFECTS, *RESEARCH PROJECTS
0663 " TANKERS, SAFETY, REGULATIONS, POLLUTION PREVENTION, LEGISLATION, COMPENSATION
0664 " TANKERS, SAFETY, REGULATIONS, POLLUTION PREVENTION, LEGISLATION, GUIDELINES
0353 USCG, SURVEILLANCE, SANTA BARBARA CHANNEL, REMOTE SENSING, PLATFORMS, OIL SLICKS, NATURAL SEEPAGE, EQUIPMENT, DETECTION, CALIFORNIA, *RADAR SYSTEMS
0357 " TANKERS, SURVEILLANCE, SHIPS, REMOTE SENSING, POLLUTION CONTROL, MONITORING, LAW ENFORCEMENT, EQUIPMENT, *AIREYE SYSTEM

0377 USCG, SOURCE IDENTIFICATION, OIL SPILLS, LIABILITY, COMPENSATION, CHEMICAL ANALYSIS
0396 " SPILL CONTAINMENT, RIVERS, ICE, DESIGN-ENGINEERING, BOOMS, *CANADIAN COAST GUARD
0408 " SPILL REMOVAL, SPILL DISPOSAL, EQUIPMENT, DESIGN-ENGINEERING, *DEBRIS DISPOSAL SYSTEMS
0411 " SPILL RESPONSE, SPILL CLEANUP, INFORMATION SYSTEMS, EQUIPMENT
0413 " SPILL CLEANUP, SKIMMERS, EQUIPMENT, EPA, DESIGN-ENGINEERING, BOOMS, *PERFORMANCE TESTING, *OHMSETT FACILITY
0424 " TANKERS, SPILL RESPONSE, SPILL CLEANUP, SANSINENA SPILL, HARBORS, EQUIPMENT, CALIFORNIA
0431 " SPILL RESPONSE, SHIPS, RIVERS, POLLUTION CONTROL, OIL REMOVAL, MISSISSIPPI RIVER, ICE, EQUIPMENT
0435 " SPILL RESPONSE, SPILL CLEANUP, POLLUTION CONTROL, GOVERNMENT AGENCIES, CONTINGENCY PLANNING, *NATIONAL RESPONSE CENTER
0449 " SUBARCTIC REGIONS, SPILL RESPONSE, SPILL CLEANUP, ICE, BEHAVIOR, ARCTIC, ALASKA ,EQUIPMENT
0450 " TANKERS, SPILL RESPONSE, SPILL CLEANUP, MASSACHUSETTS, LIABILITY, GOVERNMENT AGENCIES, CONTINGENCY PLANNING, *GLOBAL HOPE SPILL
0657 " SPILL RESPONSE, SPILL CLEANUP, PORTS , OIL TRANSPORT, OIL TERMINALS, INDUSTRIES, GOVERNMENT AGENCIES, CONTINGENCY PLANNING, ALASKA , *PORT VALDEZ
0662 " TANKERS, STATISTICS, SHIPS, SAFETY, REGULATIONS, PORTS , LAW ENFORCEMENT
0665 " TANKERS, SAFETY, REGULATIONS, LAW ENFORCEMENT, ALASKA , US GOVERNMENT, *VESSEL TRAFFIC SERVICE
0462 US GOVERNMENT, SPILL CLEANUP, LIABILITY, LEGISLATION, COST ANALYSIS
0551 " SPILL CLEANUP, OIL SPILLS, LIABILITY, LEGISLATION, COMPENSATION
0556 " LIABILITY, LEGISLATION, FISHERIES, COMPENSATION, ALASKA
0558 " REGULATIONS, LIABILITY, LEGISLATION, INTERNATIONAL AGREEMENTS, INSURANCE
0559 " STATE GOVERNMENTS, MARINE ENVIRONMENT, LIABILITY, LEGISLATION, ALASKA
0665 " USCG, TANKERS, SAFETY, REGULATIONS, LAW ENFORCEMENT, ALASKA , *VESSEL TRAFFIC SERVICE
0659 USN, STORAGE, REGULATIONS, POLLUTION PREVENTION, OIL TANKS, INLAND, EPA, CONTINGENCY PLANNING, COASTS
R029 " SHIPS, SEA SURFACE, POLLUTION CONTROL, *AIR-SEA INTERFACE
0475 USSR, SPILL CLEANUP, REGULATIONS, LEGISLATION, LAW ENFORCEMENT, GOVERNMENT AGENCIES, FOREIGN GOVERNMENTS, EQUIPMENT, CONTINGENCY PLANNING, BLACK SEA
0563 " SWEDEN, SOURCE IDENTIFICATION, PHYTOPLANKTON, FISH, FINLAND, CONCENTRATIONS, BIOLOGICAL EFFECTS, BALTIC SEA, ANALYTICAL TECHNIQUES, *TAGGING
0539 VEGETATION, PUERTO RICO, ENVIRONMENTAL EFFECTS, ECOSYSTEMS, CORAL REEFS, COASTAL WATERS, *RHIZOPHORA MANGLE, *VULNERABILITY
0669 WASHINGTON, REFINERIES, PUGET SOUND, PETROLEUM PRODUCTS, CRUDE OIL, CHEMICAL ANALYSIS, WASTEWATERS,DISPOSAL
R018 " SEDIMENTS, PUGET SOUND, DETECTION, CONTAMINANTS, CHEMICAL ANALYSIS, AROMATIC HYDROCARBONS
R069 " STATISTICAL ANALYSIS, RESOURCE MANAGEMENT, PUGET SOUND, NEW YORK, INFORMATION SYSTEMS, *MESA
0671 WASTE OIL, SLUDGE , LAND FARMING, DISPOSAL , BIODEGRADATION
0673 " REUSE, RECYCLING, RECLAMATION, CRANKCASE OIL, CONSERVATION
0372 WASTEWATERS, SPECTROSCOPY, INDUSTRIES, CHEMICAL ANALYSIS
0375 " OIL-WATER SEPARATION, DETECTION, CHEMICAL ANALYSIS, ANALYTICAL TECHNIQUES, *IR
0470 " REFINERIES, POLLUTION CONTROL, OIL DISCHARGES, MONITORING, DETECTION, *RADIOTRACER TECHNIQUES
0473 " US, REGULATIONS, PORTS , POLLUTION CONTROL, INDUSTRIES, GOVERNMENT AGENCIES, ESTUARIES, ENVIRONMENTAL PROTECTION, DISPOSAL , DEVELOPMENT
0628 " POLLUTION CONTROL, OIL DISCHARGES, LEGISLATION, INDUSTRIES, ECONOMICS, COST ANALYSIS
0669 " WASHINGTON, REFINERIES, PUGET SOUND, PETROLEUM PRODUCTS, CRUDE OIL, CHEMICAL ANALYSIS,DISPOSAL
R010 " POLLUTION CONTROL, HYDROCARBONS , DETECTION, BILGES, BACTERIA, *ENZYME ELECTRODE
R044 " TOXICITY, GREAT LAKES, ENVIRONMENTAL EFFECTS, BIOASSAY, AQUATIC ENVIRONMENT
R062 " REFINERIES, POLLUTION CONTROL, MONITORING, HYDROCARBONS , WATER QUALITY, *THERMAL OIL RECOVERY
R064 " REFINING, POLLUTION CONTROL, OIL SHALE, BIOLOGICAL TREATMENT, AROMATIC HYDROCARBONS
R067 " REFINING, POLLUTION PREVENTION, POLLUTION CONTROL, FILTRATION, *MICELLAR FLOODING, *SULFONATES
0667 WASTEWATER TREATMENT, SLUDGE , REUSE, PATENT, OIL-WATER SEPARATION, GRAVITY SEPARATION
0668 " OIL REMOVAL, MONITORING, HYDROCARBONS , GRAVITY SEPARATION, FLOCCULATION, BALLAST , AROMATIC HYDROCARBONS, ANALYTICAL TECHNIQUES, ALASKA
0670 " SOLID WASTES, REFINERIES, POLLUTION CONTROL, PETROCHEMICALS, EQUIPMENT, ECONOMICS, DISPOSAL
0679 " POLLUTION CONTROL, OIL SHALE, DEVELOPMENT , *RESARCH PROJECTS
R065 " REFINING, POLLUTION CONTROL, ILLINOIS, CONTAMINANTS, *INDIANA
R066 " REFINERIES, GC/MS, EPA, DOE, CHEMICAL ANALYSIS, ACTIVATED SLUDGE, *ACTIVATED CARBON
0354 WATER QUALITY, SOURCES, REMOTE SENSING, OIL DISCHARGES, ENVIRONMENTAL DETERIORATION, DETECTION, *HONG KONG
0369 " SOURCES, JAPAN, CONTAMINANTS, CHEMICAL ANALYSIS, BAYS
0537 " RESTORATION, RECOVERY, OIL SPILLS, LEAKAGE, JAPAN, FUEL OIL, FISHERIES

0609 WATER QUALITY, OIL SPILLS, OFFSHORE DEVELOPMENT, OCS, MODELS, GROUNDWATER, ESTUARIES, ENVIRONMENTAL EFFECTS, ECONOMICS
0622 " SANSINENA SPILL, INCINERATION, HARBORS, FUEL OIL, FATE, CALIFORNIA, BIOLOGICAL EFFECTS
R062 " WASTEWATERS, REFINERIES, POLLUTION CONTROL, MONITORING, HYDROCARBONS , *THERMAL OIL RECOVERY
0376 WEATHERING, STRAIT OF MAGELLAN, SEDIMENTS, SAMPLING, ONSHORE IMPACTS, OIL SPILLS, METULA SPILL, GC/MS, CONCENTRATIONS, CHILE, CHEMICAL ANALYSIS, BIOLOGICAL EFFECTS
0378 " SPECTROSCOPY, SOURCE IDENTIFICATION, SAMPLING, NATURAL SEEPAGE, CHEMICAL ANALYSIS, ANALYTICAL TECHNIQUES
0414 " TOXICITY, SPILL CLEANUP, OIL SLICKS, FATE, DISPERSANTS
0583 " SPREADING, SEA SURFACE, NORTH SEA, FATE, EKOFISK BLOWOUT, DRIFT, STATISTICAL ANLYSIS
0591 " SHIPS, SAMPLING, ICE, HYDROCARBONS , FUEL OIL, EVAPORATION, CHROMATOGRAPHY, CHEMICAL ANALYSIS, BUZZARDS BAY, BOUCHARD 65 SPILL
0616 " SOLUTION, SEDIMENTATION, MARINE ENVIRONMENT, HYDROCARBONS , FUEL OIL, FATE, EVAPORATION, CHROMATOGRAPHY, BIODEGRADATION, ANALYTICAL TECHNQIUES
R017 " SURVEILLANCE, REMOTE SENSING, OIL SPILLS, MONITORING, DETECTION, CRUDE OIL, ANALYTICAL TECHNIQUES, *AGING
0560 WILDLIFE, ST. LAWRENCE RIVER, SPILL CLEANUP, SHIPS, MARSHES, FISH, ENVIRONMENTAL EFFECTS, BAYS, *NEPCO 140 SPILL
0561 " TOXICITY, TANKERS, SOCIOECONOMIC EFFECTS, SHIPS, OIL SPILLS, MICROORGANISMS, MARINE ORGANISMS, LEGISLATION, EKOFISK BLOWOUT, ECOSYSTEMS, BIOLOGICAL EFFECTS, ARGO MERCHANT SPILL
0651 " RESOURCE MANAGEMENT, EXPLORATION , ENVIRONMENTAL PROTECTION, ENVIRONMENTAL DETERIORATION, DEVELOPMENT
0360 WSF, TANKERS, SOURCES, SEDIMENTS, SEA SURFACE, PAH, MARINE ORGANISMS, HYDROCARBONS , GEORGES BANK, GC/MS, CHEMICAL ANALYSIS, BIOGENIC HYDROCARBONS, BENTHOS, ARGO MERCHANT SPILL, ZOOPLANKTON
0480 " UPTAKE, SEDIMENTS, RELEASE, HYDROCARBONS , AMPHIPODS, *NAPHTHALENES, *BIOMAGNIFICATION
0489 " REPRODUCTION, MORTALITY, METABOLISM, GROWTH, CRUSTACEANS, CRUDE OIL, CONCENTRATIONS, BIOLOGICAL EFFECTS, *CRANGON CRANGON
0494 " TOXICITY, SUBLETHAL EFFECTS, MOLLUSKS, FUEL OIL, BEHAVIOR, *FEEDING, *CHEMORECEPTION, *ILYANASSA OBSOLETA
0495 " REPRODUCTION, FISH, CRUDE OIL, BIOLOGICAL EFFECTS, BARENTS SEA, *HATCHING
0498 " TOXICITY, SUBLETHAL EFFECTS, MORTALITY, METABOLISM, GROWTH, FUEL OIL, DEVELOPMENT , AROMATIC HYDROCARBONS, RESPIRATION, *RHITHROPANOPEUS HARISSI, *LIMULUS POLYPHEMUS
0511 " TOXICITY, MARINE ORGANISMS, INVERTEBRATES, INTERTIDAL ZONE, FUEL OIL, FISH, CRUDE OIL, BENTHOS, ALASKA , *PELAGIC ZONE
0517 " METABOLISM, GROWTH, CRUDE OIL, BIOLOGICAL EFFECTS, ALGAE, *NAPHTHALENES, *CHLAMYDOMONAS ANGULOSA
0522 " UPTAKE, GROWTH, FISH, DEVELOPMENT , CRUDE OIL, CHRONIC EFFECTS, BIOLOGICAL EFFECTS, BEHAVIOR, FISH, *PLATICHTHYS STELLATUS
0360 ZOOPLANKTON, WSF, TANKERS, SOURCES, SEDIMENTS, SEA SURFACE, PAH, MARINE ORGANISMS, HYDROCARBONS , GEORGES BANK, GC/MS, CHEMICAL ANALYSIS, BIOGENIC HYDROCARBONS, BENTHOS, ARGO MERCHANT SPILL
0513 " OIL SPILLS, HYDROCARBONS , ESTUARIES, DISTRIBUTION, BIOMASS, BIOLOGICAL EFFECTS
0514 " MICROORGANISMS, FUNGI, FRESHWATER, DISPERSANTS, BIOLOGICAL EFFECTS, BACTERIA
0538 " TANKERS, MASSACHUSETTS, MARINE ORGANISMS, FISH, ENVIRONMENTAL EFFECTS, BENTHOS, ARGO MERCHANT SPILL
0550 " SHIPS, PHYTOPLANKTON, OIL TRANSFER, DELAWARE BAY, BENTHOS, BASELINE STUDIES
R033 " UPTAKE, REPRODUCTION, OIL SPILLS, FRESHWATER, ECOSYSTEMS, BIOMASS, BIOLOGICAL EFFECTS, ARCTIC, ALGAE, ALASKA , *TUNDRA PONDS

AUTHOR INDEX

ABECASSIS, D.W. 0457
ACKERMAN, R. R022
ACKERMAN, R. R023
ACUFF, J.T. 0428
ADDY, J.M. 0343
AHERN, J.F. 0631
AHERN, T.P. 0593
AHMADJIAN, M. 0358
AHMADJIAN, M. 0362
ALBERTS, D.A. 0430
ALDRIDGE, A.K. 0618
ALEXANDER, M.M. 0560
ALLEN, A.A. 0399
ALLEN, J. 0594
ALLEN, T.E. 0442
AMER INST BIO SCI 0561
AMERADA HESS CORP 0382
AMOCO 0632
ANDERSON, J.W. R030
ANDERSON, J.W. 0480
ANDERSON, J.W. 0481
ANDERSON, J.W. 0523
ANDERSON, R.C. 0530
API 0673
ARMSTRONG, G.L. 0619
ATLAS, R.M. R049
ATLAS, R.M. 0485
ATWATER, S.G. 0353
AUDUNSON, T. 0583
AVERILL, W. 0359
AYERS, R.W. 0482
BACKLUND, L. 0349
BAILEY, J.R. 0431
BAKKE, T. 0483
BALLAST-NEDAM GROEP 0400
BARBASH, J.E. 0374
BARGER, W.R. R029
BARNES, P. R039
BAYLISS, R. 0657
BAZHASHVILI, T.R. 0502
BEAN, R.M. R030
BEAN, R.M. 0481
BECK, D.A. 0627
BECKETT, C.J. 0401
BEERS, J. 0501
BELLIER, P. 0402
BENSON, A.A. 0347
BENSON, A.A. 0512
BENTZ, A.P. 0377
BHATTACHARYA, L. 0577
BIERI, R.H. 0584
BIGGS, R.B. 0633
BIRCHARD, E.C. 0542
BISHNOI, P.R. 0595
BLACKMAN, R.A.A. 0403
BLAYLOCK, J.W. 0480
BLAYLOCK, J.W. 0481
BLUS, L.J. 0484
BOCARD, C. 0404
BOEHM, P.D. 0360
BOUCHER, J. 0513
BOWMAN, N.J. R056
BOXER, B. 0432
BRADY, M. 0358
BRANDAL, P.O. 0361
BRICE, R.M. R047
BRIGHT, D. 0596
BRIGHT, T.J. R031
BRITISH PETROLEUM CO 0383
BRITISH PETROLEUM CO 0384
BRITISH PETROLEUM CO 0667
BRODSKY, A.Z. 0387
BROOKS, P.W. 0618
BROWN, C. 0358
BROWN, C. 0362
BROWN, C. 0366
BROWN, L.R. 0506
BROWN, L.R. 0562
BROWN, L.R. 0601
BROWN, R.A. 0363
BROWN, R.A. 0613
BUCKLEY, J. 0614
BUHITE, T.R. 0433
BURRELL, D.C. 0640
BUSDOSH, M. 0485
BUTLER, J.N. 0374
BYROADE, J.D. R026
CAHILL, E.J. 0458
CAILLOUET, C.W. R045
CANEVARI, G.P. 0425
CARLBERG, S.R. 0563
CARSIN, J.L. 0364
CARVEN, C.J. 0660
CASBLE, R.W. 0434
CHAKRABARTY, A.M. R050
CHAKRABARTY, A.M. 0579
CHARLES, M.E. 0387
CHARLTON, T.J. 0630
CHEATHAM, D.L. 0373
CHEN, K.W. 0385
CHERIAN, M. 0588
CHRISTENSEN, R.G. 0365
CLEMENT, W.H. R021
CLEMENTS, E. 0659
CLINE, J.D. R054
CLOW, J.R. 0435
COASTAL ENVIRONMENTS, INC 0635
COASTAL RESOURCES CTR 0649
COCCETTI, G.F. 0486
COHEN, M.H. 0522
COHEN, S.H. 0386
COLEMAN, H.J. R020
COLWELL, R.R. R051
CONOVER, S.A.M 0542
CONSERVATION FOUNDATION 0636
CONWAY, D.V.P. 0620
COOLEY, J.F. 0540
CORMACK, D. 0405
CORNELIUS, S. 0570
CORNER, E.D.S. 0487
CORNETT, D.E. 0551
CORNILLON, P. 0589
CORNILLON, P. 0597
CORNILLON, P.C. 0598
COUPER, F.E. 0552
COWELL, E.B. 0344
COWELL, E.B. 0534
COX, G.V. 0534
COX, R.G. 0599
CROFT, C. 0661
CRONIN, L.E. 0564
CROQUETTE, J. 0404
CROSWELL, W.F. 0350
CUEMEN, M.K. 0584
D'OZOUVILLE, L. 0586
D'OZOUVILLE, L. 0587
DALE, D. R069
DANIEL, J.Y. 0513
DAVIS, P.H. 0518
DAVIS, W. R046

DAWSON, B.H. R064
DAWSON, J.R. 0622
DE BORGER, R. 0581
DEBORD, F.W. 0449
DENOVILLE, R.C. 0553
DEPT OF ENVIRONMENT, UK 0468
DEPT OF TRADE, UK 0436
DESLAURIERS, P.C. 0585
DEWLING, R.T. 0406
DI PIETRO, N.D. 0599
DOBRA, K.W. 0485
DONOGHUE, N.A. 0578
DOOLEY, D. 0554
DOTTO, L. 0351
DRAKE, D. R039
DRISCOLL, W.J. 0655
DUBEY, R.A. 0459
DUBEY, R.A. 0555
DUBIEL, E.J. 0460
DUERDEN, F.C. 0427
DUNNETT, G.M. 0534
DUTKA, B.J. 0514
EASTIN, W.C. 0488
EASTWOOD, D. 0378
ECKER, W.J. 0662
EDIGER, D. 0437
EDWARDS, R.R.C. 0489
EIDAM, C. 0419
ELLIS, J. 0461
ENGELHARDT, F.R. 0490
ENGELMANN, R.J. 0543
ESTES, J.E. 0353
EVANS, J.A. 0462
EVERICH, D. 0497
EXXON PROD RES 0672
FARLOW, J. 0668
FARLOW, J.S. R024
FARMER, J. 0525
FARRINGTON, J.W. R060
FARRINGTON, J.W. 0615
FAUST, S.D. R021
FEELY, R.A. R054
FIDELL, E.R. 0459
FIDELL, E.R. 0555
FIEST, D.L. 0360
FINDL, E. R010
FIORITO, B.J. 0500
FISKEN, W.L.N. 0657
FITZMAURICE, V. 0463
FLAGG, L.B. 0544
FRANK, U. 0379
FRANKLIN, F.L. 0403
FRASER, J.P. 0469
FREESTONE, F.J. 0630
FRICKE, P. 0529
FRIEDLANDER, D. R057
FRIEDMAN, A.J. 0591
FRIELLO, D.A. 0579
FRIES, B.A. 0470
FUNATANI, C. 0467
GALLAGHER, J. 0456
GAREY, W.F. R034
GARNETT, M.J. 0455
GAROFALO, G. 0508
GARRETT, W.D. R029
GEARIN, L.F. 0663
GEARING, J.N. 0616
GEARING, P.J. 0616
GEN FISH COUNC FOR MEDIT 0565
GEORGIA DEPT NAT RESOURCES 0637
GETMAN, J. R024
GILCHRIST, R. R027
GILL, S.D. 0407
GILL, S.D. 0438
GISSBURG, J.G. 0556
GLADDEN, J.W., JR. 0650
GOERING, J.J. 0641
GOLDFARB, D. 0358
GOLDFARB, D. 0366
GOODWIN, G.L. 0471
GOULD, J.R. 0503
GRAHL-NIELSEN, O. 0361
GRAHL-NIELSEN, O. 0367
GRAHL-NIELSEN, O. 0566
GRAHL-NIELSEN, O. 0617
GRAHL-NIELSEN, O. 0638
GRANT, D.F. 0378
GREENBURG, E.V.C. 0664
GREENE, G. 0542
GREENE, G.D. 0387
GRIFFIN, M. 0578
GRIFFITHS, R.A. 0606
GRUENFELD, M. 0379
GRUGER, E.H. R036
GUNDLACH, E.R. 0519
GUNDLACH, E.R. 0586
GUNDLACH, E.R. 0587
GUNNERSON, C.G. 0567
GUNNERSON, C.G. 0652
HABERCOM, G.E., JR. 0656
HADEAU, S. 0590
HAENSLY, W.E. R032
HALEY, G.P. 0458
HANLON, J.R. 0451
HANN, R.W. 0535
HANN, R.W. 0557
HANN, R.W. 0568
HANN, R.W., JR. 0439
HANSEN, K. 0598
HANSEN, W.G. 0408
HANSEN, W.G. 0659
HARDY, R. 0525
HARDY, R. 0620
HARRIS, R.P. 0487
HARRISON, E.A. 0491
HARRISON, W. R065
HART, J.W. 0440
HARTLEY, J.P. 0343
HARTWICK, N.J.R. 0409
HAWKES, J.W. 0492
HAY, K.G. 0639
HAYES, J.B. 0665
HAYES, M.O. 0519
HAYES, M.O. 0536
HAYES, M.O. 0586
HAYES, M.O. 0587
HECKLY, R.J. R048
HEDGPETH, J.W. 0569
HELLEBUST, J.A. 0493
HELLEBUST, J.A. 0517
HELLER, B. 0558
HERRE, B.H. 0423
HESS, K.W. 0600
HILL, S. 0546
HIYAMA, Y. 0537
HOBBIE, J.E. R033
HODGINS, H.O. R036
HOFFMAN, D.J. 0488
HOFFMAN, J. 0447
HOFFMAN, J.M. 0441
HOFFMANN, E.J. 0464
HOLLAND, J.S. 0570
HOLLIDAY, G.H. 0422
HOLMES, J.P. 0500
HOLT, S. 0570
HOOD, D.W. 064
HOOD, D.W. 0640
HOROWITZ, A. 0485
HOVIS, W.A. R017
HUBBARD, J.F. 0442

HUH, C. 0599
HUTCHINSON, J.H. 0410
HUTCHINSON, T.C. 0493
HUTCHINSON, T.C. 0517
HYLAND, J.L. 0494
IMBRIE, R.J. 0411
INHABER, H. 0674
INTERGOV OCEANOGRAPHIC COMM 0545
ISMAIL, N. 0388
JANSON, J.J. 0412
JASPER, W. 0588
JENKINS, R.G. 0380
JENSEN, J.R. 0353
JOHANNESSEN, K.I. 0495
JOHNSEN, T.M. 0483
JOHNSON, J.H. 0618
JOHNSON, R.A. 0601
JUHASZ, F. 0472
KAMADA, M. 0369
KARGOPOLOVA, I.N. 0496
KARINEN, J.F. 0511
KARINEN, J.F. 0571
KARNAUKHOV, V.N. 0496
KARRICK, N.L. R036
KARWAN, K.R. 0411
KAZMIERCZAK, L.J. 0443
KEITH, V.F. 0602
KEIZER, P.D. 0593
KENNEDY, D. R028
KERR, C.L. 0600
KERWIN, J.A. 0484
KETCHUM, B.H. 0465
KEYES, S.W., JR. 0546
KIESSER, S.L. 0480
KIESSER, S.L. 0481
KIM, T. 0588
KLEMAS, V. 0352
KNAUSS, P. 0493
KNOLL, J. R017
KOLPACK, R.L. 0619
KONIGSBERG, D. 0589
KOONS, C.B. 0363
KOONS, C.B. 0368
KOOYMAN, G.L. R034
KOPECK, J.T. 0424
KOTOV, A.M. 0502
KOVACS, A. R055
KOVACS, A. R059
KOVALEVA, G.I. 0502
KRAUS, S.P. 0353
KRUEGER, R.B. 0466
KUHNHOLD, W.W. 0497
KUHNHOLD, W.W. 0538
LADNER, C.M. 0506
LAKE, J. R019
LAKE, J. 0497
LANFEAR, K.J. R040
LANGLOIS, E. 0473
LANIER, J.J. 0345
LANIER, J.J. 0346
LASETER, J.L. 0370
LASETER, J.L. 0500
LATHE, D.C.C. 0409
LAUGHLIN, R.B. 0499
LAUGHLIN, R.B., JR. 0498
LAW, E.F. R069
LAWLER, G.C. 0500
LEE, R.F. 0501
LEFEVRE, J. 0513
LEIBOVICH, S. 0389
LEVELL, D. 0343
LEWIS, R.E. 0429
LIBRARY OF CONGRESS 0642
LICHTE, H.W. 0413
LIGHT, M. 0345
LIGHT, M. 0346
LIN, J.-T. 0527
LINDBLOM, G.P. 0444
LINDENMUTH, W.T. 0386
LINDMARK, D.G. R035
LINDSTEDT-SIVA, J. 0426
LINDSTEDT-SIVA, J. 0445
LISSAUER, I.M. 0446
LISSAUER, I.M. 0603
LIU, H.-T. 0527
LO, C.P. 0354
LONGABUCCO, P. 0560
LOPEZ, J.M. 0539
LUKER, R.A. 0628
LUND, H.F. 0474
LUNDT, E.A. 0659
LYNCH, P. 0358
LYNCH, P. 0362
LYSIAK, E. 0572
LYSYI, I. 0668
MACKAY, D. 0387
MACKAY, D. 0493
MACKAY, D. 0590
MACKIE, P.R. 0525
MACKIE, P.R. 0620
MACLEOD, W. R018
MACLEOD, W.D., JR. 0380
MACLEOD, W.D., JR. 0591
MAHMOOD, A. 0629
MAINI, B.B. 0595
MALINKY, G. 0604
MALINS, D.C. R036
MALONEY, R. 0509
MANSFIELD, B. 0441
MANSFIELD, B. 0447
MANUELL, R.W. 0448
MARSH, G.D. 0449
MASSART, G. 0402
MASSIN, J.M. 0355
MATHEWS, K.W. 0450
MATSUDA, T. 0580
MATTSON, J. 0381
MAURER, D. 0550
MAXWELL, R.D. R024
MAY, M.E. 0476
MAY, W.E. 0365
MAYER, F.L. R011
MAYO, D.W. 0540
MAZMANIDI, N.D. 0502
MCAULIFFE, C.D. 0414
MCCLELLAND, J.J., JR. 0475
MCCRACKEN, W.F. 0630
MCINTYRE, A.D. 0620
MCKAY, G. R012
MEADE, N.F. 0530
MEADOW, H.M. 0629
MEIKLE, K.M. 0415
MELTEFF, B. 0643
MELVOLD, R. 0668
MERTENS, E.W. 0503
MEYERS, F. 0390
MICHEL, J. 0586
MILAN, C.S. 0504
MILEIKOVSKII, S.A. 0505
MILLER, D.C. 0494
MILLER, W. R063
MILOVIDOVA, N.Y. 0496
MINCHEW, C.D. 0506
MITCHELL, R. R012
MITRE CORP 0675
MOAL, J. 0513
MOELLER, P.J. 0627
MOLES, A. 0511
MONK, D.C. 0344
MOORE, R.K. R015

MORRIS, R.J. 0531
MORRISON, C.D. 0676
MORSE, R.W. 0644
MORSON, B. 0507
MOSESMAN, N. 0360
MUELLER, E.W. 0559
MUNJKO, I. 0677
MURAKAMI, A. 0580
MURPHY, B.L. 0605
MURPHY, D.L. 0446
MURPHY, D.L. 0603
MYLROIE, J.R. 0579
NADEAU, R.J. 0416
NADEAU, R.J. 0451
NAGASAWA, S. 0580
NAGY, E. 0514
NAKASSIS, A. R040
NATL RESEARCH DEVELOP CORP 0417
NEFF, J.M. 0499
NEFF, S.E. 0485
NEIHOF, R.A. 0476
NEPPELBERG, O. 0361
NEPPELBERG, T. 0566
NEPPELBERG, T. 0638
NEUMAN, L.D. 0547
NEW ENGLAND RIV BASIN COMM 0645
NG, C. 0590
NICHOLS, J.A. 0455
NORBON, M.G. 0403
NORCOR ENGINEEER & RESEARCH 0356
NORRIS, D.B. 0578
NORTH CAROLINA DEPT OF ADMIN 0548
NORWOOD, C. R019
OBERHOLTZER, G.R. 0428
OCEANOGR INST OF WASHINGTON 0669
OGURI, M. 0622
OLIVER, J.D. R052
OLLA, B. R037
OLSEN, S.B. 0647
ONISHI, T. 0369
ORDZIE, C. 0508
OTIS ENGINEERING CORP 0477
OVERTON, E.B. 0370
OZKAYNAK, H. 0605
PAGE, D.S. 0540
PALM, D.J. 0532
PALMORK, K.H. 0566
PALMORK, K.H. 0638
PALMORK, T. 0361
PARKER, H. 0405
PATEL, J.R. 0370
PATTISON, M.L. 0625
PAVLETIC, Z. 0677
PAYNE, J.F. 0509
PAYNE, J.L. 0429
PECHAN, E.H. 0628
PERKINS, G.G. 0657
PETER, G. 0652
PETERSON, H.K. 0621
PETROL INST ENV CONSERV EXEC 0478
PHILLIPS, D. 0560
PIERCE, W.L. 0427
PIJANOWSKI, B. R013
PLAGE, W.E. 0357
POLEY, J.P. 0452
POLIS, D.F. 0352
POLLACK, A.M. 0453
PREUS, P. 0391
PREUS, P. 0392
PRICE, R.I. 0653
PRITCHARD, H. R053
PROHASKA, P.G. 0591
PROPP, C.F. 0418
PURDY, H.A. 0657
QUAM, H.A. 0395
QUINN, J.G. 0616
QUIROGA, H. 0654
RABALAIS, N. 0570
RABALAIS, S. 0570
RAHIMTULA, A. 0509
RAJ, P.P.K. 0606
RAKOWSKA, E. 0572
RANDALL, R.C. R047
RAPHAELIAN, L.A. R066
REED, M. 0607
REED, M. 0608
REIMNITZ, E. R039
RENAULT, P. 0404
RES & PLAN CONS 0609
RES EDUC ASSOC 0670
RESEARCH & PLANNING CONSULT 0549
RICE, S.D. 0373
RICE, S.D. 0510
RICE, S.D. 0511
RICHARDS, N. R061
RIDLON, J. R069
RILEY, P. 0481
RILEY, R.G. R030
RISEBROUGH, R.W. R041
RIZKALLA, A.S. 0612
ROBERTS, W.R. 0650
ROBERTSON, J.B. R058
ROGERSON, P. R019
ROHDE, K.H. 0371
ROMMEL, G.W. 0347
ROMMEL, G.W. 0512
ROSS, D.E. 0408
ROSS, S.L. 0393
ROSSI, S.S. 0347
ROSSI, S.S. 0512
ROWLAND, S.J. 0618
ROYER, T.C. 0610
RUDLING, L. 0348
RUSHWORTH, R. 0668
RYAN, W. 0407
SAHOTA, H.S. 0612
SAILA, S.B. 0647
SAKAMOTO, H. 0369
SAMAIN, J.F. 0513
SAMUELS, W. R040
SANCRANT, R.J. 0662
SCHIMMEL, S. R061
SCHMIDT, R.E. 0357
SCHOEN, C. R040
SCHRIER, E. 0419
SCHRIER, E. 0434
SCHULTZ, L.A. 0449
SCHWARTZ, S.H. 0420
SCOTT, B.F. 0514
SCOTT, B.F. 0515
SEARD, T.D. 0363
SEXTON, W.J. 0586
SHARKEY, A.J. 0372
SHAW, D. R042
SHAW, D. 0604
SHAW, D.G. 0516
SHERRY, J.P. 0514
SHINDLER, D.B. 0515
SHIPMAN, E.D. 0454
SHORT, J.W. 0373
SHUFFMAN, O. 0393
SHUFFMAN, R. 0393
SILI, P. R068
SILVA, C.C. 0406
SIMMONS, G.M. 0629
SIMMONS, R.G. 0427
SINCLAIR, J.R. 0408
SITTIG, M. 0666
SJUNTORP, A.B. 0394
SKINNER, R.G. 0421

SLEETER, T.D. 0374
SMART, D.R. 0522
SMITH, D.D. 0422
SMITH, K.A. 0646
SMITH, L.R. 0458
SMITH, S.L., JR. 0377
SOBOT, S. 0677
SOMERVILLE, H.J. 0582
SORENSEN, E. 0540
SOTO, C. 0517
SOULE, D.F. 0622
SOUTHWARD, A.J. 0541
SPAULDING, M. 0597
SPAULDING, M.L. 0598
SPAULDING, M.L. 0607
SPAULDING, M.L. 0608
SPIES, R.B. 0518
STAINKEN, D. 0379
STAMOUDIS, V.C. 0584
STANSBY, M.E. 0528
STEARNS, R.W. 0619
STEGEMAN, J.J. 0497
STEIN, R.J. 0519
STEINHAUER, W.G. 0360
STENDELL, R.C. 0484
STILINOVIC, B. 0677
STILLWAUGH, S. R069
STOLZENBACH, K.D. 0453
STRAUGHAN, D. 0520
STRAUGHAN, D. 0521
STRAUGHAN, D. 0623
STRINGER, W.J. R016
STUERMER, D.H. 0518
SUFFET, I.H. 0592
SZARO, R.C. 0500
TAGATZ, S. R061
TAKAHASHI, M. 0501
TAM, D. 0493
TAYLOR, T.L. 0511
TEAL, J.M. R060
TEAL, J.M. 0573
TELFORD, A.S. 0395
TELFORD, A.S. 0542
TEXAS A & M UNIV 0648
THANARAJAH, J.C.M. 0594
THERY, I.P. R068
THOMAS, J.P. 0368
THOMAS, L.C. 0380
THOMPSON, J.H. R031
THOMPSON, R.E. R067
TOKYO UNIV OF FISHERIES 0533
TRAMIER, B. R068
TRAXLER, R. 0508
TRAXLER, R. 0577
TRUDGILL, P.W. 0578
TSAHALIS, D.T. 0611
TSANG, G. 0396
TSANG, G. 0397
TUFFLY, B. R062
TUPPER, F. 0678
UNIROYAL, INC 0398
UNIV OF RHODE ISLAND 0649
US BLM 0634
US DOE 0679
US EPA 0375
US EPA 0574
UYEDA, M.Y. 0380
UYEDA, M.Y. 0591
VANDERHORST, J.R. 0523
VANDERKOOY, N. 0396
VANDERMEULEN, J.H. 0593
VANLOOCKE, R. 0581
VEDROS, N.A. R048
VENEZKY, D.L. R014
VENKATESH, K. 0612
VERLINDE, A. 0581
VERNBERG, F.J. 0575
VERSTRAETE, W. 0581
VILLAUME, J.F. 0423
VOLLMARS, R.R. 0353
VORBACH, J.E. 0631
VOYKIN, D.P. 0423
WADE, T. 0616
WAHLGREN, M.A. R044
WALLS, R.W. 0650
WARNER, J.S. 0376
WATANABE, N. 0580
WATKINSON, R.J. 0582
WATLING, L. 0550
WATSON, A. 0590
WEBER, D.D. R036
WEEKS, W.F. R059
WEISS, F.T. 0613
WELDON, R.A. 0671
WELLS, W.G. 0601
WESTRHEIM, K. 0367
WESTRHEIM, K. 0566
WESTRHEIM, K. 0638
WHELAN, T., III 0504
WHIPPLE, D. 0651
WHIPPLE, J.A. 0522
WHITE, I.C. 0455
WHITE, I.C. 0524
WHITE, J.R. 0357
WHITE, W.W. 0424
WHITTLE, K.J. 0525
WHITTLE, K.J. 0620
WICKSTEN, M.W. 0622
WIEMEYER, S.N. 0484
WILHELMSEN, S. 0367
WILHELMSEN, S. 0566
WILHELMSEN, S. 0638
WILKENSON, P. 0523
WILMAN, E. 0626
WILSON, J.E. R024
WILSON, J.E. 0456
WILSON, K.M. 0403
WILSON, M.P. R025
WILSON, M.P. 0479
WILSON, M.P. 0624
WINZLER/KELLY 0680
WITHAM, R. 0526
WOLFE, D.A. R038
WOLFSON, M.W. 0658
WOLKE, R.E. 0497
WOODRUFF, D.L. 0523
WRIGHT, D.G. 0576
YOCOM, T.G. 0522
YU, Y.S. R015

PATENT INDEX

PATENT	CITATION NO.
US Patent	
4,046,691	0400
4,054,525	0418
4,056,472	0417
4,065,923	0391
4,068,478	0390
4,076,083	0477
4,078,513	0398
4,084,380	0394
4,085,049	0409
4,102,789	0382
4,104,884	0392
4,105,553	0666
4,105,554	0412
4,112,689	0383
4,114,552	0393
4,123,354	0671
4,123,911	0384

APPENDIX A

Periodicals Reviewed

Abstracts on Health Effects of Environmental Pollutants
Alternatives: Perspectives on Society and Environment
Ambio
American Fisheries Society Transactions
Analytical Chemistry
Applied Ecology Abstracts
Applied Energy
Applied Microbiology
Applied Science & Technology Index
Aquatic Sciences & Fisheries Abstracts
Audubon
Australian Science Index
Berichte der Deutschen Wissenschaftlichen Komission fuer Meeresforschung
Bibliography and Index of Geology
Biological Abstracts
Bioresearch Index
Bioscience
British Birds
British Library. Lending Division. Index of Conference Proceedings Received
Bulletin of Environmental Contamination and Toxicology
Bulletin of Marine Science
Catalyst for Environmental Quality
Chemical Abstracts
Chemical and Engineering News
Chemical Engineering
Chemical Engineering Progress
Chemical Week
Chemistry in Canada
Chemosphere
Coastal Engineering
Coastal Zone Management Journal
Conservation News
Current Contents: Life Sciences
Current Contents: Physical and Chemical Sciences
Deep-Sea Research/Oceanographic Bibliography
Ecological Abstracts
Ecological Modelling
The Ecologist
Ecology Law Quarterly
Effluent & Water Treatment Journal
Energy Information Abstracts
Energy Review

The Engineering Index Monthly
Environment
Environment Abstracts
Environment Reporter
Environmental Action
Environmental Conservation
Environmental Geology
Environmental Health and Pollution Control
Environmental Management
Environmental Periodicals Bibliography
Environmental Pollution
Environmental Research
Environmental Science & Technology
Environmental Technology and Economics
EPA Environmental News
EPA Reports Bibliography Quarterly
ERDA Energy Research Abstracts
Estuarine and Coastal Marine Science
Fuel Abstracts and Current Titles
Geochimica et Cosmochimica Acta
Government Reports Announcements
Groundwater
Hydrocarbon Processing
India Journal of Environmental Health
Industrial Wastes Information Bulletin
INTERDOK Directory of Published Proceedings
International Aerospace Abstracts
International Journal of Ecology and Environmental Science
International Journal of Environmental Analytical Chemistry
International Journal of Environmental Studies
International Petroleum Abstracts
Iranian Journal of Science and Technology
The Journal of Applied Ecology
Journal of Canadian Petroleum Technology
Journal of Chromatography
Journal of Environmental Science and Health, Part A
Journal of Environmental Sciences
Journal of the Institute of Water Pollution Control
Journal of Petroleum Technology
Journal of the Fisheries Research Board of Canada
Journal of Toxicology and Environmental Health
Limnology and Oceanography
Marine Biological Association of the United Kingdom, Journal
Marine Biology
Marine Chemistry
Marine Geology
Marine Geotechnology
Marine Policy
Marine Pollution Bulletin
Marine Pollution Research Titles
Marine Science Contents Tables
Marine Technology
Marine Technology Society, Journal
Maritime Research Information Service Abstracts
Microbial Ecology
National Fisherman

National Research Council, News Report
National Wildlife
Nature
New Technical Books
Nippon Susan Gakkai Shi. Bulletin of the Japanese Society of Scientific Fisheries
Northwest and Alaska Fisheries Center Monthly Reports
Ocean Engineering
Ocean Industry
Ocean Management
Oceanic Abstracts
Oceanographic Abstracts and Bibliography
Oceanus
Offshore
Oil and Gas Journal
Oil Spill Intelligence Report
Outdoor California
Pacific Oil World
Petroleum Abstracts
Petroleum Engineer International
Petroleum Today
Pollution Abstracts
Pollution Engineering
Proceedings in Print
Progress in Water Technology
Rapports et Proces Verbaux
Resources
Resource Recovery and Conservation
Royal Society of London, Proceedings, Series B, Biological Sciences
Science
The Sciences
Science News
Science of the Total Environment
Scientific and Technical Aerospace Reports
Scientific Meetings
Sea Frontiers
Sea Secrets
Sea Technology
Selected Water Resources Abstracts
Shore and Beach
Spill Technology Newsletter
Summaries of Foreign Government Environmental Reports
Tanker Advisory Center Newsletter
Technical Book Review Index
Technology Review
Toxicity Bibliography
UDS Water Quality Control Digest
Underwater Information Bulletin
Underwater Naturalist
Waste Materials Biodegradation Research Titles
Water, Air and Soil Pollution
Water & Pollution Control
Water & Wastes Engineering
Water Pollution Control Federation, Journal
Water Research
Western Fisheries

APPENDIX B
OIL POLLUTION ABSTRACTS--AVAILABILITY LISTING

OPA -current title: OIL POLLUTION ABSTRACTS
OPR -former title: OIL POLLUTION REPORTS
OSOPR-former title: OIL SPILL AND OIL POLLUTION REPORTS

TITLE	REPORT PERIOD	EPA ACCESSION NUMBER	NTIS ORDER NUMBER	PRICE	PAGES
OSOPR	Jul 74-Oct 74	EPA 670/2-75-003	PB 240-719	$ 9.25	206
OSOPR	Nov 74-Feb 75	EPA 670/2-75-044	PB 242-542	10.75	261
OSOPR	Feb 75-Apr 75	EPA 670/2-75-059	PB 243-724	9.50	235
OSOPR	May 75-Jul 75	EPA 600/2-76-129	PB 258-852	12.00	315
OSOPR	Aug 75-Oct 75	EPA 600/2-76-113	PB 258-745	11.75	299
OSOPR	Nov 75-Jan 76	EPA 600/2-76-185	PB 257-886	12.50	353
OSOPR	Feb 76-Apr 76	EPA 600/2-76-215	PB 259-932	11.75	308
OSOPR	May 76-Jul 76	EPA 600/2-76-266	PB 264-870	12.50	345
OSOPR	Aug 76-Oct 76	EPA 600/2-77-037	PB 267-266	11.75	307
OSOPR	Nov 76-Jan 77	EPA 600/2-77-075	PB 268-248	11.75	294
OSOPR	Feb 77-Apr 77	EPA 600/2-77-111	PB 272-689	12.50	326
OSOPR	May 77-Jul 77	EPA 600/2-77-243	PB 276-691	13.00	375
OSOPR	Aug 77-Oct 77	EPA 600/2-78-005	PB 281-114	11.00	280
OSOPR	Vol. 5, No. 1 Nov 77-Jan 78	EPA 600/2-78-071	PB 281-671	9.25	190
OPR	Vol. 5, No. 2 Feb 78-May 78	EPA 600/7-78-160	PB 287-071	10.75	242
OPR	Vol. 5, No. 3 Jun 78-Sep 78	EPA 600/7-78-218	PB 290-227	11.75	294
OPR	Vol. 5, No. 4 Oct 78-Dec 78	EPA 600/7-79-040	PB 293-315	9.25	189
OPA	Vol. 6, No. 1 Jan 79-Mar 79	(Submitted 4/79)	PB ___-___	__.__	___
OPA	Vol. 6, No. 2 Apr 79-Jun 79	(Submitted 7/79)	PB ___-___	__.__	___

These documents are available to the public through the National Technical Information Service (NTIS), U.S. Department of Commerce, Springfield, VA 22161, USA. Prices listed include postage and handling fees for North American users. Foreign users should contact NTIS for current price, postage, and handling information. NTIS requests prepayment for each order and will add a $5.00 service fee for each order not accompanied by payment. Telephone orders are accepted at (703) 557-4650.

TECHNICAL REPORT DATA
(Please read Instructions on the reverse before completing)

1. REPORT NO. EPA-600/7-79-254	2.	3. RECIPIENT'S ACCESSION NO.
4. TITLE AND SUBTITLE OIL POLLUTION ABSTRACTS Vol. 6, No. 2 (April 1979 - June 1979)		5. REPORT DATE December 1979 issuing date 6. PERFORMING ORGANIZATION CODE
7. AUTHOR(S) Helmut Ehrenspeck, Barbara Searles, Katherine Osteryoung, & David Bonvouloir		8. PERFORMING ORGANIZATION REPORT NO.
9. PERFORMING ORGANIZATION NAME AND ADDRESS MARINE SCIENCE INSTITUTE University of California Santa Barbara, California 93106		10. PROGRAM ELEMENT NO. 1NE623 11. CONTRACT/GRANT NO. R805803
12. SPONSORING AGENCY NAME AND ADDRESS Industrial Environmental Research Lab.-Cincinnati Office of Research & Development U.S. Environmental Protection Agency Cincinnati, Ohio 45268		13. TYPE OF REPORT AND PERIOD COVERED Quarterly, April 79-June 79 14. SPONSORING AGENCY CODE EPA/600/12

15. SUPPLEMENTARY NOTES

16. ABSTRACT

OIL POLLUTION ABSTRACTS (formerly entitled OIL POLLUTION REPORTS) is a quarterly compilation of current literature and research project summaries. Comprehensive coverage of oil pollution and its prevention and control is provided, with emphasis on the aquatic environment. This issue contains bibliographic citations with abstracts of scientific and technical publications and patents covering the years 1976 to 1979. The literature and research entries are arranged in eight major categories comprised of thirty-seven specific sub-categories. A permuted Subject Keyword Index provides access to every entry, and author and patent indexes are included. This report is submitted in partial fulfillment of EPA Grant No. R-805803-01 by the Marine Science Institute, University of California, Santa Barbara, under the sponsorship of the U.S. Environmental Protection Agency.

17. KEY WORDS AND DOCUMENT ANALYSIS

a. DESCRIPTORS	b. IDENTIFIERS/OPEN ENDED TERMS	c. COSATI Field/Group
Abstracts Bibliographies Research Patents Subject indexes	Oil pollution Oil spill events Oil spill research Oil pollution control Oil pollution patents	13B

18. DISTRIBUTION STATEMENT RELEASE TO PUBLIC	19. SECURITY CLASS (This Report) UNCLASSIFIED 20. SECURITY CLASS (This page) UNCLASSIFIED	21. NO. OF PAGES 281 22. PRICE

EPA Form 2220-1 (9-73)

☆ U S GOVERNMENT PRINTING OFFICE 1980-657-146/5522